QC
879.25
B4

73040505

FR-1110-102

FINAL REPORT

TIROS OPERATIONAL VERTICAL SOUNDER - BASIC SOUNDER UNIT

Subtask: Scanner Mechanism Design and Test Report

Purchase Order No. 01884

February 9, 1973

Prepared for:

Gulton Industries, Inc.
Data Systems Division
Albuquerque, N.M.

Beckman® INSTRUMENTS, INC.
ADVANCED TECHNOLOGY OPERATIONS
ANAHEIM, CALIFORNIA 92806

A
QC
879.25
B4

FINAL REPORT

TIROS OPERATIONAL VERTICAL SOUNDER - BASIC SOUNDER UNIT

Subtask: Scanner Mechanism Design and Test Report

Purchase Order No. 01884

February 9, 1973

ATMOSPHERIC SCIENCES
LIBRARY
MAY 7
~~JUN 12~~ 1975
N.O.A.A.
U. S. Dept. of Commerce

Prepared for:

Gulton Industries, Inc.
Data Systems Division
Albuquerque, N. M.

Beckman® INSTRUMENTS, INC.
ADVANCED TECHNOLOGY OPERATIONS
ANAHEIM, CALIFORNIA 92806

75-1362

National Oceanic and Atmospheric Administration
TIROS Satellites and Satellite Meteorology

ERRATA NOTICE

One or more conditions of the original document may affect the quality of the image, such as:

Discolored pages
Faded or light ink
Binding intrudes into the text

This has been a co-operative project between the NOAA Central Library and the Climate Database Modernization Program, National Climate Data Center (NCDC). To view the original document contact the NOAA Central Library in Silver Spring, MD at (301) 713-2607 x124 or Library.Reference@noaa.gov.

HOV Services
Imaging Contractor
12200 Kiln Court
Beltsville, MD 20704-1387
January 26, 2009

Beckman® INSTRUMENTS, INC.
ADVANCED TECHNOLOGY OPERATIONS
2500 HARBOR BOULEVARD, FULLERTON, CALIFORNIA • 92634
(714) 871-4848; TWX: 714-871-1790 • TELEX: 06-70813

Document No. FR 1110-102
Rev 1 Rev Date 28 Feb. 1973

TITLE: TIROS OPERATIONAL VERTICAL SOUNDER - BASIC SOUNDER UNIT
Subtask: Scanner Mechanism Design and Test Report

ERRATA

Prepared For: Gulton Industries, Inc.
Data Systems Division
Albuquerque, N. M.

Prepared by: _____ Originator	Date	Approved by: _____ Contract Admin.	Date 3/2/73
Approved by: _____ Project Engineer	Date	Approved by: _____	Date
Approved by: J.Q. Maley Program Manager	Date 3/2/73	Approved by: _____	Date
Approved by: B.J. Brown Data Manager	Date 2/28/73	Approved by: _____	Date

FOREWORD

This report is the result of a scanner mechanical design study for the TIROS-N Operational Vertical Sounder-Basic Sounder Unit, an operational satellite radiometer that will measure atmospheric temperature and moisture profiles from earth orbit. The study was conducted by Beckman Instruments, Incorporated, Advanced Technology Operations, for Gulton Industries, Incorporated, Data Systems Division, which was under contract to the National Oceanic and Atmospheric Agency, National Environmental Satellite Service. The scanner task was one part of an overall optical, radiometric, mechanical, thermal, and electronic design study of the sounder instrument.

CONTENTS

SECTION 1 - SUMMARY 1-0
SECTION 2 - COMPARISON OF SCAN DRIVE MECHANISMS 2-0
SECTION 3 - SCAN MECHANISM DESIGN ANALYSIS 3-0
SECTION 4 - DESIGN VERIFICATION 4-0
SECTION 5 - SCANNER MECHANICAL DESIGN 5-0
SECTION 6 - DRIVE CIRCUIT DESIGN 6-0
SECTION 7 - PRODUCT ASSURANCE 7-0
SECTION 8 - CONCLUSIONS 8-0

APPENDIX A TOVS-BSU FMECA WORKSHEETS
APPENDIX B TOVS-BSU COMPONENT SPECIFICATIONS

SECTION 1
SUMMARY

Review of Objectives and Requirments for the Scanner Design and Test Program 1-0
Impact of Scan Sequence of Scanner Design 1-2
Summary of Flight Scanner Design Features 1-4
Summary of Scanner Breadboard Testing 1-6
Discussion of ITPR Scanner Performance 1-8

REVIEW OF OBJECTIVES AND REQUIREMENTS FOR THE SCANNER DESIGN AND TEST PROGRAM

A scan mechanism design and test program was conducted as part of the Basic Sounder Unit (BSU) instrument study with the objective of establishing a scanner design that is compatible with the BSU instrument and that meets performance specifications. Following the design selection, a laboratory mockup of the scanner (including electronics) was built and tested.

The BSU is part of the TIROS Operational Vertical Sounder (TOVS), an instrument system that will be flown on the TIROS-N spacecraft. TOVS, in turn, is part of an operational meteorological data gathering system that has a performance requirement of two years. As a consequence of the operational lifetime, as well as the instrument mission, the scanner subsystem must meet the requirements listed in the table on the facing page, with respect to performance, physical characteristics, and environmental factors. This topic discusses those overall requirements and the major considerations in meeting them.

The scanner performance requirements were derived from the given parameters of the scan program and from the mirror characteristics. The scan mirror, which is designed for accurate manufacture and optical stability, has certain physical characteristics. However, for the purpose of the scanner design, the only characteristic necessary to consider is the moment of inertia, since it is this feature of the mirror that affects scanner performance. The other scanner performance requirements resulted from the scan program study; they represent scanner output functions which must be achieved.

The physical characteristics of the scanner subassembly are impacted most by space, weight, and power requirements implied by the BSU instrument system design. The environmental requirements are derived from the testing and service stresses which the BSU instrument will experience.

Although all requirements are important and affect successful scanner performance, it is specified performance which has the greatest impact upon design feasibility. Accordingly, it was the performance requirements which primarily were addressed by the scanner study. This emphasis also determined that it was more important to simulate scanner dynamics rather than be an exact copy of flight hardware.

Hardware requirements were also addressed by the study. Of significance to the hardware design was the experience gained from building, testing, and flying the ITPR instrument, which had many requirements similar to those of the BSU. Accordingly, the design phase of the scanner study was an opportunity to optimize scanner subsystem hardware based upon ITPR experience, and to define requirements for scanner components.

Details of the scanner design are provided in Section 3 of this report. Section 4 describes tests of the scanner breadboard. Component selection and flight system design are discussed in Sections 5 and 6, respectively.

SCANNER REQUIREMENTS

The step, dwell, and retrace requirements are extremely critical.

Performance

• Inertia Load	25.2 gm cm^2 at motor
• Step Angle and Accuracy	1.125° ±0.1°
• Step and Settle Time	50 ms
• Retrace Speed	100 steps/s
• Angular Range	360°

Physical Characteristics

• Space Envelope	11.25 in. dia x 15 in. long
• Weight	2.5 lb*
• Drive Power	8 W*

Environmental

• Operating Temperature Range	-25°C to +70°C
• Acceleration	22 g
• Vibration	5 - 2000 Hz Sine, 10 g all axis 20- 2000 Hz Random, 20 g runs

---

* Design Goals

IMPACT OF SCAN SEQUENCE ON SCANNER DESIGN

The TOVS instrument scanning sequence is the single most important factor affecting the design of the scanner. To cover the desired field, the scanner must perform rapid stepping under fixed control, with fixed timing. The time allotted for scene viewing affects the remaining time available for stepping and settling, and thus impacts scanner dynamics.

The scanning program has three distinct phases: step-dwell, retrace, and calibrate. The timing of each of these functions is shown in the figure. One step-dwell cycle is of 100 ms duration, and consists of a dwell period of 75 ms followed by a step-and-settle period of 37.5 ms *. The chopper function is shown to the same time base to illustrate the synchronization of scanning, chopping, and signal integration. One integration period consists of three scene chops and three reference chops. The step is initiated during a chopper reference phase when the scene is blocked, so the amount of data lost during scanner stepping is minimized.

A scan line consists of 72 scenes viewed serially. This requires 72 scanner steps, or 7.2 s at 100 ms/step. An additional 800 ms is allowed for retracing, bringing the total allotted time for one scan line to 8.0 s. Since the scanner drive input for retracing is 100 pps, the 72-step interval is actually retraced in only 72 ms, leaving an 8-ms cushion before the next scan line is begun.

The third illustration in the figure shows the scanner sequencing for a complete data grid of 32 scan lines as well as how the calibration functions fit into the scan program. Calibration, which is performed at the end of each scan grid, consists of a space look and a housing blackbody look. The space look, in terms of scanner rotational angle, is 70 degrees above nadir; the housing blackbody look is 180 degrees above nadir.

The specified scan sequence imposes two demands on the scanner design: stepping and settling, and slewing. Of the 100 ms for each data frame, only 37.5 are available for stepping and settling, which impacts the torque and damping of the scan drive motor. Slewing involves the retrace and the movement to calibration positions. The requirement is that a 100-pps input to the scanner must be followed without error so that the commanded positions will be reached in time, which impacts the motor slew rate of the loaded motor.

The step-and-settle requirement affects the choice of three system parameters: motor output torque, system inertia, and damping. The torque must be sufficiently high to get the motor rotor and connected inertias out of its detented position quickly. Stepping and settling together must consume no more than 37.5 ms.

The system slewing rate must be high enough to allow movement between the commanded positions in the times shown in the sequencing diagram. The required output slew rate is 100 steps of 1.125 degrees/s, or an angular rate of 1.96 rad/s This affects the stepper motor parameter of no-load speed, or step rate and also impacts the motor's detent torque, since high detent torque tends to lower the no-load step rate. Balancing of these two parameters to achieve adequate speed while keeping good damping is one of the tradeoffs that must occur in the motor design process.

* The system design shows that it is desirable that the scanner step and settle in 37.5 ms. This value appears to be attainable, but the baseline mechanical design subjected to breadboard testing was based on a 50-ms step-and-settle interval.

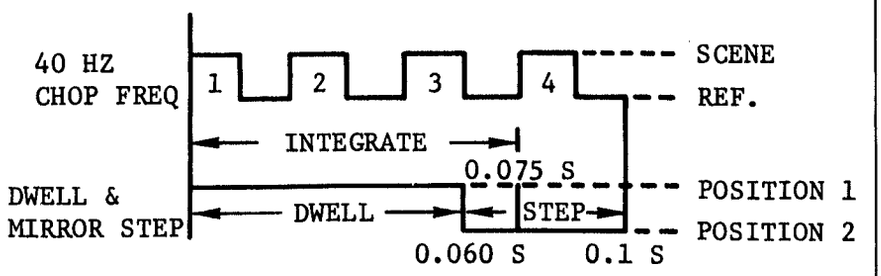

STEP TIMING

SCANNER AND CHOPPER ARE SYNCHROMIZED. NOTE THAT STEPPING OCCURS DURING CHOPPER REFERENCE PHASE.

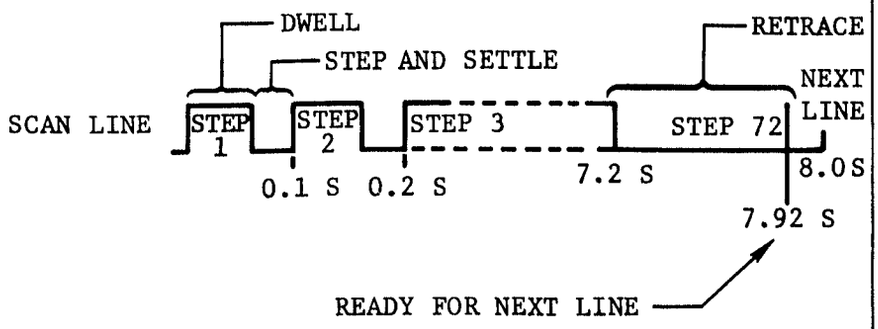

TYPICAL SCAN LINE

CONSISTS OF 72 DWELL PERIODS FOLLOWED BY RAPID RETRACE.

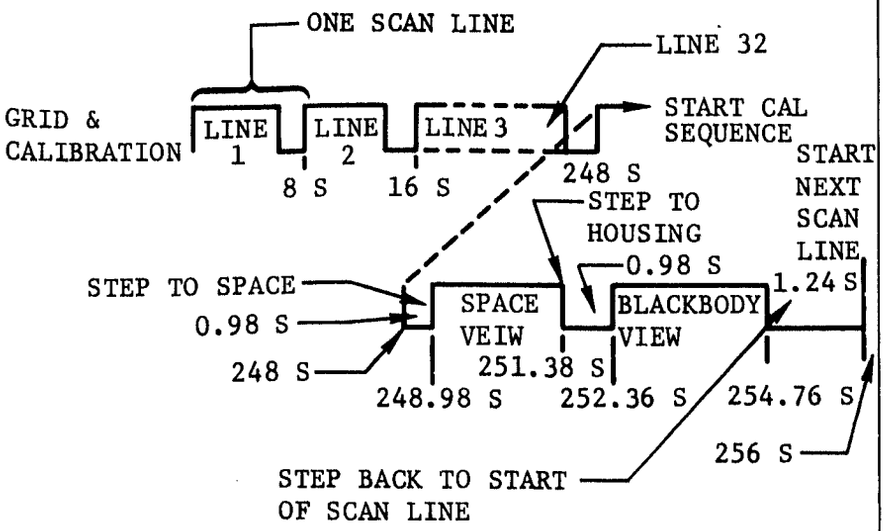

SCAN GRID AND CALIBRATION SEQUENCING

ONCE EVERY 31 SCAN LINES (EVERY 248 S). A LINE IS SKIPPED TO PERMIT SPACE AND HOUSING CALIBRATIONS.

TOVS SCAN AND CALIBRATION SEQUENCING. A 75-MS INTEGRATION PERIOD PERMITS THE USE OF THREE CHOPS PER SCENE, INCREASING THE INSTRUMENT SIGNAL-TO-NOISE RATIO. THE STEPPING AND SETTLING REQUIRED IMPACTS THE SCANNER DYNAMICS.

SUMMARY OF FLIGHT SCANNER DESIGN FEATURES

The TOVS-BSU scanner design is a simple, straightforward configuration that meets the performance objectives. It is similar to the ITPR design, but has been improved to avoid assembly problems, and to provide better thermal stability and increased life.

The scanner, a major functional part of the BSU instrument, is constructed as a self-contained, separately checkable subassembly. In addition to being designed to the demanding parameters of the BSU application, the scanner is configured to ensure ease of producibility and the high reliability needed for an operational instrument.

The major design features of the in-line scanner assembly are shown in Table I. Since the instrument performs a stepped scan, a stepper motor was chosen as the source of motive power. Because of its simplicity, low wear rate, light weight, and extremely accurate transmission of motion, a harmonic drive was selected as the speed reducing element of the mechanism. The encoder is a seven-track pin contact type. It is similar to that used in the ITPR instrument, but major improvements have been incorporated. The main structure of the subassembly is aluminum. The scan mirror shaft is supported on pre-loaded ball bearings whose larger size and increased number reflect the greater size of the BSU scan mirror.

The BSU is similar in concept to the ITPR instrument. Some features and arrangements of features carry over directly, but the practical design of the instrument and of the scanner subsystem is impacted by the increased speed, coverage, and life requirements of the BSU.

A number of features in the BSU scanner represent significant design improvements over the techniques used in the ITPR. Some specific details are shown in Table II. The design of the drive motor is changed to incorporate a large flange on its front end, eliminating a joint that existed previously and allowing greatly improved concentricity between motor and harmonic drive, which improves the accuracy and smoothness of motor transmission. The non-metallic motor mount that was used for ITPR has been eliminated to improve the rigidity of the motor mounting and to conduct heat directly to the instrument housing. The increased scanner dynamical performance required that inertias at the motor shaft be reduced by changing the harmonic drive to a low inertia design.

The design improvement most significant for checkout and assembly is the use of a unitized shaft encoder. This device was changed from the ITPR design so that it is pre-assembled before being placed in the scanner assembly, which allows the unit to be checked out and shipped by the manufacturer as an assembled unit. Reliability is greatly enhanced and assembly problems that existed with the ITPR are completely absent. The method of wiring the encoder also was changed, to incorporate a connector. This again is a great improvement over the hard wiring used on the ITPR encoder. Both the scan mirror and the encoder are indexed to the main shaft by means of precision Woodruff keys, allowing easy phasing of encoder to mirror at initial assembly. Finally, the method of mounting the main shaft bearings was changed. To avoid any possible thermal problems which might occur with the pre-loaded bearings, a monometallic bearing mount was designed. This involves a stainless steel sleeve pressed into the aluminum scanner housing. The gradual loosening of the bearing outer races in their bores that is sometimes encountered cannot happen with this design.

The design generated by the scanner study was based on both past experience and analysis. To prove out the key design features of the scanner, particularly as regards scanner dynamics, a laboratory breadboard model was constructed and tested.

TABLE I. MAJOR DESIGN FEATURES

• Assembly	-In-line
• Motor	-90-degree PM Stepper
• Reduction Drive	-Size 1C Harmonic Drive
• Encoder	-Pin Contact, 7-track
• Structure	-Aluminum for Thermal Conduction
• Bearings	-Tandem Pair Front Single Rear - preloaded

TABLE II. IMPROVEMENTS IN BSU OVER ITPR INSTRUMENT

The TOVS-BSU scanner design incorporates improvements based on problems encountered in the ITPR assembly.

• Drive Motor Mounting	- Integral mounting flange for improved concentricity
• Harmonic Drive	- Low-inertia wave generator
• Encoder Design	- Pre-assembled
• Bearing Mounting	- Monometallic Design
• Encoder Wiring	- Connector
• Mirror-Encoder Alignment	- Keyway
• Motor Thermal Circuit	

SUMMARY OF SCANNER BREADBOARD TESTING

The BSU scanner breadboard was constructed to investigate the dynamics of the selected scanner. The scanner mockup tests demonstrated that the scan assembly is capable of meeting operational flight performance, and confirmed the performance analysis (see Section 3).

Construction and testing of a laboratory mockup scanner device (scanner breadboard) was required as part of the TOVS-BSU design study. The objectives of the breadboard testing were to demonstrate system transient response, simulating dynamically important scanner characteristics such as inertias, motor torque, and system damping. Another objective was to verify scanner system power requirements and to define the optimum scanner drive circuit and drive waveform.

The scanner mockup consisted of a size-15 motor having the approximate performance characteristics required, a standard harmonic drive unit of the proper size (although with different ratio), a balanced mass to simulate mirror inertia, and a resolver to permit readout of output shaft position. The drive circuit used was a breadboard version of the flight drive circuit design. Mode of operation of the driver circuit was single phase, with full winding excitation at 28 V. Details of the scanner breadboard hardware and drive circuit are presented in a later section.

A comparison of the test performance versus the calculated response is shown in the table. The acceleration, velocity gradient, and crossover compare very well. The peak amplitude and damped response differ and can be attributed to the difference in the time period that power is applied to the motor. The math model assumes power applied continuously. The mockup test was run with power applied only during the first 10 ms.

A recording of an isolated step dwell period during the scan sequence is shown in the figure. Power was applied only for the first 10 ms. The damped response is attributed only to the magnetic detent and viscous damping of the motor and wave generator bearings. This test data was from the latest drive modification, which incorporated a double eccentric wave generator rather than the standard elliptical bearing configuration. Earlier tests with the standard wave generator resulted in a severely underdamped response with out-of-band overshoots occurring well beyond 50 ms. The high inertia load also limited retrace rate to 85 pps.

Design verification by actual test, as was done with the BSU scanner breadboard reinforces the confidence resulting from a rigorous design analysis. Potential problem areas as well as areas where further improvement may be achieved are spotlighted, and the detail design approach that must be taken to insure good quality and manufacturing characteristics is made more clear.

CALCULATED DATA VS. TEST DATA FOR SCANNER MOCKUP

	Calculated	Test Data
Velocity Gradient	117	100
First Crossover	17 ms	27 ms
Peak Amplitude	1.9 rad	1.78 rad
Damping Ratio	0.6	0.8
Settling Time	40 ms	50 ms

1110-102-16

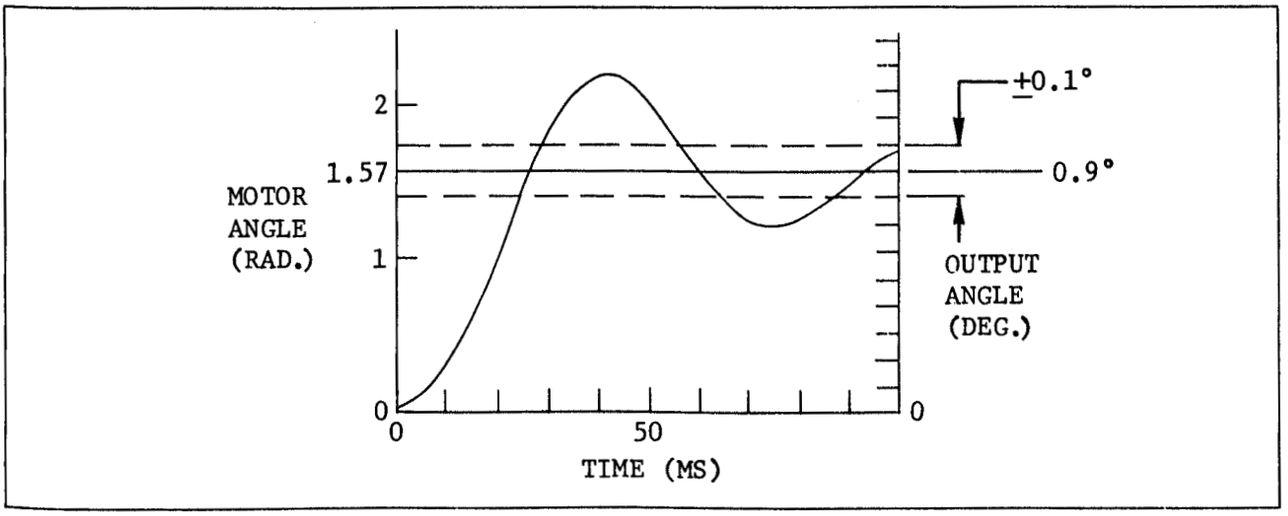

FIGURE A. RESPONSE OF MOCK-UP SCANNER WITH STANDARD WAVE GENERATOR

1110-102-17

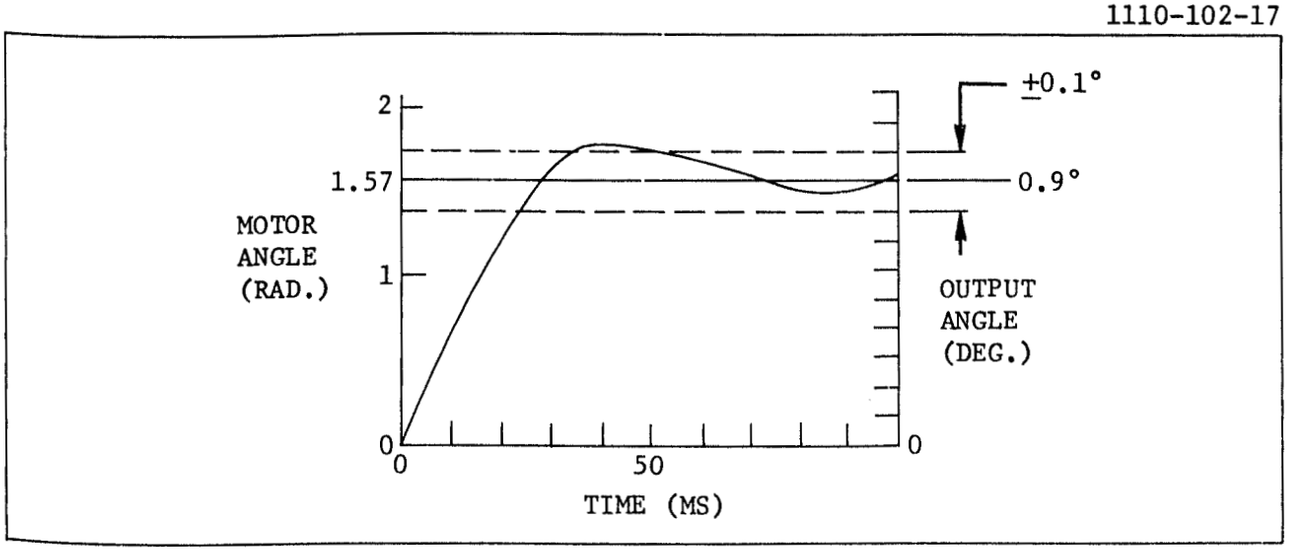

FIGURE B. RESPONSE OF MOCK-UP SCANNER WITH LOW-INERTIA WAVE GENERATOR

DISCUSSION OF ITPR SCANNER PERFORMANCE

Present understanding of the failures that have been experienced with the ITPR scanner does not appear to invalidate the similar TOVS-BSU scanner design. The failures appear to have been caused by reduced motor torque and lubricant degradation rather than by a basic design flaw, and both of these conditions can be prevented by improving motor and lubricant manufacturing controls.

The scan mechanism in the Infrared Temperature Profile Radiometer (ITPR) on NIMBUS-5 is very similar in design to that recommended for the TOVS-BSU. It met the somewhat less demanding transient response and retrace requirements for ITPR and was extensively tested in engineering model, prototype, and flight unit tests prior to spacecraft integration.

The scanner on the ITPR flight unit for NIMBUS-5 malfunctioned in thermal-vacuum testing, failing to follow the commanded sequence reliably. Disassembly of the scanner failed to show any obvious mechanical failure or source of increased toraue load, although there was some evidence of wear and a glassy particle was found in the harmonic drive lubricant, but at an uncritical location. Motor torque was lower than nominal. The failure was attributed primarily to low temperatures which increased lubricant viscosity, although the scanner was overheated during testing.

The prototype instrument was then successfully tested in thermal vacuum, integrated with the spacecraft, and launched in December 1972. After several weeks of successful operation of the entire instrument, the scanner again began to behave erratically, as the other unit had done. Later it was found that the instrument could be turned back on, and that the scanner would operate normally; but, after a period of time, the erratic operation would again occur. This behavior pattern has been moreor less constant. There is no obvious correlation between erratic behavior and operating temperature, although the scanner temperature has exceeded the qualification limit of 45°C.

Investigation of these failures is in progress, and the investigation is not complete. So far, the results of the investigation are as follows:

- Mechanical and structural analysis conducted during the TOVS scanner design effort has not disclosed any source of bearing failure, excessive drive wear, or other fundamental mechanical design flaw.
- Glassy particles have been found, not only in the harmonic drive, but recently also were found in the unused G-300 grease used to lubricate the motor. These particles were found deep in the squeeze tube and were evidently either in the grease when delivered or were the result of aging that occurred since the motor was greased.
- The grease used to lubricate the harmonic drive was purchased separately by the drive supplier.
- The tendency to form such particles is a known property of some silicone greases.
- The permanent magnet motors were operated above the 45°C qualification temperature. Conceivably, demagnetization could have resulted from repeated thermal cycling. The motor involved in the first failure was sent to the supplier, who found it to be partially demagnetized.
- The motor supplier did not test the motor with the single-phase drive circuit used in the instrument but rather used a two-phase circuit which provided more torque. The torque becomes marginal when a single-phase drive is used.

At this point in the investigation, it appears that the failure was caused by improper testing and inadequate screening of the motors, which allowed use of motors of marginal torque capability. This problem may have been aggravated by contamination of the grease and overheating of the motors. To prevent recurrence it is evidently necessary to increase the controls used in procurement of scan drive components, a precaution which would be taken in any case for an operational instrument.

A number of improvements have been made in the TOVS scanner design to facilitate assembly and testing and to provide greater performance margins. The ITPR encoder was of separable design--one part was affixed to the output shaft and the other to the scanner drive housing. Because of the encoder location, the assembly was blind and verification of proper assembly was difficult. Encoder wiring was also difficult in that there was hard wiring to the pin cage, and it was possible to over-strain the cable. The TOVS encoder is a unitized, pre-assembled design and has its own electrical connector, thus avoiding these problems. A potential problem was noted with the ITPR mirror shaft bearings, which were mounted directly into the aluminum of the scanner housing. This has been fixed in the TOVS scanner by adding a pressed-in stainless steel sleeve into which the bearings are seated. The immediate area of the bearing mounting is thus monometallic and differential thermal expansion problems are avoided. The bearing size has been increased because of the greater mass of the TOVS scan mirror. The use of different lubricants is being considered.

In addition to the above improvements, the following steps should be taken with the TOVS scanner to assure reliability in orbit: motor qualification to higher temperatures, improved materials and process controls, and improved implementation of supplier reliability and quality programs to assure adequate screening and acceptance testing of motors, drives, and other devices.

IMPROVEMENTS IN BSU SCANNER DESIGN AND MANUFACTURE

These improvements are a direct result of ITPR experience.

- Motor is heat-sunk to instrument housing.
- Encoder is a unitized assembly.
- Use of connectors.
- Monometallic shaft bearing design.
- Increased manufacturing controls.
- Use of more reliable lubricants.

SECTION 2
COMPARISON OF SCAN DRIVE MECHANISMS

Analysis of Scan Drive Mechanism Requirements 2-0
Summary of Drive Mechanism Comparison 2-2
Description of Harmonic Drive 2-4
Description of Gear Train 2-6
Description of Direct Servo 2-8
Analysis of the Direct Drive Servo 2-10

ANALYSIS OF SCAN DRIVE MECHANISM REQUIREMENTS

Analysis of the speed, accuracy, and weight requirements for the BSU showed that only a few alternative designs are suitable.

The primary requirements of the scan drive are response time, accuracy, and ability to operate for two years in orbit. The scanner operates in two modes: step-dwell, and retrace. The requirements are intended to ensure that operation is satisfactory in both modes. The life requirement, of course, is vital to instrument success.

The necessary motor torque and speed characteristics can be derived from the response-time requirements. The mechanism design analysis (Section 3 of this report) shows that there are two torque conditions to be met: the motor peak torque must be at least 8 oz-in., and the average or running torque at 100 pps must be 2.6 oz-in. minimum.

The detailed dynamic analysis also defined the necessary system damping. The step-dwell transient response should be slightly underdamped to achieve a minimum response time and to reduce losses which would increase torque requirements during retrace if the motor were critically damped. The detailed analysis of Section 3 shows that a damping factor of 0.4 to 0.6 is needed.

The accuracy requirement relates to the step-dwell mode of operation. The accuracy of the instrument's look angle is determined directly by how accurately the scanner steps. The overall pointing accuracy requirement for the instrument is 0.1 degree, which also means a scanner positioning accuracy of 0.1 degree, as there is no optical doubling in the scanner. If half of this total allowable system error is allotted to the scanner, the required output shaft positioning accuracy would be 0.05 degree. For an 80:1 speed-reduced system, the accuracy requirement at the motor shaft then would be decreased to 4 degrees; and, similarly, for other speed reduction ratios. Positioning accuracy required of a direct-drive system would still be 0.05 degree.

The life requirement is a fundamental part of the operational instrument specification. If it is assumed that one BSU has to operate continuously for the entire two-year period, the scanner output shaft will experience an equivalent of 4×10^6 revolutions total. Geared-up parts of the system would experience correspondingly higher total revolutions; thus, for the case of an 80:1 speed-reduced system, motor total revolutions would be 3×10^8 revolutions.

Several systems which could meet the requirements are listed in Table II on the facing page. First is a 90-degree stepper motor with 80:1 harmonic-drive speed reduction. The next system--the Responyn--is a variation of the harmonic drive principle wherein the rotating wave generator is replaced by the rotating magnetic field, and there is no physical high-speed shaft. The Responsyn is also a stepper. The third alternative is a stepper motor driving through conventional gears rather than the harmonic drive. Finally, the direct drive servo referred to would be a "pancake" type dc torque motor directly coupled to the scanner output shaft. It would have both rate and position feedback.

The following sections of this report will examine the alternative designs discussed above in detail.

TABLE I. SCAN DRIVE MECHANISM REQUIREMENTS

The derived requirements were established and taken as firm constraints on design.

SPECIFIED REQUIREMENTS	DERIVED REQUIREMENTS
Response Time	
• Step and settle in 1.125 degrees in 0.04 s	- Peak Motor Torque = 8 oz-in. - Avg Motor Torque = 2.6 oz-in. at 100 pps - Damping Ratio = 0.4 - 0.6
Accuracy	
• Each step +0.05 degree	
Repeatability	
• Start each successive scan line at same point ±0.05 degree	
Life	
• 2 years, + 2000-hr testing	- 3×10^8 revs at input shaft
Power	
• Less than 10 W average	- 30 W peak
Weight	
• Minimum possible, consistent with weight budget	- 2.5 lb

TABLE II. CANDIDATE SYSTEMS

Each system is analyzed in Section 3 and a selection is made

• Stepper Motor - Harmonic Drive	- Accuracy easily met; select system parameters to meet response time requirements
• Responsyn	- Equals performance of stepper/harmonic drive, but has no holding torque
• Stepper Motor - Gear Drive	- Difficult to meet accuracy requirements. Dynamics about same as those above
• Direct Drive Servo	- Mechanically simple, but heavy. Much system complexity to meet accuracy requirement

SUMMARY OF DRIVE MECHANISM COMPARISON

The stepper motor-harmonic drive design was selected for the scanner of its simplicity, low backlash, low weight, low wear, low stress factors, and power-off holding torque.

Several candidate designs for the TOVS-BSU scanner were compared to select the best design. The candidates were: a permanent magnet stepper-harmonic drive combination, a stepper driving through conventional gears, a direct-driving dc torquer type motor with feedback, and the "Responsyn" device, which also incorporates a harmonic drive.

Several selection criteria were used. Foremost was accuracy, since this is vital to instrument success. Both output accuracy and backlash were tabulated. System complexity is indicated by feedback requirements, electronic complexity, ball bearing count, and total electromechanical or mechanical device count. The best indicator of expected life is the stress on the mechanism; this was tabulated as contact stress in the speed reduction elements. Also examined were weight, whether or not application of electrical power was necessary to achieve holding torque, and potential lubrication problems.

Since each design can be made to achieve the desired characteristics, selection is based primarily on maximum reliability and maintenance of specified performance after two years in orbit. Quantification of these considerations was accomplished by weighting the selection criteria. Then, when the candidate designs were ranked, they could be "scored" by multiplying rank figures and weighted values of the criteria. The resultant figures are shown in the table on the facing page.

The geared stepper motor design has a number of drawbacks. The most serious one is questionable life due to the high Hertzian contact stresses in the gear teeth. This is a problem inherent in involute gearing which cannot be avoided in weight-optimized systems. Lubrication, too, promised to be a problem--the backlash requirement would dictate such a tight mesh that there would be no room for the copious lubricant films needed for good gear life. The gear drive was therefore disqualified.

There are three primary disadvantages to the direct drive, closed loop motor: excessive weight, system complexity, and high power consumption because of the control electronics required. The projected weight of this system was three to five times the projected weight of the other candidates; and there would be the need for an auxiliary angular rate feedback device to close the loop--a device not required by any of the other systems. Power must be kept on at all times to keep the servo loop locked. The direct drive system does, of course, offer mechanical simplicity; hence the need to consider it.

The Responsyn drive is basically a harmonic drive and stepper motor integrated into one device. Thereis no mechanical element to deform the flexible member; instead, this is accomplished by the rotating magnetic field of the electrical stator. The device is attractive for the same reasons that recommend the stepper-harmonic drive combination. However, it has one fault: there is no physical contact between the flexspline and its mating member except in the presence of electrical excitation, so that there is no power-off holding torque. In fact, this device would require continuous application of power, and this high power requirement is sufficient to disqualify this drive.

The remaining design--the combination of stepper motor and harmonic drive speed reducer--was the one selected. This system offers the best combination of performance, low weight and power, and favorable life factors. This subjective evaluation is reinforced by the "score" figures resulting from the numerical tradeoff exercise detailed in the table.

COMPARISON OF SCAN DRIVE CANDIDATE MECHANISMS

Only the open loop stepper-harmonic drive meets design objectives with acceptable weight, power, and projected life.

Criteria	Stepper Motor/ Harmonic Drive	Rank	Stepper Motor/Gear Train	Rank	Direct Drive w/Feedback	Rank	Responsyn	Rank	Relative Importance of Criteria
Accuracy	0.1 degree	4	0.1 degree	1	0.1 degree	2	0.1 degree	3	3
Electronic Complexity	low	4	low	4	high	1	low	4	3
Feedback requirements for 0.05 degree resolution	none used	4	none used	4	required	1	none used	4	2
Backlash	2 min	3	6 min	1	0	4	2 min	2	3
Total bearings required	8	2	10	1	5	4	5	3	1
Holding Power required	No	4	No	4	Yes	1	Yes	1	3
Weight*	2.5 lb	4	3.5 lb	3	8-10 lb	1	3.5 lb	3	2
Contact Stress	2,000 psi	3	30,000 psi	1	0	4	2,000 psi	3	3
Device Count	4	2	5	1	4	3	3		1
Potential Lubrication Problems	Minor	3	Severe	1	Minor	4	Minor		3
Total "Score"**	83	—	52	—	59	—	69	—	—

*Not including scan mirror
**Rank X Relative Importance

BECKMAN INSTRUMENTS, INC.
Advanced Technology Operations
J. C. Hammond

DESCRIPTION OF HARMONIC DRIVE

The harmonic drive is an aerospace proven power transmission device that uses the elastic properties of metals to effect a differential motion between engaging members and thus achieve a high velocity ratio. Its outstanding features are great torsional rigidity, and the ability to achieve a very high speed ratio without intermediate shafts.

Harmonic Drive - The harmonic drive, of 10 years ago by the USM Corporation, has been engineered for both industrial and aerospace/military applications, such as missiles, satellites, the Apollo Lunar Rover, and others. It is available in stock designs in a wide range of sizes.

An illustration of the harmonic drive principle is shown in Figure A. It consists of three primary elements: a flexible spline which appears as a normal gear, a circular spline which is similar to an internal gear, and a wave generator. The flexible spline is deflected by the wave generator into an elliptical shape and contacts the circular spline in two areas. Rotation of the wave generator causes the major axis of the ellipse to rotate. The resultant progressive meshing of flex spline and circular spline teeth leads to differential action, because of the differing tooth numbers. A slow rotation of the flex spline--that output member-- results. The direction of rotation is opposite to that of the wave generator.

The outward action of this assembly is identical to that of a differential epicyclic gear train. However, the harmonic drive's load carrying capacity is greater than for a conventional gear train because the load is carried at two opposite areas in the spline mesh andis distributed over a number of spline teeth at each area of contact. Unlike a gear which uses an involute profile resulting in rolling contact--which is necessary because of the relative motion between the mating teeth--the harmonic drive has essentially zero velocity at the point of contact. Therefore, where gear teeth have rolling action which is essentially line contact, harmonic drive teeth have area contact.

Because of the lower contact stresses and near-zero relative velocity between the flex spline and the circular spline (it is estimated that only a maximum of two percent slip occurs between the two members under full load), a more optimum lubrication system than for other drives is feasible. The circular spline can be gold plated to provide a low-stress shear surface, and the mating teeth can be coated with a vacuum grease. A reservoir can be located adjacent to the gear mesh, assuring molecular flow across the meshing splines, support bearings, and out to the labyrinth seals.

Another advantage of the harmonic drive is that, since the flexible spline can be a non-rotating element, the stepper motor and wave generator can be packaged as a hermetically sealed unit, offering improved bearing life as a result of optimum lubrication techniques. This unique feature has been exploited in a number of applications.

One of the limitations of the harmonic drive is the tendency to seek a preferential position of the flexible spline. Due to residual stresses and grain orientation, the flexible spline tends to seek an elliptical position at a fixed angular location. Therefore, when the drive is stopped at some other position, there is a tendency to spring back. Since a permanent-magnet stepper motor is being used, the motor restoring forces will oppose the torque generated by the flexible spline. This torque input is a measurable value and is included in the harmonic drive specification to assure that the position accuracy is well within the allotted tolerance band. Typically, the maximum preferential positioning torque is 0.3 oz-in. or less.

An application of the harmonic drive to the BSU scanner is described in detail in Section 3.

Responsyn - Another harmonic drive device considered in the scan drive comparison was the Responsyn. This device is a variation of the basic harmonic drive, and is also made by the USM Corporation. It incorporates the harmonic drive into a stepper motor. The mechanical wave generator is replaced by a rotating magnetic field which flexes the internal spline. This greatly simplifies the assembly and provides a minimum weight actuator as well as the highest response and damping characteristics. The Responsyn, however, requires power to retain position, and the driving power and average holding power combined are excessive and exceed the allotted power budget.

1110-102-7

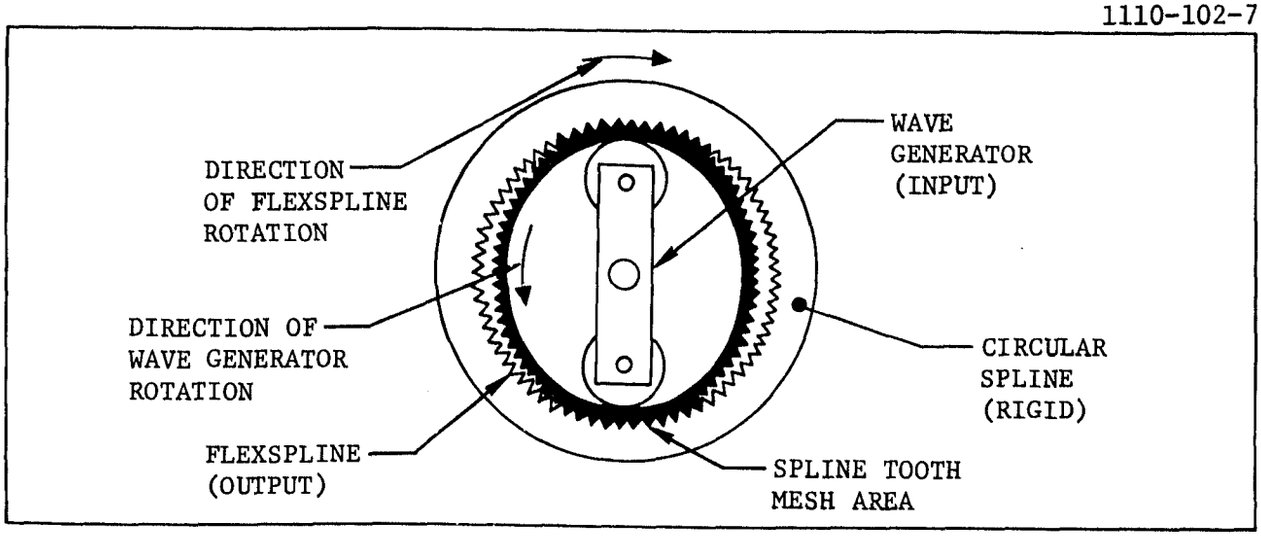

FIGURE A. ILLUSTRATION OF HARMONIC DRIVE PRINCIPLE. SMALL DIFFERENCE IN MUBER OF TEETH ON FLEXSPLINE AND CIRCULAR SPLINE CAUSES SLOW CW ROTATION OF FLEXSPLINE WHEN WAVE GENERATOR IS ROTATED CCW

1110-102-12

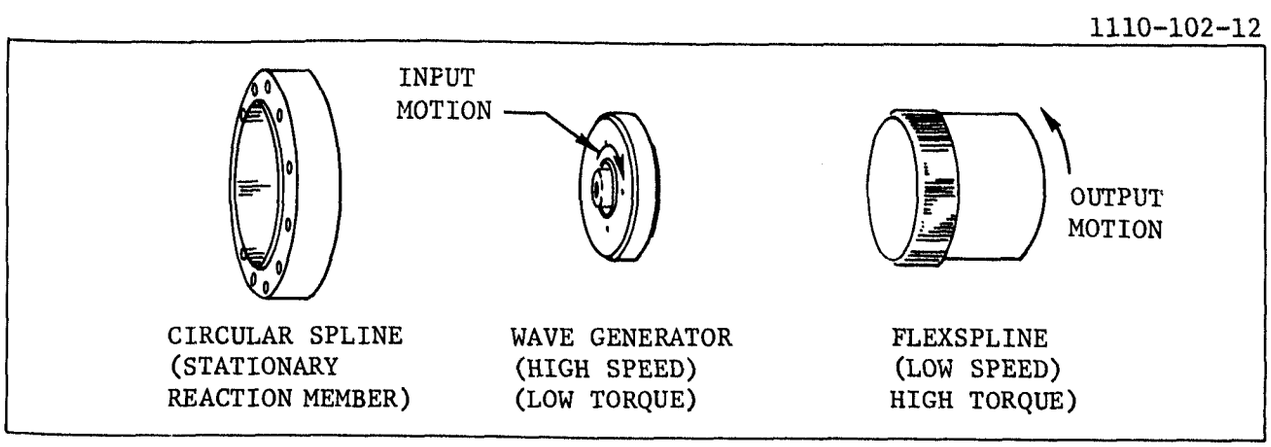

FIGURE B. HARMONIC DRIVE COMPONENTS

DESCRIPTION OF GEAR TRAIN

A number of problems are inherent in using a gear train to reduce the stepper motor speed down to output shaft speed. The most serious problems are (1) backlash, which affects accuracy, and (2) working stresses in the mechanism, which offset service life.

A scanner gear drive which was designed in detail to establish the configuration to be compared is shown in the figure on the facing page. Because it was important to reduce system inertia reflected to the motor shaft, the initial gears were made as small physically as possible. It was also possible to use relatively fine-toothed gears because transmitted torques are at their lowest in the input end. Additionally, it was desirable to make the output gear--the last gear, which is mounted on the mirror shaft--as large as possible, since the large radius of action gained thereby would minimize lost angular motion due to backlash.

With these guidelines in mind, gear size and mesh ratios had to be chosen. An overall ratio of 80:1 would normally be achieved in three passes. The ratios chosen were 13:56, 14:52, and 20:100, for the first, intermediate, and final meshes respectively. When multiplied together these ratios gave the desired ratio of 80:1. Note that tooth numbers for the first and intermediate meshes are not multiples so that cyclic wear problems could be avoided. The ratio of the final pass also is an integral multiple, even though the output shaft oscillates and does not go through a complete revolution. The diametral pitches of the three meshes were 120, 64, and 48 for first, intermediate, and output respectively.

Backlash is always a potential problem in a geared system. A certain amount of it is normally provided to minimize chances of interference. However, the pointing accuracy requirement of the BSU instrument will not tolerate the normal amount of backlash. Accordingly, gears of very high precision would be required, and would have to be lapped together by running-in to ensure meshes of virtually zero backlash. It was calculated that the maximum allowable backlash at the output mesh would be 0.0018 in. A tolerance analysis of the gear train was made and it was determined that the output mesh itself had a backlash of 0.0016 in., with contributions of 0.0008 in. and 0.0005 in. from the intermediate and first meshes, respectively, giving a total backlash of 0.0029 in. This figure was considered to be acceptable close to the allowable 0.0018 in., because various steps could be taken to reduce the backlash; for example, lapping the gear teeth together, making parts integrally to eliminate some fits, and making a more realistic error analysis taking rms averages of the random-type errors. Also, a significant gain could be achieved by using gears of 14.5-degree pressure angle, rather than the more common 20-degree pressure angle. This last step alone would lead to a 30-percent reduction in backlash.

A greater problem than achieving specified accuracy might be maintaining it. Any wear in the gears would show up directly as increased backlash and the tightness of the meshes would hamper good lubrication, whether liquid lubricants or bonded films were used. These factors compromise gear life.

It should be noted that the number of gear passes is not too important with respect to backlash--the greatest contributor to backlash at the output gear is the last gear mesh. Backlash at the other meshes is decreased considerably when reflected to the output shaft.

A potential life problem with a system using spur gears arises from the rather high and complex pattern of contact stresses in the gear teeth. For the system that was designed, the highest such stress in dynamic operation was 19,000 psi. This contrasts unfavorably with drive systems which do not have the same problems of line contact and consequent high stresses. It is a life-reducing factor.

Some additional disadvantages of the geared system were noted, such as high bearing count, which leads to added procurement, manufacturing, and inspection costs. Some positive features of the design are relatively low weight (3.5 lb) and straightforward design. However, in the balance, the many apparent problems make the geared system less desirable than systems using harmonic drives.

1110-102-10

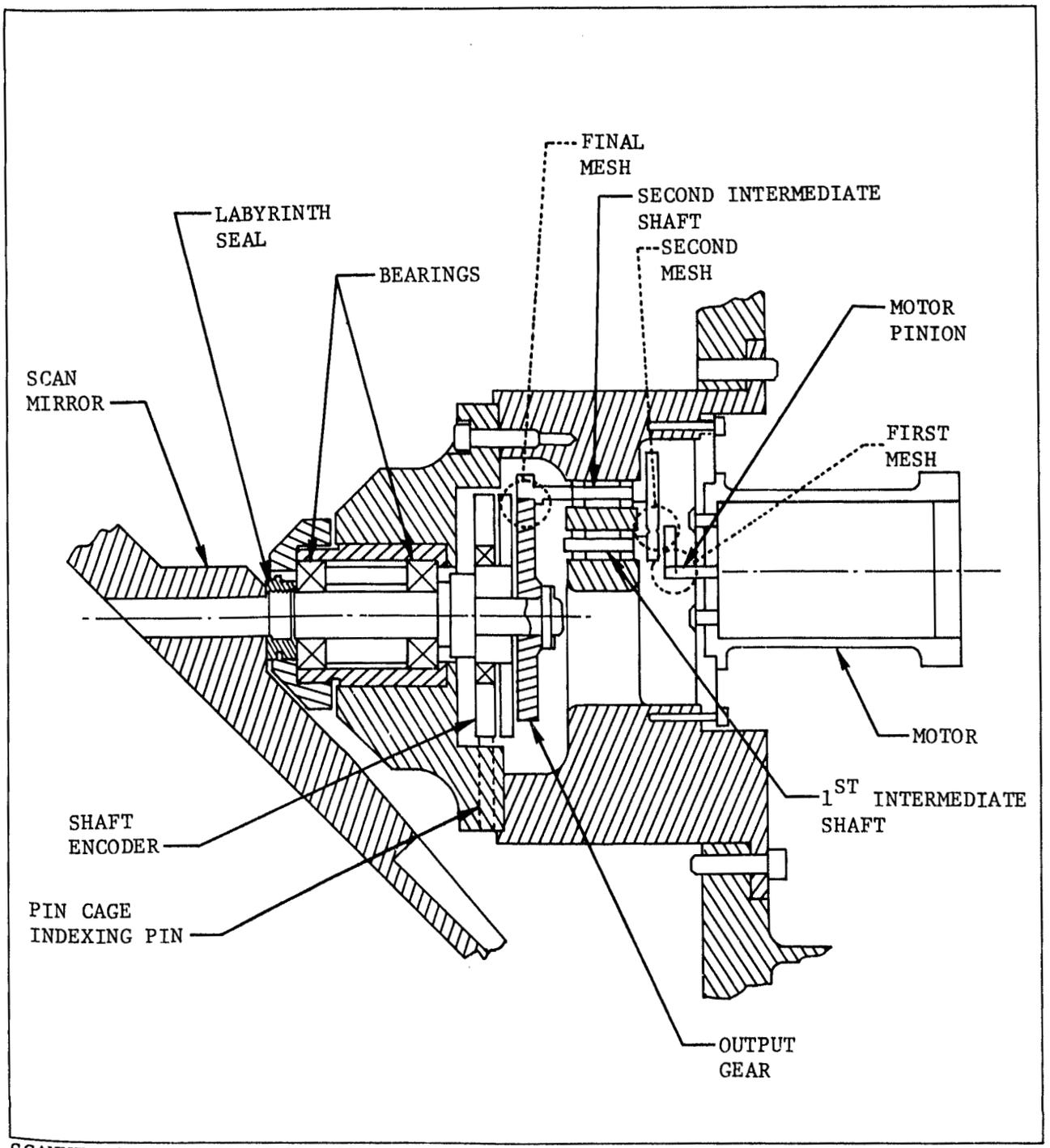

SCANNER GEAR TRAIN MECHANISM

DESCRIPTION OF DIRECT DRIVE SERVO

The requirements for a direct-drive velocity servo were evaluated as an alternative to the stepper-motor gear approach. Two configurations were considered: a brush type dc torque motor with a resolver and tachometer; and a brushless dc motor with a 14-bit encoder for position and velocity feedback.

The system requirements indicate that the servo design problems are speed of response and accuracy. Further, an analysis of the loop transfer function is required to define the component parameters.

DC torque motors are ideal for direct drive (no gears) because they provide high acceleration and deceleration while maintaining control at all speeds up to the no-load speed of the motor. Another advantage is zero backlash since the load is directly coupled to the motor, with no wear surfaces to be lubricated except shaft bearings.

The direct drive servo requires velocity and position feedback to properly control the scan mirror position and scan rate. The figure opposite is a simplified block diagram of the velocity servo with the loop functions. The motor-load transfer function also includes the inductive (L/R time constant of the motor. It can be neglected for small motors where the time constant is a few milliseconds.

During the step-dwell period, the load acceleration and deceleration must be controlled to the desired damped response characteristics. If this approach is not taken, the gain and frequency of the amplifier will have to be greater. This is one of the tradeoffs to be considered in the direct servo design. In contrast, the retrace and calibration sequence require only that a specific average velocity be maintained to arrive at the commanded position in phase with the sequence logic. The drive motor feedback requirements are determined by the peak acceleration of the step-dwell period.

The two approaches to the direct servo design are: (1) a brush-type, permanent-magnet, dc motor with tachometer and resolver feedback; and (2) a brushless dc motor with digital encoder for velocity and position feedback. The brush motors with tachometer and resolver feedback are the more conventional type of direct-drive servo. Brushless motors are most desirable since they eliminate a source of wear and drag. However, they are approximately 3 to 5 times heavier for the same torque as the brush type if they are the multi-pole permanent-magnet type, and heavier still if they are the eddy-current type.

The selection of transducers for position and velocity feedback is dependent on the loop accuracy attainable. Resolver accuracy is typically ± 2 minutes with temperature compensation, and must be temperature compensated.

Higher accuracy is attainable with pancake resolvers. The resolvers provide direct error signals to the position loop network. Using digital encoders to provide velocity and position information requires at least one bit between error band limits to avoid position ambiguity for correction commands. For the BSU scanner this would require a 14-bit encoder. The scan logic would compare the actual position of the encoder to an equivalent command position. The difference is decoded and converted to an analog signal.

An analysis of the system behavior is required to determine performance parameters, and weight and power requirements.

1110-102-36

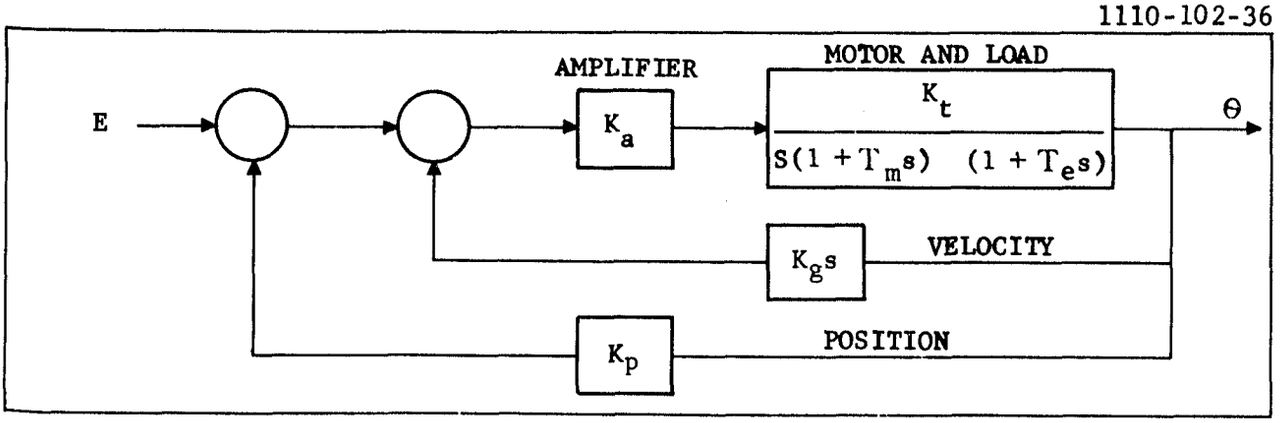

DIRECT-DRIVE SERVO BLOCK DIAGRAM WITH TRANSFER FUNCTIONS

$$\frac{\theta}{E} = \frac{K_t K_a}{TS^2 + (K_t K_g + 1)\ S + K_t K_a K_p}$$

K_g = TACHOMETER CONSTANT
K_v = VELOCITY CONSTANT
K_p = RESOLVER FEEDBACK
K_a = AMPLIFIER GAIN
K_t = MOTOR TORQUE CONSTANT
T_m = MECHANICAL TIME CONSTANT
T_e = ELECTRICAL TIME CONSTANT
T = LOOP TIME CONSTANT
ω_n = FREQUENCY
ζ = DAMPING RATIO

ANALYSIS OF THE DIRECT DRIVE SERVO

A direct drive servo system using a brush motor-tachometer-resolver configuration was designed and analyzed to determine whether it could meet the performance objectives. Although the performance objectives can be obtained, there is a significant weight penalty to using a direct drive servo.

The analysis showed that attainment of the high-frequency response required excessive amplifier gain with brush motor capable of meeting acceleration torque. The motor size was increased to reduce the required amplifier gain. The selected motor weighs 4 lb with an amplifier gain of 84. Total drive weight including electronics is estimated to be 7 lb.

The direct drive servo analysis was based on matching the loop frequency response and system time constant with the mechanical time constant of the load and motor. The system time constant determines the velocity constant of the motor. From the velocity constant, torque and amplifier gain were evaluated for power rate dissipation vs. gain. The motor and amplifier were then selected from a range of reasonable values.

The assumed servo drive response curve is shown in the figure. Acceleration is limited to 0.1 of the amplitude and occurs in 0.01 s. The 10 to 90% rise time is at constant velocity and is well damped to final position. For the assumed response curve shown, the acceleration torque required for a mirror inertia of 0.13 in-lb-s^2 is 163 oz-in. Adding breakaway torques for motor and bearings, a motor with a peak torque of 200 oz-in. is required. A typical motor for this application is a Magtech Model 5125B-072 motor.

From the transfer function the system natural angular frequency and damping are:

$$\omega_\eta = \left(\frac{K_Q K_T K_\rho}{\gamma}\right)^{\frac{1}{2}} = \left(\frac{K\nu}{\gamma}\right)^{\frac{1}{2}}$$

$$\zeta = \frac{K_T K^{+1}}{2\gamma} \left(\frac{K}{\gamma}\right)^{\frac{1}{2}}$$

The system natural frequency for a 10 ms acceleration period is 100 rad/s. The mechanical time constant using the 200 oz-in. motor is

$$\gamma_\eta = \frac{J}{F} = \frac{0.13 \times 16}{2.6} = 0.8 \text{ s},$$

which is much greater than the required 0.01 s. To calculate the required gain to obtain the time constant, take the ratio of the velocity constants:

$$\frac{\omega_{\eta_1}}{\omega_{\eta_2}} = \frac{\left(k_{\nu_1}/\gamma_1\right)^{\frac{1}{2}}}{\left(k_{\nu_2}/\gamma_2\right)^{\frac{1}{2}}}$$

$$K = \frac{\left(\gamma_\eta\right)^2}{(\gamma)^2} = 6400$$

With unity feedback ($K_p = 1$) the amplifier gain is unrealistic. The alternative was to increase motor size (to reduce the mechanical time constant) to bring amplifier gain to a reasonable value. Selecting a 400 oz-in. motor with twice the torque constant (K_t) and an F = 12.5 oz-in. rad/s,

$$\lambda_\eta = 0.166 \text{ second}$$

$$\Delta k_v = \frac{(166)^2}{(10)^2}$$

$$\therefore k_a = \frac{277}{2} = 138.5$$

The gain is reasonable but the amplifier design still faces a power rate problem. The static accuracy of the system remains to be calculated, but because this motor weighs 4 pounds with peak power dissipation of 96 W the calculation is not of interest.

No further effort was made to select the required resolvers and tachometer because of the obvious weight penalty of the dc servo drive. A brushless dc system with encoder feedback would be as heavy and highly underdamped, requiring external damping.

The direct drive servo is not recommended for the TOVS scanner for the following reasons.

- Scan drive weight - 6 to 8 lb (including electronics)
- Complex command and decoding logic required
- Power on required to hold position
- Detent latch required during launch.

1110-102-37

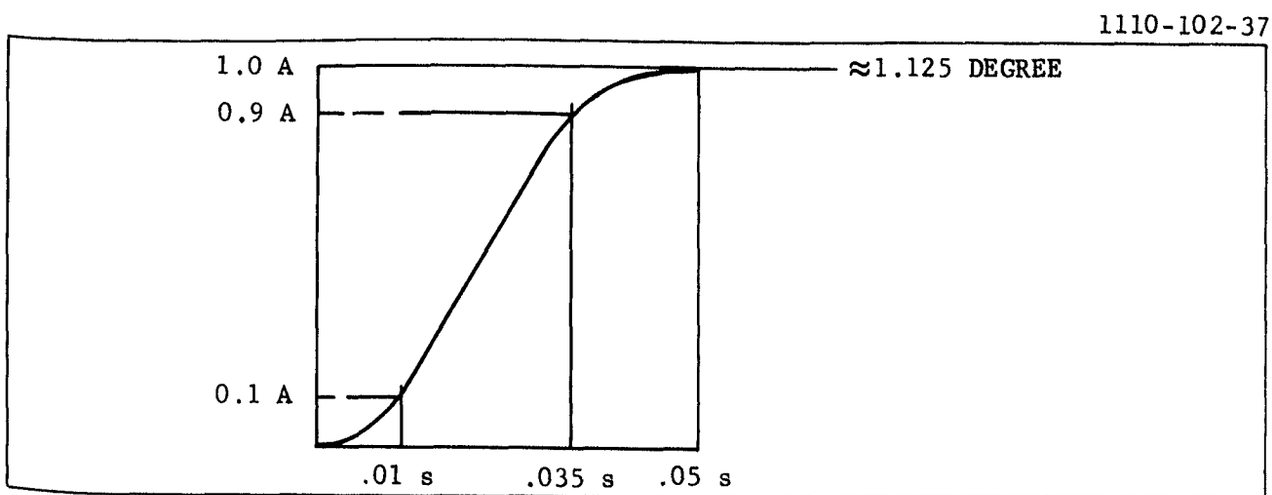

ASSUMED DISPLACEMENT-TIME PROFILE FOR DIRECT DRIVE SERVO SHOWING ACCELERATION PHASE, AND DECELERATION WITH CRITICAL DAMPING.

SECTION 3
SCAN MECHANISM DESIGN ANALYSIS

Choice of Scanner Configuration..... 3-0
Selection of Motor and Drive Ratio for Retrace..... 3-2
Approaches for Controlling the Settling Characteristics.. 3-4
Math Model Describing Scanner Motion 3-6
Performance Predictions Based on the Match Model..... 3-8

CHOICE OF SCANNER CONFIGURATION

Arrangement of the scanner components resulted in a simple axial design. The only tradeoff necessary involved the location of the encoder, which was located on the output shaft for phasing accuracy, size constaints, and negligible reflected inertia to the drive motor.

Several configurations were considered to provide a scanner which assured component alignment, minimum support structure (for weight considerations), and checkout of drive performance at final assembly.

The scanner has several design constraints derived from the instrument configuration and required by the harmonic drive.

- Size of the scan assembly--11.0 in. diameter by 16.5-in. length.
- Phasing of encoder and mirror.
- Motor load--reduce all inertia loads to the motor to enable use of minimum size motor.
- Provide for motor output torque tests.

The packaging constraints are shown in Figure A. Considering the space required for bearing and scan housing, only 3 in. are available for the motor and its support structure. This, in turn, becomes a constraint on selecting the motor and encoder. Selection of the harmonic drive permits all components to be located on a common axis, simplifying the structure and assembly.

A shaft encoder is required to read out mirror positions throughout the scan and calibration sequence. The 9-bit encoder, mirror, and instrument optical axis must be in phase to determine the viewing angle of the 1.125-degree field of view.

There are two possible locations of the encoder: on the output shaft, or at the motor. The encoder at the output shaft is a single disc multitrack unit. If located on the motor, the encoder either must be geared down to the same ratio as the harmonic drive or must use a multi-turn encoder. To keep the inertia loading at 10 percent or less of the motor requires a small diameter with more turns to resolve 9 bits. The typical size of a unit that will meet these requirements is such that the combined motor and encoder assembly could not be packaged in the available space.

One feature to be included in the operational scanner design is the ability to check motor performance after assembly and environmental testing. Access to the free end of the motor shaft is necessary to couple to a dynamic torque test fixture.

The drive assembly is shown in Figure B. The components shown were selected based upon the drive analysis described in the remainder of this section.

1110-102-14

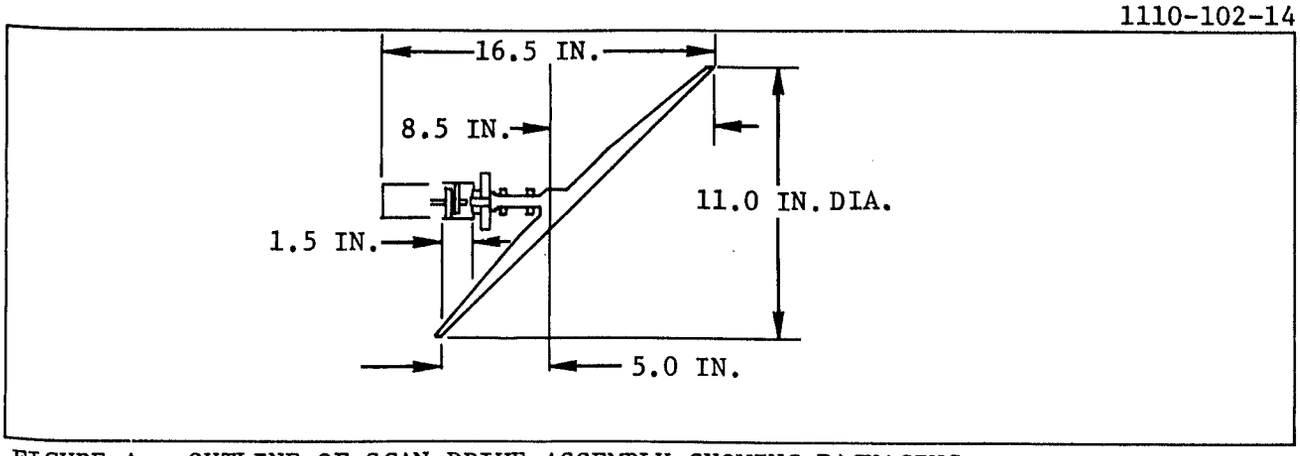

FIGURE A. OUTLINE OF SCAN DRIVE ASSEMBLY SHOWING PACKAGING CONSTRAINTS OF MIRROR, HARMONIC DRIVE, AND MOTOR

1110-102-15

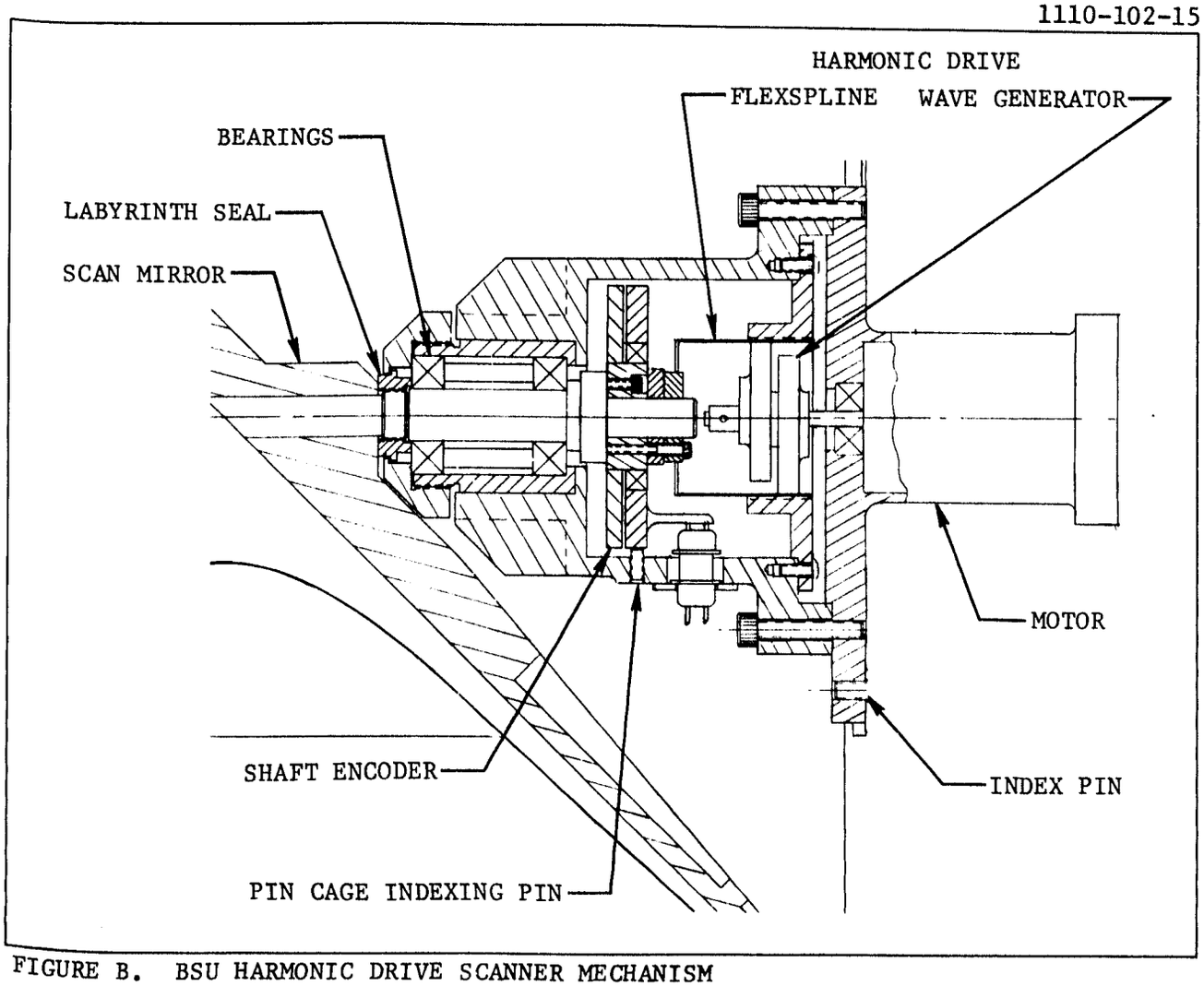

FIGURE B. BSU HARMONIC DRIVE SCANNER MECHANISM

SELECTION OF MOTOR AND DRIVE RATIO FOR RETRACE

A permanent-magnet, 90-degree stepper motor with an output torque of 3.0 oz-in. at 100 pps and an 80:1 reduction ratio drives the mirror 81 degrees in 0.72 s, as required by the scan sequence. Selection of the motor, drive ratio, and step rate is based upon satisfying the calculated torque-speed curve.

Motor and Drive Ratio Requirements - The scan motor must drive the scan mirror under two different loading conditions. The step-dwell period requires the motor to drive the mirror 1.125 degrees in 0.05 s every 0.1 s and retrace 81 degrees in 0.72 s, or 1.125 degrees every 0.01 s. The retrace determines motor acceleration requirements, while the step-settling determines the damping. The mechanism is first designed to satisfy the retrace rate and then checked for damping characteristics.

Permanent-magnet stepper motors are available with either 45-degree or 90-degree step angles. For a mirror step angle of 1.125-degrees, drive ratios of 40, 80, 120, or 160:1 are required, with corresponding step rates (50, 100, 150, etc.).

Basis for Motor Selection - Selection of the stepper motor is based upon two requirements: (1) the torque required to accelerate the load, and (2) the average torque required to drive the load at a specific pulse rate. Although the retrace rate is 1.125-degrees every 0.010 s, the characteristics of the stepper motor do not require the motor to travel one step angle in 0.01 s to accelerate the load to constant velocity. It is necessary only to rotate through half the step angle during the first pulse. The next pulse will increase motor acceleration since the mass now has angular momentum in the direction of rotation. Typically the motor "locks in" at the pulse rate within two or three steps. This characteristic will reduce the motor torque required.

Determining Average and Peak Torque Requirements - The average torque required to drive the motor at 112.5 degrees per second is the difference between the acceleration and the equivalent torque provided by the angular momentum of the mass, as shown in equation (1). Added to this value are torques necessary to overcome friction and detent torque, as shown in equation (2).

$$T_{peak} = J\ddot{\theta} = \left[\frac{J_L}{(N)^2} + J_{\omega.G.}\right] \frac{\theta}{\left(\frac{t}{2}\right)^2} \qquad (1)$$

$$T_{avg} = T_{peak} - 1/2\ J_s\ \dot{\theta}^2 + T_F + T_{DT} \qquad (2)$$

where J_L = scan mirror inertia, $J_{\omega.G.}$ = wave generator inertia, $J_s = J_L + J_{\omega.G.}$ θ = motor step angle, N = drive ratio, t = time, T_F = friction torque, and T_{DT} = detent torque.

The results are plotted in the figure for a 90-degree step angle. For a 45-degree step angle and twice the step rate, the peak torques would double. The average torque would also increase.

Selection of Drive Ratio - A harmonic drive is used in the scan drive mechanism for drive reduction. The space and weight budgets necessitate selecting the smallest harmonic drive that will meet the required torque and drive ratio. However, a tradeoff must be made between required torque and drive ratio, since use of a higher drive ratio, and, therefore, a higher step rate,

requires less torque.

The required torque (based upon a step rate of 100 pps and a drive reduction ratio of 80:1) is well within the range of the smallest harmonic drive (size 1C). Although an increase in step rate and drive ratio would reduce the torque required to drive the scan mirror, an increase beyond the drive ratio range available for a 1C harmonic drive would require a larger harmonic drive, with a corresponding increase in weight, size, and wave generator inertia. Such an increase would provide no system advantage.

Selection of Motor - From the data presented in the figure, the selected drive ratio of 80:1 based upon a 90-degree stepper at 100 pps requires 8 oz-in. peak torque and 2.6 oz-in. average torque. Motors are available that meet or exceed these requirements; e.g., the 15 P-03 from Computer Devices. The ratings are for single-phase drive at 28V.

1110-102-1

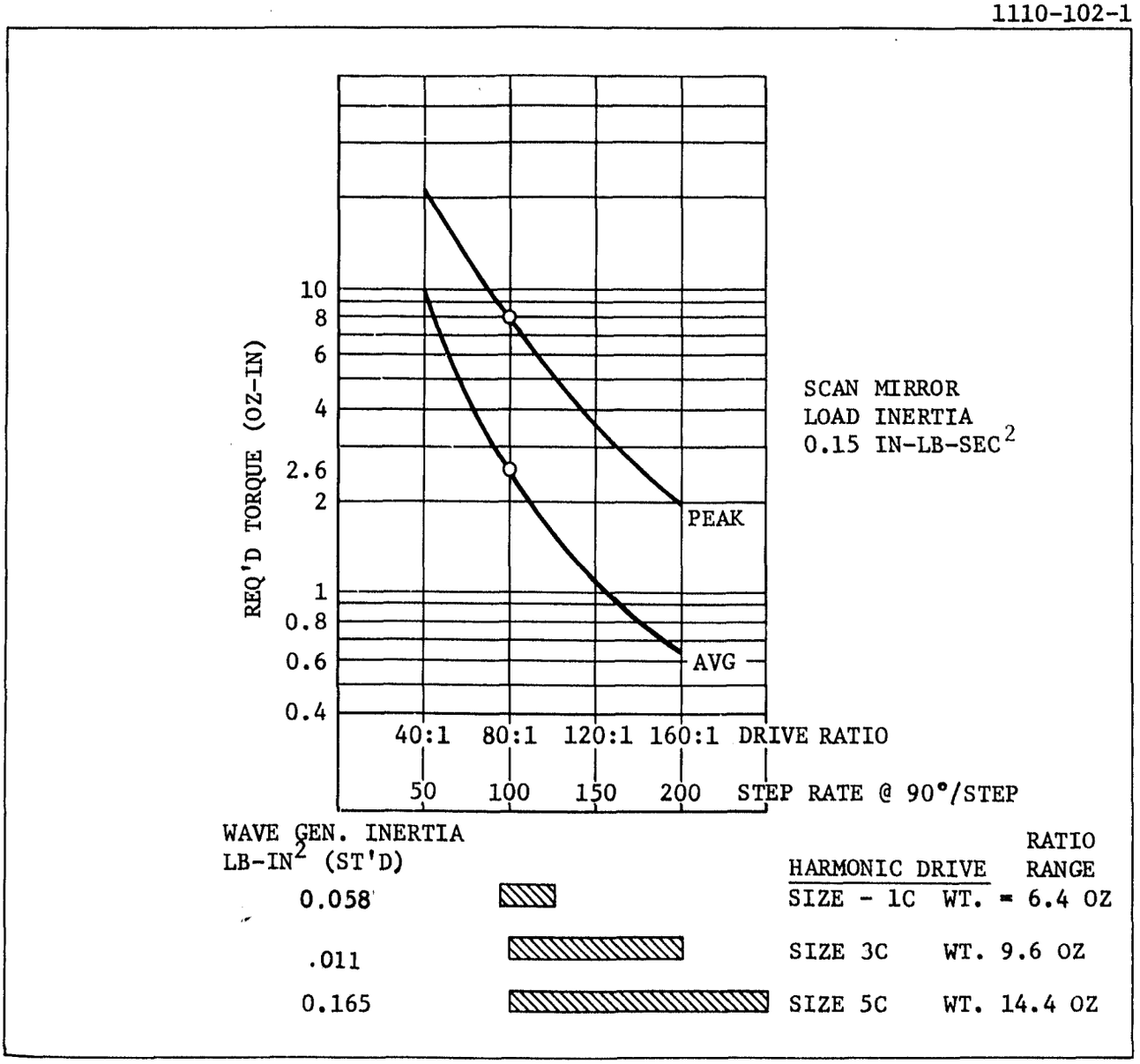

REQUIRED TORQUE - SPEED CURVE TO DRIVE SCAN MIRROR DURING RETRACE PERIOD. SELECTION OF REDUCTION RATIO, STEP RATE, AND DRIVE SIZE CAN BE DETERMINED FROM THE DATA PRESENTED

APPROACHES FOR CONTROLLING THE SETTLING CHARACTERISTICS

To achieve the desired response with minimum weight and power, the characteristic response curve of the step dwell period should be underdamped, with the last crossover of the ±0.1 degree error band occurring before 50 ms. To control the settling characteristics, the slope of the motor performance curve can be selected to provide the required damping. Other possibilities are modulation of the applied voltage or the use of dynamic braking.

A motor capable of driving the load at the 100-pps retrace rate can obviously single-step in 0.05 s. How the rotor arrives at its final position (1.125 degrees) is dependent upon the damping. The response curve can be any shape between the underdamped and the critically damped curve and even slightly overdamped if the angle is within the error band at 0.05 s. From typical curves plotted in Figure A, only an underdamped response similar to curve B (which also travels approximately half the step angle in 0.010 s) can be considered, unless the torque, weight, and power are unnecessarily increased.

The motor torque-speed curves corresponding to the response curves are shown in Figure B. The motor must provide the acceleration and average torque requirements shown by curve B. The motor performance curve is a function of the air gap only (assuming all other parameters are the same). The smaller the air gap, the greater the magnetic coupling between stator and rotor, which produces a higher stall torque and detent torque. The maximum step rate is reduced since the higher detent force reduces motor output torque.

The scanner drive damping is a function of velocity dependent parameters such as the slope of the torque-speed curve, viscous damping, and external electronic circuit features (e.g., dynamic braking, retro-torquing, and modulation of the applied voltage during the single-step period). The damping sources are:

- Motor Damping Factor* - (in-oz-s/rad)
- Viscous Damping - Not predictable; should be less than 10% of total damping to avoid changes in response.
- Dynamic Braking* - All motor windings are grounded after power pulse to dissipate currents generated from the rotor magnetic field.
- Retro-Torquing - Momentarily applying a reverse pulse to the last phase to limit overshoot.
- Controlled Velocity Gradient* - Applies voltage modulation within the 0.050-s period to control motor velocity, reducing overshoot.

*The motor damping factor can be selected, and the dynamic braking and controlled velocity gradient are readily implemented.

A model of the motor load combination describing the motion and damping characteristics is required. Once confirmed by analysis, a drive breadboard can be assembled and tested.

1110-102-2

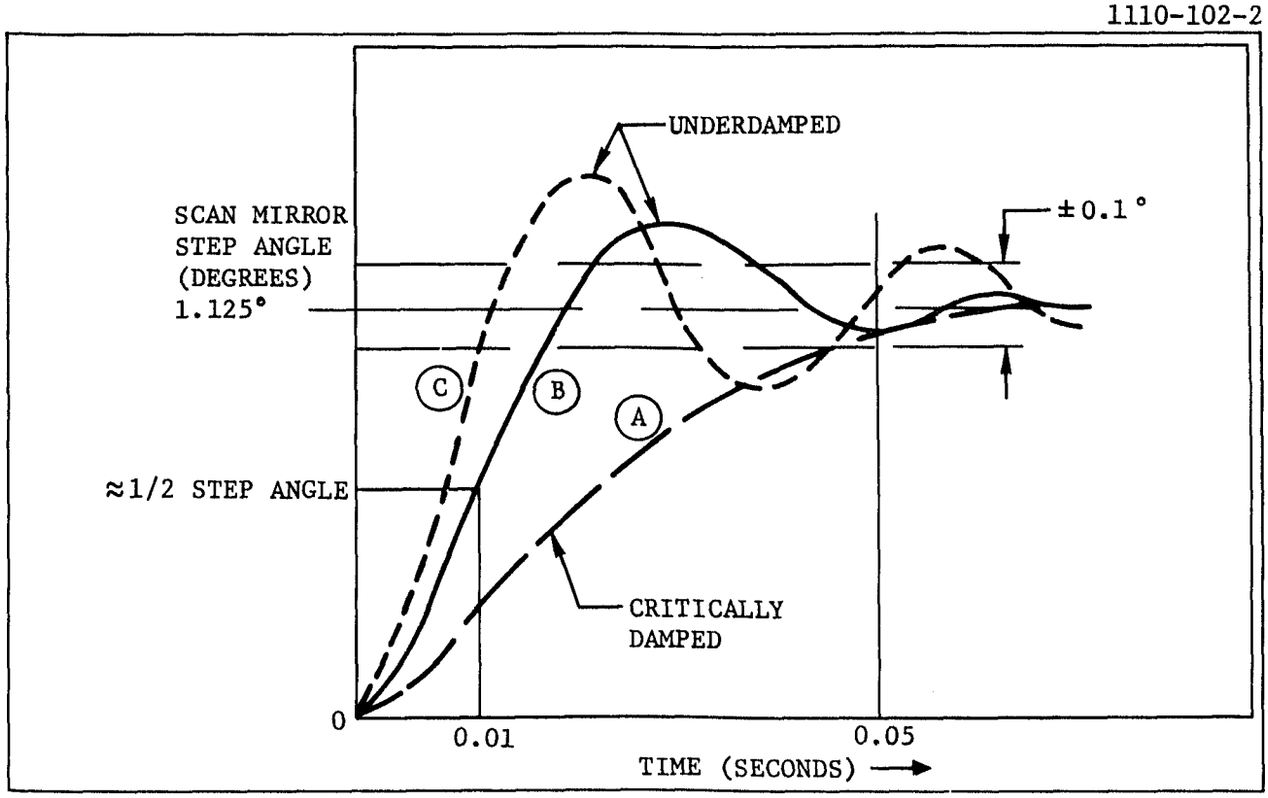

FIGURE A. SCAN MIRROR RESPONSE CURVE RELATING SETTLING CHARACTERISTICS AND ACCELERATION FOR RETRACE

1110-102-3

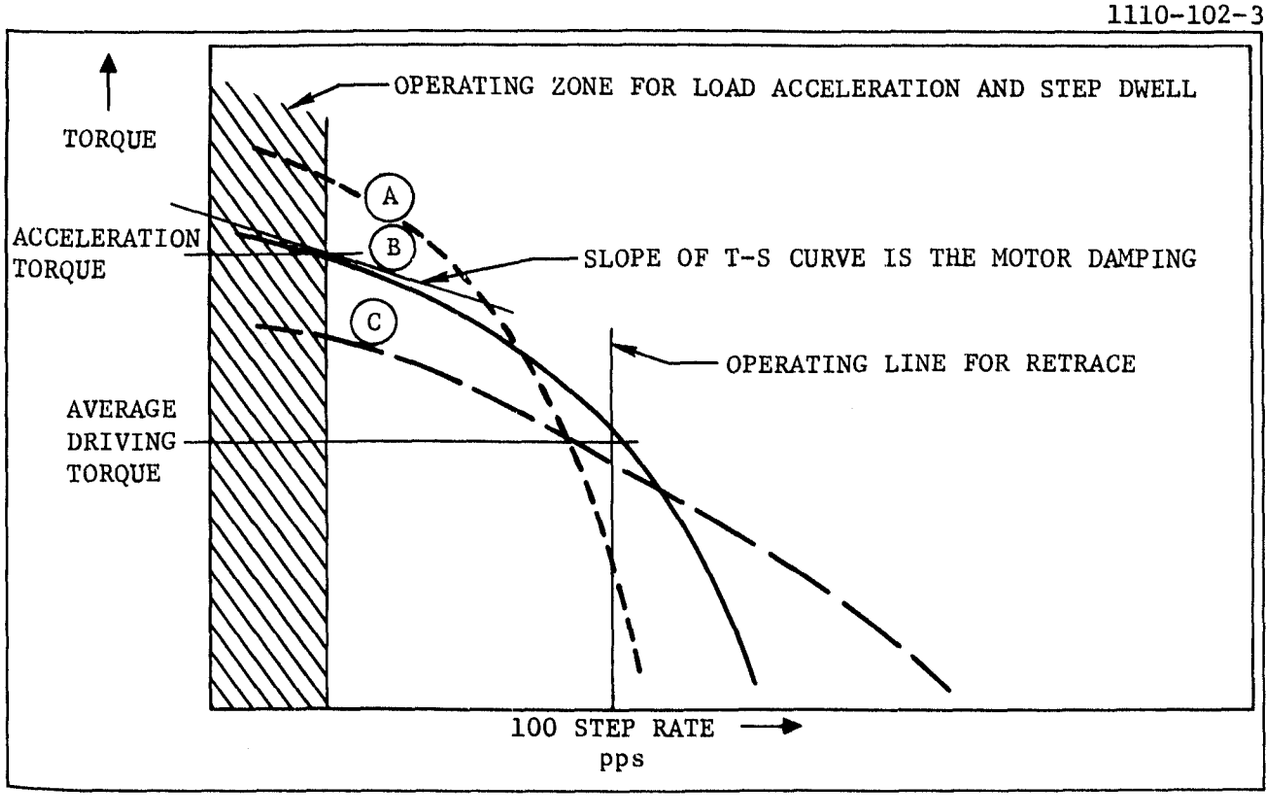

FIGURE B. TYPICAL MOTOR TORQUE-SPEED PERFORMANCE CURVES SLOWING RELATIVE BEHAVIOR. THE MOTORS ARE IDENTICAL EXCEPT FOR AIR GAP.

MATH MODEL DESCRIBING SCANNER MOTION

A linearized second order equation describing the step settle motion of the scanner was developed on the ITPR program. The model predicted performance within 10 percent of test data. A similar analysis of the BSU scanner shows that the selected motor and harmonic drive are capable of driving the scan mirror and meeting the single step response and retrace rate.

The math model is used to determine whether a specific motor will meet the step-dwell requirements. The scanner breadboard will establish actual operating conditions.

The model is based on the equation of motion of the motor shaft (symbols are defined opposite):

$$J\ddot{\theta} + F\dot{\theta} = T_o \tag{1}$$

As soon as the motor rotates, the motor generates a reverse torque. Therefore, the output torque, T_o, is equal to the applied torque minus the restoring torque

$$J\ddot{\theta} + F\dot{\theta} = T_M - T_R \tag{2}$$

Substituting motor characteristics

$$JR\ddot{\theta} + FR\dot{\theta} - K_tE + K_tK_e\dot{\theta} + K_rR\theta = 0 \tag{3}$$

This is

$$\ddot{\theta} + \left(\frac{F}{J} + \frac{K_t\ K_e}{JR}\right)\dot{\theta} + \frac{K_r}{J}\theta = E\ \frac{K_t}{JR} \tag{4}$$

This second order differential equation is the same as that of the common spring-mass-damper system. In operational form, the step response is

$$\theta(s) = \frac{1}{S}\left[\frac{E\ \frac{K_t}{RJ}}{S^2 \quad \left(\frac{K_tK_e + FR}{JR}\right) s + \frac{K_r}{J}}\right] \tag{5}$$

Of all the model parameters, only the small viscous damping component of the damping factor is unknown. Estimates from the past test data were used for this parameter. The 1/s term is the transform of a step input. The denominator represents the characteristic form

$$S^2 + 2\,\zeta\,\omega_n\,s + \omega_n^2 \tag{6}$$

where ω_n is the natural frequency and ζ is the damping factor. From this equation we can calculate the response to a step input and determine the damping factor ζ required of the motor. The required damping factor is 0.4 or greater. With the motor characteristics substituted in the denominator of equation (5), the natural frequency and damping can be calculated. If it is greater than 0.4, the response will behave as predicted.

The math model is for the continuous power condition only, but is a good, worst-case approximation of the motor dynamics. How the response curve is modified with voltage modulation is dependent on the duty cycle, detent torque, and dynamic braking.

DEFINITION OF SYMBOLS USED IN TEXT

s	Laplace transform variable (complex frequency)
J	total system moment of inertia at the motor shaft
θ	angle of rotation of motor shaft (dot indicates time derivative)
F	viscous damping
E	applied voltage
T_o	total torque
T_M	applied torque
T_R	restoring torque
K_t	applied torque constant
K_e	electrical damping torque constant
K_r	restoring torque constant
R	winding resistance
ζ	damping factor
ω_n	undamped natural frequency of oscillation

1110-102-4

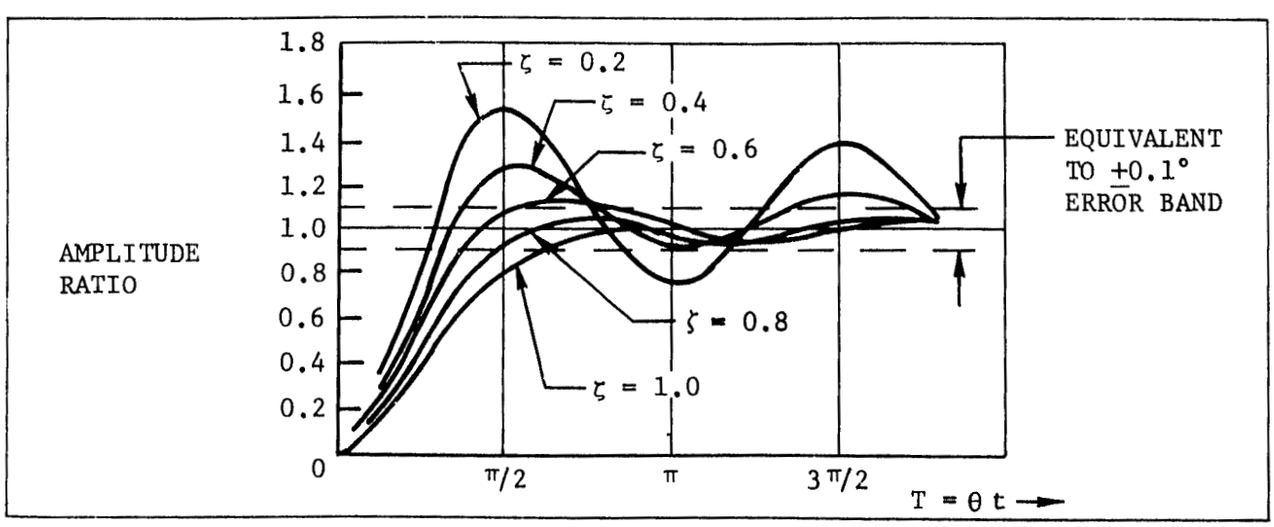

RESPONSE TO STEP INPUT OF A SECOND ORDER SYSTEM. THIS PLOT IS USED TO DEFINE THE MINIMUM DAMPING REQUIRED TO SETTLE.

PERFORMANCE PREDICTIONS BASED ON THE MATCH MODEL

Using the math model and the characteristics of a commercially available size-15 stepper motor driven in a single-phase series mode, the behavior of the scanner is predicted to meet the step and settle, and retrace requirements.

The transform of the motion equation developed in the previous topic must be corrected for a single-phase series drive, since motor constants are tabulated assuming single-phase center-tapped operation. The winding impedance is doubled, changing the motor constants proportionally to obtain the transformed step response:

$$\theta(s) = \left[\frac{E}{s} \quad \frac{2\,\frac{K_T}{J}}{s^2 + \left[\frac{K_T K_e + FR}{RJ}\right] 2s + \frac{2K_r}{J}} \right]$$

In this equation, E is the applied voltage. Other symbols are defined in the table. The selected motor performance curve and characteristics are shown in Figure A. The corresponding natural frequency and damping are given by

$$\omega_n^{\,2} = \frac{2K_r}{J}$$

$$\zeta = \left[\frac{K_T K_e + FR}{RJ}\right] \left(\frac{J}{2K_r}\right)^{1/2}$$

Substituting the motor parameters given in the table leads to a value of ω_n = 109 s^{-1} and ζ = 0.43, close to the values desired.

The solution of the transfer equation was done with the G.E. Time Share program "Laplace Transform Inversion." The program computes the response in the domain of a linear system whose Laplace transform is as the ratio of two polynomials. The calculated response curve is shown in Figure B. The curve shows that the motor will accelerate the load to constant velocity within a few milliseconds and is damped to within plus and minus 0.1 degree in less than 50 ms. At the retrace rate of 100 pps, the motor will be capable of driving the scanner at 157 rad/s average velocity measured at the motor shaft.

This analysis is based on the assumption that motor power is kept on during the entire 100-ms step interval. Power can be removed during the step at the point where the acceleration is zero, to be reapplied just as the desired angle is reached. It can then again be removed after the mirror settles within the desired error band.

MOTOR PARAMETERS

K_T = torque constant = 0.246 in.-lb/A (per phase)

K_e = electrical damping constant = 0.1115 V/rad/s

K_r = restoring torque constant = 0.2185 in.-lb/rad (per phase)

J = total inertia = 30×10^{-6} in.-lb-s^2 (includes rotor and wave generator inertia and reflected mirror inertia at the motor)

R = winding resistance = 20 ohms per phase

F = damping constant = 8.7×10^{-4} in.-lb-s/rad (slope of the motor response curve at acceleration torque)

1110-102-5

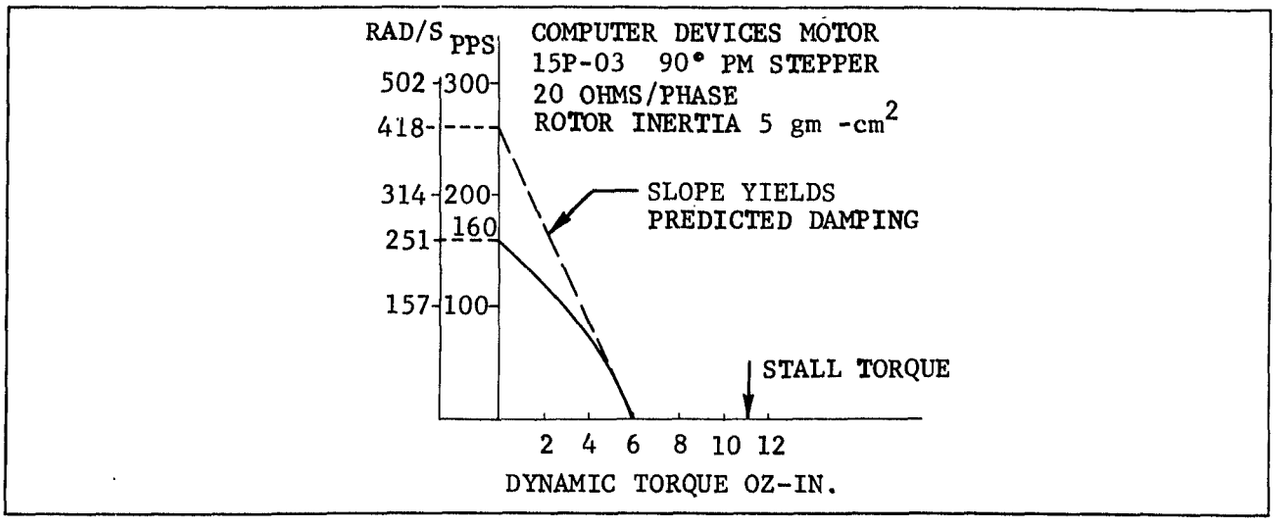

FIGURE A. MOTOR PERFORMANCE CURVE AT 28-V AND SINGLE-PHASE EXCITATION.

1110-102-6

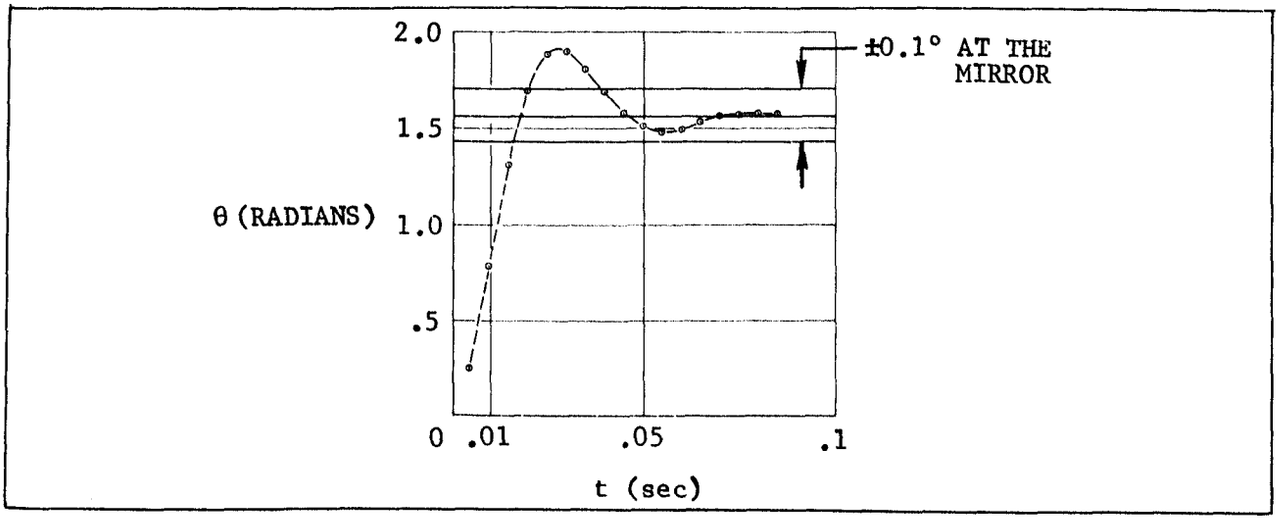

FIGURE B. CALCULATED SINGLE-STEP RESPONSE OF THE 90 DEGREE STEPPER MOTOR.
THE AMPLITUDE RATIO OF 1.22 CORRESPONDS TO A DAMPING FACTOR OF 0.42 (MINIMUM REQUIRED VALUE).

SECTION 4
DESIGN VERIFICATION

Description of the Scanner Mock-up 4-0
Performance of the Breadboard Scanner 4-2
Conclusions from Breadboard Testing..... 4-4

DESCRIPTION OF THE SCANNER MOCK-UP

A mock-up of the scan assembly was fabricated so that the predicted performance could be verified by test.

The mock-up consisted of a size-15 permanent-magnet stepper motor (Computer Devices No.15 P-03) a 100:1 harmonic drive, the mirror mass, and a precision resolver. A 100:1 ratio was used since an 80:1 drive was not available within the program schedule constraints. The simulated mirror mass was increased to reflect the equivalent load inertia to the motor. Wave generator inertia (the most important load) is the same for any ratio in a given drive size. The resolver was calibrated to two arc-minute accuracy. The mock-up is shown in Figure A.

A motor drive circuit and sequencer was fabricated which was capable of driving the mock-up in the correct step-dwell and retrace sequence. The drive circuit also allowed variation of the power on/off cycle to the motor during the step period, and contained a limit counter to isolate the step-dwell period for measuring single-step response.

The motor drive requires a dc power supply and pulse generator. Varying the pulse width and rate will determine the optimum duty cycle for minimum scan power. A block diagram of the test setup is shown in Figure B.

The resolver is used to measure accurately the output step amplitude during the step period. An induction resolver (Reeves Model 602) is used just above the null position. When the primary windings are excited at 5 kHz and approximately 8.5 V, the output of the phase windings of the rotor is 8.5 times the sine of the phase angle. Up to four or five degrees, the sine of the angle is linear with the phase angle. The change in amplitude of the 5-kHz excitation signal is proportional to the angular displacement. The response is recorded on a storage oscilloscope triggered from the driving pulse to the motor. Only the peak of one-half of the 5-kHz signal is recorded.

An important change made in the mock-up as a result of testing was the removal of the standard USM corporation wave generator and the substitution of a special twin roller type having greatly reduced inertia. It was this change that permitted acceptable dynamic performance to be achieved. Inclusion of the special wave generator did not require any other changes in the design.

1110-102-19

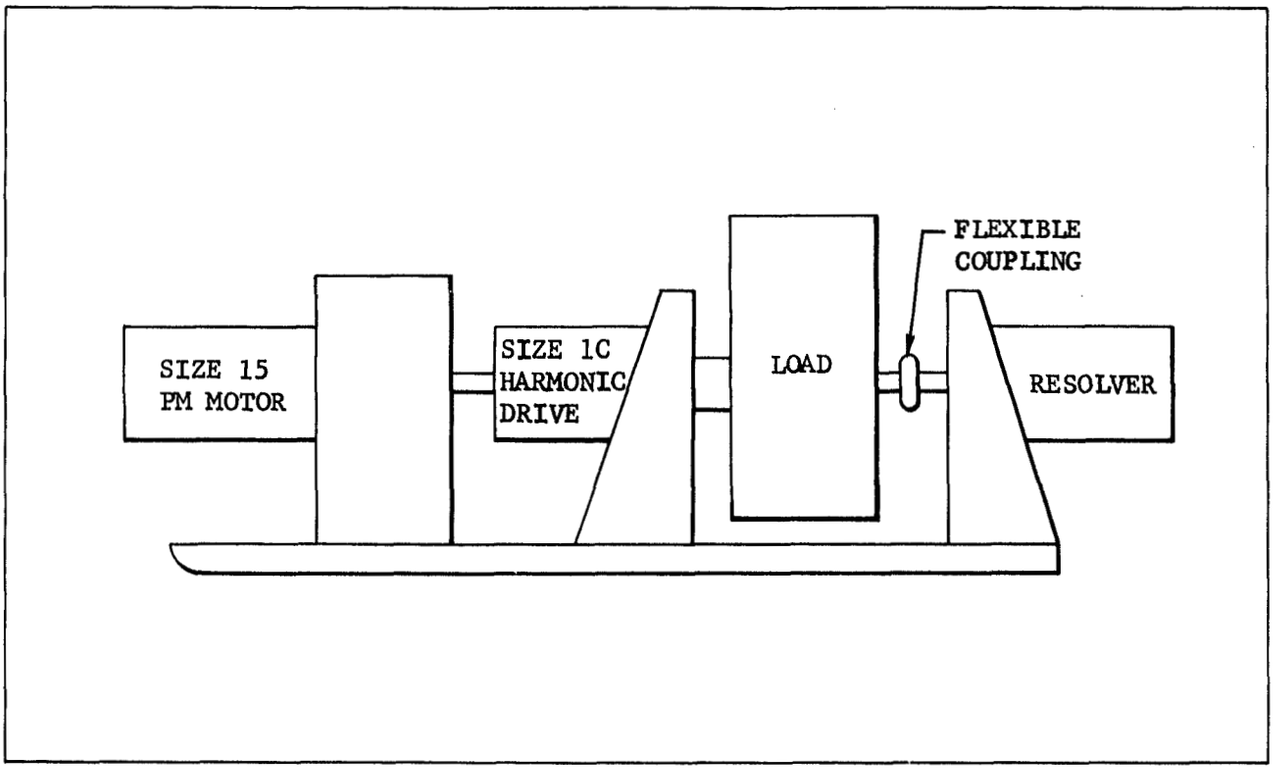

FIGURE A. SCANNER MOCKUP WITH SIMULATED MIRROR MASS

1110-102-20

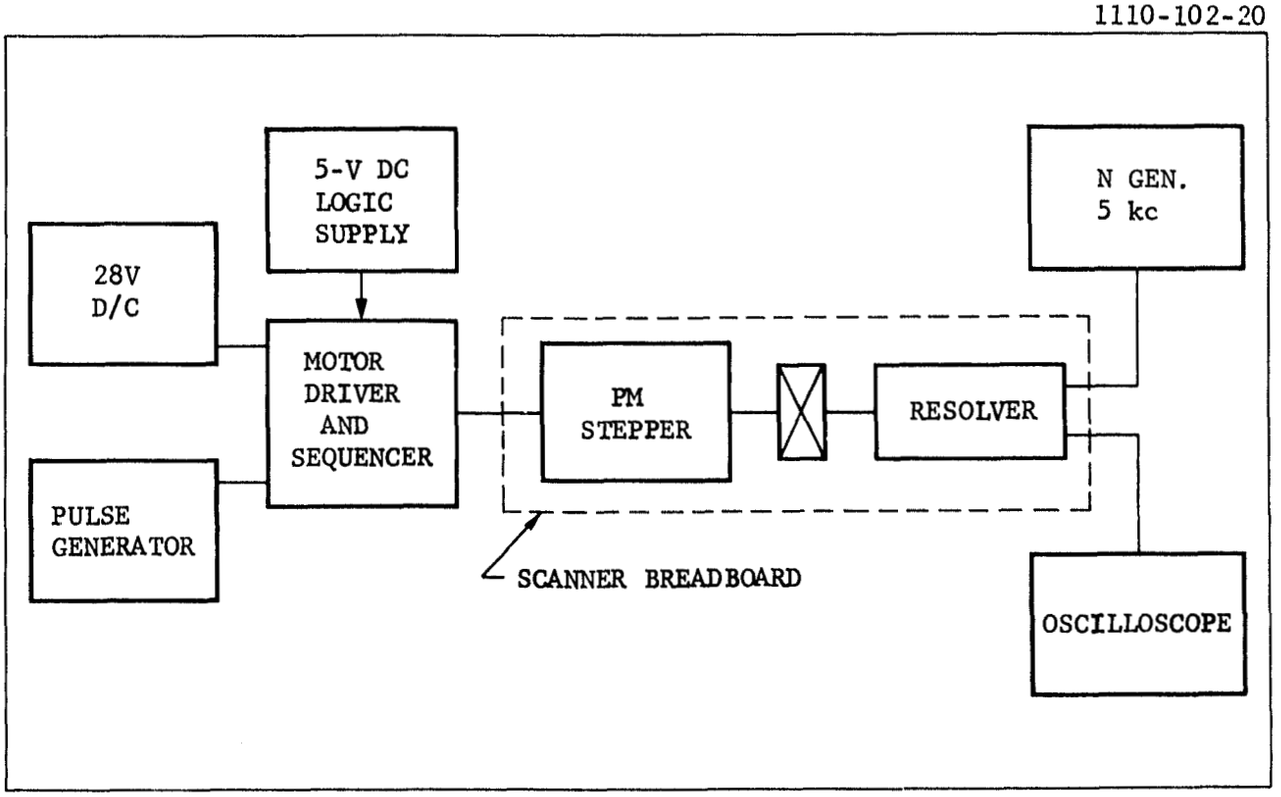

FIGURE B. BLOCK DIAGRAM OF MOTOR DRIVE AND TEST INSTRUMENTATION

PERFORMANCE OF THE BREADBOARD SCANNER

Testing of the breadboard scanner furnished data on response time, stepping rate, and required power which showed that the scanner performance requirements can be met.

Response times were determined by displaying the resolver output on a storage oscilloscope. The resultant graphic record permitted all response parameters to be studied. Maximum stepping rate was measured by observing the highest input pulse rate that the scanner could follow. The rate at which the onset of erratic operation--easily observable visually-- occurred was taken as the maximum stepping rate. Electrical power taken by the system was determined by measuring voltage, which was variable, and considering the duty cycle, which was known from the driver logic design.

Parameters that are applicable for determining the system response time are time to first crossover, and time to settle within the error band. Determinations of these times are shown in Figures A and B. Figure A is an oscilloscope trace obtained from the original breadboard using the standard, elliptical-bearing wave generator. First crossover is at 28 ms, and settling within the error band never occurs, because of the high inertia of the standard wave generator. Figure B shows a typical performance curve obtained from the breadboard with a low inertia wave generator fitted. First crossover is still at about 28 ms, but in this case the output does settle in, at about 40 ms.

The parameter of stepping rate is a measure of the motor's torque margin. For the original scanner breadboard with the standard wave generator, the highest input frequency that could be tracked with system inertia attached was 85 Hz; while the system requirement was 100 Hz. This deficiency was due to the dominance of input shaft inertia on system dynamics, and disappeared when the low-inertia wave generator was installed to reduce total input shaft inrertia. The improved system could track an input of 125 Hz -- a 25% safety margin.

At 28 V dc input to the motor, the power drawn by the motor is 19.6 W. Since the power is applied in pulses rather than continuous excitation, there is a duty cycle involved, and the power averaged over an 8.0s scan-retrace cycle is less. For the step-and-dwell mode with a total power-on time of 30 ms, the average power input is 5.3 W, and for the retrace mode it is 1.8 W (19.6W for 0.72s), for a total of 7.1 W. The power lost in the drive circuit was not measured, but is calculated to be about 0.3 W. Changing the wave generator from standard to the double-eccentric type did not change the power because nearly all the power is lost in motor winding resistance.

Because of the importance of temperature to motor performance, thermal testing of the scanner breadboard was conducted. It was found that the motor started up and drove the mechanism without difficulty at -26°C, after an 18-hour cold soak at that temperature. Degradation of motor performance at elevated temperatures is to be expected because of the combined effects of increased winding resistance, reduced permanent magnet strength, and slightly increased motor air gap. The temperature at which the onset of reduced performance (maximum step rate reduced to 90 Hz) was noted was 70°C-- well above the maximum predicted scan motor temperature of 43°C.

1110-102-21

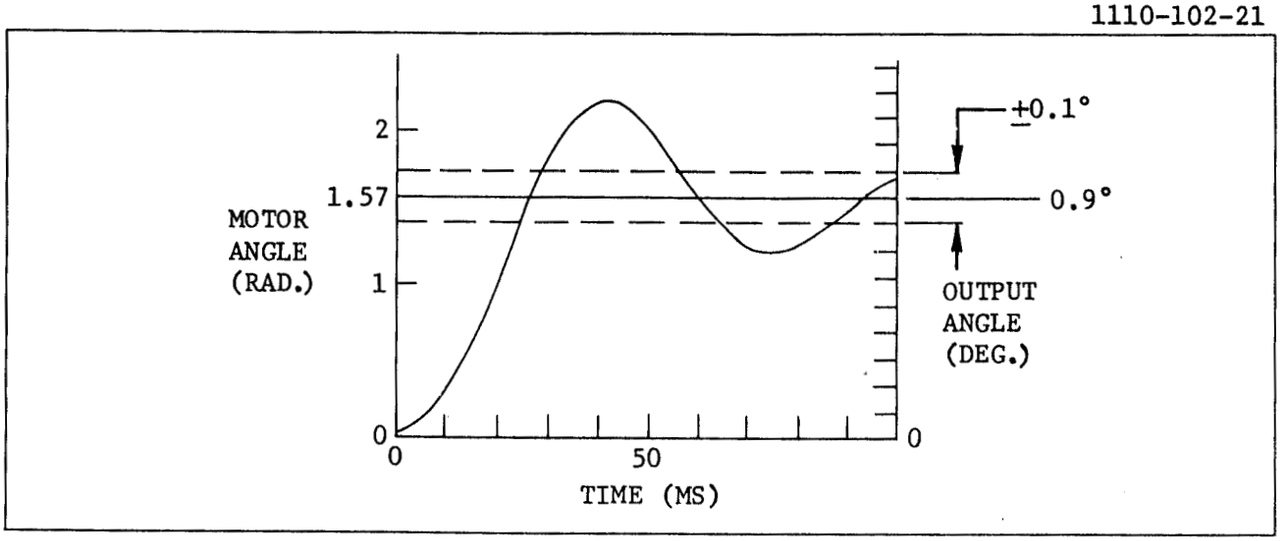

FIGURE A. RESPONSE OF MOCK-UP SCANNER WITH STANDARD WAVE GENERATOR

111-102-22

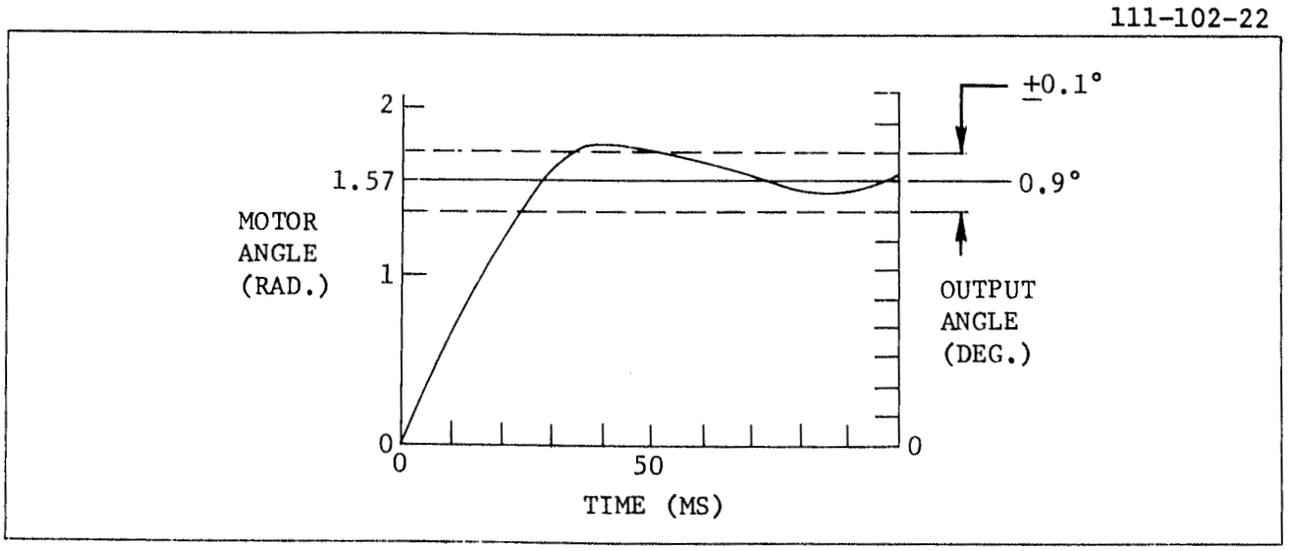

FIGURE B. RESPONSE OF MOCK-UP SCANNER WITH LOW-INERTIA WAVE GENERATOR

CONCLUSIONS FROM BREADBOARD TESTING

The performance of the breadboard scanner during testing met or significantly exceeded both specified and established goals.

Conclusions drawn from scanner breadboard testing were that stepping rate, response time, and drive input power were within the required limits. Torque margin of the motor was found to be 32 percent. To guarantee the reported performance, total inertia on the input shaft must not exceed 6×10^{-6} lb-in-s^2. Ability of the scanner to operate at the highest predicted temperature +43°C was verified.

The scanner mockup testing demonstrated the importance of reducing load inertia and matching the drive power and system damping. When system inertia was reduced by the addition of the double eccentric wave generator, the motor was able to drive at 125 pps, providing a 25 percent margin on retrace speed with the size-15 motor.

The reduced load inertia, however, would normally overshoot the allowable error band if the power were held continuously during the step-settle period. By limiting the power-on time and, therefore, the velocity and mass momentum at crossover, the available damping was effective in limiting the magnitude of the overshoot. A response time of 50 ms was the baseline requirement for the scanner breadboard.

The 50 ms response time was achieved comfortably, with very little overshoot above the error band. Only a short, second application of power after the first crossover was necessary to achieve it.

Desire for a lengthened signal integration time prompted the establishment of a design goal scanner response time of 37.5 ms. This can be achieved reliably by use of two-phase drive and an improved dynamic braking scheme. The tests confirmed that the single-phase series drive was more efficient than the single-phase center-tapped drive used on ITPR. Total equivalent power input was 50 percent less with no reduction in torque.

Thermal testing of the scanner breadboard was conducted because of the possibility that scanner performance might be degraded under conditions of elevated temperature. This condition did not occur in testing until a temperature of 70°C was reached; so it was concluded that this will not be a problem. System performance should be further explored in thermal-vacuum testing during the BSU development.

CONCLUSIONS OF SCANNER BREADBOARD TESTING

PARAMETER	REQUIREMENT	PERFORMANCE ACHIEVED BY BREADBOARD
Stepping Rate	100 pps	125 pps
Response Time	50 ms*	50 ms
Load Inertia	0.19 lb-in-s^2	0.19 lb-in-s^2
Torque Margin	Not stated	32%
Power Input	Less than 10 W	8.5 W
Allowable Input Shaft Inertia	Not stated	6×10^{-6} lb-in-s^2
Maximum Operating Temperature	43°C	70°C

* The revised requirement of 37.5 ms can be met by use of a larger motor or by use of a two-phase drive.

SECTION 5
SCANNER MECHANICAL DESIGN

Mechanical Layout of the Scanner 5-0
Structural Problems in the Scanner 5-2
Selection of Scanner Lubricants 5-4
Thermal Design of Scanner 5-6
Details of Shaft Encoder 5-8
Selection of Flight Scanner Components 5-10
Estimates of Physical Characteristics 5-12

MECHANICAL LAYOUT OF THE SCANNER

The BSU scanner assembly consists of a coaxial arrangement of the scan mirror, shaft, encoder, harmonic drive, and scan motor--preassembled into a cylindrical aluminum housing that mates with the instrument frame. In addition to being simple, lightweight, and economical of space, this arrangement is easy to assemble.

The layout of the scanner assembly is shown in the figure on the facing page. Note that the scanner housing utilizes space that would otherwise be wasted because of the mirror configuration. The cantilevered aluminum housing which supports the whole assembly has mounting surfaces for the shaft support bearings and the motor mounting flange, and contains the harmonic drive and the encoder in the completed assembly.

The scan mirror, shaft encoder, and flex spline of the harmonic drive are mounted to the mirror shaft. The scan mirror and shaft encoder are located on opposite ends of the mirror shaft by Woodruff keys precisely aligned with respect to one another. The scan mirror is secured by a roll pin; the shaft encoder by three screws. The mirror shaft is supported in the scan mirror subassembly housing by ball bearings that are preloaded by two sleeves threaded to the shaft and the housing hub. Preloading is against precision spacers and is therefore insensitive to the torque placed on the sleeves.

The shaft encoder is indexed to the housing by means of a pin cage indexing pin installed from without the housing. The pin contains a spring to limit excessive loading of the mirror shaft bearings. The scanner housing does not mate directly to the instrument frame, but rather to the large flange on the front of the stepper motor. This flange is provided directly on the motor housing in order to improve concentricity between the motor and the harmonic drive, and to promote good heat transfer from the motor to the instrument frame.

The wave generator used in the scanner is not the elliptical-bearing type which is standard for these units, but a special eccentric, double-roller type. In addition to offering greatly reduced inertia as well as the resultant dynamic performance advantages that have been discussed, this wave generator design is also somewhat easier to assemble into the flex spline.

When the wave generator is inserted into the bore of the flex spline, it must be determined that proper assembly has taken place, since the fine-pitch teeth could engage plus or minus one tooth from the theoretical elliptical center line. Operating the drive in this condition for a prolonged time would destroy the teeth. The drive is checked by recording the torque over several revolutions. The peak torque recorded should be equal to the motor detent torque. Peaks greater than 50 percent of the detent torque indicate improper operation of the drive; and it must be disassembled, checked, and reassembled.

1110-102-18

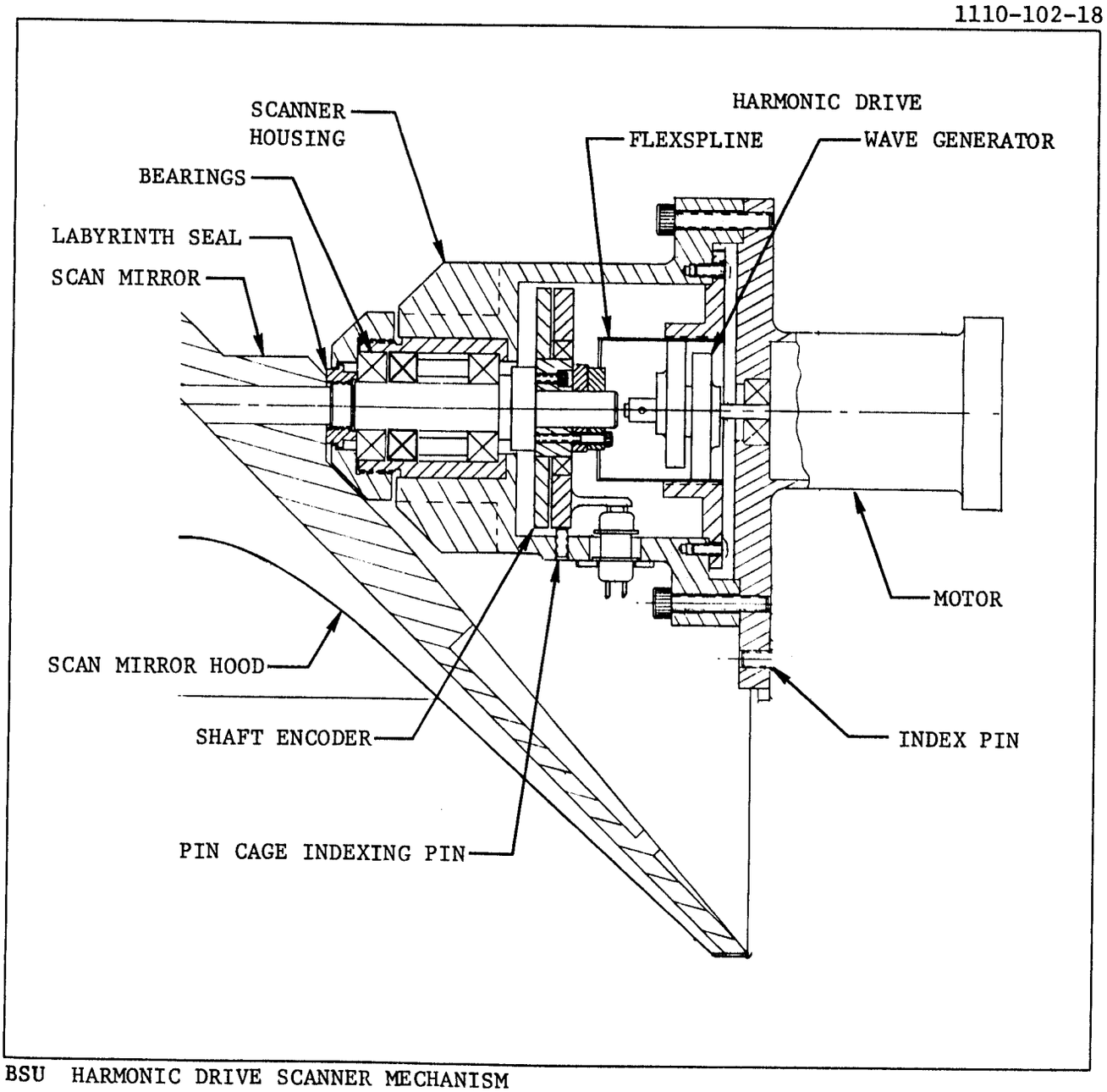

BSU HARMONIC DRIVE SCANNER MECHANISM

STRUCTURAL PROBLEMS IN THE SCANNER

Analysis has shown that safety factors provide the answers to structural problems in the scanner subassembly. The potential problems were the stress and deflection in the mirror sun-shield and the mirror shaft, stresses in the harmonic drive flexible element, and ball-bearing stresses.

The mirror sun-shield is a thin aluminum cylindrical shell. It is subject to possible stress problems under vibration and acceleration. Analysis shows the maximum stress in the sun shield to be 35,000 lbf/in^2; and the material strength is 70,000 lbf/in^2, giving a strength safety factor of 2.0.

The mirror shaft and bearings are stressed under environmental loading. Accordingly, this area was checked for bending stresses in the shaft and possible vibration overloading of the ball bearings. It was found that the maximum bending stress in the stainless steel shaft is 23,700 lbf/in^2. Since the allowable yield value is 275,000 lbf/in^2, the yield strength safety factor for the scanner shaft is 11.6.

Structural analysis of the scan mirror bearings showed that there was danger of the bearings being overloaded during vibration testing, a condition caused by the growth of the mirror to meet the thermal design. Consequently, the design was changed to show a tandem pair of angular contact bearings at the front of the scanner drive housing (nearest the mirror), and a single bearing at the rear. The highest bearing load under worst vibration conditions is 520 pounds, and the load rating for the tandem pair is 1,310 pounds; therefore the stress safety factor is 2.5 for these bearings.

An area of concern, but one which actually is not a problem, is the flexing member of the harmonic drive. Over the two-year design life of the instrument, this member will undergo 3.3×10^8 cycles of reversed loading as the wave generator rotates inside it. The implications of this are best explored by using the manufacturer's data, which is shown in the figure opposite. Here it can be seen that the operating point is safely below the failure curve, and safety factors are generous.

SCANNER STRESSES AND SAFETY FACTORS

Safety factors are equal to or greater than 2.0 in every case.

Component	Maximum Stress Factors	Rated or Allowable Factors	Safety Factor
Mirror Sunshield	35,000 lbf/in^2	70,000 lbf/in^2	2.0
Mirror Shaft	23,700 lbf/in^2	275,000 lbf/in^2	11.6
Shaft Bearings	520 lb	1,310 lb	2.5
Harmonic Drive Flex Spline	16.4*	60	3.7
Wave Generator - Bearing Life	3.3×10^8 rev	7×10^8 rev	2.1

*Torque Constant - Derived Quantity

1110-102-35

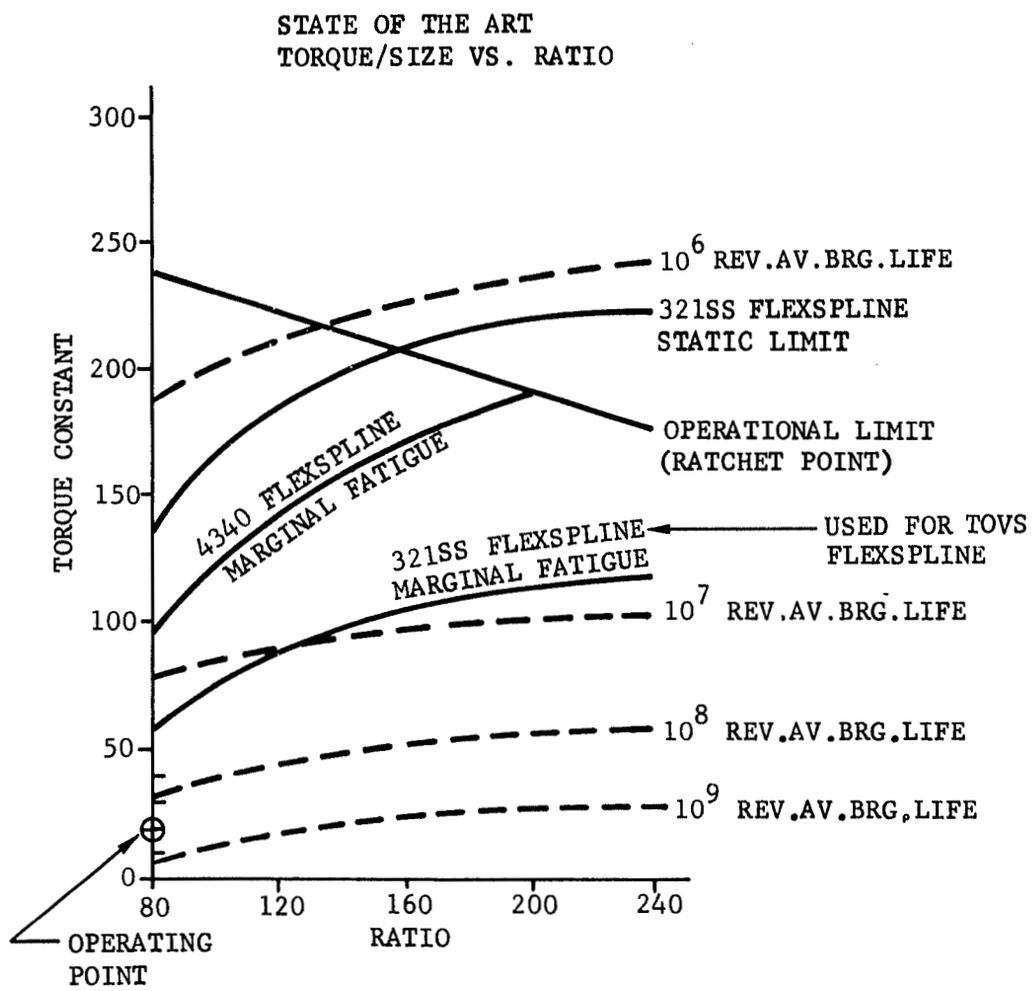

$$\text{TORQUE CONSTANT} = \frac{\text{TORQUE (IN-LB)}}{(\text{PD})^3\ (\text{IN}^3)}$$

WHERE PD = PITCH DIAM (1.4 IN. FOR BSU)

$$\text{FATIGUE SAFETY FACTOR} = \frac{60}{16.4} = 3.7$$

$$\text{BEARING LIFE SAFETY FACTOR} = \frac{7 \times 10^8}{3.3 \times 10^8} = 2.1$$

HARMONIC DRIVE SAFETY FACTORS

SELECTION OF SCANNER LUBRICANTS

A number of lubricants were considered for the scanner, and the leading candidates are Vac-Kote wet film lubricant, deposited gold, and Krytox grease. Different lubricants and lubrication techniques should be used in the different areas of the scanner mechanism, since the lubrication problems encountered vary.

Because of the variety of mating mechanical parts in the scanner mechanism, a number of lubricants and techniques were examined: silicone oils and greases, Krytox perfluoroalkylpolyether lubricant, Vac-Kote deposited lubricant films, deposited gold metal, polyimide plastic coatings, and diester-based liquid lubricants.

Silicone greases and oils have many successful space applications. Although they have the advantage of a very flat temperature-viscosity curve and low outgassing, their film strength and lubricity properties are poorer than those of other lubricants and they have a known failure mode consisting of the generation of small, glassy particles. This phenomenon is referred to in several reports, and may have contributed to the ITPR scanner failures. Silicone greases and oils should be excluded from consideration until this phenomenon is investigated adequately and the problem is solved.

Krytox lubricants are a series of fluorinated polyethers which have good lubricating properties and good temperature stability. The high temperature viscosity and outgassing properties are not as good as those of the silicones, but these lubricants have been applied successfully in space. In particular, Krytox was used on the Backscatter Ultraviolet (BUV) instrument (a NIMBUS experiment). In that case the grease was "plated" on the metal surfaces by deposition from a solution. This controlled the lubricant thickness so that bearing starting torques were not increased too much at low temperatures.

Vac-Kote is a bonded molybdenum disulfide film. While there are many dry film processes on the market, Vac-Kote has the best history of reliability in space applications. There are two basic types of Vac-Kote--"wet" and "dry." The wet type has a liquid lubricant constituent, in addition to the bonded MoS_2 film, and it is this type that is recommended for the scanner.

Many space mechanisms have been successfully lubricated with deposited films of gold, a technique that is effective when the gold-coated surface runs against a harder metal surface. This lubrication technique is a good candidate attractive for use on the spline mesh.

The preloaded ball bearings that support the mirror shaft are a relatively straightforward bearing application. Their total number of revolutions for two years in orbit is 4×10^6. Vac-Kote film lubricant would be a good choice for these bearings.

The bearings of the motor and wave generator will experience 3×10^8 revolutions during the two-year mission. It is doubtful that bonded-film lubricants would have sufficient life for this application. Therefore, Krytox synthetic liquid lubricants are recommended. Grease plating should be used on motor bearings to avoid torque buildup at low temperatures. A lubricant-impregnated, sintered-nylon reservoir can be put inside the harmonic drive and excess lubricant vapors vented overboard away from the instrument optics.

In the harmonic drive spline mesh, there is a tendency for any particulate matter present to migrate toward the center of the teeth. When liquid lubricants are used, wear-debris particles become trapped in an abrasive paste and wear the teeth badly. Because of this, a dry material of excellent film strength that will prevent the generation of wear particles is needed. Deposited gold is recommended.

Lubrication is required in the encoder and its bearing and for the pins in the pin cage. Krytox oil is recommended for the pins; the bearing should be grease plated with Krytox. Barrier films should be used to prevent oil migration to the encoder contact surfaces.

TABLE I. LUBRICANTS STUDIED

All of these lubricants have been successfully used in space.

• Silicones	- Flat viscosity curve; low outgassing. Has failure mode involving generation of hard, glassy particles.
• Krytox	- Adequate temperature range (-40°C to +230°C); outgassing same as silicones; excellent lubricity and film strength.
• Vac-Kote	- "Wet" and "dry" types. Qualified in many applications. Wear is the only failure mode.
• Gold	- Deposited in films approximately 2×10^{-4} in. thick. High load-carrying ability.

TABLE II. RECOMMENDATIONS

• Mirror Shaft Bearings	- Vac-Kote
• Motor and Wave Generator	- Krytox grease plated, and oil in Nylasint reservoir.
• Harmonic Drive Spline Teeth	- Deposited Gold
• Encoder	- Krytox oil and grease.

THERMAL DESIGN OF SCANNER

To control the scan mirror and scan motor temperatures, the scan mirror is fitted with a heat shield which aids in the dissipation of absorbed heat from the sun, while the scan motor is tightly coupled to the scanner web so that it generally follows the gross temperature levels of the instrument.

Scan Mirror Temperature Control - The scan mirror receives direct sun, albedo, and earth radiation through a large cutout in the instrument housing. This radiation represents one of the major components of gross BSU energy balance. In order to control the solar heating problem, a sun shield is fixed to the back of the mirror. This sun shield does not entirely shield the mirror, but it almost completely prevents solar radiation from reaching the optics subassembly and completely shields calibration blackbodies on the instrument housing. It also serves as a radiator to reject the solar heat absorbed by the scan mirror, which does not reject the heat well because its gold coating absorbs sunlight but does not emit thermal radiation. The back of the mirror and the inside of the sun shield are painted with a high emittance black paint to help couple the mirror to the shield. The outside of the sun shield is coated with a white paint having low solar absorbency and high infrared emittance.

When TIROS is on the sunlit side of the earth, the shield completely shadows the mirror. During periods when direct sunlight does fall on the mirror, the back of the mirror radiates the sun shield and the shield radiates to space. With this scheme, the mirror temperatures vary from -14°C in the cold case to 5°C in the hot case. The temperature of the sun shield varies from -22°C to -6°C for the same two cases.

Gradients across the mirror are minimized by conduction in the eliptical mirror (5/8-in. thick beryllium) and by the radiative interchange between the back of the mirror and the sun shield. The worst-case gradient between the top and bottom edges of the mirror is calculated to be less than 4°C, which is at the detection threshold of the optical system.

Scan Motor Temperature Control - To prevent overheating, the scan motor is thermally coupled directly to the instrument. The motor housing for the scanner will be custom-made with a large aluminum flange that mates with the scanner web through a thermally-conductive RTV interface of 11 square inches. For the operational modes this will yield motor temperatures about 9°C hotter than the web temperatures.

Thermal Model - The analysis which led to the temperatures quoted above was performed using the thermal model shown in the figure opposite. Major heat inputs to the system are themotor dissipation and solar loading of the scan mirror and the sun shield. The housing blackbody assembly contributes to the energy balance by means of the radiative coupling between it and the sun shield. Other major radiative paths exist between the scan mirror and the sun shield and between the mirror and shiled. Conduction between the scan mirror and output shaft and the harmonic drive housing is small, which motivated the use of a monometallic bearing support system to avoid thermal distortions resulting from the possible temperature difference between the drive mechanism and the mirror.

This model does not take account of the internal details of the harmonic drive and scan motor. The motor rotor and wave generator shaft are thermally coupled to the cases only by conduction through lubricant and bearings. The flex spline is tightly coupled to the scan mirror through the output shaft, but only weakly coupled to the harmonic drive case through bearings and the

small contact area of the gears. The omission of these details should not substantially affect the results, since there is little heat generated at the neglected internal nodes.

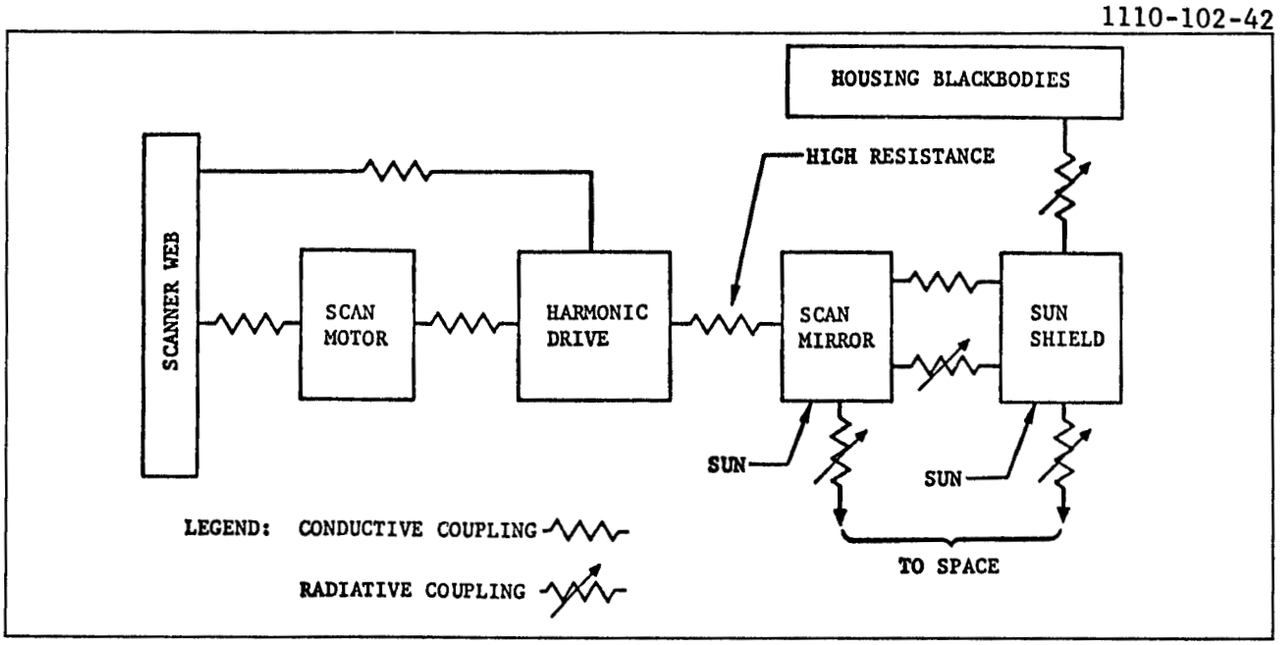

THERMAL MODEL FOR BSU

DETAILS OF SHAFT ENCODER

The shaft encoder for the BSU scanner is a custom Gray Code encoder of the pin-contact type. In order to greatly improve accessibility, ease of assembly, and reliability, the encoder is a unitized assembly located on the scanner output shaft.

The primary functional requirements for the encoder are the angular resolution, accuracy, and life. The angular resolution is 1.125 degrees per count over the 81-degree scanning sector, for a total of 72 scan-position counts. The encoder also reads out both calibration positions: 180 degrees from nadir, and 70 degrees from nadir. The correct count must be obtained in a band 0.04 degree wide, centered on the theoretical position. The life requirement--very important in this application--is two years in orbit, which is equivalent to 4×10^6 total revolutions, at peak speeds of 19 r/min

The encoder is located on the scanner output shaft. This directly coupled design has several advantages. The encoder is a single-turn device, and neither gearing nor turns-counting devices are necessary. Encoder speeds, and total revolutions, are low. Because of the high torque available on the output shaft, neither the inertia nor the slight frictional drag of the encoder are significant.

Details of the shaft encoder design are shown in the figure on the facing page. The encoder is a self-contained, separately-tested assembly, as shown in the cross-sectional view. Both the pin cage and the code disc are mounted on the turning shaft. There is a bearing between the two to permit smooth relative rotation and to hold concentricity; further, the pin cage is accurately indexed and held against rotation by a pin in the scanner housing which engages the slot at the periphery of the pin cage. The pin is spring-loaded to prevent excessive side loading of the bearings. The entire assembly is indexed to the mirror shaft by a precision Woodruff key, ensuring that encoder codes do in fact represent the proper mirror positions.

In order to properly locate the pin cage, the encoder bearing must resist rotation in axial planes (note the dimension and tolerance on the cage-to-disc gap on the drawing). This is achieved by using a four-point contact bearing. As the name implies, the balls contact the races at four points instead of the usual two. This allows the bearing to develop a resisting moment in axial plane.

The pin-contact encoder design, with its established reliability, is responsive to the requirements. The specified code pattern, count interval, and accuracy are easily achieved. Some life data for this type encoder show a mean life of 2×10^7 revolutions at 100 r/min, which is a much higher speed than the peak speeds that will be reached in the operating BSU. Compared with the 4×10^6 revolution requirement, this indicates a safety factor of 5. Reliability is further enhanced by the self-contained nature of the design. The pre-assembled encoder can be checked thoroughly on the bench, therefore avoiding assembly problems.

1110-102-11

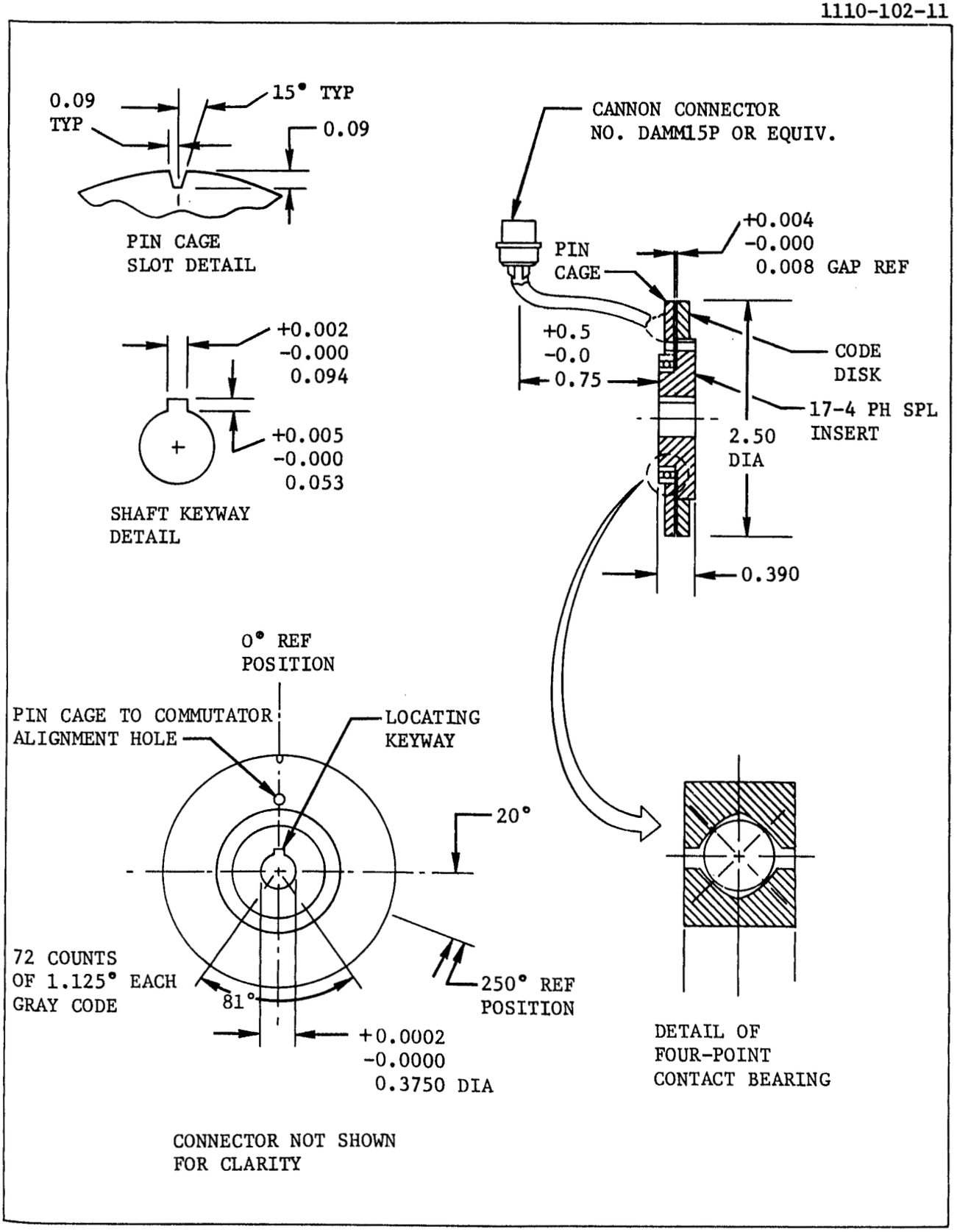

DETAILS OF TOVS SHAFT ENCODER. USE OF THE FOUR-POINT-CONTACT BALL BEARING ALLOWS A SIMPLE, UNIFIED ASSEMBLY. DIMENSION FROM PIN CAGE TO CODE DISK CAN BE INSPECTED, AND IS NOT DISTURBED WHEN THE ENCODER IS ASSEMBLED INTO THE SCANNER HOUSING

SELECTION OF FLIGHT SCANNER COMPONENTS

The TOVS/BSU scanner component performance specifications and characteristics have been selected to assure performance demonstrated by the scanner mock-up. Component qualification testing and screening at specified environmental conditions are required to assure a scanner which will meet all flight acceptance tests and provide a high degree of confidence of operating for two years in orbit.

One purpose of the scanner mock-up was to assist in defining components. In addition to verifying scanner dynamic performance, breadboard testing helped determine component sizes. Analysis was also used to achieve the same purpose, so that there was a rational basis for sizing and specifying all components.

Scanner breadboard testing showed that a size-15 stepper motor and size-1C harmonic drive are adequate for the BSU scanner. The motor and system dynamics, and the input inertia were the governing factors in the selection; and the same physical sizes of motor and drive as were used in ITPR are adequate also for the BSU scanner. Motor and harmonic drive specifications are shown in the table.

The motor specification shows a 90°-step, size-15 unit. This is a common configuration, and describes the motor used in mock-up testing. The specified power value of 10 W average power maximum was bettered by 15% in testing; and the specified weight by 17%.

The harmonic drive unit easily meets specifications. Power and torque capacities are much greater than needed in the application. A specification applied to the harmonic drive which could be met only with difficulty -- if at all -- by alternative devices in that of backlash. The specified value is two minutes of arc. This is achieved by extra tight control of the spline tooth manufacturing processes at USM Corporation, and will be verified for each delivered unit by screening.

The encoder specified is a 7-bit, pin-contact type. Because the count interval and accuracy requirements are easily met with current technology, so the most significant specified values for the encoder are the environmental parameters.

Imposed environmental testing conditions are the same for all scanner components. Some conditions, such as acceleration and vibration, are given as part of the NESS specification. Others, notably temperature, result from the analytical work accomplished as part of the study. The thermal design study predicted temperatures that will occur in various areas of the instrument. Values substantially in excess of the predicted temperature extremes ($31^{o}C$ to $43^{o}C$ operating) are specified for testing. The NESS specification indicates an ambient pressure of 5×10^{-5} torr or less. This value is increased to 10^{-6} torr, since this vacuum can be achieved for testing and results in a more realistic test.

In addition to the considerations discussed above, detailed component specifications will include the necessary workmanship, manufacturing control, traceability, and quality assurance criteria. Detailed component specifications are included in an appendix to this report.

SUMMARY OF BASIC SOUNDER UNIT SCANNER COMPONENT SPECIFICATIONS

Motor

Type	Permanent Magnet, 90° stepper, Size 15
Operating Voltage	28 V dc
Power	10 W average power max.
Weight	12 oz.

Speed Reduction Drive

Type	USM Corporation Harmonic Drive, Size 1C
Weight	6 oz.
Ratio	80:1
Backlash	2 arc minutes

Encoder

Type	Pin Contact
No. of Tracks	7
Count interval	1.125 degrees

Environmental Specifications - All Components

Pressure	10^{-6} torr
Temperature	$-25^{\circ}C$ to $+ 70^{\circ}C$
Acceleration	22 G (non-operating)
Vibration	Sinusoidal 10g 5-2000 Hz Random 20 g rms @ 0.2 g^2/Hz 20-2000 Hz

ESTIMATES OF PHYSICAL CHARACTERISTICS

The BSU scanner fits within the overall instrument layout and meets the derived requirements of space envelope, weight, and power.

In the instrument weight budget, 3.06 lb was allotted to the scanner subsystem, exclusive of the scan mirror and sunshield. This total weight is comprised of the individual component weights listed in the table.

Scanner drive power has been discussed extensively in this report. A goal of 10 W for the average motor power was set in the study. This goal has been met, since the average power is only 6.6 W.

The scanner's instantaneous uncompensated angular momentum about the spacecraft roll axis is 0.0375 lb-in-s for the step-dwell phase; and 0.375 lb-in-s for the retrace, or slewing, phase. Over any 8-s multiple of step-dwell and retrace operation, this integrates to zero, since the period of oscillatory motion is 8 s. Every 256 s there is a calibration sequence, however, and at that time the scanner output shaft describes a complete revolution. Each calibration sequence, therefore, results in an increased angular momentum to the instrument; but this momentum, in turn, can be used against the steady opposite rotation of the chopper disc to yield a decreased momentum to the spacecraft.

An alternative approach, which would result in a zero long-term angular momentum input, is to slew back from the calibration positions to the scan sector rather than to describe a complete revolution. The total angular movement is greater for this scheme, so that time must be taken away from the calibration dwells. Each calibration would then be 2.0 s rather than the 2.4 s available with the scan program discussed above.

Pertinent parameters of the scanner's electrical drive circuit are shown in the table.

ESTIMATES OF TOVS-BSU SCANNER PHYSICAL CHARACTERISTICS

Long-term angular momentum input to the instrument from the scanner depends on which way the calibration functions are mechanized.

WEIGHT

Component	Weight	Source*
Motor	0.62 lb	M
Harmonic Drive	0.20 lb	M
Encoder	0.38 lb	E
Output Shaft	0.24 lb	C
Output Bearings	0.24 lb	M
Structure	1.38 lb	E
Total	3.06 lb	

*M - Manufacturer C - Calculated W - Weighed E - Estimated

POWER

Step-Dwell	5.4 W
Retrace and Slewing	18.0 W
Overall Average	6.6 W

UNCOMPENSATED ANGULAR MOMENTUM - LONG TERM

With continuous rotation thru calibration positions	0.375 lb-in-s*
With reversed rotation to and from calibration positions	-0-

* Occurs 1.25% of the time.

ELECTRICAL DRIVE

Drive Efficiency	
Size	3.0 in. dia. x 0.5 in. long
Weight	3.2 lb

SECTION 6
DRIVE CIRCUIT DESIGN

Evaluation of Candidate Excitation Methods for the Scan Motor 6-0
Performance of the Recommended Bipolar Single-Phase Method..... 6-2
Functional Description of Scan Logic Circuit 6-4
Functional Description of Breadboard Drive Circuit..... 6-6
Redundant Design of Scan Drive Circuit..... 6-8
Analysis of Power Requirements..... 6-10

EVALUATION OF CANDIDATE EXCITATION METHODS FOR THE SCAN MOTOR

A comparison of stepping motor excitation methods shows that the bipolar single-phase drive method provides a good torque output with moderate consumption and complexity.

Stepping motors provide discrete, incremental rotation in response to a pulsed input applied to the motor windings. Permanent-magnet stepping motors can be driven in several ways. The method for exciting themotor windings affects the efficiency, power consumption, speed, and torque characteristics. Five commonly used excitation techniques were evaluated: (1) unipolar, dual phase; (2) unipolar, single phase; (3) bipolar, dual phase; (4) bipolar, single phase; and (5) series, all windings. Unipolar techniques (1 and 2) provide current flow in one direction through the select excitation winding; while bipolar excitation provides current flow in both directions. Dual-phase excitation implies that two excitation phases are excited in parallel, while the single phase excitation methods excite only one coil or a series-connected coil.

Significant Characteristics of Excitation Methods - A tabulation of the five excitation methods is shown in the facing table. Power dissipation among the methods varies widely. Assuming Method 1 as a 100% reference, the relative power consumption is 100%, 70%, 50%, 35%, and 25% for Method 1 through 5, respectively.

Comparison of the ampere turns developed by each method affords a measure of the motor performance characteristics. Assuming Method 1 as a 100% reference, the relative values are 100%, 70%, 100%, 70% and 50% for Methods 1 through 5.

An efficiency factor is defined to relate the amount of power required per ampere turn (P/AT). The relative values are 1.4, 1.0, 0.7, 0.5 and 0.35 for Methods 1 through 5. Method 1 is the least efficient for convering power into usable ampere turns; while Method 5 is the most efficient.

Complexity of the drive circuitry required to synthesize the excitation methods was considered. The order is as follows; Method 2, 1, 4, 3 and 5, where Method 2 is the least complex.

Advantages and Disadvantages of Each Method - Method 1 (Unipolar, dual phase) develops the best motor characteristics, but at a high cost in power consumption. This method has the poorest conversion efficiency of all the methods.

Method 2 (Unipolar, single phase) develops good motor characteristics (similar to Method 4) at a reasonable power level. A very simple drive circuit can be used; in fact, this method is employed on the ITPR experiment. Power conversion efficiency is better than Method 1 but poorer than the other methods.

Method 3 (Bipolar, dual phase) develops the same motor characteristics as Method 1 at half the power. Power conversion efficiency is better than that of Methods 1 and 2, but poorer than that of theother methods. The drive circuit is more complex than either Methods 1, 2, or 4.

Method 4 (Bipolar, single phase) develops the same motor characteristics as Method 2 at half the power. Power conversion efficiency is better than that of all but Method 5. Drive circuit complexity is greater than either of the unipolar circuits; but not excessively complex.

Method 5 (All windings) dissipates the least circuit of power and provides the best power conversion efficiency, yet yields the poorest motor performance characteristics. A very complex drive circuit is required to produce the excitation sequence.

GULTON INDUSTRIES, INC.
Data System Division
R. G. Day

COMPARISON OF CANDIDATE MOTOR EXCITATION METHODS

Method	Method 1 Unipolar, Dual Phase	Method 2 Unipolar Single Ø	Method 3 Unipolar Dual Ø	Method 4 Bipolar Single Ø	Method 5 All Windings
Excitation Mode	(A+D) (A+C) (B+C) (B+D)	(A) (C) (B) (D)	(AB+CD) (AB+DC) (BA+DC) (BA+CD)	(AB) (CD) (BA) (DC)	(ABCD) (ABDC) (BADC) (BACD)
(A) Amp-Turns A. T. = $N_t N_t$	$I = \frac{V}{R}$ $\sum AT = NI\phi_1 + NI\phi_2$ $AT = \frac{1.4\ NV}{R}$	$I = \frac{V}{R}$ $\sum AT = \frac{NV}{R}$ $AT = \frac{NV}{R}$	$I = \frac{V}{2R}$ $\sum AT = \frac{2NV}{2R} \frac{+2NV}{2R}$ $AT = \frac{1.4\ NV}{R}$	$I = \frac{V}{2R}$ $\sum AT = \frac{2NV}{2R}$ $AT = \frac{NV}{R}$	$I = \frac{V}{4R}$ $\sum AT = \frac{2NV}{4R} \frac{+2NV}{4R}$ $AT = \frac{0.7\ NV}{R}$
(B) $\sum$ Power $P_t = V_t I_t$	$P_t = V\ I$ $P_t = \frac{2V^2}{R}$	$P_t = V_t I_t$ $P_t = \frac{V^2}{R}$	$P_t = V \frac{2V}{2R}$ $P_t = \frac{V^2}{R}$	$P_t = V_t I$ $P_t = \frac{V^2}{2R}$	$P_t = V_t I_t$ $P_t = \frac{V^2}{4R}$
(C) Eff. Factor	$F_1 = \frac{\frac{2V^2}{R}}{\frac{1.4\ NV}{R}}$ $F_1 = \frac{1.4\ V}{N}$	$F_2 = \frac{\frac{V^2}{R}}{\frac{NV}{R}}$ $F_2 = \frac{(1)\ V}{N}$	$F_3 = \frac{\frac{V^2}{R}}{\frac{1.4\ NV}{R}}$ $F_3 = \frac{(0.7)\ V}{N}$	$F_4 = \frac{\frac{V^2}{2R}}{\frac{NV}{R}}$ $F_4 = \frac{(0.5)\ V}{N}$	$F_5 = \frac{\frac{V^2}{4R}}{\frac{0.7\ NV}{R}}$ $F_5 = \frac{(0.35)\ V}{N}$
(D) % Power required Based on F_1 as 100%	Assumed 100% $\%P_1 = 100\%$	$\%\ P_2 = \frac{1.0}{1.4}$ $\%P_2 = 70\%$	$\%P_3 = \frac{0.7}{1.4}$ $\%P_3 = 50\%$	$\%P_4 = \frac{0.5}{1.4}$ $\%P_4 = 35\%$	$\%P_5 = \frac{0.35}{1.4}$ $\%P_5 = 25\%$

PERFORMANCE OF THE RECOMMENDED BIPOLAR SINGLE-PHASE METHOD

The recommended bipolar single-phase drive method was used in the scanner breadboard and provided the torque needed to meet the retrace and 50 ms requirements with an acceptable power consumption.

Excitation Method 4 (Bipolar, single phase) is recommended for driving the BSU scan motor. A timing diagram illustrating the phasing of the four drive signals (A, B, C and D) is presented in Figure A. A simplified equivalent switching circuit is shown in Figure B. Note that the sequential closure (ground) of switches B, D, A, and C causes current flow through coils AB, CD, B, A, and DC, respectively. Motor rotation direction is controlled by theorder of the sequence; i.e., BDAC for one direction, and CADB for the reverse direction.

Motor Response - Data obtained for an actual scan motor using Method 4 excitation verifies the low power consumption; however, the speed response was slightly less than anticipated. This characteristic is due primarily to the fact that the motor winding time constant is doubled in this configuration. Improvements in this characteristic are obtained by applying power for a longer duration.

Excitation for Retrace Cycle - During the retrace portion of the data scan, the motor excitation pulse width will be maintained at 10 ms and the stepping rate will be 100 pps. The breadboard scan mechanism was tested using this drive method to speeds of 115 pps.

Excitation Signals for Drive Cycle - During the data scan, the motor must step and settle within 50 ms, and the step rate must be 10 pps. Various excitation pulse widths and sequences were used to drive the scan mechanism in order to obtain an optimum value. An excitation time of 10 ms followed by a 20-ms off period and a 20-ms on period provided good speed, damping, and power performance characteristics.

1110-102-23

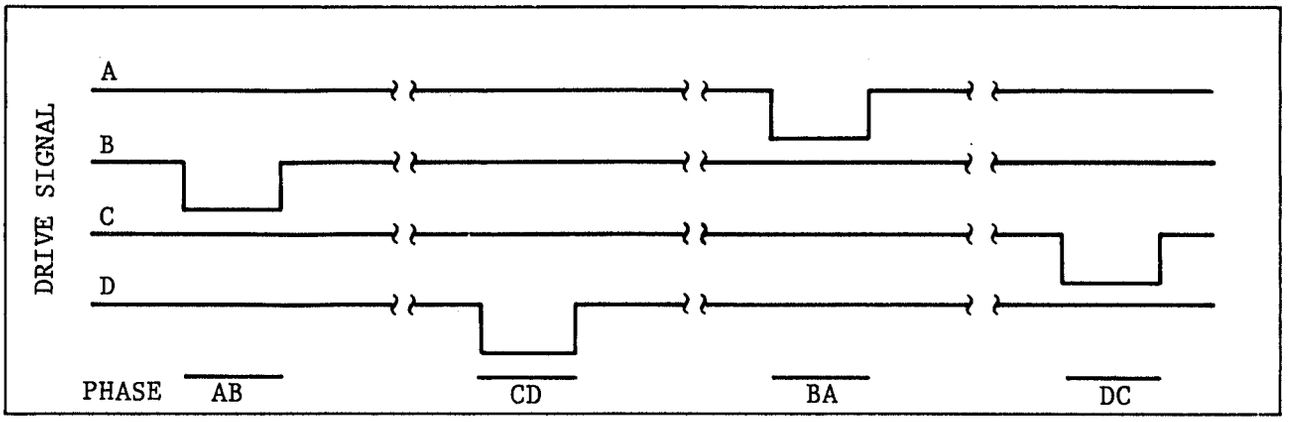

TIMING DIAGRAM FOR DRIVE SIGNALS

1110-102-32

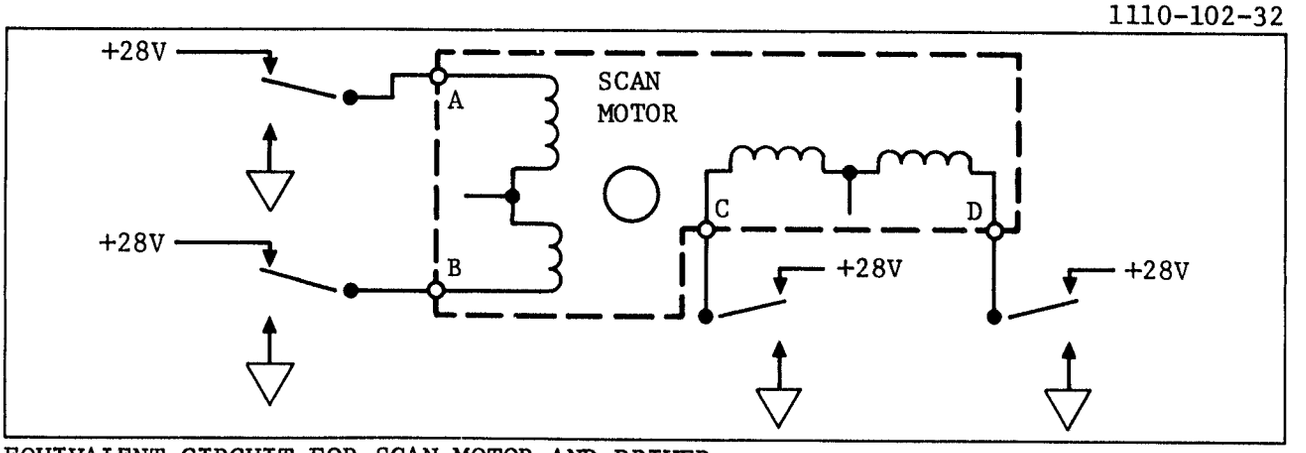

EQUIVALENT CIRCUIT FOR SCAN MOTOR AND DRIVER

FUNCTIONAL DESCRIPTION OF SCAN LOGIC CIRCUIT

The logic required to generate the scan and retrace requires a position counter a two-bit up/down counter to select the motor phase, and a scan-retrace rate selection logic.

Scan Logic - A simplified block diagram of the scan logic is shown in the figure. Logic consists of five basic elements: (1) - 10 step-rate scaler, (2) step-rate selector switch, (3) - 72 position scaler, (4) up/down phase counter, and (5) direction control flip flop.

Circuitry used to synchronize the scan logic is not shown; nor is the logic used to position the scan mechanism at the blackbody or space position. These functions are omitted for clarity purposes; however, their implementation is a simple digital logic network.

Forward scan action is accomplished in 72 steps at a 100-ms step rate. Retrace is performed in a similar manner at a 10-ms step rate. Direction of scan is controlled by the four-state, up/down counter which generates the scan motor drive signal.

Position Counter - A 72-position counter is used to keep track of the FOV. A scan motor position encoder plus the TIP frame sync signal are used to initalize the - 72 scaler to the first FOV and set the scan mode flip flop to the forward direction.

The position counter is advanced one count per step. During the forward scan cycle, an advance rate of 10 pps is maintained until the position counter recycles from a count of 72 back to 0. This action sets the scan mode flip flop to the retrace position, and the advance rate is switched to 100 pps.

Scan Motor Drive Counter - A four-state, up/down counter generates the scan motor excitation signals A, B, C, and D. The direction of scan motor rotation is determined by the order in which the excitation signals are applied; i.e., forward scan requires the sequence BDAC, and retrace requires the sequence CADB.

The up/down counter generates precisely these sequences: where the UP mode corresponds to the forward scan and the DOWN mode corresponds to the retrace. The UP/DOWN mode is controlled directly from the Forward/Retrace flip flop.

Outputs from the UP/DOWN counter are gated with the position counter advance signals to develop the desired scan motor excitation pulse width. During the forward scan, a 30-ms pulse width is used, whereas a 10-ms pulse width is required during retrace.

Scan-Retrace Selector Logic - Selection logic is simply the AND/OR function, which is used to select the scan rate of 100 pps or 10 pps. The scan mode flip flop (Forward/Retrace) acts as the control signal. A prescaler (÷ 10) is employed to develop the 10 pps scan rate frequency directly from the 100 pps. This technique ensures that the proper phased signal is always available.

1110-102-24

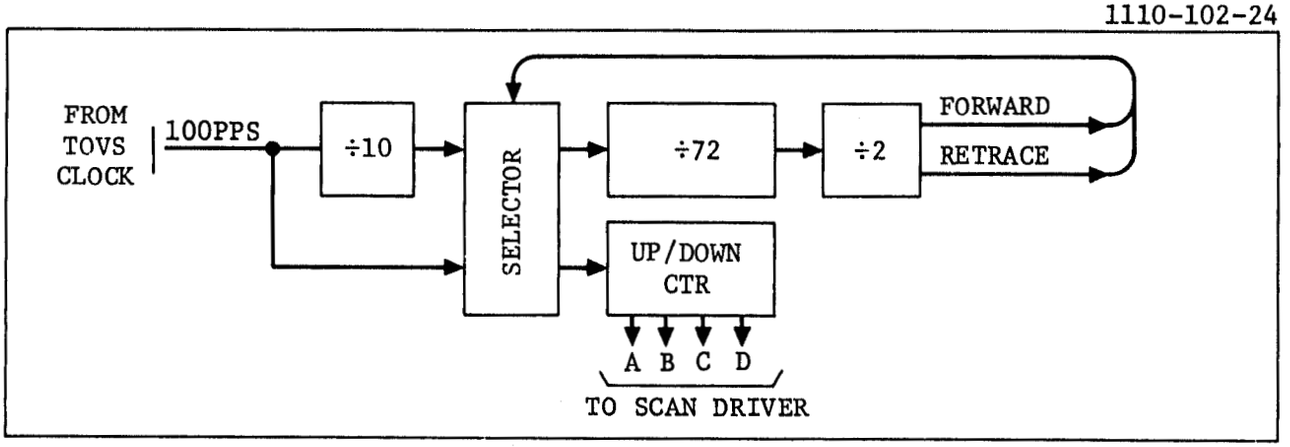

BLOCK DIAGRAM OF SCAN LOGIC

FUNCTIONAL DESCRIPTION OF BREADBOARD DRIVE CIRCUIT

The drive circuit used for the scanner breadboard was a bridge circuit consisting of two complementary switches in a single-pole, double-throw configuration.

Drive Circuit - A drive circuit is required to interface between the scan motor and the scan motor logic. Requirements placed upon the scan motor drive circuit are as follows:

- Sink and supply 700 mA of current to an inductive load.
- Operate from a supply voltage (Vcc) of +28 Vdc.
- Dissipate low power during standby active periods.
- Compatible with low-power logic components.

The selected circuit which meets all these requirements is shown in the figure. Note that the circuit is complementary in nature and acts as a single-pole, double-throw switch, connecting either the 28-Vdc power or the ground bus to the output.

Circuit Description - The scan motor drive circuit uses a Darlington connection (Q1 & Q3) to achieve the high current gain required to buffer the low-power logic drive signal to the high current required by the load. A discrete transistor invertor stage (not shown) is used as a voltage gain to shift from logic levels (5 Vdc max.) to the 28-Vdc drive signal level. Output power transistor Q3 is protected from inductive overshoot by diode CR1. Associated biasing resistor values were selected for a worst-cast analysis. Note that the normal ON condition (output at 28V) is achieved, since the input at terminal (1) is normally near ground.

The lower section of the drive circuit uses an emitter-follower circuit (Q2) to drive the output power transistor (Q4) into saturation. Diode CR4 provides protection against the inductive overshoot. Capacitor C1 ensures that a break-before-make condition exists during turn ON. Input drive signal is obtained from the low-power logic.

A summary of the static transistor parameters illustrate the circuit capa capabilities:

Transistor	$(V_{CE})_{SAT}$,	h_{FE} @	$I_{C(mA)}$	P_D	V_{CEO}
2N2222A	0.3	100	150	0.5	50
2N2907A	0.4	100	150	0.4	60
2N5154	0.2	100	700	11.5	80

The basic power handling transistor is the 2N5154. This device is constructed using the double-diffused planar epitaxial process, and is well suited for this type of application.

Comparison With ITPR Circuit - The drive circuit used on ITPR was essentially a single-pole, single-throw switch used to apply -26 Vdc or open circuit to the output. Component redundancy (series and parallel) was employed for all current handling devices. The table opposite compares the BSU breadboard and ITPR characteristics.

COMPARISON OF BSU BREADBOARD WITH ITPR

	ITPR	BSU Breadboard
Drive Method	Unipolar, Single Phase	Bipolar, Single Phase
Switch Type	SPST	SPDT
Load Current	-870 mA	±700 mA, peak
Component Redundancy	Yes	No
Max. Rep. Rate (retrace)	100 pps	100 pps
Power ON/step period	40 ms/400 ms	30 ms/100 ms
Duty Cycle	0.1	0.3
Peak Power	22.5 W	19.6 W
Power/Scan Step (average)	2.25 W	5.88 W
Operating Voltage	-26 Vdc	+28 Vdc
No. of Drivers Required	4	4

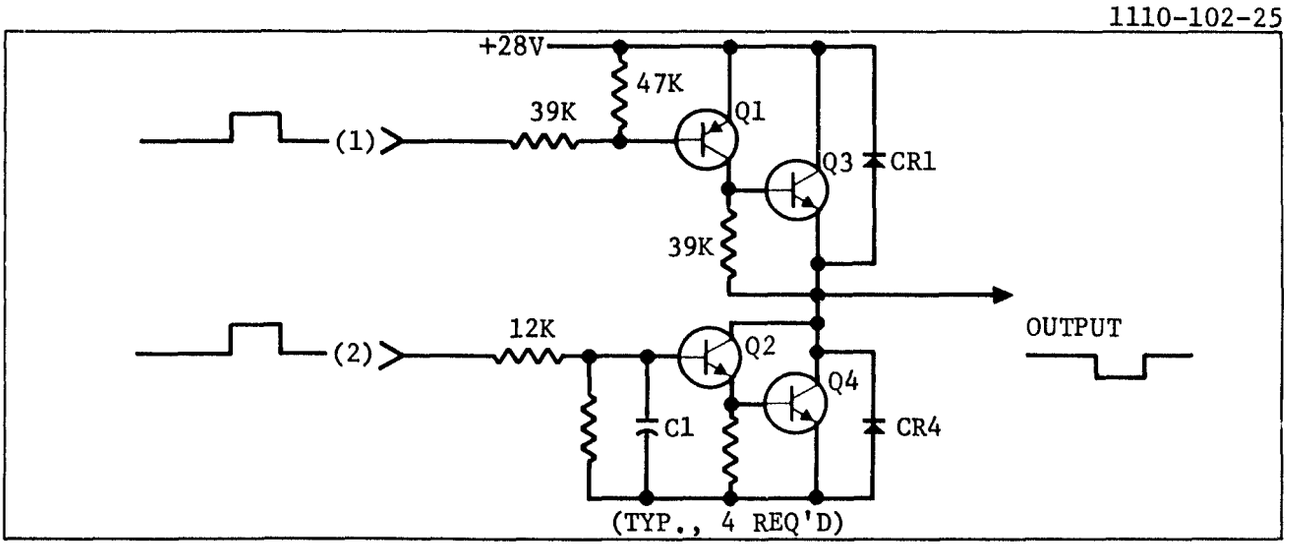

SIMPLIFIED SCHEMATIC
SCAN MOTOR DRIVE CIRCUIT

REDUNDANT DESIGN OF SCAN DRIVE CIRCUIT

Of the methods investigated to achieve component redundancy in the scan drive circuit, the series/parallel was selected because it works whether there is a short or an open component.

Component redundancy can be used to enhance the reliability of the drive circuit. Four types of component redundancy were considered:

Method A: Independent Dual Drive Circuits - A space craft command would be used to select the desired driver.
Method B: Series Redundant Drive Circuits - This circuit will operate properly for single-point failures which result in short circuits between collector and emitter.
Method C: Parallel Redundant Drive Circuit - This circuit will operate properly for single-point failures which result in open circuits between collector and emitter.
Method D: Series/Parallel Redundant Drive Circuit - This circuit will operate properly for single-point failures of either an open or short characteristic.

Figure A is a simplified switching diagram illustrating Methods A, B, and C. Method D is shown in Figure D. A ranking of circuit complexity is as follows:

(1) Least Complex: Method B & C
(2) More Complex: Method A
(3) Most Complex: Method D

Component redundancy Method D is recommended for the BSU scan drive circuit. An implementation of Method D (or B) is shown in Figure C.

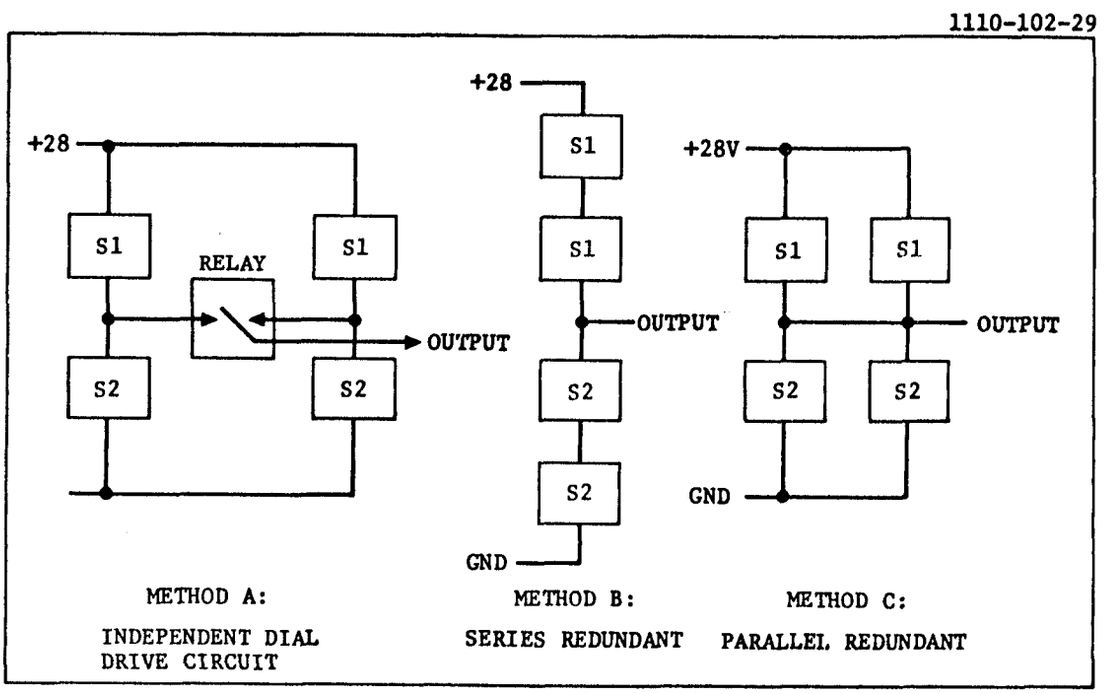

A. COMPONENT REDUNDANCY METHODS

1110-102-28

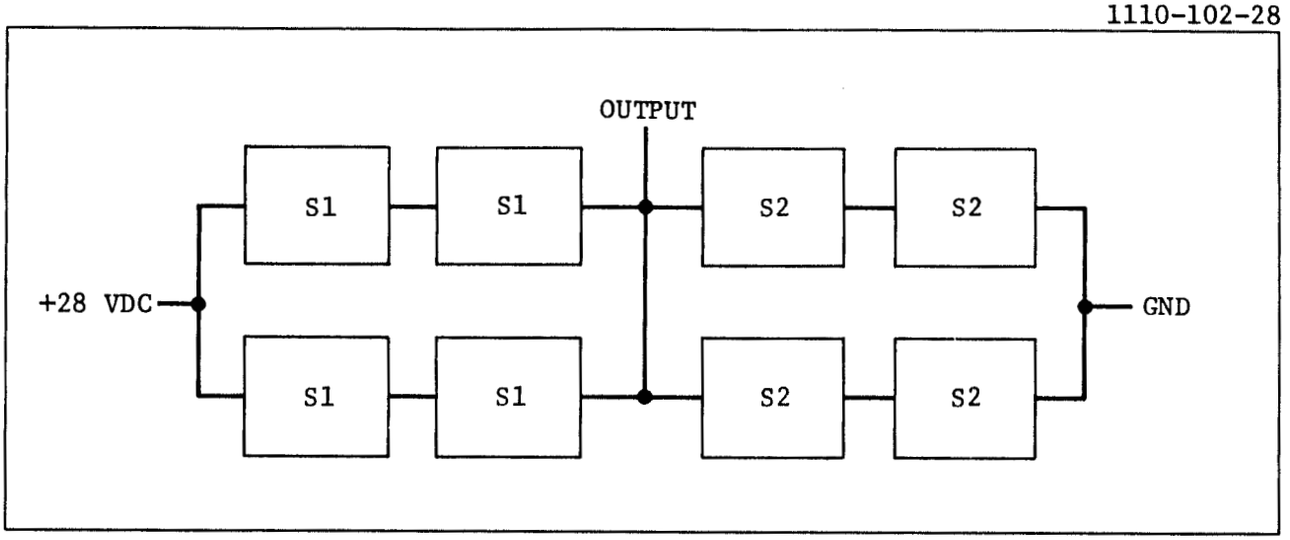

B. METHOD D: **SERIES/PARALLEL REDUNDANT**

1110-102-30

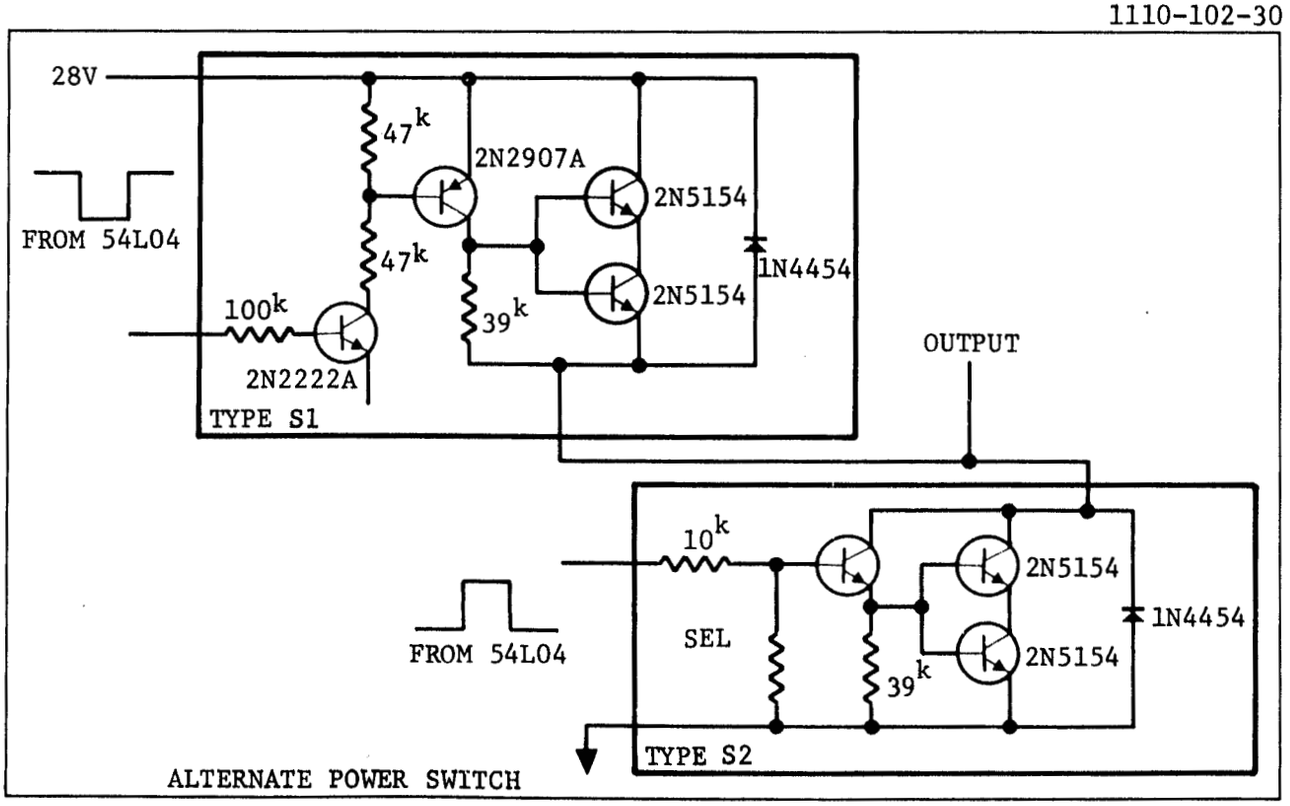

C. CIRCUIT **IMPLEMENTATION OF METHOD D**

ANALYSIS OF POWER REQUIREMENTS

The average power required by the scanner is 7.25 W, which because of power supply and drive circuit losses becomes W at the spacecraft bus. The transient load during step and retrace because of its size and low frequency content, cannot be filtered effectively and will be reflected to the spacecraft.

Power Requirements - Power is dissipated in three (3) functional elements; i.e. 1) scan motor windings, 2) motor excitation drive circuits, and 3) scan mechanism control logic.

Power required to drive Compute Devices motor, Model 15P03 can be computed as a worst case value from $V^2/2R$; where V = 28 V and R = 20 . Secondary effects of back emf and inductance are neglected in order to obtain a limiting value. Peak power dissipated within the motor coil is 19.6 watts.

Power losses within the motor excitation drive circuit amounts to 1.7 W, maximum, peak instantaneous. This loss is due primarily to the motor excitation current flowing through the output driver transistors.

Scan motor control logic dissipates approximately 0.20 W. This is a constant power drain required to keep the scan motor logic active at all times.

Power Dissipation per Cycle - A duty cycle factor is applied to compute the average power required per step; since scan motor power is applied for only 30 msec/step during the scan mode and 10 ms/step during the retrace mode.

The duty cycle factor for the combined scan/retrace cycle is 0.36. This number was obtained from this ratio:

T_1/T_2 where:

T_1 = total time power is applied to motor (2.88 sec)

T_2 = scan/retrace period (8.00 sec)

The average power dissipated per scan/retrace cycle is 7.52 W. A plot of the average power versus time is shown in the visual plan as Figure A.

The power profile required to complete the entire scan cycle (data plus calibration) is shown in Figure B. Thirty-one (31) scan retrace cycles, plus one calibration cycles are completed on a 256 second period. Average power for scan and retrace is 8.80 W, while the average dissipation during the calibration interval is 7.35 W. Combining these values yield as a total of 8.81 W average for the entire scan mechanism and drive circuit.

TOVS BSU Power Supply Effects - TOVS power supply efficiency will effect the actual input power required to drive the scan mechanism. Peak power loads will be directly reflected as current demands from the primary spacecraft power system. Assuming a power conversion efficiency of 78% including drive circuit losses yields an input power of 8.81 W, average. The peak requirements is 21.4 W for as long as 1.24 sec. during the scan return from housing calibration.

Very little power smoothing (averaging) will occur since the power supply filters do not afford sufficient energy storage. Hence, the total load power requirement is reflected directly upon the s/c battery.

1110-102-26

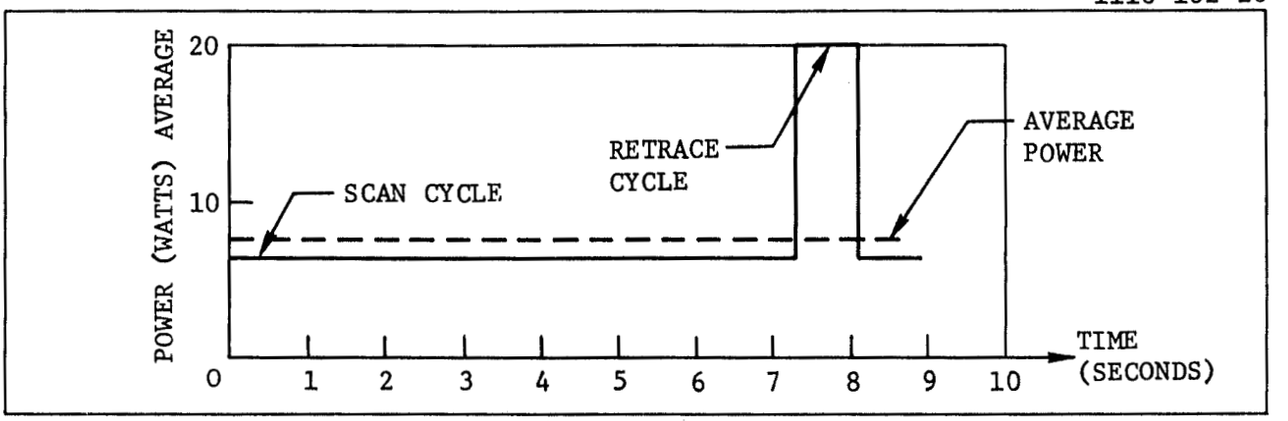

FIGURE A. POWER PROFILE FOR SCAN/RETRACE CYCLE

1110-102-33

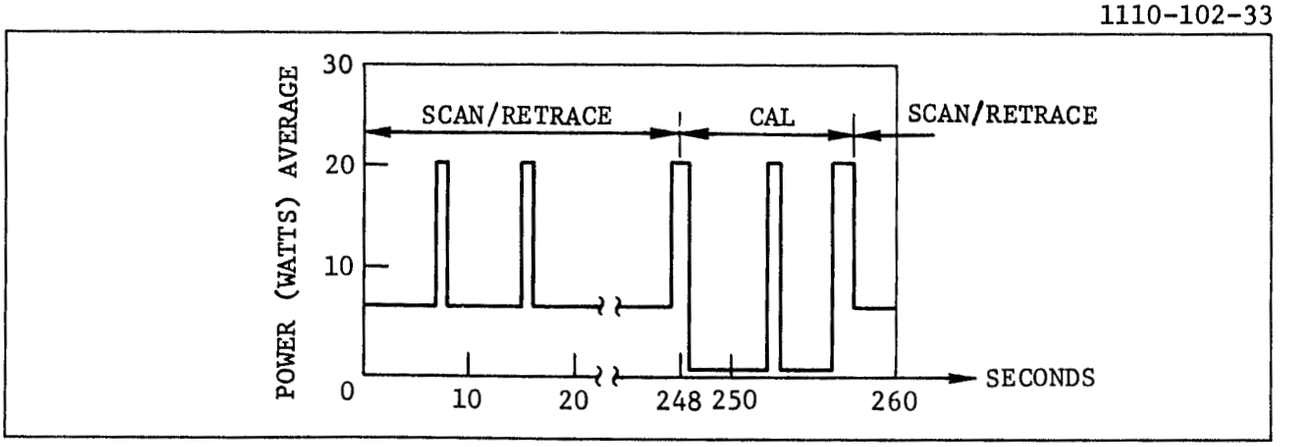

FIGURE B. POWER PROFILE FOR DATA/CAL CYCLE

SECTION 7
PRODUCT ASSURANCE

Summary of Scanner Reliability Study Effort 7-0
Prediction of Scanner Reliability..... 7-2
Review of Scanner Portion of FMECA 7-4
Review of Drive Circuit Portion of FMECA 7-6

SUMMARY OF SCANNER RELIABILITY STUDY EFFORT

The Scanner Reliability Study included: performance of a Stress Analysis/Reliability Prediction, development of a Reliability Math Model, and Execution of a Failure Mode, Effect, and Criticality Analysis that defined the action necessary to reduce the probability of scanner failure.

One of the major BSU scanner requirements was a Reliability study of the scan mechanism and drive circuit. This topic discusses the various facets of the study that the Reliability staff completed.

In order to predict the reliability and life expectancy of the scan mechanism and drive circuit, a Reliability Block Diagram was devised which was then used to develop a Reliability Math Model. The techniques used in making the prediction included stress analysis and determination of failure-rates for the various components of the scan mechanism and drive circuit. The results of the prediction analysis indicate that the design is acceptable, and give confidence that the scan mechanism and drive circuit will have a life expectancy in excess of the two-year mission objective. A detailed treatment of the Prediction Analysis is given in the following topic of this section.

A complete failure mode, effect, and criticality analysis (FMECA) of the scan mechanism and drive circuit was performed, and the worksheets are exhibited in Appendix A to this report for reference purposes. Additionally, a detailed review of the FMECA is presented in the third topic of this section. This complete analysis points out the failure modes and discloses the failure effect, alternate modes of operation, and the criticality; under the "Remarks" heading, the steps are described which must be taken to reduce the probability of failure. The disclosure of critical areas is extremely important since it reveals the areas which require the most attention.

As a result of the FMECA, the Quality Assurance/Reliability team devised a preliminary plan to assure the reliability of the scan mechanism and drive circuit, the details of which are provided in Section 8, Conclusions. The main elements of the plan (subsequent to the design phase) are manufacturing controls and screening/qualification testing. The manufacturing controls will be embodied in the procurement specifications, which will include compliance with the applicable requirements of NASA Publication NHB 5300.4(1B) "Quality Program Provisions for Acronautical and Space System Contractors." Special attention will be given to the selection of space-qualified lubricants, clean-room procedures and lot control/traceability.

The remainder of this section of the report discusses in detail the Prediction of Scanner Reliability and the FMECA. A discussion of the procedures that will be employed to ensure the reliability of the Scanner are in Section 8, Conclusions.

MAJOR RELIABILITY STUDY EFFORT TASKS

Engineering/Product Assurance Design Reviews

- Possible failure modes identified.
- Design improvements made to reduce failure probability.

Prediction of Scan Mechanism Reliability

- Reliability Block Diagram drawn up.
- Math Model formulated.
- Failure rates determined.

Failure Mode, Effect, and Criticality Analysis

- Detailed worksheets generated.
- Critical areas disclosed.
- Actions required to reduce probability of failure defined.

Creation of Reliability Assurance Plan

- Manufacturing Control requirements.
- Screening/Qualification Testing requirements.
- NASA Publication NHB 5300.4(1B) requirements.

PREDICTION OF SCANNER RELIABILITY

The reliability prediction for the scan mechanism included drawing up a Reliability Block Diagram developing a Reliability Math Model, and considering the life expectancy of the component parts of the mechanism.

Basically, the reliability prediction for the scan mechanism was obtained by estimating the failure rates for its component parts. However, since life expectancy is equally important, this topic also discusses those inherent reliability characteristics that increase the probability that the life expectancy of the scan mechanism will exceed the two-year mission objective.

Prediction - As indicated by the Reliability Block Diagram, the component relationships are serial, since the failure of any one of the items would cause the mechanism to fail. The estimated failure rates for each item were determined on the basis discussed below, and these rates were then used to develop the Reliability Math Model. As the model indicates the predicted failure rate (failure per million hours) for the the entire scan mechanism is 2.2 FPMH+λB+λD.

The failure rate for the scan motor was obtained from the failure rate source MIL-HDBK-217A. The failure rate for the harmonic drive was estimated on the following basis.

λ(Wave Generator) = 0.9 FPMH
λ(Flex Spline) = not known
λ(Output Shaft) = 0.01 FPMH

The failure rate for the encoder was estimated to be 1.6 FPMH on the basis of data contained in the TOVS-BSU System Report. The failure rate for the scan mirror is not known. However, experience with similarly coated optical devices indicates that the failure rate will be extremely low.

History - Since the mission time life is more than two years, the following discussion is submitted to indicate the reliability and life expectancy inherent in the scan mechanism component parts. Life tests of pin encoders have been performed by Litton Encoder Division.

The tests were performed on 13-track, size-11 encoders rotating at 100 r/min, reversing direction every 15 minutes, for over 18 x 10^6 rotations. The tests showed one failure due to a bad ball bearing in one of the encoders at 13.9 x 10^6 rotations; six other encoders were stopped between 18.51 and 20 million rotations; and one failure was due to an intermittant short between contacts at 12 x 10^6 rotations. (For reference see Litton Encoder Division DOE 67 057).

The hotspot temperature of the scan motor is expected to be 65°C or less. From Figure 7.7.2 of MIL-HDBK-217A, Reliability Stress and Failure Rate Data for Electronic Equipment, the electrical failure rate for Class H wire insulation is 0.2 FPMH. The mechanical failure rate, from Figure 7.8.1 of MIL-HDBK-217A, is 0.4 FPMH (RPM is less than 1000). Harmonic drive assemblies have been used in a number of space applications.

They have undergone environmental testing and are currently being evaluated and incorporated in designs by other aerospace companies. A summary of a life test report from Aerojet General Corporation on a harmonic drive configuration similar to the one that will be used for the BSU is included in Appendix A of "Scan Motor Selection Summary for Infrared Temperature Profile Radiometer", Beckman Document No. DA-2606-701, submitted to Gulton DSD, dated 1-30-70.

The scan mirror configuration will be machined and subjected to thermal cycling to relieve all residual stresses resulting from the machining operation. The design of the mirror will include a structural analysis to show that the mirror deflections under vibration and acceleration loads will limit the stresses to less than half of the elastic limit of the material. The ball bearings utilized with the scan mirror assembly will be cleaned per approved NESC procedure and lubricated with a space qualified lubricant.

1110-102-38

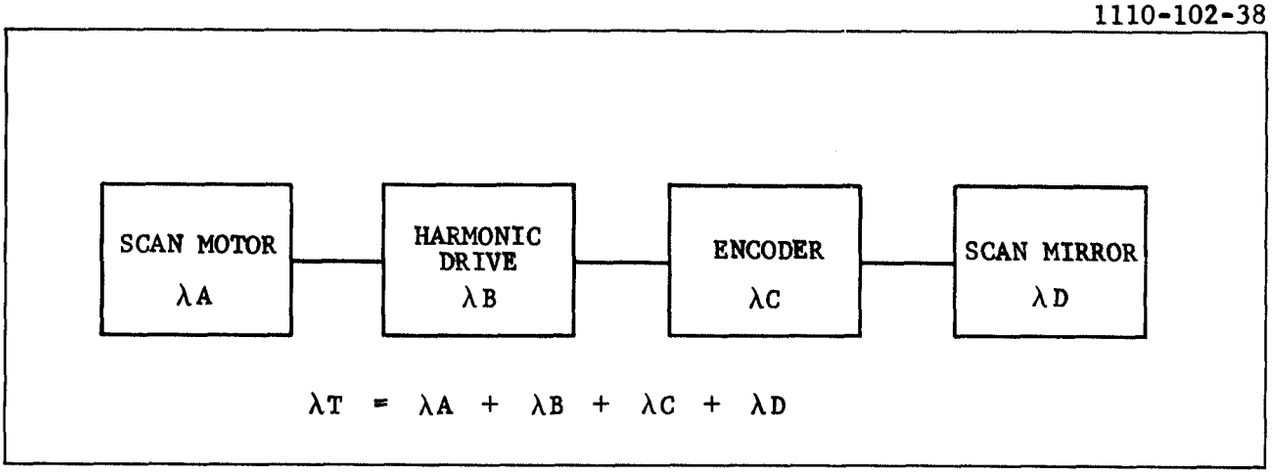

RELIABILITY BLOCK DIAGRAM. See Reliability Math Model below for Details.

RELIABILITY MATH MODEL

$$\lambda T = \lambda A + \lambda B + \lambda C + \lambda D$$

where: λT = TOTAL FAILURE RATE IN FAILURES PER MILLION HOURS (FPMH) FOR SCAN MECHANISM

λA = FAILURE RATE FOR SCAN MOTOR

λB = FAILURE RATE FOR HARMONIC DRIVE

λC = FAILURE RATE FOR ENCODER

λD = FAILURE RATE FOR SCAN MIRROR

therefore:

$$\lambda T = 0.6 + \lambda B + 1.6 + \lambda D$$

$$= 2.2 \text{ FPMH} + \lambda B + \lambda D$$

REVIEW OF SCANNER PORTION OF FMECA

Performance of the Failure Mode, Effect, and Criticality Analysis revealed those critical failure modes which required the specification of preventive measures to reduce the probability of their occurence.

The purpose of the Failure Mode, Effect, and Criticality Analysis (FMECA) that was generated for the scan mechanism was to discover the possible modes of failure and their effect on its performance and life expectancy. The main objective of the FMECA was to indicate the preventive measures that should be taken to reduce the probability of failure occurrence.

The Gulton DSD Failure Effect Analysis Form No. 13547F1 was used as the worksheet for presentation of the FMECA. See Appendix A of this report, for worksheets including Scan Motor, Harmonic Drive, Pin-Contact Shaft Angle Encoder and Scan Mirror; and Scan Motor Drive Circuit. The elements that had to be taken into consideration in order to perform the FMECA included the following for each item of the Scan Mechanism: function, failure mode, failure effect, alternative mode of operation, criticality of failure, probability of failure, and the preventive measures that should be taken to reduce the probability of failure (under the "Remarks" column).

Each item of the scan mechanism was evaluated separately. First the failure modes/failure mechanisms for each item were identified. This led to the determination of the effects that each failure mode would have on the performance of the scan mechanism. Then the most important part of the analysis was performed, which was the specification by the Product Assurance group of preventive measures required to reduce the probability of failure. The following paragraph includes some specific examples of the procedure described above.

One of the scan motor failure modes is "No Output", for which the failure effect is "Scan mirror cannot be driven through its 1.125-degree steps". The specified preventive measures were as follows, "The Scan Motor will be run-in for a minimum of 168 hours at $70^{o} \pm 2^{o}C$, and then will be subjected to rigorous qualification tests." Similarly, one of the failure modes of the encoder is, "Negligible"; and the specified preventive measure was the use of redundant pin-contacts which would ensure that the failure of one pin-contact would not affect the function of the encoder. One of the failure modes of the scan mirror is, "Reflective coating becomes degraded". The failure effect due to this failure mode is "Degradation of sensitivity of the Scan Mechanism". The preventive measure specified to reduce the probability of failure was the use of gold for the reflective coating since it is not subject to degradation by ultraviolet radiation.

The drive circuit uses redundant power handling components and has no critical single point failure modes. The FMECA for the drive circuit is included in Appendix A.

CRITICAL FAILURE MODES OF SCAN MECHANISM AND PREVENTIVE MEASURES THAT SHOULD BE TAKEN TO REDUCE PROBABILITY OF FAILURE

Critical Failure Modes	Preventive Measures
Scan Motor	
• No output	- Run-in (screening) - Qualification tests
Harmonic Drive	
• Fails to operate	- Run-in (screening) - Qualification tests
Encoder	
• Failure of two pin-contacts	- Qualification tests
Scan Mirror	
• Warping or distortion	- Stress relief by heat treatment after machining
• Reflective coating degradation	- Use of gold for reflective coating

REVIEW OF DRIVE CIRCUIT PORTION OF FMECA

A Failure Mode, Effect, and Criticality Analysis for the scan motor drive circuit indicated that a series/parallel circuit approach to achieve component redundancy would enable the circuit to function in all conceivable failure nodes except one, which can be corrected easily.

A Failure Mode, Effect, and Criticality Analysis worksheet for the scan motor circuit is provided in Appendix A. The circuit analyzed consisted of the S1 and S2 switches shown in Figure A and utilized in the configuration of Figure B. This analyis indicated that with one exception the circuit could function with all conceivable failure modes. The one exception that was uncovered was the failure effect associated with the shorting of R1. If R1 shorted, and the short remained in place, Q1 of the particular S1 switch could "hog" the current and render the other S1 switches inoperative (thus negating the effects of redundancy). The proposed solution is to add an emitter resistor for current limit of Q1. A similar effect could be obtained by using series redundant base drive resistors, R1A and R1B.

Another configuration, that shown in Figure C, serves to minimize the parts count. The S1 and S2 switches are as previously described. The factor to be considered here is the addition of the decision circuity (shown by the circle). In this event a failure of the output would have to be "sensed" and the other series pair selected. Failures can occur in the switching circuitry that are "single point" in nature and that would override the effects of the redundancy. From a reliability consideration, it would be preferable to utilize the Figure B configuration. From a power and volume standpoint, the Figure C configuration might be preferred.

1110-102-39

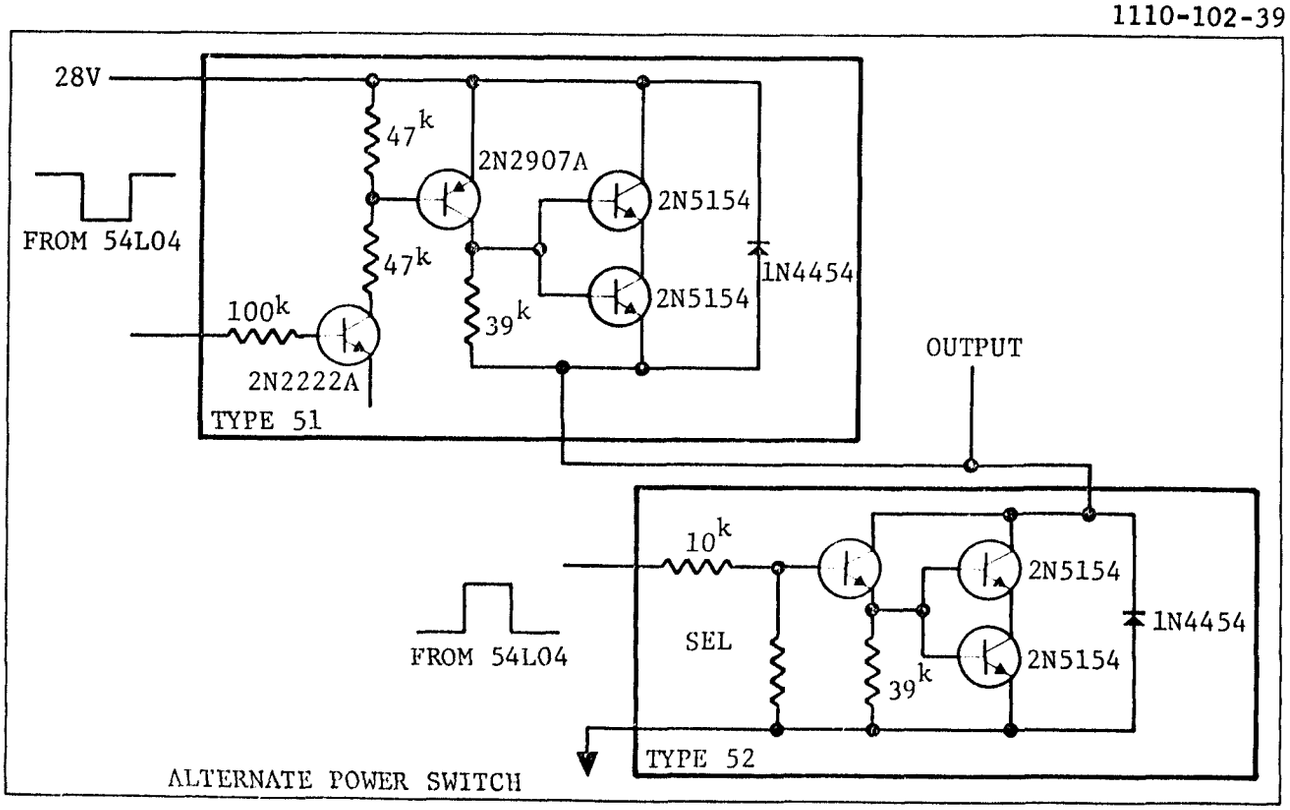

FIGURE A. CIRCUIT ANALYZED

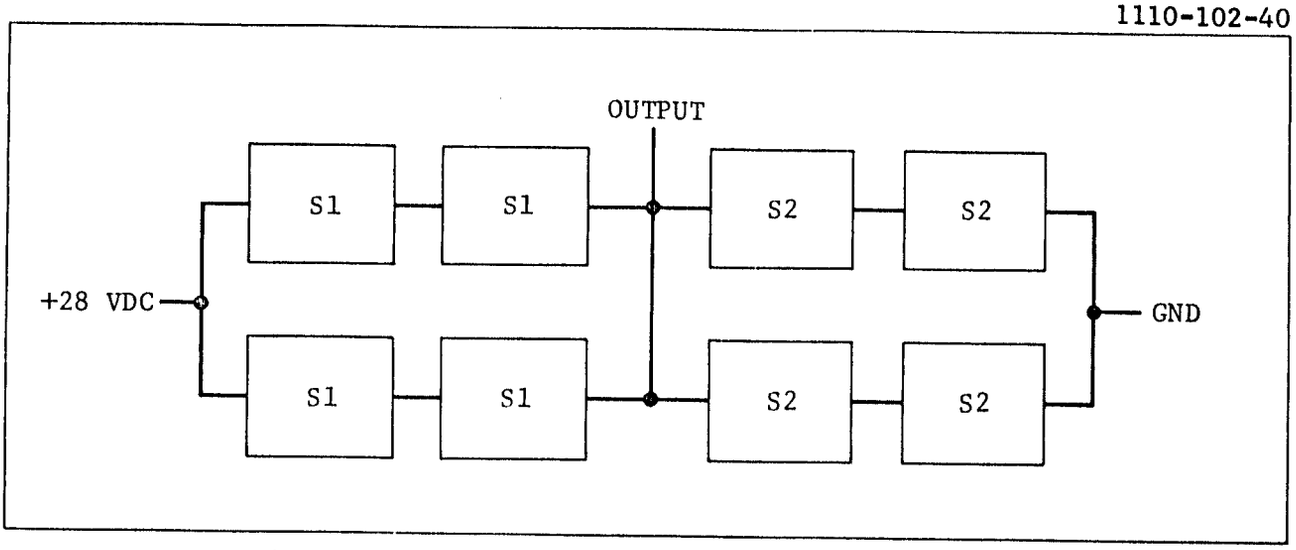

FIGURE B. SERIES/PARALLEL REDUNDANT CONFIGURATION

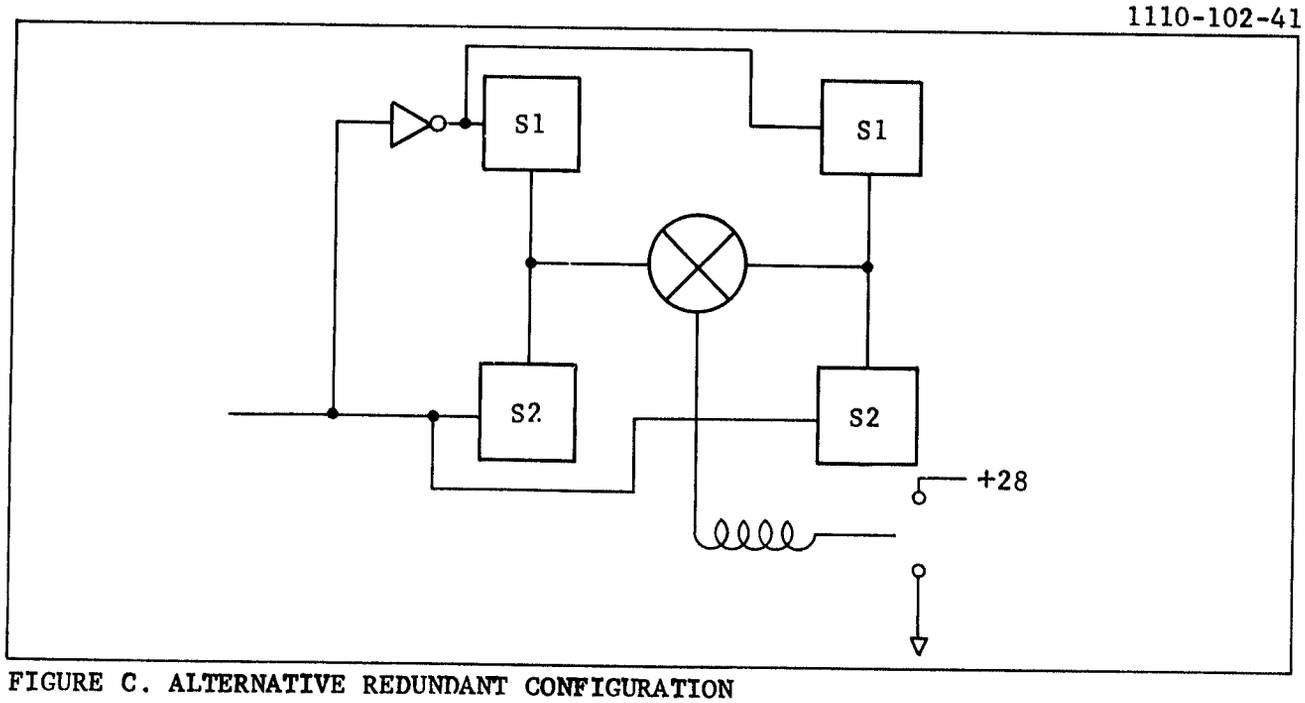

FIGURE C. ALTERNATIVE REDUNDANT CONFIGURATION

SECTION 8
CONCLUSIONS

Summary of Performance Attainable..... 8-0
Nature of Scanner Subsystem Interface Requirements..... 8-2
Plan to Assure Reliability of Scanner..... 8-4

SUMMARY OF PERFORMANCE ATTAINABLE

Both analysis and testing show that the use of a stepper motor and a low-inertia harmonic drive can meet the objectives of the TOVS-BSU scan sequence. The system can step and cross into the allowable error band in less than 40 ms using a 100 pps step rate, 2.6 oz-in. of driving torque, and an average of 7.10 W power.

The results of the scanner analysis and breadboard tests show that the scanner meets all performance objectives. The analysis was based on a commercially available size-15, 90-degree permanent magnet stepper motor and an 80:1 harmonic drive. The mock-up used a 100:1 drive with an inertial load scaled to provide the motor with a load equivalent to that which would be required with an 80:1 drive. A 30-percent margin on the load was included in test and analysis to allow for potential increase in mirror weight and the addition of a light shield.

The calculated response time and test performance of the breadboard met the required 50-ms response and 100-pps retrace rate. This performance can be improved to a 35-ms response time with a 100-pps drive by increasing motor torque output (more ampere turns) and detent torque, by adding dynamic braking to the drive circuit, or by retro-torquing.

The backlash of harmonic drives is normally 5 to 6 arc minutes, maximum. Units can be selected for 2 to 3 arc minutes, as required, to reduce free motion during the damped response.

The scanner power goal was set at less than 10 W. The required power is 7.10 W, based on a 30-percent duty cycle during the step-dwell period and a bipolar single-phase mode of motor operation.

The stepper motor, harmonic drive, and single-disc pin encoder resulted in the smallest drive assembly capable of meeting the performance objectives. Drive weight, not including the scan mirror, is 2.5 lb.

The projected life of the drive is based on meeting all performance requirements after two years in orbit, allowing for at least 2000 hours of preflight checkout and run-in. The low contact stresses (< 2,000 psi) of the drive and high quality stable film lubricant will provide the necessary high degree of confidence in the drive.

COMPARISON OF SCAN REQUIREMENTS AND ANALYTICAL OR TEST DATA DEVELOPED IN THIS STUDY

	Required	Calculated	Test
Response time (within $\pm 0.1^{\circ}$ of 1.125°)	50 ms	40 ms	50 ms
Retrace	100 pps		to 115 pps
Backlash	0.1°		0.05°
Power	10 W	7.10 W	8.0 W
Weight	3.5 lb	2.5 lb	
Operating Life	2 yrs + 2000 hr	2 yr	

NATURE OF SCANNER SUBSYSTEM INTERFACE REQUIREMENTS

The requirements applicable to the interface between the scanner subsystem and the instrument system are: mounting space, adequate mechanical strength and rigidity, optical accuracy, and low thermal resistance.

A mounting surface of appropriate dimensions and flatness must be provided for mounting the scanner. Also, clearance space for the scan mirror and for its beam over the range of look angles is needed, as detailed in the table on the facing page.

In actual instrument operation, the only mechanical stress on the interface is a small torque reaction due to scanner operation. This is so small--about 9 oz-in.--as to be negligible. However, in the launch condition and in environmental testing, considerable stresses are imposed. There are direct tensile, compressive, and shear forces on the joint, as well as bending induced in the scanner mounting web of the housing. The resisting moment necessary at the scanner-to-housing joint is 1500 lb-in. The scanner mounting screws must be sized to have a preload greater than any tensile force that can be imposed on them, including the resisting moment. Dowel pins to positively locate the assembly and take the shear forces are necessary also. These requirements are met with a pattern of three 3/16-inch-diameter bolts torqued to 11.0 in.-lb, and two 3/16-inch diameter pins installed at assembly.

The optical accuracy requirement concerns the pointing accuracy of the instrument's exit beam. The initial installation of the scanner subassembly must be accurate geometrically, and the design must allow it to be repositioned accurately when it is removed and reinstalled. This is achieved by the two 3/16-inch-diameter pins, which also take the shear loads. The pins are installed only after the scanner is aligned and clamped at initial assembly. Thereafter, no alignment is necessary, since the locating pins allow the scanner to be removed and accurately reinstalled as often as desired.

Because the heat of power dissipation in the scanner motor must cross the scanner-to-housing joint, there is a thermal interface requirement. This heat is disposed of, ultimately, at the external radiator panels, and it must follow conductive paths through the housing metal to get there. This heat conduction incurs a temperature drop of about 12°C, leaving an allowable temperature drop at the interface of 36°C, if the motor upper limit of 70°C is not to be exceeded. Since the average power involved is 8.2 w, the maximum allowable thermal resistance at the interface is 4.4°C/w. The design value of 1.0°C/w meets this requirement.

The scanner electrical interface involves the motor and shaft encoder. The motor driver requires an input of programmed pulses from the instrument logic and an input of dc power. Physical connection to the motor driver is through a Cannon MDB-7P connector. The pin-contact encoder is a passive device and requires no power input. Electrical connection to it is also through a Cannon-type multi-pin connector.

SCANNER SUBSYSTEM INTERFACE REQUIREMENTS

• Mounting Surface	-	3 mounting holes on 5-in.-dia. circle; surface flat within 0.005 in.
• Mirror Clearance	-	11.4 in. dia. x 12.0 in. length
• Mirror Beam Size	-	11.4 in. dia.
• Look Angles	-	71 degrees above nadir, anti-sum side
		42 degrees above nadir, sunside
• Resisting Moment of Support Structure	-	1500 lb/in.
• Assembly Features	-	Dowel pins installed in line-reamed holes to permit repeated accurate assembly and disassembly
• Scan Motor Power	-	8.5 w avg.; programmed 10 ms, 28-V pulses
• Thermal Resistance	-	4.4°C/w, maximum

PLAN TO ASSURE RELIABILITY OF SCANNER

The assurance of scan mechanism and drive circuit reliability is achieved by conducting Design Reviews to optimize the design concepts; enforcing Manufacturing Controls to ensure quality; and performing Screening and Qualification Testing to verify functional performance.

After the design phase -- which initiated the basis for reliability -- and the Failure Mode, Effects, and Criticality Analysis (FMECA) -- which indicated the action required to attain reliability -- the task of generating a plan to assure the reliability of the scan mechanism and drive circuit was completed. The main categories of the overall program devised to implement the plan are as follows: Design Review, Manufacturing Control, and Screening/Qualification Testing.

Design Review - Design reviews should be held at the supplier level where applicable. These reviews should beattended by a Reliability representative, and the supplier's final design should require approval by the Reliability and Quality Department.

Manufacturing Controls - Assurance of reliability during the fabrication phase is achieved by imposing rigid manufacturing controls on suppliers. This is accomplished by the generation of device procurement specifications, which should include the applicable requirements of NASA Publication NHB 5300.4(1B), "Quality Program Provisions for Acronautical and Space System Contractors." The elements of manufacturing control are listed on the facing page. Some of the major elements of the Manufacturing Control Program should be: a requirement that the suppliers shall submit Quality Control, Reliability, and Manufacturing Process Control plans which shall be approved by the Reliability and Quality Department prior to the start of fabrication; source inspection at the supplier's facility during fabrication and prior to shipment by Product Assurance personnel; and lot control/traceability of material. In addition, emphasis should be placed on the use of clean-room requirements as outlined in Federal Standard No. 2092, with the use of laminar-flow stations for assembly and inspection operations. Also, particular attention should be given to the selection and testing of space-qualified lubricants.

To further assure the reliability of the scan mechanism and drive circuit component devices, they should be subjected to rigorous screening and qualification testing. Specifically, the scan motor should be run in at 100 pps with a dynamic torque load of 3.5 in. or for a minimum of 84 hours in each direction (168 hours total) at a temperature of 70 $\pm 2^{o}C$. Following the run-in, without any adjustment or cleaning, the supplier is required to perform the acceptance testing (qualification test), prior to shipment. The harmonic drive should be run in at an input speed of 1500 r/min $\pm 2\%$ with an inertia load of 0.19 ± 0.02 lb-in.-s^2 at the output shaft. Rotation should be reversed every minute for a total running time of 168 hours at a temperature of 70 $\pm 2^{o}C$. And following the run-in, without any adjustment or cleaning, the supplier is required to perform the acceptance test (qualification test), prior to shipment. The pin-contact shaft encoder should be run in at 6.0 ± 1.0 r/min for a minimum of 84 hours in each direction (168 hours total minimum) at a temperature of $70^{o}C$. And following the run-in, without any adjustment or cleaning, the supplier will be required to perform the acceptance testing (qualification test), prior to shipment.

BECKMAN INSTRUMENTS, INC.
Advanced Technology Operations
J. L. Rosenbaum

ELEMENTS OF RELIABILITY ASSURANCE PROGRAM

Special emphasis will be given to the elements marked with an asterisk.

Design Review

- In-house design reviews.
- Supplier design reviews.

Manufacturing Controls

- NASA Document NHB 5300.4(1B) requirements.
- Quality Control Plan submittal by suppliers.
- Reliability Plan submittal by suppliers (when applicable).
- Manufacturing Process Control Plan submittal.
- Material Certification.
- Lot Control/Traceability.
- *• Clean Room conditions during assembly.
- Source Inspection during fabrication and prior to shipment.
- *• Space-Qualified Lubrication selection.

Screening and Qualification Testing

- *• Run-in testing (screening).
- *• Acceptance Test prior to shipment by supplier.
- Environmental testing.
- Insulation and dielectric tests.

APPENDIX A

TOVS-BSU FMECA WORKSHEETS

NOTES:
FAILURE MODE: O=Open, S=Short, D=Drift, CS=Set F/F, CR=Reset F/F
CI=Constant "1" Level, CO=Constant "0" Level, G=Gate Failure
+=Either Mode, NO=No Output, EO=Erroneous Output
DETECTABILITY: Y=Yes, P=Possibly, N=No
ALTERNATE MODE(S) OF OPERATION: N=None, D=Operate with Degradation
CORRECTIVE ACTION: R=Replace Unit

NOTES:
CRITICALITY/PROBABILITY FAILURE MODE ASSIGNMENTS (X_e & X_p)
A_e = 75% degraded to catastrophic
B_e = 50% to 75% degraded
C_e = 25% to 50% degraded
D_e = negligible to 25% degraded
E_e = no effect
A_p = 20% + of possible failures
B_p = 5-20% " " "
C_p = .5-5% " " "
D_p = .05-.5% " " "
E_p = < .05% " " "

Issue Date January 1973
Rev. ___ Date ___
Preliminary (X)
Final Issue ( )
Prepared by J. Rosenbaum, ATO

FAILURE EFFECT ANALYSIS
GULTON INDUSTRIES INC.
DATA SYSTEMS DIVISION

Contract GI No. ___
TOVS Basic Sounder Unit
Circuit ( )
Subsystem (X)
System ( )
Drawing No. ___
Code No. ___

ITEM	REF DESIG.	FUNCTION	FAILURE MODE	DETECT-ABILITY	FAILURE EFFECT	ALTERNATE MODE OF OPERATION	CORRECTIVE ACTION	X_e	X_p	REMARKS
Scanner Assembly	N/A	The function of the scanner assembly is to view earth, to view space and to view a housing blackbody reference for calibration. The assembly is made up of the scan motor, harmonic drive, pin-contact shaft encoder, and scan mirror.	N/A	N/A	N/A	N/A	N/A	N/A	N/A	For the components below, X_e is at the BSU level, and X_p is at the Scanner Assembly level.
Scan Motor	N/A	Provides power to harmonic drive for driving the scan mirror to achieve 1.125° steps.	1) No output due to open or shorted motor windings	Y	Scan mirror cannot be driven through its 1.125° steps.	N	R	A_e	B_p	The load presented to the motor will be small; the motor will be run-in for a minimum of 168 hours at 70° ±2°C prior to acceptance tests; and the motor will be subjected to rigorous screening and qualification tests.
			2) No output due to failure of bearing.	Y	Scan mirror cannot be driven through its 1.125° steps.	N	R	A_e	B_p	
			3) Inadequate torque output due to degrdation of motor performance characteristic.	Y	Scan program cannot be reliably and reproducibly achieved.	D	R	B_e	C_p	

1354771

NOTES:
FAILURE MODE: O=Open, S=Short, D=Drift, CS=Set F/F, CR=Reset F/F
C1=Constant "1" Level, CO=Constant "0" Level, G=Gate Failure
+=Either Mode, NO=No Output, EO=Erroneous Output
DETECTABILITY: Y=Yes, P=Possibly, N=No
ALTERNATE MODE(S) OF OPERATION: N=None, D=Operate with Degradation
CORRECTIVE ACTION: R=Replace Unit

NOTES:
CRITICALITY/PROBABILITY FAILURE MODE ASSIGNMENTS (X_e & X_p)
A_e = 75% degraded to catastrophic
B_e = 50% to 75% degraded
C_e = 25% to 50% degraded
D_e = negligible to 25% degraded
E_e = no effect
A_p = 20% + of possible failures
B_p = 5-20% " " "
C_p = .5-5% " " "
D_p = .05-.5% " " "
E_p = < .05% " " "

Issue Date
Rev. ___ Date January 1973
Preliminary (X)
Final Issue ( )
Prepared by J. Rosenbaum, ATO

FAILURE EFFECT ANALYSIS
GULTON INDUSTRIES INC.
DATA SYSTEMS DIVISION

Contract GI No.
TOVS Basic Sounder Unit
Circuit ( )
Subsystem (X)
System ( )
Drawing No.
Code No.

ITEM	REF DESIG.	FUNCTION	FAILURE MODE	DETECT-ABILITY	FAILURE EFFECT	ALTERNATE MODE OF OPERATION	CORRECTIVE ACTION	X_e	X_p	REMARKS
Harmonic Drive	N/A	Drives the scan mirror to achieve 1.125° steps.	Fails to operate due to defective flexible spline, circular spline, or wave generator.	Y	Scan mirror cannot be driven through its 1.125° steps.	N	R.	A_e	C_p	Harmonic drive will be run-in for a minimum of 168 hours at 70° ±2°C prior to acceptance tests; and the harmonic drive will be subjected to rigorous screening and qualification tests.
Pin-Contact Shaft Angle Encoder	N/A	Resolves the exact position of the scanner in the optical field.	1) Failure of one pin-contact.	N	Negligible.	N/A	N/A	E_e	C_p	The loss of only one pin-contact would have no effect on the function of the encoder due to the redundancy of pin-contacts.
			2) Failure of two pin-contacts on the same track.	P	Loss of scan position information.	D	R	A_e	D_p	The encoder will be subjected to stringent acceptance tests to assure low probability of failure.
Scan Mirror	N/A	Views earth, views space, and views a housing blackbody reference for calibration.	1) Scan mirror becomes warped or distorted.	P	Fields of view do not fully coincide.	D	R	D_e	E_p	Scan mirror will be stress relieved by heat treatment after machining, to prevent subsequent warping.
			2) Scan mirror reflective coating becomes degraded.	P	Degradation of sensitivity of the scanner assembly.	D	R	D_e	D_p	Gold will be used for the reflective coating since it is not subject to degradation by ultraviolet radiation.

1356773

NOTES:
FAILURE MODE: O=Open, S=Short, D=Drift, CS=Set F/F, CR=Reset F/F
C1=Constant "1" Level, CO=Constant "0" Level, G=Gate Failure
+ = Either Mode, NO=No Output, EO=Erroneous Output
DETECTABILITY: Y=Yes, P=Possibly, N=No
ALTERNATE MODE(S) OF OPERATION: N=None, D=Operate with Degradation
CORRECTIVE ACTION: R=Replace Unit

NOTES:
CRITICALITY/PROBABILITY FAILURE MODE ASSIGNMENTS (X_e & X_p)
A_e = 75% degraded to catastrophic
B_e = 50% to 75% degraded
C_e = 25% to 50% degraded
D_e = negligible to 25% degraded
E_e = no effect
A_p = 20% + of possible failures
B_p = 5-20% " " "
C_p = .5-5% " " "
D_p = .05-.5% " " "
E_p = < .05% " " "

Issue Date _____
Rev. ___ Date _____
Preliminary (X)
Final Issue ( )
Prepared by JFH

FAILURE EFFECT ANALYSIS
GULTON INDUSTRIES INC.
DATA SYSTEMS DIVISION

Contract GI No. _____
Scan Motor Drive
Circuit (X)
Subsystem ( )
System ( )
Drawing No. _____
Code No. _____

ITEM	REF DESIG.	FUNCTION	FAILURE MODE	DETECT-ABILITY	FAILURE EFFECT	ALTERNATE MODE OF OPERATION	CORRECTIVE ACTION	X_e	X_p	REMARKS
SWITCH, TYPE S1 (AS USED IN QUAD CONFIGURATION)		PROVIDES +28 VOLTS, VIA TURNON, TO SCAN MOTOR	CR1, Q3, Q2, Q1 - S	N	INDIVIDUAL S1 SWITCH PRESENTS A SHORT FROM POWER INPUT TO OUTPUT	REDUNDANT S1 SERIES SWITCH OVERRIDES TO ALLOW +28 V TURNOFF	R	D	A	
			Q1, Q2, Q3, R2 - 0 R3, R2, R4-S R1-0	P	INDIVIDUAL S1 SWITCH PRESENTS AN OPEN FROM POWER INPUT TO OUTPUT	REDUNDANT S1 PARALLEL SWITCH PAIR OVERRIDES TO ALLOW +28V TURNON	R	D	B	IT IS ASSUMED THAT R2-S WILL CAUSE Q1 AND/OR Q2 TO FAIL OPEN AND R4-S WILL CAUSE Q2 TO FAIL OPEN.
			CR1-0	N	LOSS OF ARC SUPPRESSION FOR INDIVIDUAL S1 SWITCH	REDUNDANT S1 PARALLEL SWITCH PAIR OFFERS ARC SUPPRESSION	R	D	D	
			R3-0 R4-0	N	SLIGHT DEGRADATION OF SWITCHING PERFORMANCE FOR INDIVIDUAL S1 SWITCH	REDUNDANT S1 PARALLEL SWITCH PAIR OVERRIDES	R	D	D	
			R1-S	P	EXCESS INPUT CURRENT FROM 54L04. MAY "HOG" CURRENT FROM OTHER S1 SWITCHES	REDUNDANCY MAY NOT FUNCTION	R	A	E	SUGGEST REDUNDANT SERIES R1'S OR A EMITTER RESISTOR FOR Q1 TO GUARD AGAINST THIS FAILURE MODE

13547F1

NOTES:
FAILURE MODE: O=Open, S=Short, D=Drift, CS=Set F/F, CR=Reset F/F
C1=Constant "1" Level, CO=Constant "O" Level, G=Gate Failure
+ = Either Mode, NO=No Output, EO=Erroneous Output
DETECTABILITY: Y=Yes, P=Possibly, N=No
ALTERNATE MODE(S) OF OPERATION: N=None, D=Operate with Degradation
CORRECTIVE ACTION: R=Replace Unit

NOTES:
CRITICALITY/PROBABILITY FAILURE MODE ASSIGNMENTS (X_e & X_p)
A_e = 75% degraded to catastrophic
B_e = 50% to 75% degraded
C_e = 25% to 50% degraded
D_e = negligible to 25% degraded
E_e = no effect
A_p = 20% + of possible failures
B_p = 5-20% " " "
C_p = .5-5% " " "
D_p = .05-.5% " " "
E_p = < .05% " " "

Issue Date _____
Rev. ___ Date _____
Preliminary (X)
Final Issue ( )
Prepared by JFH

FAILURE EFFECT ANALYSIS
GULTON INDUSTRIES INC.
DATA SYSTEMS DIVISION

Contract GI No. _____
Scan Motor Drive
Circuit (X)
Subsystem ( )
System ( )
Drawing No. _____
Code No. _____

ITEM	REF DESIG.	FUNCTION	FAILURE MODE	DETECT-ABILITY	FAILURE EFFECT	ALTERNATE MODE OF OPERATION	CORRECTIVE ACTION	X_e	X_p	REMARKS
SWITCH, TYPE S2 (AS USED IN QUAD CONFIGURATION)		PROVIDES SIGNAL GROUND, VIA TURN ON, TO SCAN MOTOR	CR2, Q4, Q5 -S	N	INDIVIDUAL S2 SWITCH PRESENTS A SHORT FROM INPUT TO SIGNAL GROUND	REDUNDANT S2 SERIES SWITCH OVERRIDES TO ALLOW GROUND TURNOFF	R	D	A	
			Q5, Q4, R5 -O	P	INDIVIDUAL S2 SWITCH PRESENTS AN OPEN FROM INPUT TO SIGNAL GROUND	REDUNDANT S2 PARALLEL SWITCH PAIR OVERRIDES TO ALLOW GROUND TURNON	R	D	B	IT IS ASSUMED THAT R7-S WILL CAUSE Q4 TO FAIL OPEN
			R5-S R6-O R7-O	N	SLIGHT DEGRADATION OF SWITCHING PERFORMANCE FOR INDIVIDUAL S2 SWITCH	REDUNDANT S2 PARALLEL SWITCH PAIR OVERRIDES	R	D	D	
			CR2-O	N	LOSS OF ARC SUPPRESSION FOR INDIVIDUAL S2 SWITCH	REDUNDANT S2 PARALLEL SWITCH PAIR OFFERS ARC SUPPRESSION	R	D	D	

13547F1

APPENDIX B

TOVS-BSU COMPONENT SPECIFICATIONS

J. C. Hammond

TOVS-BSU COMPONENT SPECIFICATIONS

Motor

Permanent magnet, 4-phase,	90-degree stepper, 28 Vdc
Stall torque	10 oz-in. (minimum)
Detent torque	0.4 to 0.5 oz-in.
Rotor inertia	5×10^{-6} in.-lb-s^2
Bearings - Front	duplex pair R-4, 2.5 lb preload
- Rear	single radial R-4
Dynamic torque at 100 pps	3.5 oz-in.

(All motor performance characteristics are based on driving two phases in series.)

Power	9 W average at 36% duty cycle/scan
Peak Power	20 W (driving inertia load of 30×10^{-6} in-lb-s^2 at 10 pps and 0.5 oz-in. static friction torque)
Weight	12 oz
Operating Temperature	all performance characteristics -20° to +70°C after 100 hours exposure
Vacuum	10^{-6} torr
Vibration	Sinusoidal 5 to 2000 Hz at 10g 0-to-peak, all axis Random (nonoperating) 20g rms at 0.2g^2/Hz, 20-2000 Hz
Acceleration	22g (nonoperating)

Reduction Drive

Harmonic Drive	80:1 USM Corp., size 1C
Circular Spline	AISI 440C stainless steel
Flex Spline	AISI 347 stainless steel
Wave Generator	Double eccentric with shielded R3 bearings
Wave Generator Inertia	5×10^{-7} in.-lb-s^2 (max)
Preferential Positioning Torque	0.25 oz-in. (max)
Backlash	2-arc-min
Windup at 10 oz-in	5-arc-min
Weight	6 oz
Operating Temperature	-20° to +70°C

Encoder

Pin type, Litton Industries, 7-bit with redundant pin cage
1 = 40.5 degrees from nadir
71 positions from 1 to +40.5 degrees from nadir
Space look at +70 degrees from nadir
Housing look at +180 degrees from nadir
Accuracy of 72 IFOV ±0.05 degree

TOVS-BSU COMPONENT SPECIFICATIONS

Output Shaft and Bearings

Shaft	0.625 diameter 440 C steel
Bearings - Front	tandem duplex pair R-10, 25-lb preload
Rear	single radial R-10

Bearing Torque Tests with Lubrication at 20°C and +70°C

	Breakaway (max)	Running at 50* r/min (avg)
Motor (duplex pair)	0.1 oz-in.	0.06
rear radial	0.04 oz-in.	0.02
Wave Generator	0.04 oz-in.	0.02
Encoder	0.5 oz-in.	0.2 oz-in.
Output Shaft Bearings (duplex pair)	1.5 oz-in.	0.9 oz-in.
rear radial	0.3 oz-in.	0.15 oz-in.

* Peak torque limited to twice average running torque.