CC
879.25
G822

FINAL REPORT

TIROS OPERATIONAL VERTICAL SOUNDER

SUBTASK; Analog Channel Study

GULTON INDUSTRIES INC.

DATA SYSTEMS DIVISION • 15000 CENTRAL EAST, ALBUQUERQUE, N. M. 87112

73040507

QC
879.25
G822

FINAL REPORT

TIROS OPERATIONAL VERTICAL SOUNDER,
SUBTASK; Analog Channel Study ;

Purchase Order No. 2-35402

February 28, 1973

Prepared for:

U.S. Department of Commerce
National Oceanic and Atmospheric Administration
National Environmental Satellite Service
P. O. Box 9227
Suitland, Maryland 20233

ATMOSPHERIC SCIENCES
LIBRARY
MAY 1975
N.O.A.A.
U. S. Dept. of Commerce

Prepared by:

R. W. Goranson

Approved by:

R. H. Maschhoff, Project Manager
Gulton Industries, Inc.
Data Systems Division

15 ..06

National Oceanic and Atmospheric Administration
TIROS Satellites and Satellite Meteorology

ERRATA NOTICE

One or more conditions of the original document may affect the quality of the image, such as:

Discolored pages
Faded or light ink
Binding intrudes into the text

This has been a co-operative project between the NOAA Central Library and the Climate Database Modernization Program, National Climate Data Center (NCDC). To view the original document contact the NOAA Central Library in Silver Spring, MD at (301) 713-2607 x124 or Library.Reference@noaa.gov.

HOV Services
Imaging Contractor
12200 Kiln Court
Beltsville, MD 20704-1387
January 26, 2009

FOREWORD

This report is the result of an analog channel design study for the TIROS-N Operational Vertical Sounder. The study was conducted by Gulton Industries, Data Systems Division, under contract to the National Oceanic and Atmospheric Agency, National Environmental Satellite Service. This study is one part of the effort directed at total design of the instrument.

The study relied heavily upon experience gained on the ITPR and ERB programs. The areas of most intensive work on the analog channel study were the investigation into advances in FET availability that would be suitable TOVS preamplifiers, and in a computer model of the analog channel to verify the design and to help define critical amplifier parameters.

CONTENTS

FOREWORD

1. Introduction
2. Analog Channel Definition
3. Detector/Preamplifier
4. Post Amplifier
5. Synchronous Demodulator
6. Integration
7. System Worst Case Analysis

FIGURES

1.1 Alternate Hot and Cold Scenes
2.1 Detector/Analog Channel Signal Processing Diagram
3.1 FET Test Results
3.2 Detector and Preamp Schematic
3.3 Noise Equivalent Circuits
4.1A Post Amplifier Schematic
4.1B Bode Plots of Post Amplifier
4.2 Analog Waveforms
4.3 Computer Run: 1 Sec. T.C. Detector; 0, 80, INF.-Amplifier
4.4 Computer Run: 0.1 Sec. T.C. Detector; 0, 80, INF.-Amplifier
4.5 Computer Run: 1 Sec. T.C. Detector; 40, 80, INF.-Amplifier
4.6 Computer Run: 1 Sec. T.C. Detector; 40, 40, INF.-Amplifier
4.7 Computer Run: 1 Sec. T.C. Detector; 20, 40, INF.-Amplifier
4.8 Computer Run: Detail of 4.4 and 4.7
4.9 Computer Run:
4.10 Computer Run: 0.1 Sec. T.C. Detector; 20, 40, INF.-Amplifier
4.11 Computer Run: 2 Sec. T.C. Detector; 20, 40, INF.-Amplifier
4.12 Computer Run: 1 Sec. T.C. Detector; 20, 40, 500 -Amplifier
4.13 Radiation Test Block Diagram
5.1 Synchronous Demodulator
5.2 Optimizing Chopper to scene Phase
6.1 Integrator
6.2 Demodulator/Integrator Noise Bandwidth

1.0 Introduction

The analog channel for the TOVS-BSU infrared detectors has some critical aspects of design that are due to using the relatively slow response of pyroelectric detectors for a medium speed scan application. Besides the expected functions of amplification, demodulation of the optical chopping, and radiance level interpretation, the analog channel must provide for noise and scene-to-scene crosstalk suppression.

We envision a hypothetical situation

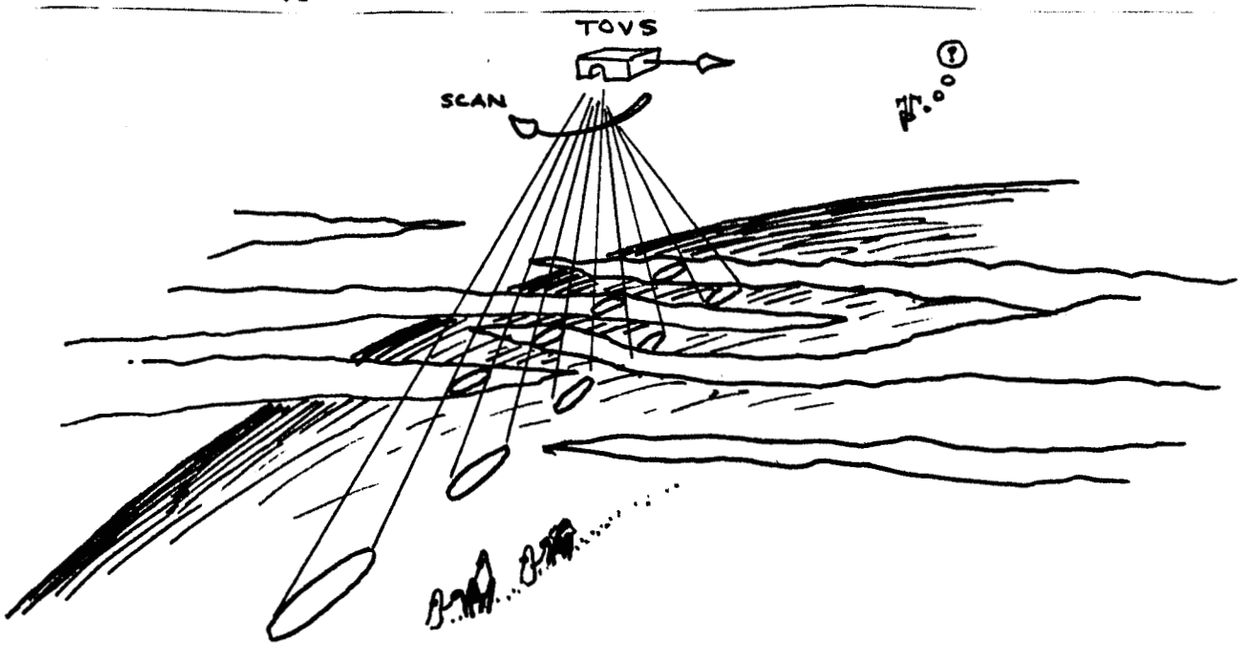

ALTERNATE HOT & COLD SCENES

of a TOVS scan time where the alternate scenes of the Gobi desert are obscured by clouds, in such a manner that the relative radiance of the desert is as much more than the blackbody reference as the cloud radiance is less. The readings from the hot scenes must not be influenced by the cold scenes and vice versa if crosstalk is to be avoided. The time of two scenes is one-fifth second, resulting in a 5 Hz square wave, the maximum fundamental frequency. This contrived situation will be quite usual, except for amplitude, where partial cloud cover occurs.

Because of the detector's integrating characteristic for both scene-induced and chopper-induced changes, a rather complex detector output waveform results for the above situation. Unless the varying scene-induced components can either be suppressed or properly shaped, the demodulator output will be contaminated. The demodulator is intended to operate only on the chopper-induced components. Because of the complexity of the problem, where piecemeal

analysis (i.e., a functional block at a time) will not reveal the answer, the complete system has been computer-modeled so as optimum method of signal handling could be derived -- the objective being to maximize S/N and minimize potential crosstalk.

2.0 Analog Channel Definition

The analog channel is influenced externally by the scan mirror system, in that the mirror scan rate and settle time determine the input radiance frequency and harmonic content. At a step-to-step period of 100 milliseconds, the scene radiance fundamental frequency can be as high as 5 Hz. Adding mirror response results in a quasi-sinusoidal change from one scene radiance to another with a peak-to-peak (180°) period of the mirror transition time.

The optical chopper modulates the 5 Hz scene radiance signal at a 40 Hz rate. The chopper waveform is also a sinusoidally-modified square wave, the signal varying as the blade crosses the beam. For the large telescopes this period is 938 microseconds, for the small telescopes 578 microseconds. In either case the period is over an order of magnitude smaller than the chopper half-cycle period and, therefore, does not appreciably effect the harmonic amplitude within the frequency passband of interest. An area of importance electrically is the relative phasing between the chopper and the scene frequency, and that the chopper and scene frequencies are as symmetrical as possible. Both of these effect the signal amplitude and thereby improve the system signal-to-noise. A worst case look at this situation would be if alternate scene radiances were full scale "hot" and full scale "cold" with the chopper blackbody in between. The optimum phase versus integration time can be most clearly seen in the case of a 37 millisecond mirror settle time. A symmetrical waveform and minimal scene-to-scene crosstalk can be achieved, over a 50 millisecond integration time, with a scene-to-chopper phase shift of 90 degrees.

However, by going to a 270 degree phase shift, the integration time may be increased to 75 milliseconds with a proportional increase in signal-to-noise. The integration time should be multiples of 25 millisecond chopper periods, for optimum drift-free accuracy. This is illustrated in Figure 5.2 in the Demodulator Section.

The next system component that effects the ac signal is the detector. The detector's ac response to the chopped scene radiance is a function of its electrical and thermal time constants. As it happens, we have two distinct types of detectors with two distinct responses and resulting complexities. The thinner, heatsunk detectors as built by Mullard, Ltd. have thermal time constants that are an order of magnitude (about .1 second compared to about 1 second) lower than the thicker, thermally isolated detectors as built by Barnes Engineering. In the ITPR, long time constant Barnes detectors were used, which were found potentially to cause crosstalk problems. It was not evident that the problem solution found for the ITPR was applicable to TOVS, so a total system model was required to demonstrate the problem and alternate solutions.

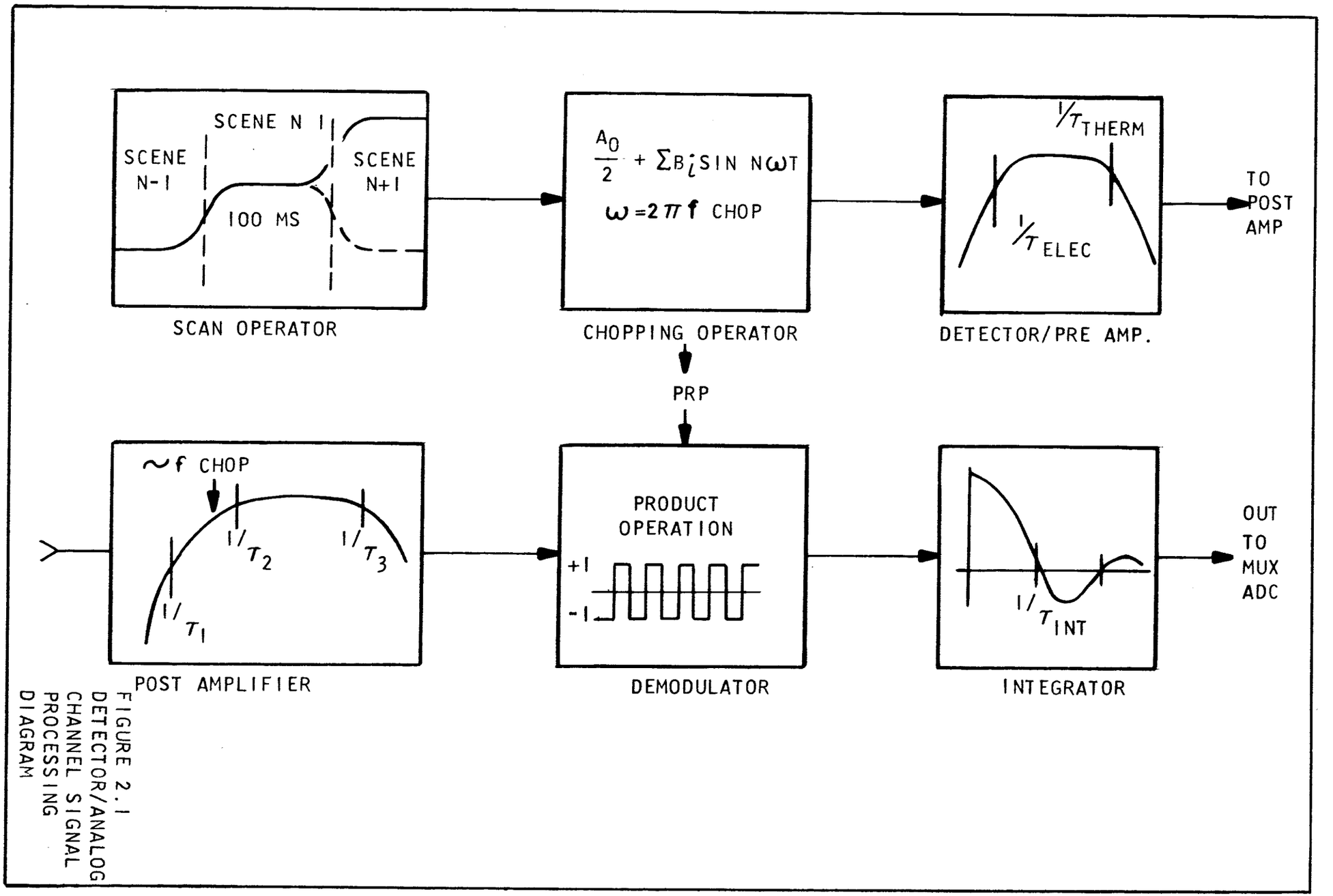

FIGURE 2.1
DETECTOR/ANALOG
CHANNEL SIGNAL
PROCESSING
DIAGRAM

13961-856

The preamplifier, post-amplifier, demodulator and integrator follow the detector, and comprise the rest of the definition of the analog channel. The following sections cover these components and their specific effects on the signal.

3.0 Detector/Preamplifier

The analog channel study included a phase of field effect transistor (FET) testing. This was to determine the quality and availability of low-noise FET's suitable for the detector preamps. Figure 3.1 is a tabulation of the junction FET's tested, and the results. In general, the noise is a function of geometry, and small geometry devices exhibit lower current noise and large geometry devices exhibit lower voltage noise. As may be seen in the tabulation, this is not rigorous; and, also, wide variations may occur in a particular geometry, or device number, making necessary the selections of a FET on the basis of the desired performance.

In past pyroelectric detector radiometric instruments, the system has been amplifier noise-limited (assuming optimum design otherwise) due to the lack of availability of front-end FET's of suitably low noise. Our recent survey of the market clearly indicates an improvement in FET's over the past 2 years, such that several device types are now available that may be used for selecting suitably low-noise preamps.

The circuit found most suitable for pyroelectric-type detectors is shown in Figure 3.2. The circuit uses ac voltage feedback and dc current feedback. This combination has several desirable features, including having one electrode of the detector at signal ground and the other only a few millivolts above signal ground, yielding good microphonic rejection and fast overload recovery.

Microphonic noise of at least two types can occur. One, due to relative motion of the detector signal lead with respect to the case, can be avoided or greatly reduced by arranging that this lead is near dc ground potential. Using current mode amplification is one way of accomplishing this. The other source of microphonics arises in the crystal itself. All pyroelectric materials are piezoelectric which demands the maximum isolation possible for the detector element. Suppliers of detectors have developed mounting techniques which control microphonics quite well. Any design which demands a new mounting technique would require provisions for the resulting new microphonic characteristics.

The voltage noise is defined as that obtained with a short-circuited input. it is written directly as $\bar{e}_n$. Generally $\bar{e}_n$ as a function of frequency is flat above 50 Hz; below this it usually exhibits a serious 1/f characteristics and is one of the principle reasons for an optically chopped system. Current noise is found by inserting an impedance Z_s in series with the input, noting the increased noise, and performing a quadratic subtraction $i_n = \frac{e_{\text{difference}}}{Z_s}$.

FET Designation	Source	$nV/\sqrt{Hz}$ Total Noise in Preamp with a 30 pf Cap. Simulating Detector			Removing Noise of a 2 x 10" Load Resistor		Derived Current Noise
		20Hz	40Hz	80Hz	40Hz	80Hz	$x\ 10^{-16}\ A/\sqrt{Hz}$
2N5199-1	Intersil	94	52	32	46	29	4.67
2N5199-2	Intersil	174	65	43	60	41	5.74
2N5199-3	Intersil	280	104	44	101	42	12.0
2N5199-4	Intersil	103	52	25	45.6	21.6	5.26
2N5199-5	Intersil	122	55	29	49	26	5.44
2N5454-1	Solitron	165	68	39	63	37	6.68
DN1154-2	Siliconix	90	42.5	28	34	25	3.02
DN1154-3	Siliconix	94	42	24	38	20	4.23
DN1154-4	Siliconix	103	52	36.5	46	34	4.06
2N5521-1	Siliconix	112	52	26	46	22.8	5.24
2N5521-3	Siliconix	85	50	28	43	25	4.58
AD841-1	Analog Dev.	106	62	36.5	57	34	5.99
FD1726	Solitron	62.6	51.7	33.3	*	*	5.16

* $1 \times 10^{12}\ \Omega$ resistor contributes insignificant noise

Figure 3.1: FET Test Results

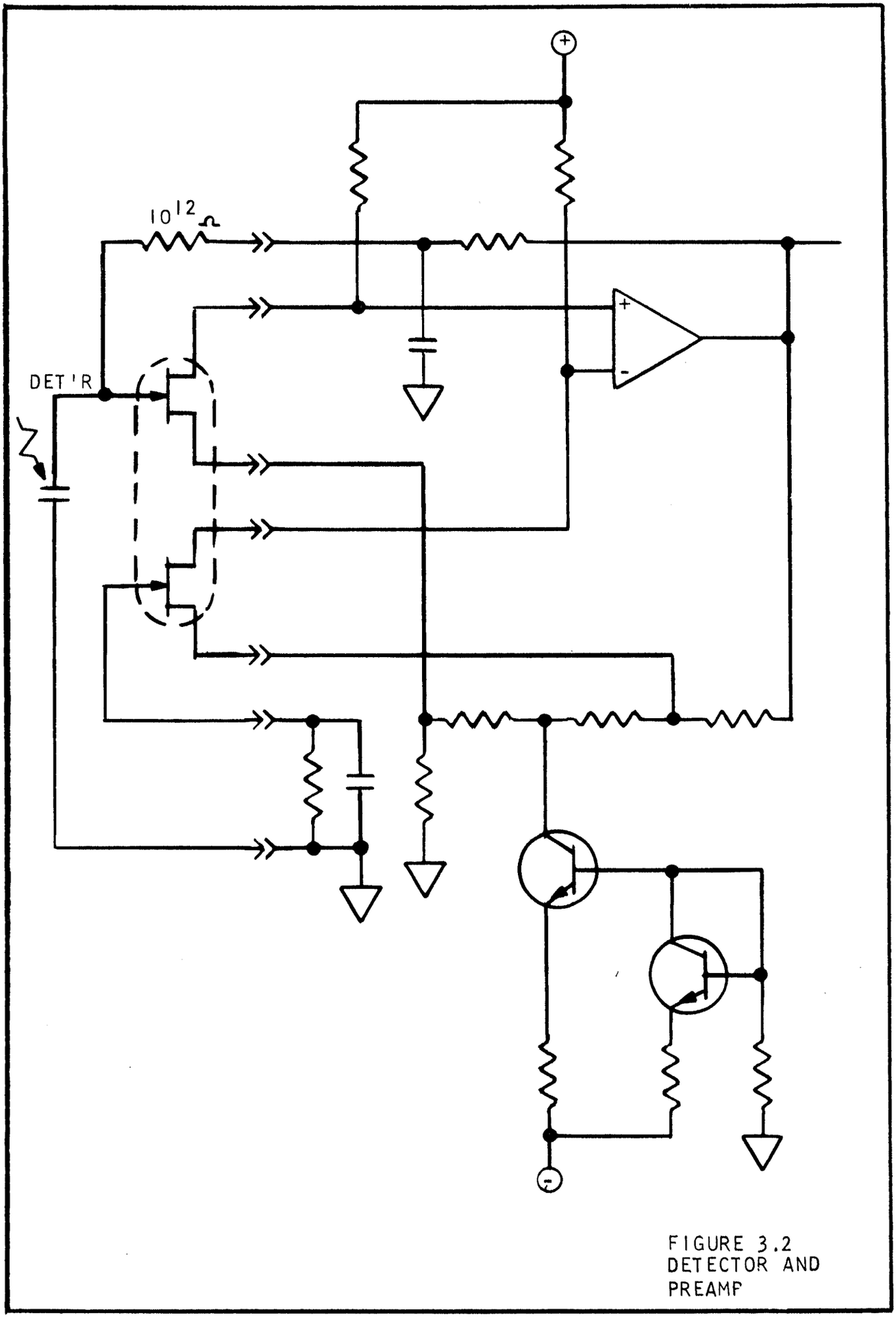

FIGURE 3.2
DETECTOR AND
PREAMP

13961-851

Having found the current noise, its effect with a detector in place yields a voltage noise

$$e_n = \frac{i_n}{\omega C}$$

The current noise, i_n, as tabulated in Figure 3.1, was derived from the experimental voltage noise, e_f, by use of the relationship

$$\sqrt{\left(\frac{i_n}{\omega_1 C}\right)^2 + e_v^2} = e_f^2 .$$

Assuming e_v and i_n independent of frequency, the above equation at two frequencies yields

$$\sqrt{\left(\frac{i_n}{\omega_1 C}\right)^2 - \left(\frac{i_n}{\omega_2 C}\right)^2} = e_1^2 - e_2^2 .$$

Solving for the current noise

$$i_n = \omega_1 \omega_2 C \sqrt{\frac{e_1^2 - e_2^2}{\omega_2^2 - \omega_1^2}} \; .*$$

In our tabulation the noise voltage at 40 and 80 Hz was used, with the 45 pf capacitance, reducing the calculation to

$$i_n = (2\pi 40)(45 \times 10^{-12}) \sqrt{\frac{4}{3}(e_1^2 - e_2^2)} .$$

*Note: This equation appears incorrectly on Table 6.2 of the TOVS Final Report as

$$i_n = \frac{1}{C} \sqrt{\frac{e_1^2 - e_2^2}{\omega_1^2 - \omega_2^2}}$$

but the calculations are correct as shown.

A thin detector has an advantage as seen where a typical current noise of 5×10^{-16} A/$\sqrt{Hz}$ is applied.

$\breve{e}_n$ = 79.5 nv/$\sqrt{Hz}$ 40 μm thick x 1.8 mm dia at 40 Hz

= 20 nv/$\sqrt{Hz}$ 10 μm thick x 1.8 mm dia at 40 Hz

Corresponding NEP's are 1.9×10^{-10} and 4.75×10^{-11} W/$\sqrt{Hz}$.

FET's that exhibit voltage noises of 20 to 25 nv/$\sqrt{Hz}$ are readily available, especially if we use a thin detector, so that current noise is not so critical. It can be observed that the input capacitance of the amplifier was not allowed for in determining R_V. It turns out that first order NEP's are not effected because the noise, as well as R_V, goes down with extra circuit capacitance.

A bias resistor is needed for operating point stability or for a path for FET leakage currents. Resistors are available of 0.5×10^{12} ohm or greater that offer no noise problem.

In order to realize the optimum noise performance possible with the new FET's, noise on the power supply line must be well decoupled.

Among the detectors that have been selected as suitable , an alanine doped TGS crystal, is permanently poled. This permanently-poled detector would eliminate the requirement for repoling circuitry and command. The scheme of poling in orbit used on ITPR should be applied if pure TGS is used.

A noise equivalent circuit is a convenient tool which can be used to gain full benefit from the test results presented later. Figure 3.3 depicts the two forms of a noise equivalent circuit of the detector plus the preamplifier.

The behavior with frequency for a given noise is evident from the figure; several merit discussion. Noise due to leakage conductance and the load resistor drop-off at 6 db per octave because the capacitor impedance behaves in this manner with frequency. The loss tangent itself is assumed constant with frequency over the 10 to 100 Hz range. Noise due to it drops at 3 db per octave. Amplifier voltage noise exhibits 1/f behavior below a frequency which varies from device to device but usually below 50 Hz for quality FET's. The amplifier current noise itself is assumed flat with frequency over our range of interest. Again, noise due to it drops at 6 db per octave in the presence of the detector capacitance.

At the outset of the testing program a decision was made to do the critical testing of detectors and amplifiers when mated. FET's of known quality were incorporated into a package also containing the detector element and the large bias resistor. The impetus for this came from difficulties encountered in trying to evaluate bare element detectors under the ITPR program. The difficulties of controlling microphonics and extraneous pickup when the high impedance

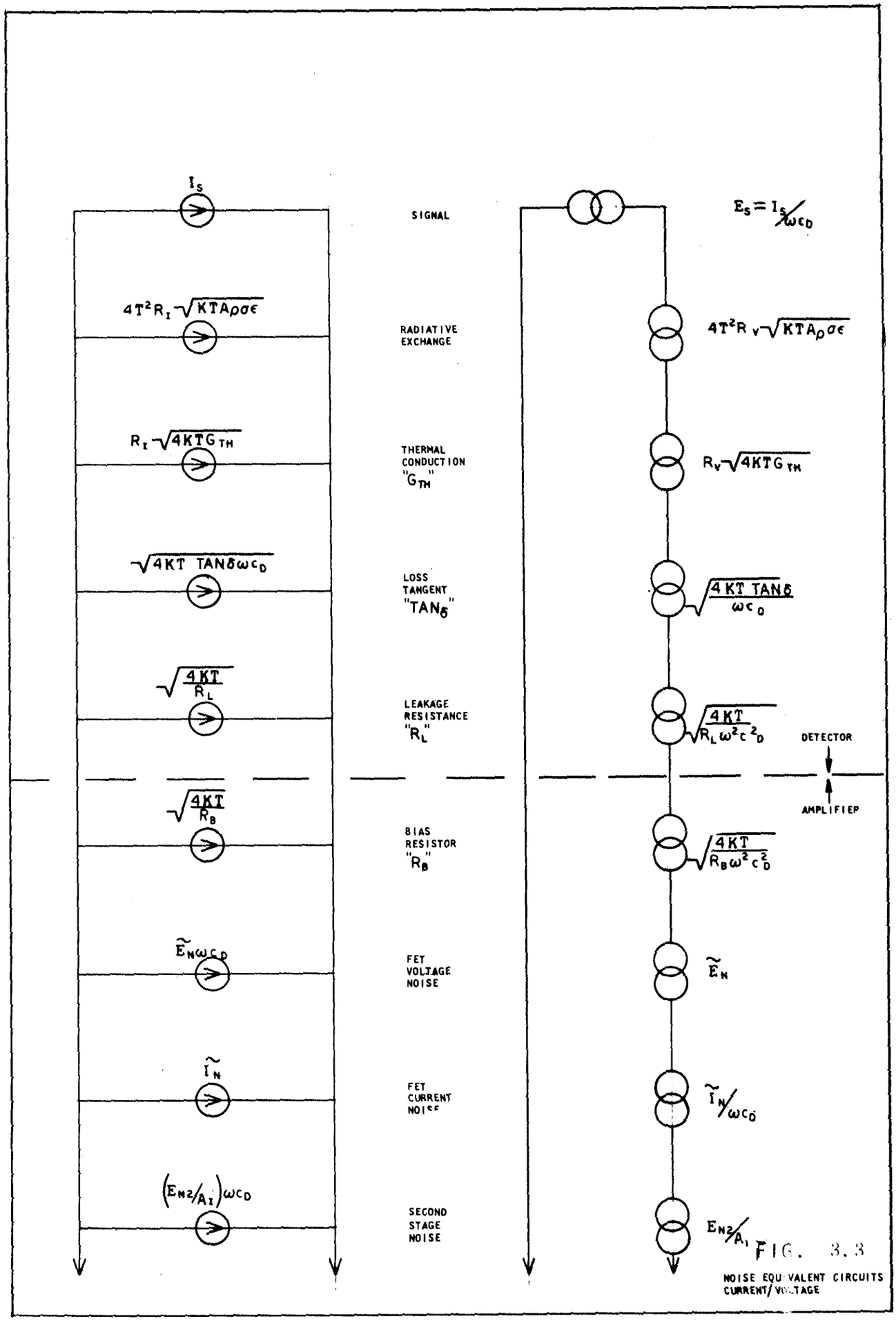

FIG. 3.3

NOISE EQUIVALENT CIRCUITS CURRENT/VOLTAGE

13901-841

leads needed to be routed through connectors are serious. In addition, this facilitated more realistic radiation because of the close similarity to final packaging techniques. The responsivity and noise were measured with the same amplifier. The resultant measured NEP's have virtually no uncertainty about them arising from amplifier gain uncertainties.

Early in the testing program measurements were made of the input characteristics of the type of preamplifier circuit employed on the ITPR. Because of the high loop gain of the circuit (provided by the operational amplifier), there should be virtually no Miller multiplication of the drain gate capacitance of the input FET. Using a 2N5197 for the input FET, a simple test consisting of injecting a small signal from a low impedance source on the ground side of a 17 pf capacitor simulating the detector. The amplifier output was noted and then also noted when the capacitor was shorted. The ratio of the output voltages resulted from an amplifier input capacitance of 15 pf. Several frequencies between 10 Hz and 200 Hz were used to verify that the impedance was indeed capacitive in nature.

4.0 Post-Amplifier

The post-amplifier has two principle functions. The amplifier must not only provide the gain necessary to provide full-scale voltage at a radiance equivalent to 330°K and zero voltage at 4°K, but must provide the required frequency compensation for the detector's thermal time constant, and a passband designed to maximize information content and minimize extraneous noise content and scene-to-scene crosstalk.

The easiest way to visualize the signal-to-noise situation is to examine the information content of a scene, with alternating scenes of differing radiance, in the form of a Forier analysis. This results in the usual series expression for a 5 Hz square wave, except that the higher frequency terms are reduced in amplitude due to the nondiscontinuous transition from scene-to-scene. This series represents the information desired, and the series sum at any point of peak amplitude represents the scene radiance.

The chopping operator images the 5 Hz scene series on every odd harmonic of the chopping frequency. The original series is preserved also, due to the half-wave nature of the chopper, and the resultant dc component.

The detector acts on the signal according to the equation:

$$Y_{out} = W_{in} \left(\frac{1}{1 + \frac{1}{\tau_e \omega j}} \right) \left(\frac{1}{1 + \tau_{th} \omega j} \right) R$$

The electrical time constant, $_e$, is about 10 seconds so that portion of the equation is essentially one, for all frequencies above 5 Hz. The thermal time

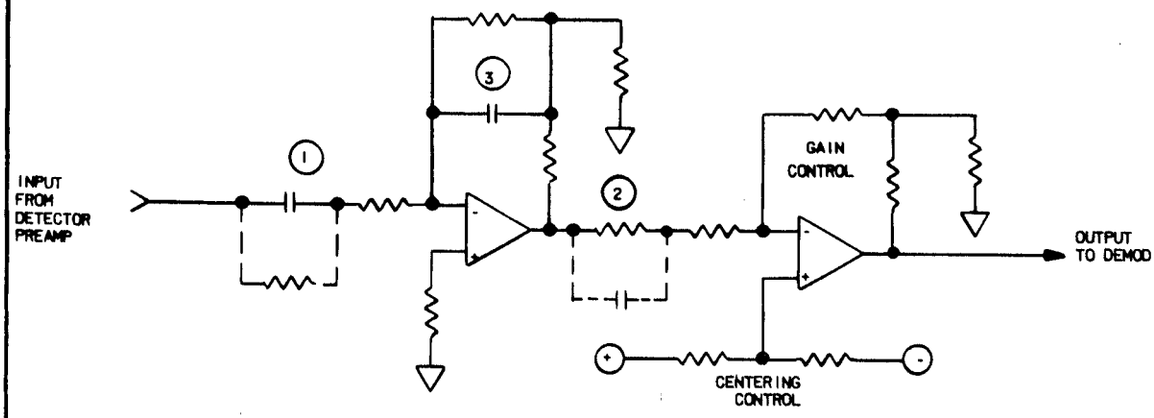

FIGURE 4.1A
POST AMPLIFIER SCHEMATIC
(2 OR 3 POLE OPTION)

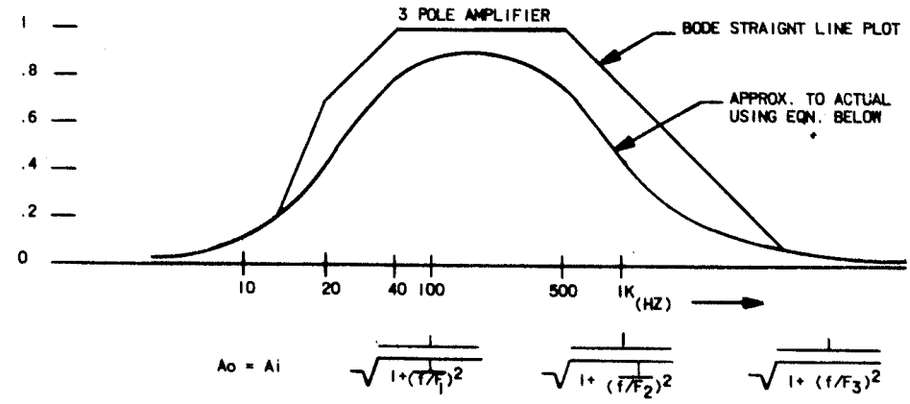

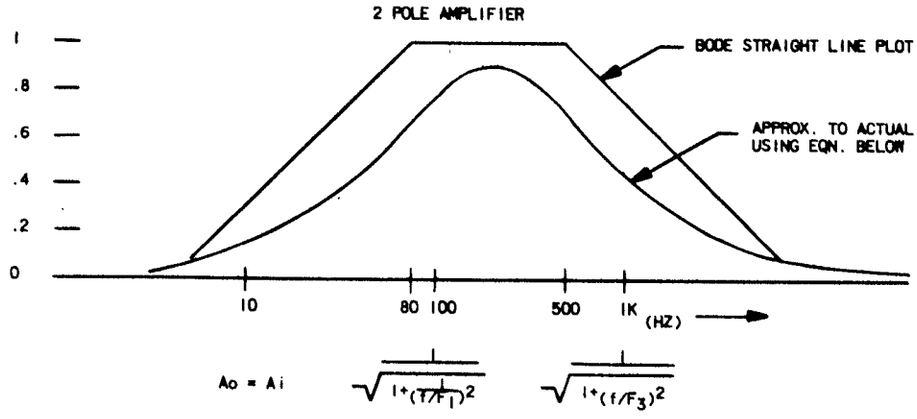

FIGURE 4.1B
BODE PLOTS OF POST AMPLIFIER

constant is a function of detector size and thickness, and even more important, the mounting. For a given active area, a thicker, thermally-insulated detector such as the Barnes unit exhibits a thermal time constant like one or two seconds, and a thinner, heat-sunk detector such as the Mullard unit exhibits a thermal time constant around one-tenth of a second. This results in a factor of ten difference in response as a function of frequency for the two units from 5 Hz to 40 Hz. The phase lag is given by:

$$\phi_{out} = \phi_{in} + \arctan \tau_{th} \omega - \left(90 - \arctan \tau_e \omega\right)$$

Again the electrical time constant is large enough that there is no phase shift contribution of significance, above 5 Hz. The thermal time constant of one second causes a 90° lag (within a couple of degrees) uniformly from 5 Hz up, i.e., is almost a "perfect" integrator. The tenth second thermal time constant unit is not quite so consistent.

The post-amplifier must transform this detector output to a signal acceptable to the full-wave demodulator. One technique is to simply differentiate the detector signal, reconstructing the original chopped scene signal, except for the loss of any dc component which the full-wave demodulator will restore. This technique is illustrated with the waveforms in Figure 4.2. A computer tabulation of this configuration, and the computer plot, are shown in Figure 4.3 for a 1-second thermal time constant detector and Figure 4.4 for a 100-millisecond thermal time constant detector. The blackbody input scenes were full-scale hot and reference, respectively, combining both situations shown in Figure 4.2. The mirror transition time was 37.5 milliseconds, the chopper was 40 Hz, phased at 270° relative to the scene, and the integration time was 75 milliseconds. The amplifier in both cases had a single high-pass pole at 80 Hz. Clearly the thin detector functions well with this amplifier, but the thicker detector never quite reaches the desired zero scene value. A second stage of differentiation will achieve the required result for the thick detector, and Figures 4.5 through 4.7 illustrate a gradation from poles at 40 and 80 Hz, 40 and 40 Hz, and 20 and 40 Hz, respectively. The final design achieves the desired result, and Figures 4.8 show the details of the zero reading for both the thin and thick detectors. Figure 4.9 is similar to 4.7 except using a 50 millisecond integration. As an illustration of stability and detector thermal time constant, Figure 4.10 shows a thin detector on the 20 and 40 Hz amplifier, and Figure 4.11 shows a detector with a 2-second thermal time constant, demonstrating the system independence of thermal time constant, except for gain; i.e., the zero value is reached by all three detectors (.1, 1 and 2-second thermal time constants) at the same time.

In all of the computer plots, the "O's" are two successive chopped input scenes the "x" are the amplifier output, and the "+'s" are the plot of integration output.

Note that the integrator plots given are plots of the integrator output if the integration period had begun 75 milliseconds previous (50 ms for Figure 4.9). Since the zero value is reached at .190 seconds means that each .090 into each .100 second long scene is an optimum "read" time, and the integration should

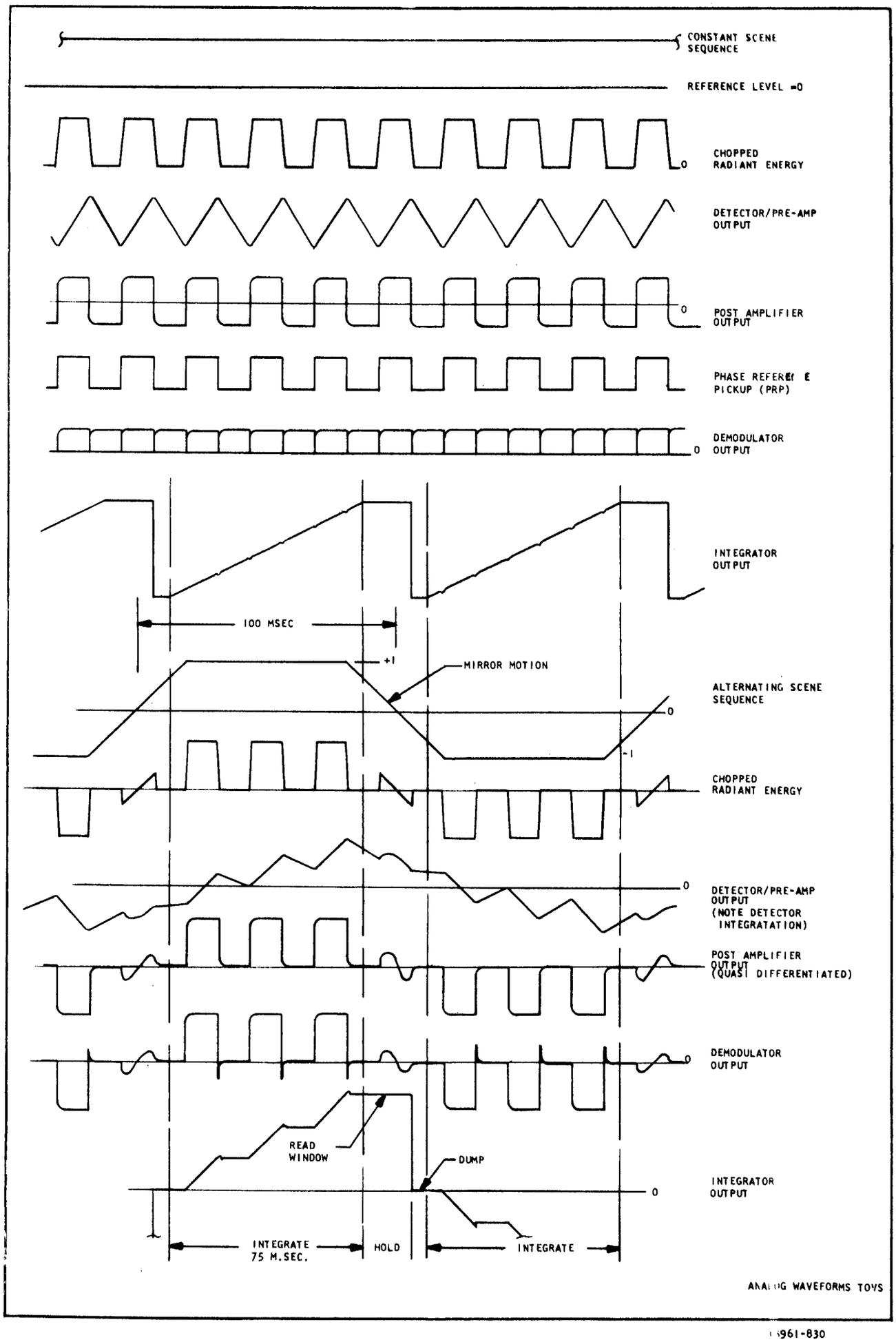
CONSTANT SCENE SEQUENCE
REFERENCE LEVEL =0
CHOPPED RADIANT ENERGY
0
DETECTOR/PRE-AMP OUTPUT
POST AMPLIFIER OUTPUT
0
PHASE REFERENCE PICKUP (PRP)
DEMODULATOR OUTPUT
0
INTEGRATOR OUTPUT
100 MSEC
+1
MIRROR MOTION
ALTERNATING SCENE SEQUENCE
0
-1
CHOPPED RADIANT ENERGY
0
DETECTOR/PRE-AMP OUTPUT (NOTE DETECTOR INTEGRATATION)
POST AMPLIFIER OUTPUT (QUASI DIFFERENTIATED)
DEMODULATOR OUTPUT
0
READ WINDOW
DUMP
INTEGRATOR OUTPUT
0
INTEGRATE 75 M.SEC.
HOLD
INTEGRATE
ANALOG WAVEFORMS TOVS

1961-830

```
     HARMONIC ANALYSIS OF TIROS SOUNDER SYSTEM

 WILD YOU LIKE INTERMEDIATE RESULTS, YES OR NO ? P

WHAT ARE THE RELATIVE RADIANCES OF SCENE 1, 2 & THE B.B. ? 1,0,0

WHAT ARE THE DETECTOR'S ELEC. & THERMAL T. C.'S ? 10,1

WHAT IS THE CHOPPER FREQ. IN 10'S OF HZ. ? 4

WHAT IS THE CHOPPER PHASE RELATIVE TO THE SCENE EDGE,
'0' IS THE START OF OPEN, '180' IS START OF CLOSED CYCLE ? 270

WHAT IS THE MAX. FREQ. OF INTEREST, UP TO 1000 HZ ? 400

ASSUMING THE AMPLIFIER RESPONSE AS BEFORE -

WHAT ARE THE FREQUENCIES AT POINTS 1, 11, & 2 ? 1E-5,10,1E3

WHAT VALUE SHOULD I USE FOR 'A' ? 1E4

THE OPTIMUM DEMOD. PHASE SHIFT IS AROUND 26.31 DEGREES.
WHAT PHASE SHIFT WOULD YOU LIKE TO TRY? 26.31

WHAT IS THE TIME CONST. OF THE LO-PASS FILTER ? 0

HOW MANY INTEGRATION INTERVALS ? 80
WHAT START & STOP TIMES ? 0,.2

WHAT IS THE INTEGRATION TIME IN SECONDS ? .075

THE AMPLIFIER AND INTEGRATOR OUTPUTS, AT 'TIME', ARE -
```

WOULD YOU LIKE A PLOT, YES OR NO ? YES

TIME	INTEGRAL	AMP.OUTPUT
.00000	.01660	3.52590
.00250	.01202	5.61282
.00500	.00863	7.63998
.00750	.01635	3.23215
.01000	.02890	-2.70870
.01250	.04251	-4.24840
.01500	.05551	-4.69899
.01750	.07278	-4.66715
.02000	.09438	3.41582
.02250	.10592	12.01643
.02500	.10212	14.24156
.02750	.09239	14.91654
.03000	.08543	14.90557
.03250	.09418	6.79106
.03500	.11045	-1.82937
.03750	.13189	-4.10064
.04000	.14865	-4.76614
.04250	.16703	-4.80458
.04500	.18917	3.31241
.04750	.20255	11.26233
.05000	.20038	14.13379
.05250	.19045	14.74011
.05500	.18236	14.79305
.05750	.18812	6.62284
.06000	.20716	-1.92844
.06250	.22369	-4.26205
.06500	.23803	-4.87873
.06750	.25086	-4.97199
.07000	.26566	3.19300
.07250	.27507	11.71651
.07500	.27486	14.01659
.07750	.26967	14.60399
.08000	.26564	14.64662
.08250	.26487	6.49125
.08500	.27136	-2.08391
.08750	.27449	-4.34488
.09000	.27574	-5.03757
.09250	.27179	-5.11281
.09500	.26508	.73797
.09750	.26245	5.83941
.10000	.26519	5.65682
.10250	.26977	4.20492
.10500	.27315	2.36120
.10750	.26544	-1.40402
.11000	.25289	-4.19421
.11250	.23927	-4.93433
.11500	.22628	-5.11876
.11750	.20900	-5.33403
.12000	.18741	-5.14395
.12250	.17587	-5.11352
.12500	.17967	-5.05883
.12750	.18940	-5.09880
.13000	.19636	-4.90438
.13250	.18760	-4.96323
.13500	.16834	-5.07354
.13750	.14990	-5.08209
.14000	.13313	-5.05140
.14250	.11475	-5.19661
.14500	.09262	-5.14053
.14750	.07954	-4.95942
.15000	.08141	-4.95107
.15250	.09134	-4.92237
.15500	.09941	-4.79186
.15750	.09367	-4.79473
.16000	.07462	-4.97447
.16250	.05809	-4.92067
.16500	.04376	-4.93901
.16750	.03093	-5.02919
.17000	.01612	-5.02111
.17250	.00671	-4.81359
.17500	.00698	-4.83386
.17750	.01212	-4.78625
.18000	.01614	-4.64544
.18250	.01692	-4.66314
.18500	.01043	-4.81901
.18750	.00729	-4.83785
.19000	.00605	-4.78017
.19250	.00999	-4.88836
.19500	.01671	-2.56606
.19750	.01933	1.06356
.20000	.01660	3.52592

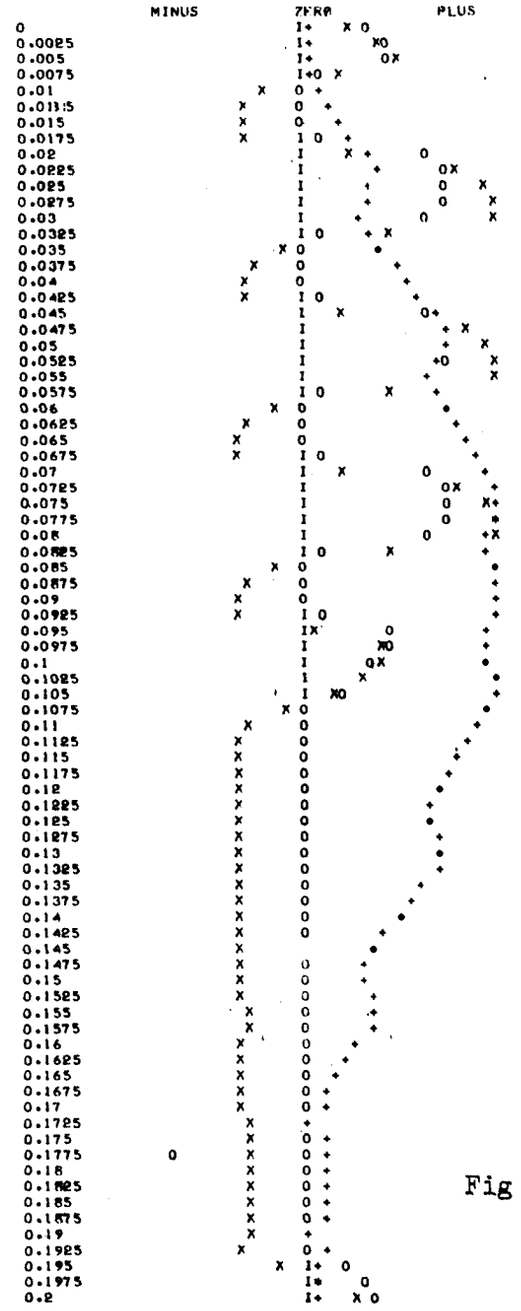

Fig 4.3

```
      HARMONIC ANALYSIS OF TIROS SOUNDER SYSTEM

WOULD YOU LIKE INTERMEDIATE RESULTS, YES OR NO ? P

WHAT ARE THE RELATIVE RADIANCES OF SCENE 1, 2 & THE R.B. ? 1,0,0

WHAT ARE THE DETECTOR'S ELEC. & THERMAL T. C.'S ? 10,.1

WHAT IS THE CHOPPER FREQ. IN 10'S OF HZ. ? 4

WHAT IS THE CHOPPER PHASE RELATIVE TO THE SCENE EDGE,
'0' IS THE START OF OPEN, '180' IS START OF CLOSED CYCLE ? 270

WHAT IS THE MAX. FREQ. OF INTEREST, UP TO 1000 HZ ? 400

ASSUMING THE AMPLIFIER RESPONSE AS BEFORE -

WHAT ARE THE FREQUENCIES AT POINTS 1, 3 & 3 ? 1E-9,80,1E9

WHAT VALUE SHOULD I USE FOR 'A' ? 1E4

THE OPTIMUM DEMOD. PHASE SHIFT IS AROUND 114.86 DEGREES.
WHAT PHASE SHIFT WOULD YOU LIKE TO TRY? 24.26

WHAT IS THE TIME CONST. OF THE LO-PASS FILTER ? 0

HOW MANY INTEGRATION INTERVALS ? 80
WHAT START & STOP TIMES ? 0,.2

WHAT IS THE INTEGRATION TIME IN SECONDS ? .075

THE AMPLIFIER AND INTEGRATOR OUTPUTS, AT 'TIME', ARE -
```

TIME	INTEGRAL	AMP.OUTPUT
.00000	.10795	55.53775
.00250	.06526	71.96235
.00500	.12194	90.33808
.00750	.21486	44.59078
.01000	.27789	-15.06599
.01250	.37299	-29.94274
.01500	.50705	-31.75808
.01750	.72812	-31.67375
.02000	.89075	48.08718
.02250	.96026	131.86697
.02500	.94442	150.83519
.02750	.88550	154.24086
.03000	.89167	150.54560
.03250	.96988	66.81390
.03500	1.09860	-19.74620
.03750	1.28689	-41.71010
.04000	1.46537	-47.24603
.04250	1.65367	-46.68550
.04500	1.81062	14.68836
.04750	1.89987	118.41757
.05000	1.94144	138.19546
.05250	1.89009	141.10989
.05500	1.85371	138.46543
.05750	1.88907	54.47518
.06000	2.02131	-31.09837
.06250	2.23149	-53.39973
.06500	2.40877	-58.86839
.06750	2.50383	-57.82208
.07000	2.58351	114.36538
.07250	2.65411	107.96277
.07500	2.74610	128.67383
.07750	2.72893	131.14777
.08000	2.65144	128.73593
.08250	2.61563	45.[illegible]
.08500	2.67965	-40.45288
.08750	2.78278	-61.80329
.09000	2.81690	-67.28254
.09250	2.70943	-66.38827
.09500	2.63313	-6.93836
.09750	2.62515	43.55134
.10000	2.70780	40.76905
.10250	2.75049	25.52888
.10500	2.69381	6.76824
.10750	2.60089	-30.57935
.11000	2.53786	-57.37268
.11250	2.44276	-63.36408
.11500	2.30870	-63.73980
.11750	2.08763	-64.81464
.12000	1.98500	-62.09871
.12250	1.85549	-59.42831
.12500	1.87133	-57.54839
.12750	1.93015	-56.65018
.13000	1.98408	-55.44781
.13250	1.84587	-53.80140
.13500	1.71715	-52.69546
.13750	1.52886	-51.59670
.14000	1.35038	-50.24465
.14250	1.16208	-50.47285
.14500	1.00513	-48.82981
.14750	.91588	-45.97889
.15000	.87431	-44.88865
.15250	.91566	-41.61920
.15500	.96204	-41.16708
.15750	.91668	-40.46378
.16000	.79444	-41.14038
.16250	.58816	-39.90707
.16500	.40698	-39.22228
.16750	.31192	-39.27625
.17000	.23814	-38.37673
.17250	.16164	-35.53406
.17500	.06965	-41.96641
.17750	.08682	-31.75710
.18000	.16331	-31.63761
.18250	.20012	-31.11481
.18500	.11610	-31.98583
.18750	.03297	-31.50[illegible]
.19000	-.00115	-30.41681
.19250	.10632	-30.71000
.19500	.18162	-7.07278
.19750	.19060	28.86746
.20000	.10795	55.53787

```
WOULD YOU LIKE A PLOT, YES OR NO ? YES
```

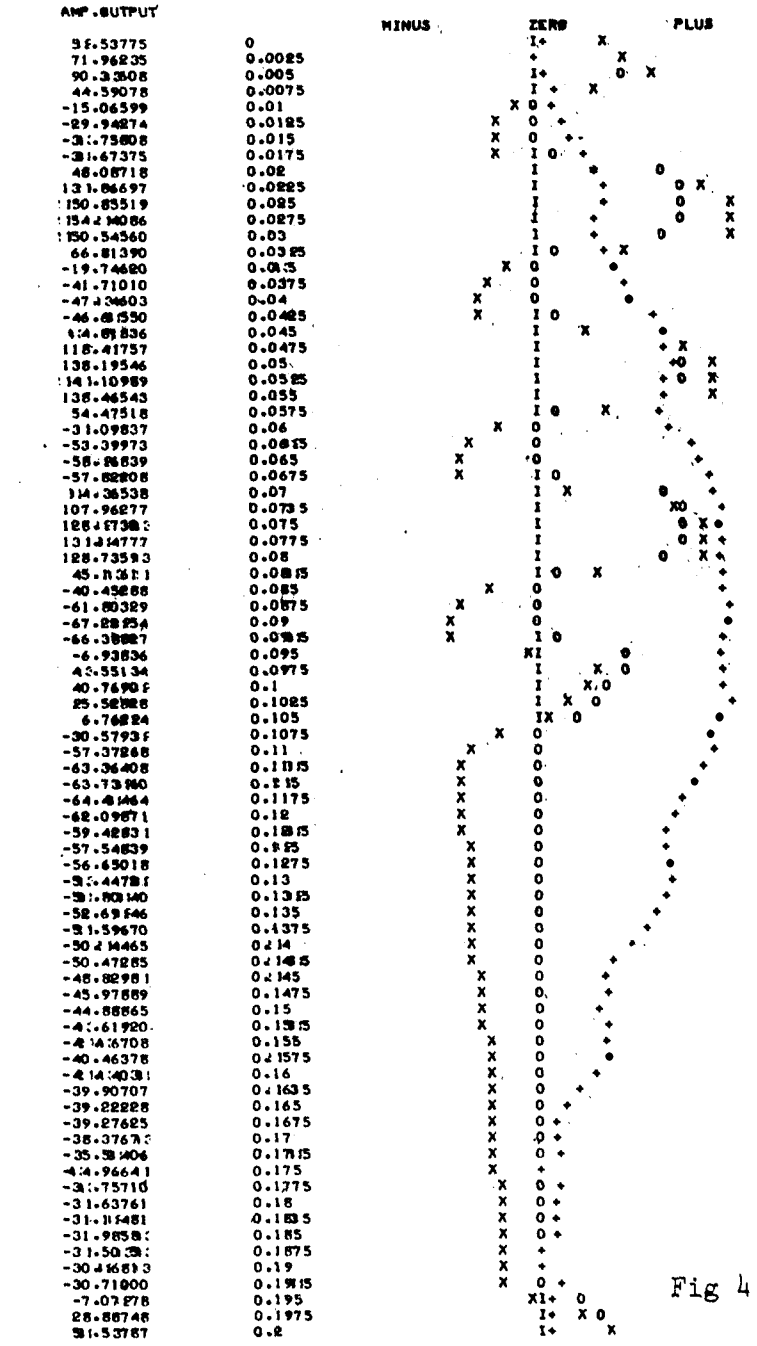

Fig 4.1

```
WHERE '0' IS THE CHOPPED INPUT,
      'X' IS THE 0
```

```
     HARMONIC ANALYSIS OF TIROS SOUNDER SYSTEM

WOULD YOU LIKE INTERMEDIATE RESULTS, YES OR NO ? P

WHAT ARE THE RELATIVE RADIANCES OF SCENE 1, 2 & THE B.B. ? 1,0,0

WHAT ARE THE DETECTOR'S ELEC. & THERMAL T. C.'S ? 10,1

WHAT IS THE CHOPPER FREQ. IN 10'S OF HZ. ? 4

WHAT IS THE CHOPPER PHASE RELATIVE TO THE SCENE EDGE,
'0' IS THE START OF OPEN, '180' IS START OF CLOSED CYCLE ? 270

WHAT IS THE MAX. FREQ. OF INTEREST, UP TO 1000 HZ ? 400

ASSUMING THE AMPLIFIER RESPONSE AS BEFORE -

WHAT ARE THE FREQUENCIES AT POINTS 1, 2, & 3 ? 40,80,1E9

WHAT VALUE SHOULD I USE FOR 'A' ? 1E5

THE OPTIMUM DEMOD. PHASE SHIFT IS AROUND 341.31 DEGREES.
WHAT PHASE SHIFT WOULD YOU LIKE TO TRY? 341.31

WHAT IS THE TIME CONST. OF THE LO-PASS FILTER ? 0

HOW MANY INTEGRATION INTERVALS ? 80
WHAT START & STOP TIMES ? 0,.2

WHAT IS THE INTEGRATION TIME IN SECONDS ? .075

THE AMPLIFIER AND INTEGRATOR OUTPUTS, AT 'TIME', ARE -
```

TIME	INTEGRAL	AMP.OUTPUT
.00000	.15498	36.94835
.00250	.14413	35.15594
.00500	.30920	33.03227
.00750	.33185	-17.52603
.01000	.35118	-51.51613
.01250	.40015	-37.78895
.01500	.50154	-83.36790
.01750	.57160	-114.05938
.02000	.62142	57.03218
.02250	.66309	90.81510
.02500	.68822	61.80891
.02750	.76830	38.70674
.03000	.84304	19.45574
.03250	.90810	-51.87558
.03500	.97969	-88.67549
.03750	1.02665	-63.06389
.04000	1.09911	-38.19180
.04250	1.16147	-19.58609
.04500	1.23950	51.84864
.04750	1.31794	88.11836
.05000	1.34194	65.77781
.05250	1.38403	37.60497
.05500	1.43446	19.37048
.05750	1.50690	-53.34058
.06000	1.60713	-88.42375
.06250	1.65409	-61.36498
.06500	1.67303	-38.02637
.06750	1.69655	-19.84594
.07000	1.76365	51.99234
.07250	1.82164	88.08905
.07500	1.85996	62.86888
.07750	1.82939	37.62140
.08000	1.82392	19.18496
.08250	1.86811	-53.20077
.08500	1.91581	-88.64557
.08750	1.94414	-61.83184
.09000	1.86524	-38.40193
.09250	1.88451	-20.07720
.09500	1.83014	54.40861
.09750	1.86113	90.16992
.10000	1.84930	116.05195
.10250	1.76014	111.74651
.10500	1.69507	-115.43900
.10750	1.67343	-84.68007
.11000	1.65310	-37.54830
.11250	1.60412	-25.21138
.11500	1.50304	-34.54460
.11750	1.43868	-9.53758
.12000	1.38186	-4.90609
.12250	1.34119	41.15060
.12500	1.31606	-.80857
.12750	1.28598	-.80481
.13000	1.16123	1.11755
.13250	1.09618	.74947
.13500	1.03459	.01101
.13750	.97759	.06455
.14000	.90517	.28929
.14250	.84081	-1.00717
.14500	.76477	-.72150
.14750	.68654	.54611
.15000	.66244	.22381
.15250	.62035	.29752
.15500	.56982	1.28377
.15750	.49738	1.21440
.16000	.39715	-.24078
.16250	.45019	.36467
.16500	.33125	.13389
.16750	.30773	-.74789
.17000	.34063	-.86613
.17250	.15264	.57541
.17500	.14431	.13142
.17750	.17489	.28107
.18000	.18035	1.40826
.18250	.13617	1.07453
.18500	.06847	-.01887
.18750	.07013	-.16845
.19000	.13894	.49947
.19250	.18077	-.51597
.19500	.17414	17.71774
.19750	.14315	35.49453
.20000	.15498	36.94835

WOULD YOU LIKE A PLOT, YES OR NO ? YES

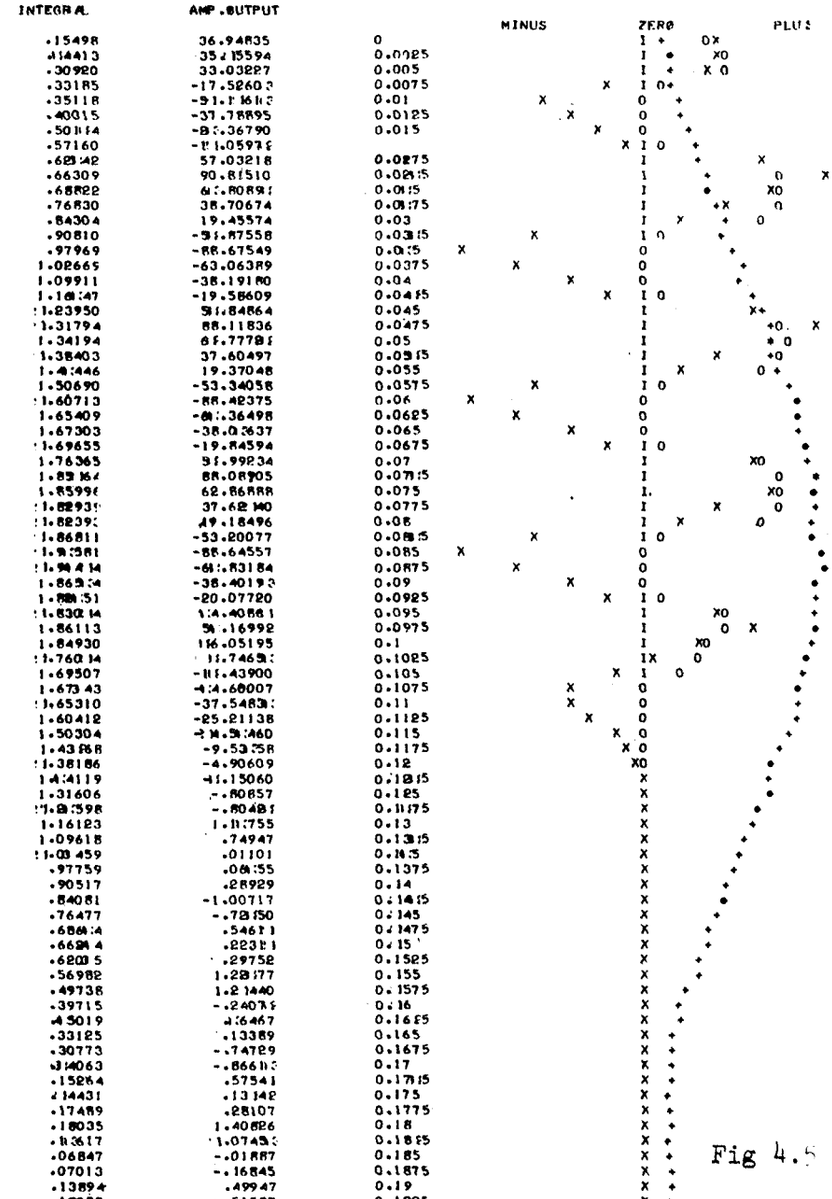

Fig 4.5

HARMONIC ANALYSIS OF TIROS SOUNDER SYSTEM

WOULD YOU LIKE INTERMEDIATE RESULTS, YES OR NO ? N

WHAT ARE THE RELATIVE RADIANCES OF SCENE (1, 2 & THE (1.R. ? 1,0,0

WHAT ARE THE DETECTOR'S FLEC. & THERMAL T. C.'S ? 10,1

WHAT IS THE CHOPPER FREQ. IN 10'S OF HZ. ? 4

WHAT IS THE CHOPPER PHASE RELATIVE TO THE SCENE EDGE,
'0' IS THE START OF OPEN, '180' IS START OF CLOSED CYCLE ? 270

WHAT IS THE MAX. FREQ. OF INTEREST, UP TO 1000 HZ ? 400

ASSUMING THE AMPLIFIER RESPONSE AS BEFORE -

WHAT ARE THE FREQUENCIES AT POINTS (1, 11, & 3 ? 40,40,1E9

WHAT VALUE SHOULD I USE FOR 'A' ? 1E4

THE OPTIMUM DEMOD. PHASE SHIFT IS AROUND 359.75 DEGREES.
WHAT PHASE SHIFT WOULD YOU LIKE TO TRY? 359.75

WHAT IS THE TIME CONST. OF THE LO-PASS FILTER ? 0

HOW MANY INTEGRATION INTERVALS ? 80
WHAT START & STOP TIMES ? 0,.2

WHAT IS THE INTEGRATION TIME IN SECONDS ? .075

THE AMPLIFIER AND INTEGRATOR OUTPUTS, AT 'TIME', ARE

TIME	INTEGRAL	AMP.OUTPUT
.00000	.01583	6.29289
.00250	.03453	6.58154
.00500	.04043	6.60338
.00750	.04665	.36299
.01000	.05128	-5.98215
.01250	.05352	-6.34372
.01500	.06417	-5.07727
.01750	.08194	-3.43598
.02000	.09037	5.57631
.02250	.10064	12.97276
.02500	.10397	12.04789
.02750	.11143	9.19992
.03000	.12776	6.17104
.03250	.13766	-3.86814
.03500	.15201	-11.93918
.03750	.15855	-12.47037
.04000	.16526	-8.85640
.04250	.17957	-6.01870
.04500	.18949	3.94863
.04750	.20587	11.91302
.05000	.21312	11.43844
.05250	.22657	8.77336
.05500	.22683	5.96851
.05750	.23531	-4.03291
.06000	.25317	-11.97657
.06250	.26360	-11.54078
.06500	.26585	-8.05850
.06750	.27049	-6.06532
.07000	.27681	3.95880
.07250	.29278	11.90058
.07500	.30124	11.45510
.07750	.29720	8.77032
.08000	.29397	5.95428
.08250	.29651	-4.02869
.08500	.30784	-11.99613
.08750	.31461	-11.48587
.09000	.30767	-8.88678
.09250	.29640	-6.07883
.09500	.29399	1.70314
.09750	.29726	6.82955
.10000	.30125	5.81430
.10250	.29855	1.27083
.10500	.27665	-.45347
.10750	.27045	-4.24176
.11000	.26580	-6.03185
.11250	.26356	-5.17348
.11500	.25291	-3.77451
.11750	.23314	-2.71493
.12000	.22671	-1.69754
.12250	.21644	-.95876
.12500	.21311	-.53069
.12750	.20565	-.34831
.13000	.18932	-.02013
.13250	.17942	-.01054
.13500	.16507	-.07488
.13750	.15853	-.04683
.14000	.15188	.00462
.14250	.13751	-.13221
.14500	.12759	-.06985
.14750	.11121	.10098
.15000	.10396	.07876
.15250	.10051	.07852
.15500	.09025	.18140
.15750	.08177	.15413
.16000	.06391	-.03743
.16250	.05328	.02359
.16500	.05123	.00671
.16750	.04659	-.02558
.17000	.04027	-.08001
.17250	.03430	.18343
.17500	.01584	.06209
.17750	.01988	.08146
.18000	.02311	.19469
.18250	.02057	.14990
.18500	.00934	-.01787
.18750	.00347	-.03131
.19000	.00941	.01500
.19250	.02068	-.07207
.19500	.02309	11.17547
.19750	.01962	5.18446
.20000	.01583	6.29289

WOULD YOU LIKE A PLOT, YES OR NO ? YES

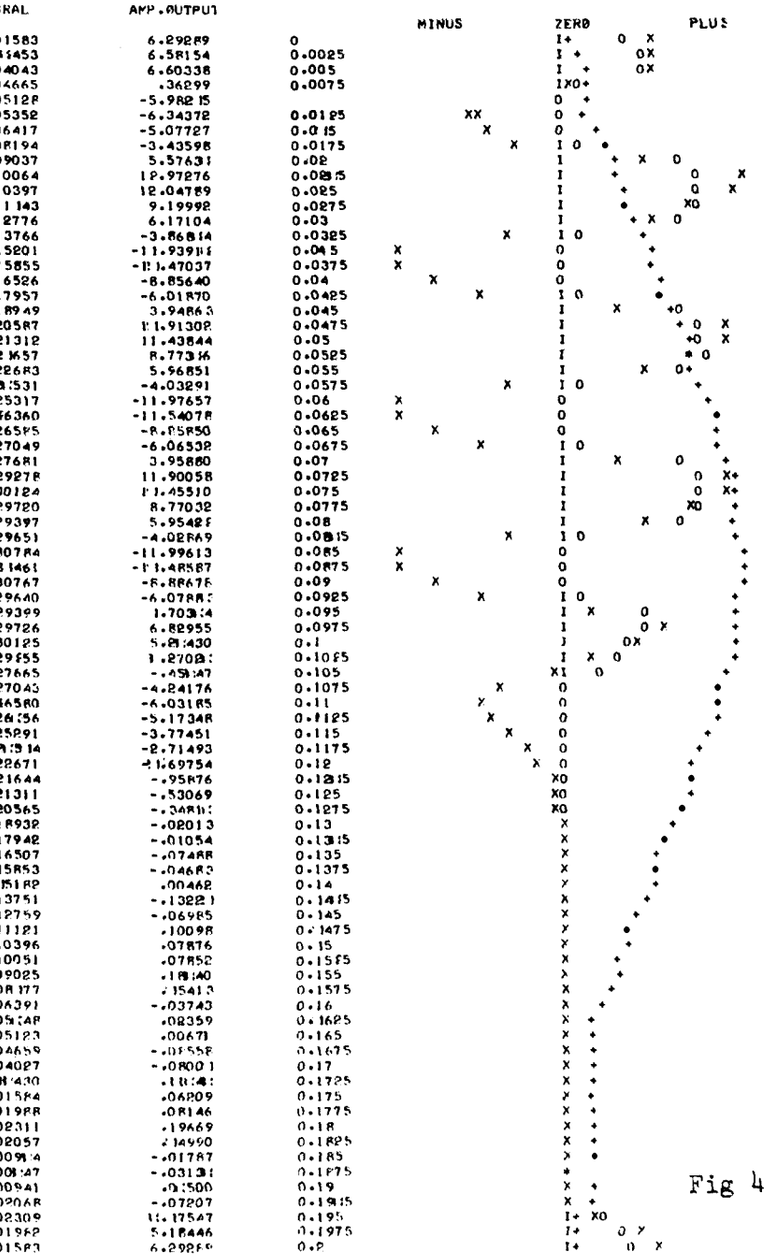

WHERE '0' IS THE CHOPPED INPUT,
'X' IS THE ~~INTEGRATOR OUTPUT~~,
'+' IS THE INTEGRATOR OUTPUT,
AND '*' IS AN X & + SUPERPOSITION.

Fig 4.6

HARMONIC ANALYSIS OF TIROS SOUNDER SYSTEM

WOULD YOU LIKE INTERMEDIATE RESULTS, YES OR NO ? P

WHAT ARE THE RELATIVE RADIANCES OF SCENE 1, 2 & THE B.B. ? 1,0,0

WHAT ARE THE DETECTOR'S ELEC. & THERMAL T. C.'S ? 10,1

WHAT IS THE CHOPPER FREQ. IN 10'S OF HZ. ? 4

WHAT IS THE CHOPPER PHASE RELATIVE TO THE SCENE EDGE,
'0' IS THE START OF OPEN, '180' IS START OF CLOSED CYCLE ? 270

WHAT IS THE MAX. FREQ. OF INTEREST, UP TO 1000 HZ ? 400

ASSUMING THE AMPLIFIER RESPONSE AS BEFORE -

WHAT ARE THE FREQUENCIES AT POINTS 1, 2, & 3 ? 80,40,1E9

WHAT VALUE SHOULD I USE FOR 'A' ? 1E4

THE OPTIMUM DEMOD. PHASE SHIFT IS AROUND 18.18 DEGREES.
WHAT PHASE SHIFT WOULD YOU LIKE TO TRY? 18.18

WHAT IS THE TIME CONST. OF THE LO-PASS FILTER ? 0

HOW MANY INTEGRATION INTERVALS ? 80
WHAT START & STOP TIMES ? 0,.2

WHAT IS THE INTEGRATION TIME IN SECONDS ? .075

THE AMPLIFIER AND INTEGRATOR OUTPUTS, AT 'TIME', ARE -

TIME	INTEGRAL	AMP.OUTPUT
.00000	.01615	8.80739
.00250	.01913	10.16459
.00500	.03749	11.04415
.00750	.05185	4.81594
.01000	.05866	-3.84872
.01250	.06242	-6.51599
.01500	.06736	-6.75078
.01750	.08799	-5.85417
.02000	.10590	4.02286
.02250	.11659	14.64881
.02500	.12593	16.73031
.02750	.13353	15.47859
.03000	.15095	12.85431
.03250	.16695	1.38895
.03500	.18309	-10.55597
.03750	.19707	-13.70566
.04000	.20107	-10.23101
.04250	.21493	-11.24514
.04500	.23112	-.21611
.04750	.24706	11.30467
.05000	.26456	14.59364
.05250	.27221	10.55417
.05500	.28151	11.47456
.05750	.29218	.31658
.06000	.30999	-11.28115
.06250	.33071	-14.29436
.06500	.33579	-13.61798
.06750	.33948	-11.58354
.07000	.34628	-.41907
.07250	.36051	11.16081
.07500	.37897	14.15851
.07750	.38210	13.46557
.08000	.37539	11.40230
.08250	.37358	.46954
.08500	.38349	-12.33314
.08750	.39795	-14.26458
.09000	.39807	-11.65630
.09250	.38363	-11.60048
.09500	.37363	-2.92980
.09750	.37531	4.85564
.10000	.38206	5.46676
.10250	.37908	3.44863
.10500	.36073	.62810
.10750	.34636	-4.13388
.11000	.33955	-7.46592
.11250	.33579	-7.74816
.11500	.33085	-6.88131
.11750	.31022	-5.81808
.12000	.29231	-4.51499
.12250	.28162	-3.30417
.12500	.27229	-2.45617
.12750	.26468	-1.86536
.13000	.24716	-1.18206
.13250	.23126	-.89688
.13500	.21512	-.75867
.13750	.20114	-.56850
.14000	.19714	-.38022
.14250	.18328	-.42710
.14500	.16709	-.27601
.14750	.15115	-.02002
.15000	.13365	.02152
.15250	.11600	.05906
.15500	.11670	.19768
.15750	.10603	.17554
.16000	.08822	-.03349
.16250	.06750	.02021
.16500	.06842	.00469
.16750	.05873	-.08870
.17000	.05193	-.07304
.17250	.03770	.15384
.17500	.01924	.11563
.17750	.01611	.14766
.18000	.02283	.26994
.18250	.01463	.28157
.18500	.01472	.01859
.18750	.00026	-.00958
.19000	.00015	.04307
.19250	.01458	-.07176
.19500	.02458	2.43781
.19750	.02290	6.45902
.20000	.01615	8.80740

WOULD YOU LIKE A PLOT, YES OR NO ? YES

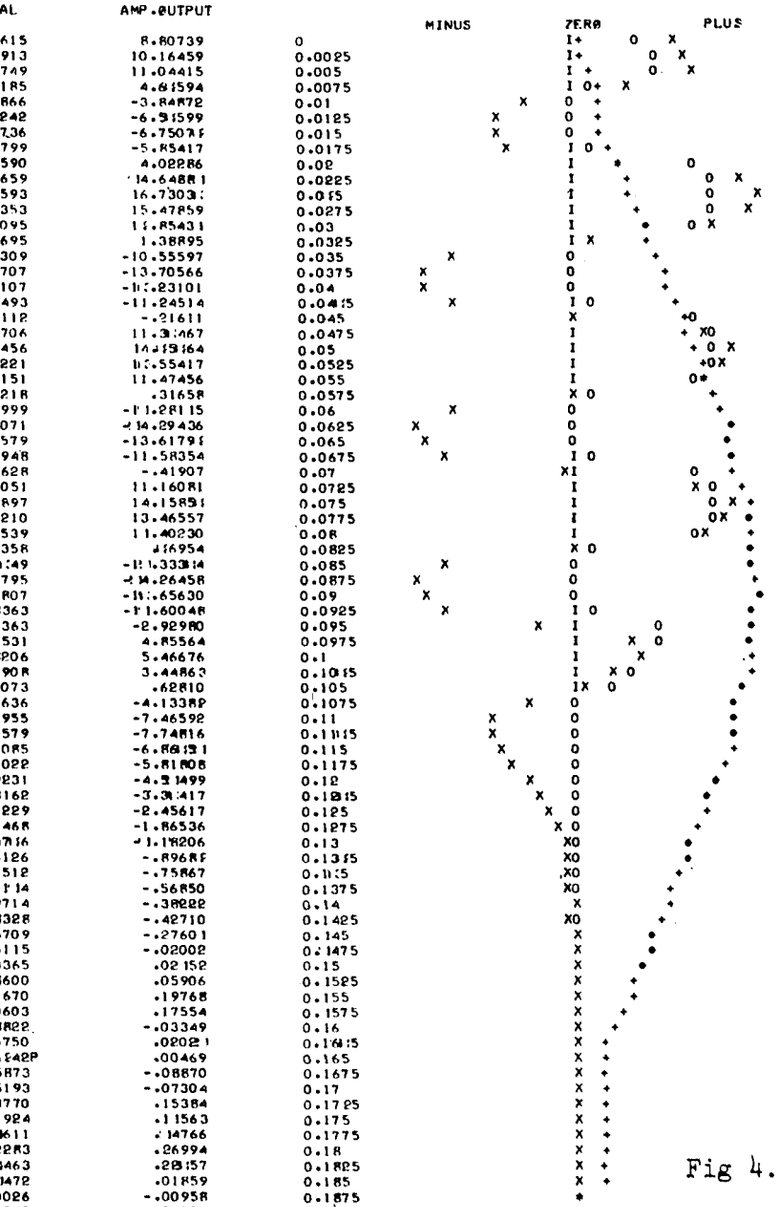

Fig 4.7

```
ASSUMING THE AMPLIFIER RESPONSE AS BEFORE -

WHAT ARE THE FREQUENCIES AT POINTS 1, 2, & 3 ? 1E-9,80

WHAT VALUE SHOULD I USE FOR 'A' ? 1E4

THE OPTIMUM DEMOD. PHASE SHIFT IS AROUND 24.26 DEGREES
WHAT PHASE SHIFT WOULD YOU LIKE TO TRY? 24.26

WHAT IS THE TIME CONST. OF THE LO-PASS FILTER ? 0

HOW MANY INTEGRATION INTERVALS ? 40
WHAT START & STOP TIMES ? .1725,.1925

WHAT IS THE INTEGRATION TIME IN SECONDS ? .075

THE AMPLIFIER AND INTEGRATOR OUTPUTS, AT 'TIME', ARE -
```

TIME	INTEGRAL	AMP.OUTPUT
.17250	.16164	-35.55407
.17300	.13893	-35.94873
.17350	.11614	-35.52096
.17400	.09575	-34.81721
.17450	.07986	-34.63015
.17500	.06965	-34.96641
.17550	.06523	-35.07969
.17600	.06584	-34.45283
.17650	.07029	-33.51435
.17700	.07750	-33.18490
.17750	.08682	-33.75710
.17800	.09816	-34.44796
.17850	.11169	-34.21965
.17900	.12751	-33.97788
.17950	.14512	-32.76021
.18000	.16331	-31.63721
.18050	.18019	-30.52904
.18100	.19066	-30.87544
.18150	.20192	-31.91924
.18200	.20403	-31.78277
.18250	.20012	-31.11481
.18300	.19131	-31.74993
.18350	.17957	-30.10311
.18400	.16557	-33.84698
.18450	.15115	-30.27084
.18500	.13610	-31.98581
.18550	.11977	-31.18907
.18600	.10135	-31.37841
.18650	.08007	-31.94757
.18700	.05674	-35.03548
.18750	.03297	-32.50039
.18800	.01147	-31.05115
.18850	-.00467	-31.17465
.18900	-.01282	-31.50612
.18950	-.01158	-31.25741
.19000	-.00115	-30.26813
.19050	.01667	-29.39409
.19100	.03905	-29.62231
.19150	.06294	-30.84976
.19200	.08583	-31.70202
.19250	.10632	-30.71000

```
WOULD YOU LIKE A PLOT, YES OR NO ? YES
```

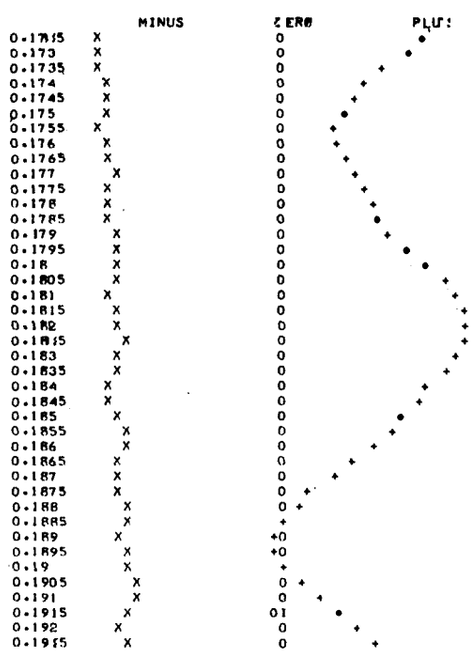


```
ASSUMING THE AMPLIFIER RESPONSE AS BEFORE -

WHAT ARE THE FREQUENCIES AT POINTS 1, 2, & 3 ? 20,40,1E9

WHAT VALUE SHOULD I USE FOR 'A' ? 1E4

THE OPTIMUM DEMOD. PHASE SHIFT IS AROUND 18.18 DEGREES.
WHAT PHASE SHIFT WOULD YOU LIKE TO TRY? 18.18

WHAT IS THE TIME CONST. OF THE LO-PASS FILTER ? 0

HOW MANY INTEGRATION INTERVALS ? 40
WHAT START & STOP TIMES ? .175,.---------.175,.195

WHAT IS THE INTEGRATION TIME IN SECONDS ? .075

THE AMPLIFIER AND INTEGRATOR OUTPUTS, AT 'TIME', ARE -
```

TIME	INTEGRAL	AMP.OUTPUT
.17500	.01954	.11564
.17550	.01738	.08662
.17600	.01622	.13488
.17650	.01568	.20276
.17700	.01567	.22201
.17750	.01611	.14766
.17800	.01697	.05556
.17850	.01817	.05380
.17900	.01963	.15871
.17950	.02154	.26836
.18000	.02283	.26994
.18050	.02419	.16409
.18100	.02515	.06563
.18150	.02557	.07642
.18200	.02539	.17086
.18250	.02463	.28157
.18300	.02336	.14389
.18350	.02166	-.01563
.18400	.01963	-.12021
.18450	.01730	-.09053
.18500	.01472	.01859
.18550	.01189	.08585
.18600	.00888	.05476
.18650	.00579	-.01849
.18700	.00284	-.04504
.18750	.00036	-.00958
.18800	-.00166	.02221
.18850	-.00270	-.00319
.18900	-.00273	-.05229
.18950	-.00174	-.04370
.19000	.00015	.04307
.19050	.00269	.12348
.19100	.00564	.09328
.19150	.00872	-.04381
.19200	.01174	-.15088
.19250	.01458	-.07176
.19300	.01718	.28457
.19350	.01952	.68346
.19400	.02157	1.17858
.19450	.02328	1.72340
.19500	.02458	1.43781

```
WOULD YOU LIKE A PLOT, YES OR NO ? YE---YES
```

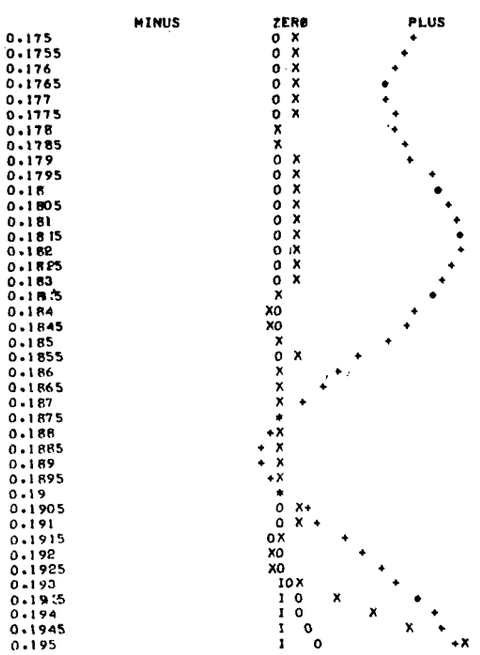

Fig 4.8

WHAT IS THE INTEGRATION TIME IN SECONDS ? .05

WOULD YOU LIKE A PLOT, YES OR NO ? YES

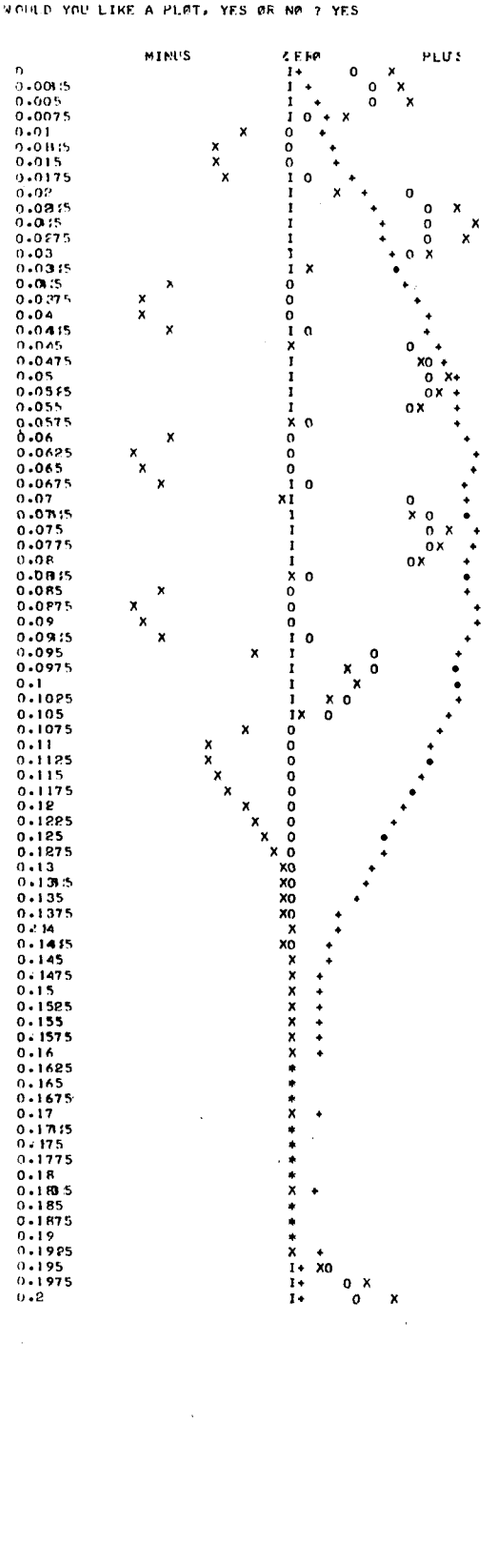

THE AMPLIFIER AND INTEGRATOR OUTPUTS, AT 'TIME', ARE -

TIME	INTEGRAL	AMP.OUTPUT
.00000	.01833	8.80739
.00250	.02285	10.16459
.00500	.03887	11.04415
.00750	.05144	4.63594
.01000	.05923	-3.84878
.01250	.06550	-6.53599
.01500	.07046	-6.75072
.01750	.08856	-5.85417
.02000	.10539	4.02286
.02250	.11794	14.64881
.02500	.12964	16.73033
.02750	.13575	15.47859
.03000	.14740	11.85431
.03250	.15995	1.38895
.03500	.17668	-10.55597
.03750	.19490	-13.70566
.04000	.19995	-13.23101
.04250	.20615	-11.34514
.04500	.21406	-.21611
.04750	.22643	11.31467
.05000	.24252	14.85564
.05250	.25714	13.55417
.05500	.26620	11.47456
.05750	.26784	.31658
.06000	.25717	-11.28115
.06250	.26738	-14.29436
.06500	.26645	-13.61795
.06750	.25968	-11.58354
.07000	.25796	-.41907
.07250	.26321	11.16081
.07500	.27137	14.25891
.07750	.27142	11.46557
.08000	.26330	11.40230
.08250	.25796	.36954
.08500	.25964	-11.33334
.08750	.26638	-14.36458
.09000	.26745	-13.65630
.09250	.25728	-11.60048
.09500	.24790	-8.92980
.09750	.24618	4.85564
.10000	.24714	5.46676
.10250	.24262	13.44803
.10500	.21661	.62810
.10750	.21414	-4.13381
.11000	.20614	-7.46591
.11250	.19998	-7.74816
.11500	.19502	-6.88121
.11750	.17689	-5.81808
.12000	.16008	-4.21499
.12250	.14754	-3.31417
.12500	.13583	-1.45617
.12750	.12972	-1.86536
.13000	.11808	-1.18206
.13250	.10552	-.89688
.13500	.08879	-.75867
.13750	.07058	-.56850
.14000	.06552	-.38282
.14250	.05933	-.45710
.14500	.05141	-.27601
.14750	.03905	-.02001
.15000	.02296	.02151
.15250	.01814	.05906
.15500	.01928	.19768
.15750	.01764	.17554
.16000	.00831	-.03349
.16250	-.00191	.02021
.16500	-.00098	.00469
.16750	.00580	-.08870
.17000	.00752	-.07304
.17250	.00227	.15384
.17500	-.00590	.11563
.17750	-.00594	.14766
.18000	.00217	.16994
.18250	.00751	.28157
.18500	.00584	.01859
.18750	-.00090	-.00958
.19000	-.00198	.04307
.19250	.00819	-.03176
.19500	.01758	11.43778
.19750	.01929	6.45901
.20000	.01833	8.80740

Fig 4.9

```
     HARMONIC ANALYSIS OF TIROS SOUNDER SYSTEM

WOULD YOU LIKE INTERMEDIATE RESULTS, YES OR NO ? P

WHAT ARE THE RELATIVE RADIANCES OF SCENE 1, 2 & THE F.B. ? 1,0,0

WHAT ARE THE DETECTOR'S ELEC. & THERMAL T. C.'S ? 10,.1

WHAT IS THE CHOPPER FREQ. IN 10'S OF HZ. ? 4

WHAT IS THE CHOPPER PHASE RELATIVE TO THE SCENE EDGE,
'0' IS THE START OF OPEN, '180' IS START OF CLOSED CYCLE ? 270

WHAT IS THE MAX. FREQ. OF INTEREST, UP TO 1000 HZ ? 400


ASSUMING THE AMPLIFIER RESPONSE AS BEFORE -

WHAT ARE THE FREQUENCIES AT POINTS 1, 2, & 3 ? 20,40,1E9

WHAT VALUE SHOULD I USE FOR 'A' ? 1E4


THE OPTIMUM DEMOD. PHASE SHIFT IS AROUND 16.13 DEGREES.
WHAT PHASE SHIFT WOULD YOU LIKE TO TRY? 16.13


WHAT IS THE TIME CONST. OF THE LO-PASS FILTER ? 0

HOW MANY INTEGRATION INTERVALS ? 80---80
WHAT START & STOP TIMES ? 0,.2

WHAT IS THE INTEGRATION TIME IN SECONDS ? .075

THE AMPLIFIER AND INTEGRATOR OUTPUTS, AT 'TIME', ARE -
```

TIME	INTEGRAL	AMP.OUTPUT
.00000	.16281	89.27074
.00150	.20700	100.69153
.00500	.40455	107.11626
.00750	.54200	41.13903
.01000	.60757	-41.44383
.01150	.63187	-68.86914
.01500	.66856	-69.53481
.01750	.87082	-59.05006
.02000	1.04080	40.09617
.02150	1.15068	144.09156
.02500	1.35779	161.38030
.02750	1.35040	145.39394
.03000	1.54476	116.18179
.03250	1.70426	.09159
.03500	1.86468	*-117.79714
.03750	1.98502	*-146.19364
.04000	1.99866	*-138.18507
.04250	2.13331	*-115.40738
.04500	2.28845	-3.60739
.04750	2.45606	110.50040
.05000	2.64147	136.80721
.05250	2.73022	126.83187
.05500	2.84045	101.41601
.05750	2.95104	-9.35620
.06000	3.13153	*-120.60669
.06150	3.32304	*-150.52850
.06500	3.43576	*-140.43471
.06750	3.37903	*-117.12908
.07000	.44457	-3.95935
.07250	3.59721	110.44365
.07500	3.78441	137.53085
.07750	3.81348	127.59481
.08000	3.75044	104.31355
.08250	3.74048	-8.28678
.08500	3.84360	*-123.56144
.08750	3.98529	**148.69566
.09000	3.97369	*-139.31564
.09150	3.82954	*-115.84304
.09500	3.78521	-27.43456
.09750	3.75771	49.98730
.10000	3.81631	54.84531
.10150	3.77212	38.62881
.10500	3.57458	4.98493
.10750	3.43712	-41.20927
.11000	3.37186	-74.11154
.11150	3.47815	-75.41409
.11500	3.31056	-64.79755
.11750	3.10830	-50.05118
.12000	3.03838	-39.01598
.12150	2.82844	-26.52389
.12500	2.72133	-17.47417
.12750	2.62872	-11.07191
.13000	2.44436	-4.08051
.13150	2.27486	-2.16179
.13500	2.11445	.22848
.13750	1.99410	1.08755
.14000	1.98046	1.86567
.14150	1.84581	1.30616
.14500	1.69067	4.67766
.14750	1.52307	7.06529
.15000	1.36665	7.29869
.15250	1.13890	7.49053
.15500	1.13867	8.68518
.15750	1.02808	8.28590
.16000	.84759	6.03798
.16250	.65608	6.42340
.16500	.63377	6.11236
.16750	.60009	5.02790
.17000	.50455	5.02973
.17150	.38191	7.11507
.17500	.19471	6.57535
.17750	.16565	6.72757
.18000	.22869	7.78781
.18150	.23864	7.15631
.18500	.11552	4.99169
.18750	-.00616	4.58956
.19000	.00544	5.00328
.19150	.14959	3.74283
.19500	.24391	28.50520
.19750	.22142	67.58157
.20000	.16281	89.27081

```
WOULD YOU LIKE A PLOT, YES OR NO ? Y
```

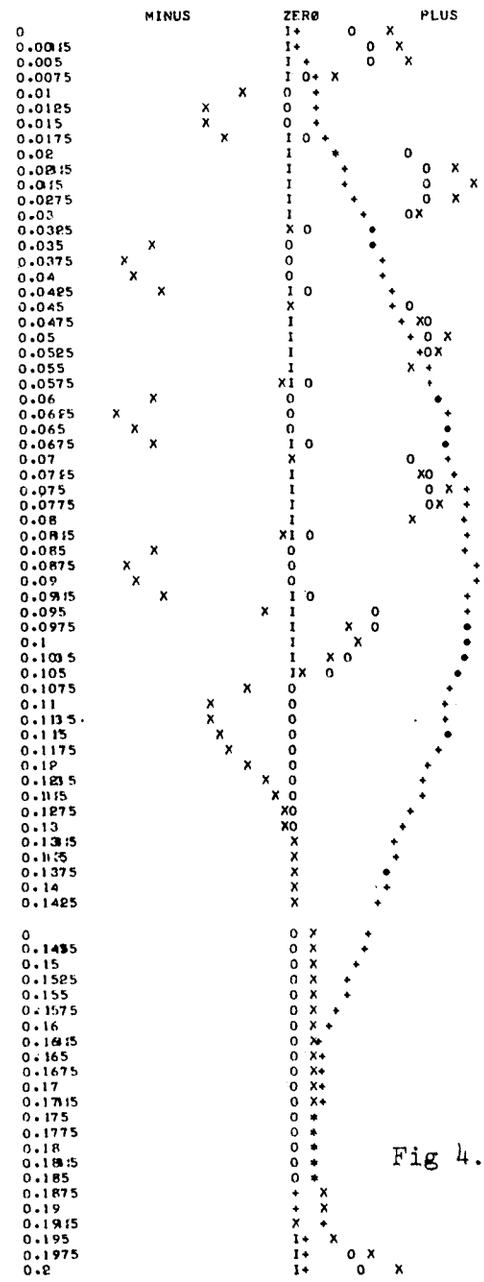


```
WHERE 'O' IS THE CHOPPED INPUT,
  X
```

Fig 4.10

```
      HARMONIC ANALYSIS OF TIROS SOUNDER SYSTEM

WOULD YOU LIKE INTERMEDIATE RESULTS, YES OR NO ? P

WHAT ARE THE RELATIVE RADIANCES OF SCENE 1, 2 & THE B.B. ? 1,0,0

WHAT ARE THE DETECTOR'S ELEC. & THERMAL T. C.'S ? 10,2

WHAT IS THE CHOPPER FREQ. IN 10'S OF HZ. ? 4

WHAT IS THE CHOPPER PHASE RELATIVE TO THE SCENE EDGE,
'0' IS THE START OF OPEN, '180' IS START OF CLOSED CYCLE ? 270

WHAT IS THE MAX. FREQ. OF INTEREST, UP TO 1000 HZ ? 400


ASSUMING THE AMPLIFIER RESPONSE AS BEFORE -

WHAT ARE THE FREQUENCIES AT POINTS 1, 2, & 3 ? 20,40,1E9

WHAT VALUE SHOULD I USE FOR 'A' ? 1E4


THE OPTIMUM DEMOD. PHASE SHIFT IS AROUND 18.3 DEGREES.
WHAT PHASE SHIFT WOULD YOU LIKE TO TRY? 18.3


WHAT IS THE TIME CONST. OF THE LO-PASS FILTER ? 0

HOW MANY INTEGRATION INTERVALS ? 80
WHAT START & STOP TIMES ? 0,.2

WHAT IS THE INTEGRATION TIME IN SECONDS ? .075

                                                    WOULD YOU LIKE A PLOT, YES OR NO ? YES
THE AMPLIFIER AND INTEGRATOR OUTPUTS, AT 'TIME', ARE -
```

TIME	INTEGRAL	AMP.OUTPUT
.00000	.00807	4.39328
.00250	.00952	5.07780
.00500	.01866	5.51431
.00750	.02586	11.32049
.01000	.02927	11.91695
.01250	.03118	11.15904
.01500	.03370	-3.37568
.01750	.04408	-2.93145
.02000	.05301	8.00604
.02250	.05834	7.31538
.02500	.06297	8.37681
.02750	.06672	7.76050
.03000	.07537	6.45733
.03250	.08337	.72952
.03500	.09144	-5.34639
.03750	.09848	-6.82914
.04000	.10057	-6.60038
.04250	.10751	-5.61317
.04500	.11563	-.10481
.04750	.12358	5.67460
.05000	.13289	7.14184
.05250	.13608	6.80139
.05500	.14068	5.76953
.05750	.14600	.19465
.06000	.15489	-5.60820
.06250	.16529	-7.12315
.06500	.16792	-6.79379
.06750	.16978	-5.78465
.07000	.17319	-.20664
.07250	.18027	5.58719
.07500	.18949	7.09414
.07750	.19106	6.75648
.08000	.18769	5.73175
.08250	.18677	.17043
.08500	.19171	-5.64499
.08750	.19895	-7.10899
.09000	.19904	-6.81370
.09250	.19183	-5.79384
.09500	.18691	-1.46332
.09750	.18763	3.43048
.10000	.19103	2.73949
.10250	.19958	13.73329
.10500	.18045	.31430
.10750	.17325	-15.05777
.11000	.16984	-3.71771
.11250	.16792	-3.87368
.11500	.16541	-3.43547
.11750	.15508	-2.91717
.12000	.14610	-2.66877
.12250	.14076	-1.68072
.12500	.13614	-1.14450
.12750	.13238	-.94941
.13000	.12374	-.60871
.13250	.11574	-.46679
.13500	.10767	-.39836
.13750	.10063	-.30157
.14000	.09654	-.21071
.14250	.09159	-.23335
.14500	.08348	-.15791
.14750	.07553	-.02994
.15000	.06682	-.00913
.15250	.06303	.00969
.15500	.05843	.07909
.15750	.05311	.06808
.16000	.04421	-.03643
.16250	.03381	-.00956
.16500	.03119	-.01729
.16750	.02933	-.06396
.17000	.02592	-.05608
.17250	.01883	.05747
.17500	.00962	.03847
.17750	.00805	.05461
.18000	.01141	.11586
.18250	.01204	.09829
.18500	.00739	-.00967
.18750	.00016	-.02378
.19000	.00007	.00268
.19250	.00728	-.05477
.19500	.01230	1.20061
.19750	.01168	3.21419
.20000	.00807	4.39328

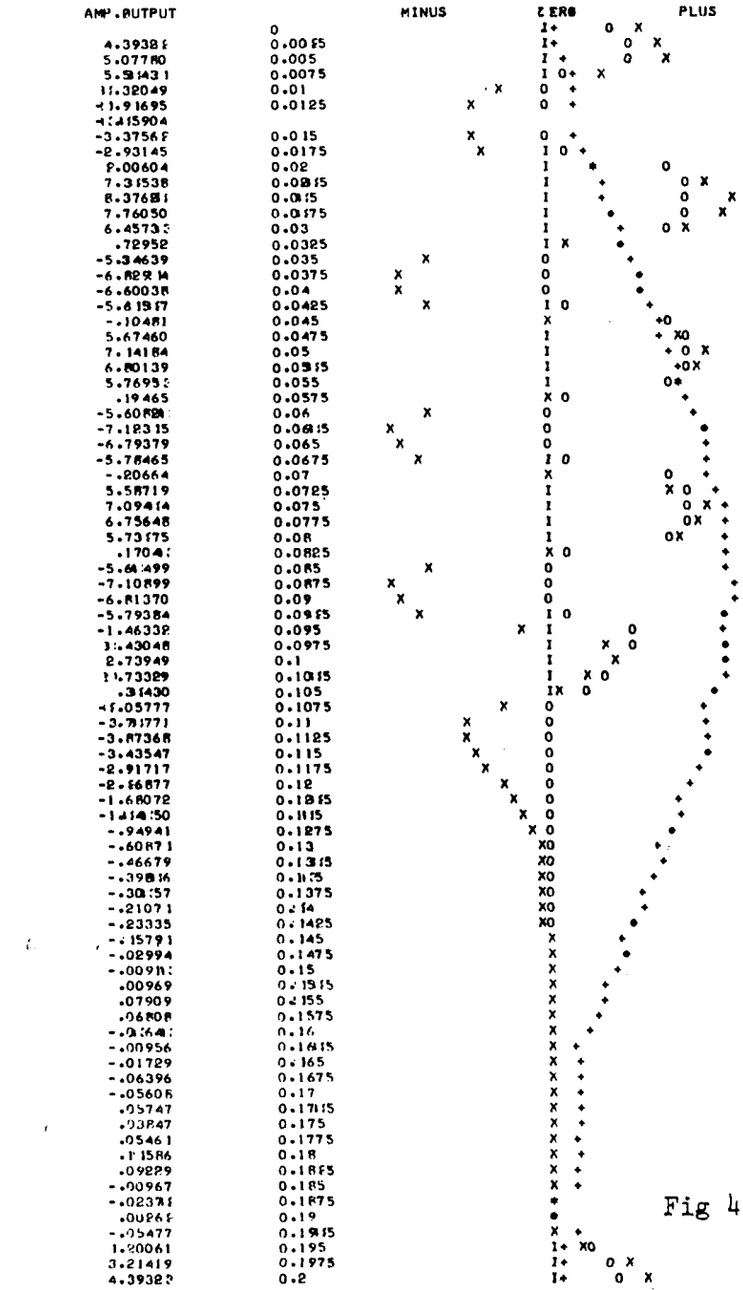

Fig 4.11

```
     HARMONIC ANALYSIS OF TIROS SOUNDER SYSTEM

WOULD YOU LIKE INTERMEDIATE RESULTS, YES OR NO ? P

WHAT ARE THE RELATIVE RADIANCES OF SCENE 1, 2 & THE B.B. ? 1,0,0

WHAT ARE THE DETECTOR'S ELEC. & THERMAL T. C.'S ? 10,1

WHAT IS THE CHOPPER FREQ. IN 10'S OF HZ. ? 4

WHAT IS THE CHOPPER PHASE RELATIVE TO THE SCENE EDGE,
'0' IS THE START OF OPEN, '180' IS START OF CLOSED CYCLE ? 270

WHAT IS THE MAX. FREQ. OF INTEREST, UP TO 1000 HZ ? 400


ASSUMING THE AMPLIFIER RESPONSE AS BEFORE -

WHAT ARE THE FREQUENCIES AT POINTS 1, 2, & 3 ? 20,40,500

WHAT VALUE SHOULD I USE FOR 'A' ? 1E4


THE OPTIMUM DEMOD. PHASE SHIFT IS AROUND 22.76 DEGREES.
WHAT PHASE SHIFT WOULD YOU LIKE TO TRY? 22.76


WHAT IS THE TIME CONST. OF THE LO-PASS FILTER ? 0

HOW MANY INTEGRATION INTERVALS ? 80
WHAT START & STOP TIMES ? 0,.2

WHAT IS THE INTEGRATION TIME IN SECONDS ? .075

WOULD YOU LIKE A PLOT, YES OR NO ? YES
```

THE AMPLIFIER AND INTEGRATOR OUTPUTS, AT 'TIME', ARE -

TIME	INTEGRAL	AMP.OUTPUT
.00000	.01521	8.59219
.00250	.01762	10.03710
.00500	.03454	11.13062
.00750	.05035	5.78083
.01000	.05738	-3.13249
.01250	.06101	-6.38105
.01500	.06468	-6.79520
.01750	.08332	-6.22880
.02000	.10239	2.38437
.02250	.11333	13.83314
.02500	.12223	16.71423
.02750	.13154	15.74429
.03000	.14788	13.43541
.03250	.16421	3.22841
.03500	.17988	-9.59367
.03750	.19402	-13.56009
.04000	.19883	-13.41259
.04250	.21020	-11.74937
.04500	.22666	-2.00735
.04750	.24191	10.41833
.05000	.25958	14.13314
.05250	.27015	13.75898
.05500	.27894	11.99175
.05750	.28872	2.11911
.06000	.30555	-10.35435
.06250	.32630	-14.16956
.06500	.33157	-13.81445
.06750	.33565	-12.10310
.07000	.34200	-2.21512
.07250	.35466	10.22867
.07500	.37388	14.04424
.07750	.38008	13.65599
.08000	.37396	11.93250
.08250	.36998	2.05363
.08500	.37911	-10.39147
.08750	.39375	-14.16110
.09000	.39676	-13.83831
.09250	.38874	-12.08335
.09500	.37142	-4.24429
.09750	.37172	4.33899
.10000	.37942	5.59513
.10250	.37702	3.80596
.10500	.36009	1.06653
.10750	.34409	-3.53400
.11000	.33726	-7.29939
.11250	.33362	-7.80627
.11500	.32995	-7.04786
.11750	.31132	-5.96836
.12000	.29224	-4.63121
.12250	.28130	-3.40125
.12500	.27240	-2.52690
.12750	.26309	-1.90122
.13000	.24675	1.23825
.13250	.23043	-.98158
.13500	.21475	-.83821
.13750	.20061	-.62723
.14000	.19580	-.43047
.14250	.18443	-.44779
.14500	.16797	-.23948
.14750	.15272	.01356
.15000	.13505	.05396
.15250	.12449	.08408
.15500	.11569	.20541
.15750	.10591	.12771
.16000	.08909	-.07754
.16250	.06833	-.01776
.16500	.06106	-.02861
.16750	.05898	-.09405
.17000	.05263	-.03170
.17250	.03997	.20322
.17500	.02075	.14308
.17750	.01455	.18707
.18000	.02068	.26465
.18250	.02465	.19319
.18500	.01552	-.03942
.18750	.00088	-.02623
.19000	-.00212	-.00475
.19250	.01189	-.11380
.19500	.02321	1.99749
.19750	.02291	6.09298
.20000	.01521	8.59220

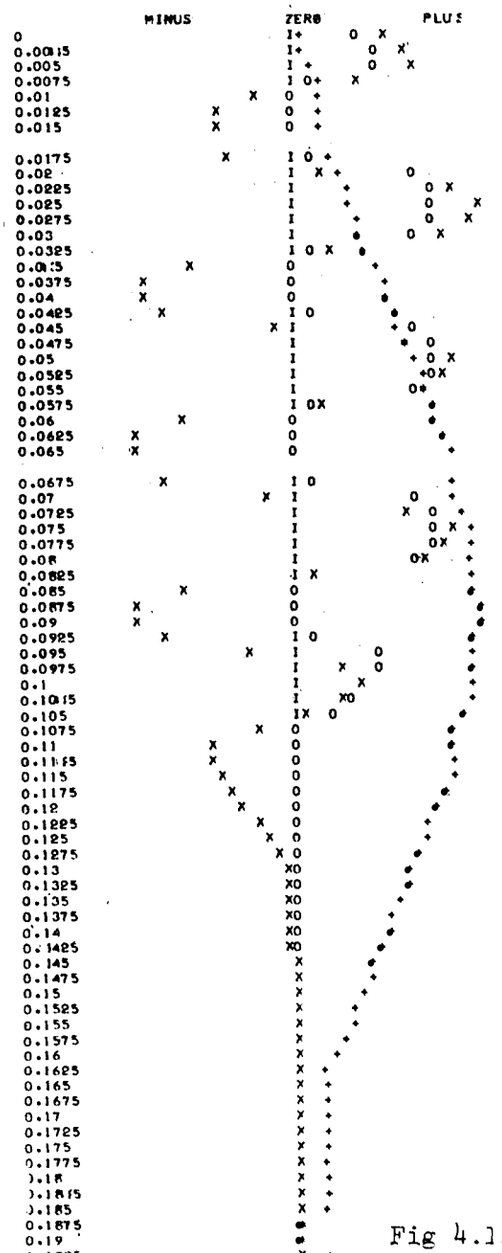

Fig 4.12

begin 75 milliseconds previously, or at .015 second into each scene. The plots show two successive scenes, one from 0 to .1 second of full-scale "hot" radiance, and the second from .1 to .2 second of a radiance equal to the chopper blackbody reference. The relative full-scale value may be read at 0.90 second. In actuality, this value would be adjusted to be the integrator full-scale voltage, by adjusting the amplifier gain accordingly. The position of any plot point is plus or minus one space, due to teletypwriter limitations.

It is worth noting that no unstable dc restoration was required to achieve these results, and the placement of the amplifier poles is not critical. Their stability is important, but easily achieved with good quality temperature-stable components.

In the interest of completeness, one more plot is given in Figure 4.12 of the 1-second thermal time constant detector with the 20 and 40 Hz pole amplifier, with a low-pass pole at 500 Hz.

The resulting amplifier design and Bode plots for a two high-pass pole and amplifier for a one high-pass pole amplifier is shown in Figure 4.1.

Gain stability is better than 0.2% from 0° to $+50^{0}$, provided by temperature stabilizing the detectors to within $1^{o}C$, and by selection of temperature-stable amplifier components. The electronic channel crosstalk will be less than -60 db, by adequate shielding and power decoupling.

The pre-amplifier and post-amplifier were exposed to gamma radiation that simulated the expected Bremsstrahlung flux to be encountered in the TIROS orbit. The test setup is shown in Figure 4.13. Tests were run with several detectors with matched FET's, and also a dummy detector to ascertain the noise component contributed by the pre-amplifier and post-amplifier. The character of the radiation-induced noise in the amplifier was random low frequency "rumble". At the normal Bremsstrahlung level of 0.1 R/hr (silicon), the amplifier broadband rms amplifier noise was expected to increase around 20% and appeared to increase as much as 40%. The results indicate essentially zero noise contribution from the amplifier at the normal Van Allen radiation levels for the TIROS orbit, except for low frequency rumble that will be largely extracted from the signal by the full-wave demodulator. At peak radiation levels the amplifier noise contribution may rise 20 to 40%, but is still significantly lower than the detector radiation induced noise. The fact that the rms noise level seemed to be lower for the amplifier after the radiation test than before indicates surface-effect contributions that can self passivate. Virtually all of the amplifier noise contribution is attributed to the preamplifier FET, since that is the only point where signal levels are low enough to reflect the radiation-induced noise as a significant percentage. Using a high temperature spec FET would eliminate most surface effects, so FET supplier liaison may well direct itself to heat passivating the line of low-noise FET selected for the pre-amplifier.

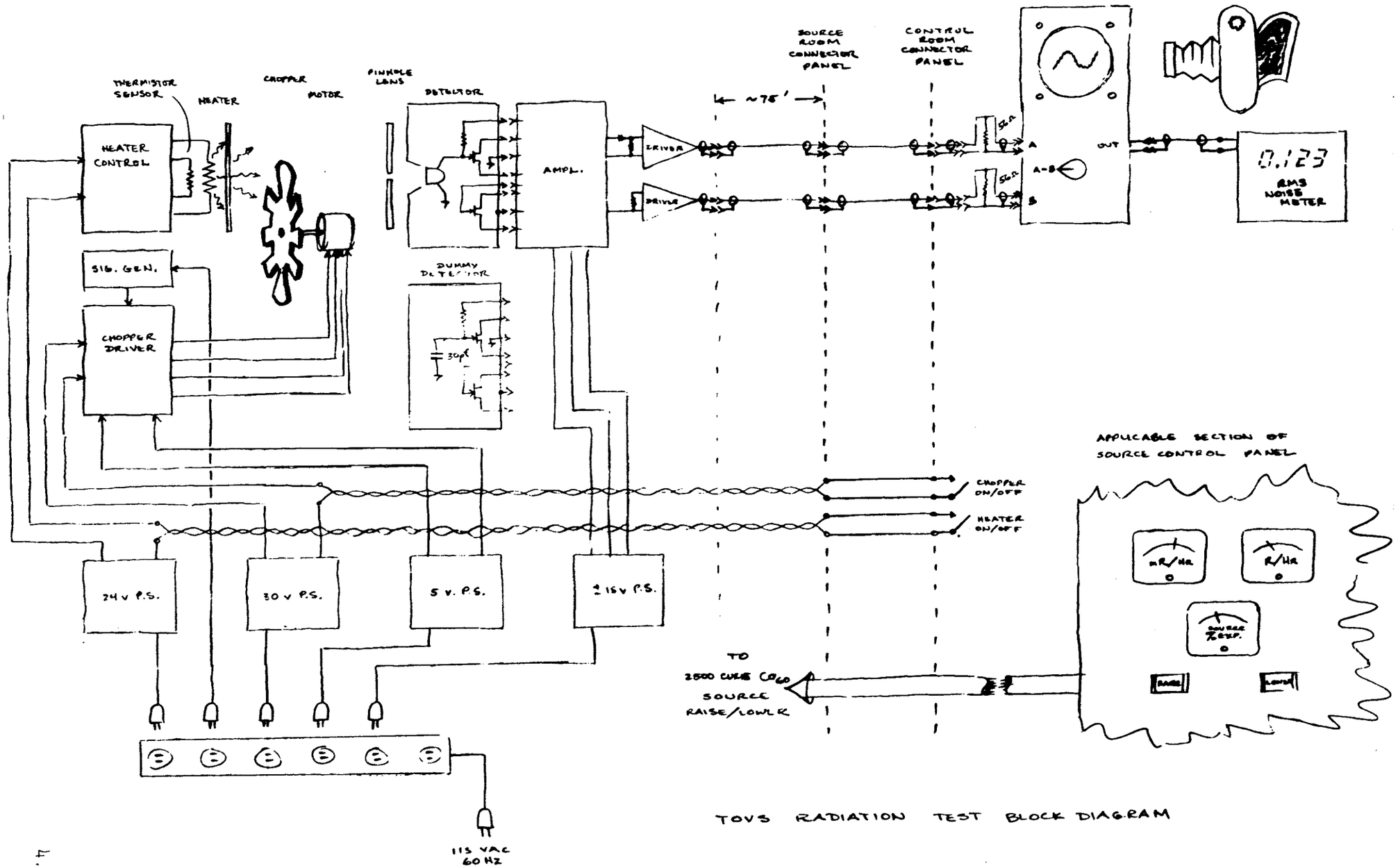

TOVS RADIATION TEST BLOCK DIAGRAM

5.0 Synchronous Demodulator

The synchronous demodulator function can be seen in Figure 4.2. The chopping operation translated the input scene dc component to the 40 Hz carrier, and the demodulation is required to restore it, in order to ascertain the absolute scene radiance. Full-wave demodulation performs this restoration without introducing the potential inaccuracies due to clamping to a reference level. The demodulator is phase-locked to the chopper wheel by a phase reference pickup (PRP) located on the periphery of the wheel. Phase lag is introduced to match the lag experienced by the 40 Hz signal component through the detector and amplifier, and then a PRP and $\overline{\text{PRP}}$ (inverse signal) signal control FET switches alternately, serializing the signal and its inverse at 40 Hz, as shown in Figure 4.2. The schematic is shown in Figure 5.1. It is important that the inverted signal not have an offset relative to the noninverted signal. If the inverter portion of the demodulator does introduce an offset, the full-wave demodulation is about some non-zero level and this dc level shift introduces the effect of partial half-wave demodulation. The results are that a demodulator with an offset will not produce zero output to the integrator with zero input, nor will a dc level into the demodulator produce a zero output. This offset effect will respond not only to dc inputs but to slow transients as well. The residual of scene-to-scene effects after amplifier processing are just such transients, and therefore any half-wave demodulation effect could cause scene-to-scene crosstalk.

Fourier Series Representations:

$$\text{Signal } (e_s) = \frac{a_o}{2} + \Sigma\,(a_n \cos n\,\omega t + b_n \sin n\,\omega t)$$

$$n = 1, 3, 5, 7, \cdots$$

$$\text{PRP } (e_{ref}) = \Sigma\, b_n{}' \sin n\,\omega t \qquad \text{(Full Wave)}$$

$$n = 1, 3, 5, 7, \cdots$$

$$= \frac{A}{2} + \Sigma\, b_n{}' \sin n\,\omega t \qquad \text{(Half Wave)}$$

Forming the products on a term by term basis reveals the terms which contribute to the desired output are of the form $b_n b_n{}' \sin^2 n\,\omega t$.

This can be rewritten as: $\dfrac{b_n b_n{}'(1-\cos 2n\omega t)}{2}$. All other products yield

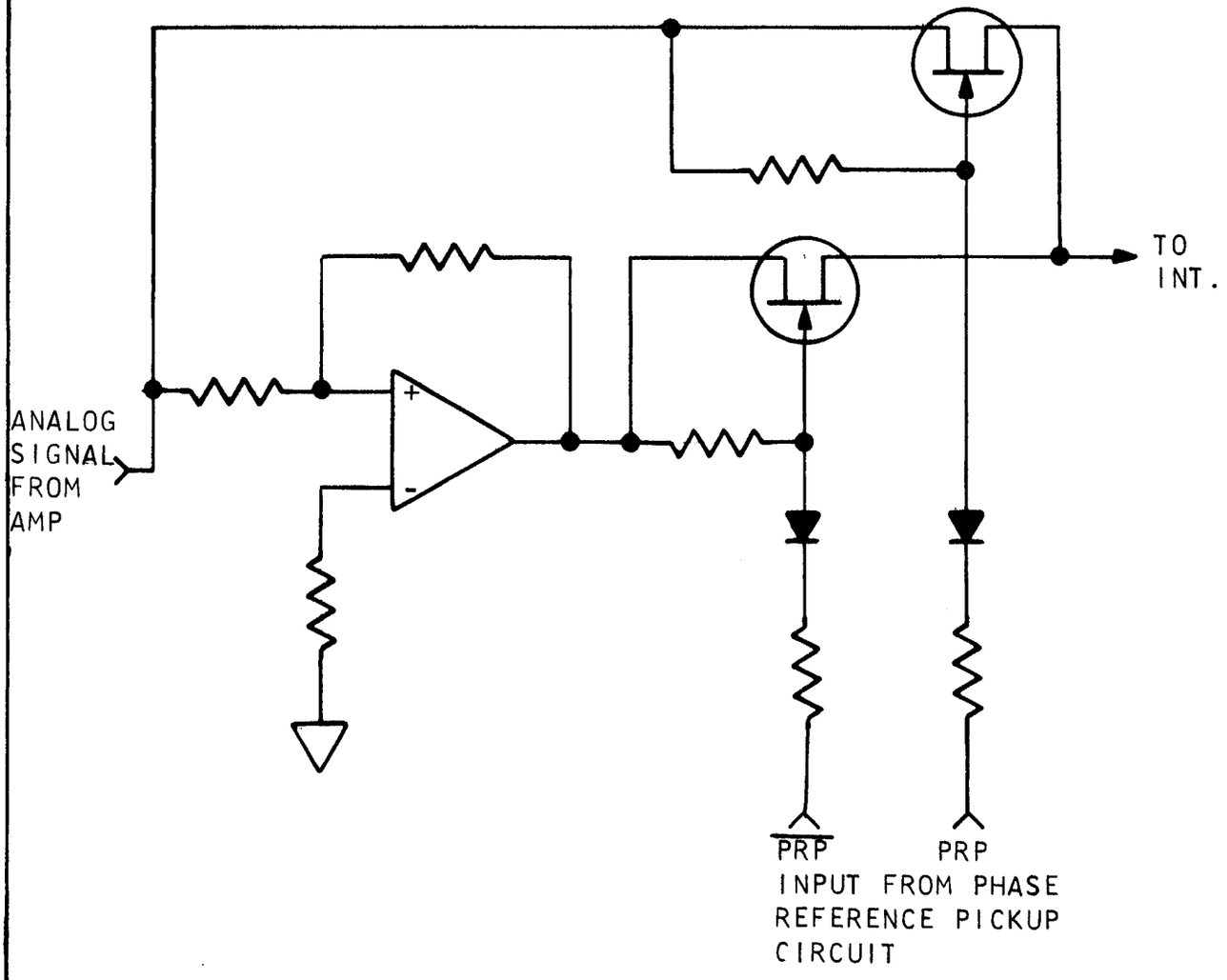

FIGURE 5.1
SYNCHRONOUS
DEMODULATOR

purely ac terms which are subsequently smoothed. The exception is when the $\frac{A}{2}$ term is not zero; then then there is the dc product of $(\frac{a_o}{2})\ K\ (\frac{A}{2})$ where K denotes the strength of the half-wave contamination. Pure full-wave demodulation is needed to prevent any dc bias to the integrator.

It is assumed throughout that the PRP is perfectly symmetrical which, of course, will never be exactly true. Tolerances on chopper blade edge positions and the width of the PRP optical beam produce some uncertainty. The effect of lack of time symmetry in the PRP also adds a dc component to its series representation. It is important to minimize any such lack of symmetry that would also present a dc bias to the integrator.

On the computer plots is indicated the near optimum demodulator phase shift relative to the chopper blade, for each combination of detector and amplifier characteristics plotted. The blade phase relative to the scene has been assumed optimized at 270° as shown in Figure 5.2, for symmetry and maximum signal to noise.

6.0 Integration

The integrator is of the operational R-C sample and hold type as shown in Figure 6.1, with the transfer function:

$$e_o = \frac{1}{RC} \int_{t_1}^{t_2} e_i(t)dt$$

Following the 40 Hz synchronous demodulator, the combination has a noise vs frequency characteristic as pictured in Figure 6.2.

The circuit consists of simple FET switches to ground the input at the end of the integration interval and during the "hold" time, and to cycle the capacitor to zero for a new sample. The actual integrator waveform is given in Figure 4.2.

Signal smoothing and high frequency noise rejection was attempted between the demodulator and the integrator by injecting a low-pass filter. No reasonable valued filter time constant would allow the accuracies desired of the system, and the filter was omitted.

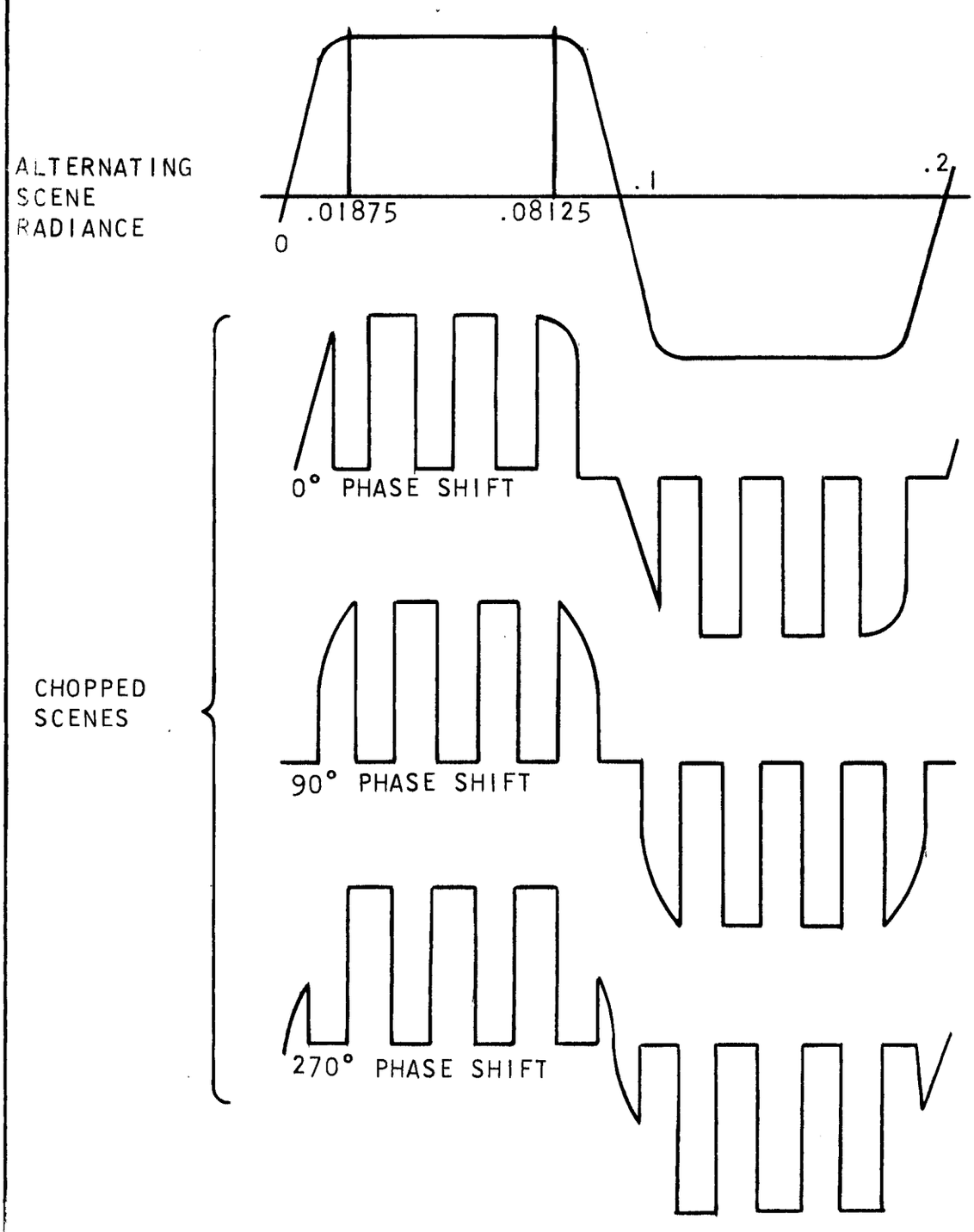

OPTIMISING
CHOPPER TO
SCENE PHASE

13961-355

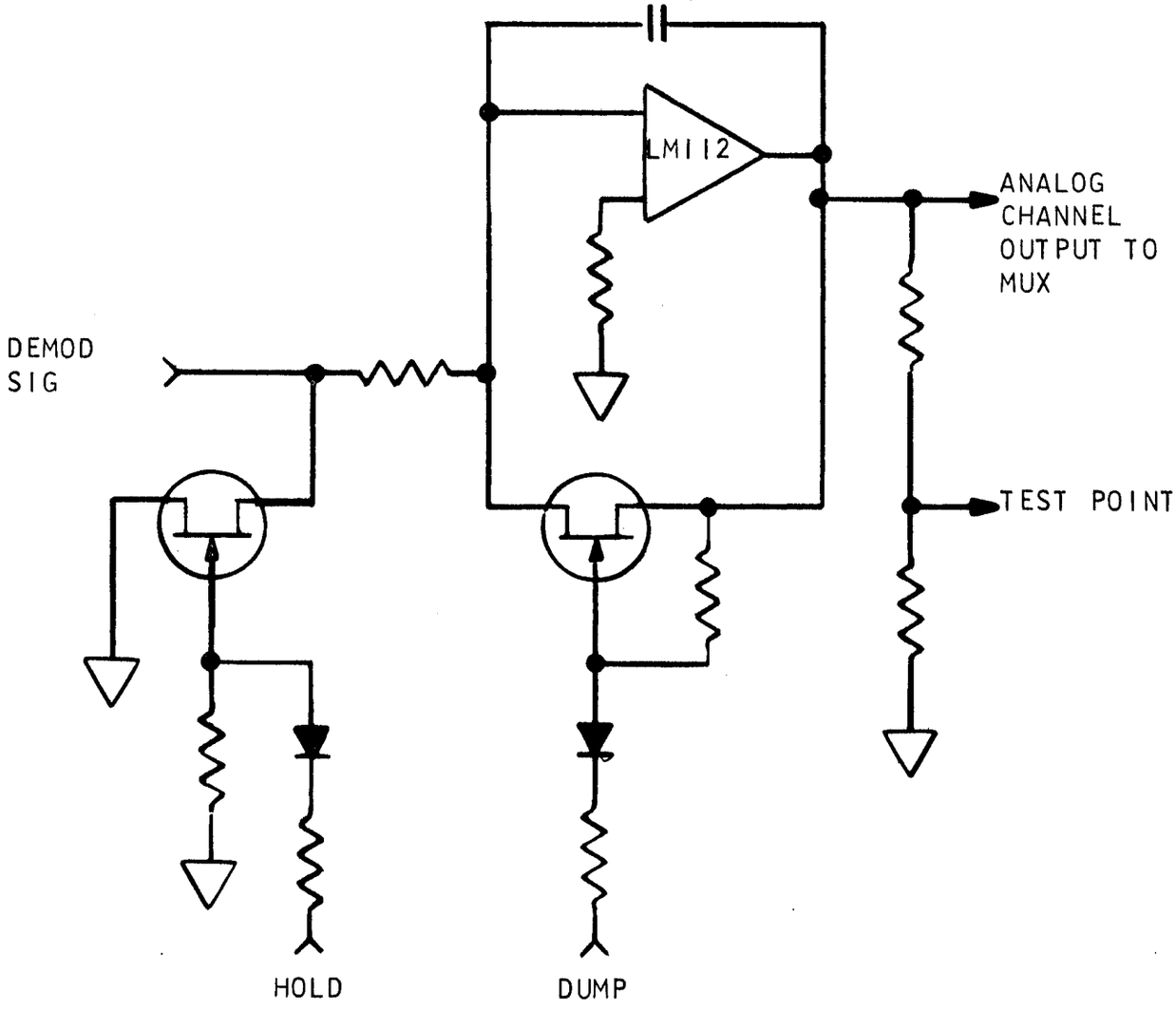

FIGURE 6.1
INTEGRATOR

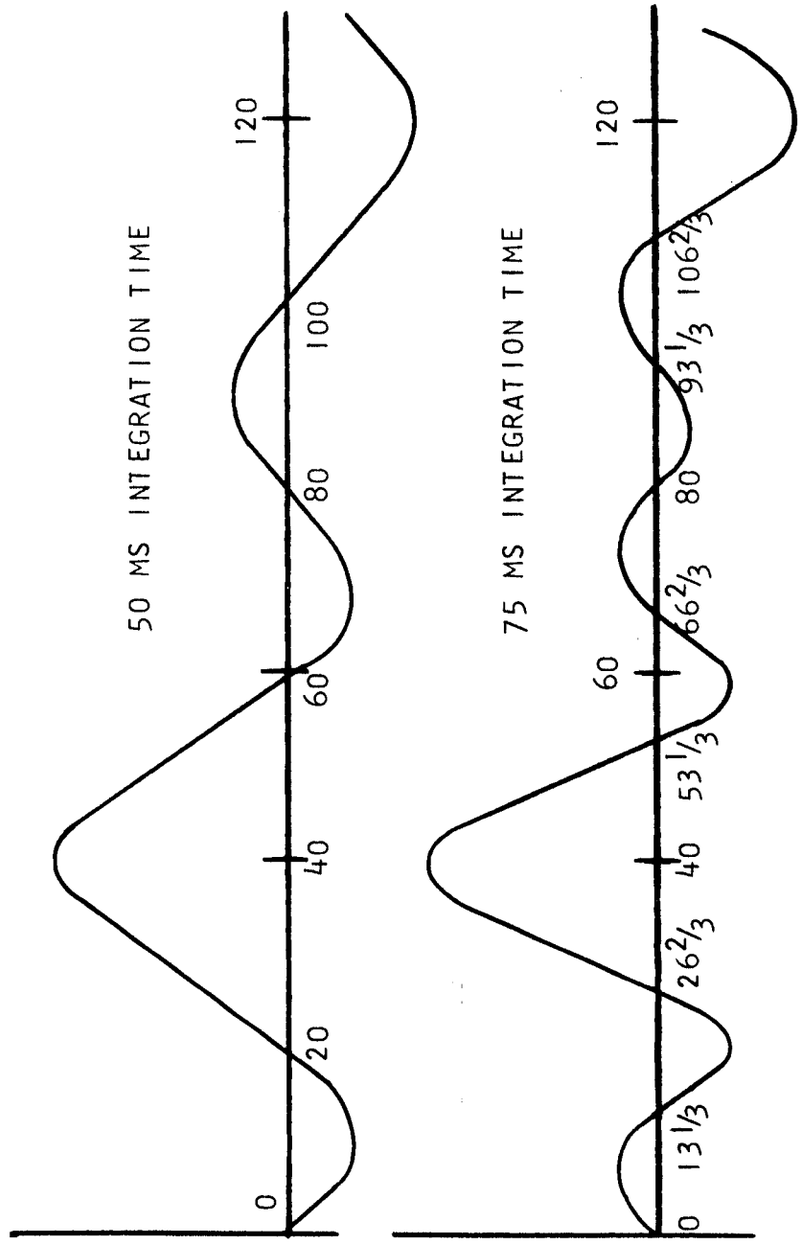

FIGURE 6.2
DEMODULATOR/
INTEGRATOR
NOISE BANDWIDTH

13961-852

7.0 System Worst Case Analysis

The system has been thoroughly analyzed for ITPR, and in ERB Worst Case Analysis reports, and the following specifications result:

1. The amplifier is unconditionally stable.

2. The closed loop gain stability of the amplifier is within $\pm 0.025\%$.

3. The amplifier has provisions for sufficient gain adjustment for the range of proposed detectors.

4. The amplifier output impedance is less than 100 ohms, short circuit protected.

5. A maximum of two coupling time constants provided in the amplifier yield scene-to-scene crosstalk less than 0.2% of full scale.

6. Amplifier output is 10v peak to peak.

7. Phase shift variations over the range of 0° to $40^{\circ}C$ for two years plus 2000 hours is less than $\pm 0.2\%$.

8. The integrator output impedance is less than one ohm, short circuit protected.

9. The maximum noise on the integrated signal is 10 mv rms from -5° to $+55^{\circ}C$ and from 0 to ± 10 v output range, in the average Van Allen radiation prediction.

10. The integrator output offset voltage drift is 36.4 $\mu v/^{\circ}C$ typical and 264 $\mu v/^{\circ}C$ maximum. The maximum error caused by this voltage offset drift in the output voltage is 0.1188%.

11. The integration accuracy and repeatability is better than 0.096% of full-scale, worst temperature variation and worst case temperature coefficient.

12. The system passband is capable of providing optimization for the range of proposed detectors.