QC
879.5
.U4
no.3

U.S. National Environmental Satellite Center,
Washington, D.C.
Technical memorandum NESCTM-3. Computer processing of satellite cloud pictures, by C.L. Bristor.

U.S. NATIONAL ENVIRONMENTAL SATELLITE CENTER
Washington, D.C.

April 1968

Computer Processing of Satellite Cloud Pictures

ATMOSPHERIC SCIENCES
LIBRARY
MAY 9 1968
E. S. S. A.
U. S. Dept. of Commerce

QC
879.5
.U4
no.3

Technical Memorandum NESCTM-3

U.S. DEPARTMENT OF COMMERCE / ENVIRONMENTAL SCIENCE SERVICES ADMINISTRATION

U. S. DEPARTMENT OF COMMERCE
ENVIRONMENTAL SCIENCE SERVICES ADMINISTRATION
NATIONAL ENVIRONMENTAL SATELLITE CENTER

National Environmental Satellite Center Technical Memorandum NESCTM-3

COMPUTER PROCESSING OF SATELLITE CLOUD PICTURES

C. L. BRISTOR

QC
879.5
.U4
no 3

Washington, D. C.
April 1968

144 814

National Oceanic and Atmospheric Administration
TIROS Satellites and Satellite Meteorology

ERRATA NOTICE

One or more conditions of the original document may affect the quality of the image, such as:

Discolored pages
Faded or light ink
Binding intrudes into the text

This has been a co-operative project between the NOAA Central Library and the Climate Database Modernization Program, National Climate Data Center (NCDC). To view the original document contact the NOAA Central Library in Silver Spring, MD at (301) 713-2607 x124 or Library.Reference@noaa.gov.

HOV Services
Imaging Contractor
12200 Kiln Court
Beltsville, MD 20704-1387
January 26, 2009

TABLE OF CONTENTS

		Page
ABSTRACT		1
I.	INTRODUCTION	1
II.	COMMAND AND DATA ACQUISITION	2
III.	INPUT DATA PROCESSING	2
IV.	EARTH LOCATING	3
V.	PICTURE GRIDDING	4
VI.	PICTURE MAPPING	5
VII.	COMPUTER PRODUCTS	6
VIII.	FINAL REMARKS	7
REFERENCES		8

National Environmental Satellite Technical Memoranda

The National Environmental Satellite Center is responsible for the establishment and operation of the National Operational Meteorological Satellite System and the environmental satellite systems of the Environmental Science Services Administration. The three principal offices of NESC are Operations, System Engineering, and Research. The NESC Technical Memorandum series is used by these offices to facilitate early distribution of general information of interest to other ESSA organizations. Publication of such information in this series will not preclude later publication in a modified form in scientific journals, etc. References to a paper in this series should identify it as an NESC Technical Memorandum.

The NESC Technical Memoranda are available through the Clearinghouse for Federal Scientific and Technical Information, U. S. Department of Commerce, Sills Building, Port Royal Road, Springfield, Virginia, 22151. Cost per item is uniform: $3.00 for hard copy, $.65 for microfiche.

NECTM

1. Publications by Staff Members, National Environmental Satellite Center and Final Reports on Contracts and Grants Sponsored by the National Environmental Satellite Center, 1958 - 1966, March 1967.

2. Publications by Staff Members, National Environmental Satellite Center and Final Reports on Contracts and Grants Sponsored by the National Environmental Satellite Center, 1967, January 1968.

COMPUTER PROCESSING OF SATELLITE CLOUD PICTURES

C. L. Bristor

ABSTRACT

The computer processing of satellite cloud pictures on a daily operational basis is described. A generalized flow of the hardware/software process is given with the aid of several logic diagrams.

I. INTRODUCTION

Preliminary efforts toward the central processing of meteorological satellite data began in late 1958 near the beginning of the space age. Early efforts (in parallel with similar efforts at the data acquisition stations) were concerned mainly with the production of latitude/longitude earth locator grids which were produced to fit the perspective of the individual vidicon camera images. As multi-channel infrared radiometers were included in the early TIROS series, programs were produced for the archiving (on computer magnetic tape) of properly earth located sensor data. With the advent of the Nimbus satellite series, major computer resources were made available for the operational processing of pictures from its advanced vidicon camera system (AVCS) and for the processing of other scanning radiometer data (1, 2, 3, 4). Unfortunately this facility was never fully operational during the brief lifespan of Nimbus I. The subsequent shift to the TIROS Operational Satellite (TOS) System resulted in a reconfiguration of specialized electronic equipment in order to process data from the new (wheel configuration) spacecraft. A plan describing the projected operation (5) was activated with the launch of ESSA 1- the first spacecraft in the new TOS series. By October of 1966 the global mapping of video data had become a daily routine (6). Since that time, basic mapped video products have improved, and, from this source, a substantial beginning has been made toward a hierarchy of derived products.

This memorandum is intended as a brief description of the facility in terms of the logical steps in the data processing procedure as it is constituted in April 1968. Certain detail and technical specification has been avoided for the sake of brevity. Since the processing of picture data is the primary goal, the entire operation has been described with this as the central theme. Certain logic charts have been included in support of the discussion. Sample products have not been included since these are becomming commonplace through facsimile distributions and as illustrations in a growing list of published papers in the meteorological literature.

II. COMMAND AND DATA ACQUISITION

Responsibility for command and maintenance of the satellites in proper mission mode rests with the Satellite Operations Branch at Suitland. Instructions are transmitted to the ESSA Command and Data Acquisition (CDA) stations at Wallops Island, Virginia, and near Fairbanks, Alaska. Since the satellite has been injected into a sun synchronous orbit (same local sun time at each equator crossing), the planning of picture taking under proper illumination is a straightforward process. Once the positioning of the 12-picture sequence for an orbital pass has been decided upon, commands are made up to activate the satellite. The satellite's programmer logic starts the picture taking sequence by counting down a specified number of spin counts. As the camera shutter is activated, the vidicon scan response is stored on the satellite's video tape recorder.

Once the pictures are stored (in intermittent 8-second bursts), a readout command delivers a 12-frame sequence to the CDA station's analog tape recorder in about 1½ minutes. Pictures recorded at the CDA stations are next relayed to Suitland via microwave (48Kc Telpack B) communications facilities. Since the microwave facility is substantially narrower in bandwidth than the direct satellite-to-ground CDA links, the relayed video is transmitted on an eight-to-one slow down basis.

III. INPUT DATA PROCESSING

Within NESC there exists a substantial hardware complex for the processing of video data. Many man-years of software investment also support this processing. Apart from the raw input signals a considerable number of collateral input items are required. The serially received (FM/FM) video signal arrives at the data processing facility, is properly discriminated, digitized and made available to an on-line computer (fig. 1). This raw digital video signal is presented as a sequence of 6-bit brightness bytes along with frame start and line start interrupt signals so that the 800 samples along each of the 800 scan lines can be properly identified within the computer.

During the time in which the picture is being stored on the satellite's tape recorder, a 20-bit relative (half second) time count is being recorded on another telemetry channel. With knowledge of the real time at which this counter was reset, the picture shutter time may be deduced. This is made available to the computer through a time code formatting device.

The raw video ingestion program receives the above two inputs and creates a properly formatted raw digital video tape for further processing. Output from the time code register cannot be processed until the interframe gap. Therefore shutter times are printed on the computer's typewriter for verification by the operator (see below). Minimum documentation - including

orbital pass number inserted by operator action - is contained on the resulting output tape.

Picture sequences must be planned and the satellite commanded on the basis of proper illumination and other operational constraints. Since satellite command logic requires relating picture taking to spin revolutions, the spin rate is evaluated very precisely. Calculation is then performed so that spin count passed to the satellite at command time, when counted down, will provide pictures at the proper time. With auxiliary information concerning the reset of the 20-bit time counter, the program which computes spin revolutions may also convert the projected shutter times into equivalent 20-bit time code. By this means, the operator is able to verify that pictures obtained are, indeed taken at the planned times.

IV. EARTH LOCATION

Proper earth positioning of each picture requires substantial added information (figure 2). Although the camera is mounted in the satellite at a precisely known angular position, the exact location of each picture element on the image plane requires knowledge of distortions produced within the camera system. Prelaunch pictures of test targets provide such information. After careful bore sighting, pictures of large geometric patterns provide unique relationships between image (X,Y) positions and corresponding orthogonal-angle components in object space. This information is prepared in table form and made available to the computer. These distortions arise from the optics and the electronic characteristics of the camera system. Shifts in distortion characteristics can be checked after launch by means of fiducial marks which are permanent features of the vidicon image face. If raster shifts are permanent and stable, the coordinate shifts can be incorporated as corrections to the distortion tables.

With camera mount firmly related to the satellite spin axis, the next step involves determination of the inflight spin axis orientiation. Another program utilizes the output of horizon scanning radiometers for this purpose. These infrared sensors scan conically around the spin axis in opposing directions. Their (differentiated) output is sampled digitally and the program determines the earth viewing percent of the spin period for each sensor. Repeated measures of this type provide information regarding both the roll and yaw components of the satellite's spin axis. Such information can be time normalized and expressed in a variety of forms including right ascension and declination.

The remaining attitude component (pitch) is under control of another horizon detector which triggers the camera at the proper instant in the spin period. The mounting angle between camera and shutter trigger sensor will obviously yield zero pitch at only one satellite altitude. The actual pitch therefore must be computed using the satellite altitude at the time of each picture.

The NASA - determined satellite orbit is calculated using tracking data collected from a worldwide station network. An epoch time is selected within the time span of the tracking data. The derived mean orbital elements are therefore furnished after the fact. Since the video processing is a real time operation, orbital information related to the pictures is produced on a predictive basis. A modified version of a NASA (Nimbus Project) program is used for this purpose. With proper orbital elements, this package produces subsatellite point latitude and longitude together with satellite altitude, all as a function of a specified shutter time.

Despite the fact that vidicons have not been constructed with strong quantitative design specifications, a considerable effort has been expended toward quantitative use of the picture data. Digital sampling of prelaunch pictures, taken under a variety of controlled conditions, reveals a strong vignette effect toward the edges of the frame. Correction for such attenuation permits comparison of brightness response throughout an image and with overlapping portions of adjacent images. In the case of mapped video, there is also interest in comparing brightness responses over large geographical regions where pictures are taken under varying sun angles. Programs which apply such corrections do so in an approximate sense since only the sun/satellite position trigonometrics are considered. Additional diagnostic software utilizes saved response samples from each picture in order to check for in-flight response changes.

The presentation of earth located imagery is considerably enhanced by the implanting of coastlines and other important land form features. The program which provides such information utilizes large tables which contain latitude/longitude points along all such desired line features. These tables have been prepared from detailed navigation charts - the selected points having been estimated to tenths of degrees by eye and entered on punched cards.

V. PICTURE GRIDDING

Early computer support was primarily directed toward the automatic implanting of earth location information within the unique perspective of each picture. A variety of programs have evolved along with a flexible hardware capability.

The synchronous gridding technique is an outgrowth of early Nimbus gridding experiments. It involves a computer on line as the picture data is being received and recorded on analog video tape. Gridding signals, precalculated on a line-by-line basis,are available to this computer on digital tape. At the beginning of each video raster line, the computer counts distance (time) along the line to the appropriate position for each grid mark. At the appropriate moment, a grid mixing circuit is triggered to replace the analog video recording with a fixed grey level analog signal.

Thresholding logic tests the ambient signal and feeds either a black or a white burst signal. In this way, dark lines are imbedded in bright cloud areas and white lines appear over darker cloud-free regions.

A more common method mixes analog video information with precalculated grids without the synchronizing problems (flutter and wow) of the above method. This method utilizes special display equipment features which permit alternation between analog and digital signal inputs. Lines and labels are thereby inserted as double exposure inputs from the digital tape during picture interframe gaps. Proper juxtaposition in this case depends upon the stability of the electronic raster positioning in the CRT display device, since the digital signal raster involves circuitry separate from that used in the analog raster. Some restriction in picture gray-scale range is also necessary since all grid lines must be white and visible in all portions of the image.

A preferred method utilizes digitized video data and performs the grid melding within the computer. This technique retains the reverse polarity gridding capability of the first method without synchronizing problems since flutter and wow compensations are performed during the video digitizing process. Other flexibilities are also provided such as the ability to perform a variety of non-linear gray-scale enhancements as the blended digital image tape is prepared for display. This method will become the prime operation as redundant (backup) hardware becomes available for a guaranteed production.

VI. PICTURE MAPPING

Despite the convenience of grids, automatically combined with pictures, the analyst must still cope with problems of perspective and overlap between frames. Since October, 1966, NESC has provided mapped imagery on a daily global basis for a growing variety of uses.

The same earth-locator information (figure 2) is used to determine the latitude/longitude of each digital brightness sample. If these locations are transformed through map projection geometry, a digitized picture can be replotted on standard Mercator and polar stereographic maps for handy comparison with other environmental data. A fine mesh (4096x4096) map array area is reserved on computer disks for each polar hemisphere, and a separate space is reserved for a overlapping Mercator equatorial map array (40N to 32S).

A substantial amount of large computer time is utilized each day in producing these mapped video arrays. Raw samples are brightness normalized for non linearities in vidicon response, are adjusted for inequalities in solar illumination, and then mapped into the polar and Mercator arrays. Overlap imagery from frame-to-frame and from pass-to-pass is reduced by cropping unwanted redundancy. Global coverage is maintained in the polar

map disk arrays. As new information is acquired, a "forward erase" logic insures that the most timely 24-hour coverage is maintained. A slight forward gap is created to demark the shifting 24-hour discontinuity line.

VII. COMPUTER PRODUCTS

Once images have been mapped, the disk file arrays are available for a variety of products. Sixteen 35-mm film chips are produced daily in order to provide an archive of the polar and Mercator mapped global imagery. These are available through the National Weather Records Center (NWRC), Asheville, N. C. as explained in the film archive catalog (7). Photo prints in several map-scale sizes are also produced from these films for local (and limited external) distribution. Many image sectors are also distributed on an operational basis through several facsimile networks and by rebroadcast using the Weather Facsimile (WEFAX) facilities of NASA's first Advanced Technology Satellite (ATS1).

An interim archive of this "full resolution" mapped data is also obtained by copying the disk arrays onto magnetic tape. Three standard 2400-ft. tape reels are required for each daily load.

Experimental programs are now beginning to explore the automatic extraction of information related to upper level wind fields and to snow (hydrology) survey work.

This unwieldy volume of information is compressed in a final archive by storing a set of descriptors which summarize each 8x8 cluster of the full resolution arrays. These mesoscale tapes contain 512x512 hemispheric descriptor arrays amounting to three days of global coverage per reel. Such tapes are available from January 1967 and are also being placed in the NWRC archive.

Test products are also being produced from the meso summary data. One point-to-point message format tape is available for relay and further treatment by computer. Another "macro scale" tape is now being created through additional spatial averaging.

Hemispheric 5-day mean mesoscale brightness charts have been produced since November, 1967, as a possible tool in medium range forecasting. Similar 30-day mean brightness charts are projected as additional tools for longer range weather forecasting.

Other multi-day composites are in a testing phase. An accumulation of minimum response over a considerable period would tend to eliminate moving cloud regimes and thereby reveal the underlying image field. Such charts are expected to provide inputs for sea ice and snow field survey work. A similar maximum response composite may summarize information on

storm tracks since small, rapidly moving transitory cyclones would be retained. The (smeared) bright image areas would also relate to broadscale rainfall patterns. These and other planned derived products serve to broaden the utility of the mapped image arrays and so distribute the initial mapping cost.

A preliminary catalog of all products of the Data Processing and Analysis Division is in preparation (8).

VIII. FINAL REMARKS

A few cautionary remarks are in order.

First, the accuracy of the earth location of imagery is a function of the input information. Uncertainties within the inputs of figure 2 may combine to create appreciable location errors. Picture time errors of six seconds are possible since shutter triggering can occur only once during each spin revolution (10 rpm) of the satellite. Slight errors in predicting orbital position as a function of time may also contribute. Since the satellite's orbital period is somewhat less than two hours, a one second time error can amount to more than three miles of positioning error in the foreground picture sector (near the subsatellite point). Attitude errors of only tenths of degrees of nadir angle may similarly introduce errors of several miles. Although positioning accuracy is usually good to within 5-10 miles, errors up to about 30 miles may occur near the subsatellite point and perhaps double that amount in the foreshortened regions near the horizon.

There are also problems with brightness calibration. The above mentioned vignette correction is an empirically determined approximation. The overall scene brightness, position of the frame in the picture taking sequence, and other factors are known to contribute variations. The vidicon cameras also are known to change in overall response as a function of temperature, and with age.

Non-isotropic scattering and other complexities also render the illumination correction only an approximation. Vidicon fiducial marks also contaminate the image by blocking off more than one percent of the earth view. This seemingly small contamination tends to accumulate, with multi day summations because of preferred picture positions resulting from repetition in the programmed picture times.

Even though these problems tend to reduce uses to a quasi-quantitative level, there appears to be ample opportunity for the development of additional experimental products. Experiments with Nimbus and ATS imaging scanners indicate that much of this weakness in quantitative interpretation may be overcome with the advent (in 1969) of the Improved Tiros Operational Satellites (ITOS). For this system, multi channel imaging scanners are being developed as possible replacements for the vidicon system.

REFERENCES

1. Bristor, C. L. and L. I. Miller, "Processing Satellite Weather Data - A Status Report - Parts I and II", Proceedings of the 1962 Fall Joint Computer Conference, American Federation of Information Processing Societies, Philadelphia, Pa., Published by Spartan Books, Washington, D. C., December 1962.

2. Bristor, C. L. and W. M. Callicott, "Meteorological Products From Digitized Satellite Vidicon Cloud Pictures", Meteorological Satellite Laboratory Report No. 26, U. S. Weather Bureau, March 1964.

3. Bristor, C. L., "A Summary of Experiences in Computer Processing of Nimbus I Data", Meteorological Satellite Laboratory Report No. 27, U. S. Weather Bureau, June 1966.

4. Martin, G. E. and L. Rubin, "Automatic Processing of Nimbus Infrared Radiometer Data", Meteorological Satellite Laboratory Report No. 28, U. S. Weather Bureau, July 1964.

5. Zavos, B., "TOS Data Handling Plan", National Environmental Satellite Center, ESSA, February 1966.

6. Bristor, C. L., W. M. Callicott, and R. E. Bradford, "Operational Processing of Satellite Cloud Pictures by Computer", Monthly Weather Review, Vol 94, No. 8, 1966.

7. Anon., "Catalog of Meteorological Satellite Data - ESSA3 Cloud Photography, Part 2", Environmental Data Service, ESSA, January 1, - March 31, 1967.

8. Anon., "Data Processing and Analysis Division Data Products Catalogue", National Environmental Satellite Center, (In Preparation).

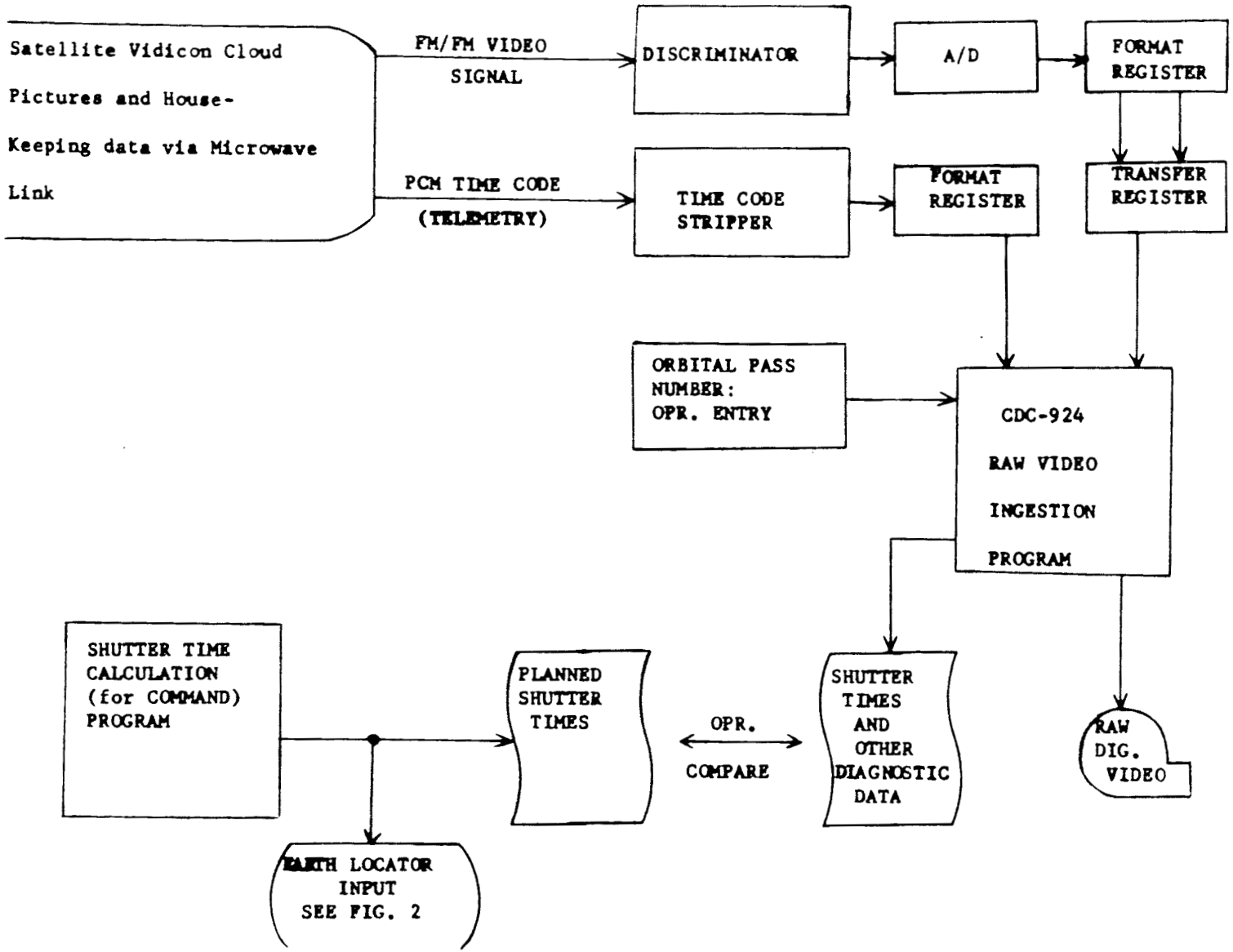

Figure 1 - Input Data Processing

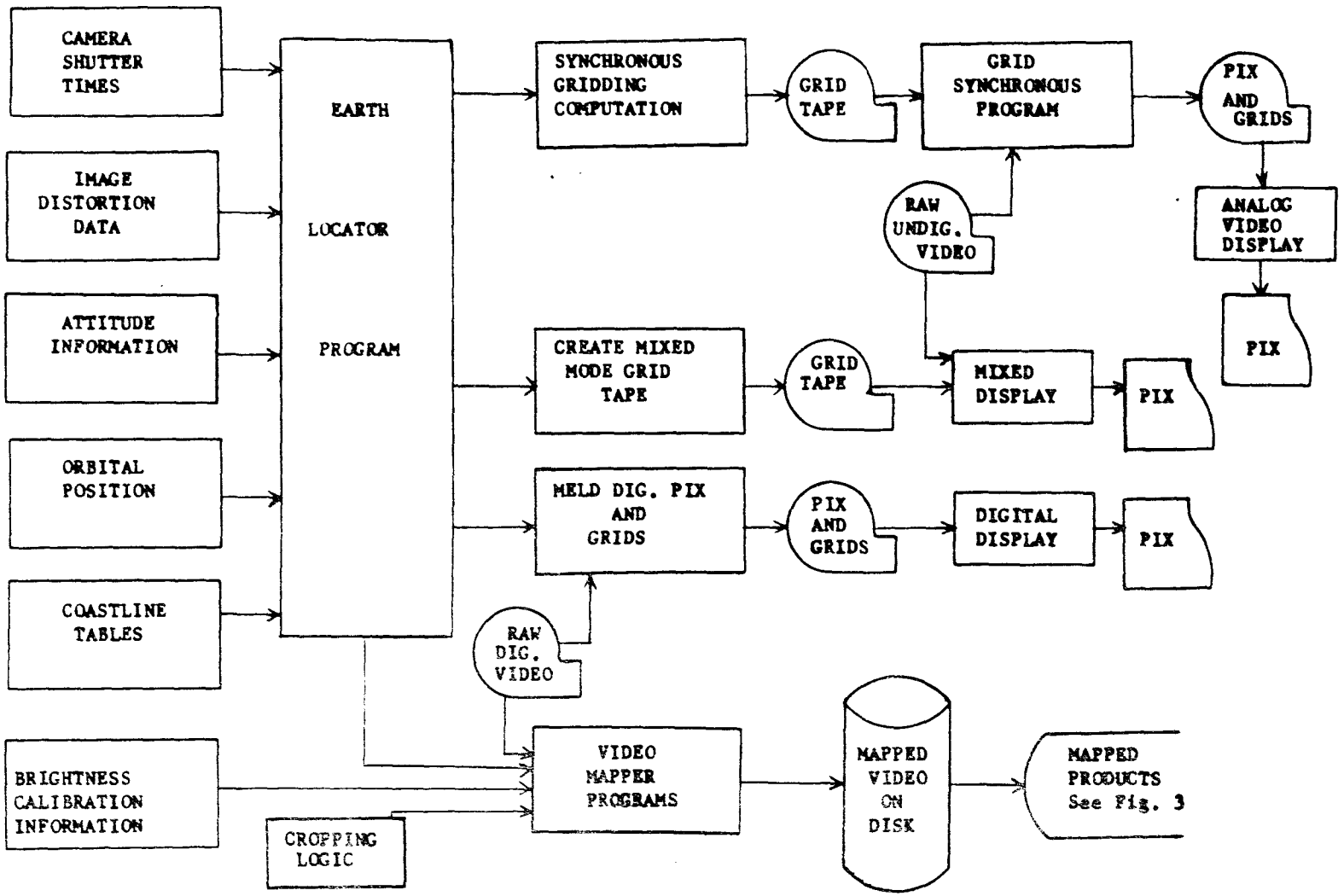

Figure 2 - Earth Location Processing

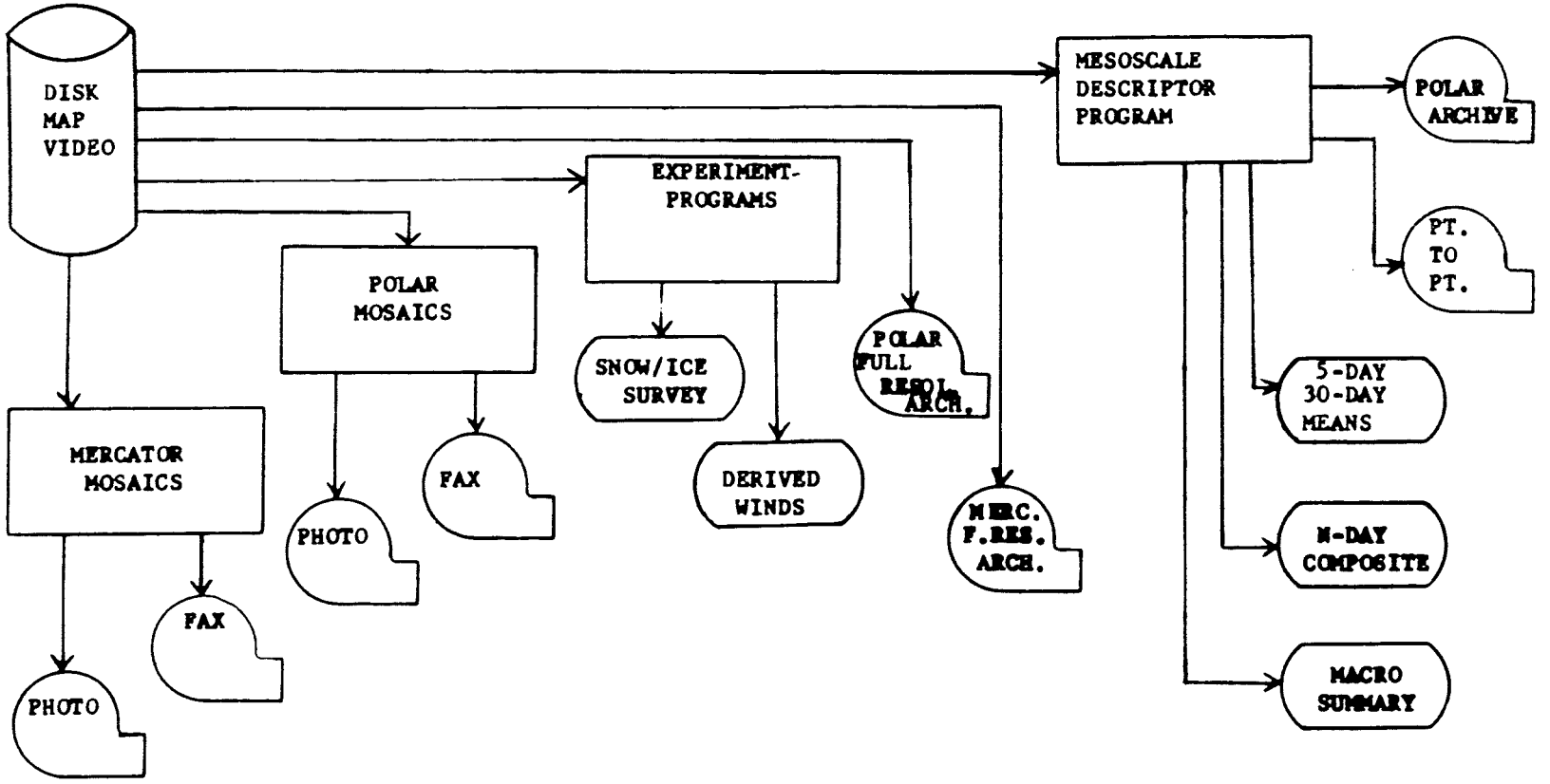

Figure 3 - Picture Mapping