# REPORT OF THE SUPERINTENDENT

OF THE

# U. S. COAST AND GEODETIC SURVEY

QC
296
.U5
1889

SHOWING

## THE PROGRESS OF THE WORK

DURING THE

FISCAL YEAR ENDING WITH

JUNE, 1889.

WASHINGTON:
GOVERNMENT PRINTING OFFICE.
1890.

# National Oceanic and Atmospheric Administration

## Annual Report of the Superintendent of the Coast Survey

### ERRATA NOTICE

One or more conditions of the original document may affect the quality of the image, such as:

Discolored pages
Faded or light ink
Binding intrudes into the text

This has been a co-operative project between the NOAA Central Library, the Office of Coast Survey and the National Geodetic Survey. To view the original document, please contact the NOAA Central Library in Silver Spring, MD at (301) 713-2607 x124 or www.reference@nodc.noaa.gov.

**Please Note:**
This project currently includes the imaging of the full text of each volume up to the "List of Sketches" (maps) at the end. Future online links, by the National Ocean Service, located on the Historical Map and Chart Project webpage (http://historicals.ncd.noaa.gov/historicals/histmap.asp) will includes these images.

LASON
Imaging Contractor
12200 Kiln Court
Beltsville, MD 20704-1387
January 10, 2003

Blank page retained for pagination

# LETTER

FROM

# THE ACTING SECRETARY OF THE TREASURY,

TRANSMITTING

*The report of the Superintendent of the Coast and Geodetic Survey for the fiscal year ended June* 30, 1889

---

DECEMBER 17, 1889.—Laid on the table and ordered to be printed.

---

TREASURY DEPARTMENT, *December* 16, 1889.

SIR: In compliance with the requirements of section 4690, Revised Statutes, I have the honor to transmit herewith for the information of Congress a report addressed to this Department by T. C. Mendenhall, Superintendent of the Coast and Geodetic Survey, showing the progress made in that work during the fiscal year ended June 30, 1889, and accompanied by maps illustrating the general advance in the operations of the Survey up to that date.

Respectfully, yours,

GEO. S. BATCHELLER,
*Acting Secretary.*

The SPEAKER OF THE HOUSE OF REPRESENTATIVES.

Blank page retained for pagination

# ABSTRACT OF CONTENTS OF REPORT.

Report of progress and state of the work of the Coast and Geodetic Survey during the fiscal year ended June 30, 1889, submitted, p. 1.

PART I.—*Résumé* of work prosecuted, p. 2. General statement of progress in field work on the Atlantic coast, pp. 2, 3; on the Pacific coast, pp. 3, 4; in the interior States, p. 4; special operations, p. 4. Office work, pp. 4, 5. Discoveries and developments, pp. 5, 6. Bulletins, p. 6. Special scientific work referred to under the following named heads: On the relation existing between the metric standards of length of the U. S. Coast and Geodetic Survey and the U. S. Lake Survey, pp. 6, 7; The need of a remeasurement of the Peruvian Arc, p. 7; Results of spirit-leveling between tide-water at Annapolis, Md., and the Capitol bench-mark at Washington, D. C., p. 7; Measurement of the Los Angeles primary base-line, p. 8; Telegraphic determination of the longitude of a station on Mount Hamilton, California, near the Lick Observatory, p. 8; Distribution of the magnetic declination in the United States for the epoch of 1890, pp. 8, 9; Encroachment of the sea upon the coast of Cape Cod, Massachusetts, as shown by comparative surveys, p. 9; Cross-sections of the shore of Cape Cod, between Chatham and the Highland light-house, p. 9; Resurvey of the new inlet into Cotamy Bay, Martha's Vineyard, pp. 9, 10. Explanation of estimates and estimates in detail, pp. 10-17.

PART II.—*Field and office work*, abstracts of reports of progress in, pp. 80-100.

Preliminary remarks, p. 18.

SECTION I.—Maine, New Hampshire, Vermont, Massachusetts, and Rhode Island, including coast and sea-ports, bays and rivers, pp. 19-34. Continuation of the triangulation of the St. Croix River, and of the lakes near its head towards the Northeastern Boundary, pp. 19, 20. Completion of the topographical survey of the west bank of the St. Croix River, between Pleasant Point and Shortlands station, p. 20. Topographical survey of the north branch of Cobscook Bay, Maine, pp. 20, 21. Completion of the hydrography of Cobscook Bay, Maine, p. 21. Completion of the topographical survey of Cobscook Bay, pp. 21, 22. Hydrographic examinations on the coast of Maine, in the vicinity of Nash Rock, and between Matinicus Rock and Seguin Island. Also off the coast of Massachusetts from Nantucket Shoals to the eastern limit of George's Bank, pp. 22, 23. Physical hydrography. Continuation of the survey of the coast of Cape Cod Peninsula, from the vicinity of Chatham to the northward, pp. 23-25. Continuation of the determinations of town boundary lines in the State of Massachusetts, pp. 25, 26. Resurvey of the new inlet into Cotamy Bay, Martha's Vineyard, p. 26. Supervision and inspection of topographical resurveys on Martha's Vineyard, No Man's Land, Naushon, in the vicinity of Wood's Holl, and on the southeasterly part of Long Island, pp. 26-28. Additions of topographical details to the original surveys of Nantucket and Martha's Vineyard Islands, pp. 28, 29. Hydrographic resurveys in Nantucket Sound, p. 29. Hydrographic resurveys in Nantucket and Martha's Vineyard Sounds, pp. 29, 30. Hydrographic resurvey of the approaches to Martha's Vineyard and Nantucket, and resurvey of Muskeget Channel, pp. 30-32. Hydrographic resurveys and examination in Nantucket Sound, p. 32. Topographic resurvey of parts of the north and south shores of Martha's Vineyard; also of the shore of No Man's Land, pp. 32, 33. Topographical resurvey of shore-line and adjacent details in Wood's Holl and on the islands in its immediate vicinity, pp. 33, 34. Topographical resurvey of the Elizabeth Islands, p. 34. Determination of the geographical positions of light-houses in Narragansett Bay and approaches, etc., p. 34.

SECTION II.—Connecticut, New York, New Jersey, Pennsylvania, and Delaware, including coast, bays, and rivers, pp. 34-39. Triangulation on the south coast of Long Island completed from Great South Bay to Napeague Bay, pp. 34, 35. Completion of the shore-line resurveys of Three Mile Harbor, Moriches Bay, and the outer beach, Long Island, p. 35. Hydrographic examination of the entrance into Jamaica Bay, south side of Long Island, pp. 35, 36. Observations of currents in New York Lower Bay, p. 36. Establishment of meridian lines and standards of length at Binghamton, N. Y., and at Montrose, Pa., pp. 36, 37. Continuation of tidal record by means of automatic tide-gauge at Sandy Hook, N. J., p. 37. Continuation of the triangulation in northeastern Pennsylvania, required to complete the Pamplico-Chesapeake-Lake Ontario arc of the meridian, pp. 37, 38. Correc-

tions in and additions to the topographic and hydrographic surveys of the Delaware River made necessary by changes since former surveys, p. 38. Topographic and hydrographic resurvey of the Schuylkill River, from Fairmount Dam to the Delaware River, pp. 38, 39. Physical hydrography. Continuation of the observation of ice formation and movement in Delaware River and Bay, p. 39.

SECTION III.—Maryland, District of Columbia, Virginia and West Virginia, including bays, sea-ports, and rivers, pp. 40–46. Topographical resurvey of Annapolis Harbor and Roads, p. 40. Connection by geodetic leveling of the tidal bench-marks at Annapolis, Md., pp. 40, 41. Hydrographic resurvey of Annapolis Harbor and approaches, p. 41. Continuation of the detailed topographical survey of the District of Columbia, pp. 41–44. Establishment of permanent bench-marks for the topographical survey of the District of Columbia, pp. 44, 45. Location of wharves in the Potomac River for additions to the charts, p. 45. Hydrographic resurveys and examinations in the vicinity of Cape Charles, Virginia, pp. 45, 46. Physical hydrography. Observations of ocean currents off the capes of Virginia, and between Nantucket and Cape Hatteras, p. 46.

SECTION IV.—North Carolina, including coasts, sounds, sea-ports, and rivers, pp. 46, 47. Supplementary work incidental to the special hydrography for the State of North Carolina, pp. 46, 47.

SECTION V.—South Carolina and Georgia, including coast, sea-water channels, sounds, harbors, and rivers, pp. 47, 48. Recovery and re-establishment of stations of the triangulations of 1849, 1857, and 1865 for the extension of a tertiary triangulation, topography, and hydrography up the Cooper, Ashley, and Wando Rivers, South Carolina, p. 47. Triangulation in the vicinity of Charleston, S. C., and up the Cooper, Ashley, and Wando Rivers, p. 48.

SECTION VI.—Peninsula of Florida, from St. Mary's River on the east coast to and including Anclote Anchorage on the west coast, with the coast approaches, reefs, keys, sea-ports, and rivers, pp. 48–51. Physical hydrography; Gulf Stream explorations; observations of currents in 1888 and 1889, pp. 48, 49. Hydrographic surveys in the Bay of Florida, in the approaches to the Florida Reefs, and on the Northwest Channel Bar, Key West, pp. 49-51. Topographical survey of the west coast of Florida between Cape Sable and Pavilion Key, p. 51.

SECTION VII.—Peninsula of Florida, west coast, from Anclote Anchorage to Perdido Bay, including coast approaches, bays, and rivers, pp. 52–55. Off-shore hydrographic survey between Cedar Keys and Light-House Point, west coast of Florida, pp. 52, 53. Triangulation of Perdido Bay and its connection with the triangulation of Pensacola Bay, pp. 53, 54. Triangulation, topography, and hydrography in Pensacola Bay and branches. Triangulation between Pensacola and Perdido Bays, pp. 54, 55.

SECTION VIII.—Alabama, Mississippi, Louisiana, and Arkansas, including Gulf coasts, ports, and rivers, pp. 55–59. Occupation of stations for the extension of the primary triangulation in Alabama towards the Gulf of Mexico, p. 55. Extension of the line of levels of precision from Little Rock, Ark., towards the western boundary of the State, p. 56. Occupation of a station in Louisiana for magnetic observations, pp. 56, 57. Triangulation of the Atchafalaya River, Louisiana, p. 57. Measurement of base and verification of triangulation on the coast of Louisiana, pp. 57–59. Hydrographic surveys in Atchafalaya Bay and vicinity, coast of Louisiana, p. 59.

SECTION IX.—Texas, including Gulf coast, ports, and rivers; also, the Indian Territory, pp. 60, 61. Determinations of the magnetic elements at stations in Texas and at a station in the Indian Territory, p. 60. Construction of buildings for a self-registering magnetic station at San Antonio, Tex., pp. 60, 61.

SECTION X.—California, including the coast, bays, harbors, and rivers, pp. 61–71. Hydrographic surveys on the coast of California from San Diego to Oceanside and vicinity, pp. 61, 62. Extension of the topographical survey of the south coast of California from Del Mar to beyond Oceanside, pp. 62, 63. Hydrographic survey on the coast of California from off the eastern end of San Onofre Mountain to Newport Landing, and hydrographic examination for a shoal reported off Point Firmin, pp. 63, 64. Measurement of the Los Angeles primary base, pp. 64, 65. Magnetic record continued and absolute values of the magnetic elements determined monthly at the self-registering magnetic station at Los Angeles, Cal., pp. 65, 66. Tertiary triangulation and topography on the coast of California from Cape San Martin, westward, p. 66. General charge of the land work on the Pacific Coast; establishment of a meridian line and a standard of length in Golden Gate Park, San Francisco; Alaska boundary parties; telegraphic longitude work; magnetic work, San Francisco; Coast Pilot work, etc., pp. 66-68. Exchanges of telegraph signals for longitude between San Francisco and Mount Hamilton and between other stations in California and in Nevada; also determinations of latitude and the magnetic elements, pp. 68, 69. Hydrographic examination of Hospital Cove, Angel Island, San Francisco Bay, pp. 69, 70. Continuation of tidal record at the automatic tidal station at Saucelito, Bay of San Francisco, p. 70. Hydrographic surveys in the vicinity of Crescent City, Cal., pp. 70, 71.

SECTION XI.—Oregon and Washington Territory, including coast, interior ports, and rivers, sounds and bays, pp. 71–78. Topographical reconnaissance of the coast of Oregon between Rogue River and Cape Sebastian completed, and the topographical survey between Coos Bay and the Umpquah River finished, pp. 71, 72. Hydrographic survey from Cape Orford and vicinity to the southward, p. 72. Resurveys and examination of changes in the Columbia River, in the vicinity of Astoria, and between Tongue Point and Tansy Point, pp. 72, 73. Exchanges

of telegraphic signals for longitude between Port Townsend and Seattle, between Seattle and Walla Walla, between Walla Walla and Helena, and between Helena and Spokane Falls, pp. 73, 74. Examination and report of changes in the water front of Seattle and vicinity, p. 74. Hydrographic surveys in the vicinity of Cape Flattery and in Neeah Bay, Washington Territory, pp. 74, 75. Triangulation and topography of Saratoga Passage, Penn's Cove, Oak Harbor, Crescent Harbor, and Skagit Bay, pp. 75, 76. Hydrographic surveys, including Saratoga Passage to Skagit Bay, the northwest corner of Whidbey Island, Rosario Strait, and Bellingham Bay, pp. 76, 77. Triangulation and topography of the Gulf of Georgia, including Lummi, Birch, and Semi-ah-moo Bays, pp. 77, 78.

SECTION XII.—Alaska, including the coast, inlets, sounds, bays, rivers, and the Aleutian Islands, pp. 78–83. Hydrographic surveys in Stephens and in Cleveland Passages, and vicinity, and in Portland Canal and vicinity, southeastern Alaska, pp. 78–82. Tidal record continued at the automatic tidal station at St. Paul, Kadiak Island, Alaska, pp. 82, 83. Collection of data for the Coast Pilot in southeastern Alaska, and establishment of a tidal station at Unalaska, p. 83. Preliminary survey of the frontier line between Alaska and British Columbia, p. 83.

SECTION XIII.—Kentucky and Tennessee, pp. 83, 84. Geodetic leveling from near Cairo, Ill., across western Kentucky and Tennessee, p. 83. Occupation of stations for connecting the triangulation of the State of Tennessee with the primary triangulation in northern Georgia, pp. 83, 84. Occupation of a station in Tennessee for magnetic determinations, p. 84.

SECTION XIV.—Ohio, Indiana, Illinois, Michigan, and Wisconsin, pp. 84–86. Determinations of the magnetic elements at stations in Ohio, Indiana, Illinois, and Wisconsin, p. 84. Reconnaissance and building of signals in connection with the transcontinental triangulation in Ohio and Indiana, pp. 84, 85. Lines of geodetic leveling carried from near Cairo, Ill., towards the Gulf of Mexico, pp. 85, 86. Continuation of geodetic operations in the State of Wisconsin, p. 86.

SECTION XV.—Missouri, Kansas, Iowa, Nebraska, Minnesota, and Dakota, pp. 87–89. Measurement of a base line in connection with geodetic operations in the State of Minnesota, p. 87. Determinations of the magnetic elements at stations in Iowa, Nebraska, and Kansas, p. 88. Occupation of stations for extending the transcontinental triangulation near the thirty-ninth parallel to the westward in Kansas, pp. 88, 89.

SECTION XVI.—Nevada, Utah, Colorado, Arizona, and New Mexico, pp. 90–92. Occupation of stations for the extension to the eastward in Utah of the primary triangulation near the thirty-ninth parallel, pp. 90, 91. Determinations of the magnetic elements at stations in Colorado and New Mexico, pp. 91, 92. Exchanges of telegraphic signals for the determination of the longitude of Verdi, Nevada, p. 92.

SECTION XVII.—Idaho, Wyoming, and Montana, pp. 92, 93. Exchanges of telegraphic signals for the determination of the longitude of Helena, Montana, pp. 92, 93.

SPECIAL OPERATIONS, pp. 93–95.—Survey for the Commission appointed to select a site for a Navy-yard on the Gulf of Mexico and South Atlantic Coasts, p. 93. Survey for the Commission organized to select a site for a Navy-yard on the Pacific Coast north of the forty-second parallel of north latitude, pp. 93, 94. Organization of parties to make a preliminary determination of the boundary line between Alaska and British Columbia, pp. 94, 95. Centennial Exposition of the Ohio Valley and Central States, p. 95.

COAST AND GEODETIC SURVEY OFFICE.—Reference to and abstracts of the annual report of the Assistant in charge of the Office and Topography and the annual reports of the chiefs of divisions in the Office; clerical force; sub-offices at Philadelphia and San Francisco; concluding statement by the Superintendent, pp. 95–100.

PART III.—Appendices to the Report, Nos. 1 to 18, pp. 103–503.

Blank page retained for pagination

# TITLES OF APPENDICES.


| | | Page. |
|---|---|---|
| No. 1. | DISTRIBUTION OF THE PARTIES of the Coast and Geodetic Survey upon the Atlantic, Gulf of Mexico, and Pacific Coasts, and in the interior of the United States during the fiscal year ending June 30, 1889 | 103–109 |
| No. 2. | STATISTICS of field and office work of the Coast and Geodetic Survey for the year ending June 30, 1889 | 111–113 |
| No. 3. | INFORMATION furnished to Departments of the Government, in reply to special requests, and to individuals upon application, during the fiscal year ending June 30, 1889 | 115–119 |
| No. 4. | REPORT OF THE ASSISTANT IN CHARGE of Office and Topography for the year ending June 30, 1889 | 121–159 |
| No. 5. | REPORT OF THE HYDROGRAPHIC INSPECTOR for the year ending June 30, 1889 | 161–177 |
| No. 6. | THE RELATION between the Metric Standards of Length of the United States Coast and Geodetic Survey and the United States Lake Survey | 179–197 |
| No. 7. | THE NEED of a remeasurement of the Peruvian arc | 199–208 |
| No. 8. | TELEGRAPHIC DETERMINATION of the longitude of a station on Mount Hamilton, California, and its trigonometrical connection with the Lick Observatory | 209–212 |
| No. 9. | DESCRIPTION of two new portable transit instruments for longitude work | 213–216 |
| No. 10. | REPORT on the measurement of the Los Angeles base line, Los Angeles and Orange Counties, California | 217–231 |
| No. 11. | THE DISTRIBUTION of the Magnetic Declination in the United States for the epoch 1890 | 233–402 |
| No. 12. | ENCROACHMENT of the sea upon the coast of Cape Cod, Massachusetts, as shown by comparative surveys | 403–407 |
| No. 13. | CROSS-SECTIONS of the shore of Cape Cod, between Chatham and the Highland Light-House | 409–457 |
| No. 14. | RECENT CHANGES in the South Inlet into Edgartown Harbor, Martha's Vineyard | 459–460 |
| No. 15. | RESULTS of spirit-leveling between tide-water at Annapolis, Md., and the Capitol bench-mark at Washington, D. C | 461–466 |
| No. 16. | GULF STREAM EXPLORATIONS. Observations of currents, 1888 and 1889 | 467–477 |
| No. 17. | REPORT on the resulting length and probable uncertainty of five principal base lines, measured with the Bache-Würdemann compensation base-apparatus between 1847 and 1855 | 479–491 |
| No. 18. | REPORT OF GEORGE DAVIDSON, assistant, appointed by the President of the United States as the Delegate to the Ninth Conference of the International Geodetic Association held at Paris October, 1889 | 493–503 |

Blank page retained for pagination

# ALPHABETICAL INDEX.

## A.


ABSTRACT OF CONTENTS OF REPORT. pp. v-vii.

ABSTRACTS OF REPORTS OF WORK ON THE ATLANTIC AND PACIFIC COASTS, IN THE INTERIOR, AND IN THE OFFICE AND SUB-OFFICES, forming Part II, pp. 19-100.

ACCOUNTING DIVISION. Annual report of, pp. 155-159. Reference to, p. 98. Statistics of work in, pp. 156-157.

ADAMS. (Wabaunsee County) Triangulation station in Kansas, p. 88.

ADAMS-CLARK-REINHARDT-ZEAN DALE. Quadrilateral in triangulation of Kansas, p. 89.

ADIE MAGNETOGRAPHS. Reference to use of, pp. 60-65.

ADDITIONAL DRAWINGS MADE DURING THE YEAR FOR NEW EDITIONS OF CHARTS PUBLISHED FROM ENGRAVED PLATES, p. 129.

ADDITIONAL FORCE REQUIRED IN CHART DIVISION p.147.

ADDITIONAL FORCE REQUIRED IN COAST AND GEODETIC SURVEY OFFICE, p. 122.

ADDITIONAL FORCE REQUIRED IN ENGRAVING DIVISION, p. 97.

ADDITIONAL ROOM REQUIRED FOR WORK OF COAST AND GEODETIC SURVEY OFFICE, p. 122.

ADDITIONS OF TOPOGRAPHICAL DETAILS TO THE ORIGINAL SURVEYS OF NANTUCKET AND MARTHA'S VINEYARD ISLANDS, pp. 28, 29.

ADDITIONS TO CHART CATALOGUE, p. 98.

AGENCIES (NEW) FOR SALE OF CHARTS AND PUBLICATIONS, p. 144.

AGGREGATE YEARS OF RECORD FROM AUTOMATIC TIDE GAUGES, p. 112.

AGGREGATE YEARS OF RECORD REDUCED, p. 112.

AIDS TO NAVIGATION. Recommended at Umatilla Reef, Washington Territory, p. 75. In Cobscook Bay, Maine, reference to, p. 21. Scarcity of, on southern coasts of Nantucket and Martha's Vineyard, p. 31.

ALA SPIT, WASHINGTON TERRITORY, p. 75.

ALABAMA, State of. Included in Section VIII, p. 55. Triangulation in, p. 55.

ALASKA. Included in Section XII, p. 78.

ALASKA AND BRITISH COLUMBIA. Preliminary survey of frontier line between, p. 83.

ALASKA BOUNDARY PARTIES. Assistance rendered to, by Assistant George Davidson, p. 67.

ALASKA BOUNDARY SURVEY. Estimate for, p. 13. Reference to, p. 96.

ALASKA COAST PILOT. Notice of work in connection with, p. 166.

ALASKA COMMERCIAL COMPANY, p. 94. Assistance received from, acknowledged, p. 83.

ALBUQUERQUE, N. MEX., p. 92.

ALDEN. Triangulation station in Massachusetts, p. 26.

ALLEGHANIES AND THE MISSISSIPPI RIVER. Magnetic stations between, occupied, p. 84.

ALMY, A. C., ENSIGN, U. S. N. Service on schooner *Earnest*, p. 77, 175, 176.

AMAGANSETT AND GREAT SOUTH BAY, LONG ISLAND. Triangulation between, completed, p. 34.

AMESBURY, MASS. Old triangulation station identified, p. 34.

ANACOSTIA, D. C., p. 42.

ANACOSTIA RIVER (OR EASTERN BRANCH OF THE POTOMAC), pp. 43, 44.

ANACOSTIA ROAD, DISTRICT OF COLUMBIA, p. 43.

ANCHORAGE. At Taku Harbor, Alaska, p. 79.

ANCLOTE ANCHORAGE, p. 52.

ANDERSON, E. A., ENSIGN, U. S. N. Services in Coast Pilot Division referred to, p. 19; service on schooner *Eagre* pp. 32, 36; service on steamer *Endeavor*, pp. 41, 45; service in Hydrographic Division, pp. 167, 174, 175, 176.

ANDREWS, PHILIP, ENSIGN, U. S. N. Service on steamer *Gedney*, p. 21; service on steamer *Blake*, pp. 46, 49; reference to, pp. 175, 176.

ANEGADA PASSAGE, p. 48.

ANNAPOLIS, MD. Results of spirit-leveling between tide-water at, and the capitol bench-mark at Washington, D. C., from observations in 1875, by F. W. Perkins, assistant. Appendix No. 15, pp. 461-466.

ANNAPOLIS HARBOR AND ROADS. Reference to resurvey of, p. 46.

ANNAPOLIS ROADS AND SEVERN RIVER. Topographical resurvey of, p. 40.

ANNUAL REPORT OF EXPENDITURES OF THE COAST AND GEODETIC SURVEY. Reference to, p. 155.

ANNUAL REPORTS OF OFFICE DIVISIONS. References to, pp. 95-99.

ANNUAL REPORT OF THE ASSISTANT IN CHARGE OF OFFICE AND TOPOGRAPHY, pp. 121-124.

ANNUAL REPORTS OF THE SUPERINTENDENT. Reference to, pp. 143-145; table showing distribution of, p. 145.

ANTELOPE. Triangulation station in Utah, p. 90.

APPALACHEE BAY, p. 52.

APPARATUS USED IN CURRENT OBSERVATIONS. Reference to, p. 48.

APPENDICES FORMING PART III OF THIS REPORT. Nos. 1 to 18, inclusive, titles and pages of, preceding this index.

APPENDICES TO ANNUAL REPORTS PRINTED SEPARATELY. Titles of, p. 145.

APPENDIX NO. 2. Reference to, p. 96.

APPENDIX NO. 3. Reference to, p. 96.

APPENDIX NO. 4. Reference to, p. 41.

APPENDIX NO. 8, 1887. Reference to, p. 48.

APPENDIX NO. 10. Reference to, p. 65.

APPENDIX NO. 15. Reference to, p. 48.

ARAGO (steamer). Use of and reference to, pp. 165, 177.

ARCHIVES AND LIBRARY. Annual report of, pp. 150-154; reference to, p. 98.

AREA OF HYDROGRAPHY, p. 112.

AREA OF RECONNAISSANCE, p. 111.

AREA OF TOPOGRAPHY SURVEYED, p. 111.

AREA OF TRIANGULATION, p. 111.

ARIZONA (Territory of). Included in Section XVI, p. 90.

ARKANSAS, State of. Included in Section VIII, p. 55.

ARKANSAS RIVER. Line of levels along the, p. 56.

ARLINGTON. Triangulation station in Wisconsin, p. 86.

ARRANGEMENT OF ABSTRACTS OF FIELD WORK in Part II, of annual report, referred to, 18.

ASHLEY RIVER, SOUTH CAROLINA, p. 47.

ASSISTANT ENGINEERS, U. S. N. Number of, attached to Coast and Geodetic Survey, p. 175.

ASSISTANT IN CHARGE OF OFFICE AND TOPOGRAPHY. Reference to annual report of, p. 95.
ASSISTANT SURGEONS, U. S. N. Number of, attached to Coast and Geodetic Survey, p. 175.
ASTORIA CHAMBER OF COMMERCE, p. 72.
ASTORIA, OREGON. Resurvey and examination of changes in vicinity of, pp. 72, 73.
ASTORIA PENINSULA, p. 72.
ASTRONOMICAL OBSERVATIONS. At Cape Fanshaw, Alaska, p. 82; for locating soundings off coast of Florida, p. 52.
ASTRONOMICAL OBSERVATIONS. ORIGINAL RECORDS. Number of volumes, p. 112.
ASTRONOMICAL PARTIES. Number of, p. 111.
ASTRONOMICAL WORK. Records and computations of, received, p. 159; statistics of, p. 111.
ATCHAFALAYA BAY, LOUISIANA. Hydrographic surveys in, p. 59.
ATCHAFALAYA RIVER, LOUISIANA. Triangulation of, p. 57.
ATLANTA AND MOBILE. Progress of triangulation between, p. 55.
ATLANTIC AND GULF COAST. Vessels and naval officers engaged in work on, p. 176.
ATLANTIC COAST. Progress of hydrographic work on, Appendix No. 5, pp. 161–163.
ATLANTIC COAST PILOT. Reference to, pp. 22, 29; data for p. 31.
ATMOSPHERIC REFRACTION. Observations to determine, p. 90.
ATTENDANCE of employés in Accounting Division, p. 158.
ATWOOD, CAPT. E. B., ASSISTANT QUARTERMASTER U. S. ARMY, DEPOT QUARTERMASTER, p. 61.
AUSTIN, A. A., PASSED ASSISTANT SURGEON, U. S. NAVY, p. 175.
AUTOMATIC TIDE-GAUGES DISCONTINUED. Number of, p. 112.
AUTOMATIC TIDE-GAUGES ESTABLISHED. Number of, p. 112.
AVERAGE NUMBER OF MEN ATTACHED TO VESSELS OF THE SURVEY DURING THE YEAR, p. 177.
AVERAGE NUMBER OF NAVAL OFFICERS ON DUTY ON THE COAST AND GEODETIC SURVEY DURING THE YEAR, p. 177.
AYRES, MISS S. C. Office of Assistant in Charge, pp. 99, 123.
AZIMUTH. Determined at West Base, on coast of Louisiana, pp. 57, 58; method of observing, p. 91; observed at Nashville, Tenn., p. 84; observed at station Bear, Perdido Bay, p. 53.
AZIMUTH STATIONS. Number of, p. 111.

**B.**

BACHE (steamer). Use of, and reference to, pp. 30, 31, 32, 49, 50, 51 52, 161, 162, 176, 177.
BACHE, C. M., ASSISTANT. Completion of the topographical survey of the west bank of the St. Croix River between Pleasant Point and Shortlands station, p. 20; reference to, p. 99.
BACHE, R. M., ASSISTANT. Corrections in and additions to the topographic and hydrographic surveys of the Delaware River, made necessary by changes which had occurred since former surveys, p. 38; reference to, p. 99.
BAHAMA ISLANDS, p. 48.
BAHIA HONDA. Reference to, p. 49.
BAILEY, MISS F. B. Office of Assistant in Charge, pp. 99, 123.
BAIRD, MISS JULIA. Services in Coast Pilot Division, pp. 19, 174.
BAKER'S POND. Triangulation station in Massachusetts, p. 25.
BALTIMORE AND POTOMAC RAILROAD BRIDGE, DISTRICT OF COLUMBIA, p. 43.
BARBADOS. Reference to, p. 48.
BARGE. Used in Coast and Geodetic Survey, p. 177.
BARKER, J. H. Chart Division, p. 147.
BARNARD, A. P. Service in Kansas, p. 89.
BARNARD, PROF. LOUIS H., ACTING ASSISTANT. Geodetic work in Pennsylvania, pp. 37–38.
BARNES ISLAND, WASHINGTON TERRITORY, p. 77.
BARNES SOUND, pp. 49, 50.
BARNSTABLE AND PLYMOUTH COUNTIES, MASS. Triangulation of, p. 25.
BARTLE, R. F. Engraving Division, pp. 134, 136, 137.
BARTLE, R. F., JR. Engraving Division, pp. 134, 136, 137.
BARTLETT, G. A., DISBURSING CLERK, TREASURY DEPARTMENT pp. 98, 122, 158.
BASE APPARATUS. Used in Los Angeles base measurement, p. 65.
BASE LINE. At Blue Buck Ridge, Sabine Pass, p. 57; at Grand Isle, Barataria Bay entrance, Louisiana, p. 57; at Los Angeles, Cal., pp. 64–65; measured at Cape Fanshaw, Alaska, p. 82; measured at Escambia Bay, Florida, p. 93; measured in Stephens passage, Alaska, p. 79; measurement of, in Minnesota, p. 87; on coast of Louisiana, pp. 57–58; on the Atchafalaya River, Louisiana, p. 57; wire measurement of (over water) in vicinity of Pearse Island, p. 81.
BASE LINES. Report on the resulting length and probable uncertainty of five principal, measured with the compensation base apparatus Bache-Würdemann, of the Coast Survey, between the years 1847 and 1855, inclusive, Appendix No. 17, pp. 479–491; statistics of, p. 111.
BASE MONUMENTS. Snelling Avenue base, p. 87.
BASSETT, R. T. Miscellaneous Division, p. 146.
BATCHELLER, GEO. S., ACTING SECRETARY OF THE TREASURY. Letter of, transmitting annual report of the Survey to Congress, p. iii.
BAUER, LOUIS A. Computing Division, p. 126.
BAY LA LAUNCH, p. 54.
BAY OF FLORIDA. Hydrographic surveys in the, pp. 49–51.
BAY RIDGE, MARYLAND. Detailed survey of, p. 40.
BAY RIDGE COMPANY, p. 40.
BAYARD, R. H. Services in Section I, p. 19.
BAYLOR, JAMES B., ASSISTANT. Establishment of meridian lines and standards of length at Binghamton, N. Y., and at Montrose, Pa., pp. 36–37; occupation of a station in Louisiana for magnetic observations, p. 56; determinations of the magnetic elements at stations in Texas and at a station in the Indian Territory, p. 60; occupation of a station in Tennessee for magnetic determinations, p. 84; determinations of the magnetic elements at stations in Ohio, Indiana, Illinois and Wisconsin, p. 84; determinations of the magnetic elements at stations in Colorado and New Mexico, pp. 91, 92.
BAYOU GRANDE. Topographical survey of, p. 54.
BEAR. Station in triangulation of Perdido Bay, p. 53.
BEAR POINT, p. 53.
BEAR RIVER. Reference to, p. 81.
BEAR RIVER FLATS, PORTLAND CANAL, p. 81.
BEAUTY (barge), p. 177.
BECK, C. A., GENERAL SUPERINTENDENT ILLINOIS CENTRAL R. R. Aid received from, p. 86.
BECK JAMES. Printing room, p. 135.
BEECHER, ALBERT M., ENSIGN, U. S. N. Service on steamer *Patterson*, pp. 78, 79, 175, 176.
BELL, J. A., ENSIGN, U. S. N. Service on steamer *McArthur*, p. 75; reference to, p. 175.
BELLINGHAM BAY, WASHINGTON TERRITORY. Hydrographic survey of, pp. 76, 77.
BENCH-MARKS. At Annapolis, Md., p. 41; at Arkansas City, Ark., p. 56; at Cairo, Ill., established by Gen. C. B. Comstock, U. S. Engineers, p. 86; at Grantville, Utah, p. 91; at Hooper, Utah, p. 91; at Little Rock, Ark, p. 56; at Menemsha Bight, p. 32; at Ogden Observatory and Huntsville, Utah, p. 90; at Rock Station, Massachusetts, p. 26; at Tremont, Mass., p. 26; at Villa Ridge, Ill., p. 86; at West Base, Argenta, Ark., p. 56; established along line of levels in Illinois and Tennessee, p. 86; in Arkansas, p. 56; in Massachusetts, p. 25; in the District of Columbia, p. 44; (permanent) established upon piers of Utah Central Railroad bridge near Ogden, p. 91; on Cape Cod, Massachusetts, pp. 23, 24.
BENNINGS, D. C. Topography in vicinity of, p. 43.
BENNING'S ROAD, DISTRICT OF COLUMBIA, p. 43.
BENTON, W. H. Drawing Division, pp. 128, 130, 131, 132.
BERING SEA. Reference to, p. 94.
BERLIN METRE No. 49. Reference to, p. 160.
BERRYHILL, T. A., ASSISTANT SURGEON, U. S. N. p. 175.
BERTHA. Alaska Commercial Company's steamer, p. 95.
BESNIR. Triangulation station in Washington Territory, p. 75.
BIG SPANISH AND KNIGHT'S KEY CHANNELS, FLORIDA REEFS. Hydrographic sheet, p. 51.
BINDING. Of volumes of records in archives recommended, p. 154.
BIRCH BAY, WASHINGTON TERRITORY, pp. 77, 78.
BISHOP AND CLERKS' LIGHT-HOUSE. Examination for shoal near, p. 32; hydrographic survey extended to, p. 29
BISPHAM, H. A., ENSIGN, U. S. N. Service on steamer *Bache*, p. 31; service on steamer *Bache* and schooner *Spy*, pp. 50, 25; reference to, pp. 175, 176.

BITLER, R. O., ENSIGN, U. S. N. Services on steamer *Gedney*, pp. 21, 72; reference to, pp. 175, 176.
BLAKE (steamer). Use of and reference to, pp. 22, 23, 30, 48, 49, 161, 162, 163, 165, 176, 177.
BLAKELY ISLAND, WASHINGTON TERRITORY, p. 78.
BLAKENEY, MAJ. J. T. Reference to assistance received from, p. 73.
BLOCK ISLAND, p. 27.
BLUE MOUNTAIN, CALIFORNIA, p. 67.
BON SECOUR RIVER, p. 54.
BOUNDARY LINE BETWEEN ALASKA AND BRITISH COLUMBIA. Organization of parties for a preliminary determination of, pp. 77, 94.
BOUNDARY LINE BETWEEN CALIFORNIA AND NEVADA. Reference to examination of, p. 99.
BOUNDARY LINE (INITIAL POINT) BETWEEN MEXICO AND CALIFORNIA. Reference to, p. 61.
BOUNDARY LINE OF THE DISTRICT OF COLUMBIA, p. 43.
BOUNDARY SURVEY OF ALASKA. Reference to, p. 67
BOURNE TOWNSHIP, MASSACHUSETTS, p. 25.
BOUTELLE, C. O., ASSISTANT. Recovery and re-establishment of stations of the triangulations of 1849, 1857, and 1865, for the extension of a tertiary triangulation, topography and hydrography, up the Cooper, Ashley, and Wando Rivers, South Carolina, p. 47; office work, p. 47; continuation of geodetic operations in the State of Wisconsin, p. 86; measurement of a base line in connection with geodetic operations in the State of Minnesota, p. 87; in charge of Coast and Geodetic Survey exhibit at Cincinnati Exposition, p. 95; correspondence relative to State surveys, p. 100.
BOUTELLE, J. B. Computing Division, pp. 125, 126.
BOWDWIN, HANS. Laborer, p. 146.
BOWEN ROAD, DISTRICT OF COLUMBIA, p. 43.
BOWER, MISS G. B. Services in Coast Pilot Division, pp. 19, 174.
BOYD, C. H., ASSISTANT. Continuation of the triangulation of the St. Croix River and of the lakes near its head towards the northeastern boundary, pp. 19, 20; engaged in office work, p. 20; triangulation of the Atchafalaya River, Louisiana, p. 57.
BOYD, ROBERT, CAPT., U. S. N. Member Navy-yard Commission, Atlantic coast, p. 93.
BRADFORD, GERSHOM, ASSISTANT. Extension of the line of levels of precision from Little Rock, Ark., towards the western boundary of the State, p. 56; in charge of Chart Division, pp. 98, 149; assistance in preparing data for map of Alaska, p. 100; reference to, p. 121.
BRAID, ANDREW, ASSISTANT. Connection by geodetic leveling of the tidal bench-marks at Annapolis, Maryland., pp. 40, 41; office work, p. 41; in charge of Instrument Division, pp. 97, 140; reference to, p. 121.
BRANNER, J. C. State Geologist of Arkansas, p. 56.
BREAKWATERS. At Wood's Holl, Mass., p. 33.
BRIDESBURG AND MARKET STREET. Revision of survey of Delaware River between, p. 38.
BRIDGEWATER, MASSACHUSETTS, p. 26.
BRISTOL, M. L., ENSIGN, U. S. N. Service on steamer *Gedney*, p. 72.
BROOKVILLE ROAD, DISTRICT OF COLUMBIA, p. 42.
BROWN, GUY W., ENSIGN, U. S. N. Service on steamer *Hassler*, pp. 62, 71, 175, 176.
BROWN, JOHN H. Laborer, p. 146.
BROWNSON, W. H., LIEUTENANT-COMMANDER, U. S. N., HYDROGRAPHIC INSPECTOR. Reference to, pp. 18, 45, 167, 175, 176; relieved from duty as Hydrographic Inspector, p. 82; member Navy-yard Commission, Atlantic coast, p. 93.
BRUCE, SANDY. Messenger, p. 146.
BRYANT, NEIL. Office of Assistant in Charge, pp. 99, 123; Computing Division, p. 124; Chart Division, p. 147.
BUCHANAN, PROF. A. H., ACTING ASSISTANT. Occupation of stations for connecting the triangulation of the State of Tennessee with the primary triangulation in northern Georgia, pp. 83, 84.
BULLARD, W. H. G., ENSIGN, U. S. N. Service on steamer *Bache*, p. 31; service on steamer *Gedney*, p. 72; reference to, pp. 175, 176.
BULLETINS. Reference to, p. 145.
BULLETIN NO. 10. REPORT ON THE SOUNDS AND ESTUARIES OF NORTH CAROLINA WITH REFERENCE TO OYSTER CULTURE. Referred to, pp. 46, 47.
BUREAU OF WEIGHTS AND MEASURES. Reference to, p. 36.
BURNETT, J. C., LIEUTENANT, U. S. N., ASSISTANT. Hydrographic surveys in the vicinity of Cape Flattery and in Neah Bay, Washington Territory, pp. 74, 75, 163.
BUTLER, WILLIAM H. Messenger, p. 146.
"BUTLER BUILDING." Use of, recommended for additional accommodation of work of Coast and Geodetic Survey Office, p. 124.
BUTT, PIERCE. Survey of District of Columbia, p. 44.
BUZZARD'S BAY, pp. 25, 34.

C.

CADEL, MISS F. Office of assistant in charge, pp. 99, 123.
CAIRO, ILL. Lines of leveling carried from towards Gulf of Mexico, pp. 85, 86.
CALAIS, ME. Reference to, p. 22; triangulation near, p. 19.
CALIFORNIA, State of. Included in Section X, p. 61.
CAMANO ISLAND, WASHINGTON TERRITORY, p. 75.
CANTWELL, JOHN, LIEUT., UNITED STATES REVENUE MARINE. Leveling in connection with tide gauge at St. Paul, Alaska, pp. 82, 83.
CAPE COD, MASSACHUSETTS. Encroachment of the sea upon the coast of, as shown by comparative surveys. Appendix No. 12, pp. 403–407. Cross-sections of the shore of, between Chatham and the Highland Light-house. Appendix No. 13, pp. 409–457.
CAPE FANSHAW, ALASKA. Surveys in vicinity of, p. 82.
CAPE FLATTERY. Hydrographic survey in vicinity of, pp. 74–75.
CAPE HATTERAS. Current observations north of, p. 48.
CAPE ORFORD AND ROGUE RIVER REEF. Hydrographic survey between, p. 72.
CAPE SABLE, p. 49.
CAPE SABLE AND PAVILION KEY. Topographical survey between, p. 51.
CAPE SAN MARTIN, CALIFORNIA, p. 66.
CAPE SEBASTIAN, OREGON, p. 71.
CARBON COUNTY, PA., p. 37.
CARD CATALOGUE OF BOUND BOOKS. In library of Coast and Geodetic Survey Office, completed, pp. 98, 154.
CARD CATALOGUE OF PAPERS RELATING TO WEIGHTS AND MEASURES. Reference to, p. 159.
CARIBBEAN SEA. Gauging of currents entering the, pp. 48–49.
CARLISLE, MISS ALICE F. Services in Coast Pilot Division, pp. 19, 174.
CARMAN, J. S. Engraving Division, p. 134.
CAROLINA HILL. Triangulation station in Massachusetts, pp. 25, 26.
CARPENTER (Naval). Attached to Coast and Geodetic Survey, p. 175.
CARRICO, T. W., p. 61.
CARVER TOWNSHIP, MASS., p. 25.
CASTLE PINCKNEY, Q. Triangulation station in South Carolina, p. 47.
CATALOGUE NUMBERS AND TITLES OF CHARTS, THE DRAWINGS OF WHICH, FOR PUBLICATION BY PHOTOLITHOGRAPHY WERE COMPLETED, BUT NOT PUBLISHED FOR WANT OF FUNDS, p. 129.
CATALOGUE NUMBERS AND TITLES OF CHARTS, THE DRAWINGS OF WHICH WERE REVISED AND COMPLETED AND THE CHARTS PUBLISHED FROM ENGRAVED PLATES DURING THE YEAR, p. 129.
CATALOGUE NUMBERS AND TITLES OF CHARTS, THE DRAWINGS FOR SECOND EDITIONS OF WHICH WERE REVISED, AND THE CHARTS PUBLISHED BY PHOTOLITHOGRAPHY DURING THE YEAR, p. 129.
CATALOGUE NUMBERS AND TITLES OF NEW CHARTS, THE DRAWINGS OF WHICH WERE REVISED AND COMPLETED, AND THE CHARTS PUBLISHED BY PHOTOLITHOGRAPHY DURING THE FISCAL YEAR 1888–'89, p. 128.
CEDAR KEYS, FLA., p. 50.
CEDAR KEYS AND LIGHT-HOUSE POINT. Hydrography completed between, pp. 49, 52–53.
CEDAR ISLAND LIGHT-HOUSE. Gardiner's Bay, Long Island, p. 35.
CENTENNIAL EXPOSITION OF THE OHIO VALLEY AND CENTRAL STATES. Exhibit of the Coast and Geodetic Survey at, p. 95.
CENTRAL AVENUE, DISTRICT OF COLUMBIA, p. 43.
CENTRAL PACIFIC R. R. Reference to, p. 91.

CENTER MARKET, WASHINGTON, D. C. Comparison of standards made in, p. 160.
CHABOT OBSERVATORY, OAKLAND, CAL. Determination of longitude of, p. 69; reference to, p. 67.
CHAMBER OF COMMERCE, SAN FRANCISCO, p. 100.
CHAPMAN, D. C. Electrotypist and photographer, reference to, pp. 97, 135.
CHARGE OF THE PACIFIC COAST WORK. Reference to assignment of Assistant George Davidson to, p. 68.
CHARLESTON, S. C. Recovery of triangulation stations in vicinity of, p. 47.
CHART DIVISION. Annual report of, p. 147.
CHART PRINTING. Estimate for additional facilities for, p. 16.
CHARTS ADDED TO CATALOGUE DURING THE YEAR, p. 135.
CHARTS AND PUBLICATIONS ISSUED DURING THE YEAR. Number and value of, p. 144.
CHARTS, COAST AND GEODETIC SURVEY. Increased demand for, pp. 95, 143.
CHARTS, COMPLETED AND PUBLISHED BY PHOTOLITHOGRAPHY, p. 128.
CHARTS, COMPLETED AND PUBLISHED FROM ENGRAVED PLATES DURING THE YEAR, p. 129.
CHARTS COMPLETED BUT NOT PUBLISHED, p. 129.
CHARTS. Corrections and additions to drawings of, p. 130-132; method of supplying to naval vessels and branch hydrographic offices of the Navy, p. 98; (new) received in chart room during the year, list of, pp. 147-148; receipts, issues, and general distribution of during the year, pp. 148, 149; revised and second editions published by photolithography, p. 129.
CHARTS PUBLISHED BY PHOTOLITHOGRAPHY. Number of, p. 113.
CHARTS PUBLISHED BY PHOTOLITHOGRAPHY WITHDRAWN FROM CIRCULATION. Number of, p. 113.
CHARTS SUPPLIED TO SALE AGENTS, p. 143.
CHASE, A. W., ASSISTANT. Reference to, p. 71.
CHATHAM, MASS., pp. 23, 36.
CHATHAM STRAIT, ALASKA, p. 80.
CHATTANOOGA, TENN. Reference to, p. 83.
CHENIERE TIGRE, LA. Base-line site selected at, p. 58.
CHESAPEAKE BAY. Reference to, p. 40.
CHESTER, C. M., COMMANDER U. S. N. Member of Navy-yard Site Commission, Pacific coast, p. 93.
CHICAGO, ILL. Magnetic observations in old university grounds, p. 84.
CHICAGO, KANSAS AND NEBRASKA R. R., p. 89.
CHIEF OF ENGINEERS, U. S. ARMY. Reference to, p. 160.
CHIEFS OF DIVISIONS, COAST AND GEODETIC SURVEY OFFICE, p. 96.
CHILCAT RIVER, ALASKA, p. 94.
CHILCOOT RIVER, ALASKA, p. 94.
CHILTON, W. B. Clerk to the Superintendent, pp. 99, 123.
CHRISTIE, ALEX. S. In charge of Tidal Division, Coast and Geodetic Survey Office, pp. 97, 142. Reference to, p. 121.
CHUCKANUT BAY, WASHINGTON TERRITORY, p. 76.
CINCINNATI, OHIO. Magnetic observations and azimuth determined at, p. 84.
CISCO, EASTLAND COUNTY, TEX. Magnetic observations at, p. 60.
CITY CREEK. Triangulation station in Utah, p. 90.
CITY ENGINEER OF BINGHAMTON, N. Y., p. 36.
CITY OF COLUMBUS (steamer). Wreck of, p. 27.
CIVIL SERVICE COMMISSION. Reference to, p. 96.
CLARK. Triangulation station in Kansas, p. 88.
CLARK, Dr. J. J. Service in connection with Coast and Geodetic Survey exhibit at Cincinnati Exposition, p. 95; verifier and adjuster of weights and measures, pp. 98, 159.
CLARK, R. A. H. Survey of District of Columbia, p. 43.
CLARKE, W. H., Division Superintendent Illinois Central Railroad. Aid received from, p. 86.
CLARK ISLAND, WASHINGTON TERRITORY, p. 77.
CLARVOE, G. W. Carpenter shop, p. 140.
CLEVELAND, OHIO. Magnetic observations at, p. 84.
CLEVELAND PASSAGE, ALASKA, p. 82.
CLOVER, R. T. Pay yeoman steamer *Endeavor*, p. 46.
COAST AND GEODETIC SURVEY. Letter of the Secretary of the Treasury, transmitting to Congress the annual report of, p. iii; report of progress in work of, submitted to the Secretary of the Treasury, p. 1; progress in work referred to, p. 1; annual report of, general form and arrangement of parts, p. 1; maps of general progress and index maps accompanying report, reference to, p. 1; general statement of progress in field work, pp. 2-4; in office work, pp. 4-5; discoveries and developments, pp. 5-6; bulletins, p. 6; special scientific work, pp. 6-10; explanation of estimates, pp. 10-11; estimates in detail, pp. 11-17; summary of field and office work for fiscal year, pp. 18-19; tabular statements of naval officers attached to, during the fiscal year and on June 30, 1889, pp. 175-176; vessels in the service of, their names, tonnage, etc., p. 177; number of men attached to vessels of, p. 177.
COAST AND GEODETIC SURVEY OFFICE. Work of, summarized, pp. 4-5; Assistant in Charge, reference to, p. 5; detailed notice of operations of, at close of Part II, referred to, p. 5; publication and distribution from, of charts, notices to mariners, tide tables, coast pilots, and bulletins, p. 5; distribution of annual reports of the Superintendent from, p. 5; statement of work of, during fiscal year, pp. 95-99; annual report of Assistant in Charge and chiefs of divisions of, Appendix No. 4, pp. 121-160; annual report of Hydrographic Inspector, pp. 161-177.
COAST PILOT DIVISION. Annual report of, pp. 173-174; notice of work of, p. 166.
COAST PILOT VOLUMES. Reference to, pp 143, 144, 145, 173, 174.
COAST PILOT WORK, pp. 67, 68.
COAST RANGE, p. 66.
COCKSCOMB HILL, NEAR ASTORIA, OREGON, pp. 72, 73.
COEFFICIENT OF EXPANSION OF BASE BARS, p. 87.
COHUTTA MOUNTAIN. Triangulation station in Georgia, p. 83.
COLONNA, B. A., ASSISTANT IN CHARGE OF OFFICE AND TOPOGRAPHY, reference to, p. 18; location of wharves in the Potomac River for additions to the charts, p. 45; reference to, p. 95; annual report of, Appendix No. 4, pp. 121-124.
COLORADO (State of), included in Section XVI, p. 90.
COLORADO, MITCHELL COUNTY, TEX. Magnetic observations at, p. 60.
COLUMBIA RIVER. Resurveys and examination of changes in, pp. 72-73
COLUMBIA RIVER ENTRANCE, p. 72.
COLUMBIAN UNIVERSITY. Reference to, p. 123.
COMMANDANT OF THE PENSACOLA NAVY-YARD. Reference to, p. 93.
COMMISSIONERS OF THE STATE SURVEY OF MASSACHUSETTS. Reference to, pp. 25, 26.
COMMITTEE METRE AND LAKE SURVEY STANDARD. Comparisons between, p. 160.
COMPARING VAULT. Construction of a, p. 99.
COMPARISONS OF BASE BARS, p. 65.
COMPLETION OF THE HYDROGRAPHY OF COBSCOOK BAY, MAINE, p. 21.
COMPLETION OF THE SHORE LINE RESURVEYS OF THREE MILE HARBOR, MORICHES BAY, AND THE OUTER BEACH, LONG ISLAND, p. 35.
COMPLETION OF THE TOPOGRAPHICAL SURVEY OF COBSCOOK BAY, pp. 21-22.
COMPLETION OF THE TOPOGRAPHICAL SURVEY OF THE WEST BANK OF THE ST. CROIX RIVER, BETWEEN PLEASANT POINT AND SHORTLANDS STATION, p. 20.
COMPUTATIONS. Number of cahiers, p. 112.
COMPUTATIONS. Number of volumes, p. 112.
COMPUTING DIVISION COAST AND GEODETIC SURVEY OFFICE, p. 96. Annual report of the, pp. 124, 127.
COMSTOCK, GEN. C. B., U. S. ENGINEERS. Reference to, p. 86.
CONE PEAK. Triangulation station in California, p. 66.
CONEY ISLAND, NEW YORK, p. 28. New buoyed channel along shore of, p. 35. Positions in vicinity of, occupied for current observations, p. 36. Sand flats to westward of, p. 35.
CONNECTICUT, State of, included in Section II, p. 34.
CONNECTION BY GEODETIC LEVELING OF THE TIDAL BENCH-MARKS AT ANNAPOLIS, MD., pp. 40, 41.
CONNECTION OF TRANSCONTINENTAL TRIANGULATION WITH STATE TRIANGULATION IN INDIANA. Reconnaissance for, p. 85.
CONNECTION (trigonometric) of longitude station at Port Townsend, Wash., with the triangulation, p. 73.
CONSTANT, W. M., ENSIGN, U. S. N. Service on steamer *Bache*, p. 31. Service on steamer *Endeavor*, p. 46. Reference to, p. 175.

CONSTRUCTION OF BUILDINGS FOR A SELF-REGISTERING MAGNETIC STATION AT SAN ANTONIO, TEX., pp. 60, 61.
CONTINUATION OF GEODETIC OPERATIONS IN THE STATE OF WISCONSIN, p. 86.
CONTINUATION OF THE DETAILED TOPOGRAPHICAL SURVEY OF THE DISTRICT OF COLUMBIA, pp. 41-44.
CONTINUATION OF THE DETERMINATIONS OF TOWN BOUNDARY LINES IN THE STATE OF MASSACHUSETTS, pp. 25, 26.
CONTINUATION OF THE TRIANGULATION IN NORTHEASTERN PENNSYLVANIA REQUIRED TO COMPLETE THE PAMPLICO-CHESAPEAKE-LAKE ONTARIO ARC OF THE MERIDIAN, pp. 37, 38.
CONTINUATION OF THE TRIANGULATION OF THE ST. CROIX RIVER, AND OF THE LAKES NEAR ITS HEAD TOWARDS THE NORTHEASTERN BOUNDARY, pp. 19, 20.
CONTINUATION OF TIDAL RECORD AT THE AUTOMATIC TIDAL STATION AT SAUCELITO, BAY OF SAN FRANCISCO, p. 70.
CONTINUATION OF TIDAL RECORD BY MEANS OF AUTOMATIC TIDE GAUGE AT SANDY HOOK, NEW JERSEY, p. 37.
CONTINUOUS RECORD OF MAGNETIC VARIATION AT LOS ANGELES, CAL., p. 66.
COOPER, ASHLEY, AND WANDO RIVERS, SOUTH CAROLINA. Surveys of, pp. 47, 48.
CORRECTION OF AIDS TO NAVIGATION ON CHARTS. Reference to, p. 98.
CORRECTIONS AND ADDITIONS TO CHART PLATES, p. 134.
CORRECTIONS AND ADDITIONS TO DRAWINGS OF CHARTS DURING THE YEAR ENDING JUNE 30, 1889, p. 130, 132.
CORRECTIONS IN AND ADDITIONS TO THE TOPOGRAPHIC AND HYDROGRAPHIC SURVEYS OF THE DELAWARE RIVER, MADE NECESSARY BY CHANGES WHICH HAD OCCURRED SINCE FORMER SURVEYS, p. 38.
COSMOS (steam launch). Use of and reference to, pp. 79, 164.
COTTON. Station in triangulation of Perdido Bay, p. 54.
COURTENAY, E. H. Computing Division, p. 125.
COX. Triangulation station in Washington Territory, p. 75.
COX, J. P. Engraving Division, p. 134, 137.
CRAIG, N. B. Service in Delaware River survey, p. 38.
CRAUFURD, G. B. Printing room, p. 135.
CRESCENT CITY, CAL., pp. 61, 64. Hydrography in vicinity of, pp. 70, 71.
CRESCENT HARBOR, WASHINGTON TERRITORY. Survey of, pp. 75, 76.
CROCKER. Triangulation station in Massachusetts, p. 25.
CROSBY, F. H., LIEUT. U. S. N., ASSISTANT. Completion of the hydrography of Cobscook Bay, Maine, p. 21. Reference to, pp. 29, 161.
CROSS SECTIONS OF THE SHORE OF CAPE COD BETWEEN CHATHAM AND THE HIGHLAND LIGHT-HOUSE. Appendix No. 13, pp. 409-457.
CULBERTSON (Switzerland County). Triangulation station in Indiana, p. 85.
CULVERWELL, J. G. Watchman, p. 146.
CURRENTS. Between Tatoosh Island and Cape Flattery, p. 75; in Muskeget Channel, pp. 29-31; in Rosario Strait, p. 77; in Wood's Holl, Mass., pp. 28, 33; Observations of 1888 and 1889, Gulf Stream explorations, Appendix No. 16, pp. 467-477; on coast of Maine, pp. 22, 23.
CURRENT FLOATS. New form of, pp. 162, 163.
CURRENT OBSERVATIONS. In Northwest Channel, Key West, by United States Engineers, p. 52; in Mona, Anegada, and Windward Island passages, and in the Equatorial Stream between Barbados and Tobago, pp. 48-49; in the Gulf Stream and Caribbean Sea, pp. 48, 49; north of Cape Hatteras, p. 48.
CURRENT STATIONS. Number of, occupied by hydrographic parties, p. 112.
CYPRESS-BIG WAX. Line in triangulation of Louisiana, p. 57.

## D.

DAISY (Steamer). Use of and reference to, pp. 29, 36, 161, 177.
DAKOTA, State of. Included in Section XV, p. 87.
DARNALL, C. N. Carpenter shop, p. 140.
DAVENPORT, IOWA. Magnetic observations at, p. 88.
DAVIDSON, GEORGE, ASSISTANT. Reference to, p. 63; measurement of the Los Angeles primary base line, pp. 64, 65; assistance rendered to Alaska boundary survey parties, pp. 67, 95; assistance rendered in telegraphic longitude work, p. 67; general charge of the land work upon the Pacific coast; establishment of a meridian line and a standard of length in Golden Gate Park, San Francisco; magnetic and tidal work, etc., pp. 66-68; Coast Pilot work, pp. 67, 68; appointed a delegate to the International Geodetic Association, p. 68; determination of longitude of Chabot Observatory, p. 69; tide observations at Saucelito, San Francisco Bay, Cal., p. 70; reference to, pp. 72, 77, 78; reports by, Appendix No. 10, pp. 217-231; Appendix No. 18, pp. 493-503; tide observations in Alaska, pp. 82, 83; in charge of sub-office at San Francisco, p. 99; elected member of Chamber of Commerce, San Francisco, p. 100.
DAVIES, PROF. J. E., ACTING ASSISTANT. Continuation of geodetic operations in the State of Wisconsin, p. 86.
DAVIS, W. H. Engraving Division, pp. 134-136.
DEADMAN'S BAY, FLORIDA., p. 52.
DEANE, C. W., PASSED ASSISTANT SURGEON, U. S. N. Service on steamer *McArthur*, p. 75; reference to, p. 175.
DECEPTION PASS, WASHINGTON TERRITORY, p. 75.
DEEP SEA CURRENT STATIONS. Number of, p. 112.
DEEP SEA SOUNDINGS. Number of, p. 112.
DEEP SEA SUB-CURRENT OBSERVATIONS. Number of, p. 112.
DEEP SEA SURFACE CURRENT OBSERVATIONS. Number of, p. 112.
DEEP SEA TEMPERATURE OBSERVATIONS. Number of, p. 112.
DEETZ, CHARLES H. Service on coast of Florida, p. 55.
DELAWARE. State of, included in Section II, p. 34.
DELEHANTY, D., LIEUTENANT, U. S. N., ASSISTANT. Service in command of steamer *Hassler*, p. 62; hydrographic survey on the coast of California from off the eastern end of San Onofre Mountain to Newport Landing, and hydrographic examination for a shoal reported off Point Firmin, pp. 63, 64; hydrographic surveys in the vicinity of Crescent City, Cal., pp. 70, 71; reference to, pp. 163, 175, 176.
DEL MAR, CAL., pp. 62, 63.
DELTA ROCK. Triangulation station in Washington Territory, p. 75.
DE LUCE, W. H. Service on steamer *Blake*, pp. 46, 49.
DEMING, N. MEX. Latitude and magnetic observations at, p. 92.
DENIS, VICENTE. San Francisco sub-office, p. 100.
DENNIS, W. H., ASSISTANT. Reference to, pp. 22, 121; in charge of Drawing Division, Coast and Geodetic Survey Office, pp. 96, 128; in charge of Chart Division, pp. 98, 147.
DENNY'S RIVER, MAINE. Reference to, p. 20.
DENVER, COLO. Magnetic observations at new station, p. 92.
DEPARTMENT OF STATE. Reference to surveys requested by, p. 80; preliminary survey of the frontier line between Alaska and British Columbia undertaken at the instance of, p. 83.
DEPARTMENTS OF THE GOVERNMENT. Information furnished to, in reply to special requests, Appendix No. 3, pp. 115-119.
DEPARTURE BAY, p. 78.
DESCRIPTION OF TWO NEW PORTABLE TRANSIT INSTRUMENTS FOR LONGITUDE WORK. Appendix No. 6, pp. 213-216.
DESCRIPTIVE REPORTS. Of hydrographic work at Annapolis Harbor, Maryland, p. 41; of hydrographic work on coast of Florida by steamer *Bache*, reference to, p. 49; of hydrography coast of Washington Territory, p. 77; of hydrography in vicinity of Cape Charles, Va., p. 45; of hydrography, Nantucket and Vineyard Sounds, pp. 29, 31; of hydrography of Cobscook Bay, Maine, reference to, p. 21; of topographical work on coast of Oregon, pp. 71, 72; of topography near Wood's Holl, Mass., p. 33; of topography of coast of Maine, p. 23; of topography of Cobscook Bay, Maine, referred to, pp. 20, 22; of triangulation and topography on coast of Washington Territory, pp. 77, 78.
DESERET UNIVERSITY, SALT LAKE CITY, p. 91.
DES MOINES, IOWA. Magnetic observations at, p. 88.
DETERMINATION OF THE GEOGRAPHICAL POSITIONS OF LIGHT-HOUSES IN NARRAGANSETT BAY AND APPROACHES. IDENTIFICATION OF A STATION OF THE OLD TRIANGULATION AT AMESBURY, MASS., p. 34.
DETERMINATIONS OF THE MAGNETIC ELEMENTS AT STATIONS IN COLORADO AND NEW MEXICO, pp. 91, 92.

DETERMINATIONS OF THE MAGNETIC ELEMENTS AT STATIONS IN IOWA, NEBRASKA, AND KANSAS, p. 88.
DETERMINATIONS OF THE MAGNETIC ELEMENTS AT STATIONS IN OHIO, INDIANA, ILLINOIS, AND WISCONSIN, p. 84.
DETERMINATIONS OF THE MAGNETIC ELEMENTS AT STATIONS IN TEXAS AND AT A STATION IN THE INDIAN TERRITORY, p. 60.
DEVIL'S BRIDGE, pp. 27, 31.
DEVIL'S FOOT ISLAND, MASS., p. 33.
DEVIL'S POINT, ESCAMBIA BAY, FLA., p. 93.
DICKINS, E. F., ASSISTANT. Measurement of the Los Angeles primary base line, pp. 64, 65; topographical reconnaissance of the coast of Oregon between Rogue River and Cape Sebastian completed; topographical survey of the Oregon coast between Coos Bay and the Umpquah River finished, pp. 71, 72; engaged in office work, p. 72.
DICKSON, JAMES F. Printing room, p. 135.
DISBURSING AGENT. Needed for Coast and Geodetic Survey, pp 96, 122.
DISBURSEMENT OF FUNDS. For the Coast and Geodetic Survey, p. 158.
DISTRIBUTION OF ANNUAL REPORTS, BULLETINS, AND NOTICES TO MARINERS. Reference to, p. 98.
DISTRIBUTION OF THE PARTIES OF THE COAST AND GEODETIC SURVEY UPON THE ATLANTIC, GULF OF MEXICO, AND PACIFIC COASTS, AND IN THE INTERIOR OF THE UNITED STATES, DURING THE FISCAL YEAR ENDING JUNE 30, 1889. Appendix No. 1, pp. 103–109.
DISTRICT OF COLUMBIA. Included in Section III, p. 40; reference to, p. 96.
DIVISIONS OF COAST AND GEODETIC SURVEY OFFICE. Reference to annual reports of work of, p. 95.
DIVISION SUPERINTENDENT, MISSOURI PACIFIC RAILROAD. Reference to, p. 56.
DIXON. Triangulation station in Washington Territory, p. 75.
DIXON ENTRANCE. Dangerous winds in vicinity of, p. 81.
DODD, W. L., ENSIGN U. S. N. Service on steamer *Hassler*, pp. 62, 71; reference to, pp. 175, 176.
DODGE CITY, KANS. Magnetic observations at, p. 88.
DOLPH, SENATOR. Reference to, p. 72.
DONN, F. C., hydrographic draughtsman, pp. 19, 123, 167, 169–173.
DONN, JOHN W., ASSISTANT. Reference to, p. 27; topographic resurvey of parts of the north and south shores of Martha's Vineyard; also of the shore-line of No Man's Land, pp. 32, 33; topographical resurvey of Annapolis Harbor and Roads, p. 40; continuation of the detailed topographical survey of the District of Columbia, pp. 41, 42; supervision of topographical work in the District of Columbia, p. 42; establishment of permanent benchmarks for the topographical survey of the District of Columbia, p. 44.
DOOLITTLE, M. H. Computing Division, p. 125.
DORN, E. J., LIEUTENANT, U. S. N., pp. 175, 176.
DRAKE, J. C., ENSIGN, U. S. N., ASSISTANT. Oyster-bed survey, North Carolina, pp. 46, 47; reference to, pp. 162, 175, 176.
DRAKE, N. H., PASSED ASSISTANT SURGEON, U. S. N. Service on steamer *Hassler*, p. 62; reference to, pp. 175, 176.
DRAUGHTSMAN (additional) required in Hydrographic Division, p. 168.
DRAWING DIVISION. Annual report of, pp. 127–133; reference to, p. 196.
DRAWINGS COMPLETED FOR CHARTS, THE ENGRAVED PLATES OF WHICH WERE IN HAND DURING THE YEAR, p. 129.
DRAWINGS. For new editions of charts, p. 129.
DRAYTON HARBOR, WASHINGTON TERRITORY, p. 78.
DRIFT (schooner), p. 177.
DUESBERRY, J. M. Library and archives, pp. 98, 154.
DUNN, J. L. Service on steamer *Bache*, p. 31; service on steamer *Bache* and schooner *Spy*, pp. 50, 53.
DUNNING, W. B., PASSED ASSISTANT ENGINEER, U. S. N. Service on steamer *McArthur*, p. 75. Reference to, p. 175.
DUNTZE ROCKS, STRAITS OF FUCA, p. 75.
DUPLICATE RECORDS. Number of cahier, p. 112; number of volumes, p. 112.
DUXBURY TOWNSHIP, MASS., p. 25.
DWIGHT, KANS., p. 89.
DYER, HORACE. Fireman, p. 146.

E.

EAGLE HARBOR, WASHINGTON TERRITORY, pp. 75, 77.
EAGRE (schooner). Use of and reference to, pp. 29, 36, 161, 176, 177.
EARNEST (schooner). Use of and reference to, pp. 76, 77, 164, 176, 177.
EAST BAHIA HONDA KEY, p. 49.
EAST BAY, p. 54.
EASTERN BRANCH OF THE POTOMAC (OR ANACOSTIA RIVER), p. 42.
EDGARTOWN, MASS., p. 30.
EDGARTOWN HARBOR, MARTHA'S VINEYARD. Recent changes in the south inlet into. Appendix No. 14, pp. 459–460.
EDMONDS, FRANK W. Clerk. Service in Los Angeles base measurement, pp. 64, 65, 67. San Francisco suboffice, p. 160.
EIMBECK, WILLIAM, ASSISTANT, p. 34; occupation of stations for the extension to the eastward in Utah of the primary triangulation near the thirty-ninth parallel, pp. 90–91; engaged in office work, p. 91.
EICHHOLTZ, HUGO G. Chart Division, pp. 123, 147. Death of referred to, pp. 123, 124, 147.
ELECTROTYPE PLATES MADE. Number of, p. 113.
ELECTROTYPING. Statistics of, p. 133.
ELEVATIONS DETERMINED TRIGONOMETRICALLY. Number of, p. 111.
ELLICOTT, EUGENE, ASSISTANT. Completion of the topographical survey of Cobscook Bay, pp. 21–22; engaged in office work, p. 22; triangulation in the vicinity of Charleston, S. C., and up the Cooper, Ashley, and Wando Rivers, South Carolina, pp. 47–48.
ELLIOTT, W. P., LIEUTENANT, U. S. N., ASSISTANT. Hydrographic resurveys and examination in Nantucket Sound, p. 32; observations of currents in New York Lower Bay, p. 36; reference to, pp. 175, 176.
EL PASO, TEX. Magnetic observations at, p. 60.
EMPIRE CITY, OREGON, p. 71.
EMPORIA, KANS. Magnetic observations at, p. 88.
ENCROACHMENT OF THE SEA UPON THE COAST OF CAPE COD, MASS., AS SHOWN BY COMPARATIVE SURVEYS. Appendix No. 12, pp. 403–407.
ENDEAVOR (steamer). Use of and reference to, pp. 35, 41, 45, 59, 162, 165, 167, 176, 177.
ENGINEER COMMISSIONER OF THE DISTRICT OF COLUMBIA, p. 44.
ENGINEERS, U. S. A. Information furnished by, p. 52; tidal and current observations in Northwest Channel, Key West, p. 52.
ENGRAVED CHARTS WITHDRAWN FROM CIRCULATION. Statistics of, p. 113.
ENGRAVED PLATES. Number of, p. 133.
ENGRAVED PLATES OF COAST PILOT CHARTS. Number of, p. 113.
ENGRAVED PLATES OF MAPS AND CHARTS COMPLETED, COMMENCED, AND IN PROGRESS DURING THE FISCAL YEAR ENDING JUNE 30, 1890. Tabular statement of, pp. 136–137.
ENGRAVED PLATES OF PRELIMINARY CHARTS AND DIAGRAMS FOR THE COAST AND GEODETIC SURVEY REPORTS. Number of, p. 113.
ENGRAVING. Statistics of, p. 133.
ENGRAVING AND PRINTING. Statistics of, p. 113.
ENGRAVING DIVISION. Annual report of, pp. 133–137; reference to, p. 96; statistics of work of, p. 133.
ENSIGNS. Number of, attached to Coast and Geodetic Survey, p. 175.
ENTHOFFER, E. J. Engraving Division, pp. 134, 137.
ENTHOFFER, JOSEPH. Engraving Division, pp. 134, 136, 137.
ENTWISTLE, J. C. Engraving division, pp. 134, 136, 137.
EQUATORIAL STREAM BETWEEN BARBADOS AND TOBAGO. Current observations in the, pp. 48–49.
ERICHSEN, P. Drawing Division, pp. 127, 130, 131.
ESCAMBIA BAY. Survey of, for Navy Yard Site Commission, pp. 54, 93.
ESHLEMAN, E. Instrument Division, p. 139.
ESKRIDGE, WABAUNSEE COUNTY, KANS., p. 88.
ESTABLISHMENT OF MERIDIAN LINES AND STANDARDS OF LENGTH AT BINGHAMTON, N. Y., AND AT MONTROSE, PA., pp. 36–37.

ESTABLISHMENT OF PERMANENT BENCH-MARKS FOR THE TOPOGRAPHICAL SURVEY OF THE DISTRICT OF COLUMBIA, pp. 44-45.
ESTIMATES, COAST AND GEODETIC SURVEY. For fiscal year ending June 30, 1891, p. 11-17; explanation of estimates, pp. 6-10; estimate for party expenses, pp. 11-13; for contribution to International Geodetic Association, p. 13; for Alaska boundary survey, p. 13; for repairs and maintenance of vessels, p. 13; for pay of field officers, pp. 13-14; for pay of office force, pp. 14-15; for office expenses, p. 15; for additional facilities for chart printing, p. 16; for rent of office buildings, p. 16; for new furniture and outfitting, p. 16; for publishing observations, p. 16; proviso in reference to subsistence allowances, p. 16; estimate for printing and binding, p. 17; for office of Construction of Standard Weights and Measures, p. 17.
EVANS, H. C. Engraving Division, pp. 134, 136, 137.
EVANS, G. R., ENSIGN, U. S. N. Service on schooner *Eagre*, p. 30; service on steamer *Endeavor*, p. 59; reference to, pp. 175, 176.
EXAMINATION AND REPORT OF CHANGES IN THE WATER-FRONT AT SEATTLE AND VICINITY, p. 74.
EXAMINATION OF ACCOUNTS of Assistant in charge of office and topography, p. 155.
EXAMINATION OF ACCOUNTS of Coast and Geodetic Survey, p. 156.
EXAMINATION OF NORTHWEST BAR, KEY WEST HARBOR. Hydrographic sheet, p. 51.
EXCHANGES OF TELEGRAPHIC SIGNALS FOR LONGITUDE BETWEEN SAN FRANCISCO AND MOUNT HAMILTON, SAN FRANCISCO AND SACRAMENTO, SAN FRANCISCO AND POINT ARENA, POINT ARENA AND SACRAMENTO, SACRAMENTO AND MARYSVILLE, SACRAMENTO AND LOS ANGELES, LOS ANGELES AND SAN FRANCISCO, CHABOT OBSERVATORY AT OAKLAND AND SAN FRANCISCO, LOS ANGELES AND NEEDLES, AND SACRAMENTO, CALIFORNIA, AND VERDI, NEVADA; ALSO DETERMINATIONS OF LATITUDE AND THE MAGNETIC ELEMENTS AT SACRAMENTO, POINT ARENA, MARYSVILLE, AND LOS ANGELES, pp. 68-69.
EXCHANGES OF TELEGRAPHIC SIGNALS FOR LONGITUDE BETWEEN PORT TOWNSEND AND SEATTLE; BETWEEN SEATTLE AND WALLA WALLA; BETWEEN WALLA WALLA, WASHINGTON TERRITORY, AND HELENA, MONTANA; AND BETWEEN HELENA AND SPOKANE FALLS, WASHINGTON TERRITORY, pp. 73-74.
EXCHANGES OF TELEGRAPHIC SIGNALS FOR THE DETERMINATION OF THE LONGITUDE OF HELENA, MONTANA, pp. 92-93.
EXCHANGES OF TELEGRAPHIC SIGNALS FOR THE DETERMINATION OF THE LONGITUDE OF VERDI, NEVADA, p. 92.
EXHIBIT OF COAST AND GEODETIC SURVEY AT CINCINNATI EXPOSITION. Preparation of pamphlet descriptive of, p. 95.
EXPLANATION OF ESTIMATES, pp. 10-11.
EXTENSION OF THE LINE OF LEVELS OF PRECISION FROM LITTLE ROCK, ARK., TOWARDS THE WESTERN BOUNDARY OF THE STATE, p. 56.
EXTENSION OF THE TOPOGRAPHICAL SURVEY OF THE SOUTH COAST OF CALIFORNIA, FROM DEL MAR TO BEYOND OCEANSIDE, pp. 62-63.
EXTRA ENGRAVING, p. 134.

F.

FAIRCHILD, C. S., SECRETARY OF THE TREASURY, p. 122.
FAIRFIELD, W. B., EXTRA OBSERVER. Service in triangulation in Alabama, p. 55; service in Louisiana, p. 58; service in Ohio and Indiana, p. 85.
FAIRFIELD, G. A., ASSISTANT. Reconnaissance and building of signals in connection with the transcontinental triangulation in Ohio and Indiana, pp. 84, 85; service in Accounting Division, p. 155.
FAIRMOUNT DAM AND GRAY'S FERRY. Topographical survey of the Schuylkill River completed between, p. 39.
FALLS OF COBSCOOK AND DENNYSVILLE, ME. Topography completed between, p. 20.
FALMOUTH, MASS., p. 29; triangulation station in, p. 25.
FALMOUTH TOWNSHIP, MASS., p. 25.
FALSE BAY, CAL., p. 61.
FALSE CHANNEL, near Cape Charles, Va., pp. 45, 46.
FARQUHAR, HENRY. Computing Division, p. 126.
FIDALGO BAY, WASHINGTON TERRITORY, p. 77.
FIELD AND OFFICE WORK OF THE COAST AND GEODETIC SURVEY. Statistics of, pp. 111-113.
FIELD OFFICERS. Estimate for pay of, p. 13.
FIELD, W. R. M., ENSIGN, U. S. N. Service on schooner *Eagre*, p. 30; reference to, p. 175.
FIGURE OF THE EARTH. Operations for determining, p. 100.
FILLMORE, WILLARD, AND HIDDEN INLETS, AND TONGASS PASS. Surveys of, p. 81.
FINISHED CHARTS PUBLISHED FROM ENGRAVED PLATES. Total number of, p. 113.
FISCHER, E. G. Chief mechanician; reference to, pp. 97, 138, 163.
FISCHER, L. A. Instrument Division, p. 139.
FISHERMAN'S INLET. Tide gauge at, p. 45.
FISHER'S POINT AND HEAD OF SMITH'S ISLAND, DELAWARE RIVER. Corrections of survey between, completed, p. 38.
FITCH, MRS. JENNIE. Chart Division, p. 147.
FLEMER, J. A., AID, p. 42; continuation of the detailed topographical survey of the District of Columbia, pp. 43-44; establishment of permanent bench-marks for the topographical survey of the District of Columbia, pp. 44, 45; office work, p. 44.
FLOOR SPACE. Assigned to Coast and Geodetic Survey at Cincinnati Exposition, p. 95.
FLORIDA BAY. Hydrographic sheet, p. 51.
FLORIDA REEFS. Hydrographic surveys of approaches to the, p. 49-51.
FLYNN, MRS. S. E. Laborer, p. 146.
FORD, HARRY L. Service on steamer *Patterson*, p. 78.
FOREIGN STATIONS OCCUPIED FOR GRAVITY MEASURES. Number of, p. 111.
FORGE RIVER, LONG ISLAND, p. 35.
FORGE RIVER LIFE-SAVING STATION, p. 35.
FORNEY, STEHMAN, ASSISTANT. Tertiary triangulation and topography on the coast of California, from Cape San Martin westward, p. 66; office work, p. 66.
FORT BLISS, EL PASO, TEX. Magnetic station at, p. 60.
FORT CANBY LIFE-SAVING STATION, OREGON, p. 73.
FORT CRAIG, N. MEX. Magnetic observations at, p. 92.
FORT PICKENS-NAVY-YARD WHARF. Line in triangulation of Pensacola Bay, p. 54.
FORT PICKENS. Triangulation station, Pensacola Bay, p. 53.
FORT STANTON, D. C., pp. 42, 44.
FORT SUMTER 2. Triangulation station, S. C., p. 47.
FORT UNION, N. MEX. Magnetic observations at, p. 92.
FORT WORTH, TEX. Magnetic observations at, p. 60.
FOUST, W. H., ENSIGN, U. S. N. Service on steamer *Hassler*, p. 62; reference to, pp. 175, 176.
FOWLER, E. H. Drawing Division, pp. 127, 130, 131, 132.
FRANCISCAN MONKS. Mission founded by, in southern California, p. 62.
FRANKLIN (steamship). Wreck of, p. 35.
FRENCH, H. O. Chief carpenter. Reference to, pp. 97, 138, 140.
FRENCH, DR. WILLIAM B. Executive and accounting clerk, office of Assistant in Charge, pp. 99, 122, 123, 155.
FROSTAD. Triangulation station in Washington Territory, p. 75.
FUCA (steam launch). Use of, and reference to, p. 78.
FURNITURE AND OUTFITTING. Estimate for new, p. 16.

G.

GALLAGHER, CAPT. W. B., SUPERINTENDENT PHILADELPHIA AND READING STEAM COLLIERS. Acknowledgment of aid received from, p. 39.
GARDINER'S BAY, LONG ISLAND, p. 35.
GARRETT, L. M., ENSIGN, U. S. N. Service on schooner *Eagre*, p. 30; hydrographic surveys in Atchafalaya Bay and vicinity, coast of Louisiana, p. 59; reference to, pp. 162, 175, 176.
GASTINEAU CHANNEL, ALASKA, p. 80.
GAY HEAD, MASS., pp. 27, 31; topography in vicinity of, pp. 32-33.
GEDNEY (steamer). Use of, and reference to, pp. 21, 29, 72, 161, 162, 163, 165, 176, 177.
GENERAL CHARGE OF THE LAND WORK UPON THE PACIFIC COAST—ESTABLISHENT OF A MERIDIAN LINE AND A STANDARD OF LENGTH IN GOLDEN GATE PARK, SAN FRANCISCO—MAGNETIC AND TIDAL WORK, ETC., pp. 66-68.

GENERAL STATEMENT OF PROGRESS, in field work, pp. 2-4; office work, pp. 4, 5; discoveries and developments, pp. 5, 6; bulletins, p. 6; special scientific work, pp. 6-10.
GEODETIC LEVELING FROM NEAR CAIRO, ILL., ACROSS WESTERN KENTUCKY AND TENNESSEE, p. 83.
GEODETIC LEVELS NOS. 2 AND 3. Reference to, pp. 56, 86.
GEODETIC SCIENCE. Recognition given to demands of, in work of survey, p. 100.
GEODETIC WORK. Records and computations of, received, p. 150.
GEOGRAPHIC POSITIONS DETERMINED. Number of, p. 111.
GEORGIA. State of, included in Section V, p. 47.
GERHARDS, T. Instrument Division, p. 139.
GIBSON, J. T. Survey of District of Columbia, p. 43.
GILBERT, J. J., ASSISTANT. Triangulation and topography of the Gulf of Georgia, including Lummi, Birch, and Semi-ah-moo Bays, pp. 77, 78.
GLASCOCK, R. C., property clerk. Reference to, pp. 97, 140.
GOLDEN GATE PARK, SAN FRANCISCO. Establishment of meridian line and standard of length in, pp. 66, 67.
GOODFELLOW, EDWARD, ASSISTANT. Preparation for publication of annual reports and appendices thereto and editing of bulletins, p. 100; reference to, p. 84.
GOVE, C. A., LIEUTENANT, U. S. N. Service on steamer *Hassler*, p. 71; service on steamer *McArthur*, p. 75: reference to, pp. 175, 176.
GOVERNMENT INSANE ASYLUM, p. 42.
GOVERNNENT PRINTING OFFICE. Bench-mark at the, p. 44; reference to, p. 168.
GOVERNOR OF CALIFORNIA. Reference to, p. 68.
GRAND ISLAND, ALASKA, p. 79.
GRAND ISLE, LA. Base line at, reference to, p. 57.
GRAND SCHOODIC LAKE, ME. Reference to, p. 19.
GRANGER, F. D., ASSISTANT. Occupation of stations for extending the transcontinental triangulation near the thirty-ninth parallel to the westward, in Kansas, pp. 88, 89.; service in office of weights and measures, pp. 99, 159.
GRANTSVILLE, UTAH. Bench-mark at, p 91.
GRAVITY MEASURES. Statistics of, p. 111.
GRAY, EMMET. Tide observer at Sausalito, Cal., p. 70.
GRAY, J. H., SUBASSISTANT. Topographical survey of the north branch of Cobscook Bay, Maine, pp. 20-21; service on coast of Florida, p. 51.
GRAY'S FERRY AND THE DELAWARE RIVER. Hydrographic resurvey completed between, p. 39; topographical resurvey of shore line of Schuylkill River completed between, p. 39.
GREAT BAHAMA BANK AND CUBA. Current observations between, pp. 48, 49.
GREAT HARBOR, MASS., p. 33.
GREAT SALT LAKE, UTAH. Reference to, pp. 90, 91.
GREAT SOUTH BAY, LONG ISLAND, p. 35.
GREEN (Jennings Co.) Station in triangulation of Indiana, p. 85.
GREEN, F. R., MISCELLANEOUS DIVISION, pp. 98, 146.
GREENBURY'S POINT, MD. Site of base line selected at, p. 40; reference to p. 41.
GREENFIELD, TENN. Leveling operations suspended at, p. 86.
GULF OF GEORGIA. Triangulation and topography of, pp. 77, 78.
GULF OF MAINE. Reference to hydrographic examinations in, p. 22.
GULF OF MEXICO. Triangulation in Alabama carried towards the, p. 55.
GULF STREAM. Temperature of water in the, pp. 22-23; explorations in the, pp. 48-49.
GULF STREAM EXPLORATIONS, OBSERVATIONS OF CURRENTS, 1888 and 1889. Appendix No. 16. pp. 467-477.

## H.

HACKETT'S POINT, p. 40.
HALE'S PASSAGE, WASHINGTON TERRITORY, p. 77.
HALIFAX TOWNSHIP, MASS., p. 25.
HALPINE, N. J. L. T., ENSIGN, U. S. N., p. 175.
HALSEY, D. P. Service in Pennsylvania, p. 37.
HALTER, R. E., ASSISTANT, p. 60; magnetic record continued, and absolute values of the magnetic elements determined monthly at the self-registering magnetic station at Los Angeles, Cal., pp. 65, 66.
HAMILTON ROAD, D. C., p. 42.
HANDBURG, MAJOR T. H. Reference to assistance received from, p. 73.
HANOVER TOWNSHIP, MASS., p. 25.
HARBOR COMMISSION OF PHILADELPHIA. Reference to, p. 99.
HARDING'S BEACH, MASS., p. 23.
HANSON TOWNSHIP, MASS., p. 25.
HARMONIC REDUCTION OF TIDAL OBSERVATIONS. Reference to, p. 141.
HARRISON, MRS. VIRGINIA. Tidal Division, p. 142.
HARVEY. Triangulation station in Tennessee, p. 83.
HARVEY, R. M. Office of Assistant in Charge, pp. 99, 123.
HASKELL, E. E. Services in physical hydrography, pp. 23 25.
HASSLER (steamer). Use of, and reference to, pp. 61, 63, 64, 70, 71, 163, 176, 177.
HASSON, A. R. Services on schooner *Eagre* p. 30.
HAWLEY, W. C. Services in Massachusetts, p. 26.
HAYFORD, JOHN F. Tidal Division, p. 142.
HEIGHTS OF PERMANENT BENCH-MARKS DETERMINED BY SPIRIT LEVELING. Number of, p. 111.
HELM, J. M., LIEUTENANT, U. S. N., ASSISTANT. Completion of the hydrography of Cobscook Bay, Maine, p. 21; hydrographic resurveys in Nantucket Sound, p, 29; hydrographic survey from Cape Orford and vicinity to the southward, p. 72; reference to, pp. 161, 163. 175, 176.
HELENA, MONT., AND SPOKANE FALLS, WASH. Difference of longitude determined, p. 74.
HELENA, MONT., AND WALLA WALLA, WASH. Difference of longitude determined, p. 92.
HENRY, N. G. Pay yeoman on steamer *Blake*, pp. 46, 49.
HERGESHEIMER, E., ASSISTANT. In charge of Drawing Division, pp. 96, 123, 127; reference to death of, pp. 96, 123.
HERGESHEIMER, JOSEPH, ASSISTANT. Hydrographic examination of the entrance into Jamaica Bay, south side of Long Island, pp. 35, 36; topographic and hydrographic resurvey of the Schuylkill River, from Fairmount Dam to the Delaware River, pp. 38, 39; topographical survey of the west coast of Florida between Cape Sable and Pavilion Key, p. 51.
HIGHEST SIGNAL. Built by survey (Green triangulation station, Indiana), p. 85.
HIGH HEAD, MASS., p. 24.
HIGH POINT. Triangulation station in Georgia, p. 83.
HILDRETH, D. M. Drawing Division, pp. 128, 130.
HILL, T. K., ENSIGN, U. S. N. Service on steamer *McArthur*, p. 75; service on schooner *Earnest*, p. 77; reference to, pp. 175, 176.
HINDMARSH, W. H. Survey of District of Columbia, p. 43.
HITCHCOCK (steamer). Use of and reference to, pp. 57, 177.
HOAG, PROF. W. R., ACTING ASSISTANT. Measurement of a base line in connection with geodetic operations in the State of Minnesota, p. 87.
HODGKINS, W. C., ASSISTANT. Continuation of the detailed topographical survey of the District of Columbia, pp. 42, 43.
HOLDEN, PROF. E. S., DIRECTOR LICK OBSERVATORY. Aid rendered by, in telegraphic longitude work, p. 68.
HOLKAM BAY, ALASKA, p. 80.
HOME STATIONS OCCUPIED FOR GRAVITY MEASURES. Number of, p. 111.
HONDURAS. Reference to, p. 49.
HOOPER, UTAH. Bench mark at, p. 91.
HOOVER, D. C. Printing room, p. 135.
HORSESHOE SHOAL. Entrance to Chesapeake Bay, p. 46.
HOSPITAL COVE, ANGEL ISLAND, SAN FRANCISCO BAY. Examination of, for location of quarantine station, pp. 69, 70.
HUGHES, R. M., ENSIGN, U. S. N. Service on steamer *Blake*, pp. 46, 49; reference to, pp. 175, 176.
HULME, W. O., ENSIGN, U. S. N., p. 175.
HURLBURT, S. R., ENSIGN, U. S. N. Service on steamer *Hassler*, p. 71.
HYANNIS PORT, MASS., p. 29.
HYDROGRAPHIC CHARTS, ORIGINALS. Statistics of, p. 112.
HYDROGRAPHIC DIVISION, COAST AND GEODETIC SURVEY OFFICE. Notice of work of, pp. 165, 166; annual report of, pp. 167, 173; statistics of work in, p. 167; miscellaneous draughting done in, pp. 172, 173.
HYDROGRAPHIC EXAMINATION OF HOSPITAL COVE, ANGEL ISLAND, SAN FRANCISCO BAY, pp. 69, 70.

HYDROGRAPHIC EXAMINATION OF THE ENTRANCE INTO JAMAICA BAY, SOUTH SIDE OF LONG ISLAND, pp. 35, 36.

HYDROGRAPHIC EXAMINATIONS. On coasts of Maine and Massachusetts, pp. 22, 23; in Nantucket Sound, p. 32; of entrance to Jamaica Bay, Long Island, pp. 35, 36; for reported shoal off Point Firmin, coast of California, p. 63; of Hospital Cove, Angel Island, San Francisco Bay, pp. 69, 70; in Columbia River, Oregon, pp. 72, 73.

HYDROGRAPHIC EXAMINATIONS ON THE COAST OF MAINE IN THE VICINITY OF NASH ROCK, AND BETWEEN MATINICUS ROCK AND SEGUIN ISLAND; ALSO, OFF THE COAST OF MASSACHUSETTS FROM NANTUCKET SHOALS TO THE EASTERN LIMIT OF GEORGE'S BANK, pp. 22, 23.

HYDROGRAPHIC INSPECTOR. Annual report of the, pp. 161-177; reference to, pp. 96, 123.

HYDROGRAPHIC RESURVEY OF ANNAPOLIS HARBOR AND APPROACHES, p. 41.

HYDROGRAPHIC RESURVEY OF THE APPROACHES TO MARTHA'S VINEYARD AND NANTUCKET, AND RESURVEY OF MUSKEGET CHANNEL, pp. 30-32.

HYDROGRAPHIC RESURVEYS AND EXAMINATION IN NANTUCKET SOUND, p. 32.

HYDROGRAPHIC RESURVEYS AND EXAMINATIONS IN THE VICINITY OF CAPE CHARLES, VIRGINIA, pp. 45-46.

HYDROGRAPHIC RESURVEYS IN NANTUCKET AND VINEYARD SOUNDS, pp. 29-30.

HYDROGRAPHIC SHEETS. Coast of Florida, pp. 51, 53; of Annapolis Harbor resurvey, p. 41; of Escambia Bay, Florida, p. 158; of coast of California, p. 61; of coast of Oregon, p. 72, 73; of coast of Washington Territory, p. 75; of Cobscook Bay, Maine, p. 21; of Nantucket and Vineyard Sounds, pp. 29, 30; of Portland Canal and vicinity, p. 81; of Stephens Passage and vicinity, Alaska, p. 79; of work on coasts of Maine and Massachusetts by steamer *Blake*, p. 23; of vicinity of Cape Charles, Va., p. 45; vicinity of Cape Cod, Mass., p. 24; plotted, verified, and inked, list of, pp. 169-170; received and registered, list of, pp. 152-153.

HYDROGRAPHIC SOUNDINGS AND ANGLES, DUPLICATE RECORDS. Number of volumes, p. 112.

HYDROGRAPHIC SOUNDINGS AND ANGLES, ORIGINAL RECORDS. Number of volumes, p. 112.

HYDROGRAPHIC SURVEY FROM CAPE ORFORD AND VICINITY TO THE SOUTHWARD, p. 72.

HYDROGRAPHIC SURVEY ON THE COAST OF CALIFORNIA FROM OFF THE EASTERN END OF SAN ONOFRE MOUNTAIN TO NEWPORT LANDING, AND HYDROGRAPHIC EXAMINATION FOR A SHOAL REPORTED OFF POINT FIRMIN, pp. 63-64.

HYDROGRAPHIC SURVEYS AND RESURVEYS. Of Cobscook Bay, Maine, p. 21; in Nantucket Sound and Vineyard Sound, pp. 29, 30, 32; of approaches to Martha's Vineyard, and Nantucket and Muskeget Channel, pp. 30-32; of Delaware River, p. 38; of Schuylkill River, pp. 38, 39; of Annapolis Harbor and approaches, p. 41; of Potomac River for additions to the charts, p. 45; in vicinity of Cape Charles, Virginia, pp. 45, 46; in connection with survey of oyster beds, North Carolina, pp. 46, 47; in the Bay of Florida, in the approaches to the Florida Reefs, and on the Northwest Channel Bar, Key West, pp. 49-51; between Cedar Keys and Light-house Point, west coast of Florida, pp. 52, 53; of Pensacola Bay and its branches, Florida, pp. 54, 55; in Atchafalaya Bay and vicinity, coast of Louisiana, p. 59; on coast of California from San Diego to Oceanside and vicinity, p. 61; on coast of California from off the eastern end of San Onofre Mountain to Newport Landing, pp. 63-64; in vicinity of Crescent City, Cal., pp. 70, 71; from Cape Orford and vicinity to the southward, p. 72; of Columbia River, Oregon, pp. 72, 73; in vicinity of Cape Flattery and in Neeah Bay, Washington Territory, pp. 74-75; on inland waters of Washington Territory, pp. 75-77; in Stephens and Cleveland Passages and vicinity, and in Portland Canal and vicinity, southeastern Alaska, pp. 78-82; in Escambia Bay, Florida, p. 93; in Port Orchard, Washington Territory, pp. 93, 94.

HYDROGRAPHIC SURVEYS IN ATCHAFALAYA BAY AND VICINITY, COAST OF LOUISIANA, p. 59.

HYDROGRAPHIC SURVEYS, INCLUDING SARATOGA PASSAGE TO SKAGIT BAY, THE NORTHWEST COAST OF WHIDBEY ISLAND, ROSARIO STRAIT, AND BELLINGHAM BAY, pp. 76, 77.

HYDROGRAPHIC SURVEYS IN STEPHENS AND IN CLEVELAND PASSAGES AND VICINITY, AND IN PORTLAND CANAL AND VICINITY, SOUTHEASTERN ALASKA, pp. 78-82.

HYDROGRAPHIC SURVEYS IN THE BAY OF FLORIDA, IN THE APPROACHES TO THE FLORIDA REEFS, AND ON THE NORTHWEST CHANNEL BAR, KEY WEST, pp. 49-51.

HYDROGRAPHIC SURVEYS IN THE VICINITY OF CAPE FLATTERY AND IN NEAH BAY, WASHINGTON TERRITORY, pp. 74, 75.

HYDROGRAPHIC SURVEYS IN THE VICINITY OF CRESCENT CITY, CAL., pp. 70, 71.

HYDROGRAPHIC SURVEYS ON THE COAST OF CALIFORNIA FROM SAN DIEGO TO OCEANSIDE AND VICINITY, pp. 61, 62.

HYDROGRAPHIC WORK. Records of, received, p. 151.

HYDROGRAPHY. Statistics of, p. 112; verification, revision, and correction of reduced drawings for, pp. 171, 172.

## I.

IARDELLA, C. T., ASSISTANT. Completion of the shore-line resurveys of Three-Mile Harbor, Moriches Bay, and the outer beach, Long Island, p. 35; reference to, p. 27.

IBAPAH. Triangulation station in Utah, p. 91.

ICE. The formation, lodgement, and movement of, in Delaware River and Bay observed, p. 39.

IDAHO. State of, included in Section XVII, p. 92.

ILIULIUK, ALASKA, p. 95.

ILIULIUK HARBOR, UNALASKA ISLAND, ALASKA, p. 83.

ILLINOIS. State of, included in Section XIV, p. 84.

ILLINOIS CENTRAL R. R. Aid received from officials of, p. 86.

INCREASED AMOUNT OF WORK IN COAST AND GEODETIC SURVEY OFFICE, p. 121.

INCREASED DEMAND FOR COAST AND GEODETIC SURVEY CHARTS AND PUBLICATIONS. Reference to, pp. 95, 98, 121, 143.

INCREASE IN OFFICE FORCE. Rendered necessary by increased demand for charts, p. 95.

INDIANA. State of, included in Section XIV, p. 84.

INDIAN HILL. Triangulation station in Massachusetts, p. 29, p. 32.

INDIAN TERRITORY. Included in Section IX, p. 60.

INFORMATION FURNISHED TO DEPARTMENTS OF THE GOVERNMENT IN REPLY TO SPECIAL REQUESTS, AND TO INDIVIDUALS UPON APPLICATION, DURING THE FISCAL YEAR ENDING JUNE 30, 1889. Appendix No. 3, pp. 115-119.

INFORMATION FURNISHED TO GOVERNMENT OFFICERS OR ORGANIZATIONS BY PHILADELPHIA SUBOFFICE. Reference to, p. 99.

INGRAM, A. P., SUPERINTENDENT PHILADELPHIA MARITIME EXCHANGE. Observations of ice movement in Delaware River, p. 39.

INNER MIDDLE GROUND, near Cape Charles, Va., p. 45.

INSTRUMENT DIVISION. Annual report of, pp. 138-140; reference to, p. 97.

INSTRUMENTS MADE OR PARTLY MADE DURING THE YEAR, AND OLD INSTRUMENTS REMODELED. List of, p. 138.

INTERNATIONAL COMMITTEE ON WEIGHTS AND MEASURES. Reference to, p. 100.

INTERNATIONAL GEODETIC ASSOCIATION. Assistant George Davidson appointed a delegate to, p. 68; estimate for contribution to, p. 13; reference to, p. 100; report of George Davidson, assistant U. S. Coast and Geodetic Survey, appointed by the President of the United States as the delegate to the ninth conference of the, held at Paris, October, 1889. Appendix No. 18, pp. 493-503.

INTERNATIONAL PROTOTYPE METRE AND THE COMMITTEE METRE. No material difference in length of, p. 160.

IOWA. State of, included in Section XV, p. 87.

ISHERWOOD, D. C., p. 43.

ISOGONIC MAP OF THE UNITED STATES. Preparation of, p. 96.

## J.

JACKSON, M. P. Drawing Division, pp. 128, 131.

JACKSON, TENN., p. 86.

JAMAICA BAY, LONG ISLAND. Extension southward of sand banks on west side of, p. 35.

JAMISON. Triangulation station in Alabama, p. 55.
JENKINS, F. W., ENSIGN U. S. N. Service on steamer *Gedney*, p. 72; reference to, pp. 175, 176.
JOHNSON, ATLEE. Survey of District of Columbia, p. 44.
JONES CHAPEL CHURCH, D. C., p. 43.
JONES, CHARLES H. Packer and folder, p. 146.
JONES, GEORGE R. Service on steamer *Bache*, p. 31; service on steamer *Bache* and schooner *Spy*, pp. 50, 53.
JORDAN, J. N., LIEUTENANT U. S. N., ASSISTANT. Assigned to command of schooner *Earnest*, p. 77; hydrographic work on coast of Washington Territory, p. 77; reference to, pp. 164, 175, 176.
JUNCTION CITY, KANS. Magnetic observations at, p. 88.
JUNEAU, ALASKA, pp. 79, 80.
JUNKEN, CHARLES. Preparation of data for map of Alaska, p. 100.

K.

KANSAS. State of, included in Section XV, p. 87.
KEARNEY, S. Instrument Division, p. 140.
KEITH, W. H. Watchman, p. 146.
KELLEY. Triangulation station in Massachusetts, p. 25.
KENSINGTON WATERWORKS, p. 38.
KENT ISLAND BASE. Reference to, p. 40.
KENTUCKY. State of, included in Section XIII., p. 83.
KEOKUK, IOWA. Magnetic observations at, p. 88.
KEYSER, L. P. Electrotyping Division, p. 135.
KEY WEST, NORTHWEST CHANNEL BAR. Surveys on the, pp. 49-51.
KIDWELL MEADOWS, D. C. Reference to, p. 96.
KIMMELL, HARRY, ENSIGN U. S. N. Service on steamer *Blake*, pp. 46, 49. Reference to, pp. 175, 176.
KING, IRVING. Services on schooner *Eagre*, p. 30.
KING'S HILL. Triangulation station in Massachusetts, p. 25.
KINGSTON TOWNSHIP, MASS., p. 25.
KIOGA, STATION 2. Delaware River survey, p. 38.
KLAMATH RIVER, p. 70.
KNIGHT, H. M. Engraving Division, pp. 134, 136, 137.
KNIGHT, H. T. Engraving Division, pp. 134, 136, 137.
KNIGHT'S KEY. Tide rips to westward of, p. 50.
KNIGHT'S KEY CHANNEL AND SPANISH KEY CHANNEL. Included in hydrographic surveys, p. 50.
KOOS BAY, OREGON, p. 71.
KOOS BAY AND THE UMPQUAH RIVER. Completion of coast topography between, pp. 71, 72.
KUBEL, E. A. Engraving Division, p. 134.
KUMMELL, CHARLES H. Computing Division, p. 125.

L.

LAFAYETTE PARK STATION, SAN FRANCISCO, CAL. Reference to longitude determination at, p. 67.
LAKE SURVEY. Stations of the, near Lake Michigan, p. 86; reference to, p. 98.
LAKE SURVEY STANDARD METRE. Reference to, p. 160.
LA JOLLA, CAL., p. 61.
LAND AND STANWOOD. Triangulation stations in Washington Territory, p. 75.
LANDMARKS. For Columbia River entrance, p. 73.
LANMAN, W. H. Accounting Division, pp. 98, 157, 158.
LAS BOLSAS RIDGE, CAL., p. 67.
LATIMER, MR., p. 46.
LATIMER'S SHOAL. Entrance to Chesapeake Bay, p. 46.
LATITUDE. Determination of at West Base, on coast of Louisiana, pp. 57, 58; determination of, at ends of base line in Stephens Passage, Alaska, p. 79.
LATITUDE AND AZIMUTH. Determined at "Ogden Peak," Utah, pp. 90, 91; observed at "Adams" triangulation station in Kansas, p. 88.
LATITUDE STATIONS. Number of, p. 111.
LAUXMAN, M. Instrument Division, p. 140.
LAWN, MISS KATE. Office of Assistant in Charge, pp. 99, 123.
LAWSON, J. S., ASSISTANT, p. 60; measurement of the Los Angeles primary base line, pp. 64, 65; establishment of meridian line, Golden Gate Park, p. 67.
LENGTH OF GENERAL COAST SURVEYED, p. 111.
LENGTH OF ROADS SURVEYED, p. 112.
LENGTH OF SHORE LINE SURVEYED, including rivers, creeks, and ponds, p. 112.
LENGTH OF SNELLING AVENUE BASE LINE, p. 87.
LEONARD, S. H., ASSISTANT ENGINEER, U. S. N. Service on steamer *Bache*, p. 31; service on steamer *Bache* and schooner *Spy*, pp. 50, 53; reference to, pp. 175, 176.
LETTER FROM THE ACTING SECRETARY OF THE TREASURY TO THE SPEAKER OF THE HOUSE OF REPRESENTATIVES, TRANSMITTING THE REPORT OF THE SUPERINTENDENT OF THE COAST AND GEODETIC SURVEY FOR THE FISCAL YEAR ENDED JUNE 30, 1889, p. iii.
LETTERS WRITTEN IN COAST AND GEODETIC SURVEY OFFICE. Number of, p. 121.
LEVELING. Between tide-gauge and bench-marks: At St. Paul, Kadiak Island, Alaska, pp. 82, 83; (geodetic), from Cairo, Ill., towards the Gulf of Mexico, pp. 85, 86; (geodetic), in Kentucky and Tennessee, p. 83; in connection with Physical Hydrography of Cape Cod, Mass., p. 23; in connection with the survey of the District of Columbia, p. 44; in connection with tide observations at Sandy Hook, N. J., p. 37; in Massachusetts, p. 25; on Martha's Vineyard, Mass., p. 32; to connect bench-marks at Ogden Observatory and Huntsville, Utah, with railway levels at Ogden, p. 90; to connect bench-marks near Great Salt Lake with railway levels at Ogden, Utah, p. 91; to determine elevation of Snelling Avenue Base, p. 87.
LEWIS AND CLARKE RIVER, OREGON, p. 72.
LEWIS, D. O. PASSED ASSISTANT SURGEON U. S. N., p. 175.
LICK OBSERVATORY, MOUNT HAMILTON, CAL. Geographical position determined, p. 68.
LIEUTENANTS, U. S. N. Number of, attached to Coast and Geodetic Survey, p. 175.
LIEUTENANTS (JUNIOR GRADE), U. S. N. Number of, attached to Coast and Geodetic Survey, p. 175.
LIEUTENANT-COMMANDERS, U. S. N. Number of, attached to Coast and Geodetic Survey, p. 175.
LIGHT-HOUSES. At Fort Sumter, S. C., reference to, p. 47; at Gay Head, Mass., pp. 28, 32; at Point Judith, Whale Rock, Conanicut Island, Gull Rocks, Rose Island, Goat Island, Lime Rock, and Wickford Light on Old Gay Rock, Wickford Harbor, geographical positions of, determined, p. 34.
LIGHT-HOUSE BOARD, pp. 30, 47, 68.
LIGHT-HOUSE POINT, LA., Change in shore line at, p. 58.
LIMESTONE INLET, ALASKA, p. 79.
LINES OF GEODETIC LEVELING CARRIED FROM NEAR CAIRO, ILL., TOWARDS THE GULF OF MEXICO, pp. 85-86.
LINES OF SPIRIT-LEVELING. Length of, p. 111.
LINDENKOHL, A. Drawing Division, pp. 127, 128, 130, 131, 132.
LINDENKOHL, H. Drawing Division, pp. 127, 128, 130, 131, 132.
LIST OF NAVAL OFFICERS ATTACHED TO THE COAST AND GEODETIC SURVEY DURING THE FISCAL YEAR ENDING JUNE 30, 1889, p. 175.
LIST OF NAVAL OFFICERS ATTACHED TO THE COAST AND GEODETIC SURVEY, JUNE 30, 1889, p. 176.
LITTLE, F. M. Computing Division, pp. 124, 126; Tidal Division, p. 142.
LITTLE ROCK, ARK. Extension of line of levels from, p. 56.
LITTLE ROCK AND ARKANSAS CITY, ARK. Connection of, by line of precise levels, p. 56.
LLOYD, EDWARD, ENSIGN, U. S. N. Service on steamer *Endeavor*, pp. 41, 46; reference to, p. 175.
LOCATION OF WHARVES in the Potomac River for additions to the charts, p. 45.
LONDON, POPE COUNTY, ARK., p. 56.
LONG, W. M. Janitor, p. 146.
LONG ISLAND. Resurveys, p. 26.
LONG KEY AND COUCH KEY. Tide rips between p. 50.
LONG NECK, MASS., p. 33.
LONGITUDE. Determination of, at Cape Fanshaw, Alaska, p. 79.
LONGITUDE STATIONS. At Ogden and Salt Lake City connected with main triangulation, p. 91.
LONGITUDE STATIONS (TELEGRAPHIC). Number of, p. 111.
LOS ANGELES, CAL., pp. 60, 63; longitude and magnetic elements determined at, p. 69; magnetic observations at, pp. 65-66.
LOS ANGELES AND NEEDLES. Difference of longitude determined, p. 67.
LOS ANGELES AND SAN FRANCISCO, CAL. Difference of longitude determined, p. 69.
LOS ANGELES BASE LINE. Los Angeles and Orange Counties, Cal. Appendix No. 10, pp. 217-231; reference to, pp. 63, 64, 65.
LOS ANGELES COUNTY, CAL., p. 64.

LOST. Triangulation station in Louisiana, p. 58.
LOUISIANA, State of. Included in Section VIII, p. 55.
LOWELL. Triangulation station in Wisconsin, p. 86.
LUBY, J. F., ENSIGN, U. S. N. Service on steamer *Endeavor*, p. 59; reference to, pp. 175, 176.
LUBEC, ME. Reference to, p. 22.
LUCIA ISLAND, WASHINGTON TERRITORY, p. 77.
LUMMI BAY, WASHINGTON TERRITORY, pp. 77, 78.
LYLE, E. C. Services in Section I, p. 19.

M.

MACHIAS, ME. Reference to, p. 22.
MADISON, WIS. Magnetic observations at University Farm station, p. 84.
MAEDEL, E. A. Engraving Division, p. 136.
MAGNETIC DECLINATION. The distribution of the, in the United States for the epoch 1890. Appendix No. 11, pp. 233–402.
MAGNETIC OBSERVATIONS. At a station in Louisiana, p. 56; at Mount Hamilton, Cal., p. 68; at Nashville, Tenn., p. 84; at "Ogden Peak," Utah, pp. 90, 91; at Pearse Island, Portland Canal, p. 81; at Point Arena, Cal., p. 69; at Sacramento, Cal., p. 68; at San Francisco, pp. 66, 67; at Seattle and Port Townsend, Wash., p. 73; at stations in Iowa, Nebraska, and Kansas, p. 88; in Colorado and New Mexico, p. 92; in Ohio, Indiana, Illinois, and Wisconsin, p. 84; in Texas and Indian Territory, p. 60.
MAGNETIC OBSERVATIONS. Original records. Number of cahiers, p. 112.
MAGNETIC OBSERVATIONS. Original records. Number of volumes, p. 112.
MAGNETIC PARTIES. Number of, p. 111.
MAGNETIC RECORD CONTINUED, AND ABSOLUTE VALUES OF THE MAGNETIC ELEMENTS DETERMINED MONTHLY AT THE SELF-REGISTERING MAGNETIC STATION AT LOS ANGELES, CAL., pp. 65–66.
MAGNETIC STATION. At Shreveport, La., p. 56.
MAGNETIC STATIONS OCCUPIED. Number of, p. 111.
MAGNETIC WORK. Records and computations of, received, p. 150.
MAGNETIC WORK, SAN FRANCISCO, p. 67; statistics of, p. 111.
MAGNOLIA BLUFF, ESCAMBIA BAY, FLA., p. 93.
MAGOTHY BAY AND FISHERMAN'S INLET. Included in resurvey, p. 46.
MAHAN, A. T., CAPTAIN, U. S. N. Member of Navy-yard Site Commission, Pacific coast, p. 93.
MAHAN, D. H., LIEUTENANT, U. S. N. Service on steamer *Hassler*, pp. 62, 163, 164; reference to, pp. 175, 176.
MAHON, C. Drawing Division, pp. 127, 130, 131, 132.
MAINE. State of, included in Section I, p. 19.
MAIN SHIP CHANNEL, KEY WEST. Discovery of a rock in, p. 52.
MANATEE, FLA., p. 51.
MANOMET HILLS, MASSACHUSETTS, p. 27.
MANSFIELD, H. B., LIEUTENANT U. S. N., ASSISTANT. Hydrographic surveys on the coast of California from San Diego to Oceanside and vicinity, pp. 61–62; hydrographic surveys in the vicinity of Crescent City, Cal., pp. 70–71; assigned to command of steamer *Patterson*, p. 82; reference to, pp. 163, 165, 175, 176.
MANSFIELD CONE. Triangulation station in California, p. 66.
MAPES, MISS L. A. Chart Division, p. 147.
MAPS AND CHARTS. Production of new, p. 122; statistics of, p. 112.
MAPS OF GENERAL PROGRESS, ACCOMPANYING REPORT. Reference to, p. 1.
MARINDIN, H. L., ASSISTANT. Physical hydrography; continuation of the survey of the coast of Cape Cod Peninsula from the vicinity of Chatham to the northward, pp. 22–25; office work, p. 24; reference to, p. 99. Reports by, Appendix No. 12, pp. 403–407, and Appendix No. 13, pp. 409–457.
MARINE HOSPITAL GROUNDS, CLEVELAND, OHIO. Magnetic station in, p. 84.
MARKET SQUARE BASIN, ANNAPOLIS, MD. Tide observations at, p. 41.
MARR, R. A., SUBASSISTANT. Longitude determinations in California and Nevada, p. 68; longitude determinations in Washington Territory and Montana, pp. 73–74; longitude work in Nevada, p. 92; longitude work in Montana, pp. 92, 93; reference to work by, in Appendix No. 8, pp. 209–212; reference to, p. 27.
MARSHFIELD TOWNSHIP, MASS., p. 25.
MARTIN, ARTEMAS. Librarian, pp. 98, 121, 154.
MARYLAND, State of, included in Section III, p. 40.
MARYSVILLE, CAL. Longitude and magnetic elements determined, p. 69.
MASHPEE TOWNSHIP, MASS., p. 25.
MASSACHUSETTS. State of, included in Section I, p. 19.
MATCHLESS (schooner). Use of, and reference to, pp. 176, 177.
MATIA ISLAND, WASHINGTON TERRITORY, p. 77.
MATINICUS ROCK AND SEGUIN ISLAND. Hydrography between, pp. 22, 23.
MAUPIN, WILLIAM C. Computing Division, p. 127.
MAYO, H. T., LIEUTENANT U. S. N., ASSISTANT. Hydrographic surveys, including Saratoga Passage to Skagit Bay, the northwest coast of Whidbey Island, Rosario Strait, and Bellingham Bay, pp. 76, 77. Reference to p. 164.
McARTHUR, (steamer). Use of and reference to, pp. 74, 75, 164, 165, 176, 177.
McCANN, W. P., COMMODORE, U. S. N. Member Navy-yard Commission. Atlantic coast p. 93.
McCORKLE, S. C., ASSISTANT. In charge of suboffice at Philadelphia, p. 99. Member of Commission advisory to Harbor Commission of Philadelphia, p. 99.
McDONALD, JOHN, ENSIGN, U. S. N. Service on steamer *Patterson*, p. 78. Reference to, pp. 175, 176.
McGRATH, J. E. SUBASSISTANT, p. 56; service in southern California, p. 63; reference to, pp. 67, 70; preliminary survey of the frontier line between Alaska and British Columbia, p. 83; organization of parties to make a preliminary determination of the boundary line between Alaska and British Columbia, pp. 94, 95.
McGUINNESS, J. P., ENSIGN, U. S. N. Service on steamer *Hassler*, pp. 62, 71; service on steamer *McArthur*, p. 75; reference to, pp. 175, 176.
McHENRY, JOHN. Service on steamer *Patterson*, p. 78.
McLANE, W. R. Driver, p. 146.
MEAN RISE AND FALL OF TIDES. At Taku Harbor, Alaska, p. 79.
MEASUREMENT OF BASE LINE IN CONNECTION WITH GEODETIC OPERATIONS IN THE STATE OF MINNESOTA, p. 87.
MEASUREMENT OF BASE AND VERIFICATION OF TRIANGULATION ON THE COAST OF LOUISIANA, pp. 57, 58.
MEASUREMENT OF THE LOS ANGELES PRIMARY BASE, pp. 64, 65.
MELVILLE, CAPT. H. E., SUPERINTENDENT OF THE CITY ICE BOATS, PHILADELPHIA. Acknowledgment of aid received from, p. 39.
MEMPHIS, TENN., p. 86.
MEN. Number of attached to vessels of the Survey, p. 177.
MENDENHALL, T. C., SUPERINTENDENT OF THE COAST AND GEODETIC SURVEY. Submits annual report to Secretary of the Treasury, p. 1; appointment as Superintendent, p. 1; reference to in letter from Secretary of the Treasury transmitting report to Congress, p. iii; concluding statement by, p. 100.
MENEMSHA BIGHT, p. 32.
MERIDIAN LINE. Established at Salt Lake City, p. 91.
MERIDIAN LINE AND STANDARD OF LENGTH. Established at Golden Gate Park, San Francisco, pp. 66, 67.
MERIDIAN LINES AND STANDARDS OF MEASURE. Advantage of establishment of at principal county seats in the United States, suggested, p. 37.
MERIDIAN LINES. Established at Binghamton, N. Y., and Montrose, Pa., pp. 36, 37.
METHOD OF ACCURATE TOPOGRAPHICAL WORK used in survey of District of Columbia, p. 42.
METHOD OF PRECISE LEVELING, p. 56.
METRIC STANDARDS OF LENGTH of the U. S. Coast and Geodetic Survey and U. S. Lake Survey. Relation between. Appendix No. 6, pp. 179, 197.
MEYER. Triangulation station in Kansas, p. 89.
MICHIGAN. State of, included in Section XIV, p. 84.
MIDDLEBOROUGH, MASS. Line of levels extended to, p. 25.
MILES RUN ADDITIONAL OF OUTSIDE OR DEEP-SEA SOUNDINGS, p. 112.
MILES, W. P. Service at Los Angeles, p. 66.
MILKHOUSE FORD ROAD, D. C., p. 42.
MILWAUKEE, WIS. Magnetic observations at North Point lighthouse, p. 84.

MINEOLA, WOOD COUNTY, TEX. Magnetic observations at, p. 60.
MINNESOTA. State of, included in Section XV, p. 87.
MISCELLANEOUS DIVISION. Annual report of, p. 143; statistics of work in, p. 143; reference to, pp. 97, 98.
MISCELLANEOUS DRAUGHTING. Done in Hydrographic Division. Tabular statement of, pp. 172, 173.
MISSISSIPPI. State of, included in Section VIII, p. 55.
MISSISSIPPI RIVER. Reference to, p. 86.
MISSISSIPPI RIVER AND THE ROCKY MOUNTAINS. Occupation of magnetic stations between, p. 84.
MISSISSIPPI RIVER COMMISSION. Secretary of the, p. 86.
MISSOURI. State of, included in Section XV, p. 87.
MOBILE BAY. Reference to, p. 51.
MOLASKA HILL, MASSACHUSETTS, p. 27.
MOLKOW, E. Drawing Division, pp. 127, 130, 131, 132.
MONA, ANEGADA, AND WINDWARD ISLAND PASSAGES. Current observations in, pp. 48, 49.
MONK'S HILL. Triangulation station in Massachusetts, p. 26.
MONTANA. State of, included in Section XVII, p. 92.
MONTAUK POINT, p. 26.
MONTGOMERY, ALA., p. 55.
MONTHLY NOTICES TO MARINERS. Reference to, p. 168; supplied to collectors of customs and United States consulates, p. 168.
MOORE, FRANK. Foreman in charge of plate printing, Coast and Geodetic Survey Office, pp. 97, 135.
MORGAN, W. B., late disbursing agent Coast and Geodetic Survey. Reference to, pp. 95, 155; settlement of accounts of, p. 122.
MORGAN CITY, LA., p. 57.
MORICHES BAY, LONG ISLAND, p. 35.
MORSE, FREMONT, SUBASSISTANT. Service in California, pp. 64, 65; establishment of meridian line, Golden Gate Park, p. 67; magnetic observations, San Francisco, p. 67; reference to, p. 70.
MOSER, J. F., LIEUT., U. S. N., ASSISTANT. Hydrographic resurvey of the approaches to Martha's Vineyard and Nantucket, and resurvey of Muskeget Channel, pp. 30–32; Hydrographic surveys in the Bay of Florida, in the approaches to the Florida reefs, and on the northwest channel bar, Key West, pp. 49–51; offshore hydrographic survey between Cedar Keys and Light-House Point, west coast of Florida, pp. 52, 53; reference to, pp. 161, 175, 176.
MOSMAN, A. T., ASSISTANT. Determination of the geographical positions of light-houses in Narragansett Bay and approaches: identification of a station of the old triangulation at Amesbury, Mass., p. 34; triangulation of Perdido Bay and its connection with the triangulation of Pensacola Bay, Fla., pp. 53, 54; reference to, p. 84; service in office of weights and measures, pp. 99, 159.
MOSS SPRINGS, KANS., p. 89.
MOUNT HENRY. Triangulation station in Maine, p. 19.
MOUNT PLEASANT LIGHT. Triangulation station in S. C., p. 47.
MOUNT DESERET. Triangulation station in Utah. Elevation determined trigonometrically with reference to railroad levels at Ogden, p. 91.
MOUNT HAMILTON, CALIFORNIA. Telegraphic determination of the longitude of a station on, and its trigonometrical connection with the Lick Observatory. Appendix No. 8, pp. 209–212.
MOUNT ST. ELIAS. Reference to, p. 67.
MURAI STANDARD. Reference to, p. 160.
MURRAY, HARRISON. Fireman, p. 146.
MUSKEGET CHANNEL. Hydrographic resurvey of, pp. 29, 30; additional buoys recommended, p. 31.
MUSKEGET ENTRANCE, p. 31.
MUTTON SHOAL, p. 31.

N.

NAMES OF VESSELS, THEIR TONNAGE, ETC., IN THE SERVICE OF THE COAST AND GEODETIC SURVEY DURING THE FISCAL YEAR ENDING JUNE 30, 1889, p. 177.
NANTUCKET HARBOR, MASSACHUSETTS, p. 30.
NANTUCKET SHOALS AND GEORGE'S BANK. Hydrography between, p. 23.
NARRAGANSETT BAY. Determination of geographical positions of light-houses in, p. 34.
NASHAQUITSA, MASS., pp. 27, 33.
NASH ISLAND, MAINE. Reference to, pp. 22, 23.
NASH ROCK (or Black Rock). Reference to, p. 22.
NAUSHON ISLAND, MASSACHUSETTS. Topographical survey of, p. 33.
NAUTILUS SHOAL. Depth in vicinity of, p. 45.
NAVAL ACADEMY, ANNAPOLIS, MD. Aid received from authorities of, p. 40.
NAVAL ACADEMY GROUNDS, ANNAPOLIS, MD. Detailed survey of, p. 40.
NAVAL CEMETERY, ANNAPOLIS, p. 40.
NAVAL OBSERVATORY AT MARE ISLAND, CALIFORNIA, p. 78.
NAVAL OFFICERS. List of attached to Coast and Geodetic Survey, p. 176; list of attached to Coast and Geodetic Survey during fiscal year, 1889, p. 175; number of attached to the Survey, p. 176.
NAVIGATION ON ATLANTIC AND PACIFIC COASTS. Requirements of, recognized, p. 100.
NAVY-YARD SITE COMMISSION, ATLANTIC COAST. Surveys for, pp. 54, 93.
NAVY-YARD SITE COMMISSION, PACIFIC COAST. Special survey for, pp. 74, 93, 94.
NAVY-YARD WHARF. Triangulation Station, Pensacola Bay, p. 53.
NEBRASKA. State of, included in Section XV, p. 87.
NEAH BAY, WASHINGTON TERRITORY. Hydrographic survey in, pp. 74, 75.
NEEDLES, CAL. Latitude and longitude of, determined, p. 69.
NELSON, JOHN. AID. Service in Southern California, p. 63; service in Los Angeles base measurement, pp. 64–66.
NES, D. S., ENSIGN, U. S. N. Services on steamer *Gedney*, p. 21; reference to, p. 175.
NESBITT, MRS. M. E. Tidal Division, p. 142.
NEVADA. State of, included in Section XVI, p. 90.
NEW BEDFORD, MASS., p. 52.
NEW HAMPSHIRE. State of, included in Section I, p. 19.
NEW JERSEY. State of, included in Section II, p. 34.
NEW MEXICO. Territory of, included in Section XVI, p. 90.
NEWPORT LANDING, CAL., pp. 63, 64.
NEW YORK. State of, included in Section II, p. 34.
NICHOLS, H. E., LIEUTENANT COMMANDER, U. S. N., ASSISTANT. Contract with Alaska Commercial Company for transportation of boundary survey parties, p. 94; collection of data for Alaska Coast Pilot, p. 166; reference to, pp. 175, 176.
NICHOLS AVENUE, D. C., p. 42.
NICKERSON. Triangulation station in Massachusetts, p. 25.
NIGHT SIGNALS. Use of, recommended in triangulation of Pennsylvania, p. 37.
NO MAN'S LAND, p. 30; resurvey of, p. 32.
NONAMESSET ISLAND, MASSACHUSETTS. Topographical survey of, p. 33.
NORTH BASE STATION, STEPHENS PASSAGE, ALASKA, p. 79.
NORTH CAROLINA. Included in Section IV, p. 46.
NORTH CHANNEL. Near Cape Charles, Virginia, p. 45.
NORTH CHATHAM, CAPE COD, MASSACHUSETTS. Reference to, p. 23.
NORTHEAST BASE, LOS ANGELES, CAL., p. 64.
NORTH OGDEN. Triangulation station in Utah, p. 90.
NORTH PUEBLO, COLO. Magnetic observations at new station, p. 92.
NORTH TISBURY, MASS., p. 29.
NORTH VERNON, IND., p. 85.
NORTHWEST BAR, KEY WEST, p. 51.
NORTHWEST BASE, LOS ANGELES, CAL., p. 64.
NORTHWEST CHANNEL. Near Cape Charles, Va., p. 45.
NORTHWEST CHANNEL BAR, KEY WEST. Hydrographic survey of, pp. 49, 51, 52.
NOTICE TO MARINERS, No. 115. Reference to, p. 52; pp. 144, 145, 166.
NUMBER OF MEN ATTACHED TO THE COAST AND GEODETIC SURVEY VESSELS DURING THE FISCAL YEAR ENDING JUNE 30, 1889, p. 177.
NUMBER OF MILES RUN WHILE SOUNDING, p. 112.
NUMBER OF NAVAL OFFICERS ATTACHED TO THE COAST AND GEODETIC SURVEY VESSELS AND TO THE OFFICE OF THE SURVEY DURING THE FISCAL YEAR ENDING JUNE 30, 1889, p. 176.
NUMBER OF SOUNDINGS, p. 112.
NUMBER OF VESSELS IN ACTIVE SERVICE, p. 177.

## O.

OAK HARBOR, WASHINGTON TERRITORY. Survey of, pp. 75–76.
OAK HILL-NEALS. Line in triangulation in Maine, p. 19.
OBLIQUE ARC OF THE MERIDIAN. Extension of, in Alabama, p. 55.
OBSERVATIONS OF CURRENTS IN NEW YORK LOWER BAY, p. 36.
OBSERVATORY INLET. Reference to, p. 81.
OBSTRUCTION PASS, WASHINGTON TERRITORY, p. 78.
OCCUPATION OF A STATION IN LOUISIANA FOR MAGNETIC OBSERVATIONS, p. 56.
OCCUPATION OF A STATION IN TENNESSEE FOR MAGNETIC DETERMINATIONS, p. 84.
OCCUPATION OF STATIONS FOR CONNECTING THE TRIANGULATION OF THE STATE OF TENNESSEE WITH THE PRIMARY TRIANGULATION IN NORTHERN GEORGIA, pp. 83–84.
OCCUPATION OF STATIONS FOR EXTENDING THE TRANSCONTINENTAL TRIANGULATION NEAR THE THIRTY-NINTH PARALLEL TO THE WESTWARD IN KANSAS, pp. 88–89.
OCCUPATION OF STATIONS FOR THE EXTENSION OF THE PRIMARY TRIANGULATION IN ALABAMA TOWARDS THE GULF OF MEXICO, p. 55.
OCCUPATION OF STATIONS FOR THE EXTENSION TO THE EASTWARD IN UTAH OF THE PRIMARY TRIANGULATION NEAR THE THIRTY-NINTH PARALLEL, pp. 90–91.
OCEANSIDE, CAL., p. 62.
OCKLOHONEE SHOAL, FLORIDA, p. 52.
OFFICE, COAST AND GEODETIC SURVEY. Notice of work of, pp. 95–99; annual report of work in, pp. 121–159.
OFFICE EXPENSES. Estimate for pay of, p. 15.
OFFICE FORCE. Estimate for pay of, pp. 14–15; necessity for increase in, p. 95.
OFFICE OF CONSTRUCTION OF STANDARD WEIGHTS AND MEASURES. Reference to work of, p. 122; annual report of, pp. 159, 160.
OFF SHORE HYDROGPAPHIC SURVEY BETWEEN CEDAR KEYS AND LIGHT-HOUSE POINT, WEST COAST OF FLORIDA, pp. 52–53.
OGDEN, H. G., ASSISTANT. In charge of Engraving Division, Coast and Geodetic Survey Office, pp. 96, 136; reference to, p. 121; annual report of, pp. 133–137.
OGDEN AND SALT LAKE, UTAH. Longitude stations connected with main triangulation, p. 91.
OGDEN OBSERVATORY. Triangulation station in Utah, p. 90.
OGDEN PEAK. Triangulation station in Utah, p. 90.
OHIO (State of). Included in Section XIV, p. 84.
OHIO RIVER. Geodetic levels carried across, p. 86.
OIL. Triangulation station in Louisiana, p. 58.
OLBERG, J. Drawing Division, pp. 128, 130, 132.
OLD COLONY RAILROAD, p. 25.
OLD PLANTATION INLET TO CAPE CHARLES. Included in resurvey, p. 45.
OLD PLANTATION LIGHT-HOUSE, p. 46.
OLIVER INLET, ALASKA, p. 79.
OLIVER INLET AND SEYMOUR CANAL, ALASKA. Portage connecting, p. 80.
OLIVER, JAMES H., ENSIGN, U. S. N. Service on steamer *Patterson*, pp. 78, 79.
OLNEY. Triangulation station in Washington Territory, p. 75.
OLYMPIA, WASH. T., p. 78.
OMAHA, NEBRASKA. Magnetic observations at, p. 88.
ONO ISLAND. Cutting of boat channel near, pp. 53, 54.
ORANGE COUNTY, CAL., p. 64.
ORCAS ISLAND, WASHINGTON TERRITORY. Topography of, pp. 77, 78.
OREGON (State of). Included in Section XI, p. 71.
ORGANIZATION OF PARTIES TO MAKE A PRELIMINARY DETERMINATION OF THE BOUNDARY LINE BETWEEN ALASKA AND BRITISH COLUMBIA, pp. 94–95.
ORIGINAL HYDROGRAPHIC SHEETS PLOTTED, VERIFIED, AND INKED DURING THE FISCAL YEAR ENDING JUNE 30, 1889. Tabular statement of, pp. 169–170.
OTTUMWA, IOWA. Magnetic observations at, p. 88.
OVER, C. H. T., Messenger, p. 146.
OWENS, THOMAS, ASSISTANT SURGEON, U. S. N. Service on steamer *Blake*, pp. 46, 49; reference to, pp. 175, 176.
OXON RIVER CREEK, DISTRICT OF COLUMBIA, 42.

## P.

PACIFIC COAST. Brief notices of hydrographic work on. Appendix No. 5, pp. 163–164; vessels and naval officers engaged in work on, p. 176.
PACIFIC COAST PILOT. Reference to, pp. 67, 68, 123.
PADILLA BAY, WASHINGTON TERRITORY, p. 75.
PAGE, JAMES. Computing Division, pp. 124, 126.
PAGE, PETER, Messenger, p. 146.
PAINE, S. C., LIEUTENANT, U. S. N., ASSISTANT. Hydrographic resurveys in Nantucket and Vineyard Sounds, pp. 29–30, 31, 161.
PALINURUS (schooner), 177.
PAMET RIVER LIFE-SAVING STATION, MASSACHUSETTS, p. 23.
PARKER, DAVID, watchman, p. 146.
PARSONS, F. H., SUB ASSISTANT. Service on coast of Florida, p. 53; services in Kansas, p. 89; office of weights and measures, pp. 99, 159.
PARSONS, JOHN W. In charge of Accounting Division, Coast and Geodetic Survey Office, pp. 98, 158; reference to, p. 121; annual report of, pp. 155–159.
PARTS I, II, AND III OF ANNUAL REPORT. Reference to contents of, p. 1.
PARTIES DOING TIDAL WORK EXCLUSIVELY. Number of, p. 112.
PARTIES DOING TIDAL WORK IN CONNECTION WITH HYDROGRAPHIC WORK, p. 112.
PARTIES ENGAGED IN GRAVITY MEASURES. Number of, p. 111.
PARTIES ENGAGED IN HYDROGRAPHY. Number of, p. 112.
PARTIES ENGAGED IN RECONNAISSANCE. Number of, p. 111.
PARTIES (FIELD) OF THE SURVEY. Distribution of. Appendix No. 1, pp. 103–109.
PARTY EXPENSES. Estimate for, pp. 11–13.
PASSAMAQUODDY BAY, MAINE. Reference to, p. 22.
PASSED ASSISTANT ENGINEERS, U. S. N. Number of, attached to Coast and Geodetic Survey, p. 175.
PASSED ASSISTANT PAYMASTER, U. S. N. Attached to Coast and Geodetic Survey, p. 175.
PASSED ASSISTANT SURGEONS, U. S. N. Number of, attached to Coast and Geodetic Survey, p. 175.
PATCH (near Nashville, Brown County). Triangulation station in Indiana, p. 85.
PATOS ISLAND, WASHINGTON TERRITORY, p. 77.
PATTERSON (steamer). Use of, and reference to, pp. 78, 82, 163, 164, 165, 176, 177.
PAVILION KEY, p. 51.
PEAKED HILL LIFE-SAVING STATION, MASS., p. 25.
PEARSE CHANNEL. Survey of, p. 80.
PEARSE ISLAND, p. 81.
PECOS, REEVES COUNTY, TEX. Magnetic observations at, p. 60.
PEIRCE, CHARLES S., ASSISTANT. Reduction of pendulum observations, reference to, p. 100.
PEMBROKE, ME. Included in topographical survey, p. 22.
PEMBROKE TOWNSHIP, MASS, p. 25.
PENDULUM OBSERVATIONS, ORIGINAL RECORDS, NUMBER OF VOLUMES, p. 112.
PENDULUM WORK. Records and computations of, received, p. 151.
PENINSULA OF FLORIDA, FROM ST. MARY'S RIVER ON THE EAST COAST TO AND INCLUDING ANCLOTE ANCHORAGE ON THE WEST COAST, WITH THE COAST APPROACHES, REEFS, KEYS, SEAPORTS, AND RIVERS, COMPRISING SECTION VI, p. 48.
PENINSULA OF FLORIDA, WEST COAST, FROM ANCLOTE ANCHORAGE TO PERDIDO BAY, INCLUDING COAST APPROACHES, BAYS, AND RIVERS. Comprising Section VII, p. 52.
PENOBSCOT MOUNTAIN. Station in triangulation of Pennsylvania, pp. 37, 38.

PENN'S COVE, WASHINGTON TERRITORY. Survey of, pp. 75, 76.
PENNSYLVANIA. State of, included in Section II. p. 34.
PENSACOLA BAY, FLORIDA. Connection of triangulation with that of Perdido Bay, pp. 53–54.
PENSACOLA BAY. Survey of, pp. 54, 55.
PENSACOLA AND ATLANTIC RAILROAD. Reference to, p. 93.
PENSACOLA AND PERDIDO BAYS. Triangulation between, pp. 54–55.
PENSACOLA ENTRANCE. p. 53.
PENSACOLA LIGHT-HOUSE. Geographical position of, determined, p. 54.
PENSACOLA NAVY-YARD. Geographical position of derrick in the, determined. p. 54.
PERCY, H. T., PASSED ASSISTANT SURGEON, U. S. N., pp. 175, 176.
PERDIDO BAY, FLORIDA. Triangulation of, pp. 53–54.
PERKINS, F. W., ASSISTANT. Continuation of the triangulation in northeastern Pennsylvania required to complete the Pamplico-Chesapeake-Lake Ontario arc of the meridian, pp. 37–38, 40, 41; occupation of stations for the extension of the primary triangulation in Alabama towards the Gulf of Mexico, p. 55; measurement of base and verification of triangulation on the coast of Louisiana, p. 57.
PERMANENT MAGNETIC STATIONS OCCUPIED. Number of, p. 111.
PERUVIAN ARC. The need of a remeasurement of the. Appendix No. 7, pp. 199–208.
PETERS, G. H., LIEUTENANT, U. S. N., ASSISTANT. In charge of Coast Pilot Division, pp. 166, 174. Reference to, p. 19.
PETERSEN, A. Engraving Division, pp. 134, 136, 137.
PHILADELPHIA, SUB-OFFICE AT. Notice of work of, p. 99.
PHOTOGRAPHING. Statistics of, p. 133.
PHOTOGRAPHS. By party on steamer *Patterson*; reference to, pp. 80, 81.
PHYSICAL HYDROGRAPHY—CONTINUATION OF THE OBSERVATION OF ICE FORMATION AND MOVEMENT IN DELAWARE RIVER AND BAY, p. 39.
PHYSICAL HYDROGRAPHY—CONTINUATION OF THE SURVEY OF THE COAST OF CAPE COD PENINSULA FROM THE VICINITY OF CHATHAM TO THE NORTHWARD, pp. 23–25.
PHYSICAL HYDROGRAPHY—GULF STREAM EXPLORATIONS—OBSERVATIONS OF CURRENTS IN 1888 AND 1889, pp. 48–49.
PHYSICAL HYDROGRAPHY—OBSERVATIONS OF OCEAN CURRENTS OFF THE CAPES OF VIRGINIA AND BETWEEN NANTUCKET AND CAPE HATTERAS, p. 46.
PIERCE, E. E. Services in Massachusetts, p. 26.
PIKE COUNTY, PA., p. 37.
PILLSBURY, J. E., LIEUTENANT, U. S. N., ASSISTANT. Hydrographic examinations on the coasts of Maine and Massachusetts, pp. 22–23; physical hydrography—observations of ocean currents off the capes of Virginia and between Nantucket and Cape Hatteras, p. 46; physical hydrography—Gulf Stream explorations—observations of currents in 1888 and 1889, pp. 48–49; report by, Appendix No. 16, pp. 467–477; reference to, pp. 51, 161, 162, 175, 176.
PILOT PEAK. Triangulation station in Utah, p. 91.
PILOT PEAK—IBAPAH—MOUNT NEBO—OGDEN PEAK. Quadrilateral in transcontinental triangulation, p. 91.
PINE ISLAND, MASSACHUSETTS, p. 33.
PLEASANT POINT, MAINE, p. 20.
PLAN FOR PRELIMINARY SURVEY OF THE ALASKA BOUNDARY, APPROVED BY SECRETARY OF STATE, p. 94.
PLYMPTON TOWNSHIP, MASS., p. 25.
PLYMOUTH TOWNSHIP, MASS., p. 25.
POINT ADAMS, OREGON, p. 73.
POINT ARDEN, ALASKA, p. 86.
POINT ARENA, CAL. Longitude and magnetic elements determined at, p. 69.
POINT DOUGHTY, WASHINGTON TERRITORY, p. 77.
POINT ELLICE, OREGON, p. 73.
POINT FIRMIN, CALIFORNIA. Examination for shoal near, pp. 63–64.
POINTS IN ALASKA, to be accurately located in latitude and longitude for preliminary determination of boundary, p. 94.
POINT LAWRENCE, WASHINGTON TERRITORY, p. 77.
POINT LOMA, CALIFORNIA, p. 61.
POINT ROBERTS, WASHINGTON TERRITORY, p. 78.
POPLAR HILL. Triangulation station in District of Columbia, p. 44.
PORCUPINE RIVER, ALASKA, p. 94.
PORTAGE BAY (FREDERICK SOUND), ALASKA, p. 79.
PORTLAND, OREGON. Longitude determinations at, p. 73.
PORTLAND CANAL, ALASKA. Hydrographic surveys in, pp. 78–82; length of, p. 81; survey of, reference to, pp. 94, 164.
PORTLAND INLET, p. 67.
PORT ORCHARD, WASHINGTON TERRITORY. Selected as the site for a Navy-yard on the Pacific Coast, p. 93; survey of for Navy-yard Site Commission, pp. 74, 93–94.
PORT ORFORD, OREGON, p. 71.
PORT SIMPSON, BRITISH COLUMBIA, pp. 79, 80.
PORT SNETTISHAM, ALASKA, pp. 79, 80.
PORT SUSAN, WASHINGTON TERRITORY. Connection of triangulation, p. 75.
PORT TOWNSEND AND SEATTLE, WASHINGTON TERRITORY. Difference of longitude determined, pp. 73–74.
PORT TOWNSEND, WASHINGTON TERRITORY. Longitude determination at, pp. 73, 74; longitude station at, pp. 73, 74; magnetic observations at, pp. 73, 74; reference to, p. 78.
PRATT, J. F., ASSISTANT. Triangulation and topography of Saratoga Passage, Penn's Cove, Oak Harbor, Crescent Harbor, and Skagit Bay, Washington Territory, pp. 75–76; survey for the Commission organized to select a site for a Navy yard on the Pacific Coast north of the forty-second parallel of north latitude, pp. 93–94.
PRELIMINARY SURVEY OF THE FRONTIER LINE BETWEEN ALASKA AND BRITISH COLUMBIA, p. 83.
PRESIDENT OF THE NAVY-YARD SITE COMMISSION, ATLANTIC COAST, p. 158.
PRESIDENT OF THE NAVY-YARD SITE COMMISSION, PACIFIC COAST, p. 94.
PRESIDENT OF THE UNITED STATES. Reference to, p. 99.
PRESIDIO ASTRONOMICAL STATION, SAN FRANCISCO. Magnetic observations at, p. 67.
PRESTON, E. D., ASSISTANT. Engaged in office work at Washington, p. 100; report by; appendix No. 7, pp. 199–208.
PREWETT CREEK, CAL., p. 66.
PRIMARY BASE LINES. Number of, p. 111; length of, p. 111.
PRINTED SHEETS OF MAPS AND CHARTS DEPOSITED WITH SALE AGENTS. Number of, p. 113.
PRINTED SHEETS OF MAPS AND CHARTS DISTRIBUTED. Number of, p. 113.
PRINTING. Statistics of, p. 133.
PRINTING AND BINDING. Estimate for, p. 16.
PROGRESS IN BASE-MEASUREMENT. Snelling Avenue base, p. 87.
PROMPT PUBLICATION OF CHARTS. Advantage of, p. 168.
PROSPECT. Triangulation station in Massachusetts, p. 29.
PROSPECT HILL, MASSACHUSETTS, p. 27.
PROVINCETOWN, MASS., p. 24.
PUBLICATIONS (NEW) OF COAST AND GEODETIC SURVEY, p. 144.
PUBLICATIONS OF THE COAST AND GEODETIC SURVEY. List of, with number of copies of each received from the Public Printer during the year, p. 146.
PUBLICATIONS SENT TO PRESS. Titles of, pp. 144–145.
PUBLISHING OBSERVATIONS. Estimate for, p. 16.
PULIZZI, F. A. Services in Kansas, p. 89.

**Q.**

QUANTUCK BAY AND SMITH'S POINT, LONG ISLAND. Topographical survey of shore line between, completed, p. 35.
QUARANTINE STATION, SAN FRANCISCO. Examination for location of, p. 69.
QUARRY POINT, SAN FRANCISCO BAY, p. 70.
QUICK (schooner). Use of and reference to, pp. 51, 177.
QUODDY HEAD, MAINE. Reference to, p. 22.

**R.**

RACCOON POINT, ISLE DERNIERE, LA., p. 59.
RACHAEL KEY AND HOG ISLAND, COAST OF FLORIDA. Search for reported rock in vicinity of, p. 50.

RAMSDEN POINT, PORTLAND CANAL, p. 81.
READ, JOHN J., COMMANDER U. S. N., INSPECTOR FOURTH LIGHT-HOUSE DISTRICT. Acknowledgment of aid received from, p. 39.
READY (schooner), 177.
RECENT CHANGES IN THE SOUTH INLET INTO EDGARTOWN HARBOR, MARTHA'S VINEYARD. Appendix No. 14, pp. 459-460.
RECONNAISSANCE. For connection of Snelling avenue base line with the triangulation, p. 87.
RECONNAISSANCE. Statistics of, p. 111.
RECONNAISSANCE AND BUILDING OF SIGNALS IN CONNECTION WITH THE TRANSCONTINENTAL TRIANGULATION IN OHIO AND INDIANA, pp. 84-85.
RECORDS. Statistics of, p. 112.
RECORDS AND COMPUTATIONS RECEIVED IN ARCHIVES. Tabular statements of, pp. 150-151.
RECORDS, COMPUTATIONS, AND ORIGINAL SHEETS OF SURVEYS. Received and registered during the year; statistics of, p. 154.
RECOVERY AND REESTABLISHMENT OF STATIONS OF THE TRIANGULATIONS OF 1849, 1857, AND 1865 FOR THE EXTENSION OF A TERTIARY TRIANGULATION, WITH TOPOGRAPHY AND HYDROGRAPHY UP THE COOPER, ASHLEY, AND WANDO RIVERS, SOUTH CAROLINA, p. 47.
REINHARDT (Morris County). Triangulation station in Kansas, p. 98.
REIZIN (near Elrod, Ripley County). Triangulation station in Indiana, p. 84.
RENT OF OFFICE BUILDINGS. Estimate for, p. 16.
REPAIRS OF VESSELS. Statement of work done under appropriation for, p. 165. Amount appropriated insufficient, p. 165.
REPAIRS AND MAINTENANCE OF VESSELS. Estimate for, p. 13.
REPORT (ANNUAL) OF THE COAST AND GEODETIC SURVEY FOR THE FISCAL YEAR ENDED JUNE 30, 1889. Transmitted to the Secretary of the Treasury, p. 1.
REPORT (ANNUAL) OF THE ACCOUNTING DIVISION. Coast and Geodetic Survey Office, pp. 155-159.
REPORT (ANNUAL) OF THE ARCHIVES AND LIBRARY. COAST AND GEODETIC SURVEY OFFICE, pp. 150-154.
REPORT (ANNUAL) OF THE ASSISTANT IN CHARGE OF OFFICE AND TOPOGRAPHY. Appendix No. 4, pp. 121-124.
REPORT (ANNUAL) OF THE CHART DIVISION. Coast and Geodetic Survey Office, pp. 147-149.
REPORT (ANNUAL) OF THE COAST PILOT DIVISION, pp. 173-174.
REPORT (ANNUAL) OF THE COMPUTING DIVISION. COAST AND GEODETIC SURVEY OFFICE, pp. 124-127.
REPORT (ANNUAL) OF THE DRAWING DIVISION. COAST AND GEODETIC SURVEY OFFICE, pp. 127-132.
REPORT (ANNUAL) OF THE ENGRAVING DIVISION. COAST AND GEODETIC SURVEY OFFICE, pp. 133-137.
REPORT (ANNUAL) OF THE HYDROGRAPHIC INSPECTOR FOR THE FISCAL YEAR ENDING JUNE 30, 1889. Appendix No. 5, pp. 161-177.
REPORT (ANNUAL) OF THE INSTRUMENT DIVISION. COAST AND GEODETIC SURVEY OFFICE, pp. 138-140.
REPORT (ANNUAL) OF THE MISCELLANEOUS DIVISION. COAST AND GEODETIC SURVEY OFFICE, pp. 143-146.
REPORT (ANNUAL) OF THE OFFICE OF STANDARD WEIGHTS AND MEASURES, pp. 159, 160.
REPORT (ANNUAL) OF THE TIDAL DIVISION, COAST AND GEODETIC SURVEY OFFICE, pp. 141-142.
REPORT OF GEORGE DAVIDSON, ASSISTANT U. S. COAST AND GEODETIC SURVEY, APPOINTED BY THE PRESIDENT OF THE UNITED STATES AS THE DELEGATE TO THE NINTH CONFERENCE OF THE INTERNATIONAL GEODETIC ASSOCIATION HELD AT PARIS, OCTOBER, 1889: Appendix No. 18, pp. 493-503.
REPORT ON THE MEASUREMENT OF THE LOS ANGELES BASE-LINE. LOS ANGELES AND ORANGE COUNTIES, CAL. Appendix No. 10, pp. 217-231.
REPORT ON THE RESULTING LENGTH AND PROBABLE UNCERTAINTY OF FIVE PRINCIPAL BASE-LINES, MEASURED WITH THE COMPENSATION BASE APPARATUS. BACHE-WÜRDEMANN, OF THE COAST SURVEY, BETWEEN THE YEARS 1847 AND 1855, INCLUSIVE. Appendix No. 17, pp. 479-491.
RESULTS OF SPIRIT LEVELING BETWEEN TIDE-WATER AT ANNAPOLIS, MD., AND THE CAPITOL BENCH-MARK AT WASHINGTON, D. C., FROM OBSERVATIONS IN 1875, BY F. W. PERKINS, ASSISTANT. Appendix No. 15, pp. 461-466.
RESURVEY OF THE NEW INLET INTO COTAMY BAY. MARTHA'S VINEYARD, p. 26. See also Appendix No. 14, pp. 459, 460.
RESURVEYS. Needed on Atlantic coast, p. 169.
RESURVEYS AND EXAMINATION OF CHANGES IN THE COLUMBIA RIVER, IN THE VICINITY OF ASTORIA AND BETWEEN TONGUE POINT AND TANSY POINT, p. 7.
REVILLE, MISS A. G. Tidal Division, p. 141.
RHODE ISLAND. State of, included in section I, p. 19.
RICHARDS BUILDING. Reference to, p. 122.
RICHARDSON, A. Packer and folder, p. 146.
RICHARDSON, W. W. Carpenter, U. S. Navy, p. 175.
RICKETTS. Triangulation station in District of Columbia, p. 44.
RIDGE ROAD, D. C., p. 43.
RITTER, HOMER P. Services in physical hydrography, pp. 23-24.
ROCK AND AFTER. Triangulation stations in Washington Territory, p. 75.
ROCKAWAY BEACH, LONG ISLAND. Movement westward, of west end of, p. 35.
ROCK CREEK. Survey of region about, pp. 41, 42.
ROCK CREEK VALLEY, p. 42.
ROCKY BUTTE. Triangulation station in California, p. 66.
ROCKWELL, CLEVELAND, ASSISTANT. Resurveys and examination of changes in the Columbia River, in the vicinity of Astoria, and between Tongue Point and Tansy Point, pp. 72-73.
RODGERS, A. F., ASSISTANT. Extension of the topographical survey of the south coast of California from Del Mar to beyond Oceanside, p. 62; engaged in office work, p. 63.
ROETH, J. H. Office of Hydrographic Inspector, pp. 123, 166.
ROGERS, A. G., 175.
ROGUE RIVER AND CAPE SEBASTIAN. Completion of topographical reconnaissance of coast between, pp. 71-72.
ROGUE RIVER REEF, OREGON. Sunken rock near, p. 71.
ROSARIO STRAIT, WASHINGTON TERRITORY. Hydrographic survey of, pp. 76, 77.
ROSS, JOHN. Services in Coast Pilot Division, pp. 19, 166, 174.
RUMSEY, H. E., ENSIGN, U. S. N., p. 175.
RUSSELL, R. L., ENSIGN, U. S. N., p. 175.

S.

SABINE PASS. Base line at. Reference to, p. 57.
SACRAMENTO AND LOS ANGELES, CAL. Difference of longitude determined, p. 69.
SACRAMENTO AND MARYSVILLE, CAL. Difference of longitude determined at, p. 69.
SACRAMENTO, CAL., AND VERDI, NEV. Difference of longitude determined, pp. 68, 92.
SAGINAW CHANNEL, ALASKA, p. 80.
SALMON BAY, LAKE UNION, AND LAKE WASHINGTON. Resurveys of, recommended, p. 74.
SALT LAKE CITY, UTAH, p. 90; meridian line established at, p. 91.
SAMPSON, COMMANDER, U. S. N. Aid received from, pp. 40, 41.
SAN ANTONIO, TEX., p. 66.
SAN DIEGO, CAL., pp. 62, 63, 70.
SAN DIEGO AND OCEANSIDE, CAL. Hydrographic surveys between, pp. 61, 62.
SAN DIEGO ENTRANCE, CALIFORNIA, p. 61.
SANDWICH TOWNSHIP, MASS., p. 25.
SANDY KEY, p. 49.
SAN FRANCISCO, CAL., SUB-OFFICE AT. Notice of work of, p. 99.
SAN FRANCISCO AND MOUNT HAMILTON. Difference of longitude between, determined, p. 68.
SAN FRANCISCO AND POINT ARENA. Difference of longitude determined, p. 68.
SAN FRANCISCO AND SACRAMENTO. Difference of longitude determined, p. 68.
SANKATY HEAD, p. 31.
SAN MATEO POINT, CALIFORNIA, p. 62.
SAN MATEO, SAN ONOFRE, LAS FLORES, LA MARGARITA, SAN LUIS REY, SAN DIEGO (RIVER), AND SWEETWATER. Streams in southern California available for water storage, p. 62.

SAN ONOFRE MOUNTAIN, p. 63.
SAN PEDRO, CAL., pp. 63, 64.
SANTA ANA, CAL., p. 67.
SANTA ANA RIVER AND NEWPORT LANDING, CALIFORNIA. Tidal observations at, p. 64.
SANTA FÉ RAILROAD, p. 64.
SANTA LUCIA. Triangulation station in California, p. 66.
SARATOGA PASSAGE, WASHINGTON TERRITORY. Hydrographic survey of, pp. 75, 76, 77.
SARATOGA PASSAGE AND SKAGIT BAY. Hydrography of, pp. 76, 77.
SARGENT, FRED. Tide observer, St. Paul, Kadiak Island, Alaska, pp. 82, 83.
SAVANNAH, GA. Tide observations near, p. 48.
SAVOY, WILLIAM. Messenger, p. 146.
SCARBOROUGH HILL, NEAR ASTORIA, OREGON, pp. 72, 73.
SCHNEIDER, H. J. Drawing Division, p. 128.
SCHOEBERLE, PROF. Aid rendered by, in telegraphic longitude work, p. 68.
SCHOTT, CHARLES A., ASSISTANT. In charge of Computing Division, pp. 96, 127; preparation of an isogonic map of the United States, p. 96; member of Board of Examiners, Civil Service Commission, p. 96; reference to, pp. 60, 121, 160; reports by. Appendix No. 6, pp. 179–197; appendix No. 8, pp. 209–212; appendix No. 11, pp. 233–402; appendix No. 15, pp. 461–466; appendix No. 17, pp. 479–491.
SCHOONERS. Number of, used in Coast and Geodetic Survey, p. 177.
SCHUYLKILL COUNTY, PA., p. 37.
SCHUYLKILL RIVER. Additions to surveys of, p. 38.
SCORESBY (schooner). Use of, and reference to, pp. 47, 176, 177.
SCREW PILES. Used as triangulation marks on coast of Florida, p. 50.
SEATTLE, WASH. Latitude determination at, pp. 73, 74; longitude determination at, pp. 73, 74; magnetic observations at, pp. 73, 74; surveys and examinations in vicinity of, p. 74.
SEATTLE HARBOR, pp. 74, 75.
SEATUCK COVE, LONG ISLAND, p. 35.
SECONDARY SIX-METRE CONTACT-SLIDE BASE APPARATUS. Used in measurement of Snelling Avenue base, p. 87.
SECRETARY OF STATE. Report of survey of Portland Canal and vicinity transmitted to, p. 81; reference to, p. 94.
SECRETARY OF STATE OF NORTH CAROLINA. Reference to, p. 47.
SECRETARY OF THE TREASURY. Reference to, pp. 95, 100, 122.
SECTION I. Progress of work in, pp. 19–34.
SECTION II. Progress of work in, pp. 34–39.
SECTION III. Progress of work in, pp. 40–46.
SECTION IV. Progress of work in, pp. 46, 47.
SECTION V. Progress of work in, pp. 47, 48.
SECTION VI. Progress of work in, pp. 48–51.
SECTION VII. Progress of work in, pp. 52–55.
SECTION VIII. Progress of work in, pp. 55–59.
SECTION IX. Progress of work in, pp. 60–61.
SECTION X. Progress of work in, pp. 61–71.
SECTION XI. Progress of work in, pp. 71–78.
SECTION XII. Progress of work in, pp. 78–83.
SECTION XIII. Progress of work in, pp. 83, 84.
SECTION XIV. Progress of work in, pp. 84–86.
SECTION XV. Progress of work in, pp. 87–89.
SECTION XVI. Progress of work in, pp. 90–92.
SECTION XVII. Progress of work in, pp. 92, 93.
SEFTON, A. H. Engraving Division, pp. 134, 137.
SELECTION OF A SITE FOR AN AUTOMATIC TIDE GAUGE ON TYBEE ISLAND, SAVANNAH RIVER ENTRANCE, p. 48.
SEMI-AH-MOO BAY, WASHINGTON TERRITORY, p. 77.
SENGTELLER, LOUIS A., ASSISTANT. Hydrographic examination of Hospital Cove, Angel Island, San Francisco Bay, pp. 69, 70; notice of death of, p. 70; reference to, p. 63.
SEVENTH STREET ROAD, DISTRICT OF COLUMBIA, p. 42.
SEVERN RIVER, p. 40.
SHELLFISH COMMISSIONER OF NORTH CAROLINA. Reference to, 47.
SHEPHERD'S HOUSE, DISTRICT OF COLUMBIA, p. 42.
SHIDY, L. P. Tidal Division, p. 141.
SHILSHOLE CREEK (OR SALMON BAY), WASHINGTON TERRITORY. Examination of, p. 76.
SHINDEL, J. E., ENSIGN, U. S. N. Service on steamer *Bache*, p. 31; service on steamer *Blake*, pp. 46, 49; reference to, pp. 175, 176; on steamer *Blake*, p. 49.
SHINNECOCK BAY, p. 34.
SHIP SHOAL, LOUISIANA. Survey of, p. 59.
SHIP SHOAL INLET TO CAPE HENRY. Included in resurvey, p. 45.
SHOAL BAY, WASHINGTON TERRITORY, p. 78.
SHORTLAND'S STATION, MAINE, p. 20.
SHREVEPORT, CADDO COUNTY, LA. Magnetic observations at, p. 56.
SIERRA BLANCO, EL PASO COUNTY, TEX. Magnetic observations at, p. 60.
SIMONS, A. B. Service on coast of Florida, p. 53; watchman, p. 146.
SINCLAIR, C. H., ASSISTANT. Exchanges of telegraphic signals for longitude, between San Francisco and Mount Hamilton, San Francisco and Sacramento, San Francisco and Point Arena, Point Arena and Sacramento, Sacramento and Marysville, Sacramento and Los Angeles, Los Angeles and San Francisco, Chabot Observatory, at Oakland, and San Francisco, Los Angeles and Needles, and Sacramento, Cal., and Verdi, Nev.; also determinations of latitude and the magnetic elements at Sacramento, Point Arena, Marysville, and Los Angeles, pp. 68, 69; longitude determinations in Washington Territory and Montana, p. 74; exchanges of signals for the determination of the longitude of Verdi, Nev., p. 92; exchanges of telegraphic signals for the determination of the longitude of Helena, Mont., pp. 92, 93; reference to work by, in Appendix No. 8, pp. 209–212.
SINCLAIR'S INLET, PORT ORCHARD, WASHINGTON TERRITORY, p. 93.
SIPE, E. H. Engraving Division, pp. 134, 137.
SITE FOR NAVY-YARD ON PACIFIC COAST, p. 93.
SITKA, ALASKA. Tide predictions made for, p. 97.
SKAGIT BAY, WASHINGTON TERRITORY. Survey of, pp. 75–77.
SLOCUM, GEORGE R., ENSIGN, U. S. N. Service on steamer *Patterson*, p. 78; reference to, pp. 175, 176.
SMITH, EDWIN, ASSISTANT. Exchanges of telegraphic signals for longitude, between Port Townsend and Seattle, between Seattle and Walla Walla, between Walla Walla, Washington Territory, and Helena, Mont., and between Helena and Spokane Falls, Washington Territory, pp. 73, 74; assigned to office duty, p. 74; exchanges of telegraphic signals for the determination of the longitude of Helena, Mont., p. 92; service in computing division, pp. 124, 127; report by (Appendix No. 9), pp. 213–216.
SMITH, J. L. Chart Division, p. 147.
SMITH, MISS PAULA E. Accounting Division, pp. 98, 157, 158.
SMITH ISLAND, VIRGINIA, p. 45.
SMOOT, J. H. Clerk to Engraving Division, pp. 97, 135.
SNEAD, DAVID E. Tide observer at Sandy Hook, N. J., p. 37; tidal division, p. 142.
SNELLING AVENUE, ST. PAUL, MINN. Base-line measurement, p. 87.
SNELLING AVENUE BASE LINE. Reconnaissance for connection of, with the triangulation, p. 87.
SOMBRERO KEY LIGHT TO NORTHWEST PASSAGE LIGHT, FLORIDA REEFS. Hydrographic sheet, p. 51.
SOMERVILLE BAY, p. 81.
SOMMER, E. J. Drawing Division, pp. 127, 130, 131, 132.
SOUTHAMPTON, LONG ISLAND, p. 28.
SOUTH BASE, STEPHENS PASSAGE, ALASKA, p. 79.
SOUTH CAROLINA. State of, included in section V, p. 47.
SOUTHEAST BASE, LOS ANGELES, CAL., p. 64.
SOUTHERN PACIFIC RAILROAD, p. 64.
SOUTHWEST REEF LIGHT-HOUSE, ATCHAFALAYA BAY, p. 59.
SPANISH MAIN, p. 48.
SPAULDING, J. G. Tide observer at Sandy Hook, N. J., p. 37; tide observer, Tybee Island, Ga., p. 48; Tidal Division, p. 142.
SPEAKER OF THE HOUSE OF REPRESENTATIVES. Letter transmitting annual report of survey to, p. iii.
SPECIAL OPERATIONS. Notices of work under head of, pp. 93–95.
SPECIMENS OF BOTTOM. Number of, p. 112.
SPEEL, J. N., PASSED ASSISTANT PAYMASTER, U. S. N., pp. 175, 176.
SPIRE OF ST. JOHNS. Triangulation station in Maryland, p. 40.
SPONGE FISHING. On coast of Florida, reference to, p. 52.

SPRUCE MOUNTAIN. Triangulation station in Maine, p. 19.
SPY (schooner). Use of and reference to, pp. 45, 49, 50, 51, 52, 162, 177.
SQUIPNOCKET, MASS., pp. 27, 33.
SQUIPNOCKET POINT, p. 30.
STAFF AND BOX-GAUGES DISCONTINUED, p. 112.
STAFF AND BOX-GAUGES ESTABLISHED FOR TIDAL OBSERVATIONS, p. 112.
STANDARDS OF LENGTH. Established at Binghamton, N. Y., and Montrose, Pa., pp. 36-37.
STANDARDS OF WEIGHT AND MEASURE. Provided for, p. 100.
STANDARD WEIGHTS AND MEASURES, OFFICE OF CONSTUCTION OF. Estimate of expenses, p. 17.
STANDARD WEIGHTS AND MEASURES. Reference to the distribution of to the several states, p. 159.
STANLEY, GENERAL D. S., U. S. ARMY. Reference to, p. 60; acknowledgement of assistance rendered by, p. 61.
STANTON AND HAMILTON AVENUES, D. C., p. 42.
STANWOOD FLATS, WASHINGTON TERRITORY, p. 75.
STANWORTH, C. S., ENSIGN, U. S. N. Service on steamer *Blake*, pp. 46, 49; reference to, pp. 175, 176.
STATE CAPITOL GROUNDS, DES MOINES, IOWA. Magnetic station occupied in, p. 88.
STATE CAPITOL, SACRAMENTO, CAL. Longitude station in grounds of, p. 68.
STATE HOUSE. Triangulation station in Maryland, p. 40.
STATE UNIVERSITY, MINNEAPOLIS, MINN. Assistance rendered by students of, in Snelling avenue base measurement, p. 87.
STATIONS (TRIANGULATION) OCCUPIED FOR HORIZONTAL MEASURES. Number of, p. 111.
STATIONS (TRIANGULATION) OCCUPIED FOR VERTICAL MEASURES. Number of, p. 111.
STATISTICS OF FIELD AND OFFICE WORK OF THE COAST AND GEODETIC SURVEY FOR THE YEAR ENDING JUNE 30, 1889. Appendix No. 2, pp. 111-113.
STATISTICS OF WORK IN THE MISCELLANEOUS DIVISION, p. 143.
ST. CROIX RIVER. Triangulation of, continued, pp. 19-20.
STEAMERS. Number of, used in Coast and Geodetic Survey, p. 177.
STEELE, J. M., PASSED ASSISTANT SURGEON, U. S. N. Service on steamer *Bache*, p. 31; service on steamer *Bache* and schooner *Spy*, pp. 50, 52; reference to, pp. 175, 176.
STEINHATCHEE RIVER, FLA. Tide observations at, p. 52.
STEINHEIL HELIOTROPES. Reference to, p. 139.
STEPHENS AND CLEVELAND PASSAGES, ALASKA. Hydrographic surveys in, pp. 78-82.
STIKINE RIVER, ALASKA, p. 94.
STILLAGUAMISH RIVER, WASHINGTON TERRITORY, p. 75.
STIRRUP KEY, p. 50.
ST. LUCIA PASSAGE. Reference to, p. 48.
ST. MICHAEL'S, NORTON SOUND, ALASKA, p. 95.
STOCKTON, C. H., LIEUTENANT COMMANDER, U. S. N. Member of Navy-yard Site Commission, Pacific Coast, p. 93.
STONE, C. H. Services in Physical Hydrography, p. 23; service in Louisiana, pp. 57, 58.
STONEY, GEORGE M., LIEUTENANT, U. S. N. Service on steamer *Hassler*, p. 62; reference to, p. 175.
STORM, O. Instrument Division, p. 139.
STOUT (Jefferson County). Triangulation station in, Indiana, p. 85.
STOW (Switzerland County). Triangulation station in, Indiana, p. 85.
ST. PAUL. Alaska Commercial Company's steamer, p. 95.
ST. PAUL AND MANITOBA R. R. Reference to, p. 87.
ST. PAUL, KADIAK ISLAND, ALASKA. Continuation of tide observations at, pp. 82-83; tide predictions made for, p. 97.
STRAITS OF FLORIDA. Reference to, p. 49.
STRAITS OF FUCA, pp. 74, 75.
STRAITS OF YUCATAN. Reference to, p. 49.
STRAUSS, JOSEPH, ENSIGN, U. S. N. Services on steamer *Gedney*, pp. 21, 72; reference to, pp. 175, 176.
STRICKLAND, G. D., PASSED ASSISTANT ENGINEER, U. S. N. Service on steamer *Hassler*, p. 62; reference to, p. 175, 176.
STRITE, S. M., ENSIGN, U. S. N. Service on steamer *Bache*, p. 31; service on steamer *Bache* and schooner *Spy*, pp. 50, 52; reference to, pp. 175, 176.
SUBDIVISIONS 6-7, ATLANTIC COAST PILOT. Reference to, p. 173.
SUBDIVISION NO. 22, ATLANTIC LOCAL COAST PILOT, STRAITS OF FLORIDA. Reference to, pp. 166, 173.
SUBMARINE CAÑON OFF LA JOLLA, CALIFORNIA, p. 61.
SUB-OFFICE, U. S. COAST AND GEODETIC SURVEY. At San Francisco, Cal., pp. 67, 99-100.
SUB-OFFICES, U. S. COAST AND GEODETIC SURVEY. Notices of work of, pp. 99-100.
SUBORDINATE BASE-LINES AND BEACH MEASURES. Number of, p. 111.
SUBSISTENCE ALLOWANCES. Proviso in reference to, p. 16.
SULLIVAN BAY. Reference to, p. 81.
SUMMARY OF OPERATIONS DURING THE YEAR, p. 2.
SUMMATION of work in the Drawing Division during the year, p. 129.
SUNDRY CIVIL EXPENSES ACT. Reference to, p. 94.
SUPERINTENDENT OF THE COAST AND GEODETIC SURVEY, pp. 1, III, 100.
SUPERVISION AND INSPECTION OF TOPOGRAPHICAL RESURVEYS ON MARTHA'S VINEYARD, NO MAN'S LAND, NAUSHON, IN THE VICINITY OF WOOD'S HOLL, AND ON THE SOUTHEASTERLY PART OF LONG ISLAND, pp. 26-28.
SUPPLEMENTARY WORK INCIDENTAL TO THE SPECIAL HYDROGRAPHY FOR THE STATE OF NORTH CAROLINA—SURVEYS AND INVESTIGATION OF OYSTER-BEDS, pp. 46-47.
SURVEY FOR THE COMMISSION APPOINTED TO SELECT A SITE FOR A NAVY-YARD ON THE GULF OF MEXICO AND SOUTH ATLANTIC COASTS, p. 93.
SURVEY FOR THE COMMISSION ORGANIZED TO SELECT A SITE FOR A NAVY-YARD ON THE PACIFIC COAST, NORTH OF THE FORTY-SECOND PARALLEL OF NORTH LATITUDE, pp. 93-94.
SURVEYOR-GENERAL OF CALIFORNIA. Reference to, p. 99.
SURVEYOR-GENERAL OF UTAH, p. 91.
SUSQUEHANNA RIVER, p. 37.
SWANN'S, DISTRICT OF COLUMBIA, p. 42.
SWEETWATER VALLEY, CAL., p. 62.
SWIFT, F., ENSIGN U. S. N., ASSISTANT. Hydrography on coast of Massachusetts, pp. 29-30; service on steamer *Bache* and schooner *Spy*, pp. 50-52; reference to, pp. 175, 176.
SWINEMISH FLATS, WASHINGTON TERRITORY, p. 75.
SYPHON TIDE GAUGE. Devised by Assistant H. L. Marindin, p. 24.

**T.**

TAKU HARBOR, ALASKA, p. 79.
TAKU RIVER, ALASKA, p. 94.
TALIAFERRO, MRS. S. M. Accounting Division, pp. 98, 157, 158.
TALLY'S POINT, p. 40.
TANEY, E. L., SUBASSISTANT. Topographical resurvey of the Elizabeth Islands off the coast of Massachusetts, p. 34; service in Louisiana, p. 57; triangulation in Utah, pp. 90, 91.
TARGET SIGNALS. Used in triangulation in Utah, p. 90.
TARRY NOT (steam launch). Use of and reference to, pp. 76, 77.
TASHMOO (or CHAPPAQUONSETT) POND, p. 52.
TATOOSH ISLAND, p. 75.
TAYLOR. Triangulation station in Kansas, p. 89.
TECOMA, NEVADA. Reference to, p. 91.
TELEGRAPHIC DETERMINATION OF THE LONGITUDE, OF A STATION ON MOUNT HAMILTON, CALIFORNIA, AND ITS TRIGONOMETRICAL CONNECTION WITH THE LICK OBSERVATORY. Appendix No. 8, pp. 209-212.
TELEGRAPHIC LONGITUDE WORK. Assistance rendered by Assistant George Davidson in prosecution of, p. 67.
TELEGRAPHIC LONGITUDE WORK. In California and Nevada, pp. 68, 69.
TEMPERATURE AND DENSITY OF SEA WATER. Observed at Delaware Breakwater, p. 39.
TEMPERATURE OF BASE-BARS DURING MEASUREMENT OF SNELLING AVENUE BASE, p. 87.
TENNESSEE, State of. Included in Section XIII, p. 83.
TERRE HAUTE, INDIANA. Magnetic observations at "Bache Fund" station, and azimuth determined, p. 84.
TERRESTRIAL MAGNETISM. Work of Assistant C. A. Schott in relation to, p. 96.

TERTIARY TRIANGULATION AND TOPOGRAPHY ON THE COAST OF CALIFORNIA, FROM CAPE SAN MARTIN WESTWARD, p. 66.
TEXAS, State of. Included in Section IX, p. 60.
THE DISTRIBUTION OF THE MAGNETIC DECLINATION IN THE UNITED STATES FOR THE EPOCH 1890. Appendix No. 11, pp. 233-402.
THE NEED OF A REMEASUREMENT OF THE PERUVIAN ARC. Appendix No. 7, pp. 199-208.
THEODOLITES (new). Construction of, p. 139.
THE RELATION BETWEEN THE METRIC STANDARDS OF LENGTH OF THE UNITED STATES COAST AND GEODETIC SURVEY AND THE UNITED STATES LAKE SURVEY. Appendix No. 6, pp. 179-197.
THOMAS, C. M., LIEUTENANT-COMMANDER U. S. N., ASSISTANT. Hydrographic surveys in Stephens and in Cleveland Passages and vicinity, and in Portland canal and vicinity, southeastern Alaska, pp. 78-82. Assigned to duty as Hydrographic Inspector, p. 82. Reference to, pp. 18, 164, 165, 175, 176.
THOMAS, MISS MARY. Chart Division, p. 147.
THOMPSON, H. L. Engraving Division, pp. 134, 136, 137.
THOMPSON, J. G. Engraving Division, pp. 134, 136, 137.
THOMPSON, W. A. Engraving Division, pp. 134, 136.
THORPE, DR. Reference to, p. 84.
TIA JUANA LAGOON, p. 61.
TIFFANY, J. McC. Service on steamer *Bache* and schooner *Spy*, pp. 50, 53.
TIDAL AND CURRENT OBSERVATIONS, DUPLICATE RECORDS. Number of volumes, p. 112.
TIDAL AND CURRENT OBSERVATIONS, ORIGINAL RECORDS. Number of volumes, p. 112.
TIDAL BENCH-MARKS. Reference to, p. 141.
TIDAL CURRENTS. In Annapolis Harbor, p. 41. In Cobscook Bay, Maine, p. 21.
TIDAL DIVISION. Annual report of, pp. 141, 142.
TIDAL DIVISION, ANNUAL REPORT OF. Reference to, p. 97.
TIDAL RECORD CONTINUED AT THE AUTOMATIC TIDAL STATION, ST. PAUL, KADIAK ISLAND, ALASKA, pp. 82, 83.
TIDAL STATIONS FOR WHICH REDUCTIONS HAVE BEEN MADE, p. 112.
TIDE GAUGES. At Allan Island, Chuckanut Bay, Utsalady and Eagle Harbor, Cypress Island, Washington Territory, p. 77; at Annapolis, Md., p. 41; at Astoria, Oregon, p. 73; at Atchafalaya Bay, La., p. 59; at Boston, Mass., p. 25; at Cape Cod and Buzzard's Bay, p. 25; at Crescent City, Cal., p. 70; at Fisherman's Inlet, p. 45; at No Man's Land, p. 31; at Saucelito, Cal., p. 70; at Ship Shoal Light-house, Louisiana, p. 59; at Steinhatchee River, Florida, p. 52; at Tybee Island, Georgia, p. 48; at Wasque Bluff, p. 31; at West Brighton pier, Coney Island, p. 36; in Delaware and Schuylkill Rivers, in connection with resurveys, p. 38; in Nantucket and Vineyard Sounds, p. 29; in vicinity of Cape Charles, Virginia, used in connection with hydrographic survey, p. 45; on coast of Florida, p. 50.
TIDE NOTES. Reference to, p. 141.
TIDE OBSERVATIONS. At Annapolis, Md., in connection with hydrographic resurvey, p. 41; at Atchafalaya Bay, Louisiana, p. 59; at Coney Island, p. 36; at Halibut Bay, Ford's Cove, and Winter Harbor, in connection with hydrography of Portland Canal and vicinity, p. 81; at No Man's Land, in connection with hydrographic survey, p. 31; at Santa Ana River and Newport Landing, California, p. 64; at Saucelito, California, p. 70; at Ship Shoal light-house, Louisiana, p. 59; at Somerville Bay, in connection with hydrography, p. 81; at Steinhatchee River, Florida, in connection with hydrography, p. 52; at Taku Harbor, Alaska, p. 79; at Tybee Island, Georgia, p. 48; in Cleveland Passage, Alaska, in connection with hydrography, p. 82; in connection with hydrography at Crescent City, Cal., pp. 70, 71; in connection with hydrography on coast of Washington Territory, p. 77; in connection with physical hydrography of Cape Cod Peninsula, pp. 23, 24; in northwest channel, Key West, by U. S. Engineers, p. 52; on coast of Florida, in connection with hydrographic surveys, p. 50; on Pacific coast, pp. 66, 67.
TIDE RIPS. At entrance to Port Snettisham and Holkam Bay, Alaska, p. 80.
TIDES. In Stephens Passage, Alaska, p. 80. On coast of Florida, p. 50.
TIDE TABLES FOR THE ATLANTIC AND PACIFIC COASTS FOR YEAR 1890. Reference to, pp. 97, 141, 143, 144, 145.
TILLMAN, E. H., ENSIGN, U. S. N., ASSISTANT. Services in Hydrographic Division, p. 18. Submits annual report of Coast Pilot Division, p. 19. In charge of Hydrographic Division, pp. 165-167. In charge of Coast Pilot Division, p. 166-174; reference to, pp. 175, 176.
TIME. Determined at West Base, Louisiana, p. 58.
TISDALE, R. D., ENSIGN, U. S. N. Service on schooner *Eagre* p. 30. Service on steamer *Bache* and schooner *Spy*, pp. 50-52. Reference to, pp. 175, 176.
TITTMANN, O. H., ASSISTANT. In charge of office of Weights and Measures, p. 98; reference to, pp. 121-125; annual report of, pp. 159, 160; report by, in co-operation with Assistant Schott, Appendix No. 6, pp. 179-197.
TOLLEY, J. B. Services in Massachusetts, p. 26.
TONGUE POINT AND TANSY POINT. Resurveys and examination of changes in vicinity of, pp. 72, 73.
TOPOGRAPHICAL PARTIES. Number of, p. 112.
TOPOGRAPHICAL RECONNAISSANCE OF THE COAST OF OREGON BETWEEN ROGUE RIVER AND CAPE SEBASTIAN COMPLETED. TOPOGRAPHICAL SURVEY OF THE OREGON COAST BETWEEN KOOS BAY AND THE UMPQUAH RIVER FINISHED, pp. 71, 72.
TOPOGRAPHICAL RESURVEY OF ANNAPOLIS HARBOR AND ROADS, p. 40.
TOPOGRAPHICAL RESURVEY OF SHORE LINE AND ADJACENT DETAILS IN WOOD'S HOLL AND ON THE ISLANDS IN ITS IMMEDIATE VICINITY, pp. 33, 34.
TOPOGRAPHICAL RESURVEY OF THE ELIZABETH ISLANDS, OFF THE COAST OF MASSACHUSETTS, p. 34.
TOPOGRAPHICAL SURVEY OF THE NORTH BRANCH OF COBSCOOK BAY, MAINE, pp. 20, 21.
TOPOGRAPHICAL SURVEY OF THE WEST COAST OF FLORIDA BETWEEN CAPE SABLE AND PAVILION KEY, p. 51.
TOPOGRAPHICAL SURVEYS AND RESURVEYS. Of the west bank of the St. Croix River, p. 20; of Cobscook Bay, Maine, pp. 20-22; of new inlet into Cotamy Bay, Martha's Vineyard, p. 26; on coast of Massachusetts (supervision of), pp. 26-28; on Nantucket and Martha's Vineyard Islands, pp. 28-29; of north and south shores of Martha's Vineyard and shore line of No Man's Land, pp. 32-33; of Wood's Holl and adjacent islands, pp. 33-34; of Elizabeth Islands, coast of Massachusetts, p. 34; on coast of Long Island, p. 35; of Delaware River, p. 38; of Schuylkill River, pp. 38-39; of Annapolis Harbor and Roads, p. 40; of the District of Columbia, pp. 41-45; of the west coast of Florida between Cape Sable and Pavilion Key, p. 51; of Pensacola Bay and its branches, Florida, pp. 54-55; of the south coast of California from Del Mar to beyond Oceanside, pp. 62-63; on coast of California from Cape San Martin westward, p. 66; of the coast of Oregon, pp. 71-72; of Columbia River, Oregon, pp. 72-73; on inland waters of Washington Territory, pp. 75-76; of the Gulf of Georgia, pp. 77-78.
TOPOGRAPHIC AND HYDROGRAPHIC RESURVEY OF THE SCHUYLKILL RIVER FROM FAIRMOUNT DAM TO THE DELAWARE RIVER, pp. 38-39.
TOPOGRAPHIC AND HYDROGRAPHIC SHEETS. Registered in the Archives during the fiscal year, pp. 151-153.
TOPOGRAPHIC MAPS, ORIGINALS. Statistics of, p. 112.
TOPOGRAPHIC RESURVEY OF PARTS OF THE NORTH AND SOUTH SHORES OF MARTHA'S VINEYARD; ALSO OF THE SHORE LINE OF NO MAN'S LAND, pp. 32-33.
TOPOGRAPHIC SHEETS. Of coast of California, p. 66; of coast of Oregon, pp. 71, 72; of coast of Washington Territory, pp. 76, 78; of Cobscook Bay, Maine, p. 20; of Long Island, New York, p. 35; of Pensacola Bay and branches, p. 55; of Portland Canal and vicinity, p. 81; of southern California, p. 63; of West Quoddy Bay, Maine, referred to, p. 22; received and registered list of, pp. 151-152; vicinity of Wood's Holl, Mass., p. 33.
TORREY, E. E. Service in Ohio and Indiana, p. 85; service on coast of Florida, p. 53.
TOPOGRAPHY, statistics of, pp. 111-112.
TRADE WIND. Its apparent effect on surface currents, p. 48.
TRANSIT (schooner). Use of, and reference to, pp. 53, 165, 177.
TRANSIT INSTRUMENTS. Description of two new portable. Appendix No. 9, pp. 213-216; report concerning, p. 92.
TRESCOT, E. A. Drawing Division, pp. 127, 130, 131, 132.
TREASURY, SECRETARY OF, p. 100.
TREMONT, MASS., p. 25.

TRIANGULATION. Of the St. Croix River and of the lakes near its head towards the northeastern boundary, pp. 19, 20; to determine town boundaries in Massachusetts, pp. 25, 26; on the south coast of Long Island, p. 34: in northeastern Pennsylvania, pp. 37, 38; in vicinity of Charleston, S. C., and up the Cooper, Ashley, and Wando Rivers, pp 47, 48; of Perdido Bay and connection with Pensacola Bay, Florida, pp. 53, 54; of Pensacola Bay, Florida, and its branches and connection with Perdido Bay, pp. 54, 55; in Alabama, p. 55; of Atchafalaya River, Louisiana, p. 57; on coast of Louisiana, pp. 57–59; on coast of California from Cape San Martin westward, p. 66; in Washington Territory, pp. 75, 76; of the Gulf of Georgia, pp. 77, 78; in Tennessee, pp. 83, 84; in Ohio and Indiana, pp. 84, 85; in Wisconsin, p. 86; in Minnesota, pp. 87, 88; in Kansas, pp. 88, 89; in Utah, pp. 90, 91.
TRIANGULATION. Original records, Number of volumes, p. 112.
TRIANGULATION. Statistics of, p. 111.
TRIANGULATION AND LEVELING PARTIES. Number of, 111.
TRIANGULATION AND TOPOGRAPHY OF SARATOGA PASSAGE, PENN'S COVE, OAK HARBOR, CRESCENT HARBOR, AND SKAGIT BAY, WASHINGTON TERRITORY, pp. 75, 76.
TRIANGULATION AND TOPOGRAPHY OF THE GULF OF GEORGIA, INCLUDING LUMMI, BIRCH, AND SEMIAHMOO BAYS, pp. 77, 78.
TRIANGUBATION IN THE STATE OF NEW YORK. Reference to, p. 37.
TRIANGULATION IN THE VICINITY OF CHARLESTON, S. C., AND UP THE COOPER, ASHLEY, AND WANDO RIVERS, pp. 47, 48.
TRIANGULATION MARKS. In Utah, p. 90.
TRIANGULATION OF PERDIDO BAY AND ITS CONNECTION WITH THE TRIANGULATION OF PENSACOLA BAY, FLORIDA, pp. 53, 54.
TRIANGULATION OF THE ATCHAFALAYA RIVER, LOUISIANA, p. 57.
TRIANGULATION ON THE SOUTH COAST OF LONG ISLAND, COMPLETED FROM GREAT SOUTH BAY TO NAPEAGUE BAY, pp. 34, 35
TRIANGULATION, TOPOGRAPHY, AND HYDROGRAPHY IN PENSACOLA BAY AND BRANCHES; TRIANGULATION BETWEEN PENSACOLA AND PERDIDO BAYS, pp. 54, 55.
TRINIDAD, COLO. Magnetic elements observed and azimuth determined, p. 92.
TRIPP (Jennings Co.). Triangulation station in Indiana, p. 85.
TROUTMAN, L. H. Printing room, p. 135.
TRURO, MASS., p. 24.
TURNBULL, MISS C. B. Office of assistant in charge, pp. 99, 123.
TURNER, J. H., SUBASSISTANT. Preliminary survey of the frontier line between Alaska and British Columbia, p. 83; service in Utah, pp. 90, 91; organization of parties to make a preliminary determination of the boundary line between Alaska and British Columbia, pp. 94, 95; reference to, pp. 67, 70.
TYBEE, ISLAND, GEORGIA. Tide observations at, p. 48.
TYBEE LIGHT, p. 48.

U.

UMATILLA REEF, p. 75.
UNCATENA ISLAND, MASS. Topographical survey of, p. 33.
UNION PACIFIC RAILROAD. Reference to, p. 92.
UNITED STATES COAST PILOT, PART IV, LONG ISLAND SOUND, WITH APPROACHES AND ADJACENT WATERS. Reference to, pp. 166, 173.
UNITED STATES COAST PILOT, PART VI, CHESAPEAKE BAY AND TRIBUTARIES. Reference to, p. 166.
UNITED STATES ENGINEERS. Reference to, p. 73.
UNITED STATES GEOLOGICAL SURVEY. Reference to, p. 92.
UNITED STATES QUARANTINE COMMISSION. Reference to, p. 100.
UNITED STATES MARINE HOSPITAL, PORT TOWNSEND, WASH., pp. 73, 74.
UNITED STATES MILITARY RESERVATION, SAN ANTONIO, TEX. Selected as site for magnetic observatory, p. 60.
UPPERMAN, A. Chart Division, p. 147.
URIE, J. F., ASSISTANT SURGEON, U. S. N., pp. 175, 176.
UTAH, TERRITORY OF. Included in Section XVI, p. 90.
UTSALADY HARBOR, WASHINGTON TERRITORY, p. 75.

V.

VANDERBILT UNIVERSITY, NASHVILLE, TENN. Magnetic observations at, p. 84.
VAN DOREN, W. A. Engraving Division, pp. 134, 137.
VAN DUZER, L. S., ENSIGN, U. S. N. Service on schooner *Eagre*, pp. 30, 32, 36; reference to, pp. 175, 176.
VAN ORDEN, C. H., ASSISTANT. Continuation of the determinations of town boundary lines in the State of Massachusetts, pp. 25, 26.
VERDI, NEV. Longitude of, determined, p. 92.
VERMILION BAY, LOUISIANA, p. 58.
VERMONT, State of, included in Section I, p. 19.
VERIFICATION, REVISION, AND CORRECTION OF REDUCED DRAWINGS OF HYDROGRAPHY FOR THE FISCAL YEAR ENDING JUNE 30, 1889. Tabular statement of, pp. 171, 172.
VERY, LIEUTENANT, U. S. N. Aid received from, p. 40.
VESSELS of the Coast and Geodetic Survey. List of, p. 177.
VICTORIA, BRITISH COLUMBIA, p. 78.
VIERBUCHEN, P. Instrument Division, p. 139.
VILLAGE POINT, LUMMI ISLAND, WASHINGTON TERRITORY, p. 77.
VILLA RIDGE, ILL., p. 86.
VINAL, W. I., ASSISTANT. Topographical resurvey of shore line and adjacent details in Wood's Holl and on the islands in its immediate vicinity, pp. 33, 34; service in Drawing Division, p. 128; reference to, pp. 27, 32.
VINEYARD SOUND, p. 26.
VINITA, INDIAN TERRITORY. Magnetic observations at, p. 60
VIRGINIA, State of. Included in Section III, p. 40.
VIXEN (steam launch). Use of, and reference to, p. 79.
VON LOGAU, L. Engraving Division, p. 136.

W.

WADDILL, MRS. J. Office of Assistant in Charge, pp. 99, 123.
WAINWRIGHT, D. B., ASSISTANT. Continuation of the detailed topographical survey of the District of Columbia, pp. 42, 43.
WALES PASSAGE. Survey of, p. 80.
WALKER, LIEUTENANT-COMMANDER, U. S. N. Aid received from, p. 40.
WANDO RIVER, SOUTH CAROLINA, p. 47.
WARRINGTON, FLA., p. 53.
WASHINGTON SOUND, p. 78.
WASHINGTON TERRITORY. Included in Section XI, p. 71.
WASQUE BLUFF, p. 30. Tide-guage at, p. 31.
WASSERBACH, T. Engraving Division, pp. 134, 136, 137.
WATER-FRONT OF SEATTLE, WASH. Resurvey of, recommended, p. 74.
WATERMAN, R. H., GOVERNOR OF CALIFORNIA, p. 68.
WATER SUPPLY. In Southern California, p. 62.
WEBER RIVER, UTAH, p. 91.
WEC-QUOBSKA CLIFFS, pp. 32, 33.
WEDEKIND, E. H. Services in physical hydrography, p. 23.
WEED PATCH. Triangulation station in Indiana, p. 85.
WEIGHTS AND MEASURES, OFFICE OF. Annual report of, pp. 159, 160; reference to work of, p. 98.
WEIR, JOHN B., ASSISTANT. Service in connection with survey of Perdido Bay, p. 53; reference to, p. 86; service in office of Weights and Measures, pp. 99, 159.
WELKER, P. A., SUB-ASSISTANT. Survey of portions of Pensacola Bay, pp. 53, 54; triangulation, topography, and hydrography in Pensacola Bay and branches; triangulation between Pensacola and Perdido Bays, pp. 54, 55; service in Arkansas, p. 56; services in Illinois and Tennessee, p. 86; survey for the Commission appointed to select a site for a Navy-yard on the Gulf of Mexico and South Atlantic coasts, p. 93.
WELLS, FARGO & CO. Reference to, p. 92.
WEOGUFKA. Triangulation station in Alabama, p. 55.
WEST BASE, ARGENTA, ARK. Bench-mark at, p. 56.
WEST BASE, LOUISIANA. Azimuth observed at, p. 58; latitude determined at, p. 58; time determined at, p. 58.
WEST BREWSTER. Triangulation station in Massachusetts, p. 25.
WESTDAHL, FERDINAND, Draughtsman. Service in Los Angeles base measurement, pp. 64, 65; reference to, pp. 67, 100; service on coast of Oregon, p. 72.
WESTHAMPTON, LONG ISLAND, p. 26.
WEST LAS ANIMAS, COLO. Magnetic observations at, p. 92.

WEST PEMBROKE, MAINE. Included in topographical survey, p. 22.
WEST QUODDY BAY, MAINE. Topographical sheet of, p. 22.
WEST SEATTLE, WASHINGTON TERRITORY, p. 74.
WEST TISBURY, MASS., p. 29.
WEST VIRGINIA. State of, included in Section III, p. 40.
WEST, WILLIAM. Messenger, pp. 140, 146.
WHEELER, G. M., LIEUTENANT, U. S. ENGINEERS, p. 92.
WHIDBEY ISLAND, WASHINGTON TERRITORY, pp. 75, 76.
WHITAKER, J. W. Tidal Division, p. 141.
WHITE, W. W., ASSISTANT ENGINEER, U. S. N. Service on steamer *Blake*, pp. 46, 49; reference to, pp. 175, 176.
WHITE CITY. Triangulation station in Kansas, p. 89.
WHITING, H. L., ASSISTANT. General direction of town boundary surveys in Massachusetts, p. 25; report by. Appendix No. 14, pp. 459, 460; resurvey of the new inlet into Cotamy Bay, Martha's Vineyard, p. 26; supervision and inspection of topographical resurveys on Martha's Vineyard, No Man's Land, Naushon, in the vicinity of Wood's Holl, and on the southeasterly part of Long Island, pp. 26-28; additions of topographical details to the original surveys of Nantucket and Martha's Vineyard Islands, pp. 28, 29; reference to, pp. 32, 33.
WHITING, ROBERT, PASSED ASSISTANT SURGEON, U. S. N. Service on steamer *Patterson*, p. 78; reference to, p. 175.
WHITNEY ISLAND, ALASKA, p. 82.
WICHITA, KANS. Magnetic observations at, p. 88.
WILKES BARRE, PA., p. 37.
WILLENBUCHER, EUGENE, hydrographic draughtsman, pp. 18, 123, 167, 169, 170, 171, 172.
WILLENBUCHER, W. C., hydrographic draughtsman, pp. 18, 123, 167, 169, 170, 171, 172, 173; service on Steamer *Endeavor*, p. 41.
WILLS, E. B. Accounting Division and office of Assistant in Charge, pp. 98, 157, 158.
WILSON, LOUIS. Tide observer at Astoria, Oregon, p. 73.
WILSON HOTEL, CISCO, TEX., p. 60.
WINDOM, WILLIAM. Secretary of the Treasury, p. 100.
WINDWARD CHANNEL. Current observations in the, p. 48.
WINDWARD ISLANDS. Reference to, p. 48.
WINES, M. W. General office assistant, in charge of Miscellaneous Division, pp. 97, 98; reference to, p. 121; annual report of, pp. 143-146.
WINSLOW, FRANCIS, LIEUTENANT, U. S. N., ASSISTANT. Supplementary work incidental to the special hydrography for the State of North Carolina, pp. 46, 47; reference to, pp. 162, 175.
WINSOR, HENRY & CO. Acknowledgment of aid received from, p. 39.
WINSTON, ISAAC, SUB-ASSISTANT. Extension of the line of levels of precision from Little Rock, Ark., towards the western boundary of the State, p. 56; construction of buildings for a self-registering magnetic station at San Antonio, Texas, pp. 60, 61; geodetic leveling, from near Cairo, Ill., across western Kentucky and Tennessee, p. 83; lines of geodetic leveling carried from near Cairo, Ill., towards the Gulf of Mexico, pp. 85, 86; engaged in office work, p. 91.
WIRE MEASUREMENT (over water). Of base line in Stephens Passage, Alaska, p. 79.
WISCONSIN. State of, included in Section XIV, p. 84.
WOOD, ALBERT N., ENSIGN, U. S. N. Service on steamer *Patterson*, pp. 78, 79.
WOOD, M. L., LIEUTENANT, U. S. N., ASSISTANT IN CHARGE HYDROGRAPHIC DIVISION. Hydrographic resurvey of Annapolis Harbor and approaches, p. 41; hydrographic resurveys and examinations in the vicinity of Cape Charles, Va., p. 45; reference to, pp. 18, 40, 162, 165, 169, 174, 175, 176.
WOOD, S. S., ENSIGN, U. S. N. Service on steamer *Patterson*, pp. 78, 79; reference to, p. 175.
WOODENBALL ISLAND, MAINE. Reference to, p. 23.
WYOMING. State of, included in Section XVII, p. 92.
WYVILL, E. H. Hydrographic draughtsman, pp. 19, 167, 173.

## Y.

Y. AND M. METRE NO. 1. Reference to, p. 160.
YOLO BASE. Reference to, p. 64.
YOUNG, F. A., RECORDER. Service on coast of Florida, p. 55; services in Arkansas, p. 56; services in Illinois and Tennessee, p. 86.
YOUNG, WILLIAM P., laborer, p. 146.
YOUNG'S BAY, OREGON, p. 72.
YOUNG'S RIVER, OREGON, p. 72.
YUCATAN. Reference to, p. 49.
YUKON (schooner). Use of and reference to, pp. 74, 75, 76, 93, 177.
YUKON RIVER, ALASKA, p. 94.

## Z.

ZEAN DALE (Riley Co.). Triangulation station in Kansas, p. 89.

## ERRATA.

*Coast and Geodetic Survey Report for* 1889.

Page 5, nineteenth line from top, for *page* 10 read *page* 6.
Page 6, twenty-eighth line from top, for *several* read *seven*.
Page 37, twenty-eighth and thirty-second lines from top, for *Pamlico* put *Pamplico*.
Page 38, second line from bottom, for *Fairmont* read *Fairmount*.
Page 39, fifth line from top, make same correction.
Page 50, sixth line from bottom, for *Blake* put *Bache*.
Page 52, twentieth line from bottom, for *Cedar Keyes* put *Cedar Keys*.
Page 53, fourteenth line from bottom, for *Washington* read *Warrington*.
Page 66, twenty-first line from bottom, for *summitt* put *summit*.
Page 76, eleventh line from top, for *Goedetic* read *Geodetic*.
Page 123, sixth line from top, for *Ayers* read *Ayres*.
Page 135, eighteenth line from bottom, for *Crawford* put *Craufurd*.

# REPORT.

UNITED STATES COAST AND GEODETIC SURVEY OFFICE,
*Washington, December* 14, 1889.

SIR: As required by law and by the regulations of the Treasury Department, I have the honor to submit herewith a report of the progress and state of the work of the Coast and Geodetic Survey during the fiscal year ended June 30, 1889, with a view to the same being laid before the President and the Congress.

Having received from the President on the 9th of July, 1889, the appointment as Superintendent of the Coast and Geodetic Survey, and having immediately thereafter entered upon the active duties of the position, I am able, at the date of presenting this report, to express my belief, based upon close observation of the operations of the Office and upon personal inspection of parties in the field, that the survey, as a working organization, has reached a high degree of efficiency. It will be my effort to maintain its high standard, and to advance its operations in the directions pointed out by the increasing magnitude of the maritime and commercial interests involved, and by the just demands of geographical science.

The two maps of general progress (Nos. 1 and 2) which accompany this report show graphically the areas covered by the several classes of work upon the Atlantic and Pacific coasts, and in the interior at the close of the last fiscal year. The general chart of Alaska (progress sketch, No. 13) is based upon the results of the latest surveys. In Appendix No. 1 is given in tabular form, and in a geographical order, southward along the Atlantic coast, northward along the Pacific, and from east to west in the interior, a statement of the distribution of the parties ashore and afloat, the kind of work and the localities where prosecuted.

Part I of the report presents a brief summary of general statements of progress under the heads of Field Work (including Special Operations), Office Work, Discoveries and Developments, Bulletins, and Special Scientific Work, concluding with an explanation of estimates for the fiscal year 1891, and a statement of those estimates in detail.

Part II begins with an introductory statement relating mainly to the offices of the Assistant in charge of Office and the Hydrographic Inspector, followed by abstracts from the reports of field-work made by chiefs of parties, arranged in the geographical order indicated in Appendix No. 1. Notices of special operations, an abstract of the report of Office work and of the work of the Sub-offices at Philadelphia and San Francisco follow. A statement by the Superintendent concludes this part of the report.

Part III contains the appendices to the report. Appendices Nos. 1 to 5, inclusive, give the distribution of field parties, the statistics of the field and office work of the Survey, lists of information furnished in response to official calls and to individuals upon application, and the annual reports of the Assistant in charge of the Office and the Hydrographic Inspector. The remaining appendices present results of the work or descriptions of its methods and processes, such as are in frequent requests from surveyors and engineers, geographers and navigators.

# PART I.

During the past fiscal year, field operations comprising triangulation and topography, astronomical and magnetic and gravity work, and spirit-leveling of precision, were carried on within the limits or on the coasts of twenty-six States, six Territories, and in the District of Columbia. Hydrographic surveys, including in-shore and off-shore soundings, observations of tides, of currents and of ice movements, and researches in physical hydrography relating to harbors and bars, were prosecuted in the waters or off the coasts of fifteen States and two Territories.

Geodetic operations in co-operation with State geological or topographical surveys were carried on in the States of Massachusetts, Pennsylvania, Tennessee, Arkansas, Wisconsin, and Minnesota.

In compliance with a provision in the Sundry Civil Expenses act of March 2, 1889, two parties in command of officers of the Survey left San Francisco in June last for Alaska, charged with making the observations and measurements needed to determine provisionally the boundary line between Alaska and British Columbia. A joint resolution of the Congress having authorized the President to appoint a delegate, who should be an officer of the Survey, to represent the United States at the meeting this year of the International Geodetic Association at Paris, action was taken accordingly by the President on the 28th of February, and the officer so designated has attended the meeting. It will be seen by his report, which will be published as Appendix No. 18, to this volume, that the views which he was instructed to present to the Association were not without a marked influence upon its proceedings.

By direction of the Secretary of the Treasury, and on the request of the Secretary of the Navy, officers of the Survey were detailed to co-operate with the Commission to select a site for a Navy Yard on the Gulf of Mexico and South Atlantic Coasts, and with the Commission appointed to examine the coasts north of the forty-second parallel in the State of Oregon, and in the Territories of Washington and Alaska, with a view of selecting a suitable site for a Navy Yard.

An exhibit was made by the Survey in connection with exhibits by other Bureaus of the Treasury Department at the Cincinnati Exposition in the summer and autumn of 1888.

## GENERAL STATEMENT OF PROGRESS.

### I.—FIELD-WORK.

ATLANTIC COAST.—Upon and off the coasts, and within the borders of the New England States, field-work during the fiscal year ended June 30, 1889, included the following operations:

Continuation of the triangulation of the St. Croix River and of the Boundary Lakes towards the Northeastern Boundary; topographical surveys on the right bank of the St. Croix River and on Cobscook Bay, completing its topography; completion of the hydrography of Cobscook Bay; off-shore hydrography between Matinicus Island and Seguin Island, and hydrographic examination off Nash Island, coast of Maine; continuation of the survey of the coast of Cape Cod peninsula from the vicinity of Chatham to the northward for the development of its physical

hydrography; progress made in the determination of town boundary lines in Massachusetts; off-shore hydrography between Nantucket Shoals and the eastern limits of George's Bank; hydrographic resurvey of the approaches to Nantucket and Martha's Vineyard, and of Nantucket and Vineyard Sounds; additions of topographical details to the original surveys of Martha's Vineyard; shore line resurveys on Martha's Vineyard, on the Elizabeth Islands, and in the vicinity of Wood's Holl, Mass., and determinations of the geographical positions of light-houses in Narragansett Bay and approaches.

Field operations upon and off the coasts, and within the limits of the States of New York, New Jersey, Pennsylvania, and Delaware, included the completion of the triangulation of the south coast of Long Island from Great South Bay to Napeague Bay; the completion of shore-line resurveys on the south coast of Long Island, including Three-Mile Harbor, Moriches Bay, and the outer beach; hydrographic examination of the entrance into Jamaica Bay, south coast of Long Island; observations of currents between Nantucket and Cape Hatteras; establishment of meridian lines and standards of length at Binghamton, N. Y., and Montrose, Pa.; observations of currents in New York Bay and Harbor; continuation of tidal observations at the automatic tidal station at Sandy Hook, New Jersey; continuation of the triangulation in northeastern Pennsylvania required to complete the Pamlico-Chesapeake-Lake Ontario arc of the meridian; corrections and additions to the topographic and hydrographic surveys of the Delaware and Schuylkill Rivers, made necessary by changes which had occurred since former surveys, and continuation of the observations of the formation and movement of ice in Delaware River and Bay.

Within the District of Columbia, and upon and off the coasts and within the boundaries of the States of Maryland, Virginia, North and South Carolina, and Georgia, field operations have included a topographic and hydrographic resurvey of the harbor of Annapolis and approaches; connection by geodetic leveling of tidal bench-marks at Annapolis; continuation of the topographical survey of the District of Columbia and the establishment of permanent bench-marks for the levels of that survey; location of new wharves on the Potomac River for additions to the charts; hydrographic resurveys and examinations in the vicinity of Cape Charles, Virginia; observations of currents between Cape Hatteras and Nantucket; special hydrographic surveys and examinations for the State of North Carolina; triangulation of the Ashley, Cooper, and Wando Rivers, South Carolina, and establishment of an automatic tidal station near Savannah, Ga.

The following operations were in progress or completed upon the east and west coasts of Florida, in the approaches to these coasts, and upon the coasts or within the limits of the States of Alabama, Arkansas, Louisiana, and Texas, and in the Indian Territory: Explorations of the Gulf Stream continued by observations of currents and temperatures in the Windward Island passages; hydrographic surveys in the Bay of Florida continued; topographical survey of the west coast of Florida completed from Cape Sable to Pavilion Key; resurveys of Pensacola and Perdido Bays begun; special surveys and examinations for the Naval Commission, organized to select a site for a navy-yard on the Atlantic and Gulf coasts; primary triangulation in Alabama advanced towards a connection with the triangulation on the coast of the Gulf of Mexico; lines of leveling of precision carried from Little Rock to Fort Smith, Ark.; magnetic stations occupied in Louisiana; continuation of the triangulation and hydrography of the coast of Louisiana, west of the Mississippi River; stations for the determination of the magnetic elements occupied in Texas and the Indian Territory, and station at San Antonio, Tex., prepared for the reception of the self-registering magnetic apparatus to be transferred to that point from Los Angeles, Cal.

PACIFIC COAST.—Upon and off the coasts and within the boundaries of the States of California and Oregon, of Washington Territory, and of Alaska, field operations have included hydrographic surveys in San Diego Bay and vicinity; continuation of the topographical survey of the coast of California between Point La Jolla and San Juan Capistrano; hydrographic surveys in the vicinity of San Onofre, and thence to Newport Landing, and examination of shoal off Point Fermin; measurement of primary base line at Los Angeles, Cal.; continuation of magnetic record at the self-registering magnetic station at Los Angeles; continuation of the tertiary triangulation and topography of the coast of California from Cape San Martin to the westward and northwestward;

establishment of a meridian line and standard of length in Golden Gate Park, San Francisco; continuation of tidal record at the automatic tidal station, Saucelito, San Francisco Bay; determination of the magnetic elements at the station Presidio of San Francisco, and at five other stations in California; hydrographic examinations in Mission Bay, San Francisco Harbor, and in Hospital Cove, Angel Island, Bay of San Francisco; determination of longitudes of stations in California, by exchanges of telegraphic signals; hydrographic examinations at Crescent City, Cal.; topographical reconnaissance of the coast of Oregon between Cape Sebastian and Rogue River completed; hydrographic survey begun from Cape Orford to the southward; completion of the topographic survey of the Oregon coast between Koos Bay and the Umpquah River; special surveys and examinations made for the commission appointed to examine the coast north of the forty-second parallel in the State of Oregon, and in the Territories of Washington and Alaska, with a view of selecting a site for a navy-yard; resurveys of shore-line and hydrography near Columbia River entrance between Tongue Point and Tansy Point, and in Young's Bay; determinations of longitude in Oregon and Washington Territory by exchanges of telegraphic signals; special survey of the water front at Seattle, Washington Territory; hydrographic surveys in the vicinity of Cape Flattery, and in Neeah Bay, Washington Territory; triangulation and topography of Saratoga Passage, Penn's Cove, Oak Harbor, Crescent Harbor, and Skagit Bay, Washington Territory; hydrographic surveys in Saratoga Passage, Skagit Bay, Rosario Strait, Bellingham Bay, and the Gulf of Georgia; triangulation and topography of the coasts of Washington Sound and waters connecting herewith; continuation of the automatic tidal record at St. Paul, Kadiak Island, Alaska; hydrographic surveys continued in Stephens' Passage and vicinity, and special survey made of Portland Canal and Pearse Channel, southeastern Alaska.

INTERIOR STATES.—In the States between the Atlantic and Pacific coasts the following field operations were in progress: Magnetic observations at stations in Ohio, Indiana, Illinois, and Wisconsin; reconnaissance and signal building for the primary triangulation advancing to the eastward in Indiana; geodetic operations in the State of Wisconsin; geodetic leveling from near Cairo, Ill., across western Kentucky, to near Greenfield, Tenn.; geodetic operations for the connection of the triangulation of the State of Tennessee with the primary triangulation in northern Georgia and Alabama; primary triangulation near the thirty-ninth parallel advanced to the eastward in Kansas; magnetic observations at stations in Iowa, Kansas, and Nebraska; base line measured and geodetic operations continued in the State of Minnesota; transcontinental triangulation extended to the eastward in central Utah; magnetic observations made at stations in Colorado and New Mexico, and longitudes determined in the Territory of Montana by exchanges of telegraphic signals.

Special operations during the year included the preparations needed for the dispatch of two field parties to the points of crossing of the one hundred and forty-first meridian of west longitude with the Yukon and Porcupine Rivers, in Alaska, to begin a preliminary determination of the boundary line between Alaska and British Columbia; the co-operation of the survey with the Naval Commission to select sites for Navy Yards on the Atlantic, Gulf, and Pacific coasts; the detail of an officer of the survey to take charge of the exhibit made by it at the Cincinnati Exposition, and the appointment of an officer of the Survey to represent the United States at the annual meeting of the International Geodetic Association.

## II.—OFFICE WORK.

In the office special effort was continued to present the results of field work at the earliest date practicable, and to render them accessible to the people and to the Government in the forms hitherto found most useful.

The steadily increasing demand for the publications of the Survey is shown by the large increase from year to year in the number of copies of charts, Coast-Pilot volumes, Tide Tables, and Notices to Mariners, required to meet the needs of commerce and navigation. There were issued during the year forty-nine thousand three hundred and twelve copies of charts, an increase of seven thousand copies over the number issued in the fiscal year 1888, and of fourteen thousand two hun-

dred and ninety-six copies over the number issued in the fiscal year 1887. Of this number twenty-eight thousand two hundred and twenty-four copies were sent to agents for sale; three thousand five hundred and sixty-one copies were issued to the Congress, and sixteen thousand three hundred and sixty-four copies to the Executive Departments. For foreign Governments, seven hundred and forty-one copies were required.

Forty-nine charts were published; thirteen of these were from engraved plates, and thirty-six from tracings or drawings reproduced by photolithography. There were published twenty-two new editions of charts; of these eight were from engraved plates, and fourteen were photolithographed. Great care was taken to have all charts issued from the office corrected to date for changes in lights, buoys, and other aids to navigation.

Tide Tables predicting for 1890 the times and heights of high and low water for all the principal ports on the Atlantic and Pacific Coasts of the United States were prepared and sent to press during the year. The volume for the Atlantic coast was extended to include ports on the east coast of British America as far as the Straits of Belle Isle, and that for the Pacific coast to include ports in British Columbia. Full predictions were also made for the principal ports in Alaska.

The publication of a series of papers under the designation of Bulletins, begun during the preceding fiscal year, was continued. A further notice of these papers, with a list by title and date of publication appears on page 10.

Of the Annual Reports two thousand three hundred and ninety-five copies were distributed. There were received from the Public Printer four thousand five hundred extra copies of Appendices to the Annual Reports. The papers thus published describe the methods or discuss the results of the Survey and are furnished without cost to applicants.

In the annual reports of the assistant in charge of the office (Appendix No. 4 to this volume), and of the Hydrographic Inspector (Appendix No. 5) full details are given relating to the respective branches of office work directed by those officers. A summarized statement of office work in charge of the Hydrographic Inspector precedes Part II of this report, and an abstract of the report of the Assistant in charge of the Office will be found towards the close of that part.

## III.—DISCOVERIES AND DEVELOPMENTS.

The Notices to Mariners, the regular issue of which was at first quarterly, and since July, 1887, monthly, have become an indispensable supplement to the charts. Whenever discoveries or developments are made in the progress of the work of enough importance to mariners to demand immediate publication, special notices are issued. All corrections to charts, or changes made in them during the month, are fully given in the monthly notices. These changes or corrections may be due to changes in lights, buoys and beacons or other aids to navigation, to the development of new channels, or to changes caused by works of construction. Or they may be due to discoveries of dangers made in the course of the close resurveys of bays, harbors, and highways of commerce which the interests of navigation now demand.

Wide and free distribution is given to these Notices, and it is intended to supply copies of each issue to every Collector of Customs in the United States, and to all United States Consuls in foreign ports. In his annual report, the Hydrographic Inspector recommends that a weekly issue of the Notices be provided for as soon as satisfactory arrangements for prompt printing can be effected.

Thirteen Notices were issued during the year, and fifty thousand copies were printed. Following is an abstract of their contents and dates of issue:

No. 104 (July 31, 1888). Chart corrections during the month of July, 1888. New charts. New publications. General note and list of Index Maps to the charts.

No. 105 (Aug. 31, 1888). Chart corrections during the month of August, 1888. Chart condemned. New charts. Soundings in the West Indies. General note and list of Index Maps.

No. 106 (Sept. 30, 1888). Chart corrections during month of September, 1888. Charts condemned. Charts suspended. New charts. General note and list of Index Maps.

No. 107 (Oct. 31, 1888). Chart corrections during the month of October, 1888. Chart suspended. Chart condemned. New charts. New publications. General note and list of Index Maps.

No. 108 (Nov. 30, 1888). Chart corrections during the month of October, 1888. Charts condemned. New charts. New publications. General note.

No. 109 (Dec. 31, 1888). Chart corrections during the month of December, 1888. Charts, condemned. Chart suspended. New charts. New publication. General note. Index to the Notices published during the calendar year 1888.

No. 109 (Supplementary). Index to chart corrections from January 1 to December 31, 1888.

No. 110 (Jan. 31, 1889). Chart corrections during the month of January, 1889. Charts condemned. New charts. New publications. General note.

No. 111 (Feb. 28, 1889). Chart corrections during the month of February, 1889. Chart suspended. New charts. New publications. General note.

No. 112 (Mar. 31, 1889). Chart corrections during month of March, 1889. Charts condemned. New charts. New publications. General note.

No. 113 (Apr. 29, 1889). Chart corrections during month of April, 1889. Charts condemned. New charts. General note.

No. 114 (May 1, 1889). Off-shore current observations. Information of special importance to mariners.

No. 115 (May 31, 1889). Chart corrections during the month of May, 1889. Chart condemned. New chart. General note.

No. 116 (June 29, 1889). Chart corrections during the month of June, 1889. Charts condemned. New charts. New publications. List of above for the fiscal year. General note.

## IV.—BULLETINS.

The series of papers published under the head of Bulletins, the issue of which was begun towards the close of the fiscal year 1888, has fully answered the purpose for which it was intended; to give early announcement of work accomplished, or information of importance obtained, thus anticipating in many cases the usual means of publication afforded by the Annual Reports.

Several Bulletins were published during the year, and the whole number of copies printed for distribution was twenty-three thousand. Copies are furnished without charge to applicants. Following is a list giving titles, dates when approved for publication and when received from the printer:

| Title. | Approved for publication— | Received from printer— |
|---|---|---|
| No. 2. Notes on Alaska from recent surveys | June 20, 1888 | Aug. 9, 1888 |
| No. 3. Tidal levels and flow of currents in New York Bay and Harbor | Aug. 1888 | Oct. 6, 1888 |
| No. 4. Resources of and developments in Alaska | Oct. 1888 | Nov. 5, 1888 |
| No. 5. The value of the "Arcano del Mare" with reference to our knowledge of the magnetic declination in the earlier part of the seventeenth century | June 7, 1888 | Jan. 16, 1889 |
| No. 6. Secular variation in the position of the Agonic Line of the North Atlantic and of America between the epochs 1560 and 1900 A. D | June 7, 1888 | Jan. 18, 1889 |
| No. 7. Historical review of the work of the Coast and Geodetic Survey in connection with Terrestrial Magnetism | Dec. 11, 1888 | Jan. 31, 1889 |
| No. 8. Currents of New York Bay and Harbor | Feb. 18, 1889 | Mar. 23, 1889 |

## V.—SPECIAL SCIENTIFIC WORK.

### ON THE RELATION EXISTING BETWEEN THE METRIC STANDARDS OF LENGTH OF THE U. S. COAST AND GEODETIC SURVEY AND THE U. S. LAKE SURVEY.

The geodetic connection that has been made between the triangulation of the U. S. Coast and Geodetic Survey and that of the U. S. Lake Survey upon lines in the States of New York, Illinois, and Wisconsin, and the necessity of expressing the length of the lines determined by the Lake Survey in terms of a standard adopted by the Coast and Geodetic Survey, led Assistant Tittmann,

at the suggestion of Assistant Schott, to institute an elaborate series of comparisons between the standards of length in use on the two surveys, in order that the results deduced by the Lake Survey might be fully utilized by the Coast and Geodetic Survey.

In the report made by these officers (Appendix No. 6) they present an exhaustive discussion of the relative and absolute lengths of two primary standards, establishing with the utmost attainable accuracy the relation between the lengths of the Committee Metre (iron) of 1799, the standard for the Coast and Geodetic Survey, and the Repsold Metre (steel) of 1876, the standard for the Lake Survey. Occasion is taken also to determine the length of the Berlin Metre No. 49 (brass) of 1876, which has been used as a standard in gravity research.

Full descriptions of the apparatus and processes employed for the comparisons accompany the report, with a drawing of the optical beam compass comparator constructed after designs by the late H. W. Blair, Assistant, and intended to compare any line measures from a decimetre to a metre in length. Sketches showing the devices used to compare the Committee Metre, which is an end measure, with the Repsold Metre, a line measure, appear also. Records of the comparisons are given in full, and the report closes with a statement of the relation of the Committee Metre to the metre provisionally adopted as a standard by the International Standards Committee, and soon to be replaced by the National Metre Prototypes, for the reception of which arrangements are now being made by the Bureau of Weights and Measures.

### THE NEED OF A REMEASUREMENT OF THE PERUVIAN ARC.

In Appendix No. 7, Assistant E. D. Preston discusses the need of a remeasurement of the Peruvian arc of the meridian measured by Bouguer and La Condamine in the years 1736 to 1743. This paper was first presented by permission of the Superintendent to the American Association for the Advancement of Science at their meeting in Toronto, August, 1889.

Mr. Preston has examined with great care and thoroughness the methods of observation employed, the sources of error affecting them, the extent to which the measures of that day were defective, and the value of the result obtained for the earth's ellipticity. He urges the advantages to geodesy of repeating this measurement in view of the great improvements in instruments, and of the refinements in modern methods of observation, which, if brought to bear upon a remeasurement of this equatorial arc, would give a result entering with much weight into a new determination of the ratio between the equatorial and polar axes.

### RESULTS OF SPIRIT-LEVELING BETWEEN TIDE-WATER AT ANNAPOLIS, MD., AND THE CAPITOL BENCH-MARK AT WASHINGTON, D. C.

The line of spirit-levels run in 1875 between Annapolis and Washington by Assistant F. W. Perkins was then intended as a basis for determining the heights of stations of the primary triangulation in the region about Washington, but since the beginning in 1878 of the transcontinental line of precise leveling carried westward from the Atlantic coast along or near the thirty-ninth parallel, it has been found advantageous to incorporate the Annapolis-Washington line as an independent link connecting the transcontinental line with the Atlantic, by way of Chesapeake Bay.

It is therefore on account of its importance as such a link, serving as a check upon the connection of Washington with the Atlantic by way of Hagerstown, Md., and Sandy Hook, New Jersey, that the report of results of the observations derived from their discussion by Assistant Schott appears as an appendix (No. 15) to this volume. Reference to tide-water at Annapolis has been obtained by two series of tidal observations, one made in 1875, the other in 1888.

Upon the supposition that the average level of Chesapeake Bay at Annapolis is the same as that of the Atlantic, the height of the bench-mark on the Senate wing of the Capitol, as deduced from this line of leveling, is ninety feet and sixty-one hundredths of a foot, with a probable error of plus or minus eleven hundredths of a foot (90.61 feet $\pm$ 0.11 feet). The distance to tide-water at Annapolis is sixty-three kilometres, or about thirty-nine statute miles.

### MEASUREMENT OF THE LOS ANGELES PRIMARY BASE-LINE.

The need of a primary base-line in Southern California of sufficient length and so located as to be well connected with the main triangulation having been for some time recognized, Assistant Davidson was instructed in 1886 to have a reconnaissance for a site made.

In 1888, after an exhaustive examination, a site was finally decided upon, partly in Los Angeles County and partly in the new county of Orange, and in the winter of 1888–'89, the measurement was completed by Mr. Davidson and the party under his direction.

In Appendix No. 10 to this volume his account of this work is published. Full details are given respecting the location of the line, the apparatus used and methods of measurement adopted, the markings of the base stations and of the ends of the base, the comparisons of the base bars with the standard, etc. Sketches accompanying show the profile of the line, the leading topographical features of the country in its vicinity, and the connection of the base with the triangulation.

The adverse nature of the ground and certain peculiarities of construction in the apparatus rendered it advisable to make three separate measurements of the line. Precision of movement and rapidity of progress increased with each successive measurement, and it is believed that the third measurement exceeded in accuracy the second, as the second did the first.

### TELEGRAPHIC DETERMINATION OF THE LONGITUDE OF A STATION ON MOUNT HAMILTON, CALIFORNIA, NEAR THE LICK OBSERVATORY.

The northeast dome of the Lick Observatory, on Mount Hamilton, California, having been determined in geographical position by observations from the surrounding trigonometrical stations, and this mountain having been selected as one of the places where a comparison of astronomical and geodetic positions would be desirable, a station was selected on the mountain in the autumn of 1888 by the Director of the Observatory, and the longitude of this station determined by exchanges of telegraphic signals with the Lafayette Park Observatory, San Francisco. For the special use of the Survey, the position of the northeast dome was referred geodetically to the position of the temporary longitude station.

It will be noticed from the table of resulting differences of longitude (Appendix No. 8 to this volume) deduced by Assistant Schott from the observations made by Assistant Sinclair and Subassistant Marr, that, notwithstanding the time of over a month, due to unfavorable weather, which it took to obtain eleven nights for the exchange of longitude signals, the results for the separate nights are closely accordant, and that the final result is a very satisfactory one.

This is due in part to the care and skill of the observers, and in part to the improved transit instruments which were designed and constructed at the Office of the Survey for the special use of the longitude parties. Assistant Smith has furnished a description of these instruments, which appears as Appendix No. 9. He observes that they are the most complete and best constructed transits the Survey has ever had for longitude work.

### DISTRIBUTION OF THE MAGNETIC DECLINATION IN THE UNITED STATES FOR THE EPOCH 1890.

During the seven years which have elapsed since the publication by the Survey of the first general collection of magnetic declinations, reduced to a common epoch and the results charted (Appendix No. 13, 1882), the number of available stations has increased by nearly nine hundred, and much progress has been made in our knowledge of the secular variation. It has been possible therefore to increase greatly the precision of the magnetic charts for 1885, and to furnish new charts for the epoch 1890, of superior accuracy and completeness. These charts appear as illustrations to Appendix No. 11 to this volume, prepared by Assistant Schott. The labor required for bringing out the second edition of this paper was very considerable, but the usefulness of the charts will not be impaired for several years to come by reason of change in the magnetic distribution. Of this change, or secular variation, strict account can be kept, and for a full discussion of it see Appendix No. 7 to the report for 1888.

In one of the charts illustrating the magnetic distribution there are shown in detail (it is supposed for the first time for the United States) the magnetic meridians or lines of force, that is the lines which a traveler might be supposed to trace out by starting from a given point and following always the direction of a magnetic needle held by him.

By the results of these researches this office is enabled not only to assign the most trustworthy data for the charts of the Survey which require the impress of the compass showing the variation at sea, but at the same time to satisfy the large demand for magnetic information by surveyors and others, a demand which has been steadily on the increase since the labors of the Survey in this department of practical knowledge have become more widely known.

### ENCROACHMENT OF THE SEA UPON THE COAST OF CAPE COD, MASSACHUSETTS, AS SHOWN BY COMPARATIVE SURVEYS.

Surveys made at different periods between the years 1848 and 1888 on the coast of Cape Cod have afforded means for comparisons of changes due largely to the action of the sea upon that coast, and for a study of the laws of change. In these investigations Henry Mitchell, for many years an Assistant on the Survey, bore a leading part, and they have been continued by his associate, Assistant Henry L. Marindin.

The physical history of Cape Cod was made the subject of two papers by Mr. Mitchell, which were published as Appendix 9 to the Report for 1871 and Appendix 9 to the Report for 1873. In Appendix No. 12 to this volume Mr. Marindin, taking as a basis of comparison the surveys of 1848, 1856, 1868, 1887, and 1888, shows the effect of the wear of the sea upon the coast between Chatham and the Highland Light, and deduces the amount of average annual recession of the shore line. A sketch accompanying his report presents these results graphically.

### CROSS-SECTIONS OF THE SHORE OF CAPE COD BETWEEN CHATHAM AND THE HIGHLAND LIGHT-HOUSE.

The tables of cross-sections of the ocean shore of Cape Cod between Chatham and the Highland light-house, which are given by Assistant Marindin in Appendix No. 13 as a part of the results of his physical hydrographic surveys carried on since 1887 on that coast, will serve as a valuable standard of reference in future surveys, and will furnish data of importance to geologists and others who study changes in the coast line.

In the sketch (illustration No. 29) is shown the approximate position of each of the cross-sections with the location of the bench-marks to which their elevations above or depressions below mean sea-level are referred.

### RESURVEY OF THE NEW INLET INTO COTAMY BAY, MARTHA'S VINEYARD.

In the Annual Report for 1886, Appendix No. 9, was published an account of the changes in the shore-line and beaches of Martha's Vineyard, as derived from comparisons of recent with former surveys. This paper was prepared by Assistant Henry L. Whiting with special reference to the new opening through Cotamy Beach, which occurred during a violent storm, accompanied by a very high tide, on the night of January 9–10, 1886. The conclusions drawn by Mr. Whiting respecting the probable eastward movement of the new opening were based upon a comparison of surveys made by himself in 1846, 1856, 1871, and 1886. These conclusions have been verified by two later surveys, one by Assistant Vinal, in 1887, and the other by Mr. Whiting, in June, 1889. It appears from these later surveys that there has been in fact more change than was anticipated, although those changes that have taken place have been in accord with the predictions based upon a knowledge of former changes, and the laws which appear to govern the normal *set* of the tidal currents along the south coast of Martha's Vineyard, and to produce the prevailing sea-dash.

In Mr. Whiting's detailed report of the results of the latest resurveys, published as Appendix No. 14 to this volume, he observes that it is reasonable to predict that the easterly point of the inlet will move eastward past the Wasque Hills, leaving a long canal passage-way between an outer beach so formed and the fast land of Chappaquiddick; and that perhaps this long pas-

sage-way will extend to the easterly line of Chappaquiddick, as it did before the closing of the former inlet in 1869. There is, however, more liability now than then of a new opening breaking through at points along the main beach, which is much lower than it has been for many years. At no time in his experience since 1846, Mr. Whiting states, has the whole extent of beach across the face of Cotamy Bay, a distance of about three and a half miles, presented so feeble a barrier against the ocean waves and breakers as it does now.

## EXPLANATION OF ESTIMATES.

The estimates submitted to the Secretary of the Treasury for the fiscal year ending June 30, 1891, were accompanied by the following statement:

U. S. COAST AND GEODETIC SURVEY OFFICE,
*Washington, September* 13, 1889.

SIR: The estimates for the U. S. Coast and Geodetic Survey, which I have the honor to submit, are in general the same in form and fact as those submitted for the past year or two.

The estimates for the field work or party expenses are very slightly changed, the only thing to which I deem it necessary to call your especial attention being under the paragraph "for objects not named," where, in justice to those officers of the field force whom it is necessary for me to order to Washington for short periods for consultation about the work, I have inserted a paragraph to allow them, while so employed, actual necessary expenses as directed by me, within the limits of the Treasury regulations.

Under the head of pay of field officers I find that the force is already reduced to within the limits required for the proper execution of the work, and I have inserted two additional salaries at $3,000 per annum each, in order to enable me to avail myself of the services of experts not now connected with the Survey and the benefit of whose labors would be felt immediately.

In the pay of the Office force I have asked for a private secretary and a stenographer to the Superintendent, help absolutely necessary for the proper and effective discharge of my own duties. I have also asked that a disbursing officer be provided for the Survey at an additional expense of $400 per annum. The delays necessarily caused by our present means of disbursement are costly and vexatious.

The general expenses of the Office are increased in these estimates over those for the present fiscal year, the increase being absolutely necessary in order to transact our increasing business.

Under a separate heading I have set forth the estimated cost of furnishing special additional facilities for our chart printing. The demand is now, at certain seasons, so far in excess of our ability to supply, and is increasing so steadily that I feel compelled to bring the matter to your attention and ask its favorable consideration.

The office-room at our disposal is now entirely inadequate, and with the extension of our printing facilities more room will be necessary. The International Standards, which are soon to be delivered, must have some suitable place provided for them, and the only place at our disposal is now filled with material for chart printing. The estimate for new furniture and other outfitting will be absolutely necessary when the needed additional room is provided, but only a portion of that amount will be necessary if the additional room is not provided.

The item for printing and binding for the Coast and Geodetic Survey, work to be done by the Public Printer, I respectfully recommend to be appropriated separate and apart from the body of the appropriation for printing, etc., for the Treasury Department, in the same manner as a similar appropriation for the Geological Survey is set apart from the body of the appropriation for the Interior Department; to the end that an appropriation such as this, upon which we rely for the publication of tide tables, notices to mariners, coast pilots, and other indispensable documents, may be more particularly under my charge and always available.

The total of estimates for the Coast and Geodetic Survey for the fiscal year 1890, excluding printing and binding, amounted to $575,950.

| | |
|---|---|
| Total estimates for the fiscal year 1891, excluding printing and binding | $613,570 |
| Increase of estimates | 37,620 |
| Made up from the following items: | |
| Increase of party expense | 5,800 |
| Repairs and maintenance of vessels | 5,000 |
| Pay of two new field officers | 3,300 |
| Pay of office force | 2,550 |
| Office expenses | 2,500 |
| Additional facilities for chart printing (extraordinary expense) | 13,970 |
| Additional rent | 3,000 |
| New furniture and outfit (extraordinary expense) | 1,500 |
| | 37,620 |

Yours, respectfully,

T. C. MENDENHALL,
*Superintendent.*

The SECRETARY OF THE TREASURY.

ESTIMATES.

For every expenditure requisite for and incident to the survey of the Atlantic, Gulf, and Pacific coasts of the United States and the coast of the Territory of Alaska, including the survey of rivers to the head of tide-water or ship navigation; deep-sea soundings, temperature, and current observations along the coasts and throughout the Gulf Stream and Japan Stream, flowing off the said coasts; tidal observations; the necessary resurveys; the preparation of the Coast Pilot; continuing researches and other work relating to terrestrial magnetism and the magnetic maps of the United States and adjacent waters, and the tables of magnetic declination, dip, and intensity usually accompanying them; and including compensation not otherwise appropriated for of persons employed on the field-work in conformity with the regulations for the government of the Coast and Geodetic Survey, adopted by the Secretary of the Treasury; for special examinations that may be required by the Light-House Board or other proper authority, and including traveling expenses of officers and men of the Navy on duty; for commutation to officers of the field force while on field duty, at a rate to be fixed by the Secretary of the Treasury, not exceeding two dollars and fifty cents per day each; outfit, equipment, and care of vessels used in the Survey, and also the repairs and maintenance of the complement of vessels, to be expended in accordance with the regulations relating to the Coast and Geodetic Survey, from time to time prescribed by the Secretary of the Treasury, and under the following heads: *Provided*, That no advance of money to chiefs of field parties under this appropriation shall be made unless to a commissioned officer or to a civilian officer, who shall give bond in such sum as the Secretary of the Treasury may direct:

PARTY EXPENSES, COAST AND GEODETIC SURVEY:

| | |
|---|---|
| For triangulation, topography, and hydrography of the coast of Maine, on the St. Croix River, and to the International Boundary monument | $3,500 |
| For resurveys: For triangulation, topography, and hydrography in the vicinity of the east end of Long Island, Nantucket Shoals and approaches, and including Vineyard Sound, off-shore soundings in vicinity of Nausett Beach, Mass., and Connecticut River to Hartford, Conn., and Hudson River to Troy, N. Y., and for current observations off Cape Cod | 10,000 |
| For current observations along the Sandy Hook and Coney Island shores, outside | 3,000 |
| To continue to date corrections of former surveys of the Delaware River for use on a new large scale chart of the same vicinity of Philadelphia and up the Delaware River to Trenton | 2,000 |

PARTY EXPENSES, COAST AND GEODETIC SURVEY—Continued.

| | |
|---|---|
| For the hydrography of the inside waters and bars south of Absecon Light; for necessary triangulation and for continuing the topography along the Atlantic coast of New Jersey. (Nearly all of the hydrography is new work, and the topography is virtually so because of the great changes) | $3,000 |
| For a hydrographic examination of Charleston, S. C., entrance and bar, and for extending the surveys up the Cooper and Ashley Rivers to the head of navigation, triangulation, topography, and hydrography | 3,000 |
| To continue the primary triangulation from the vicinity of Montgomery, Ala., towards Mobile | 5,000 |
| For a geodetic junction of Fernandina with Cedar Keys, including a line of precise levels | 5,000 |
| For continuing the survey of the western coast of Florida from Cape Sable north to Cape Romano, and for hydrography off the same coast, being all new work. | 7,000 |
| For continuing the survey of the tributaries of Pensacola Bay, or, if completed, to run a line of standard levels from the bench-mark in Mobile to the bench-marks along the Mobile River up to the vicinity of Mount Vernon Landing | 2,000 |
| For the triangulation, topography, and hydrography of Perdido Bay and its connection with the coast triangulation, and for resurvey of Mobile entrance, and, if completed, to take up the survey of Lake Pontchartrain | 3,000 |
| For continuing the survey of the coast of Louisiana west of the Mississippi delta, and between Barataria Bay and Sabine Pass | 7,000 |
| To make off-shore soundings along the Atlantic coast and current and temperature observations in the Gulf Stream | 8,000 |
| For hydrography, coast of California, including San Francisco Bay and Harbor, and necessary triangulation and topography | 10,000 |
| For continuing the topographic survey of the coast of California, including necessary triangulation and astronomical work in connection therewith | 10,000 |
| For continuing the primary triangulation of California, and for connecting the same at Mount Conness with the transcontinental arc | 10,000 |
| For continuing the survey of the coast of Oregon, including off-shore hydrography, and to continue the survey of the Columbia River from the mouth of the Willamette towards the Cascades; triangulation, topography, and hydrography | 12,000 |
| For continuing the survey of the coast of Washington Territory. This amount is necessarily increased to meet the requirements of the hydrography | 12,000 |
| For continuing explorations in the waters of Alaska, and making hydrographic surveys in the same, and for the establishment of astronomical, longitude, and magnetic stations between Sitka and the southern end of the Territory | 10,000 |
| For continuing the researches in physical hydrography relating to harbors and bars, including computations and plotting | 7,000 |
| For examinations into reported dangers on the eastern, Gulf, and Pacific coasts | 500 |
| To continue magnetic observations on the Atlantic and Gulf slopes | 1,200 |
| For continuing magnetic observations on the Pacific coast, and at San Antonio Magnetic Observatory (experience shows that this increase is necessary to meet expenses) | 1,500 |
| For running an exact line of levels from Boston or Salem, Mass., to Blue Hill, Mount Monadnock, Mount Washington, Mount Independence, and Lake Champlain. | 2,000 |
| For continuing the line of exact levels from the vicinity of Jefferson City, Mo., westward, and for extending a line from the Fort Point tidal bench-marks at San Francisco to the Lick Observatory on Mount Hamilton and thence eastward | 6,000 |
| For continuing tide observations on the Pacific coast, viz: At Kadiak, in Alaska, and at Saucelito, San Francisco, Cal | 2,500 |
| For continuing tide observations on the Atlantic coast, at Sandy Hook, New Jersey, and at Savannah, Ga | 2,300 |

PARTY EXPENSES, COAST AND GEODETIC SURVEY—Continued.

| | |
|---|---|
| For a self-registering gauge at Willets Point, Long Island, New York, to co-operate with the gauge at Sandy Hook, New Jersey, in securing data for more complete study of the tides and tidal currents of East River and New York Harbor | $1,000 |
| To continue gravity experiments, at a cost not exceeding $500 per station, except for special investigations and experiments authorized by the Superintendent at one or more stations | 5,000 |
| For furnishing points to State surveys, to be applied, as far as practicable, in States where points have not been furnished | 10,000 |
| For determinations of geographical positions, longitude parties | 5,000 |
| For continuing the transcontinental geodetic work on the line between the Atlantic and Pacific Oceans, including a primary base in the vicinity of Salt Lake | 30,000 |
| To continue the compilation of the Coast Pilot, and to make special hydrographic examinations for the same | 5,000 |
| For traveling expenses of officers and men of the Navy on duty, and for any special surveys that may be required by the Light-House Board or other proper authority, and contingent expenses incident thereto | 3,500 |
| For objects not hereinbefore named that may be deemed urgent, including the actual necessary expenses of officers of the field force temporarily ordered to the office at Washington for consultation with the Superintendent, to be paid as directed by the Superintendent in accordance with the Treasury regulations | 7,000 |
| For contribution to the "International Geodetic Association for the Measurement of the Earth," or so much thereof as may be necessary, $450, to be expended through the office of the American legation at Berlin; and for expenses of the attendance of the American delegate at the general conference of said association, or so much thereof as may be necessary, $550: *Provided*, That such contribution and expenses of attendance shall be payable out of the item "for objects not hereinbefore named." | |
| And 10 per centum of the foregoing amounts shall be available interchangeably for expenditure on the objects named | |
| Total party expenses | 215,000 |

| | |
|---|---|
| *Alaska Boundary Survey.*—For expenses of carrying on a preliminary survey of the frontier line between Alaska and British Columbia and the Northwest Territory in accordance with plans or projects approved by the Secretary of State, including expenses of drawing and publication of map or maps, said sum to continue available for expenditure until the same is exhausted | $25,000 |
| *Repairs and maintenance of vessels.*—For repairs and maintenance of the complement of vessels used in the Coast and Geodetic Survey | 30,000 |

PAY OF FIELD OFFICERS:

| | |
|---|---|
| Pay of Superintendent | 6,000 |
| Pay of two Assistants, at $4,000 each | 8,000 |
| Pay of one Assistant | 3,600 |
| Pay of one Assistant | 3,200 |
| Pay of four Assistants, at $3,000 each | 12,000 |
| Pay of two Assistants, at $2,800 each | 5,600 |
| Pay of three Assistants, at $2,700 each | 8,100 |
| Pay of three Assistants, at $2,400 each | 7,200 |
| Pay of three Assistants, at $2,300 each | 6,900 |
| Pay of five Assistants, at $2,200 each | 11,000 |
| Pay of six Assistants, at $2,000 each | 12,000 |
| Pay of nine Assistants, at $1,800 each | 16,200 |

PAY OF FIELD OFFICERS—Continued.

| | |
|---|---|
| Pay of nine Assistants, at $1,500 each | $13,500 |
| Pay of three Subassistants, at $1,400 each | 4,200 |
| Pay of two Subassistants, at $1,300 each | 2,600 |
| Pay of four Subassistants, at $1,100 each | 4,400 |
| Total pay in the field | $124,500 |

PAY OF OFFICE FORCE:

| | |
|---|---|
| One private secretary to the Superintendent | 1,650 |
| One stenographer to the Superintendent | 1,200 |
| One disbursing officer for the Survey | 2,200 |
| One accountant | 1,800 |
| One accountant | 1,400 |
| One general office assistant | 2,200 |
| One draughtsman | 2,350 |
| One draughtsman | 2,100 |
| Two draughtsmen, at $2,000 each | 4,000 |
| Three draughtsmen, at $1,800 each | 5,400 |
| Three draughtsmen, at $1,400 each | 4,200 |
| One draughtsman | 1,330 |
| One draughtsman | 1,260 |
| Three draughtsmen, at $1,200 each | 3,600 |
| One draughtsman | 1,100 |
| Additional draughtsmen, at not exceeding $900 each per annum | 4,500 |
| Two computers, at $2,000 each | 4,000 |
| One computer | 1,600 |
| One computer | 1,400 |
| One computer | 1,260 |
| One computer | 1,100 |
| Additional computers, at not exceeding $900 each per annum | 2,700 |
| One tidal computer | 2,000 |
| One tidal computer | 1,600 |
| One tidal computer | 1,250 |
| Three engravers, at $2,100 each | 6,300 |
| Two engravers, at $1,800 each | 3,600 |
| Two engravers, at $1,600 each | 3,200 |
| One engraver | 1,200 |
| One engraver | 900 |
| Additional engravers, at not exceeding $900 each per annum | 2,700 |
| Engraving to be done by contract | 7,100 |
| One electrotypist and photographer | 1,800 |
| One electrotypist helper | 600 |
| One apprentice to electrotypist and photographer | 600 |
| One copper-plate printer | 1,700 |
| Two copper-plate printers, at $1,330 each | 2,660 |
| One copper-plate printer | 1,250 |
| Two plate-printers' helpers, at $700 each | 1,400 |
| One chief mechanician | 1,800 |
| One mechanician | 1,565 |
| One mechanician | 1,330 |
| One mechanician | 1,250 |
| One mechanician | 1,200 |
| One mechanician | 1,000 |

PAY OF OFFICE FORCE—Continued.

| | |
|---|---|
| One mechanician | $600 |
| One mechanician | 1,565 |
| One carpenter | 900 |
| One carpenter and fireman | 600 |
| One night-fireman | 550 |
| One map-mounter | 1,020 |
| One librarian | 1,800 |
| One clerk | 1,650 |
| One clerk | 1,500 |
| One clerk | 1,400 |
| One clerk | 1,350 |
| Three clerks, at $1,200 each | 3,600 |
| Three clerks, at $1,000 each | 3,000 |
| One clerk | 900 |
| One clerk | 1,175 |
| Three map colorists, at $720 each | 2,160 |
| One writer | 840 |
| Six writers, at $720 each | 4,320 |
| One writer | 600 |
| One messenger | 875 |
| One messenger | 840 |
| Two messengers, at $820 each | 1,640 |
| Three messengers, at $640 each | 1,920 |
| One driver | 730 |
| One packer and folder | 820 |
| One packer and folder | 630 |
| Two laborers, at $630 each | 1,260 |
| Two laborers, at $550 each | 1,100 |
| One laborer | 315 |
| One laborer | 365 |
| One janitor | 1,200 |
| Two watchmen, at $880 each | 1,760 |
| Total pay of office force | 143,340 |

OFFICE EXPENSES:

| | |
|---|---|
| For the purchase of new instruments, for materials and supplies required in the instrument shop, carpenter shop and drawing division, and for books, maps, charts, and subscriptions | $9,000 |
| For copper-plates, chart-paper, printers' ink; copper, zinc, and chemicals, for electrotyping and photographing; engraving, printing, photographing, and electrotyping supplies; for extra engraving and drawing, and for photo-lithographing charts and printing from stone and copper for immediate use | 16,000 |
| For stationery for the office and field parties; transportation of instruments and supplies when not charged to party expenses; office wagon and horses; fuel, gas, telegrams, ice, and washing | 8,000 |
| For miscellaneous expenses, contingencies of all kinds, office furniture, repairs and extra labor, and for traveling expenses of assistants and others employed in the office sent on special duty in the service of the office | 4,000 |
| And 10 per centum of the foregoing amounts for office expenses shall be available interchangeably for expenditures on the objects named. | |
| Total general expenses of office | 37,000 |

| | |
|---|---|
| ADDITIONAL FACILITIES FOR CHART PRINTING: | |
| For additional facilities for chart printing rendered necessary by increased demand for charts: | |
| Two new printing-presses with fixtures | $1,750 |
| New bed-plates for three old presses, and other necessary repairs | 500 |
| Shafting, belting, and machinery for applying power to five printing-presses and calender press | 2,500 |
| Two Otto gas-engines of ten horse-power each, or in lieu thereof, one of fifteen horse-power, if found adequate | 2,000 |
| Foundations and preparing engine-room | 300 |
| Making drying-room in Butler building, and additional paper-cases | 500 |
| Altering stable and other rooms of the Butler building to make addition to printing-office | 400 |
| One copper-plate printer | 1,000 |
| Three copper-plate printers' helpers, at $700 each per annum | 2,100 |
| One book-keeper and clerk | 1,000 |
| One messenger | 820 |
| One laborer | 600 |
| Unforeseen contingencies | 500 |
| Total | 13,970 |
| RENT OF OFFICE BUILDINGS: | |
| For rent of buildings for offices, work-rooms, and work-shops in Washington | 10,500 |
| For rent of fire-proof building No. 203, New Jersey avenue, including rooms for standard weights and measures; for the safe-keeping and preservation of the original astronomical, magnetic, hydrographic, and other records; of the original topographical and hydrographic maps and charts; of instruments, engraved plates, and other valuable property of the Coast and Geodetic Survey | 6,000 |
| For rent of building number 201 New Jersey avenue, southeast, being the middle house of the Butler buildings, in order to furnish absolutely necessary room for the accommodation of increased material and work for the office of construction of standard weights and measures | 1,800 |
| For rent of the whole of the brick building facing on South Capitol street, and located in the rear of the Butler buildings, Nos. 201 and 203 New Jersey avenue, and now occupied as private offices, the building to be used for the extension of chart-printing facilities | 1,200 |
| NEW FURNITURE AND OUTFITTING: | |
| For new furniture and outfitting needed in the Coast Survey Office, to be bought, as far as practicable, under Treasury contracts | 1,500 |
| PUBLISHING OBSERVATIONS: | |
| One computer | $1,600 |
| Three copyists, at $720 each | 2,160 |
| | 3,760 |

That no part of the money herein appropriated for the Coast and Geodetic Survey shall be available for allowance to civilian or other officers for subsistence while on duty in the Office at Washington (except as hereinbefore provided for officers of the field force ordered to Washington for short periods for consultation with the Superintendent), or to the officers of the Navy attached to the Survey; nor shall there hereafter be made allowance for subsistence to officers of the Navy attached to the Coast Survey, except that when officers are detached to do work away from their vessels under circumstances involving them in extra expenditure, the Superintendent may allow to any such officer subsistence at a rate not exceeding one dollar per day for the period actually covered by such duty away from such vessel.

PRINTING AND BINDING, COAST AND GEODETIC SURVEY:

For all printing and lithographing, photolithographing, photo-engraving, and all forms of illustration done by the Public Printer, on requisition by the Treasury Department, for the Coast and Geodetic Survey, namely:

For Tide-Tables; Coast Pilots; Appendices to the Superintendent's Annual Reports, published separately; Notices to Mariners, circulars, blank books, blank forms, and miscellaneous printing (including the cost of all binding and covering; the necessary stock and materials and binding for the library and archives) ..... $20,935

NOTE.—No engraving is done by the Public Printer for the Coast and Geodetic Survey.

Total Coast and Geodetic Survey (exclusive of printing and binding) for the fiscal year 1891 ..... 613,570

OFFICE OF CONSTRUCTION OF STANDARD WEIGHTS AND MEASURES:

*Salaries, Office of Standard Weights and Measures.*—For construction and verification of standard weights and measures, including metric standards, for the custom-houses, other offices of the United States, and for the several States, and mural standards of length in Washington, District of Columbia: One adjuster, at $1,500 per annum; one mechanician, at $1,250 per annum; one watchman, $720 per annum; in all $3,470 ..... 3,470

*Contingent Expenses, Office of Standard Weights and Measures.*—For purchase of materials and apparatus and incidental expenses ..... 800

*Provided,* That such necessary repairs and adjustments shall be made to the standards furnished to the several States and Territories as may be requested by the governors thereof, and also to standards, weights and measures, that may have been, or may hereafter be, supplied to the United States custom-houses and other offices of the United States, under act of Congress, when requested by the Secretary of the Treasury.

For the purchase of a balance of precision and its mounting ..... 1,200

For expenses of the attendance of the American member of the International Committee on Weights and Measures at the general conference provided for in the convention signed May 20, 1875, the sum of $600, or so much thereof as may be necessary ..... 600

2,600

# PART II.

The abstracts of reports of field and office work which occupy this part of the report have for their basis the annual and special reports of the officers in charge of field parties, the annual report of the Assistant in Charge of the Office, with the annual reports accompanying it from the chiefs of divisions in the office; the annual report of the Hydrographic Inspector, the reports of special operations and of the suboffices at Philadelphia and San Francisco.

In the arrangements of the abstracts of reports of field-work the usual geographical order has been followed, as indicated in Appendix No. 1—Distribution of the parties of the Survey upon the Atlantic, Gulf, and Pacific coasts and in the interior of the United States for the fiscal year 1889.

Appendix No. 2 presents the statistics of field and office work for the fiscal year; Appendix No. 3 gives a tabular statement of information furnished in response to requests, both official and personal; in Appendix No. 4 is given the annual report of the Assistant in Charge of the Office, and in Appendix No. 5 that of the Hydrographic Inspector.

Mr. B. A. Colonna has continued on duty as Assistant in Charge of Office and Topography. In submitting his annual report he refers to the increased efficiency of the work in meeting the demands of the public service; urges the necessity of an increase in the force of computers, draughtsmen, engravers, printers, mechanicians, laborers, and writers, to utilize fully and without delay the material accumulated for publication, and to meet the constantly increasing calls from the public, and represents the need of additional room for the office force and for storage. A summarized statement of this report will be found towards the close of Part II.

Lieut. Commander W. H. Brownson, U. S. N., Hydrographic Inspector, who has been on duty in that capacity since January 29, 1885, served throughout the fiscal year, and at its close was detached, and relieved by Lieut. Commander C. M. Thomas, U. S. N.

Lieut. Commander Brownson's thorough knowledge of all branches of hydrography, and his success in enlarging and adapting the organization of his office to the increasing needs of the Survey, made him a most valuable officer, and upon his detachment called forth from the Superintendent a letter to the Secretary of the Navy, expressing high appreciation of his ability, energy, and efficiency.

His annual report presents a general summary of hydrographic operations for the year on the Atlantic and Pacific coasts, states the condition of the vessels of the Survey, refers to the accompanying reports of the Hydrographic and Coast Pilot Divisions, and submits list of officers of the Navy attached to the Survey during the fiscal year.

He recommends that the Notices to Mariners, which are now published monthly, should be issued weekly as soon as satisfactory arrangements for prompt printing can be effected.

The Hydrographic Division was under the charge of Lieut. M. L. Wood, U. S. N., Assistant, Coast and Geodetic Survey, during the year. Ensign E. H. Tillman, U. S. N., had charge of the division during temporary absences of its chief. To Mr. Eugene Willenbucher, hydrographic draughtsman, was assigned the inspection of drawings and finished charts, Atlantic, Gulf, and Alaska coasts. To Mr. W. C. Willenbucher, hydrographic draughtsman, the preparation of field

records for registry of notes for charts and miscellaneous work, Atlantic and Gulf coast sheets. To Mr. F. C. Donn, hydrographic draughtsman, miscellaneous work and Pacific coast sheets. To Mr. E. H. Wyvill, hydrographic draughtsman, chart corrections from all sources, the correction of proofs for engraving, sample charts for chart room, and other miscellaneous work. Tabular statements show in detail the work of each hydrographic draughtsman.

Ensign E. H. Tillman, U. S. N., Assistant, submits the annual report of the Coast Pilot Division, of which he had charge since November 25, 1888, having relieved on that date Lieut. George H. Peters, U. S. N., detached for other service. Under the general direction of the Hydrographic Inspector, the duties of this division involve the execution of work both in the office and in the field.

Ensign Tillman reports the publication of a third edition of the Atlantic Local Coast Pilot, Subdivisions 6–7, Cape Ann to Monomoy; the publication in a revised form of the United States Coast Pilot for the Atlantic Coast, Part IV, Long Island Sound with approaches and adjacent waters and the proof-reading of a portion of Sub-division 22, Jupiter Inlet to Dry Tortugas. The manuscript of a volume (Part VI) to cover Chesapeake Bay and its tributaries was prepared for publication.

Ensign E. A. Anderson, U. S. N., rendered efficient service while temporarily attached to the division, February 25 to April 17, 1889. Mr. John Ross rendered able assistance during the entire fiscal year. Miss Julia Baird, Miss G. B. Bower, and Miss Alice F. Carlisle were employed as copyists at different periods of the year.

## SECTION I.

### MAINE, NEW HAMPSHIRE, VERMONT, MASSACHUSETTS, AND RHODE ISLAND, INCLUDING COAST AND SEA-PORTS, BAYS AND RIVERS. (SKETCHES NOS. 1, 3, 17, and 18.)

*Continuation of the triangulation of the St. Croix River, and of the lakes near its head towards the Northeastern Boundary.*—At the beginning of the fiscal year the party of Assistant C. H. Boyd had been in the field near Calais, Me., for about a month, having resumed the reconnaissance and triangulation for connecting the primary work on the coast of Maine with the Northeastern Boundary Survey.

The signals which had been left standing through the preceding winter having been examined, a reconnaissance made, lines of sight opened, the ground cleared and new signals erected, Mr. Boyd took up the triangulation at the line Oak Hill-Neals, of the season of 1887, and pushed it forward until November 9, 1888, at which date he was occupying a station, Spruce Mountain, near the lower end of Grand Schoodic Lake.

Owing to the few roads through the forest and to the fact that the only crossing of the St. Croix is at the Calais bridges, access to the stations involved a great amount of travel for the party; this amount during June was estimated at six hundred miles, and proportionally in other months. At the two stations last occupied, Mount Henry and Spruce Mountain, one hundred miles of travel were required to pass from one to the other, although their distance apart was but fifteen miles. The progress of work was delayed also by bad weather; rain, mist, or snow prevailed during the last three months of the season. These months are usually the best of the year for observations over long lines.

Owing to the swarms of black flies, which appear in early summer in the woods of this region, but little profitable work can be done before the middle of July.

In his annual report Mr. Boyd renews a suggestion which he had made in a letter to t' Superintendent dated July 15, with reference to the need of a tertiary triangulation which sh determine and define the limits of the islands, ledges, and shore-lines of the boundary lakes, being as yet no maps upon which the course of the boundary line over the lakes could be n

Mr. R. H. Bayard served as recorder with the party about half the season. He v obliged to leave on account of ill health. Mr. E. C. Lyle joined the party as recorder i ber, and served acceptably till the close of field operations.

Following are the statistics of the season's work:

Reconnaissance and triangulation:

| | |
|---|---|
| Area of, in square statute miles | 460 |
| Lines of intervisibility determined, as per sketch submitted | 30 |
| Number of points selected for scheme | 15 |
| Signal poles erected | 10 |
| Days occupied in opening and verifying lines of sight | 25 |
| Stations occupied for horizontal measures | 11 |
| Stations occupied for vertical measures | 9 |
| Geographical positions determined, number of | 13 |
| Elevations determined trigonometrically | 12 |

For about a month after his return from the field Mr. Boyd was engaged in Office-work. In December he was instructed to take charge of a party on the coast of Louisiana, and early in January, 1889, he proceeded to New Orleans. An account of this service appears under a heading in Section VIII.

*Completion of the topographical survey of the west bank of the St. Croix River, between Pleasant Point and Shortlands Station.*—The gaps remaining in the topographical survey of the west bank of the St. Croix River, between Pleasant Point and Shortlands Station, including the towns of Robbinston and Perry, were filled by Assistant C. M. Bache during the season of 1888. Reference was made in the last annual report to the beginning of this work, Mr. Bache having organized his party under instructions dated early in June.

By the 8th of October the work was completed, though not without much interruption from unfavorable weather. With the finished topographical sheets, two descriptive reports have been submitted. It is noted that in its general character the country is rocky, the most marked rock formation being the so-called red granite, which is really a syenite, the red color being due to impurities in the constituent feldspar. Evidences of glacial action, Mr. Bache observes, are readily traced, the scratches on the hard compact rocks having apparently suffered but little obliteration since they were made. The shores generally terminate in cliffs down to high water. That portion of the beach between high and low water is covered by sand and broken stone, while in numerous places there are outcroppings of solid ledges.

For the season the statistics are:

Topography:

| | |
|---|---|
| Area surveyed in square statute miles | 14 |
| Length of shore-line in statute miles: | |
| High-water line | 24 |
| Low-water line | 16 |
| Length of roads in statute miles | 41 |

*Topographical survey of the North Branch of Cobscook Bay, Maine.*—Having organized his party about the middle of June, 1888, as stated in the last Annual Report, Mr. J. H. Gray, Aid, took up the topographical survey of the north branch of Cobscook Bay, Maine.

The topography completed during the season extended from the Falls of Cobscook to the town of Dennysville, Washington County, Maine, at the head of navigation on Denny's River.

Mr. Gray has submitted with his topographical sheet a descriptive report giving details in regard to the character of the country under survey, its growth of timber, geological features, etc. He noted marked instances of glacial action upon the rocky hills and ledges which were so abundant throughout the region. The shore-line is in general of sharp broken rock, chipped from the cliffs bordering it by the agency of frost and ice. Beyond this, and near low-water line, there is soft mud, containing many deep holes, called by the natives "honey-pots." As the rise and fall of the tide is about twenty feet, the coves are mostly bare at low water.

Frequent rains and smoky weather retarded the progress of the work. Field operations, begun June 15, were closed September 30. The statistics of the topography which was executed on a scale of 1–10000, are as follows:

| | |
|---|---|
| Area surveyed in square statute miles | 13 |
| Length of shore-line of rivers in statute miles | 33 |
| Length of shore-line of creeks in statute miles | 23 |
| Length of roads in statute miles | 28 |

About the end of November, Mr. Gray was assigned to duty in the party of Assistant Joseph Hergesheimer, on the west coast of Florida.

*Completion of the hydrography of Cobscook Bay, Maine.*—Towards the end of September, 1887, as stated in the last Annual Report, a hydrographic survey of Cobscook Bay, Maine, was begun by Lieut. F. H. Crosby, U. S. N., Assistant Coast and Geodetic Survey, commanding the steamer *Gedney*, and carried on till the close of field operations in October. In July, 1888, this survey was resumed by Lieutenant Crosby, and continued by him until he was relieved in the command of the *Gedney* by Lieut. J. M. Helm, U. S. N., Assistant Coast and Geodetic Survey.

Lieutenant Helm finished the survey of Cobscook Bay early in September, 1888. With its completion the hydrographic survey of the coast of Maine was brought to a close. The results of the work are shown on three hydrographic sheets, and are plotted on a scale of 1–10000. These sheets are accompanied by descriptive reports.

Cobscook Bay, Lieutenant Helm observes, is extremely irregular in shape, has islands and ledges almost innumerable, and bold rocky shores, quite thickly settled, mostly by sea-faring men, who are competent pilots.

Owing to the great number of rocks and ledges and the very strong currents, strangers should take pilots always. The soundings are extremely irregular, shoaling and deepening so suddenly that the lead is not of service in navigation, except in the broad, clear portions of the Bay. Few, if any, vessels other than those owned in the vicinity frequent the Bay since the decline of the lumber interest. There are no lights, ranges, or beacons, the only aids to navigation being spar-buoys.

The tidal currents, as a rule, set fair with the deep-water channels, but strong eddies are formed by every prominent point, cove, rock, ledge, or island, so that in the crooked portions of the channels, the currents present a confused lot of *swirls*. The currents are so strong that where the channel is narrow and turns suddenly, the current setting more to one bank than the other, the water is piled up, so that the difference is very perceptible to the eye. On projecting points and submerged rocks and ledges, there are heavy overfalls which are dangerous to boats. Special mention of localities where these overfalls are most dangerous is made by Lieutenant Helm in his descriptive report A.

The officers attached to the party were Ensigns R. O. Bitler, Joseph Strauss, and D. S. Nes, U. S. N., and Naval Cadet Philip Andrews.

For the season, the following statistics are reported:

| | |
|---|---|
| Hydrography: | |
| Area surveyed in square statute miles | 23 |
| Number of miles (geographical) run while sounding | 497 |
| Number of angles measured | 843 |
| Number of soundings | 36,845 |
| Number of tidal stations established | 12 |

Upon the completion of his work in Cobscook Bay, Lieutenant Helm was instructed to proceed to the eastern entrance of Vineyard Sound and execute some hydrography there needed. Reference to this duty will be made under a subsequent heading in this section.

*Completion of the topographical survey of Cobscook Bay.*—The topographical survey begun by Assistant Eugene Ellicott, May 14, 1888, and completed September 30, included the shore line and country contiguous to the northeastern quarter of Cobscook Bay, Maine, taking in the villages

of Pembroke and West Pembroke. Between September 30 and October 17, when field operations were closed, Mr. Ellicott was occupied in filling in details upon the unfinished sheet of Assistant Dennis, of West Quoddy Bay.

There remain now to be executed, to finish the topographical survey of the northeastern coast of Maine, some details of topography between Cobscook Bay, Quoddy Head and the ocean shore, and a small gap yet unfilled in the topography of the west shore of Passamaquoddy Bay, above Lubec.

Mr. Ellicott has submitted, with his topographical sheets, a full descriptive report, which has been filed in the archives. In this report will be found statements relating to the characteristics, geological and topographical, of the country about Pembroke, its resources and industries, its supplies of timber, and means of communication.

For military and diplomatic purposes of reference he suggests that a survey of the road leading from Calais to Machias, and all other roads lying between that line and the ocean shore, would be desirable, such a survey as would have the character of a good reconnaissance.

The statistics of the season's work are as follows:

Topography:

| | |
|---|---|
| Area surveyed in square statute miles | 29 |
| Length of shore line in statute miles | 43 |
| Length of roads in statute miles | 44 |

After returning from the field, Mr. Ellicott was engaged in Office-work, and in January, 1889, proceeded under instructions to Charleston, S. C., to execute certain surveys required in that vicinity. An account of this duty will be found under the heading of Section V.

*Hydrographic examinations on the coast of Maine in the vicinity of Nash Rock, and between Matinicus Rock and Seguin Island.—Also off the coast of Massachusetts from Nantucket Shoals to the eastern limit of George's Bank.*—During the first half of the fiscal year Lieut. J. E. Pillsbury, U. S. Navy, Assistant Coast and Geodetic Survey, commanding the steamer *Blake*, was prosecuting hydrographic examinations in the Gulf of Maine. Under instructions bearing date of July 5, 1888, and supplementary instructions of a later date, he made a special examination in the vicinity of Nash Rock, generally known as Black Rock, to the southeast of Nash Island, coast of Maine. This examination occupied but two days and developed no features of special interest.

The principal work of the season on the coast of Maine was a hydrographic survey of the one-hundred-fathom curve between Matinicus Rock and Seguin Island. Lieutenant Pillsbury observes that the bottom on this part of the coast is invariably rocky and extremely irregular. No dangerous shoal however was found that required additional development. The currents along shore are almost entirely tidal, and the only time when any abnormal current was found was on the second day after one of the most violent cyclones of the year (September 26), when a strong westerly current was observed well off shore. This abnormal current, he does not doubt, was caused by the cyclone.

The work just referred to occupied the latter part of the season, but precedes in geographical order that undertaken by Lieutenant Pillsbury between July 14 and August 14, the soundings to the one-hundred-fathom curve from Nantucket Shoals to the eastern limit of the George's Bank. These soundings were prosecuted as continuously as the weather would permit.

The *Blake* was frequently anchored on the shoals for observations of currents for navigation purposes. These observations were found to agree invariably, with remarkably close approximation, with the predicted currents of the Atlantic Coast Pilot. They are variable each hour both in velocity and direction.

Fogs and misty weather prevailed, and the difficulty of running lines so as to develop the curves closely without breaks was considerable. It was necessary, therefore, to steam many more miles than the soundings show, and discard a large amount of actual work for want of good observations to fix positions.

Lieutenant Pillsbury remarks that the surface water temperature observations seem to indicate that the warm water of the Gulf Stream, or the Atlantic northerly flow, presses close in on the shoal. The temperature about the one-hundred-fathom curve to the southward of George's Bank

usually ranged from seventy to seventy-three degrees, Fahr. From the one hundred-fathom curve to the curve of from forty to fifty fathoms, the fall in temperature was about fifteen degrees; that is, outside one hundred fathoms the temperature was above seventy, and inside fifty fathoms it was less than fifty-five degrees.

Sometimes a change would be found of over ten degrees in less than an hour, and on the lines of observation the weather frequently changed from clear to fog or mist. Lieutenant Pillsbury thinks it probably that the sub-surface temperatures are quite different and that the position of the edge of the warm surface water depends upon the strength of the tidal current and the cold counter current. Also that if we knew the laws of the latter as well as the former, we would be able to predict the line of fog belt with sufficient accuracy to confer great benefit on commerce.

At the close of the season, October 1, the *Blake* returned to Boston.

The statistics of work accomplished are as follows:

Hydrography:

Vicinity of Black Rock, near Nash's Island:

| | |
|---|---|
| Area sounded in square geographical miles | 2 |
| Number of miles (geographical) run while sounding | 79 |
| Number of angles measured | 920 |
| Number of soundings | 1,076 |
| Number of hydrographic sheets (scale 1–10000) | 1 |

From near Seguin Island to Woodenball Island, Maine:

| | |
|---|---|
| Area sounded in square geographical miles | 527 |
| Number of miles (geographical) run while sounding | 527 |
| Number of angles measured | 1,250 |
| Number of soundings | 1,093 |
| Hydrographic sheets (scale 1–40000) number of | 1 |

From Nantucket Shoals to and including George's Bank:

| | |
|---|---|
| Area sounded in square geographical miles | 3,250 |
| Number of miles (geographical) run while sounding | 2,036 |
| Number of positions determined | 85 |
| Number of soundings | 1,489 |
| Number of hydrographic sheets (scale 1–40000) | 1 |

In November, Lieutenant Pillsbury was instructed to prepare the *Blake* for service in continuation of the explorations of the Gulf Stream. A report of the results of this work, carried on during the winter of 1888–'89, will be found under a heading in Section VI.

*Physical hydrography.—Continuation of the survey of the coast of Cape Cod Peninsula from the vicinity of Chatham to the northward.*—The resumption of the physical hydrographic survey on the ocean shore of Cape Cod Peninsula by Assistant H. L. Marindin in June, 1888, was referred to in the last Annual Report. His party consisted of Messrs. E. E. Haskell and Homer P. Ritter, as expert observers and Messrs. E. H. Wedekind and C. H. Stone as recorders, with a crew of surf-boatmen. At the beginning of the fiscal year, the party was in camp at North Chatham, Cape Cod, engaged in closing up a gap between the work of Lieutenant Pillsbury, U. S. N. Assistant, and that of Mr. Marindin executed during the previous season.

For the part of the coast under survey, cross-sections of the beach and bluffs were laid out, with levels and soundings on each section; also the necessary tide-observations for the reduction of soundings. Levelings were taken to refer the zeros of the tide-gauges to the bench-marks established in connection with them.

It was deemed important for future reference that the tide staffs and bench-marks should be connected by lines of precise leveling, and at the end of the season two lines of precise levels had been carried from Harding's Beach, south of Chatham, to Pamet River Life-Saving Station, a distance of twenty-eight miles.

Numerous permanent bench-marks were established at points where they were likely to remain undisturbed. Descriptions of these accompany the volumes of records and computations.

Mr. Marindin has included in his report a full description with drawings of a form of syphon tide-gauge devised by himself for use on an open sea-coast, where the maintenance of a staff-gauge is a very difficult undertaking, or where the pressure-gauge could only be used with the aid of a vessel anchored off-shore, a condition which could not be complied with any length of time even during the summer months. This syphon-gauge has been described and figured in Bulletin No. 12.

The results of the work are now in hand for final reduction and discussion; when completed they will be shown on three hydrographic sheets, each on a scale of 1–10000. On these will be indicated the position and number of cross-sections leveled and sounded. These sheets will offer the best base survey for future comparisons of the changes in the bluff-line, shore-line and the submerged contours out to six fathoms of depth, and when used in conjunction with the elevations of the permanent bench-marks established by the precise leveling, they will furnish data for accurate reference.

Fields operations were closed October 27. Mr. Marindin expresses himself as specially indebted to Messrs. Haskell and Ritter for efficient service. The lines of precise levels were run entirely by these officers, one running the line in a northward and the other in a southward direction.

For the season the statistics are:

Physical hydrography:

| | |
|---|---|
| Number of soundings on cross-sections | 9,099 |
| Signal poles erected, number of | 6 |
| Stations occupied for horizontal measures, number of | 8 |
| Geographical positions determined, number of | 7 |
| Elevations determined by spirit-leveling of precision, number of | 12 |
| Lines of geodesic leveling, length of, in statute miles | 46 |
| Length of general coast line in statute miles | 16 |
| Elevations determined by common levels on cross-sections | 1,370 |
| Area sounded in square geographical miles | 6 |
| Number of miles (geographical) run while sounding | 85 |
| Number of angles measured | 2,426 |
| Number of tidal stations established | 3 |

At the end of the season the party was disbanded, the camp outfit and equipage stored at Truro, and, in accordance with instructions, Mr. Marindin, with Messrs. Haskell and Ritter, reported for duty at the Coast and Geodetic Survey Office.

During the following winter and part of the spring Mr. Marindin was engaged with his party in the reduction of observations made during the course of physical hydrographic surveys in New York Harbor and on Cape Cod. Towards the end of April he was instructed to make arrangements for resuming the Cape Cod survey at as early a date in May as practicable. Before leaving for the field, he submitted a report on the encroachment of the sea upon the coast of Cape Cod, as shown by comparative surveys, with a sketch indicating changes in shore line between 1848 and 1888. This report is published as Appendix No. 12 to this volume.

On the 20th of May the party was established in camp at High Head, near Provincetown, but owing to unusually stormy weather, which then prevailed, only a small amount of field-work could be accomplished during the rest of the month. At the end of the fiscal year work was in active progress, the observations including the measurement of the coast line in cross-section, beginning far enough inland to show the nature of the barrier to the sea and running out to about thirty-six feet of depth, supplemented by lines of leveling of precision, tidal observations, and topographic surveys where the changes in the surface were most marked. Care was taken to leave permanent bench-marks connected by precise levels, and each cross-section was marked by lines of stakes, most of which can probably be identified after a lapse of years.

Up to June 30, 1889, the part of the coast line examined was comprised between Cape Cod (or Highland) Light-House and Peaked Hill Life-Saving Station. Statistics of the work of 1889 to that date are as follows:

| | |
|---|---|
| Tertiary triangulation: | |
| Stations occupied for horizontal angles | 4 |
| Positions determined | 24 |
| Angles measured | 329 |
| Plane-table determination of section marks | 108 |
| Length of low-water line determined by the plane-table (metres) | 1,950 |
| Length of shore-line of high water run by plane-table (metres) | 8,100 |
| Length of transit lines to locate cross-sections (metres) | 11,700 |
| Length of transit lines to locate cross-sections on bay side (metres) | 1,800 |
| Length of line of common levels run (metres) | 10,800 |
| Length of line of common levels run on sections normal to the coast (metres) | 13,340 |
| Length of lines of precise leveling | 5 |
| Number of tide stations occupied | 1 |
| Number of cross-sections sounded | 61 |
| Number of soundings on cross-sections | 4,078 |
| Number of signals erected | 13 |
| Number of angles measured for location of soundings | 1,674 |

*Continuation of the determinations of town boundary lines in the State of Massachusetts.*—Under instructions issued in May, 1888, Assistant C. H. Van Orden was directed to report to Assistant H. L. Whiting, and take the field to continue under his direction the work of determining points for the State Surveys of Massachusetts.

Mr. Whiting, as one of the Commissioners of the State Survey, has incorporated in the Report of the Commission for the year 1888, a statement of the progress made by Mr. Van Orden in executing the triangulation in Barnstable and Plymouth Counties, required for the determination of town boundaries. Owing to the generally low and level character of the ground and the large areas of woodland, this has probably been one of the most difficult sections of the State for trigonometrical work. The season was also unusually unfavorable; there were thirty-three rainy days and much threatening weather. Two hurricanes seriously injured eight of the large signals, from seventy-five to one hundred feet in length. These had to be repaired at considerable expense and much loss of time.

The area gone over in Mr. Van Orden's survey includes the townships of Sandwich, Mashpee, Bourne, Falmouth, Plymouth, Kingston, Duxbury, and Marshfield, the boundaries of which have been completed. Boundary points were determined in parts of the lines of Pembroke, Halifax, and Plympton, and the triangulation extends still further, over the towns of Carver, Hanson, and Hanover.

Mr. Van Orden observes with regard to the country east and north of Falmouth that it was of the most difficult nature, the line between Bourne and Plymouth being in dense timber. The clearing required in order to see and determine various boundary points amounted in all to about two miles of timber cutting. In the course of the work, some of the old but important points of the Coast Survey, which have for many years been supposed to be lost, were recovered, and marked permanently and securely with marble posts. Among these are the stations of Falmouth and Carolina Hill. The stations Crocker, Baker's Pond, West Brewster, Kelly, King's Hill, and Nickerson, which had been occupied in 1887, were also marked with stone posts.

In addition to the above work, Mr. Van Orden continued the system of accurate levelings, extending them along the line of the Old Colony Railroad to Middleborough. As stated in the last Annual Report, the whole line so far run is permanently marked by copper plates, secured to the station and freight houses of the railroad. Below Tremont all of the plates were referred to mean tide level of the gauges of Cape Cod and Buzzard's Bay. At Tremont and northward, the bench-marks have been left for future connection with the Boston tide-gauge. Data now availa-

ble give the height above mean sea-level of the bench-mark at Tremont as 66.047 feet, and of that at Rock Station as 79.000 feet. The double lines of leveling gave most satisfactory results, being constantly in close accord.

Mr. Van Orden speaks in high commendation of the efficiency and skill of his assistant, Mr. J. B. Tolley, who had been with him in his former seasons of work for the Commonwealth. Mr. W. C. Hawley served during part of the season.

The statistics for the field operations of 1888, beginning May 31 and ending December 24, are as follows:

Town boundary work:

| | |
|---|---|
| Number of new stations determined | 71 |
| Number of new stations occupied | 57 |
| Number of transverse stations occupied | 111 |
| Number of boundary points determined | 30 |
| Number of miles of levels | 65 |
| Area in square miles covered by triangulation | 475 |

During the winter and part of the spring following, Mr. Van Orden was engaged in bringing up the records and computations of his field work, and towards the end of April, 1889, was directed to report to the Commissioners of the Massachusetts State Survey for the continuation of the town boundary work. Bridgewater was selected as the place of beginning field operations, Mr. Van Orden with Mr. Tolley, his foreman, arriving there May 13.

Signals were built at the stations Carolina Hill, Monk's Hill, and Alden, of the old triangulation, the base lines Carolina Hill, Monk's Hill, and Alden having been selected as bases for this part of the work. A small triangulation was then laid out to connect these stations with the corners of the town of Bridgewater and the towns adjacent. On May 18, Mr. E. E. Pierce reported for duty as foreman. Field work was carried on from that date, spreading eastwardly and westwardly, with but little interruption except from the unusual amount of rain, and at the end of the fiscal year it was in course of active prosecution.

Many of the corner monuments fell in low ground, calling for great ingenuity to reach them. One was in a cedar swamp, where the water was over a man's head. In such cases, a point as near as practicable was selected, and its position determined; from this point a traverse to the corner was run, and its azimuth determined by angular measurements on one of the regular points in the scheme of triangulation. The traverses were made as short as possible, being often less than one hundred metres, and their lengths were measured with great care.

For the season of 1889, up to June 30, Mr. Van Orden reports the following statistics:

| | |
|---|---|
| Number of signals built | 34 |
| Number of stations occupied | 42 |
| Number of town corners determined | 32 |

*Resurvey of the new inlet into Cotamy Bay, Martha's Vineyard.*—Assistant Henry L. Whiting has submitted a report of the results of his resurvey made in June, 1889, of the new inlet into Cotamy Bay, Martha's Vineyard. He finds that his conclusions deduced from former surveys relative to the eastward movement of this opening have been confirmed. His report, which is accompanied by a sketch presenting a comparison of shore-lines from surveys made in 1846, 1856, 1871, and 1886, appears as Appendix No. 14 to this volume.

*Supervision and inspection of topographical resurveys on Martha's Vineyard, No Man's Land, Naushon, in the vicinity of Wood's Holl, and on the southeasterly part of Long Island.*—The report submitted by Assistant H. L. Whiting of his duties of supervision and inspection of the topograhical resurveys on Martha's Vineyard and adjacent islands, and on the main-land at Wood's Holl and vicinity, presents some interesting and valuable results of the comparison of old and new surveys in localities which are of interest to navigation as defining the important waterway of Vineyard Sound. The report closes with a notice of the resurvey on the south coast of Long Island in the vicinity of Westhampton, about fifty miles to the west of Montauk Point.

Upon Martha's Vineyard and No Man's Land, the resurveys were executed by Assistant John W. Donn; upon Naushon and the Falmouth shore, by Assistant W. Irving Vinal, and on Long Island by Assistant C. T. Iardella.

For the details of the work of these several parties, the time occupied during the season of 1888, and the statistics, reference may be made to the reports of their chiefs, which will be found under separate headings in this and the next section.

Space is not available for more than a few extracts here from Mr. Whiting's very full description of the features, geological and topographical, of the localities under survey, and account of the changes due to natural causes in the shore-line. With regard to Martha's Vineyard he observes:

"The formation and material of the northerly part of Martha's Vineyard is of much the same character as that of Long Island and Block Island. This part of the Vineyard is marked by a succession of irregular hills, which, with the exception of the Manomet Hills near Plymouth, are the highest in southeastern Massachusetts, the highest summits being from about three hundred to three hundred and ten feet. In approaching Vineyard Sound from the southwest, the conical top of Prospect Hill is the first land seen from the sea.

"The territory of Gay Head, formerly an Indian reservation of Massachusetts, has an area of between five and six square miles, terminating at its western extremity in the curiously variegated clay cliffs which give the name to this remarkable head-land. The land of the peninsula of Gay Head is generally hilly; Molaska Hill, near the center, is about one hundred and eighty-five feet high. The southwest and northeast points of the peninsula, however are of beach formation. The highest land at Nashaquitsa is about one hundred and fifteen feet, and at Squipnocket about sixty-five feet.

"The triangulation executed by Assistant R. A. Marr in 1887, has furnished, as was intended, sufficient basis for the topographical resurveys which have been made during the past season of 1888 by Assistant J. W. Donn. I need hardly say that the accuracy and style of Mr. Donn's work has been of the first order in every respect, and more in detail than was the custom to follow in the earlier survey.

"The agreement in geographical position of the main features of the two surveys is, however, so far satisfactory that the comparison of them gives a reliable basis for measuring the changes effected by time and other natural causes during the interval of forty-three years since the first survey was made.

"From the physical peculiarities of Gay Head, and the importance of its position as one of the main promontories of the coast marking the entrance to Vineyard Sound * * * it was deemed desirable to make the resurvey of the special features of the cliff on a larger scale than that usually given to the field work of ordinary shore topography. For this purpose a sheet was projected on a scale of 1–2500, or about 25.3 inches to a statute mile. On this sheet Mr. Donn made a very elaborate survey of the features of this remarkable cliff, which is the only one of its kind in the whole extent of our Atlantic coast.

"Owing evidently to the tenacious character of the clay of which the Gay Head Cliffs are composed, they have held their own much more firmly than might have been expected against the attacks of the sea, which at times dashes against their base with the violence of the heaviest storm breakers. the most apparent cause of the giving away of the base of the cliffs, which occasionally happens in slides of greater or less masses, seems to be the insidious action of springs and quicksands at their base.

"Although this head-land is exposed, as before remarked, to the full sweep of the ocean, the immediate shore and beach is guarded by the bed of bowlders which extend well out beyond the water-line. It was on one of these sunken bowlders that the ill-fated steamer *City of Columbus* struck. These 'rocks' as they are locally called, undoubtedly mark the former ground of the original head-land. The 'Devil's Bridge,' so called, confirms the theory and fact that the greater mass of them was deposited along the higher and more northerly part of the original drift.

"The waste of this remarkable head-land has already reached a line beyond its original summit, so that all future loss will lower its elevation, and that of the first order light, now not far from the crest of the cliffs, unless in the next retreat (one has already been made) a higher light-house structure is erected.

"Owing to the comparative smallness of the scale of the survey of 1845, and the worn condition of the older map and change in the position of the light-house as a main point of reference, it is difficult to make a close comparison and measurement of details. The very elaborate survey made by Mr. Donn will, however, preserve the record of the exact position of the cliffs, with all their varied physical and topographical features, from which a closer and more interesting knowledge of future changes can be obtained.

"The best comparison that can now be made shows, near the northwest point of the head-land, for a lateral distance of about three hundred and fifty feet, a slide or giving way of the summit line of the cliff, the greatest amount of waste of which is about ninety feet. From the same point eastward along the shore of the Sound for a distance of about fifteen hundred feet, the summit line of the bank has fallen back irregularly in various places. A former spur, nearly opposite the light-house, has given away a distance of about one hundred and twenty feet. Along the line of the Government land surrounding the light-house, there has been an average waste of from eighty to ninety feet. There has not been much apparent change in the position of the high-water line along this front of the head-land."

With regard to the resurvey of the shore topography of the small island of No Man's Land, lying about five and a half miles south a little east from Gay Head Light, Mr. Whiting observes that the scale of resurvey was 1-5000. Being so far outside of the larger islands, it is open to the action of the sea from all directions, and the earthy material of which it is composed makes it an easy prey to the consuming power of the waves. Full details of changes in the configuration of the shores since the first survey are given in Mr. Whiting's report.

Referring to Mr. Vinal's resurvey of Wood's Holl and vicinity, an account of which is given under a separate heading in this section, Mr. Whiting states, as a general result, after reviewing the detailed resurvey, which was executed on a scale of 1-5000, that no important change has taken place in the main features of the topography during the last forty-three years. This he deems somewhat surprising, particularly in the features of Wood's Holl, in view of the strength of the currents that are constantly rushing through its narrow and tortuous water-way, and it suggests an interesting field, he thinks, for physical investigation as to the power of imbedded bowlders and shingle, where no actual ledges seem to exist, to resist the forces of tidal currents of such high velocities.

The resurvey on the south coast of Long Island, in charge of Assistant Iardella, reported under a heading in Section II, was also made a subject of examination and inspection by Mr. Whiting. The character of the topography is similar to that of the south side of Martha's Vineyard, except the general elevation of the plains as they slope toward and border on the larger ponds and bays, which extend along the south shore from Southampton to Coney Island, is somewhat less than those on Martha's Vineyard, which more generally end in small banks or terraces, whereas at Long Island the plains border on the ponds at nearly the high-water level.

The nature or degree of the changes since the first surveys, which were among the earliest made, dating back to the period between 1834 and 1845, cannot be stated until a careful comparison is made with the original topographical sheets then executed.

Other service assigned to Mr. Whiting is referred to under separate headings in this section.

*Additions of topographical details to the original surveys of Nantucket and Martha's Vineyard Islands.*—In furtherance of his assignment to the general charge and supervision of the topographical resurveys on the islands of Nantucket and Martha's Vineyard, Assistant Henry L. Whiting has submitted a report of the work executed by him under instructions issued early in July, 1888. This work has consisted mainly in adding to the topographical sheets the several county and town roads which have been laid out and opened on Martha's Vineyard since the original survey was made, in 1845.

The fact of the loss of most of the early triangulation points made it possible to locate these new features in harmony with the original work only by the use of such of the old plane-table points as could be identified, such as the chimneys of conspicuous houses, etc. Much time and labor were required to do this, more than would at first appear, because of the discrimination needed to ascertain by various tests which of the old points were used as bases in the original survey.

Mr. Whiting states that the results in the main have been more satisfactory than he anticipated, and that he has been even surprised at the general coincidence of the old and new work, considering the scanty supply of the early triangulation points, the original survey of the central part of the island having been based on but two points, Prospect and Indian Hill, and these so far apart that they can not be used together in any given section of work. The compass and chain of the early surveys have long been superseded by the plane-table and the telemeter.

The lines of the new roads have been imposed upon the original sheet in red ink without changing or erasing any of the older work, thus affording a comparison of the lay-out of new roads where they follow in whole or in part the directions of former by-roads, farm roads, etc. All of the road resurveys west and north of the central villages of West and North Tisbury were completed; unfavorable weather compelled a postponement of the resurvey of the two new roads in the northeasterly part of the island.

Under a preceding heading in this section reference is made to special surveys for the State of Massachusetts carried on under Mr. Whiting's direction.

*Hydrographic resurveys in Nantucket Sound.*—About the middle of September Lieut. J. M. Helm, U. S. N., assistant Coast and Geodetic Survey, who had relieved Lieutenant Crosby, U. S. N., in the command of the steamer *Gedney*, was instructed to take up a hydrographic resurvey in Nantucket Sound. This work had been fairly begun, when an emergency arose which demanded the recall of the *Gedney* and orders to her commander to proceed to New York and prepare her for service on the Pacific coast. Having been hastily overhauled and fitted out, she left New York for San Francisco November 13, 1888, and arrived in the latter port on the 20th of April following.

Lieutenant Helm was instructed later to organize a party for hydrographic surveys on the Pacific coast, in the vicinity of Cape Orford. (Reference to this service will be found under a heading in Section XI.)

*Hydrographic resurveys in Nantucket and Vineyard Sounds.*—Reference was made in the last Annual Report to the organization of a hydrographic party by Lieut. S. C. Paine, U. S. N., commanding the schooner *Eagre*, to execute parts of the hydrographic resurveys required in Nantucket and Vineyard Sounds.

Soon after the beginning of the fiscal year the *Eagre* was at Hyannisport, Mass., and while there brought up the soundings needed on projection No. 1 as far as Bishop and Clerks Light-House. Work on this projection, with limits from Falmouth to Hyannisport, was finished September 15. The steamer *Daisy*, Ensign F. Swift, U. S. N., in command, joined the party July 9. About the middle of September work was begun on projection No. 4 to the north of Nantucket, and continued till November 2, when the advance of the season made it advisable to suspend further operations. Work on this projection was completed, with the exception of the development of the shoals. That on projection No. 13, Nantucket Harbor, was entirely finished.

To Ensign Swift, commanding the *Daisy*, was assigned the task of resurveying the northern part of Muskeget Channel, joining on with the resurvey of Lieutenant Moser, which has been reported under another heading in this section. This work was laid out on projection No. 3, but owing to the very strong currents, and the difficulty of establishing on the shoals signals that would stand the high winds and heavy seas, the progress made was not entirely satisfactory. The work was, however, finished before the close of the season, with the exception of the development of the shoals.

Lieutenant Paine observes that the season as a whole was not favorable for hydrographic work; that while there was comparatively little fog and rain, high winds prevailed, which made the sea so rough that on many clear days it was impossible to do any accurate work.

In his annual report, and in the descriptive reports accompanying it, are given the location of the tide-gauges established by the party, with statements of the areas of reduction of soundings to which they apply; also such data and information relating to changes in shore-line and channels as will be of value for the Coast Pilot. It is noted that the harbor of Hyannisport is the best and most accessible on the northern shore; there is no trouble for beating in for vessels drawing less than twelve feet of water. The harbor is protected by a breakwater, and the holding ground

is good. Into Nantucket Harbor there is now an eight-foot channel, where before the erection of the jetties there was but six feet.

The officers attached to the party during the season were Ensigns L. M. Garrett, L. S. Van Duzer, Franklin Swift, W. R. M. Field, G. Evans, and R. D. Tisdale, U. S. N. Messrs. A. R. Hasson and Irving King served as recorders.

Following are the statistics:

| | |
|---|---|
| Hydrography: | |
| Area sounded in square geographical miles | 237 |
| Number of miles (geographical) run while sounding | 2,306 |
| Number of soundings | 131,161 |
| Number of tidal stations established | 7 |
| Number of specimens of bottom preserved | 12 |

All the hydrographic projections were upon a scale of 1–20000, except that for Nantucket Harbor, which was on 1–5000.

*Hydrographic resurvey of the approaches to Martha's Vineyard and Nantucket, and resurvey of Muskeget Channel.*—The hydrographic surveys executed by the party in charge of Lieut. J. F. Moser, U. S. N., Assistant Coast and Geodetic Survey, commanding the steamer *Bache*, in the summer and autumn of 1888, were a continuation to the eastward of the surveys made by the same officer during the preceding season. In 1887 work was closed on a line thirteen miles west (true) from No Man's Land; thence south (true) to the twenty-fathom curve. From these limits the off-shore hydrography was continued to the eastward and a resurvey made of Muskeget Channel. The limit to seaward was the twenty-fathom curve, provided that this curve connected the deep-sea lines run by the steamer *Blake;* if they did not connect, then the work was continued seaward until a proper connection was made.

The off-shore work was executed on a scale of 1–40000; the Muskeget Channel work on a scale of 1–20000.

For the off-shore hydrography the system of execution is similar to that of the previous seasons, namely, normals half a mile apart from the shore to a distance of six or seven miles, and thence to the limit a mile apart. This system is crossed by lines beginning at the shore and half a mile apart, this distance being increased seaward until the outer limit is reached, where the lines are about one and one-half miles apart. The boat system connecting the ship lines with the shore varies as the coast demands. Where the coast is rocky, or, rather, has scattered over it great numbers of bowlders, as in the vicinity of Squipnocket Point, the lines are run very close so as to make the development full. From Squipnocket to Muskeget Channel the shore is bold and clear and the system of boat-work more open.

Between the fogs which frequently visit this exposed coast during the summer months, the prevailing winds, which are strong from the southwest, and the usual course of New England weather, the number of working days on this coast are not very many, as a general rule, but the season of 1888 was an unusually bad one, notable for the frequency of high winds, rains, and heavy seas. During July and August fog prevented work for several days at a time.

About the middle of August, as the southwest winds continued to blow very hard, preventing outside work, Lieutenant Moser decided to go to Edgartown and begin work on the resurvey of Muskeget Channel. The limits of the projection for this work were from Muskeget Island to Cape Poge and Wasque Bluff and thence to seaward. Having previously informed himself as fully as possible in regard to the locality by communicating with people who were familiar with it, he was prepared to encounter great natural difficulties in the execution of the survey, and he found the accounts given of these difficulties not at all exaggerated, and that the work was always accompanied by more or less danger.

From Muskeget Island to Wasque Bluff is a distance of over five miles, between which no signal can be erected; a line of shoal water extends between these two points and beyond; Cape Poge is distant from Wasque Point about four miles, and the time of high and low water between these last two points is more than four hours, or more than two-thirds of a tide. The force of the current running to the southward, not only with the velocity of the Sound current (which is very

great) but with rapidly increasing force as it approaches Skiff's Island, can be imagined. It gains its impetus from the difference of water level, further accelerated by the funnels through which it is drawn. In such a current it was found impossible to keep a regular system of lines. A boat would start on a regular line, and before a second position could be plotted she would probably be swept by the current on an adjoining line. The current is not the same in direction over all the work; on the same tide it will vary eight points on different parts of the field. Hence the lines could not be carried continuously; the work had to be done according to the conditions of the weather; when this was exceptionally good the more dangerous portions of the work were done, and the rest at other times as the conditions seemed favorable.

Lieutenant Moser gives in his report full details in regard to the channels, currents, shoals, and other data of interest to the navigator and of value for the Coast Pilot within the limits included in his survey, devoting a large part of his report to the peculiarities of Muskeget Channel, respecting which he observes that few vessels ever use it, and none without a pilot unless by accident. His recommendations for additional buoys at its southern entrance will be duly reported to the Light-House Board.

Referring to the scarcity of aids to navigation on the southern coasts of Nantucket and Martha's Vineyard, Lieutenant Moser remarks that there is no coast light from Sankaty Head to Gay Head, a distance of forty miles, and that the only buoys in the same distance are one on Mutton Shoal, Muskeget Entrance, and three marking the channel between No Man's Land and Martha's Vineyard. He asks why there is not a first-order light on No Man's Land instead of Gay Head, the island just named being one of moderate elevation, admirably situated for a sea-coast light, as it is six miles farther seaward than Gay Head. A light could be placed on the island that would send its rays over the European steamer track. At Gay Head, all that he deems necessary is a fourth-order light as a guide for the entrance to the Sound. Instead of the second-class can buoy now at the Devil's Bridge he recommends a whistling buoy.

It had been Lieutenant Moser's intention to run all the north and south lines to a point on the southeastern side of Nantucket, and then from the above range and angle at No Man's Land, cover the north and south system, but the work at Muskeget occupied the party much longer than had been expected, and it was deemed preferable to finish the work on that sheet, the changes there, from year to year, being probably very great.

The principal tide-gauge was established at No Man's Land, and day tides observed there from July 6 to October 30. A comparison gauge was used at Wasque Bluff, which confirmed the data in the office tide-tables—that the times and heights were approximately the same at these two points. Comparisons of time and height at Wasque Bluff, with data derived from the observations at Cape Poge, made by the party under Lieut. S. C. Paine, U. S. N., Assistant Coast and Geodetic Survey, showed a difference in tide of four hours, with an inappreciable difference in height. At Cape Poge high water was four hours later than at Wasque Bluff or at No Man's Land. For the work off Martha's Vineyard but one tide-gauge was used—that at No Man's Land. For the Muskeget Channel work, owing to the great complication of tides to be dealt with, a system of blocks was employed, the details and limits of which are stated in Lieutenant Moser's report.

Of this exceedingly comprehensive report (B) the foregoing is but a limited extract; the information it gives relative to all of the hydrographic characteristics of the areas under survey will be of great value in the preparation of a new edition of the Coast Pilot for the approaches to Nantucket and Vineyard Sounds.

To the officers and crew of the *Bache* Lieutenant Moser expresses his acknowledgments for their diligent efforts to forward the work. The following named officers were attached to the party during the season: Ensigns W. M. Constant, H. A. Bispham, J. E. Shindel, W. H. G. Bullard, and S. M. Strite, U. S. N.; Passed Assistant Surgeon J. M. Steele, U. S. N., and Assistant Engineer S. H. Leonard, U. S. N. Messrs. Geo. R. Jones and J. L. Dunn served as recorders.

Ensign Bispham had charge of all tidal computations under Lieutenant Moser's direction.

For the season, which began July 2 and closed October 30, 1888, the statistics are :

Hydrography :

| | |
|---|---|
| Area sounded in square geographical miles | 495 |
| Number of miles (geographical) run while sounding | 1,527 |
| Number of angles measured | 9,058 |
| Number of soundings | 39,112 |
| Number of specimens of bottom preserved | 12 |

In December, Lieutenant Moser was instructed to prepare the *Bache* for service off the Florida coast. A report of this duty will be found under a heading in Section VI.

*Hydrographic resurveys and examination in Nantucket Sound.*—Having organized a hydrographic party on board the schooner *Eagre* and the steamer *Daisy* in accordance with instructions issued early in May, 1889, Lieut. W. P. Elliott, U. S. N., Assistant Coast and Geodetic Survey, left New York, May 16, to fill up certain gaps in the hydrography of Nantucket Sound, and to examine the locality of a shoal reported about three and a half miles southeast by south from Bishop and Clerks Light.

As soon as practicable after the arrival of the party at the field of work signals were built and located and sounding was begun. Lieutenant Elliott will present a full report of the hydrography executed at the close of the season. Up to June 30, the date at which the Annual Report closes, the statistics are:

Hydrography :

| | |
|---|---|
| Miles run in sounding | 280 |
| Angles measured | 2,330 |
| Number of soundings | 20,185 |

Ensigns L. S. Van Duzer and E. A. Anderson, U. S. N., were attached to the party of Lieutenant Elliott. Duty previously assigned to that office is referred to under a heading in Section II.

*Topographic resurvey of parts of the north and south shores of Martha's Vineyard.—Also of the shore line of No Man's Land.*—In pursuance of instructions issued early in July, 1888, Assistant John W. Donn organized a party for the resurvey of the north shore of the Island of Martha's Vineyard from Tashmoo (or Chappaquonsett) Pond to Menemsha Bight, thence to Gay Head, and from Gay Head along the south shore to Wec-quobska Cliffs, taking in also the outlying island of No Man's Land. At Tashmoo Pond and Wec-quobska, the extremities of the projected shore line work, junction was to be made with the resurveys of Assistants Whiting and Vinal, which had been previously completed.

Work was begun July 12 at Indian Hill, and advanced east and west along shore, including a margin of topography of varying width, averaging about a quarter of a mile. Upon finishing this work between Tashmoo and Menemsha, the party was moved in August to Gay Head, and an elaborate survey of the cliffs and eastward slope of that locality was made upon a scale of 1–2500, or 25.34 inches to the statute mile. Contour lines were run for every five feet of elevation, thus thoroughly developing the surface. As the weather was generally fair and free from high winds during the progress of this survey, the conditions were very favorable for the completion of a map of Gay Head, which will serve as a true basis for future comparisons.

The heights of several prominent objects were determined by lines of levels connecting them with the bench-mark established by Assistant Henry Mitchell, in 1857, at Menemsha Bight. The base of the light-house tower upon the cliff, and the tops of two large bowlders at the northwest and southwest curves of the shore around Gay Head were the principal points. These bowlders were selected for the purpose of discovering the degree of subsidence of bowlders by the action of the sea, in connection with the receding of the shore.

Upon the transfer of the party to No Man's Land, the shore and cliff-lines of the island were surveyed, and the heights of the principal cliffs were determined, but no resurvey of the interior was made, contours having been carried over the surface by Assistant Whiting in his survey of 1855. The island is entirely bare of trees and covered with grass, so that little or no surface degradation occurs by reason of winds or waves.

After the work on Gay Head cliffs had been finished, the shore line resurvey was taken up from Menemsha around the Head, and along the south coast, together with the cliff work at Squibnocket, Nashaquitsa, and Wec-quobska. This done, the widening of the margin of topography between Menemsha and Tashmoo was begun, with the intention of reaching the tops of the highest hills and ridges overlooking the sound and the sea. But the allotment of funds for the survey having become exhausted by the 20th of October, the work was brought to a close.

Following are the statistics:

Topography:

| | |
|---|---|
| Area surveyed in square statute miles (scale, 1–10000) | 7 |
| Lengths of shore-line in statute miles (scale, 1–10000) | 29 |
| Length of shore-line of ponds in statute miles (scale, 1–10000) | 4 |
| Length of shore-line of creeks in statute miles (scale, 1–10000) | 5 |
| Length of roads in statute miles | 10 |

For the more detailed surveys on the Gay Head cliffs and on No Man's Land, the statistics are:

At Gay Head:

| | |
|---|---|
| Length of instrumental contour lines in statute miles (scale, 1–2500) | 50 |

At No Man's Land:

| | |
|---|---|
| Length of shore-line in statute miles (scale, 1–5000) | 5 |
| Area (approximate) in statute miles | 1 |

After returning from Martha's Vineyard, Mr. Donn received instructions to execute a topographical resurvey of Annapolis Harbor and approaches. Notice of this work will be found under a heading in Section III.

*Topographical resurvey of shore line and adjacent details in Wood's Holl and on the islands in its immediate vicinity.*—Reference was made in the last Annual Report to the assignment of Assistant W. I. Vinal to duty on the coast of Massachusetts under the general direction of Assistant Henry L. Whiting. Having reported to Mr. Whiting, he was directed to take up a topographical resurvey of the vicinity of Wood's Holl, and organized his party for that purpose immediately upon reaching the working ground, June 18, 1888.

This resurvey was to be executed upon a scale of 1–5000, to show the shore-line with adjacent details both inside and outside of high-water mark, and to include the village of Wood's Holl, the islands of Uncatena and Nonamessett, and part of Naushon Island, with the positions of outlying rocks, whether detached or in reefs.

Some delay was encountered at the outset, owing to the disappearance of important stations of the old triangulation in the course of the many changes and improvements since the original survey. The weather was less favorable than usual, the summer being rainy and the months of September and October more than ordinarily stormy and cold. On September 26 occurred a storm which was said to be the most violent and destructive experienced in that region in over forty yers.

The very swift current of the straits, locally known as "The Hole," between Nonamessett Island and the main shore, obliged Mr. Vinal to work with the tides, and thereby often involved delays on days when the weather and tides were favorable for passing through and returning. This current has abraded the north side of Pine Island and the points of Long Neck and Devil's Foot Island to a marked extent.

Field operations were closed November 5, the work not having been quite completed owing to the many drawbacks encountered throughout the season.

A descriptive report has been submitted by Mr. Vinal to accompany his topographical sheet. In this report reference is made to the geological features, the roads, bridges, growth of forests, and other details of interest relating to the region under survey.

Encroachments of the sea, and consequent serious changes in the shore-line on the Buzzard Bay side of Long Neck, and on the mainland, particularly between the Bay and Great Harbor, are prevented by three short breakwaters or walls of stone, built along the high-water ridge.

The low-water line is distinctly defined on the sheet, but, as Mr. Vinal observes, it may be slightly modified in outline when the soundings are plotted.

Following are the statistics of the season:

Topography:

| | |
|---|---|
| Area surveyed in square statute miles | 6 |
| Length of general coast in statute miles (high water 22, low water 23) | 45 |
| Length of shore-line of creeks and ditches, in statute miles | 9 |
| Length of roads and railroads, in statute miles | 28 |

*Topographical resurvey of the Elizabeth Islands, off the coast of Massachusetts.*—During the month of June, 1889, Subassistant E. L. Taney took the field in pursuance of instructions issued May 31, and began a topographical resurvey of the Elizabeth Islands, forming a part of the eastern shores of Buzzard's Bay, Massachusetts.

Between June 8, when he reached the locality of work, and the end of the fiscal year, he was occupied chiefly in a search for and recovery of old triangulation points, putting up numerous signals, and making a plane-table triangulation to determine their position on his topographical sheet.

Further account of his progress will appear in the next Annual Report.

*Determination of the geographical positions of light-houses in Narragansett Bay and approaches.—Identification of a station of the old triangulation at Amesbury, Mass.*—After completing a triangulation of part of the south coast of Long Island, reference to which is made under a heading in the next section, Assistant A. T. Mosman transferred his party, under instructions, to Narragansett Bay, and took up the determination in geographical position of the light-houses on Point Judith, Whale Rock, Conanicut Island, Gull Rocks, Rose Island, Goat Island, Lime Rock, and Wickford Light on Old Gay Rock, Wickford Harbor.

Changes in position of some of these lights or the erection of new structures made these determinations necessary. The work was begun August 12, 1888, and finished August 31. Following are the statistics reported.

Triangulation:

| | |
|---|---|
| Area of in square statute miles | 24 |
| Stations occupied for horizontal measures, number of | 9 |
| Geographical positions determined, number of | 11 |

Mr. Mosman then proceeded to Amesbury, Mass., in order to identify one of the stations of the old triangulation in that vicinity, and so fix its location that it could be marked permanently whenever desirable. A special report of operations executed for this purpose was made September 15, and is on file in the Office.

## SECTION II.

### CONNECTICUT, NEW YORK, NEW JERSEY, PENNSYLVANIA, AND DELAWARE, INCLUDING COAST, BAYS AND RIVERS. (SKETCHES, NOS. 1, 3, 4, 17 AND 18.)

*Triangulation on the south coast of Long Island completed from Great South Bay to Napeague Bay.*—A connected chain of triangulation between Amagansett, near Napeague Bay, Long Island, and Great South Bay was completed during the spring and summer of 1888, by Assistant A. T. Mosman. Reference was made to this work in the last Annual Report. Enough of the old stations were found with the underground marks in good condition to carry forward the resurvey without difficulty.

Thick fogs prevailed on the coast during the last part of July and first part of August, making very unfavorable weather for observing. The work was completed, however, on August 10.

Subassistant E. L. Taney joined the party July 12, while at Shinnecock Bay, and aided in all of the operations until transferred to the party of Assistant Eimbeck, August 23.

The statistics are:

Triangulation:

| | |
|---|---|
| Area of, in square statute miles | 161 |
| Stations occupied for horizontal measures | 25 |
| Geographical positions determined, number of | 71 |

Mr. Mosman's subsequent work on Narragansett Bay is referred to under a heading in the preceding section.

*Completion of the shore-line resurveys of Three-Mile Harbor, Moriches Bay and the outer beach, Long Island.*—At the beginning of the fiscal year the party of Assistant C. T. Iardella, organized for shore-line resurveys in the eastern and southern parts of Long Island, had been in the field since the middle of May. The progress made up to July 1, 1888, was stated in the last Annual Report.

On July 6 Mr. Iardella began a shore-line resurvey of Three-Mile Harbor, which is about four miles to the eastward of Cedar Island Light-house in Gardiner's Bay. This is a fine harbor for small vessels drawing four feet; the entrance being shallow and the channel crooked, vessels of greater draught can not pass over the bar except at high water.

This work completed, a resurvey of the outer beach shore-line, joining that of 1875 of Great South Bay, was begun. The beach shore-line and both sides of the inner shore-line of Moriches Bay from Quantuck Bay to Smith's Point were resurveyed during the remainder of the season. Field operations were closed October 17.

With regard to Moriches Bay. Mr. Iardella notes that it is fourteen miles long and from one to two miles wide, very shoal on each side of the channel, which varies in width from one quarter to one-half a mile. About ten feet of water can be carried from Great South Bay to the entrance of Quantuck Bay.

One of the estuaries of Moriches Bay is Forge River, which is two and half miles long from its mouth to the railroad bridge and about half a mile wide at its entrance. Only vessels drawing not over four feet can go to its head.

Another estuary is Seatuck Cove, used principally by small boats.

One of the most prominent features on the south shore of Moriches Bay is the wreck of the steam-ship *Franklin* of the Bremen line. The event occurred in 1854, and the iron frame of the ship, with part of its ribs attached, stands about twenty-five feet out of water, and can be seen from the deck of a large vessel ten miles from the shore. It is about ninety-five metres (three hundred and twelve feet) from high-water mark, and about two and five-eighths miles to the eastward of Forge River Life-saving Station.

The statistics of the work from July 6 to the end of the season are as follows:

Topography:

| | |
|---|---|
| Area surveyed in square statute miles | 17 |
| Length of general coast line in statute miles | 90 |
| Length of shore-line of rivers in statute miles | 10 |
| Length of shore-line of creeks in statute miles | 10 |
| Length of shore-line of ponds in statute miles | 3 |
| Length of roads in statute miles | 19 |

The results of the work are shown on two topographical sheets, each on a scale of 1-10000.

*Hydrographic examination of the entrance into Jamaica Bay, south side of Long Island.*—In order to ascertain the extent of the changes in the channel into Jamaica Bay since last survey, Assistant Joseph Hergesheimer was directed to make a hydrographic examination of the entrance. He left Philadelphia September 24, 1888, and having obtained a suitable sounding boat from the Coast Survey steamer *Endeavor*, then at the Brooklyn Navy-Yard, he began the work without delay.

Since the topographical survey of the locality made by Mr. Hergesheimer in 1885, his examinations in 1888 disclosed the following as the more important changes: A new buoyed channel along the Coney Island shore; the extension to the southward of the sand banks on the west side of the entrance into Jamaica Bay; the working to the westward of the west end of Rockaway Beach; the decrease of water on the main bar, and the existence of very shoal water about the bar, upon which four mid-channel buoys were found.

In regard to the sand flats south of Coney Island and to the westward of the main channel entrance into the bay, Mr. Hergesheimer thinks that they would soon develop into a fixed piece of land, and be a protection to Coney Island, were it not that the sand is carried away by the large number of schooners that get their supply of sand from that locality.

Field operations were closed October 19. The changes determined are shown on the map, which has been sent to the Office with the records of the survey. Following are the statistics:

| | |
|---|---|
| Hydrography: | |
| Miles (geographical) run in sounding | 61 |
| Number of angles measured | 386 |
| Number of soundings | 5,024 |

Duty assigned to Mr. Hergesheimer during the following winter on the Florida coast will be referred to under a heading in Section VI.

*Observations of currents in New York Lower Bay.*—In accordance with instructions issued early in the spring of 1889, supplemented by detailed instructions from the Hydrographic Inspector, the party under command of Lieut. William P. Elliott, U. S. N., Assistant Coast and Geodetic Survey, having been organized on board the schooner *Eagre* and steamer *Daisy*, with three steam-launches assisting, left New York May 7, and proceeded to the Lower Bay to obtain observations of currents. The plan outlined for the work was to occupy three positions off Coney Island simultaneously, each position to be occupied for twenty-five consecutive hours, using the *Eagre*, the *Daisy*, and a launch. A tide-gauge to be erected at a convenient wharf on the island, the readings of gauge to be taken simultaneously with the current observations every fifteen minutes, and the zero of gauge to be referred to a permanent bench-mark.

Under the date of May 12 Lieutenant Elliott reported that these instructions had been fully complied with, the tide-gauge having been set up on West Brighton Pier, Coney Island. Three series of observations of currents had been obtained, the first and third of twenty-five hours each; the second series, intended to be of that duration also, was interrupted by a violent squall.

Upon the completion of this duty, Lieutenant Elliott returned to New York and soon after left for Chatham, Mass., to prosecute a resurvey in Nantucket Sound. Reference to this service has been made under a heading in Section I.

Ensigns L. S. Van Duzer and E. A. Anderson, U. S. N., were attached to the party of Lieutenant Elliott.

*Establishment of meridian lines and standards of length at Binghamton, N. Y., and at Montrose, Pa.*—In compliance with requests received from the authorities of the city of Binghamton, Broome County, N. Y., and of the town of Montrose, Susquehanna County, Pa., Assistant James B. Baylor was instructed towards the end of June, 1888, to establish at those places true meridian lines and standards of length.

Upon arriving at Binghamton, and after consultation with the City Engineer, Mr. Baylor laid out the meridian line by two days' observations on the sun, and marked it by two solid posts of granite, sunk three feet in the ground, and set in broken stone and Portland cement, so as to free them from the effects of frost. The points defining the ends of the lines are indicated by crosses cut in two copper bolts set in granite posts.

A standard of measure, one hundred feet in length, was marked on an iron bar, welded in one solid piece, the lengths on this bar being marked by fine lines on small copper bolts set in it securely. Measures of ten feet up to one hundred were marked on the bar by the aid of two one hundred feet steel tape lines, using a tension of eight pounds applied with a spring balance at the extreme end of each tape. These tapes had been previously tested at the office in Washington, and corrections were furnished for each measure of ten feet by the Bureau of Weights and Measures.

In view, however, of the slight changes of length which these tapes are liable to when wound and unwound, Mr. Baylor suggests that an iron rod having a line measure of ten feet marked upon it would be preferable. This rod should be of the same material and of about the same shape as the one hundred feet standard, so that the effect of temperature, under the same conditions, would be the same. He recommends also the marking of a six-feet line measure on this rod in order to be able to mark this length on the one hundred feet standard, sixty-six feet being the length of the chain generally used by land surveyors.

The one hundred feet standard at Binghamton was mounted in the court-house yard upon a wooden frame work, and covered by a box neatly painted. The whole structure was substantially built, and the box securely locked, the key being deposited with the sheriff of the county. It is

readily accessible to any authorized surveyor or civil engineer who may desire to test his steel tape or chain.

After the completion of this work, July 10, Mr. Baylor proceeded to Montrose, Pa., and upon consultation with the county officials, established a true meridian line in the grounds of the county court-house by two days' observations upon the sun. The line was marked in the same way as the one at Binghamton. A standard measure 50 feet in length was marked on the stone coping of the court-house, using the steel tapes already referred to.

Both at Binghamton and at Montrose the entire cost of the work and materials was borne by the authorities. In view of the very moderate sum required, not exceeding $125 at Binghamton, and less than $100 at Montrose, Mr. Baylor suggests that the establishment of similar lines for determining the variation of the compass and similar standards of measure at each principal county seat in the United States would be extremely useful, and by their aid in preventing much tedious and expensive litigation would many times defray their cost.

Having received instructions to take up the regular magnetic field-work of the Survey, Mr. Baylor, on July 19, proceeded to Cleveland, Ohio, his first magnetic station. References to the stations which he occupied in the course of this duty will be found under headings in Sections II, III, VIII, IX, XIII, XIV, XV, and XVI.

*Continuation of tidal record by means of automatic tide-gauge at Sandy Hook, New Jersey.*—The new series of tidal observations with automatic tide-gauges at Sandy Hook, New Jersey, begun December 1, 1886, was continued successfully during the year. For the first six months the station was in charge of Mr. J. G. Spaulding, an experienced observer, and for the six months following in charge of Mr. David E. Snead, who had received some instruction at the Office supplemented by work at the station under Mr. Spaulding's direction.

A spirit-level has been furnished to the observer with which he runs frequent lines of level to refer the zero of staff to the several bench-marks in the vicinity, so that the continuity in altitude of the series may be checked. A cabin has been built for him near the gauges so that he can give them the constant attention often required at that exposed station.

*Continuation of the triangulation in northeastern Pennsylvania required to complete the Pamlico-Chesapeake-Lake Ontario Arc of the Meridian.*—A connection of the triangulation resulting from geodetic operations in the State of Pennsylvania with the triangulation crossing the State of New York has been kept in view for some years past; one result of this connection when it is finally effected being the completion of the Pamlico-Chesapeake-Lake Ontario Arc of the Meridian.

This work having been intrusted to Assistant F. Walley Perkins, by instructions dated July 7 and 19, 1888, he proceeded to Wilkesbarre, Pa., on July 23, where he was joined the following day by Prof. Louis H. Barnard, Acting Assistant. Recorder D. P. Halsey reported for duty July 26.

Having organized his party, arrangements were made by Mr. Perkins for the occupation of Penobscot Mountain, a commanding point four miles south of Wilkesbarre. The instruments were immediately mounted, and heliotropers posted at the eight stations surrounding which were included in the scheme.

Penobscot overlooks the country to the north of it as far as the State boundary, eastward into Pike County, southward into Carbon and Schuylkill Counties, and westward to the Susquehanna.

Owing chiefly to the immense amount of fuel consumed in this coal mining and manufacturing region, the atmosphere is probably at all times unfavorable for observations, but, as Mr. Perkins reports, particularly so during the summer and autumn of 1888 on account of the unusual amount of rainy and cloudy weather. This prevented the successful use of the heliotropes and greatly retarded progress. He recommends that hereafter night signals be employed, so that results adequate to the time and energy given to the work by the observers may be obtained.

Professor Barnard took great interest in the work, but was called away from the party August 22, and was unable to return. Economy in expenditures demanded the detail of Mr. Halsey as a heliotroper and of the foreman to instruct and enforce close attention to their stations on the part of the heliotropers, so that Mr. Perkins for the greater part of the time occupied the stations unaided.

Observations were completed at Penobscot Mountain October 30, and the party disbanded November 3.

For the season the statistics are:

Triangulation:

| | |
|---|---|
| Area of, in square statute miles | 1,375 |
| Signal poles erected, number of | 4 |
| Observing tripods and scaffolds built, heights of | 5 to 12 feet |
| Stations occupied for horizontal and vertical measures, number of | 1 |
| Elevations determined trigonometrically, number of | 8 |

In November, Mr. Perkins was instructed to continue the reconnaissance and triangulation in Alabama from the limits of the preceding season towards the Gulf of Mexico. Mention of this service is made under a heading in Section VIII.

*Corrections in and additions to the topographic and hydrographic surveys of the Delaware River, made necessary by changes which had occurred since former surveys.*—During the time between July 17 and October 10, 1888, Assistant R. M. Bache was engaged in carrying out certain work preliminary to making additions of topographical and hydrographical details to the surveys of the Delaware and Schuylkill Rivers which had been executed in the years 1879 and 1874. This work consisted in finding numerous subsoil station marks on both rivers, replacing five tide-gauges, and determining for Assistant J. Hergesheimer's work, one trigonometrical and some plane-table points.

On October 10, having received final instructions, he began to organize a party which was afterwards employed in both topography and hydrography, although unequal to executing the latter to the best advantage on account of the smallness of its numbers. The season of beginning being late, and the sweep of the winds unobstructed on the Delaware, all of the work was executed under difficulties. By the 21st of November, however, most of the topographical details of the old chart had been corrected on the Delaware from Fisher's Point to the head of Smith's Island (the most important part of the river), and soundings had been made over the same area amounting to one thousand eight hundred and fourteen casts of the lead.

On the 22d instant, the party was reduced in numbers, and after a slight pause of preparation, the transit work from Bridesburg to Market street, where, for the most part, plane-table work can not be done to advantage, was begun, the bad weather being utilized for office-work. On the 8th of January, 1889, this work was finished between the points mentioned, with the exception of a space between Tioga, Station 2, and the Kensington Water Works. It includes correction of the whole wharf-face of the city within that range, except for the distance just mentioned, which had to be postponed to a more favorable season.

The remaining portion of the original party was then discharged, and office-work was begun, including computation of transit work, and the copying, reduction, and plotting of soundings.

Mr. Bache has submitted with his report a blue-print of the area covered. The positions of the soundings, as represented thereon, are projected upon the original map, but are not marked upon it in figures, since the map must go into the field again.

When completed, a copy of the map, embodying all the additions and corrections made, will be deposited with the authorities of the city of Philadelphia, by whose aid in contributing to the pay of Mr. Bache's experienced and valuable assistant, Mr. N. B. Craig, the work was greatly expedited.

During the winter and spring, the drawings for the large scale-map on 1–1200 derived from the transit work on the water front of the city were continued by Mr. Craig under Mr. Bache's direction. One map, as the result of this work, was sent to the office, and a duplicate of it placed in the hands of the city authorities. A second map of the series has been finished, but not yet duplicated.

The new appropriation for field-work not being available till the end of the fiscal year, the plane-table revision could not be resumed till July 1, 1889. Reference to its progress will be made in the next Annual Report.

*Topographic and hydrographic resurvey of the Schuylkill River, from Fairmont Dam to the Delaware River.*—Changes in shore-line and new works of construction on the Schuylkill River, involv-

ing changes in its topographic and hydrographic features, having rendered a resurvey advisable, Assistant Joseph Hergesheimer was directed, early in October, 1888, on the completion of duty referred to under a previous heading in this section, to begin work on the Schuylkill.

Between October 21 and December 10, 1888, when field-work was suspended for the season, he made a resurvey of the topography of the river on a scale of 1-4800 from Fairmont Dam to Gray's Ferry and of the docks, adjacent railroads and bridges, from Gray's Ferry to the Delaware. A second map of the series has been finished, but not yet duplicated.

Later in the winter he was assigned to field duty on the western coast of Florida, a report of which appears under a heading in Section VI.

On returning north he resumed the Schuylkill River resurvey, June 6, 1889, and completed the topography, scale 1-4800, between Gray's Ferry and the Delaware River, comprising the banks, marshes, and low-water line by June 21. Taking up next day the hydrographic resurvey at Fairmount Dam, on the same scale, he completed it to the Delaware a few days after the close of the fiscal year.

Mr. Hergesheimer reports the statistics of the entire resurvey as follows:

| | |
|---|---|
| Topography: | |
| Miles of high-water line surveyed | 17 |
| Miles of marsh line surveyed | 15 |
| Miles of low-water line surveyed | 12 |
| Miles of bank line surveyed | 8 |
| Length of bridges surveyed, in miles | 2 |
| Length of railroad surveyed, in miles | 6 |
| Hydrography: | |
| Miles run in sounding | 32 |
| Angles measured | 235 |
| Number of soundings | 3,067 |

*Physical hydrography.—Continuation of the observation of ice formation and movement in Delaware River and Bay.*—Under instructions dated in October, 1888, Assistant S. C. McCorkle made the usual preparations for resuming observations of the formation, lodgment, and movement of ice in Delaware River and Bay, and also of the temperature and density of sea-water at the Delaware Breakwater.

At the Breakwater, observations were begun November 1, 1888, and continued to March 31, 1889, by Mr. A. P. Ingram, superintendent of the Philadelphia Maritime Exchange.

Through the kindness of Commander John J. Read, U. S. N., Light-house Inspector, Fourth District, permission was obtained from the Light-House Board to make available the services of the light-keepers on the river and bay for observations of the ice movement. Messrs. Henry Winsor & Co.; Capt. W. B. Gallagher, Superintendent of the Philadelphia and Reading steam colliers, and Capt. H. E. Melville, Superintendent of the City Ice-boats, kindly proffered assistance in the observations.

Books of record were furnished in all these cases, but in consequence of the very mild winter but few records were made.

At the end of March, 1889, the Superintendent of the City Ice-boats reported that at no time during the winter did he have a full crew on either of his boats, and that but two applications for service were made during the season. The first ice appeared December 23, and disappeared on the 30th; the next appeared February 13, and disappeared February 20; the third crop of ice appeared February 24, and disappeared on the 28th. There was no obstruction to navigation during the season.

Observations were kept up, however, at sixteen stations, in order to complete the record and make it comparable with that of three previous winters. One more season's work, Mr. McCorkle observes, will furnish a full series of observations for five successive years.

The records and reports have been transmitted to the Office.

Reference is made toward the close of Part II, of this volume, to the charge of the suboffice at Philadelphia, which was continued with Mr. McCorkle.

## SECTION III.

### MARYLAND, DISTRICT OF COLUMBIA, VIRGINIA, AND WEST VIRGINIA, INCLUDING BAYS, SEA-PORTS, AND RIVERS. (SKETCHES Nos. 1, 4, 15, 17, and 18.)

*Topographical resurvey of Annapolis Harbor and Roads.*—Late in October, 1888, Assistant John W. Donn was instructed to organize a party for the topographical resurvey of Annapolis Harbor and Roads. Triangulation points about Annapolis being scarce, an effort was made to extend a plane-table triangulation from the old Kent Island base-line across the Chesapeake to the entrance to Severn River, and a special projection was made for that purpose, but upon examination of the locality, Mr. Donn found that no points upon that well-known line were in existence.

The position of the south end, which had been established about fifty metres from the shore-line as it was in 1853, was found to be under water, and distant from the present shore-line about ten metres. The north end, though located upon high ground about one hundred metres from the shore, had also disappeared, and the mound which once encircled the monument had been leveled with the surrounding ground. No clue remained by which an approximation to the position could be reached, and as no one living in the neighborhood had ever seen the stone which marked it, the conclusion was that it had been removed or destroyed during the civil war.

It became necessary, therefore, to obtain an independent base, and a favorable locality having been found on Greenbury's Point, a line about a mile long was established by repeated measurements with steel tape. From this base-line a triangulation was extended, expanding to the west and south so as to cover all the points approximately determined by Lieutenant Wood, U. S. N., Assistant Coast and Geodetic Survey, during the progress of his hydrographic survey in 1888. The accuracy of this triangulation was tested by determining as points in the scheme the positions of two stations of the old triangulation, spire of St. John's and State House, the correspondence being found perfect in distance. Data were thus derived for carrying forward a topographical resurvey upon a scale of 1-10000 of the shores of Annapolis Roads and Severn River from Tally's Point and Hackett's Point to the county bridge above the Naval Cemetery.

A detailed survey of the Naval Academy grounds, including the cemetery and farm, and country lying between, was made on a scale of 1-50000. Contour lines for every five feet of elevation were run over the entire area. A detailed survey on the same scale was also made of Bay Ridge; this survey covered Tally's Point, and included the railroad terminus and other properties of the Bay Ridge Company located there.

Statistics of the work, which closed with the month of January, are as follows:

Topography:

| | |
|---|---|
| Area surveyed in square statute miles | 3 |
| Length of shore-line in statute miles | 13 |
| Length of roads in statute miles | 4 |
| Length of contour lines in statute miles | 15 |

Mr. Donn acknowledges the facilities for furthering the work granted by the liberality of the authorities of the Naval Academy. A steam launch was furnished; office quarters within the Academy grounds were provided and the use of such additional instruments and implements as were needed was tendered. Especial courtesy was shown by Commander Sampson, Lieutenant-Commander Walker, and Lieutenant Very.

Work executed by Mr. Donn on the Island of Martha's Vineyard is referred to under a heading in Section I.

*Connection by geodetic leveling of the tidal bench-marks at Annapolis, Md.*—A critical examination and test measures having been found desirable to ascertain carefully the elevation above half-tide level in the Chesapeake of the tidal bench-marks established at Annapolis by Assistant Perkins in 1875, and by Lieutenant Wood in 1888, Assistant Andrew Braid was instructed to proceed to Annapolis in December, 1888, and connect these bench-marks by lines of leveling of precision.

The bench-mark of 1875 at Annapolis had been established by Assistant Perkins as a reference mark for the lines of geodetic leveling run by him in that year between Washington and Annapolis. The bench-mark of 1888 was established by Lieutenant Wood in connection with his hydrographic resurvey of Annapolis Harbor and approaches, an account of which appears under another heading in this section.

Other bench-marks which had been established in the years 1844, 1852 and 1853, and 1870, were searched for, but were not found, descriptions of locality having failed to be recorded in two cases, and in the third case the building on which the mark was made having been torn down.

The connections made by Mr. Braid were confined, therefore, to the bench-marks of 1875 and 1888, and the results of his observations as discussed in the Office show a satisfactory agreement in the elevation of these bench-marks above half-tide level in Chesapeake Bay.

On December 7 he returned to Washington and resumed his regular office duties, reference to which is made under the heading "Coast and Geodetic Survey Office," towards the close of Part II of this volume, and also in his annual report, which forms part of Appendix No. 4.

*Hydrographic resurvey of Annapolis Harbor and approaches.*—Upon the completion of the hydrographic resurvey of Cape Charles and vicinity, referred to under a subsequent heading in this section, Lieut. M. L. Wood, U. S. N., Assistant Coast and Geodetic Survey, commanding the steamer *Endeavor*, took up, under instructions, similar work in Annapolis Harbor and approaches.

This resurvey, begun August 17, 1888, was finished September 1, and was executed on a scale of 1–10000. For the reduction of the soundings a tide gauge was established near the end of Market Square Basin. Tidal observations at this gauge, begun August 16, were kept up till September 18.

In his descriptive reports (A and B) submitted with his hydrographic sheet, Lieutenant Wood observes that it is probable that the differences found between his resurvey and the survey of thirty-five years ago are due more to the greater closeness of the recent work than to actual changes in the hydrography, since the bottom is of mud, the rise and fall of the tide less than one foot, and the tidal currents very gentle. The main channel into Annapolis Harbor has a least depth of eighteen and seven-tenths feet at mean low water in two places, one off Greenbury Point, the other farther in.

In the execution of the work Lieutenant Wood acknowledges the aid received from Commander W. T. Sampson, U. S. N., Superintendent of the Naval Academy, with whom arrangements were made, as directed by the Hydrographic Inspector, to furnish three steam launches for running sounding lines.

For the entire season, including the work at Cape Charles and vicinity, the statistics are:

Hydrography:

| | |
|---|---|
| Area sounded in square geographical miles | 230 |
| Number of miles (geographical) run while sounding | 1,759 |
| Number of angles measured | 19,472 |
| Number of soundings | 92,866 |
| Number of tidal stations established | 3 |
| Number of specimens of bottom preserved | 4 |

Ensigns Edward Lloyd and E. A. Anderson, U. S. N., were attached to the *Endeavor*. Draughtsman W. C. Willenbucher was attached as an observer, at Lieutenant Wood's request, from August 16 to 31, and assisted materially in the progress of the work.

After laying up the *Endeavor* at the New York Navy Yard, Lieutenant Wood resumed his duties at the Office in Washington on October 2.

*Continuation of the detailed topographical survey of the District of Columbia.*—Early in February, 1889, in pursuance of instructions, and after the completion of work in Annapolis Harbor, which is referred to under a preceding heading in this section, Assistant John W. Donn resumed the topographical survey of the District of Columbia in the region about Rock Creek, lying in the northwest corner of the District. Part of the work in that portion had been done several years before, but it was left unfinished because of the urgent need of completing the survey in localities

nearer the city limits. Some time was required, therefore, to recover bench-marks and extend lines of leveling through the Rock Creek Valley and make proper connections with lines formerly run along the Brookville road on the west and the Seventh street road on the east.

Topographical work was begun in the vicinity of Shepherd's House, near the latter road, and Swann's, adjacent to it, and carried into the Rock Creek Valley westward to the northwest boundary line of the District and southward to a junction with the old work of 1882 and 1883 in the vicinity of the crossing of the old Milkhouse Ford road. The survey was then extended back from the valley over the woodland to the east and north until the rapidly growing foliage in the early part of May compelled an abandonment of the wooded country, whereupon the open ground lying near the northwest corner was taken up and completed.

Early in June the work was brought to a close, owing to the exhaustion of the allotment set apart for Mr. Donn's party. The area covered during the season was about seven hundred acres. Other details beside the contour work were not of sufficient amount to report for so brief a season.

In addition to the charge of the work of his own party, Mr. Donn (who had at the outset of the District survey and for some years after been in sole charge of it) was directed to exercise a general supervision of the work in progress by the parties of which Assistants Wainwright and Hodgkins and Aid Flemer were chiefs. He visited those parties when practicable, and reports that he always found the work progressing satisfactorily and with all due accuracy. Service assigned to Mr. Donn earlier in the fiscal year on the coast of Massachusetts is referred to under a heading in Section I.

*Continuation of the detailed topographical survey of the District of Columbia.*—Assistant D. B. Wainwright has made a full report of the work executed by him in continuation of the detailed topographical survey of the District of Columbia during the fiscal year. Having organized his party September 1, 1888, in pursuance of instructions, he took the field with a projection, scale 1-4800, the upper limit of which corresponded with a line starting on the Eastern Branch of the Potomac at the outskirts of Anacostia, and running thence southeasterly through Fort Stanton to the boundary of the District, while the lower limit corresponded with a line starting on the Eastern Branch shore a short distance below the grounds of the Government Insane Asylum, and running thence southeast through the junction of Nichols Avenue and Hamilton Road to the boundary.

Mr. Wainwright describes at some length in his report the characteristic features of the country covered by his survey, the greater part of it consisting of an elevated plateau, which forms the water-shed between the Eastern Branch and Oxon River Creek. At its upper end this plateau is two hundred and eighty feet in elevation, but descends abruptly a hundred feet near the junction of Stanton and Hamilton Avenues, and then maintains for the rest of its area an elevation of one hundred and seventy to one hundred and eighty feet above high water.

In executing topographical work upon a scale requiring the greatest accuracy of delineation the method pursued is described by Mr. Wainwright as follows: The plane table having been set up in a position where the largest amount of detail could be seen, the leveling instrument was placed in its vicinity, and the height of the instrument determined from the nearest bench-mark. The target of the level rod was then set so as to give the reading of the nearest five-foot contour, and the rodsman proceeded to station himself at some point on the contour line where it changed its direction. The exact position, as far as height is concerned, was found when the rodsman indicated by signals whether the rod was too high or too low. This having been done the telemeter rodsman took his place, the telemeter was read from the plane table, and the point was plotted on the sheet. While the reading of the telemeter was being taken the level rodsman had occupied a new station and was followed in turn by the telemeter. In this way the course of the contour along the ground was obtained with all of its various windings. When one contour had been run over as far as could be seen the level rod was set for another, and when the length of the rod was exhausted the level was moved higher or lower to suit the case until all of the detail which could be readily obtained from the plane table was completed.

In very moist weather, when the plane table could not be used to advantage, lines of level were run, bench-marks established, and other necessary details of field work attended to.

At the close of the fiscal year the survey was still in progress. The statistics to that date are:

Topography:

| | |
|---|---|
| Area surveyed in square statute miles | 25 |
| Length of shore-line of rivers in statute miles | 13 |
| Length of shore-line of creeks in statute miles | 5 |
| Length of roads in statute miles | 12 |
| Number of bench-marks established with under-ground marks | 4 |
| Number of bench-marks established on other permanent objects | 51 |
| Number of miles of standard levels run forward and back, one or more times | 19½ |
| Number of miles of levels run on standard lines and between bench-marks | 14½ |

Mr. Wainwright appends to his report a map showing the area covered by his survey. He acknowledges the hearty and intelligent co-operation in the work of all the members of his party. Mr. J. T. Gibson served as levelman; Mr. R. A. H. Clark as level rodman, and Mr. W. H. Hindmarsh as telemeter rodsman.

*Continuation of the detailed topographical survey of the District of Columbia.*—The topographical party under the direction of Assistant W. C. Hodgkins, organized for the prosecution of the large scale survey of the District of Columbia, began work September 1, 1888, in the open ground in the vicinity of Isherwood, just outside of the northeastern part of Washington, between Benning's Road and C street.

After the completion of this small area the work in the vicinity of Benning was taken up in continuation of the work of the year before. From this point the survey was extended to the southwest along the Anacostia Road to a point a little below the railroad bridge, and from this point a nearly rectilinear margin of topographic detail was finished in a southeasterly direction to the District line.

Near the boundary the work crossed the Bowen Road, and this was surveyed to the point where it leaves the District, which is a little northeast of its junction with the Ridge Road and between that road and Benning's Road. The Ridge Road was surveyed throughout its whole length from the Anacostia Road to the Bowen Road. On the Benning's Road the survey was extended from the bridge across the Anacostia to the Jones Chapel church, a little beyond the junction of Central Avenue.

Between these different roads and the river bank the topography was filled in solidly, as far as the weather and the nature of the country would permit.

The survey was still in progress at the close of the fiscal year. Following are the statistics up to that date:

Topography (scale 1-4800):

| | |
|---|---|
| Area surveyed in square statute miles | 2 |
| Length of shore-line of rivers in statute miles | 4 |
| Length of streams in statute miles | 9 |
| Length of roads in statute miles | 22 |
| Topographic sheets, number of | 3 |
| Leveling, miles of level lines run for the determination of bench-marks | 25 |
| Bench-marks, number of stone posts placed in position and determined in elevation | 24 |

*Continuation of the detailed topographical survey of the District of Columbia.*—The fourth party organized during the year for the continuation of the large-scale topographical survey of the District of Columbia was assigned to the charge of Aid J. A. Flemer. He took the field September 1 with a projection (scale 1-4800) comprising the area east of the Eastern Branch of the Potomac and north of Anacostia. The northeast boundary line of this area is a line due southeast from the east end of the Baltimore and Potomac Railroad bridge; its southeast boundary is the southeast boundary line of the District; its southwest boundary is a line due southeast through the

triangulation point on Fort Stanton; and its northwest boundary is the western shore line of the Eastern Branch.

After occupying the two available triangulation points, Ricketts and Poplar Hill, and several other stations determined by re-section, and after a number of bench-marks had been established by the aid of standard lines of leveling, which were run from the bench-mark at the Government Printing Office (the initial point of all lines of leveling in the District Survey), actual topography was begun the middle of September, and at the close of the fiscal year was still in progress.

Two sketches accompany the report submitted by Mr. Flemer, one showing the area of topography surveyed, the other the disposition of the standard level lines. With regard to the stone bench-marks established during the year, the elevations of which have been obtained directly from the level lines, Mr. Flemer has made a separate report, which is adverted to again under the following heading in this section.

In addition to these permanent primary bench-marks, numerous secondary bench-marks, determined in height with equal care, were established. Some of these consisted of stationary objects already present in the field, such as culvert copings, levy-court stones, boundary stones, etc.

For the fiscal year the statistics of Mr. Flemer's work are as follows:

Topography:

| | |
|---|---|
| Area surveyed in square statute miles | 2 |
| Length in miles of private and wood roads | 11 |
| Length of shore line of rivers in statute miles | 4 |
| Length of shore line of creeks and brooks in statute miles | 11 |
| Length of public roads in statute miles | 9 |
| Length of railroad tracks | 4 |
| Length of horse-car tracks | 1 |

*Establishment of permanent bench-marks for the topographical survey of the District of Columbia.*—In the course of the detailed topographical survey of the District of Columbia, carried on between the years 1880 and 1887, in charge of Assistant John W. Donn, checked lines of spirit-leveling were run along roads, railways, and streams, and a number of bench-marks established with great care and accuracy upon which the elevations of the five-feet contour lines of the survey are primarily based.

During these years, however, it was found that many of the bench-marks were fast disappearing, owing partly to their having been unlawfully and maliciously disturbed, and partly to the gradual obliteration of characteristic marks and features by which they were to be identified.

In order therefore to establish at different localities a series of permanent bench-marks, secured by reference marks which would be likely to remain undisturbed, Mr. J. A. Flemer, Aid, was directed early in July, 1888, to submit a scheme for the placing of these bench-marks, with plans and descriptions, consulting the Engineer Commissioner of the District of Columbia with regard to them, and securing his approval before undertaking the execution of the work.

This having been done, the bench-marks, consisting of granite blocks about three feet in length and between five and six inches in cross-section, dressed down on top to surfaces four inches square, and designated by numbers, were sunk in the ground to nearly a level with the surface in places where it was improbable that they would be disturbed. With each one of these bench-marks, marks were placed six feet due south from their center, and three feet underground, these underground reference marks consisting of cobble-stones (unless otherwise indicated in the descriptions), with a drill hole in the center, to show the exact point the elevation of which had been determined. All elevations of these permanent benches were carefully checked by reference to old bench-marks which had remained unchanged in position.

As Mr. Flemer's instructions did not relieve him from office duty, the main work of placing the new marks in position and of determining their elevetions devolved upon Mr. Atlee Johnson, aided by Peirce Butt, Mr. Flemer taking general supervision of the work, inspecting, testing, and checking it.

Field operations began July 6 and ended August 31, 1888.

The statistics are:

| | |
|---|---|
| Bench-marks with underground reference marks established, number of..... | 48 |
| Bench-marks re-determined ..... | 80 |
| Lines of spirit-leveling run to check existing bench-marks, length of in miles... | 10 |

Descriptions of the marks, with lists of their elevations have been transmitted to the Archives.

*Location of wharves in the Potomac River for additions to the charts.*—Early in August, 1888, Mr. B. A. Colonna, Assistant in charge of the Office, volunteered to make a trip down the Potomac River in the sharpie schooner *Spy*, recently constructed for the use of the Survey in the shallow waters along the Gulf coast, and in the course of this trip, to locate a number of wharves along the river so that they could be shown upon the charts.

He had also in view a test of the sailing qualities and arrangements for the work of the *Spy*. These he found all that could be desired, and to the hydrographic inspector, Lieut. Commander W. H. Brownson, U. S. N., Assistant Coast and Geodetic Survey, he expresses his appreciation of the close attention given by him to the details of her construction.

Fourteen wharves were located by Mr. Colonna during this trip, and they have since been marked upon the charts. On August 11 he brought the *Spy* to her berth at the Navy-Yard, and then resumed his duties at the Office.

*Hydrographic resurveys and examinations in the vicinity of Cape Charles, Virginia.*—The organization of a party for hydrographic resurveys and examinations in the vicinity of Cape Charles, Virginia, by Lieut. M. L. Wood, U. S. N., Assistant Coast and Geodetic Survey, commanding the steamer *Endeavor*, was referred to in the last Annual Report.

Very full descriptive reports (A and B) of the work accomplished have been submitted by Lieutenant Wood. These reports are accompanied by sketches showing the localities of the resurveys, the limits of the hydrographic sheets, and the location of the tide-gauges established: they give also many details of interest relating to changes in channels, improvements made or in progress, anchorages, tides, and tidal currents.

Since the survey made thirty-five years ago, many changes have taken place in the hydrography in the vicinity of Cape Charles. Lieutenant Wood makes the following statements with regard to the results of his resurveys:

"The least depth in the channel across the shoals making out from Cape Charles is about twenty-three feet at mean low water. This depth is found twice at the southern end near where Nautilus Shoal is given on the charts, and also at the upper end where an arm makes out from the Inner Middle Ground, forming what the pilots call the False Channel. I believe this survey has found deeper water than was ever known to exist in this locality.

"The general opinion among the pilots is that there is a less depth than seventeen feet at the upper end of the 'False Channel.' As no pilot has taken a vessel through these shoals for some years, it is difficult to ascertain the history of any changes that may have taken place.

"For this new channel I suggest the name of 'Northwest Channel' to distinguish it from the old 'North Channel' of the charts.

* * * * * * *

"The shape of the inner middle ground has changed completely and the direction of its axis has shifted from about NNW. to NW. by N.

"Some portion of these changes may be due to more accurate plotting of the lines of soundings and I should recommend for close comparison the replotting of the old survey of thirty-five years ago on this same sheet. The old tower on Smith Island has disappeared."

The extracts from Mr. Wood's report above given refer to that part of his resurvey included in projection No. 1 (scale 1–20000) extending from Ship Shoal Inlet to Cape Henry. For the reduction of soundings on this sheet a tide-guage was established at Fisherman's Inlet. The soundings plotted on the adjoining projection (No. 2, scale 1–20000) were reduced to the same plane of reference. This projection as well as No. 1 included the entrance to the Chesapeake and on the Bay shore extended from Old Plantation Inlet to Cape Charles. With regard to the North Channel, as developed by Lieutenant Wood's survey, he observes:

"The North Channel of the chart has a depth of twenty-four and one-half feet on either side of a new shoal, with fourteen feet of water over it, that was developed by this last survey.

"Another channel west of the Inner Middle Ground has a least depth of twenty-two and one-half feet at its upper end. The pilots called this channel 'False Channel,' and said that there was a depth of only seventeen feet now where I succeeded in finding twenty-two and one-half feet of water. This channel is a continuation of the new channel on sheet No. 1, for which I have suggested the name of 'Northwest Channel,' and by which several miles of distance can be saved for vessels from the northward bound up the Bay as soon as a proper buoyage is established.

"The western part of the North Channel of the chart, which follows the eastern edge of the Inner Middle Ground, will be a straight and practicable passage after it has been marked out by a few buoys. The upper end of the North Channel connects with a deep hole south of Old Plantation Light-house.

* * * * * * *

"The new fourteen-foot shoal that I have mentioned as having been found in the North Channel seems to have been unknown as a detatched shoal. As it was previously unknown and is abreast of the farm of a Mr. Latimer, I suggest that it be given the name of Latimer's Shoal in default of a better title."

Projection No. 4 included a hydrographic resurvey of Magothy Bay and Fisherman's Inlet (scale 1-10000). Fisherman's Inlet has a narrow crooked channel, with a depth at mean low water of seven and one-quarter feet. It changes with every gale, so that it was not thought worth while to put in very close work on this unfrequented place.

On projection No. 5 were plotted the results of the hydrographic resurvey of Horse Shoe Shoal, the changes on which, as Lieutenant Wood observes, are important only hydrographically, and not for purposes of navigation.

No work was attempted on projection No. 4.

Attached to the *Endeavor* were the following named officers: Ensigns W. M. Constant, Edward Lloyd, and E. A. Anderson, U. S. N., all of whom assisted in the survey with marked skill and energy. Pay Yeoman R. T. Clover and Seaman W. H. De Luce served as recorders.

For the season, which began May 3 and closed August 7, the statistics show a large amount of work accomplished. They are made out to include the hydrography of the resurvey of Annapolis Harbor and Roads, which was undertaken immediately after the completion of the resurveys at Cape Charles and vicinity and which was finished September 1.

An account of this resurvey will be found under a preceding heading in this section.

*Physical hydrography.—Observations of ocean currents off the Capes of Virginia and between Nantucket and Cape Hatteras.*—Upon the return north of the steamer *Blake*, after the close of the season of Gulf Stream Explorations in 1889 (see Section VI), her commander, Lieut. J. E. Pillsbury, U. S. N., Assistant Coast and Geodetic Survey, took up, under instructions, an investigation of the deep-sea currents between Nantucket and Cape Hatteras, making Norfolk his base of operations and the currents off the Capes of Virginia the first subject of his observations.

This work, begun towards the end of April, 1889, was in active progress at the end of the fiscal year, and a full account of it is necessarily delayed until the next Annual Report.

The following-named officers were attached to the *Blake* during the season: Ensign R. M. Hughes, U. S. N., executive officer: Ensigns Harry Kimmell, C. S. Stanworth, J. E. Shindel, and and Philip Andrews, U. S. N, observers; Assistant Engineer W. W. White, U. S. N., Assistant Surgeon Thos. Owens, U. S. N., Pay Yeoman N. G. Henry and Ship's Writer W. H. de Luce, served as recorders.

Other service assigned to Lieutenant Pillsbury is referred to under headings in Sections I and VI.

## SECTION IV.

NORTH CAROLINA, INCLUDING COAST, SOUNDS, SEA-PORTS, AND RIVERS. (SKETCHES Nos. 1, 5, 6, 17, and 18.)

*Supplementary work incidental to the special hydrography for the State of North Carolina.—Surveys and investigation of oyster beds.*—Reference was made in the last Annual Report to the completion of the special investigations relating to oyster beds in the sounds and estuaries of North Carolina, carried on by Lieut. Francis Winslow, U. S. N., Assistant Coast and Geodetic Survey, during three years. Lieutenant Winslow's full report was published as Bulletin No. 10

of the Survey, with the title: Report on the Sounds and Estuaries of North Carolina with reference to Oyster Culture.

After the detachment of Lieutenant Winslow from the Survey in March, 1889, Ensign J. C. Drake was ordered to take charge of his party and relieve him in the command of the schooner *Scoresby* in order to execute such supplementary work as might be needful. This consisted in remarking such triangulation stations as had been recovered and used during the oyster bed surveys, in marking out and staking off the limits of the natural oyster beds in the Sounds of the State, and in locating the areas entered by the citizens of the State for propagation of shell-fish.

All of the records of the work, including descriptions of the triangulation stations as remarked by the *Scoresby*, were transmitted to the Office. A copy of these descriptions was forwarded to the Secretary of State of North Carolina, who is, *ex officio*, Shell Fish Commissioner.

Towards the end of the fiscal year Ensign Drake was instructed to close field operations and proceed with the *Scoresby* to Norfolk, Va.

## SECTION V.

SOUTH CAROLINA AND GEORGIA, INCLUDING COAST, SEA-WATER CHANNELS, SOUNDS, HARBORS, AND RIVERS. (SKETCHES Nos. 1, 5, 6, 17, and 18.)

*Recovery and re-establishment of stations of the triangulations of* 1849, 1857, *and* 1865 *for the extension of a tertiary triangulation, topography, and hydrography up the Cooper, Ashley, and Wando Rivers, South Carolina.*—Some question having arisen in regard to the identification of stations occupied in the vicinity of Charleston, S. C., during the progress of the surveys made in 1849, 1857, and 1865, Assistant C. O. Boutelle, whose long service in that section and knowledge of localities was well known, was instructed toward the end of January, 1888, to proceed to Charleston and aid Assistant Ellicott in establishing the bases desired for carrying his surveys up the Cooper, Ashley, and Wando Rivers.

In pursuance of this assignment, Mr. Boutelle reached Charleston January 25, and having provided himself with the necessary drawings, measurements, and descriptions of stations, began his examination without delay, Mr. Ellicott accompanying him. Before leaving Washington he had procured from the Light House Board a drawing showing the position occupied by the light-house of 1856 upon the parapet at Fort Sumter. The angles of that historic fort remain now as then, the work having been simply reduced in height. The center of the light-house had been one of Mr. Boutelle's triangulation points in 1857, called in his records Fort Sumter 2. This was recovered with precision, though it was hoped that the necessity of going so far down the harbor for a base could be avoided. This proved to be the case as the examination proceeded; it was found that of the triangulations of 1849, 1857, and 1865, there remained unharmed by fire or earthquake seven points in the city. Mount Pleasant Light (1859) and Castle Pinckney 2 (1865) were also identified, and, after furnishing Mr. Ellicott with an ample number of bases and azimuths to prosecute the surveys called for in his instructions, Mr. Boutelle returned early in February to duty at the Office.

*Triangulation in the vicinity of Charleston, S. C., and up the Cooper, Ashley, and Wando Rivers.*—Having organized his party and arrived at Charleston, S. C., in pursuance of instructions, Assistant Eugene Ellicott took charge of the schooner *Ready* toward the end of January, 1889, and having, with the aid of Assistant Boutelle, recovered the site of the old stations established by that officer, Sumter and Castle Pinckney, he began the tertiary triangulation, topography, and hydrography assigned to him in the vicinity of Charleston, taking those stations as a base.

Between the 1st of February and the end of March, when field operations were suspended for the season, Mr. Ellicott redetermined old points in that vicinity, established a number of new points, and carried his triangulation up the Cooper River for upwards of ten miles, up the Ashley five miles, and five miles up the Wando. All of the stations were well marked and so described as to be available for future reference. The statistics are:

| | |
|---|---|
| Number of signals erected | 33 |
| Number of stations occupied | 26 |
| Number of objects other than signals determined | 12 |

Duty assigned to Mr. Ellicott earlier in the fiscal year is referred to under a heading in Section I.

*Selection of a site for an automatic tide-gauge on Tybee Island, Savannah River entrance.*—A long series of tidal observations at or near Savannah, Ga., upon which to base the prediction of tides at that port and on the adjacent coast being much needed, Mr. J. G. Spaulding, an observer of many years experience, was directed to proceed to that vicinity about the middle of March and make careful examinations of the river at and below Savannah and of the coast about the river entrance, in order to determine upon the most desirable site for the location of an automatic tide-gauge.

It was found that, although a site on the river would have some advantages, the first cost and the cost of maintaining a permanent structure being less than at a location on the coast, exposed to the violence of storms, yet the desirability of obtaining a series of observations unaffected by the fluctuations of the river due to other than tidal causes, led to a final decision in favor of a station on Tybee Island at a point a short distance to the northwest of Tybee Light.

It is expected that the pier and gauge house will be finished and the gauge in operation about October 1, 1889.

## SECTION VI.

PENINSULA OF FLORIDA, FROM ST. MARY'S RIVER ON THE EAST COAST TO AND INCLUDING ANCLOTE ANCHORAGE ON THE WEST COAST, WITH THE COAST APPROACHES, REEFS, KEYS, SEAPORTS, AND RIVERS. (SKETCHES Nos. 1, 7, 17, and 18.)

*Physical hydrography.—Gulf Stream explorations.—Observations of currents in* 1888 *and* 1889.—Instructions issued to Lieut. J. E. Pillsbury, U. S. N., Assistant Coast and Geodetic Survey, commanding the steamer *Blake*, early in December, 1888, directed him to continue his work of the previous winter in the exploration of the Gulf Stream. This involved the gauging of the current that enters the Caribbean Sea, the investigation of the strength of the current along the Spanish Main, and examinations of the strength of the currents to the northward of the Bahama Islands.

Lieutenant Pillsbury's report of his Gulf Stream current work of 1887 was published as Appendix No. 8 to the Annual Report for that year. His work of 1888, beginning in January, and including observations of currents outside of the Bahama Islands; between the Great Bahama Bank and Cuba; in the Windward Channel; in the Mona, Anegada, and Windward Island Passages; and in the Equatorial Stream between Barbadoes and Tobago, was briefly adverted to in last year's Annual Report. It was deemed advisable, however, in view of the somewhat unexpected character of some of the results obtained during this cruise to postpone their publication until further observations could be made in the same or nearly the same localities. Data derived from the cruise of 1889 confirm in all important particulars the results of the cruise of the year before, and the very full and interesting report of Lieutenant Pillsbury, embodying conclusions derived from the work of both years, appears as Appendix No. 15 to this volume.

The *Blake* left New York January 7, and upon arriving at Anegada Passage, January 19, began the observations, which were continued with but slight interruptions until the end of the fiscal year. While in the Caribbean Sea the weather was abnormally good, the trade winds were light, and the sea comparatively smooth. During the months of May and June the *Blake* was occupied in current observations north of Cape Hatteras; in May the weather was exceptionally fine, but very unfavorable during June. The apparatus used was the same as that devised by Lieutenant Pillsbury and described by him in Appendix No. 14, 1885, with the modifications referred to in Appendices No. 11, 1886, and No. 8, 1887.

During the two seasons eleven anchorages for observations of currents were made outside of the Caribbean Sea—one north of Barbadoes, two east of the St. Lucia Passage, and eight between Barbadoes and Tobago, the last eleven anchorages being all within the limit of the Equatorial Stream.

For the details relating to the results of observations at the several anchorages the reader is referred to Lieutenant Pillsbury's report. The general conclusions which he has arrived at are as follows:

"The trade-wind seems to cause a surface current in its direction, and in all the passages of the Windward Islands an inflow exists to a greater or less extent. In addition to this flow, there is a

large volume entering all the passages from the break of the waves. In passages on the northern side of the Caribbean there is no fixed current.

"Passing across the Caribbean, the obstruction of Honduras and Yucatan causes an elevation (probably very slight, however) and a flow through the natural outlet of the Straits of Yucatan and Straits of Florida, thus forming the Gulf Stream proper.

"The courses of the currents between the Bahama Islands and Cape Hatteras indicate that the Gulf Stream receives large additions from the Atlantic flow.

* * * * * * *

"The position of the axis of the stream seems to be fairly well located in the vicinity of No. 3 anchorage (off Cape Hatteras), but from all the evidence of mariners, a strong current is often experienced farther south, sometimes broad and sometimes narrow. There seems to be a sub current generally setting in the proper direction of the stream even when the surface flow is opposite. It is probable that the former overcomes the latter, making a surface current to the northward, that is, the increase in width of surface flow comes from below, but the cause or the time of these expansions can not now be stated."

With regard to the connection between this expansion of the stream and the declination of the moon, the time of the moon's transit, and the meteorological condition of the atmosphere, Lieutenant Pillsbury is of the opinion that this connection is not fully supported by evidence, although there are indications that it is influenced, if not governed, by the forces referred to. Many more observations, he remarks, are needed to determine the question.

The officers attached to the *Blake* during the season were: Ensigns R. M. Hughes, Harry Kimmell, C. S. Stanworth, J. E. Shindel, Philip Andrews, U. S. N., observers; Assistant Surgeon Thomas Owens, and Assistant Engineer W. W. White, U. S. N., recorders. Pay Yeoman N. G. Henry and Ship's Writer William H. de Luce served also as recorders.

Lieutenant Pillsbury reports the following statistics for the six months' work of his party ending June 30, 1889:

Physical hydrography:

| | |
|---|---|
| Number of anchorages for observing currents | 39 |
| Number of observations of currents | 2,577 |
| Number of observations of temperature of sea-water | 2,535 |
| Number of miles steamed by the *Blake* | 11,850 |

Work of Lieutenant Pillsbury in progress at the end of the fiscal year is referred to under a heading in Section II; duty assigned to him on the New England coast in 1888 under a heading in Section I.

*Hydrographic surveys in the Bay of Florida, in the approaches to the Florida Reefs, and on the Northwest Channel Bar, Key West.*—Lieut. J. F. Moser, U. S. N., Assistant Coast and Geodetic Survey, commanding the steamer *Bache*, has submitted descriptive reports (A and B) of the hydrographic work executed by him or under his direction in the Bay of Florida, in Barnes Sound, and on the Northwest Channel Bar, Key West, during the winter and spring of 1889. These reports present full statements relative to every feature of the hydrography. No point has been left untouched, and the reports may be said to be exhaustive in their character. Space is available here for only a general summary of the work accomplished, with some extracts giving Lieutenant Moser's views and conclusions in his own words. The hydrography executed by his party from Cedar Keys to Light-House Point, near Appalachee Bay, is referred to under a heading in Section VII.

The *Bache* arrived at Key West January 8, 1889, and after coaling and taking on board the necessary stores and signal material proceeded to Bahia Honda, where work was begun January 11. Later the *Bache* was joined by the schooner *Spy*. This light-draught vessel was of great service in shoal-water hydrography.

During the preceding winter Lieutenant Moser closed work on the west coast of Florida, coming from the northward to a line from Cape Sable to Sandy Key, and thence to East Bahia Honda Key. This year he continued the hydrography from this line into Florida Bay and Barnes

Sound to the Reef Keys, and between the keys wherever passage-ways existed, connecting with the work previously executed, including the Knights Key Channel and Spanish Key Channel. These are the *only two recognized channels east of Key West in which six to seven feet of water* can be carried from the Reefs to the Gulf. These channels and adjoining waters, as far as a line northwest from Stirrup Key, were developed by a system of lines northwest and southeast, four to the mile, and crossed by a series of lines, northeast and southwest, three to the mile. The remainder of the work in this locality was developed by a single series of lines, five to two miles, in a northwest and southeast direction, excepting where passages occurred, and then special developments were made.

Lieutenant Moser describes the chief hydrographic characteristics of the water areas and channels surveyed; discusses at some length the character of the bottom and the extent of changes since former surveys, the coral formations and their geological history, the relation of the exposed land to the water surface, and gives full information respecting the tides, stating the location of tide-gauges established and the methods of observation adopted to obtain planes of reference for the soundings, keeping in view the complex nature of the tidal phenomena. Following is an extract from his report:

"The difference in the time and range of tides on the Gulf side and the reef side is so great that the current runs between the keys with great velocity. In the deep water to the westward of Knights Keys, and between Long Key and Conch Key, the rips are very heavy, and during spring tides there are over-falls that might swamp a small boat.

* * * * * * *

"It is generally believed that the rise and fall of the Gulf is very small, and that there is but one tide a day; on the west coast of Florida this is not the case. There are two tides each day, and they are of the nature of the Pacific coast tides in so much as they show an inequality each day in the rise and fall. I have not the exact figures to refer to, but approximately the tides on the reef side rise and fall about 1.5 feet, on the Gulf side about 3.5 to 4 feet, and the difference in high and low water is from three to four hours, and all this is subject to great interference from wind and sea."

Alluding to the difficulties attending the obtaining of correct data for the tides on these coasts, he repeats his former recommendation for establishing permanent gauges at suitable stations.

With regard to triangulation marks he observes that the iron screw-piles put down at a number of points on the reefs and keys thirty years ago were found still standing and apparently in excellent condition. These he regards as the most durable surface marks that can be used on the Florida coast.

Respecting a rock reported as a danger to navigation Lieutenant Moser makes the following statement:

"I would call attention to the fact that a rock or head somewhere between Rachael Key and Hog Island was not found. We could obtain no definite information concerning it. The limits in which we were told it was situated, from different statements, included about 4 square miles; nor could we find any one who could place us near it, or who knew anything definite about it.

* * * * * * *

"A search was made, however, and every boat had instructions to keep a careful lookout for any dangers, but none were discovered."

In the latter part of March Lieutenant Moser left with the *Bache* for Cedar Keys, having directed Ensign Franklin Swift, U. S. N., in charge of the party on the *Spy*, to continue the hydrographic survey of the reefs.

Following is a list of the officers attached to the parties on board the *Blake* and the *Spy*:

Ensigns Franklin Swift, H. A. Bispham, R. D. Tisdale, and S. M. Strite, U. S. N.; Passed Assistant Surgeon J. M. Steele, U. S. N.; Assistant Engineer S. H. Leonard, U. S. N. Messrs. George R. Jones, J. L. Dunn, and J. McC. Tiffany served as recorders.

Lieutenant Moser commends specially the able and zealous service rendered by Ensign Swift, who has since been detached from the Survey.

The statistics of the season's work will be given with the abstract of the hydrographic survey executed in April and May off the Florida coast to the northward of Cedar Keys. (See Section VII.)

For the Florida Bay and Reef work the results are plotted upon four hydrographic sheets as follows:

Big Spanish and Knights Key Channels, Florida Reefs, scale 1-20000; Florida Bay, scale 1-40000; Sombrero Key Light to Northwest Passage Light, Florida Reefs, 1-40000; Examination of Northwest Bar, Key West Harbor, 1-10000.

Hydrographic surveys in the approaches to Martha's Vineyard and Nantucket made by Lieutenant Moser earlier in the fiscal year are referred to under a heading in Section I.

*Topographical survey of the west coast of Florida between Cape Sable and Pavilion Key.*—In continuation of the topographical survey of the west coast of Florida, Assistant Joseph Hergesheimer proceeded under instructions to Manatee, Fla., towards the end of December, 1888, where he took charge of the schooner *Quick* and began the repairs needed to fit her for the use of his party during the season.

Leaving Manatee January 19, 1889, he sailed for Pavilion Key, stopping at Punta Rasa for supplies and signal lumber. The topographical work was begun at Pavilion Key, February 2, and was carried thence to the west end of the primary base line at Cape Sable, where on the 20th of April it was completed. It covered fifty-two miles of coast, and included the general coast line with the outlying islands and reefs and the entrances to all the principal creeks. This entire work was done with great care and accuracy. Much time was spent in determining and marking points with which to carry the survey inland, these markings being made by means of triangulation signs (△) cut in the coquina rocks, and by stakes of sawed lumber. Of the fourteen triangulation points which had been established on land during a former season thirteen were found intact; from the remaining one the ground and the markings had been washed away. The eight original water-signals used in marking the triangulation points had disappeared; the worms and seas had destroyed them. Seven new ones were put up for the execution of the topographic survey, and were determined in position from the shore stations.

Mr. Hergesheimer reports unusually bad weather during the season. This, with the necessity of anchoring outside on an open coast, with no harbors available for shelter, was one of many obstacles he had to contend with. The anchor chains were parted three times, but in each case the anchor was recovered, except off Northwest Bar, Key West. Here the loss of the anchor was made good by Lieut. J. E. Pillsbury, U. S. N., Assistant, Coast and Geodetic Survey, commanding the steamer *Blake*, who happened to be in Key West at the time.

In its general character the coast from Pavilion Key towards Cape Sable is a succession of out-lying, low mangrove islands, fringed with coquina reefs, and on the side of the gulf covered at high water. Inside of the islands the coast is somewhat regular in outline, consisting of low mangrove shores, cut up by creeks and rivers, with an occasional ridge of sand, parallel to the general coast line and dry at high tide.

Other details relative to the character of the country, its agricultural productions, inhabitants, etc., are given in Mr. Hergesheimer's report.

He was aided in the work by Subassistant J. H. Gray, whose services he states were all that could be desired.

The statistics are (scale of sheets 1-20000):

Topography:

| | |
|---|---|
| Miles of coast line surveyed | 52 |
| Miles of shore line surveyed | 146 |
| Number of water signals erected | 7 |
| Number of points determined with the plane table and marks for future use | 239 |

Service assigned to Mr. Hergesheimer during the year on the coasts of New York and Pennsylvania is referred to under headings in Section II.

## SECTION VII.

PENINSULA OF FLORIDA, WEST COAST, FROM ANCLOTE ANCHORAGE TO PERDIDO BAY, INCLUDING COAST APPROACHES, BAYS, AND RIVERS. (SKETCHES NOS. 1, 6, 17, and 18.)

*Off-shore hydrographic survey between Cedar Keys and Light House Point, west coast of Florida.*—As stated in the abstract given of Lieutenant Moser's hydrographic work in the Bay of Florida and vicinity, under a heading in the preceding section, that officer left a portion of his party on board the schooner *Spy* the latter part of March, 1889, to continue the reef work, and proceeded in the *Bache* to Cedar Keys to connect the inshore hydrography or three fathom curve with the ten-fathom curve between Cedar Keys and Light House Point.

The nature of this work and the means adopted to execute is clearly stated in the following extract from Lieutenant Moser's report:—

"The waters along this coast, from Anclote (Anchorage) to Appalachee Bay, shoal very gradually, and the ten-fathom curve is from thirty to forty miles off shore. The shore being very low, is in most cases out of sight at the three-fathom curve. To put up signals on this coast for the purpose of simply locating the inner ends of the lines would have required a long time, not to speak of the difficulties in transporting the lumber over such long distances. As the manner of executing this work was left to my discretion, I concluded to locate the lines by astronomical observations, particularly as there were no outlying dangers. I therefore adopted a system of lines two miles apart and, in order to give the greatest weight to meridian altitudes, laid them true east and west. The chronometers were also well rated by telegraph for longitude.

"We found, however, after commencing work that by standing well into the shore we were able to recognize certain topographical features, such as points of land, woods, keys, and a few houses that were on our sheets. By the usual methods we were therefore able to locate the inner ends of the lines quite accurately. When the conditions were very favorable we anchored barrel buoys on the inner ends of the lines, and in this manner obtained very good results. I may therefore say that the lines are located by angles on located shore objects and astronomical positions."

To obtain a plane of reference for the soundings a tide gauge was put up in the Steinhatchee River, and comparisons were made outside of the mouth in three fathoms of water in Deadman's Bay, and in six fathoms south of Ocklohonee Shoal. The comparison in deep water, though not entirely satisfactory, gave sufficient results to warrant the use of the observations on the Steinhatchee gauge for all of the work.

From Cedar Keyes north the bottom is quite regular as far as Deadman's Bay, but in the approaches to Appalachee Bay a change of depth of a fathom is not infrequent beyond the six-fathom curve.

Lieutenant Moser refers to the extensive sponge fishery in this part of the coast, which is known to the sponge fishermen as the "Bay." Here they assemble in fleets soon after the 1st of April; the water is then perfectly clear and the bottom plainly visible at depths of seven fathoms. These bay sponges are a coral sponge, and are said to be the best in the Florida market.

After finishing the work in this section, April 29, Lieutenant Moser returned to Key West to make a survey of Northwest Channel Bar. He found there a large party under the U. S. Army Engineers, who were making tidal and current observations and borings with a view to the improvement of the channel. As they had established an elaborate set of signals, application was made for their positions, and these having been furnished through the kindness of the officer in charge, they were connected with points determined by the survey. In the course of the work, which occupied about a week, a rock was found in the narrowest part of the main ship-channel. Its position was determined, and it has since been marked by a horizontal striped buoy. (*See* Notice to Mariners, No. 115, May 31, 1889.)

The hydrographic work of the season having been completed, Lieutenant Moser closed field operations May 14, and soon after proceeded north, arriving at New Bedford, Mass., May 24.

The following-named officers were attached to his party: Ensigns Franklin Swift, H. A. Bispham, R. D. Tisdale, and S. M. Strite, U. S. N.; Passed Assistant Surgeon J. M. Steele, U. S.

N., and Assistant Engineer S. H. Leonard, U. S. N. Messrs. George R. Jones, J. L. Dunn, and J. McC. Tiffany served as recorders.

For the hydrography (off-shore) between Cedar Keys and Light-House Point the results are shown on two projections, scale of each 1–80000.

The statistics of the season are:

Hydrography:

| | |
|---|---|
| Area sounded, in square geographical miles | 2,500 |
| Number of miles (geographical) run while sounding | 3,143 |
| Number of angles measured | 11,644 |
| Number of soundings | 102,602 |
| Number of tidal stations established | 3 |
| Number of specimens of bottom preserved | 34 |

Hydrographic surveys made by Lieutenant Moser on the coast of Massachusetts earlier in the fiscal year are reported under a heading in Section I.

*Triangulation of Perdido Bay and its connection with the triangulation of Pensacola Bay, Fla.*—In anticipation of the beginning of the triangulation of Perdido Bay, Assistant John B. Weir, to whom the charge of the work had been originally assigned in December, 1888, had sent Mr. E. E. Torrey, foreman, and Mr. A. B. Simons, recorder, to that locality on reconnaissance duty, and to make arrangements for the transportation of instruments and camp equipage.

Subsequently, upon the resignation of Mr. Weir, Assistant A. T. Mosman was assigned to the charge of the party; Subassistant F. H. Parsons was directed to report to him for duty, and also Subassistant P. A. Welker, who was assigned to the survey of portions of Pensacola Bay under Mr. Mosman's direction.

Field work was begun at the earliest date practicable by a search for points of the old triangulation in the vicinity of Pensacola Entrance, and the stations Navy-Yard Wharf and Fort Pickens having been recovered, a scheme of triangulation westward from this base through the lagoon towards Perdido Bay was laid out. Much delay was caused by the non-arrival of the schooner *Transit*, and the time required to have the steam launch assigned to the party repaired at the navy-yard. Hence it was the 30th of January before the party arrived in camp on Perdido Bay ready for work.

At this camp Mr. Welker, with his party of four men, joined with Mr. Mosman, and assisted him in opening the lines needed to connect the triangulation through the lagoon from Pensacola Bay with that to be done at Perdido.

Mr. Mosman observes that the timber on this neck of land is very heavy and the ground swampy. The launch, after five days' service, became useless by the breaking of the shaft, so that the only means of transportation left the party were the flat-bottomed skiffs made at Perdido. These were without sails, and the long pulls, 5 miles each way, and the hard work of the opening lines all day, combined with a prevalence of cold, rainy weather to make progress slow.

But by February 15, one quadrilateral across the neck was ready for observing; Mr. Welker and party then returned to Washington and took up the work where but little cutting was necessary.

The scheme laid out for Perdido Bay required cutting through heavy timber on nearly all of the lines, and also the erection of tripods from twenty to forty feet in height, to enable Mr. Mosman to observe the angles needed.

Over sixteen miles of cutting was done, and five tripods and sixteen other signals were erected before March 15, at which date observations of horizontal angles were begun. Between this date and March 30, when instructions were received to suspend field operations for the season, fifteen stations were occupied and an azimuth was measured at station Bear.

All records and computations of the work have since been turned in to the office.

Mr. Mosman reports a very important change in the entrance to Perdido Bay, caused by the cutting through at the narrow part of Ono Island of a channel for boats. What was formerly hard land covered with large pines is now a channel over three hundred metres wide and with water ten feet deep. By the old channel the distance from the inlet to Bear Point was about eight

miles; this channel is now filling up and the distance from the inlet by the cut is reduced to a mile and a half. At the time of the survey, but four feet could be carried through the bay inside the cut to Bear Point, and the channel was narrow and rather crooked, but the water was constantly deepening from the action of the currents.

Above Bear Point there is deep water up the main bay to Millview, where large saw-mills are located; and also up Bay La Launch, where the timber for the mills is cut. From this bay there is a road across to Bon Secour River, and the distance is said to be but five miles. A connection across this neck of land can be made with Mobile Bay by direct measurement or by triangulation. A connection can also be made by measurement from station Cotton near Perdido Entrance to Mobile Bay.

For the season, the statistics are:

| | |
|---|---|
| Reconnaissance: | |
| Area of, square statute miles | 17 |
| Lines of intervisibility determined as per sketch submitted | 51 |
| Triangulation: | |
| Area of, square statute miles | 17 |
| Signal poles erected, number of | 16 |
| Observing tripods and scaffolds built, number of | 5 |
| Observing tripods and scaffolds built, height of, feet | 15 to 40 |
| Days occupied in opening and verifying lines of sight, number of | 55 |
| Stations occupied for horizontal measures, number of | 15 |
| Geographical positions determined, number of | 21 |

Duty executed by Mr. Mosman earlier in the fiscal year on the coast of Long Island is referred to under a heading in Section II.

*Triangulation, topography, and hydrography in Pensacola Bay and branches.—Triangulation between Pensacola and Perdido Bays.*—The work of the party placed in charge of Subassistant P. A. Welker in co operation with the party of Assistant Mosman on Pensacola and Perdido Bays has been referred to under the preceding heading.

Mr. Welker's party was organized and his work begun on the triangulation between Pensacola and Perdido Bays on January 16, 1889. Referring to the heavy cutting required in order to obtain lines long enough to give triangles of a good figure, Mr. Welker says that the timber grew to a height of one hundred feet and consisted mainly of pine, live-oak, and water-oak, some of it standing in almost impenetrable swamps. Observations of horizontal angles were completed between February 25 and March 25; unfavorable days during this period being utilized in erecting signals and preparing for the topographic survey of Bayou Grande, a tributary of Pensacola Bay. This topographical survey was begun March 26. The geographical position of Pensacola Light-house and the derrick in the Pensacola Navy-yard having been determined, the position of a scaffold in a very high tree on the bayou was located, and these three points were used for determining the position of flags placed in trees from the mouth to the head of the lagoon. Fifty-four flags were erected for plane table and hydrographic purposes, all of which were located with the plane table. The bayou being narrow, and the land very heavily timbered, a triangulation of any value could not have been executed without involving a great deal of time and expense.

On April 16, the topographic survey having been finished, the hydrography of the bayou was begun, and by April 20 it was completed. Mr. Welker then moved his party to Pensacola, and, in accordance with instructions, prepared to take up a special survey for the Navy Yard Site Commission on Escambia Bay, Florida. Reference to this work will be made under the heading of Special Operations towards the close of this part of the Report.

With regard to the triangulation needed for a resurvey of Pensacola Bay and tributaries, Mr. Welker observes that very few, if any, of the old points can be recovered, and that to continue the work up Pensacola Bay to the heads of East Bay and Escambia Bay, either a new base line will have to be measured, or a new scheme of triangulation carried up the bay from the line Fort Pickens–Navy Yard Wharf. A supplemental topographic survey should follow the triangulation to show the many changes and improvements on the bay since the surveys between 1856 and 1881.

Mr. F. A. Young served faithfully as recorder during the entire season. The topographic work was executed satisfactorily by Mr. Charles H. Deetz under Mr. Welker's direction.

For the entire season the statistics are as follows:

| | |
|---|---|
| Reconnaissance: | |
| Area of, in square statute miles | 15 |
| Lines of intervisibility determined as per sketch | 20 |
| Number of points selected for scheme | 11 |
| Triangulation: | |
| Area of, in square statute miles | 15 |
| Signal poles erected, number of | 7 |
| Observing tripods built, number of | 2 |
| Days occupied in opening and verifying lines of sight | 16 |
| Stations occupied for horizontal measures | 9 |
| Topography: | |
| Area surveyed, in square statute miles | 7 |
| Length of shore line of bayous, in statute miles | 29 |
| Length of shore line of creeks and marsh, in statute miles | 19 |
| Length of roads, in statute miles | 13 |

One topographic sheet was on a scale of 1-10000, the other on 1-5000.

## SECTION VIII.

ALABAMA, MISSISSIPPI, LOUISIANA, AND ARKANSAS, INCLUDING GULF COASTS, PORTS, AND RIVERS.
(SKETCHES Nos. 1, 6, 8, 17, and 18.)

*Occupation of stations for the extension of the primary triangulation in Alabama towards the Gulf of Mexico.*—In continuation of his work of the season of 1888, Assistant F. W. Perkins was directed to resume charge of the triangulation laid out to extend the Oblique Arc of the Meridian from Atlanta towards Mobile. At the first station, Weogufka, about thirty-three miles north of Montgomery, observations were begun December 5, 1888, but were not finished until January 17, 1889, owing in great measure to the almost constant mist, fog, and rain which prevailed for forty-one days out of sixty at the outset of the season.

Station Jamison, about seventeen miles to the westward of Weogufka, was next occupied, and observations were continued here until March 5, under very discouraging circumstances, however, as regards weather. At both stations horizontal and vertical angles were observed.

Mr. Perkins states, as the results of his experience in this section that the primary triangulation, involving observations over lines greater than ten miles in length, can be prosecuted advantageously only during the months of April, May, and June. Detailed examinations for reconnaissance, the building of signals, opening lines, making triangulations with sides under ten miles, and topographical surveys, can be accomplished during the months between November and April.

For the season, the following statistics are reported:

| | |
|---|---|
| Triangulation: | |
| Area of, in square statute miles | 1,400 |
| Signal poles erected | 3 |
| Days occupied in opening and verifying lines of sight | 5 |
| Stations occupied for horizontal and vertical measures | 2 |
| Geographical positions determined | 1 |
| Elevations determined trigonometrically | 7 |

Mr. Perkins observes that these results but illy represent the amount of energy expended and hardship endured, but that they are even thus great is due largely to the persistence and faithfulness of Extra Observer W. B. Fairfield, who suffered no opportunity to be lost.

Other duty on the Gulf coast assigned to Mr. Perkins is reported under a subsequent heading in this section.

*Extension of the line of levels of precision from Little Rock, Ark., towards the western boundary of the State.*—The connection of a bench-mark in the city of Little Rock, Ark., by a line of leveling of precision with a bench-mark of the Mississippi River system of geodetic leveling at Arkansas City having been completed in 1887–'88, as mentioned in the last Annual Report, Assistant Gershom Bradford was instructed early in July, 1888, to proceed to Little Rock and confer with Prof. J. C. Branner, State geologist, in regard to the extension of the line of precise levels along or near the course of the Arkansas River towards the western boundary of the State.

It was desired also to obtain permission from the Division Superintendent of the Missouri Pacific Railway to have his trains stop to take up and put down the leveling party when working on the line of the road, but this official absolutely refused to stop his trains or extend any courtesy whatever. This action led to much delay in the progress of the work at the outset.

Mr. Bradford's health having become much impaired by the extreme heat of the weather, he was relieved from duty at his own request and instructed to turn over the charge of the party to Subassistant Isaac Winston, who would continue the work and report upon it at the end of the season. Subassistant P. A. Welker, having been ordered to report for duty in the party, joined it July 20.

Mr. Winston took charge of it August 1. The constants of geodesic levels Nos. 2 and 3 had been previously determined; also those of the leveling rods A, B, C, and D. The leveling was begun at the bench-mark West Base, established during the preceding season at Argenta, Ark., by Subassistant J. E. McGrath.

The method of observing was the one adopted for the standard levels of the Survey; the forward measurement being made by one observer and the backward measurement by another. Fortunately a wagon road ran close to the railroad nearly all the way, so that the party were able to use a hired conveyance during most of the season.

Work in this section during the heat of summer entailed a severe strain upon all of the members of the party, the men suffering specially. At the end of the season, but one man remained who had been on the work at its beginning. Mr. Winston observes that during the hot months the atmosphere is so tremulous that double the number of stations are necessary in any given distance than would be required in cooler weather.

Permanent bench-marks were established in all the towns and villages along the railroad, and several placed on the stone abutment of bridges, etc. In county towns the bench-mark was usually made on the court-house. Temporary bench-marks were established about one kilometre apart for comparison of results. No discrepancy between forward and backward measures was allowed to exceed five millimetres per kilometre without remeasurements.

Work was suspended at London, Pope County, Ark., on September 30, on account of the lack of funds for its further prosecution.

After the close of the season, copies of the descriptions of the bench-marks and lists of their elevations were furnished to Professor Branner, by direction of the Superintendent.

Mr. Winston commends specially the services rendered by Subassistant Welker. Mr. F. A. Young served faithfully as recorder.

The statistics are:

Geodetic leveling:

| | |
|---|---|
| Number of permanent bench-marks established | 20 |
| Number of temporary bench-marks established | 116 |
| Elevations determined, number of | 136 |
| Lines of geodetic leveling, length of, in kilometres | 135 |

Under a heading in Section XIV, mention is made of work of precise leveling carried by Mr. Winston from near Cairo, Ill., to the southward.

*Occupation of a station in Louisiana for magnetic observations.*—A determination of the magnetic elements at a station in Louisiana was included in the instructions issued to Assistant James B. Baylor in 1888. The station selected, Shreveport, Caddo County, had been occupied for magnetic observations in 1872, but the position then used having been destroyed, a new station was established in the court-house grounds, near the corner of Milan and Marshall streets. The magnetic

declination, dip, and intensity were determined on two days, and the true north ascertained by observations of the sun on one day.

This station was securely marked, as were the others occupied during the season, first by burying a bottle filled with coal-dust a foot and a half in the ground, and then by placing over this, as a surface mark, a substantial post with copper tack on top.

Shreveport was the last station occupied by Mr. Baylor for magnetic purposes in 1888. On December 27 he closed field work and proceeded north under instructions, taking up at his home the preparation of his records and computations for transmission to the office.

Other stations which he occupied between June and December are referred to under headings in Sections IX, XIII, XIV, XV, and XVI.

*Triangulation of the Atchafalaya River, Louisiana.*—Assistant C. H. Boyd, to whom had been assigned the triangulation of the Atchafalaya River, Louisiana, reached the locality of his work January 12, 1889, and after supervising some necessary repairs to the steamer *Hitchcock*, organized his party on board of her and began field operations January 21.

His first work was the selection of a base line, which was found on the west bank of the Atchafalaya River upon a narrow strip of land in front of the Cypress Swamp. The triangulation was then taken up from the line Cypress-Big Wax of 1888, and brought down to the base by cutting heavy lines through the swamps, and then narrowed as much as possible to the more open lands bordering the river as it was carried toward Morgan City.

Before the measurement of the base was undertaken its ends were securely marked with heavy limestone monuments, set in beton blocks, and time was given to the whole mass to settle. The line was then measured twice.

Observations of horizontal angles were carried on until March 14, when the vessel and party as organized were transferred to Assistant Perkins, instructions to that effect having been duly received.

Mr. E. L. Taney, Subassistant, and Mr. C. H. Stone, recorders, were attached to Mr. Boyd's party and were transferred to that of Mr. Perkins, who had, in accordance with previous understanding, made preparations to execute same work of verification on the coast of Louisiana.

Mr. Boyd reports the following statistics of his survey:

| | |
|---|---|
| Reconnaissance: | |
| Area of, in square statute miles | 10 |
| Lines of intervisibility determined as per sketch submitted | 26 |
| Number of points selected for scheme | 10 |
| Base lines: | |
| Secondary, length of, in metres | 1,890 |
| Triangulation: | |
| Area, in square statute miles | 10 |
| Signal poles erected, number of | 2 |
| Observing tripods and scaffolds built | 8 |
| Observing tripods and scaffolds, heights of, feet | 15 to 43 |
| Days occupied in opening and verifying lines of sight | 15 |
| Stations occupied for horizontal measures, number of | 7 |
| Geographical positions determined | 12 |

Service assigned to Mr. Boyd earlier in the fiscal year is reported under a heading in Section I.

*Measurement of base and verification of triangulation on the coast of Louisiana.*—An astronomical latitude and azimuth and a base of verification being required on the Gulf coast of Louisiana between the bases measured in previous years at Grande Isle, Barataria Bay Entrance, and at Blue Buck Ridge, Sabine Pass, Assistant F. W. Perkins was instructed to hold himself in readiness to take charge of the field operations necessary at such time during the spring of 1889 as might be deemed most expedient.

Accordingly, in March of that year, after having suspended for the season further work on the triangulation in Alabama, he proceeded to Morgan City, La., and took charge of the steamer *Hitchcock*, which was transferred to him by Assistant Boyd, as stated under the preceding heading.

Arriving off the southwest entrance to Vermilion Bay on March 21, a careful search next day for the triangulation station at Light-House Point developed the fact that the shores had been washed away for some fifty metres, and that the marks had been entirely destroyed. An examination of the coast to the westward showed many great changes in the shore line, and that no two consecutive points in the old scheme of triangulation remained. But very satisfactory ground for a base line and astronomical station was selected at the eastern extremity of Cheniere Tigre, about midway between stations "Oil" and "Lost," which had been found to be undisturbed.

Work of erecting signals, setting the heavy blocks for the latitude and azimuth piers, building an observatory, and preparing the base line was begun at once. The ground was as favorable for measurement as any available in that section, a hard marsh extending from high water some five hundred or a thousand metres inland, gradually becoming softer as it recedes, but covered near the water's edge by a deposit of finely broken shells, several feet in thickness, and varying from fifty to seventy-five metres in width. This offered a good support for the trestles, with but little grading.

The measurement and remeasurement of the line, a mile and a quarter in length, was completed April 6, in a little less than three days. Iron screw piles, five feet in length, put down even with the surface of the marsh, plumbed and well tamped, afforded secure markings for the ends of the base.

The astronomical station having been established at West Base, Mr. Walter B. Fairfield, extra observer, was directed to proceed with the observations for time, latitude, and azimuth, while the rest of the party continued the erection of signals for the triangulation.

Time was obtained by observations of double altitudes of the sun, made with a Gambey sextant and artificial horizon. Eleven pairs of stars arranged in two lists of seven and nine pairs, respectively, were observed for latitude with zenith telescope No. 5 on not less than six nights. Thirty-five sets of twelve pointings each were taken for azimuth on Polaris near culmination, the instruments used being twelve-inch Gambey No. 16 and an artificial horizon.

As soon as a sufficient number of signals had been erected, observations were begun for the trigonometrical connection of the base and astronomical station with the old scheme of triangulation both on the coast and in Vermilion Bay, and a measurement was made of a portion of the temporary base line of 1885, which showed that the one hundred metre wire used in that base was some eighteen centimetres too short.

On the 22d of May, all of the observations having been completed, the party proceeded to Morgan City, where it was disbanded, and the steamer laid up. Mr. C. H. Stone was attached to the party as recorder.

Mr. Perkins has submitted special reports upon the base measurement, trigonometrical connection, astronomical work, and the verification of the base of 1885, the special report on astronomical work having been prepared by Mr. Walter B. Fairfield.

Following are the statistics of the season:

| | |
|---|---|
| Reconnaissance: | |
| Area of, in square statute miles | 80 |
| Lines of intervisibility determined as per sketch | 20 |
| Number of points selected for scheme | 5 |
| Base line, secondary, length of, in metres | 2,040 |
| Triangulation: | |
| Area of, in square statute miles | 60 |
| Signal poles erected | 10 |
| Observing tripods and scaffolds built | 3 |
| Days occupied in opening and verifying lines of sight | 7 |
| Geographical positions, number of | 10 |
| Latitude and azimuth work: | |
| Pairs of stars observed for latitude | 11 |
| Average number of observations on a pair | 7½ |
| Number of nights of observations for azimuth | 6 |

Duty executed by Mr. Perkins in Alabama is referred to under a previous heading in this section, and geodetic operations carried on by him in Pennsylvania are reported under a heading in Section 11.

*Hydrographic surveys in Atchafalaya Bay and vicinity, coast of Louisiana.*—Early in January, 1889, Ensign L. M. Garrett, U. S. N., Assistant Coast and Geodetic Survey, having taken command of the steamer *Endeavor*, left New York with his party on board that vessel for the Gulf coast, under instructions to make off-shore and in-shore hydrographic resurveys in Atchafalaya Bay and vicinity.

Upon arriving in Atchafalaya Bay, February 4, search was immediately begun in the vicinity of Southwest Reef Light-house and to the westward for the recovery of stations of the former triangulation, but with little success. Of those located in 1855–56, many were on outlying oyster reefs, and all surface marks had entirely disappeared. The two stations recovered, however, in connection with Southwest Reef Light-house, were made available for beginning the hydrography; a tide-gauge was put up at the Light-house, and on February 13 soundings were begun.

Ensign Garrett states that in running the off-shore lines to the six and ten fathom curves, twenty miles and over from the limit of visibility of the signals, it was deemed best, where the currents were not strong, instead of anchoring occasionally to observe currents and correct the course, to steam out to the required depth of water and back to position angles as quickly as possible, thus saving considerable time. This method was followed with fairly good results throughout the season.

Foggy and smoky weather prevailed all through February, and until the last week of March, the smoke caused by burning marsh grass causing serious delay and inconvenience.

The tides were observed at Southwest Reef Light-house at intervals of fifteen minutes, night and day, for a lunar month. This gauge was used for the reduction of soundings till May 1, when a gauge of comparison was set up at Ship Shoal Light-house, and simultaneous observations taken at both gauges till May 31. Day and night tidal records were kept at Ship Shoal from June 7 to June 22, and the mean range determined to be 1.65 feet. At Southwest Reef Light-house the near range was found to be 1.2 feet. The tides were apparently quite irregular, and largely dependent upon the wind.

Ensign Garrett reports that, by taking advantage of spring tides and southerly winds, he succeeded in sounding over a portion of an area eight or ten miles square in the region north and west of Raccoon Point, Isle Dernière, which has from five to seven feet of water on it, but he recommends the use of a steam-launch as the most economical and effective means of getting a complete survey.

Ship Shoal was approached towards the end of the season, and a regular system of lines, one mile apart, carried across the shoal to the six and ten fathom curves. These lines Ensign Garrett deemed sufficient to determine whether the changes in the shoal were such as to make a thorough resurvey desirable.

On June 22, hydrographic operations were closed, and the *Endeavor* proceeded to New York, arriving there July 8. Ensign J. F. Luby and G. R. Evans, U. S. N., were attached to the party on the *Endeavor*.

For the season the statistics are:

| | |
|---|---|
| Hydrography: | |
| Area sounded, in square geographical miles | 1,200 |
| Number of miles (geographical) run while sounding | 2,277 |
| Number of angles measured | 4,920 |
| Number of soundings | 7,209 |
| Number of specimens of bottom preserved | 26 |

## SECTION IX.

TEXAS, INCLUDING GULF COAST, PORTS AND RIVERS; ALSO THE INDIAN TERRITORY. (SKETCHES Nos. 1, 6, 17, and 18.)

*Determinations of the magnetic elements at stations in Texas and at a station in the Indian Territory.*—The plan of magnetic work, with the execution of which Assistant James B. Baylor was charged at the beginning of the fiscal year, involved the occupation of seven stations in Texas for the determination of the magnetic elements.

At El Paso, the station of 1878 at Fort Bliss was no longer available and the station of 1884 had been built upon, hence a new station had to be selected, and it was established on the United States Reservation near the corner of Missouri and Oregon streets. The magnetic declination, dip, and intensity and the line of the true meridian were determined here by observations made December 1, 2, and 3, 1888.

At Sierra Blanco, El Paso County, a station was established on the open plain north of the Depot Hotel, and similar observations were made December 5 and 6.

At Pecos, Reeves County, a station was established in the northwest corner of the new court-house grounds, and the magnetic elements and true north determined by observations made December 7 and 8.

At Colorado, the county seat of Mitchell County, Tex., a station was established in the southwest corner of the new court-house grounds. Two days were occupied here in determining the magnetic declination, dip, and intensity, and the line of the true north.

On December 12, Mr. Baylor proceeded to Cisco, Eastland County, selected a station there in an open lot west of the Wilson Hotel, and observed during two days for the determination of the magnetic elements and line of true north.

The next station, at Fort Worth, Tex., was occupied December 16, 17, and 18. The point at which Mr. Baylor had observed in 1878 could not be reoccupied on account of some obstructions, so that a new station was selected.

At Mineola, Wood County, a station was established in the open lot south of the new Depot Hotel, and the magnetic elements and the true meridian determined on December 20 and 21.

In all cases the line of the true north was found by observations for azimuth on the sun, and the stations were securely marked as already described under a heading in Section VIII.

For reference to other magnetic stations occupied by Mr. Baylor, see Sections XIII, XIV, XV, and XVI.

Immediately after occupying a station at Emporia, Kans., reference to which is made under a heading in Section XV, Mr. Baylor proceeded to Vinita, Ind. T., and during three days reoccupied (within a few feet) the station of 1877, devoting two days to observation of the magnetic elements and one day to determining the line of true north.

*Construction of buildings for a self-registering magnetic station at San Antonio, Tex.*—The term of years during which it was deemed desirable to keep up the magnetic record with the Adie magnetographs at Los Angeles, Cal., having been nearly completed in 1888, Subassistant Isaac Winston was instructed towards the close of that year to proceed to San Antonio, Tex., to select in that city a site for a magnetic observatory, and, upon the approval of his selection, to proceed with the construction of the needful buildings.

Mr. Winston reached San Antonio January 17, 1889, and immediately began an examination for a site which would fulfill the conditions imposed in a memorandum prepared by Assistant Schott. The only location he found available for the purpose was in the United States Military Reservation, and this selection having been approved, and permission secured from General D. S. Stanley, U. S. Army, commanding the Department of Texas, to place the observatory in the grounds of the Reservation, the construction of the buildings was begun with as little delay as practicable.

In their erection the ground plan, which had been furnished by Assistant Lawson, and the elevation, supplied by Assistant Halter, were followed, some slight details of construction excepted.

To get a good foundation for the instrument piers in the main building, an excavation was made through clay and gravel to a depth of about seven feet before clay free from gravel was reached. About five feet of concrete was then put in, and the brick piers were built on this concrete. On the walls and ceiling of the inner building, rawhide builders' paper, water-proof, was tacked before nailing on the plank, and the walls for the outer building were filled with hay, well packed in.

The work of digging for the foundation was begun on January 31, and on February 27, by permission of General Stanley, and in accordance with instructions, the building was turned over in complete order to the care of Capt. E. B. Atwood, Assistant Quartermaster, U. S. Army, on duty as Depot Quartermaster.

Mr. Winston has submitted with his report a map of the city of San Antonio and a plan of the military reservation, showing the location of the observatory.

He acknowledges the kindness and courtesy of General Stanley in extending to him every assistance in his power to aid in the completion of the work. The buildings were promptly and faithfully erected by Mr. T. W. Carrico, a prominent builder of San Antonio, under Mr. Winston's personal supervision.

Near the end of February he proceeded to Washington, under instructions, and reported for duty in the office. Field service executed by him earlier in the fiscal year is referred to under headings in Sections VIII and XIV.

## SECTION X.

CALIFORNIA, INCLUDING THE COAST, BAYS, HARBORS, AND RIVERS. (SKETCHES Nos. 2, 9, 10, 11, 16, 17, and 18.)

*Hydrographic surveys on the coast of California from San Diego to Oceanside and vicinity.*—Upon suspending hydrographic operations in the vicinity of Crescent City, Cal., as stated under a subsequent heading in this section, Lieut. H. B. Mansfield, U. S. N., Assistant Coast and Geodetic Survey, proceeded in the steamer *Hassler* under his command to San Diego, under instructions to make hydrographic surveys in that vicinity and off the coast to the northward. He arrived at San Diego October 18, and began work on the 22d, carrying it on whenever the weather permitted until March 6, 1889, when hydrographic operations were closed off this part of the coast for the season. At that date three projections, scale 1–20000, had been finished, including the in-shore and off-shore hydrography from the Boundary Line (Initial Point) to beyond Oceanside.

With regard to the locality of his survey, Lieutenant Mansfield observes that the beach from the Mexican line to Point Loma (San Diego Entrance) is low and sandy. From False Bay to the limits of work, the coast line consists of eroded bluffs and frequent cañons ending in a smooth sand beach, except where the mountain spurs approach the shore, where it ends in a reef of small extent with bowlders and shingle on the shore.

This beach line is exposed to the full force of the heavy southwest swell in winter, and it is seldom practicable at that season to make a boat landing without exposing the boat and crew to great danger. Fortunately, however, for the progress of the hydrographic work, the railroad skirts the bluffs, so that Lieutenant Mansfield was able to send his signal lumber and working parties directly to the ground at a cost less than the price of coal that would have been burned while attempting a landing, and at times when the *Hassler* was weatherbound in the harbor of San Diego.

From the Mexican line, Lieutenant Mansfield found it safe to approach the coast within three-eighths of a mile, except off Tia Juana Lagoon, where the boundary line comes down to the sea. Northward of the entrance the five fathom curve runs out nearly a mile, and in heavy southwest weather it breaks a mile off-shore. The tidal currents set strongly in and out of this lagoon. The bar is very shoal, and always breaks. South of the kelp patch off Point Loma, the ten-fathom curve runs about two miles off-shore; the twenty-fathom curve about four miles. The bottom to ten fathoms is hard, fine, gray sand, growing coarser and containing black specks as the water deepens, with occasional patches of coarse yellow sand or gravel with black specks. The anchorage is good in fine weather, anywhere between the twenty-fathom and the eight-fathom curves.

Similar details respecting curves of depth and character of bottom are given by Lieutenant Mansfield for the rest of the area under survey. One fact of special interest may here be noted—

the discovery off La Jolla of the mouth of a submarine cañon. At the head of this cañon the water is very smooth, and a boat landing can be made safely in almost any weather.

At the close of the season Lieutenant Mansfield was detached from the *Hassler* and ordered to the command of the *Patterson*, Lieut. D. Delehanty having been ordered as his relief aboard the *Hassler*. The officers attached to the *Hassler* were Lieut. George M. Stoney, U. S. N., part of the season, and until relieved by Lieut. D. H. Mahan, U. S. N.; Ensigns Guy W. Brown, J. P. McGuinness, W. L. Dodd, and W. H. Foust, U. S. N.; Passed Assistant Surgeon N. H. Drake, U. S. N., and Passed Assistant Engineer G. D. Strickland, U. S. N. Lieutenant Mansfield makes special acknowledgment of ready and active co-operation rendered by these officers.

The statistics of work in San Diego Harbor and off the coast to the northward are:

| | |
|---|---|
| Number of miles run in sounding | 618 |
| Number of angles measured | 2,827 |
| Number of soundings | 6,218 |

Under subsequent headings in this section reference is made to hydrography executed by Lieutenant Mansfield in San Francisco Harbor and in the vicinity of Crescent City, and under a heading in Section XII appears an abstract of his report of work in Alaska while in command of the *Patterson* in 1889.

*Extension of the topographical survey of the south coast of California from Del Mar to beyond Oceanside.*—At the beginning of the fiscal year the party of Assistant A. F. Rodgers had been in the field since May 1, engaged in a topographical survey on the south coast of California, which had been commenced six miles north of Oceanside, San Diego County.

During the season the topography was carried twenty-four miles along the coast and from two to two and a half miles inland, and on the south reached Del Mar, at which place, in accordance with instructions, field operations were closed November 27, 1888.

This part of the coast is generally bordered by bluffs from ten to one hundred feet in height, inside of which are flat mesas or table-lands, sloping gently toward the ocean, having soil of remarkable fertility, as is shown wherever intelligent labor is employed in developing its resources. The problem of a supply of water for drinking and for purposes of irrigation is the controlling one, and the necessity of immediate expenditure to obtain it deters rapid settlement. Mr. Rodgers observes that nature has provided an abundant interior rain-fall and convenient sites for storage reservoirs in the deep cañons of the foot-hills. The average rain-fall of San Diego County coast is about twelve inches, but the high summits of the interior have a much larger precipitation; thirty to forty inches is claimed; this fall is upon abrupt mountain slopes at elevations of from two thousand to five thousand feet above sea-level, and reaches the ocean in denuding freshets, without effect other than damage to the valleys through which they pass.

Enterprises looking to the utilization of this waste water by storage reservoirs have already been inaugurated.

Beginning at San Mateo Point and going southward there are seven streams which may be noted as available for water storage—the San Mateo, the San Onofre, Las Flores, La Margarita, the San Luis Rey, San Diego River (so called), and the Sweetwater. These streams, insignificant in the months of summer, are often raging torrents in winter. Two of these streams are now being developed in the interest of settlement. A company has been formed to utilize the waters of the San Luis Rey water-shed. The valley through which this stream finds its way to the ocean is notable as the site of one of the principal missions founded by the Franciscan monks in 1776. The old church building with its dependencies, which took twenty years or more to complete, is now little more than a majestic ruin. Its site is three miles inland from the present town of Oceanside.

A similar, but more matured, enterprise has secured a reservoir site in the Sweetwater Valley two hundred and thirty feet above sea-level and fifteen miles southeast of the city of San Diego, and has built a masonry dam ninety feet in height.

Independently of these resources, which requires organized capital to develop, there are few localities in the country where attempts to get water from artesian wells have failed.

Mr. Rodgers remarks that the climate is one of remarkable excellence. Ice is rarely seen upon the shores of San Diego Bay in winter, and the summer temperatures are never excessive and rarely uncomfortable, when protection can be had from the direct rays of the sun.

Travel from Los Angeles to San Diego has been greatly facilitated by the new coast railroad between the two places, which are now but four hours distant in time. It is not now uncommon to see heavy freight trains loaded with lumber and coal on the way from San Diego to Los Angeles, and that, too, in the summer months, when the anchorage at San Pedro, the port of Los Angeles, is deemed safe.

Mr. Rodgers's report includes details of interest with regard to the great variety and fine quality of fruits grown in the county.

In closing his report he acknowledges the efficient services of Subassistant John E. McGrath, who reported for duty on the 20th of June, and who was relieved from further connection with the south-coast work after the return of the party to San Francisco in order to prepare himself for service in Alaska.

The results of the season are shown upon three completed plane-table sheets and upon part of a fourth, all upon a scale of 1-10000. The statistics are:

Topography:

| | |
|---|---|
| Area surveyed, in square statute miles | 58 |
| Length of general coast line, in statute miles | 31 |
| Length of shore line of creeks, in statute miles | 39 |
| Length of wagon roads, in statute miles | 69 |
| Length of railroads, in statute miles | 38 |

The two sheets to the north, yet to be finished, include some high and very rough country within their limits, the ridges, spurs, and outlying peaks of the San Onofre Mountain, and other topography of this character, where precise contours will hardly be practicable.

After his arrival in San Francisco, and from December until May following, Mr. Rodgers was engaged at the suboffice in making tracings from his uninked topographical sheets, these tracings, as a measure of security, being forwarded to Washington, pending the completion of the inking of the originals. These originals were then inked and forwarded, accompanied by full descriptive reports for deposit in the archives.

During the absence of Assistant Davidson, while he was making the measurement of the Los Angeles Base, and during the illness of Assistant Sengteller, who had been left in charge of the suboffice, Mr. Rodgers performed such general duties as the business of the suboffice required.

Under instructions dated April 20, 1889, he made preparations to resume the survey in the vicinity of Del Mar, from the limits of work of the preceding season, and having forwarded his instruments and field outfit he left San Francisco May 20, and upon reaching Del Mar, May 23, began field operations.

Mr. Rodgers has submitted a report of his work to the close of the fiscal year, at which date it was in active progress.

He observes that in view of the probable future of the area covered by his survey, its special inducements to populous settlement when its marked features of climate and soil are understood, and its really great resources properly estimated, he did not feel at liberty to do less than make such a close survey as would be of value for special reference, even though it might involve a greater expenditure of time than would ordinarily be bestowed on unsettled areas.

Mr. John Nelson, Aid, was instructed to join the party upon its organization, and rendered efficient service.

Statistics of the work for the season will appear in the next annual report.

*Hydrographic survey on the coast of California from off the eastern end of San Onofre Mountain to Newport Landing, and hydrographic examination for a shoal reported off Point Fermin.*—The command of the steamer *Hassler* and the charge of the hydrographic party organized on board of her having been assigned to Lieut. Daniel Delehanty, U. S. N., Assistant Coast and Geodetic Survey, he was instructed in March, 1889, to make a hydrographic survey off that portion of the Cali-

fornia coast extending from the eastern end of Onofre Mountains to Newport Landing, and to examine the location of a shoal reported as lying off Point Fermin.

Lieutenant Delehanty began work on his projections March 28, and being favored by fine weather (the fogs occurring mostly at night), he finished the hydrography between San Onofre and Newport Landing on the 9th of April. Tidal observations were made during its progress at Santa Ana River and at Newport Landing.

Details are given in the report relating to the distances from the shore of the five, ten, twenty, and one hundred fathom curves.

Upon his arrival at San Pedro, April 10, Lieutenant Delehanty collected the evidence respecting the existence of the shoal reported off Point Fermin, and upon which the depths were variously reported, some fishermen giving them as between seven and fourteen fathoms, others stating that there was not less than ten fathoms. The result of a careful examination made by Lieutenant Delehanty as that his soundings clearly indicated the existence of a small ridge, a mile and a quarter long and a quarter of a mile wide, with from ten to twelve fathoms of water on it, the ridge beginning four miles east by south (magnetic) from Point Fermin Light and extending southeast by east one-half east (magnetic). As it never breaks in this vicinity, it is not probable that there is a less depth than that developed by the soundings.

For the two hydrographic surveys, the statistics are:

| | |
|---|---|
| Miles run in sounding | 252 |
| Angles measured | 1,336 |
| Number of soundings | 3,324 |

Towards the end of the fiscal year Lieutenant Delehanty took up, under instructions, the continuation of the hydrography off Crescent City, Cal.

*Measurement of the Los Angeles primary base.*—Reference was made in the Annual Report for 1886 to the reconnaissance for the site of a primary base line on Los Angeles plains by Assistant J. S. Lawson and E. F. Dickins under the general direction of Assistant George Davidson, and to the selection of two sites, the final location being subject to Mr. Davidson's decision.

Under instructions dated early in October, 1888, Mr. Davidson began preparations for the measurement of the line, the general location of which he had decided upon after an examination of the reports submitted by Messrs. Lawson and Dickins. His party, as organized to aid him in the measurement, consisted of Assistant Lawson, Subassistant Fremont Morse, Aid John Nelson, Ferdinand Westdahl, draughtsman, and Frank W. Edmonds, recorder.

Upon reaching camp, October 25, Mr. Davidson examined the general locality of each end of the base. The temporary marks had been destroyed, and a new selection was found desirable, differing in length nearly two hundred meters from the old line.

The general direction of the base line as finally determined upon was north thirty-six degrees west, and its length, as measured by an hundred-metre wire, was found to be 17,494.5 metres; by the measurements with the base apparatus, 17,496 metres; both of these lengths being uncorrected, are approxmate only. The line passes over a generally plain section of very varied soil, crosses several lines of drainage, several broad shallow basins that hold water over the adobe soil, the deep cuts alongside the Southern Pacific Railroad and the railroad itself, the road-bed of the Santa Fé Railroad, the broad alkali plains on each side of that road, and finally the slight ridge at the Northwest Base. The line is partly in Los Angeles County and partly in Orange County, a new county lately established in the south and east part of Los Angeles.

As in the case of the Yolo Base, no attempt was made to grade the line, except in half a dozen places where sand or clay hummocks were cut through. The work of clearing the line from the tussocks and coarse grasses was assigned to Messrs. Morse and Welker; the work of building all the trestle-work for crossing the water-ways and the approaches to the Southern Pacific Railroad was assigned to Mr. Westdahl. Mr. Morse built all the brick piers for comparison of the working bars with the field standard at Southeast Base, at the camp, and at Northeast Base. The general direction of the party was assigned to Mr. Lawson, with charge over the crossing of water ways, bridges, etc.

The base was aligned by Messrs. Davidson and Morse, two-inch aligning poles being placed, about every half mile or more, according to circumstances.

Messrs. Nelson and Westdahl made the wire measurement of the base, and established one hundred metre stakes which were to check the bar measurement against the possibility of not reading a bar, and also as turning points for the leveling, which was done with a Y-level by Mr. Nelson.

Preparatory to the actual measurement, a series of hourly comparisons of the base bars and field standard were made at camp, extending through the day and night to follow the law of outstanding want of compensation, and as data for any absolutely necessary reduction. These comparison observations showed at once that Bar No. 1 had changed its length in traveling since the seventy-two hours comparisons were made at San Francisco. After the camp comparisons, the bars and apparatus were taken to Southeast Base, and an hourly series of comparisons was made extending through two days and one night.

Immediately after these comparisons the measurement of the base was begun. Progress was slow at first, the officers (except Mr. Davidson) being all new to the work with a primary apparatus, and the men all new except four. The weather was also very adverse; on December 19 a heavy storm set in, which compelled a suspension of the measurement for six and a half days.

Mr. Davidson's experience with the apparatus, the same he had used in measuring the Yolo Base, determined him to make three measurements of the line. It happened fortunately for the work that a continued season of favorable weather set in after Christmas, and but three and a half days work was lost (by rain and wind) until the work was done, near the end of February.

The first measurement, starting from Southeast Base, was made in twenty-one working days; the second, beginning at Northwest Base, in fourteen working days, and the third, starting from Southeast Base, in eleven and three-fourths working days. In this last measurement the whole sixteen persons engaged had acquired precision in handling the apparatus, and were thorougly in accord in movement and emulation. Measurements were made of one hundred bars in ninety-six and one-eighth minutes; one hundred bars in one hundred and four minutes, and one hundred bars in one hundred and one minutes. The only opportunity available for a test of the character of the measurements was in three measurements of the northern half-kilometre; the field computation showed that all three were inside one sixteenth of an inch.

Mr. Davidson has submitted a full report of the measurement, giving details in regard to the apparatus, the methods adopted in the work, the comparison of base bars with the standard, tabular statements of progress during each measurement, and statistics of the three measurements.

This report, accompanied by an illustration showing the plan of marking the ends of the base, by a sketch-map showing the general location of the line and its direct connection with the main triangulation, and by a map showing the profile of the line and its location as measured, is published as Appendix No. 10 to this volume. A tracing, showing the topography of the line as surveyed in June, 1886, has been filed in the office at Washington.

Mr. Davidson commends all of the members of his party for their thorough co-operation in the work, and observes that where all did well, it might seem almost invidious to mention Mr. Morse for his unceasing and intelligent labors, and Mr. Westdahl for his difficult work of setting the tripods.

The general supervision of the land parties on the Pacific coast, and other duty assigned to Mr. Davidson, is adverted to under a subsequent heading in this section.

*Magnetic record continued, and absolute values of the magnetic elements determined monthly at the self-registering magnetic station at Los Angeles, Cal.*—Assistant R. E. Halter, who has been continued in charge of the magnetic station at Los Angeles, has submitted a report of his work during the fiscal year. The photographic records of the unifilar and vertical force Adie magnetographs were kept up continuously, and also the bifilar record, with the exception of one day when the cylinder was not properly geared. Absolute determinations of the magnetic declination, dip and intensity were made on the 14th, 15th, and 16th of each month. Time was determined on or near the first of every month.

On December 20 the usual semi-yearly observations for instrumental scale values were made with satisfactory results.

Mr. Halter reports that the photographic traces have all developed very well, there being not a single indistinct trace during the entire year.

The records, tabulations, computations, and duplicates were kept up promptly and sent to the Office every month. In the routine work and with the records Mr. Halter had the aid of Mr. W. P. Miles.

Following are the statistics for the fiscal year:

| | |
|---|---|
| Number of observations made for time | 288 |
| Number of observations made for temperature | 4,608 |
| Number of eye observations of scale readings | 2,190 |
| Number of unifilar hourly scale readings taken from the traces | 8,760 |
| Number of bifilar hourly scale readings taken from the traces | 8,736 |
| Number of vertical force hourly scale readings taken from the traces | 8,760 |
| Number of observations for absolute declination | 1,392 |
| Number of observations for absolute dip | 3,456 |
| Number of observations for absolute intensity | 1,080 |
| Number of observations for absolute scale values | 372 |

A continuous record, with scarcely any interruptions, of the variations of the magnetic elements, and also monthly determinations of their absolute values having been obtained at this station since October, 1882, arrangements are now in progress for the transfer of the observer and the apparatus to a station in San Antonio, Tex.

*Tertiary triangulation and topography on the coast of California, from Cape San Martin westward.*—In compliance with instructions issued in April, 1888, Assistant Stehman Forney organized his party for the resumption of the tertiary triangulation and topography from Cape San Martin westward. An abstract from Mr. Forney's report of the progress of this work to June 30, 1888, was given in the last Annual Report. Upon its close, December 11 of that year, he had completed the triangulation to Mansfield Cone, near latitude 35° 57′ north, and longitude 121° 29′ west, and he had connected it with the primary triangulation stations Santa Lucia, Rocky Butte, and Cone Peak. The lines to Cone Peak and Santa Lucia are from concluded angles, and these peaks should be occupied to make the connections perfect with the tertiary work.

The topography was completed to Prewett Creek, in latitude (about) 35° 56′ north and longitude 121° 28′.6 west.

In this survey the general topographical features are represented by contour curves showing every hundred feet difference of elevation, and extending to the summitt of the Coast Range. This range is at an average distance of four miles from the sea, and rises to an average height of thirty-four hundred feet.

After completing this work, Mr. Forney was instructed to proceed to Washington and take up at the office the inking of his topographical sheets. He acknowledges valuable service rendered in the field by Mr. John Nelson, aid in his party.

Following are the statistics of the season:

| | |
|---|---|
| Triangulation: | |
| Area of, in square statute miles | 105 |
| Signal poles erected, number of | 26 |
| Stations occupied for horizontal measures | 20 |
| Geographical positions determined | 42 |
| Topography: | |
| Area surveyed, in square statute miles | 40 |
| Length of general coast-line, in statute miles | 10 |
| Length of shore line in creeks, in statute miles | 64 |
| Length of roads, in statute miles | 5 |

The scale of the two topographical sheets finished was 1-10000.

*General charge of the land work upon the Pacific coast.—Establishment of a meridian line and a standard of length in Golden Gate Park, San Francisco.—Magnetic and tidal work, etc.*—The general charge of the land work upon the Pacific coast, the charge of the main triangulation and of the

several operations connected with it, the direction of work at the automatic tidal stations in California and in Alaska, and the charge of the Suboffice at San Francisco were continued with Assistant George Davidson.

Under a preceding heading in this section has been given an abstract of Mr. Davidson's report of the measurement of a primary base line on Los Angeles Plains, California, and the report in full is published as Appendix No. 10 to this volume.

During the measurement vertical angles were measured to the surrounding mountain peaks. After its close Mr. Davidson went by way of Santa Ana as far as Los Bolsas Ridge, to judge of its relation to the triangulation coming off the base. He examined also the Newport wharf, recently constructed, so as to have it placed upon the chart. This wharf was built upon the recommendation of the Survey in a locality at the head of a sub-marine valley, and has stood the storms of winter so well that a railroad is being graded thence to Santa Ana.

*One hundred metre meridian line.*—At the request of the Superintendent Mr. Davidson had a conference with the commissioners of the Golden Gate Park, San Francisco, upon the subject of establishing a short base line laid off in the true meridian in the Park. A verbal explanation was given of the advantages it would afford to the Survey, and also to State surveyors and to engineers in general. It was specially needed for the testing of the two steel wires intended to be used by the Alaska boundary survey parties.

With the authority of the commission, a base line of one hundred metres was laid off in the meridian, Mr. Davidson determining the direction by observations for azimuth of the signal upon Blue Mountain, and Mr. Morse laying down the line and planting granite blocks to mark it. The one hundred metres were measured with the primary base apparatus, Assistant Lawson, Subassistant Morse, and Messrs. Westdahl and Edmonds aiding in the work. The line was sub-marked from the north station by granite blocks having a surface area of ten by ten inches, a little over two feet long, and roughly averaging twelve inches square two inches below the top. The tops are about an inch above the general surface of the ground. Plates of brass with center marks were securely fastened on the top of each block. They were set at distances from the north station of fifty feet, sixty-six feet, one hundred feet, and fifty metres. Afterwards the north end of this base was connected with the triangulation by Mr. Morse.

*Alaska boundary parties.*—During the fitting out of the Alaska boundary parties, in charge of Subassistants McGrath and Turner, Mr. Davidson, in accordance with instructions, rendered them all the assistance which his experience could give in the matter of outfitting, examining instruments, conferences on methods. This he cheerfully did, and also placed his manuscripts at their disposal for copying, drilled them in making observations for the magnetic elements, and gave them the use of the observatory instruments and of a special pier for their practice work. At the request of the Superintendent, he wrote out his views upon the methods for inaugurating the Boundary Survey of Alaska from Portland Inlet to the one hundred and forty-first meridian under Mount St. Elias.

*Telegraphic longitude work.*—In the telegraphic longitude work of Assistant Sinclair and Marr, Mr. Davidson gave them the use of the observatory, and assisted them in whatever way they desired. During the special observations for the determination of the longitude of the Chabot Observatory at Oakland he made the observations at the latter station, and Messrs. Sinclair and Marr at the Lafayette Park Station. These observations were continued through six nights, and the observers made observations for personal equation.

*Magnetic work, San Francisco.*—In order to keep up the series of observations of the magnetic elements which he began at the Presidio Astronomical Station in 1852, Mr. Davidson directed Mr. Morse to observe another of the series in May, 1889. These observations had a special value, because the maximum declination which has been passed to the north and to the south of the Presidio has not yet reached that station. The indications are that within five years the maximum may be reached.

*Coast Pilot work.*—Mr. Davidson has continued the gathering of material for the fourth edition of the Pacific Coast Pilot since he sent on in 1888 the original mass of manuscript which embraced about two thousand five hundred pages and four hundred and fifty illustrations. He forwarded to the Office in 1888–'89 about four hundred and fifty more pages, which were largely additions of

new material, gathered from the topographical reconnaissances, reports of the Light-House Board, and special investigations. This work is now in course of publication.

*Charge of the Pacific coast work.*—In virtue of his assignment to the general charge of the land operations upon the Pacific coast, Mr. Davidson has submitted to the Superintendent general plans for the prosecution of that work, has made out detailed instructions to each chief of party, examined estimates and referred them to the Superintendent, conferred personally with chiefs of parties whenever practicable, and has received and transmitted all official correspondence between the Superintendent and the officers of the Survey upon the Pacific coast.

Reference will be made to other duty performed by Mr. Davidson in a subsequent heading in this section and in a heading under Section XII. His charge of the Sub-office will be noticed towards the close of this part of the annual report.

On the 28th of February, 1889, he was appointed by the President a delegate to attend the next meeting of the International Geodetic Association, pursuant to a joint resolution of the Congress approved February 5, 1889.

*Exchanges of telegraphic signals for longitude between San Francisco and Mount Hamilton, San Francisco and Sacramento, San Francisco and Point Arena, Point Arena and Sacramento, Sacramento and Marysville, Sacramento and Los Angeles, Los Angeles and San Francisco, Chabot Observatory at Oakland and San Francisco, Los Angeles and Needles, and Sacramento, California, and Verdi, Nevada.—Also determinations of latitude and the magnetic elements at Sacramento, Point Arena, Marysville, and Los Angeles.*—After the completion of the longitude determination, Helena (Mont.)—Spokane Falls (Wash.), at the end of September, 1888, the longitude parties in charge, respectively, of Assistant C. H. Sinclair and Subassistant R. A. Marr, were instructed to transfer their operations to San Francisco and vicinity. At San Francisco, the use of the Lafayette Park Observatory having been given for the longitude work by Assistant Davidson, that station was occupied by Mr. Sinclair.

Prof. E. S. Holden, director of the Lick Observatory, selected a site for the longitude station on Mount Hamilton, about fourteen hundred metres (nearly nine-tenths of a mile) east of the Observatory. Professor Holden aided materially in the preparations for longitude work, and directed his assistant, Professor Schoeberle, to determine the position of all the stars used both for longitude and latitude observations.

After much delay, owing to the condition of the telegraph line, which needed frequent repairs, signals for longitude were exchanged between Mr. Marr, at Mount Hamilton, and Mr. Sinclair, at San Francisco, on the nights of October 23, 30, 31, and November 1, 2, and 5, after which the observers changed places, and a second set of exchanges was obtained November 23, 24, 26, 27, and 28. While at Mount Hamilton Mr. Sinclair determined the latitude of the station by observations on twenty-nine pairs of stars on five nights, and Mr. Marr observed for the magnetic elements.

The next line taken up was San Francisco–Sacramento. Through the courtesy of the Hon. R. H. Waterman, governor of California, Mr. Sinclair obtained authority to establish a longitude station in the grounds of the State capitol at Sacramento. Cloudy and foggy weather prevailed from December 1 till the 17th, neither sun nor stars being visible.

With but one day's interruption this weather continued till the 27th. Exchanges of signals with Mr. Marr at San Francisco were obtained on the 18th, 27th, and 28th of December, 1888, and on January 4, 1889, after which Mr. Sinclair went to San Francisco and Mr. Marr to Sacramento, and in the new positions of the observers, exchanges were made January 6, 7, 11, and 12. At Sacramento magnetic determinations were made by Mr. Marr. He then proceeded to Point Arena, a locality of importance as the western termination of the arc of the thirty-ninth parallel. Having established a longitude station here, he began on January 16, an exchange of telegraphic signals with Mr. Sinclair at San Francisco. Other exchanges were obtained January 18, 19, 21, and 22. The observers having then changed places, a second set of exchanges, completing the determination, was made on the nights of January 25, 26, 27, 28, and 29. The final line in this longitude triangle was taken up, Sacramento–Point Arena, and, with Mr. Marr at Sacramento and Mr. Sinclair at Point Arena, exchanges were obtained January 31, February 2, 3, and 4, after which Mr. Marr went to Point Arena and Mr. Sinclair to Sacramento, and a second set of exchanges was made February 7, 8, 9, and 12.

While at Point Arena, Mr. Marr determined the magnetic declination, dip, and intensity.

The line Sacramento-Marysville was then taken up, Mr. Marr selecting and preparing for occupation the station at the latter point. This line was determined by exchanges of telegraphic signals for longitude February 26, 27, 28, March 1 and 2, after which, with Mr. Sinclair at Marysville and Mr. Marr at Sacramento, the second set of exchanges was made March 3, 4, 5, and 6.

The magnetic elements were determined by Mr. Marr at Marysville.

Mr. Sinclair then proceeded to Los Angeles to prepare a station for occupation in determining the lines Sacramento-Los Angeles and Los Angeles San Francisco. The first named line was determined by exchanges on the nights of March 18, 20, 21, and 22, and by a second set, after change of observers' places, on the nights of March 29, 30, and April 3 and 6, Mr. Sinclair being at the close of the work at Sacramento and Mr. Marr at Los Angeles, where he determined the magnetic elements. The next line was then taken up, Mr. Sinclair having proceeded to San Francisco, and exchanges being obtained with Mr. Marr at Los Angeles April 15, 16, 17, 18, and 19, and again, after change of places by the observers, April 27, May 2, 3, 9, and 13.

Advantage was taken by Assistant Davidson of the presence of the longitude party in San Francisco to determine the longitude of Chabot Observatory, at Oakland, Mr. Davidson occupying this station, and exchanging with Mr. Sinclair longitude signals on the nights of April 16, 17, and 18, and with Mr. Marr, April 27, 29, and May 3. He also observed for personal equation with these efficers.

The line Los Angeles-Needles was then taken up, and completed by two sets of exchanges of signals, the first set on May 22, 23, 24, June 1 and 5, and the second set with Mr. Sinclair at Needles and Mr. Marr at Los Angeles on June 7, 8, 12, 13, 15, and 16.

Mr. Marr selected the location for the station at Needles; Mr. Sinclair determined its latitude by observations on twenty-one pairs of stars on four nights.

The last determination made during the fiscal year, and finished a few days after its close, was that of the line Sacramento, Cal.-Verdi, Nev. Mr. Marr established the station at Verdi, and exchanged with Mr. Sinclair June 24, 25, 28, and 29. The line was completed by exchanges made between Mr. Sinclair at Verdi and Mr. Marr at Sacramento July 1, 2, 3, and 4, 1889. The position of the station at Verdi was referred to that of Mr. Davidson's triangulation and longitude station of 1872, thus checking the determination of the one hundred and twentieth meridian.

Further account of the progress of the longitude parties will be given in the next Annual Report. For other longitude determinations made by Messrs. Sinclair and Marr, see Sections XI, XVI, and XVII.

*Hydrographic examination of Hospital Cove, Angel Island, San Francisco Bay.*—In accordance with instructions dated October 16, 1888, issued in compliance with a request from the President of the Commission for locating a Quarantine Station in the Bay of San Francisco, Assistant Louis A. Sengteller conferred with Mr. John S. Hager, Collector of the Port, and also President of the Quarantine Commission, and having obtained from him the necessary facilities, which included the use of a steam-launch and the services of a recorder and leadsman, proceeded to make an examination of Hospital Cove, Angel Island, in order to determine its fitness for the station required by the Commission.

The United States steam revenue-launch *Hartley* was placed at Mr. Sengteller's disposal for three days, and the necessary signals were put up and soundings taken October 25, 26, 27, and November 1. Upon the completion of the examination, Mr. Sengteller reduced and plotted the work and furnished a tracing of his original sheet to Mr. Hager. The sheet itself with the records and his report he has since forwarded to the Office.

With regard to the suitability of Hospital Cove as a site for a Quarantine Station, Mr. Sengteller observes that the distance between the two outer points of the cove is about three hundred and seventy metres (one thousand two hundred and fourteen feet, nearly). After having passed the line of these two points shallow water is reached of irregular depths. The site would be very contracted for the construction of wharves, which would have to be located on the eastern shore of the cove, and much dredging would have to be done of a bottom apparently soft and muddy. The wharves, he thinks, could not accommodate over four large vessels at any one time. A serious disadvantage exists in the fact that there is no anchorage off the cove, the waters being deep, the

currents rapid, and the bottom generally rocky, but at Quarry Point, about a mile to the eastward, reasonably good anchorage may be found. The cove is well sheltered from all prevailing winds, and water can no doubt be obtained from the deep cañon which takes its start from the summit of Angel Island.

The statistics of this work are as follows:

| | |
|---|---|
| Number of stations occupied | 12 |
| Number of stations determined | 8 |
| Number of miles run in sounding | 8 |
| Number of angles measured | 176 |
| Number of soundings | 658 |

During the winter and spring Mr. Sengteller's health, which for some time had been impaired, failed rapidly, and on the 23d of May, 1889, he died. By this sad event the Survey lost an officer of tried fidelity, whose capacity as a topographer was shown by the superior character of all the work which he accomplished. He was appointed on the Survey in 1862, and had rendered valuable service in the field on both the Atlantic and Pacific coasts, and in the Office as chief of the Engraving Division.

*Continuation of tidal record at the automatic tidal station at Saucelito, Bay of San Francisco.*—The Saucelito automatic tide-gauge, under the general supervision of Assistant George Davidson and in immediate charge of Emmet Gray, observer, was continued in operation throughout the year. The records were of a high order of excellence. With the tabulations they are examined monthly by Mr. Davidson and then forwarded to the Office.

During the year some repairs were made to the pier to enable it to withstand the winter's storms. To detect any change that might possibly occur by the sinking of the piling, Mr. Davidson had levellings made two or three times during the year between the staff and the two bench marks.

The transit observations for error and rate of the tidal chronometer were made by Mr. Davidson and by Assistant McGrath and Sub-Assistan ts Morse and Turner.

*Hydrographic surveys in the vicinity of Crescent City, Cal.*—Hydrographic work in the vicinity of Crescent City, Cal., was begun by Lieut. H. B. Mansfield, U. S. N., Assistant Coast and Geodetic Survey, commanding the steamer *Hassler*, under instructions dated early in August, 1888. A tide-gauge was put up August 20, and the bench mark transferred to the new wharf.

On the 21st the fog, which had prevailed during most of the month, lifted, and Lieutenant Mansfield started down the coast on the trail to recover some of the triangulation points. But on his arrival at the Klamath River the fog shut in, and as it continued the next day he returned to Crescent City. With the exception of August 26, when it was clear for a few hours, the fog did not lift till the morning of the 30th. On that date sounding was begun in the gig and whale-boat, using rocks for signals. On August 31, a thick fog shut in, continuing until September 3, on which day, although hazy and misty, the gig and whale-boat attempted to fix in position some rocks as signals. September 4 a thick fog prevailed, lifting at last before a heavy northwest gale, and setting in again on the 7th, when the wind moderated. During this gale the new wharf and mooring buoys at Crescent City were located. The 14th and 15th were favorable for hydrographic work, and some progress was made, but on the night of the 15th the *Hassler* was compelled to put to sea, a heavy southwest swell making it dangerous for her to remain at the anchorage. On returning next day, instructions were received to suspend operations in the vicinity of Crescent City and take up a hydrographic survey at San Diego and to the northward.

The statistics reported by Lieutenant Mansfield are:

| | |
|---|---|
| Miles run in sounding | 24 |
| Number of soundings | 620 |

He states that the season was very late on the coast; the rains extending into July were succeeded by unusually dense and continuous fogs. June and July are usually the months of the least fog in this vicinity.

Lieutenant Mansfield having been relieved from the command of the *Hassler* after finishing his work in the vicinity of San Diego, his successor, Lieut. Daniel Delehanty, U. S. N.,

Assistant Coast and Geodetic Survey, was instructed in April, 1889, to take up and finish the Crescent City work.

Before this work could be begun the steamer had to be dry-docked at San Francisco. She reached Crescent City June 8, and next day hydrographic operations were begun. This survey was in progress at the close of the fiscal year, and will be referred to more fully in the next Annual Report.

The following named officers were attached to Lieutenant Delchanty's party: Lieut. C. A. Gove, U. S. N., executive officer; Ensigns Guy W. Brown, J. P. McGuinness, M. L. Dodd, and S. R. Hurlburt, U. S. N.

Following are the statistics up to June 30, 1889:

| | |
|---|---|
| Miles run in sounding | 235 |
| Angles measured | 508 |
| Number of soundings | 1,335 |

## SECTION XI.

OREGON AND WASHINGTON TERRITORY, INCLUDING COAST, INTERIOR PORTS AND RIVERS, SOUNDS AND BAYS. (SKETCHES Nos. 2, 11, 12, 17, and 18.)

*Topographical reconnaissance of the coast of Oregon between Rogue River and Cape Sebastian completed.—Topographical survey of the Oregon coast between Koos Bay and the Umpquah River finished.*—The progress of the topographical reconnaissance of the coast of Oregon, in charge of Assistant E. F. Dickins, up to the close of the fiscal year, was stated in the last Annual Report. At that date Mr. Dickins had reached the mouth of the Rogue River, traveling on horseback over a rough mountain trail, his camp outfit transported on pack animals. The rainy season had lasted this year a month later than usual, and the light shelter tents of the party afforded but little protection against the heavy rains, the ground being always damp at night. But by taking advantage of every favorable moment and working between showers, Cape Sebastian was reached and the reconnaissance completed to that point on the 16th of July, 1888.

After spending a few days at Port Orford to correct an error discovered by Mr. Dickins in Assistant Chase's reconnaissance of 1869, preparations were begun for taking up the work required to fill the gap in the topography between Koos Bay and the Umpquah River. Arriving at Empire City, July 23, the camp outfit was overhauled and packed and on August 1 the party and pack animals were ferried across Koos Bay. Camp was soon after pitched at Ten Mile Creek, and the topography begun, joining with the work of Assistant Sengteller just north of the creek. Most of his triangulation stations were lost, owing to the drifting and shifting of sand dunes; others had therefore to be determined as needed.

By September 1 the topography had been completed half down the beach; camp was then moved to the north shore of Koos Bay, and by October 18 the gap in topography between Koos Bay and Umpquah River was filled.

The rainy season having then begun, Mr. Dickins deemed it inexpedient to commence the survey of Koos Bay so late in the autumn; he accordingly stored his camp outfit at Empire City for the winter and returned to San Francisco.

Mr. Dickins will submit with his topographic sheets a descriptive report accompanied by sketches illustrating the details of topographical features.

A suggestion which he makes with regard to the location of a whistling buoy to warn the coast steamers of a dangerous sunken rock off Rogue River Reef will be reported to the Light-House Board. With regard to the channel between the reef and the main land, which the small coasting steamers sometimes use, Mr. Dickins observes that he does not deem it safe until a thorough hydrographic survey has been made, as he has seen the break of sunken rocks on either hand, and thinks that the reef may extend across the channel.

The statistics of the season will be included in those given for the fiscal year.

During the winter Mr. Dickins was employed in the suboffice at San Francisco, inking and tracing his topographic sheets and preparing descriptive reports. These, with the sheets, he has forwarded to the office.

In accordance with a telegram from the Superintendent, dated May 1, to Assistant Davidson, authorizing him to send Mr. Dickins to the field as soon as his allotment would allow, he was instructed to organize a party for the resurvey of Koos Bay. Arriving at Empire City, May 20, he recovered enough points of the old triangulation to proceed with the topography, which at the close of the fiscal year was being pushed ahead as rapidly as possible.

Mr. Ferdinand Westdahl joined the party June 14 and rendered valuable service.

The statistics for the fiscal year are as follows:

| | |
|---|---|
| Number of miles of shore-line surveyed | 48 |
| Number of miles of creeks and rivers | 25 |
| Number of miles of roads | 6 |
| Number of signals put up for triangulation | 34 |
| Area surveyed (approximate) in square miles | 47 |

The progress of Mr. Dickins's survey will be again adverted to in the next Annual Report.

*Hydrographic survey from Cape Orford and vicinity to the southward.*—The steamer *Gedney*, Lieut. J. M. Helm, U. S. N., Assistant Coast and Geodetic Survey, commanding, having been recalled from her work in Nantucket Sound and hurriedly fitted in New York for the Pacific coast, left that port November 13, 1888, and arrived in San Francisco, after a successful and uneventful trip, on the 20th of April following. She had been intended for service on the Alaska coast, but owing to lack of funds it became necessary to postpone her departure for that coast, and instructions were accordingly issued to Lieutenant Helm to take up a hydrographic survey from Cape Orford to Rogue River Reef.

Arriving at Port Orford May 28, he began the erection of signals, established a tide-gauge, and at the close of June was actively engaged in prosecuting the hydrography, having at that date nearly completed his first hydrographic sheet, scale 1–20000. Reference to the progress of this work will be made in the next Annual Report.

The officers attached to the *Gedney* were Ensigns R. O. Bitler, Joseph Strauss, W. H. G. Bullard, F. W. Jenkins, and M. L. Bristol, U. S. N.

For the season and up to June 30, 1889, the statistics reported by Lieutenant Helm are as follows:

Hydrography:

| | |
|---|---|
| Area covered in square geographical miles | 103 |
| Number of miles run in sounding | 414 |
| Number of angles measured | 2,558 |
| Number of soundings | 3,526 |

*Resurveys and examination of changes in the Columbia River, in the vicinity of Astoria, and between Tongue Point and Tansy Point.*—Instructions issued to Assistant Cleveland Rockwell towards the end of April, 1889, looked to a resurvey of the river channel near Astoria, Oregon, covering the river from Tongue Point to Tansy Point, and also the areas of Young's Bay and parts of Young's River, and of Lewis and Clarke River, together with an examination of the shore-lines of the vicinity, and a resurvey of the same wherever necessary. These resurveys and examinations had been called for by the Astoria Chamber of Commerce, and, at the request of Senator Dolph, had been authorized by the Superintendent. Assistant Davidson, in his special instructions for the work, had included in it the delineation of the contours and outline of the prairies on Scarborough Hill, and the fixing of the position and the general contours of Coxcomb Hill on the Astoria Peninsula, both of these hills being noted landmarks for the Columbia River entrance.

Upon further consideration of the scope of his special instructions, Mr. Rockwell decided to make a complete resurvey of the localities covered by them.

At the end of the fiscal year the work was so nearly completed that a few days more sufficed to finish it.

Mr. Rockwell organized his party in Portland, Oregon, April 22, and in order to obtain data for inserting on the charts of the river new wharves, canneries, and landings along the shores, not in existence at the time of the original surveys, he ran down the river in his boat, and added the improvements on the way. The first work of sounding was done May 13, the intervening time having been occupied in searching for the points of the former triangulation, erecting hydrographic signals and fixing their position with the plane table. A plane of reference for the soundings was obtained from the automatic gauge in charge of Mr. Louis Wilson, formerly tidal observer for the Coast and Geodetic Survey at Astoria. The tabulations of the gauge records were compared at frequent intervals with readings on the staff.

The hydrography was finished June 25, and by the 10th of July the topography around the shores of Young's Bay and Point Adams, and the work around Scarborough and Coxcomb Hills had been completed.

The results of the survey are shown on one large hydrographic sheet, scale 1–10000, extending from Tongue Point to Tansy Point, including Young's Bay, on which are delineated the new shore-lines surveyed to and around Point Adams, and also the jetty, tramways, railroads, wharves, etc., comprising the improvements now being made by the United States engineers.

A second hydrographic sheet, scale 1–10000, shows the soundings made in Young's River and in the Lewis and Clarke River. These soundings were carried only to the limits of the topographical survey.

The projection on a scale of 1–20000 contains only the work around Scarborough Hill and the hills back of Point Ellice. The prairie on Scarborough Hill is a very bright and permanent mark as seen from the ocean.

Mr. Rockwell gives in his report many details of local interest relative to the changes which he observed and mapped in the course of his survey.

He acknowledges courtesies extended to the party, and facilities afforded for his work by Maj. T. H. Handburg, who furnished transportation on a tow-boat whenever desired. Also by Maj. J. T. Blakeney, in charge of the Life-saving Station at Fort Canby, the use of a boat and crew having been placed by him at Mr. Rockwell's disposal when needed. He had also full use of the records from Mr. L. Wilson's automatic tide-gauge.

Following are the statistics of the season:

| | |
|---|---|
| Hydrography: | |
| Number of miles run in sounding | 269 |
| Number of angles measured | 2,275 |
| Number of soundings | 15,268 |
| Area of hydrography in square miles | 15 |
| Topography: | |
| Number of miles, area of contours (about) | 13 |
| Number of miles of new shore-line retraced | 8 |
| Number of miles of shore-line examined | 22 |

*Exchanges of telegraphic signals for longitude between Port Townsend and Seattle, between Seattle and Walla Walla, between Walla Walla, Washington Territory, and Helena, Montana, and between Helena and Spokane Falls, Washington Territory.*—Reference was made in the last Annual Report to the longitude determination, Portland, Oregon–Seattle, Wash., as having been completed shortly after the close of the fiscal year 1888. Assistant Edwin Smith, who had been in charge of the party at Portland, then proceeded to Seattle, Wash., while Subassistant R. A. Marr went to Port Townsend, where he selected a longitude station on the bluff in the garden of the United States Marine Hospital, and prepared it for occupation. The line Port Townsend–Seattle was determined by exchanges of telegraphic signals for longitude on seven nights between July 14 and 23, the observers changing stations July 18.

While at Seattle Mr. Smith observed for the magnetic declination dip and intensity on three days, and at Port Townsend on two days. At the latter station he made a trigonometrical connection between the new astronomical station and the triangulation. The latitude of the station at Seattle was determined by Mr. Marr.

Mr. Smith then proceeded to Walla Walla, Wash., arriving there July 25. Unwarrantable delay in forwarding his instruments by agents of the express company delayed the beginning of exchanges of signals with Seattle, and upon their final arrival, July 31, cloudy weather set in, so that it was not till August 9 that work could be begun. Between that date and the 18th, exchanges of signals were obtained on nine nights, the observers having changed places August 13.

On the 19th, Mr. Marr went to Helena, Mont., where he selected a station and prepared it for longitude operations, and on the 21st Mr. Smith returned to the station at Walla Walla. Successful exchanges of signals for longitude were obtained between Helena and Walla Walla on five nights in succession, August 25 to 29 inclusive, after which the observers changed places and five more nights were obtained between September 1 and 7, inclusive.

On the 5th of September, in accordance with his request, Assistant Smith was relieved by Assistant C. H. Sinclair, and in conformity with instructions proceeded to Washington and reported for duty at the office. Mr. Sinclair having taken charge of Mr. Smith's party at Helena, Mr. Marr went to Spokane Falls, Wash., to select a station and prepare it for occupation. The determination of the line Helena–Spokane Falls was made by exchanges of signals on eight nights between September 13 and September 29, the observers having changed places between the 24th and 25th.

In accordance with instructions the longitude parties were then transferred to San Francisco to make determinations needed in California. Reference to their work in that State is made under a heading in Section X.

*Examination and report of changes in the water front at Seattle and vicinity.*—In accordance with instructions bearing date of March 11, 1889, Assistant J. F. Pratt indicated from an actual reconnaissance on a proof of a photolithographic chart of Seattle Harbor, scale 1–20000, all the more important improvements made along and in the immediate vicinity of its water front up to April 10, 1889, and submitted a tracing compiled to show the additional area recommended to be included in the new survey and chart.

Mr. Pratt has made a special report upon the rapid development of Seattle and West Seattle. The water front proper has entirely changed in the last two and a half years. On June 6 a terrific fire consumed the entire business portion of the town and all of its water front with the exception of the five minor wharves north of the business portion. All of the wharves were immediately rebuilt, and at the date of Mr. Pratt's report, less than three months after the fire, extensions were being made to the limits existing June 6.

Mr. Pratt deems it of great importance that a resurvey of the Seattle water front, with extensions covering Salmon Bay, Lake Union, and a portion of Lake Washington, should be made within the next eighteen months. Immediately upon the Territory becoming a State the disposal of its tide-lands, which are now held in trust by the United States, will be agitated, and the establishment of the water front from trustworthy soundings establishing the lines of high water, half-tide, and low water will come within the province of the Survey.

During the winter Mr. Pratt was engaged in office work, and, as stated under a preceding heading, took the field in March, 1889, under instructions to make an examination of the Seattle water front, respecting the results of which he made a special report.

In May he was at Port Orchard, Wash., having been directed to organize a party on the schooner *Yukon*, to make a detailed survey of that locality for the use of the Commission appointed to select a site for a Navy Yard on the Pacific coast north of the forty-second parallel.

An abstract of Mr. Pratt's report on this subject will appear under the heading, "Special Operations."

*Hydrographic surveys in the vicinity of Cape Flattery and in Neeah Bay, Washington Territory.*—At the beginning of the fiscal year the party on board the steamer *McArthur*, Lieut. J. C. Burnett, U. S. N., Assistant, Coast and Geodetic Survey, commanding, had been for two months in Neeah Bay, Straits of Fuca, Washington Territory, engaged in a hydrographic survey of that bay and approaches. The work laid out included also the coast hydrography in the vicinity of Cape Flattery.

Progress was very slow during August and September, the fog being so dense outside of the Straits that signals could not be recognized at a distance of half a mile. No hidden dangers were

found except those commonly known as Duntze Rocks, at the entrance to the Straits of Fuca. A careful examination was made of these rocks, and the least depth found to be about three fathoms.

The currents in the narrow passage between Tatoosh Island and Cape Flattery were observed to be very strong and treacherous, hence the passage can not be recommended to navigators.

Lieutenant Burnett reports that he knows of no point at which an aid to navigation could be advantageously located, except off Umatilla Reef, where a whistling buoy would be of great service to steamers bound up and down the coast. This reef is about twelve miles south of Cape Flattery and two and a quarter miles off-shore.

In accordance with instructions from the Hydrographic Inspector, work was closed October 2 and the party returned to San Francisco.

Efficient service was rendered by the officers attached to the party: *Lieut. C. A. Gove, U. S. N.; Ensigns J. A. Bell, T. K. Hill, and J. P. McGuinness, U. S. N.; Passed Assistant Surgeon C. W. Deane, and Passed Assistant Engineer W. B. Dunning, U. S. N.

For the season the statistics are –

| | |
|---|---|
| Hydrography: | |
| Area sounded in square geographical miles | 273 |
| Number of miles (geographical) run while sounding | 673 |
| Number of angles measured | 4,099 |
| Number of soundings | 6,903 |
| Number of tidal stations established | 1 |

The results of the work are shown on two hydrographic sheets, one on 1-40000 scale—the vicinity of Cape Flattery; the other of Cape Flattery and Neeah Bay, scale 1-10000.

*Triangulation and topography of Saratoga Passage, Penn's Cove, Oak Harbor, Crescent Harbor, and Skagit Bay, Washington Territory.*—For the season of 1888, the work assigned to Assistant J. F. Pratt was the continuation of the survey of Saratoga Passage and the waters adjoining.

By April 12, the weather having become sufficiently settled to begin preparations for work, the schooner *Yukon* was towed by her steam-launch from winter quarters in Eagle Harbor to Seattle Harbor, and was there renovated, refitted, and put in suitable condition for service in inland and protected waters. Leaving Seattle April 28, the working ground was reached, after some unavoidable delays, on May 2, and the *Yukon* moored in Utsalady Harbor. From the fact that there are no safe anchorages along the west shore of Camano Island, and on account also of the character of Skagit Bay, which is an immense tide-flat, a greater portion of the work had necessarily to be done from Utsalady Harbor as an anchorage, although Penn's Cove and Oak Harbor and their vicinity were surveyed from an anchorage at Coupeville, and the stations Besnir, Delta Rock, and Olney were occupied, and some of the most northerly signals erected from an anchorage at Ala Spit.

The triangulation was begun at Dixon Station and carried northward along the Camano Island side of Saratoga Passage into Penn's Cove, Oak Harbor, and Crescent Harbor, then through the strait leading from Saratoga Passage into and over Skagit Bay as far as and including the stations Olney and Delta Rock. A connection was made also with the triangulation of Port Susan, which had been previously brought across the Stanwood Flats to the stations Land and Stanwood.

From the stations Cox and Delta Rock, the triangulation develops in two branches, one going by way of Deception Pass to a connection with the triangulation of the Straits of Fuca, and the other by way of the Swinemish Flats to a connection with that of Padilla Bay.

The topographical survey was commenced at the triangulation stations Rock and After, in Saratoga Passage; carried around the shore of Camano Island by way of Utsalady Harbor to a connection with former work at the mouth of the west pass of the Stillaguamish River, and also along the east shore of Whidbey Island by way of Penn's Cove, Oak Harbor, and Crescent Harbor, as far as the triangulation station Frostad, in Skagit Bay.

Owing to the peculiar effects of the tides, it was only practicable to do work in patches when the Skagit Flats were reached, and on some of the reclaimed portions.

In Penn's Cove the triangulation was carried to its head and the shore-line depending on this triangulation delineated to furnish a base for the hydrography.

With regard to the topography of Skagit River and Delta, Mr. Pratt observes that it will be slow and tedious, since the work can be done only at high tide; improvements, such as dykes, farms, etc., are numerous; three-fourths of a mile back from the bay shore all of its various branches are overhung with trees and bushes; the currents are very strong and the river and delta are lined with snags which are exceedingly dangerous to navigation. During the summer three of the regular river steam-boats were sunk by being carried out of their course by the rapid current and jammed against snags, which punched holes in them.

In the course of the season Mr. Pratt furnished Lieut. H. T. Mayo, U. S. N., Assistant Coast and Goedetic Survey, commanding the schooner *Earnest*, such geographical positions and tracings of shore-line as he required for his hydrographic work.

By the 20th of November winter began to set in, and in accordance with instructions previously received, arrangements were made to close field operations. On the 24th instant, the day after reaching Seattle, Mr. Pratt made an examination of Shilshole Creek, locally known as Salmon Bay, and having found it entirely suitable for laying up the *Yukon*, and hauling out the launch and small boats, etc., he had the vessel well secured there in winter quarters by December 13.

For the season the statistics are:

| | |
|---|---|
| Reconnaissance: | |
| Area of, in square statute miles | 67 |
| Lines of intervisibility determined as per sketch submitted | 116 |
| Number of points selected for scheme | 44 |
| Triangulation: | |
| Area of, in square statute miles | 65 |
| Signal poles erected, number of | 27 |
| Observing tripods built, number of | 11 |
| Stations occupied for horizontal measures, number of | 24 |
| Geographical positions determined, number of | 53 |
| Topography: | |
| Area surveyed in square statute miles | 37 |
| Length of general coast line in statute miles | 53 |
| Length of shore-line of rivers, creeks, and ponds in statute miles | 5 |
| Length of roads in statute miles | 38 |

The results of the topographical survey are shown on two sheets, each on a scale on 1–20000.

*Hydrographic surveys, including Saratoga Passage to Skagit Bay, the northwest coast of Whidbey Island, Rosario Strait, and Bellingham Bay.*—At the beginning of the fiscal year, as stated in the last Annual Report, the party in charge of Lieut. H. T. Mayo, U. S. N., Assistant Coast and Geodetic Survey, commanding the schooner *Earnest*, having completed a hydrographic survey of Holmes Harbor and Saratoga Passage, had taken up the hydrography of the northwest coast of Whidbey Island. Lieutenant Mayo had also in service the steam launch *Tarry-not*, but off Whidbey Island very little wind was required to make it unsafe to use her, that coast being so open to the Straits of Fuca.

Every opportunity of sounding afforded by smooth weather was, however, made available, and by July 19, 1888, soundings having been completed off the island, the *Earnest* proceeded on the 21st to Chuckanut Bay, where she was anchored, and on the 30th instant a hydrographic survey of Bellingham Bay was begun.

On August 12 the boiler of the *Tarry-not* having given out, it became necessary to send her to Seattle for repairs, and she did not return before September 1. In the meantime, soundings were carried on from the boats. Thick smoke caused some delay during the latter part of August and early part of September. Soundings in Bellingham Bay having been finished September 17, Lieutenant Mayo left his anchorage on the 20th instant for Utsalady Harbor, making that a base of operations for executing the hydrography from Saratoga Passage to and including Skagit Bay. Soundings were begun September 21 and carried on till October 25, at which date the

hydrographic work had reached a limit beyond which it could not then be prosecuted to advantage. Next day, in pursuance of orders from the Hydrographic Inspector, Lieutenant Mayo left for Olympia, and after his arrival there laid up the *Earnest* in winter quarters.

He has submitted four descriptive reports to accompany his hydrographic sheets. These reports give full details of the hydrographic characteristics of the localities under survey, improvements, resources, and means of communication.

Ensign A. C. Almy, U. S. N., was attached to the party throughout the season.

The statistics are:

| | |
|---|---|
| Hydrography: | |
| Number of miles (geographical) run while sounding | 1,266 |
| Number of angles measured | 6,235 |
| Number of soundings | 23,226 |

In March, 1889, instructions were received from the Superintendent to resume hydrographic operations from the limits of work of the preceding season at as early a date as practicable, and on the 11th of May the *Earnest* was taken to Eagle Harbor, Cypress Island, where, on May 20, work was begun of the hydrographic sheet of Rosario Strait, and was in progress at the close of the fiscal year.

On June 13, Lieut. J. N. Jordan, U. S. N., reported for duty on the *Earnest*, and on the 16th Lieutenant Mayo, having been detached, Lieutenant Jordan was assigned to the command of the vessel and the charge of the hydrography. He reports that the Rosario Strait work has to proceed slowly on account of the extraordinary tidal currents that flow through the Strait to and from the Gulf of Georgia and the Straits of Fuca. The part of the Strait being open to the Gulf of Georgia, the northerly winds from this Gulf soon make such a sea that the boats were forced to seek shelter.

Tide gauges were established at Allan Island, Chuckanut Bay, Utsalady, and Eagle Habor, Cypress Island. These gauges were each observed day and night for a lunar month.

Ensign F. K. Hill, U. S. N., was attached to the party under the command of Lieutenant Jordan.

For the work of 1889, up to June 30, the following statistics are reported (scale of hydrography 1-20000):

| | |
|---|---|
| Number of miles run in sounding | 939 |
| Number of angles measured | 5,138 |
| Number of soundings | 19,040 |

*Triangulation and topography of the Gulf of Georgia, including Lummi, Birch, and Semi ah-moo Bays.*—The triangulation and shore-line resurvey of the Gulf of Georgia and the bays connecting with it by the party, in charge of Assistant J. J. Gilbert, which was mentioned in the last Annual Report, made good progress after the beginning of the fiscal year, the weather throughout the season being generally quite favorable.

Mr. Gilbert established his first camp on the north end of Lummi Island, and after finishing most of the triangulation within reach from that point he took up the topography. On September 4, all work having been done that could be done to advantage from the first camp, the party was transferred to Semi-ah-moo, where it remained till the close of field operations.

Early in October Mr. Gilbert spent two days in making outline sketches of the shores of the Gulf of Georgia. These were inked soon after and forwarded to Assistant Davidson.

On October 25, after a week or two of stormy weather, further work was suspended for the season, and on the 27th the scow, which had served as a means of transportation for the party, was moored for the winter in Fidalgo Bay.

The triangulation executed extends from Orcas Island to the boundary between the United States and British Columbia. The topography includes the shores of Orcas Island from a point nearly two miles south of Point Lawrence to a point a mile and a half east of Point Doughty; all of Clark, Barnes, Matia, Sucia, and Patos Islands; the north end of Lummi Island from Village Point to Lummi northeast; the main shore from Hale's Passage to the Boundary, including

Lummi Bay and sloughs and Birch Bay and Drayton Harbor, and that portion of Point Roberts which is south of the boundary.

The statistics of the season's work will be included in those given for the fiscal year.

During the winter and spring Mr. Gilbert finished the inking of his topographical sheets, made duplicate tracings of them, reviewed and made fair copies of his computations, duplicated and entered sketches in his original and duplicate descriptions of stations; made a report with sketch of his season's work, and prepared six descriptive reports, illustrated with photographs to accompany the sheets of his survey.

Having received and placed a new engine in the steam-launch *Fuca*, he was instructed on May 20, through Assistant Davidson, to take up field work in the Gulf of Georgia and Washington Sound, and began at once to prepare the steam-launch for service. On May 23 he left Olympia in the launch for the field, and having established a camp on Shoal Bay and brought the scow from Fidalgo Bay to camp, he began early in June a reconnaissance over Blakely Island and about Obstruction Pass and decided upon a plan of triangulation. The topographic survey was in progress at the close of the fiscal year.

On June 24, having determined points enough to proceed with the topography, he took that up in order to supply the shore-line and positions of signals to the hydrographic party then at work near Obstruction Pass.

For the whole year the statistics of field work are as follows:

| | |
|---|---|
| Triangulation: | |
| Number of signals erected | 52 |
| Number of stations occupied | 28 |
| Topography: | |
| Number of miles of shore-line surveyed | 99 |
| Number of miles of shore-line of sloughs | 10 |
| Number of miles of roads | 35 |
| Area of topography in square miles | 33 |
| Number of topographical sheets finished | 6 |

## SECTION XII.

### ALASKA, INCLUDING THE COAST, INLETS, SOUNDS, BAYS, RIVERS, AND THE ALEUTIAN ISLANDS.

(SKETCH NO. 13.)

*Hydrographic surveys in Stephens and in Cleveland Passages, and vicinity and in Portland Canal and vicinity, Southeastern Alaska.*—Reference was made in the last Annual Report to the beginning of surveys in southeastern Alaska, which had been assigned by instructions issued in the spring of 1888 to Lieut. Commander Charles M. Thomas, U. S. N., Assistant Coast and Geodetic Survey, commanding the steamer *Patterson*.

The *Patterson* left San Francisco, Cal., April 7, 1888, and after a rough passage, with strong head winds and much fog, arrived at Victoria, British Columbia, April 14.

Attached to the party in charge of Lieutenant-Commander Thomas were the following-named officers:

Ensign James H. Oliver, U. S. N., executive officer and in charge of tidal observations; Ensign Albert N. Wood, U. S. N., navigator and in charge of astronomical and magnetic observations; Ensigns S. S. Wood, Albert M. Beecher, John McDonald, and George R. Slocum, U. S. N., watch officers and on general field duty, and Passed Assistant Surgeon Robert Whiting, U. S. N. Messrs. John McHenry, rated as paymaster's yeoman, and Harry L. Ford, rated as master-at-arms, were employed as draughtsmen.

On April 15 the *Patterson* steamed to Port Townsend, Wash., where telegraphic comparisons were obtained with the Naval Observatory at Mare Island, California, for a final rating of chronometers. After getting signal lumber on board, and coaling at Departure Bay, the *Patterson* went

to Port Simpson, British Columbia, where the steam launch *Cosmos* was put afloat, and where the astronomer of the party was left with chronometers and instruments to get observations for time.

The *Patterson* then proceeded to the working ground in the vicinity of Stephens Passage, and on April 27 reached Taku Harbor, a well-known and secure anchorage. Tidal observations were begun the next day, and on the 30th the astronomer arrived from Port Simpson in the *Cosmos*.

A reconnaissance for a suitable base line was then begun, and both shores of Stephens Passage having been thoroughly examined without finding one, Lieutenant-Commander Thomas was forced to decide upon a trial of wire measurement over water.

The place selected was between two small islands on the western shore of Stephens Passage, nearly opposite the entrance to Limestone Inlet. Between signals established on these islands the wire was stretched, and after two preliminary measurements had been made, which were not wholly satisfactory on account of defects in the methods of supporting the wire over water, a third measurement was made, using all the boats of the ship as supports. This plan was deemed the most successful, all of the conditions being favorable, and the result of this third measurement (3.875.97 metres) was adopted as the length of the base.

Lieutenant-Commander Thomas gives a description of the method, as follows:

"Four pulling boats and two skiffs, six in all, were prepared as supports for the wire by placing upright stanchions in the bow and stern of each boat, with a rounded cross-piece between them, planed smooth and sand-papered, so as to offer as little friction as possible to the wire. The gig was used as a flag-boat, Ensign S. S. Wood in charge, about midway between the stations, and was kept in position on the line between stations by the use of the sextant and boat-sheet; the other boats were spaced as nearly as possible at equal intervals apart, and kept this alignment by ranging on the flag-boat and farther signal. Ensign Beecher landed at North Base station with one end of the wire, reel, and spring-balance scales. Ensign Oliver, in the steam-launch *Vixen*, with the other reel then steamed slowly towards South Base, and upon passing each boat placed the wire over the fore and aft cross-piece, and on arriving at the station the reel was placed in position with axis over the centre mark, and everything gotten ready for heaving taut the wire.

"These preparations were made over an hour before the turn of the tide, and at slack-water the signal was given from the *Vixen's* whistle to heave taut the wire, the reel at South Base being kept rigid and the crank-handle of the one at North Base being turned until the wire was taut, and a pressure of thirty pounds put upon it, as shown by the scales."

The employment of boats as supports for the wire, Lieutenant-Commander Thomas observes, is unquestionably the best plan that can be used for base measurements under the peculiar conditions of the Alaskan survey, and by following this plan he obtained gratifying results in all future base measurements.

By astronomical observations North Base station was found to be in latitude 57° 59′ 53″.8 north, and in longitude $8^h\ 56^m\ 17^s.6$ west of Greenwich. The longitude of Cape Fanshaw was, as follows from the mean of two determinations agreeing closely made in 1887 and 1888, $8^h\ 54^m\ 16^s$ west of Greenwich.

A self-registering tide-gauge was put up May 1 at Taku Harbor, and curves of record obtained during a lunar month. These curves agreed remarkably well with those plotted from the readings of the tide-staff. The mean rise and fall of the tides was found to be 13.82 feet.

The following harbor-sheets were plotted from the general work falling upon the projection-sheet of Stephens Passage and vicinity: Taku Harbor, scale 1–5000; Limestone Inlet, scale 1–5000; Port Snettisham, scale 1–30000, and Oliver Inlet, scale 1–10000.

With regard to these localities, their relation to Stephens Passage, their approaches, etc., Lieutenant-Commander Thomas gives full details in his report, but space is available here for only a few extracts:

"Taku Harbor is situated on the eastern shore of Stephens Passage, three miles to the southward and eastward of Grand Island, and twenty miles from the thriving mining town of Juneau. It is a perfectly secure anchorage, and the best harbor of refuge between Portage Bay (Frederick Sound) and Juneau, and is free from hidden dangers.

"Limestone Inlet is situated two miles to the southward of Taku Harbor and on the same shore of Stephens Passage. It is not a good anchorage on account of the bad holding ground, and it is open to the westerly winds sweeping across the passage. * * * Taking into consideration the proximity of the excellent anchorage afforded in Taku Harbor, vessels will seldom have occasion to seek shelter in Limestone Inlet.

* * * * * * *

"Oliver Inlet is situated on the northern end of Glass Peninsula and empties into the western branch of Stephens Passage. It is accessible only to steam-launches and smaller boats at high water, the narrow entrance being barred at low water by a natural dam formed by a nest of rocks over which the water flows like a miniature water-fall during the latter part of the ebb tide. On the top of high water small vessels drawing not over six feet can pass with safety.

* * * * * * *

"There is a portage of about one-half mile in length connecting Oliver Inlet with Seymour Canal, and on this portage the Indians have placed skids, after the fashion of laying railroad ties, for convenience in hauling their canoes. By means of this short portage the Indians have direct communication between Frederick Sound and Juneau by way of Seymour Canal, the portage, Oliver Inlet, and Gastineau Channel, thus avoiding the large open water of Stephens Passage, except the short run across the passage between the inlet and Gastineau Channel.

"Oliver Inlet will have no other practical use than that just described for the convenience of the Indians or for mining prospectors using canoes.

"Port Snettisham is a large T-shaped bay on the eastern shore of Stephens Passage and ten miles south of Grand Island, consisting of the main entrance and the north and south arms. The former is four miles long and from one to one and a half miles in width; the north arm is eight miles in length and varies in width from one and a half miles to half a mile; the south arm is four miles in length and in width varies from one and a half miles to one mile. This large bay is clear of hidden dangers, but is unsuitable as a harbor of refuge on account of the great depth of water, the only feasible anchorages being found at the head of either arm in twenty fathoms of water close to the flats, which are bare at low water, and at distances from the entrance of eight and twelve miles, respectively."

The photographic views which accompany Lieutenant-Commander Thomas's report add much to the interest with which his full descriptions of the scenery and the hydrographic characteristics of the localities under survey are read.

On June 21, having completed the survey of Port Snettisham, he shifted position to Holkam Bay, and anchored in twenty-five fathoms of water with poor holding ground, so he kept the steamer under banked fires every night, proceeding with her each morning at 6 o'clock to the field, dropping the launches as nearly as possible on the completed sounding of the lines of the day before, picking them up again at 7 p. m., and returning to the anchorage for the night, thus economizing valuable time, and enabling him to finish the triangulation, topography, and hydrography at the same place, abreast the northern point of entrance to Holkam Bay.

Lieutenant-Commander Thomas observes that the flood tide enters Stephens Passage from Frederick Sound and flows to the northward; it enters also from Chatham Strait through Saginaw Channel into the western branch of the passage, setting to the eastward, and meeting in the vicinity of Point Arden, and as far south as Grand Island. The action of the ebb is the reverse of that of the flood.

Strong tide rips were observed at the entrances to Port Snettisham and Holkam Bay.

On June 26, in accordance with instructions received during the latter part of May, Lieutenant-Commander Thomas closed hydrographic operations in Stephens Passage and vicinity, and on June 30 left Juneau for Port Simpson, British Columbia, in order to prepare for a general survey of Portland Canal, Wales Passage, and Pearse Channel. These surveys have been asked for by the Department of State, in view of their bearing upon the location of the boundary line between Alaska and British Columbia.

On July 3, 1888, having reached the working ground, he begun the construction of signals, and in the *Cosmos* made a personal reconnaissance of Portland Inlet, Wales Passage, and Pearse

Channel for suitable anchorages for the *Patterson*, and also for localities for a shore base line. No site on shore for a base could be found, so resort was made to the method already tried with success, of wire measurement over water. For this purpose a site was selected on the southeastern end of Pearse Island between two points, making a long shallow bight in the shore-line, which afforded a base of about three miles in length, from which could be developed well-conditioned triangles for the triangulation.

On July 5 the *Patterson* shifted anchorage from Point Simpson to Somerville Bay, and next day erected the tide-staff and established a self-registering tide gauge for a lunar month. Tide-staffs were also erected during the remainder of the season at the following anchorages of the steamer: Halibut Bay, connected with Sullivan Bay; Ford's Cove and Winter Harbor, connected with Halibut Bay.

Astronomical stations were established at the head of Portland Canal, at the south end of Pearse Island, and at the right entrance to Halibut Bay, and at each of these stations observations were made for the magnetic declination.

On August 1 the survey of Portland Inlet and the triangulation of the northern part of Pearse Channel having been completed, the *Patterson* shifted her anchorage to Halibut Bay in Portland Canal, and from this anchorage work was prosecuted till August 19, when a point having been reached about twelve miles to the northward of Halibut Bay, the anchorage was again shifted to Ford's Cove, twenty-seven miles further up the Canal. On September 2 the steamer left Ford's Cove for the head of the Canal and anchored near the flats at the mouth of Bear River. On September 19, having completed the survey of Portland Canal, Lieutenant-Commander Thomas left his anchorage at its head for his final anchorage during the season at Winter Harbor, concluding his work by surveys of Pearse Channel, Wales Passage, Fillmore, Willard, and Hidden Inlets and Tongass Pass.

The total length of Portland Canal from its mouth, abreast of Ramsden Point, to the Bear River flats is sixty nautical miles.

Winter Harbor is situated at the southern end of Pearse Island, running parallel with Wales Passage, and opening out into Pearse Channel. It is a long narrow inlet, thoroughly protected and offers the safest anchorage found by Lieutenant-Commander Thomas in Alaskan waters.

Portland Inlet and Portland Canal are free from all hidden dangers, and the navigation of these waters is perfectly simple if a vessel keeps an ordinary distance from the shore-line. The numerous outlying islets and detached rocks are close in-shore and are well indicated upon the chart.

Pearse Channel, from its junction with Portland Canal to Wales Passage, is clear to navigation, but south of this point to the end of the Channel near its junction with Tongass Pass it is foul ground, and the most ordinary prudence would forbid its attempted navigation.

Wales Passage, dividing Wales from Pearse Island, is absolutely free from hidden dangers.

During the winter months, the north winds drawing down Portland Canal and Observatory Inlet, like huge funnels, blow with great violence through Portland Inlet, rendering the crossing of Dixon Entrance at this point a hazardous undertaking, except to the staunchest steamers.

On October 14, Lieutenant-Commander Thomas having completed the surveys called for in his instructions, left for Port Simpson, and from thence proceeded to San Francisco by way of Departure Bay, Port Townsend and Victoria, British Columbia, arriving at San Francisco November 2.

The completion of these important surveys was duly communicated to the Secretary of State.

In closing his very comprehensive report, from which the extracts here made present but a condensed abstract, Lieutenant-Commander Thomas expresses his thorough satisfaction with the manner in which every member of his party fulfilled the duties assigned to him. For the fine set of photographs submitted with his records he was indebted to Ensign S. S. Wood and Mr. John McHenry.

The results of the season's work in Portland Inlet, Portland Canal, Pearse Channel and vicinity, are shown upon four hydrographic sheets on scales ranging from 1-5000 to 1-8000, and upon twelve shore-line or topographic sheets on scales of from 1-5000 to 1-80000.

For the entire season, from April 7 to November 2, 1888, the following is an abstract of the statistics reported:

| | |
|---|---|
| Triangulation: | |
| Number of stations occupied with theodolite | 625 |
| Number of angles observed | 16,990 |
| Topography: | |
| Approximate area of the country surveyed in square miles | 1,055 |
| Number of miles of shore line surveyed | 661 |
| Hydrography: | |
| Number of miles run in sounding | 1,407 |
| Number of angles observed | 10,087 |
| Number of soundings | 6,224 |
| Number of specimens of bottom obtained | 51 |
| Number of observations of currents | 38 |
| Astronomical work: | |
| Number of stations occupied for observations of longitude | 2 |
| Number of stations occupied for observations of azimuth | 1 |
| Number of stations occupied for observations of latitude, longitude, and azimuth | 3 |
| Number of nights when observations for latitude were made | 19 |
| Number of pairs of stars observed for latitude | 174 |
| Number of azimuths observed | 21 |
| Magnetic work: | |
| Number of magnetic stations occupied | 2 |
| Number of sets of observations for declination | 16 |
| Number of sets of observations for dip | 7 |
| Number of sets of observations of deflection | 6 |
| Number of sets of observations of oscillation | 6 |

During the winter, Lieutenant-Commander Thomas was occupied in San Francisco with his office work, and on April 1 was detached from the command of the *Patterson* and ordered to special duty at the Office of the Survey in Washington. On July 1 he was directed to assume the duties of Hydrographic Inspector of the Survey, relieving Lieut. Commander W. H. Brownson, U. S. N.

In the spring of 1889 Lieut. H. B. Mansfield, U. S. N., Assistant Coast and Geodetic Survey, an experienced and skillful hydrographer, was assigned to the command of the *Patterson*, with instructions to resume the surveys in southeastern Alaska in Stephens Passage and neighboring waters.

Having left San Francisco April 10, and made the usual stoppings at Port Townsend, Victoria, Departure Bay, and Port Simpson, he arrived on the 27th of the month in Cleveland Passage, a branch of Stephens Passage, from which it is separated by Whitney Island. A tide-gauge was at once put up, astronomical observations begun at Cape Fanshaw, a base line measured, and signals for the triangulation erected. From this time the survey was steadily prosecuted till the close of the fiscal year, at which date the triangulation had covered an area estimated as of about four hundred square miles, the shore-line surveys and hydrography keeping pace with it.

The statistics of this work, which was in active progress June 30, 1889, will be given with the fuller statement in regard to it in the next Annual Report.

Service assigned to Lieutenant Mansfield earlier in the fiscal year while in command of the steamer *Hassler* is adverted to under headings in Section X.

*Tidal record continued at the automatic tidal station at St. Paul, Kadiak Island, Alaska.*—The automatic tidal station at St. Paul, Kadiak Island, Alaska, has been continued under the supervision of Assistant George Davidson, with Mr. Fred. Sargent, tidal observer, in immediate charge.

Whenever practicable, Mr. Davidson has secured the services of officers of the Navy and of the Revenue Marine to examine the condition of the clock and apparatus. In 1889 Lieut. John Cant-

well, of the Revenue Marine, carried a leveling instrument from Unalaska to Kadiak, and leveled between the staff and the bench-marks. He reported the connection good. There had been a change of wharf and a necessary change in the position of the tide-gauge. Mr. Davidson has examined all the sheets and tabulations as they have reached San Francisco, and has forwarded them to the Office.

During the winter there is no communication with this station. The Survey is indebted to the Alaska Commercial Company for facilities afforded in the transmission of records and letters each way.

*Collection of data for the Coast Pilot in southeastern Alaska and establishment of a tidal station at Unalaska.*—In pursuance of the duty assigned to Lieut. Commander H. E. Nichols, U. S. N., Assistant Coast and Geodetic Survey, in the collection of material and the preparation for publication of a new edition of the Coast Pilot of Alaska, he was instructed early in September, 1888, to proceed to southeastern Alaska and obtain from the pilots and others familiar with the waters of that coast data that would be useful in regard to steamer routes, channels, and other matters related to the work in hand.

He was absent from San Francisco on this service till October 19, and on his return took up the preparation of manuscript for the Alaska Coast Pilot.

In May, 1889, in accordance with instructions, he made arrangements for having a staff-gauge set up at Unalaska, and the heights and times of high and low water observed day and night as continuously as possible for ninety days, beginning about June 1, 1889. By permission of the Alaska Commercial Company the tide-staff was located at their wharf in Unalaska.

*Preliminary survey of the frontier line between Alaska and British Columbia.*—Reference more in detail will be made under the heading "Special Operations," towards the end of Part II of this volume, to the assignment of Assistant J. E. McGrath and Subassistant J. H. Turner to the charge of the preliminary surveys undertaken at the instance of the State Department for a provisional determination of the frontier line between Alaska and British Columbia along the one hundred and forty-first meridian of west longitude, at or near where it crosses the Yukon River.

The parties in charge of these officers, having been organized at San Francisco in the winter and spring of 1889, and fitted out for an absence of perhaps two years in Alaska, left the above-named port June 15, and on the 27th of June arrived at Iliuliuk Harbor, Unalaska Island.

## SECTION XIII.

### KENTUCKY AND TENNESSEE. (SKETCHES NOS. 1, 6, 15, 17, and 18.)

*Geodetic leveling, from near Cairo, Ill., across western Kentucky and Tennessee.*—Reference will be made under a heading in Section XIV to the line of geodetic leveling run from a point north of Cairo to the southward through western Kentucky and Tennessee, by Subassistant Isaac Winston, in the autumn and winter of 1888–'89, this line being intended ultimately to form a check connection between points on the line of transcontinental leveling near the thirty-ninth parallel and points on the Gulf of Mexico.

*Occupation of stations for connecting the triangulation of the State of Tennessee with the primary triangulation in northern Georgia.*—The triangulation for the extension of geodetic operations in the State of Tennessee, and the connection of the survey in that State with the triangulation in northern Georgia and Alabama, was advanced in the summer and autumn of 1888 by Prof. A. H. Buchanan, Acting Assistant, who was in camp with his party at Harvey Station, Tennessee, on July 1 of that year.

Upon completing observations of horizontal and vertical angles at Harvey Station, Professor Buchanan transferred his party to station High Point, a hill in northwestern Georgia distant fifteen miles in a southwesterly direction from Chattanooga, Tenn., and having an elevation of 2,403 feet. Between July 23 and August 17 observations at High Point were finished, and arrangements were made for the occupation of Cohutta Mountain, 4,162 feet high, in the northeastern part of the State of Georgia, and about forty-five miles due east (nearly) from High Point. Work at

Cohutta was finished September 27, and in accordance with instructions, Professor Buchanan closed operations for the season.

It had been intended that he should resume field-work at the opening of the season in 1889, but, owing to a lack of funds, instructions were necessarily delayed till near the close of the fiscal year.

*Occupation of a station in Tennessee for magnetic determinations.*—One of the stations occupied by Assistant James B. Baylor, in the course of the magnetic tour assigned to him by instructions dated early in July, 1888, was at Nashville, Tenn.

There had been a magnetic station at Nashville in 1877, at the Vanderbilt University, but this being no longer available, a new station was selected but a few feet from the former one. The new station was occupied August 6, 7, and 8, the magnetic declination, dip, and intensity being determined on two days, and the true north by observations of the sun on one day.

Other magnetic stations occupied by Mr. Baylor are referred to under headings in Sections VIII, IX, XIV, XV, and XVI.

## SECTION XIV.

OHIO, INDIANA, ILLINOIS, MICHIGAN, AND WISCONSIN. (SKETCHES Nos. 1, 14, 15, 17, and 18.)

*Determinations of the magnetic elements at stations in Ohio, Indiana, Illinois, and Wisconsin.*—The regular field determinations of the magnetic elements were resumed by Assistant Jas. B. Baylor under instructions dated early in July, 1888. The stations to be occupied were distributed throughout the States between the Alleghanies and the Mississippi River; between the Mississippi and the Rocky Mountains, and those bordering on the Gulf Coast.

At Cleveland, Ohio, the station of 1880 was re-occupied, and the magnetic declination, dip, and intensity determined on July 23 and 24. For the true north, the meridian line established in 1871 by Assistant Edward Goodfellow in the Marine Hospital Grounds was used.

At Cincinnati, Ohio, it was found that the station of 1880 could not be used on account of some obstructions; a new station was therefore selected a few feet from it, and occupied July 30 and 31, and August 1. The magnetic elements were determined by observations on two days, and the line of true north by observations of the sun on one day.

At Terre Haute, Ind., the "Bache Fund" station of 1874, which was then established in a field in the prolongation of Fourth Street, had been built upon; hence, a new station was selected and located in an open lot one square from the old station. Two days were occupied for the determination of the magnetic elements and one day for observations of azimuth on the sun.

August 15, Mr. Baylor left Terre Haute, and on his arrival at Chicago on the next day established a station in the grounds of the old Chicago University, as near the station occupied by Dr. Thorpe in 1878 as the changed surroundings would admit. Observations were made at Chicago August 17, 18, and 19; two days for the magnetic elements and one day for line of true north.

At Milwaukee, Wis., the Lake Survey stations of 1859 and 1873 were found to be no longer available on account of the erection of new buildings, and a new station was selected near the North Point Light House in the northeastern suburbs of the city. The true north was established by observations of the sun on one day, and the values of the magnetic elements on two days, August 23 to 25 inclusive.

At Madison, Wis., the University Farm station was re-occupied August 30 and 31, the magnetic declination, dip, and intensity being determined on one day, and the true north on one day.

Other stations occupied by Mr. Baylor are referred to under headings in sections VIII, IX, XIII, XV, and XVI.

*Reconnaissance and building of signals in connection with the transcontinental triangulation in Ohio and Indiana.*—Instructions given to Assistant George A. Fairfield directed him to take the field as soon after July 1, 1888, as practicable, and build the signals needed to establish a connection between the triangulation near the thirty-ninth parallel which had advanced westward in charge of Assistant Mosman in Ohio and Kentucky, and that advancing to the eastward under his own direction in Indiana. Also to make the reconnaissance necessary to connect the triangulation of that State with both the north and south lines of the transcontinental work.

Mr. E. E. Torrey, Mr. Fairfield's foreman and signal-builder, having reported to him on July 2, plans were made for a signal one hundred and fifty-two feet in height to be erected at one of the stations. Mr. Torrey then proceeded to station Stow, Switzerland County, Ind., and beginning work immediately after his arrival, completed a signal at that point sixty-eight feet high on the 19th instant.

In the mean time, Mr. Fairfield had ordered lumber for the high signal at Green station, Jennings County, and Mr W. B. Fairfield, attached to the party as extra observer, left Boston for Indiana July 12, to make the necessary arrangements for putting it up.

On the 25th instant Assistant Fairfield arrived at North Vernon, Ind., which place he had selected as his headquarters for the season, it being near the center of the work, and at the junction of several railroads.

The lumber for the high signal, two car-loads containing more than sixteen thousand feet, was somewhat delayed in its arrival, but was all on the ground at Green station July 24. The building of this signal was begun at once, and was finished August 14. Its height, one hundred and fifty-two feet, is greater than that of any other signal built by the Survey.

At Stout station, Jefferson County, a signal one hundred and thirty-six feet in height was finished by the 6th of September, delays having occurred owing to the non-arrival of lumber and to heavy rains.

The other stations at which signals were erected, with their respective heights, were as follows: At Tripp, near North Vernon, Jennings County, a signal one hundred feet high; at Culbertson, Switzerland County, a signal one hundred and sixteen feet high; at Reizin station near Elrod, Ripley County, a signal one hundred and sixteen feet high, and at Patch station near Nashville, Brown County, a signal seventy-five feet high. The work of signal-building was completed for the season at Patch station, November 5. Mr. Fairfield deemed it inadvisable to undertake the erection of any more signals during the year, the weather having set in very rainy, rendering transportation difficult and progress slow.

From November 7 until field operations were finally closed, on December 10, the party was engaged in locating and removing obstructions on the lines between the signals already erected. Notwithstanding the great height of the signals about one-half of the lines required to be cleared of obstructions.

The work is now in such a condition that the chiefs of the parties engaged in the transcontinental triangulation can each occupy three stations at the respective ends of their lines, and while this is being done the three other signals can be erected, the remaining seven stations can then be occupied and the gap between the triangulations advancing east and west can be closed.

During the season, Mr. W. B. Fairfield made the reconnaissance necessary to connect the triangulation of the State with Assistant Fairfield's work on the north, and erected small signals at three stations to be observed upon from Weed Patch station. Earthenware pyramids were put down three feet below the surface, and temporary surface marks were left at these stations. Descriptions of the localities accompany the report.

The statistics of the work are:

Reconnaissance and signal-building—

| | |
|---|---|
| Signal poles erected, number of | 3 |
| Observing tripods and scaffolds built, number of | 7 |
| Observing tripods and scaffolds built, heights of, in feet | 68, 75, 100, 116, 116, 136, 152 |
| Days occupied in opening and verifying lines of sight, number of | 71 |

During the winter and until near the end of the fiscal year, Assistant Fairfield was engaged in office work, and in June, 1889, was instructed to resume field operations in Indiana as soon as funds became available.

*Lines of geodetic leveling carried from near Cairo, Ill., towards the Gulf of Mexico.*—Upon the completion of certain work of geodetic leveling in the State of Arkansas, reference to which is made under a heading in Section VIII, Subassistant Isaac Winston took up, under instructions, the extension of the lines of geodetic leveling from Cairo southward, intended ultimately to form a check connection between points on the transcontinental line of geodetic leveling near the 39th parallel and points on the Gulf of Mexico.

On October 1, 1888, Mr. Winston sent forward his party, consisting of Subassistant P. A. Welker, Mr. F. A. Young, recorder, and two rodmen, to Cairo direct, he himself proceeding by way of Memphis and Jackson, Tenn., in order to arrange with the Division Superintendent of the Illinois Central Railroad for the stoppage of his trains to put off and pick up the leveling parties while engaged in working along the line of the road. The official referred to, Mr. W. H. Clarke, with the approval of Mr. C. A. Beck, General Superintendent, responded very liberally to Mr. Winston's request, giving orders for the required stoppages not only to his passenger trains, but also to his freight trains, although the freight traffic over the road was very heavy. To these gentlemen the thanks of the Survey are specially due, the labors of the party having been greatly facilitated by their courtesy.

Upon the arrival of the party at Cairo, observations were made to determine the constants of geodetic levels Nos. 2 and 3, and work was then begun from bench-mark Z, established by Assistant J. B. Weir in 1885, at Villa Ridge, Ill., a station on the Illinois Central Railroad, twelve miles north of Cairo.

The method followed was that adopted for running the standard levels of the Survey, the forward measurement being made by one observer and the backward measurement by another. Computations of the results were kept up to date, and the discrepancy between the two measures was not allowed to exceed five millimetres per kilometre without remeasurement, in order to keep any discrepancy within the limit.

When the lines reached Cairo, connection was made with United States bench-marks Nos. 1, 2, and 3, established in 1876 by General C. B. Comstock, U. S. Engineers. Descriptions of these bench-marks had been furnished by the Secretary of the Mississippi River Commission.

A crossing of the Ohio River was made and the line continued across western Kentucky to the vicinity of Greenfield, Tenn., where, on January 6, 1889, field operations were closed for the season, the appropriation having become exhausted.

Permanent bench-marks, such as stones or brass bolts, secured by lead in brick walls or chimneys, were established in all towns through which the party passed, and printed notices were placed near them. In county towns the bench-marks were established on the court-houses wherever it was practicable to do so.

During the whole of the season it was necessary to place the instruments upon the railroad track at nearly every station, and the work was consequently much delayed by passing trains. In the latter part of December and in January delay was also caused by the necessity of cutting holes through the frozen crust of the ground for the tripod legs.

Mr. Winston expresses his indebtedness to Subassistant P. A. Welker for efficient and faithful service. Also to Mr. F. A. Young, recorder, who served satisfactorily.

The statistics are as follows:

GEODETIC LEVELING:

| | |
|---|---|
| Number of permanent bench-marks established | 16 |
| Number of temporary bench-marks established | 104 |
| Length of double line of leveling in kilometres | 130 |
| Elevations determined, number of | 120 |

*Continuation of geodetic operations in the State of Wisconsin.*—In August and September, 1888, Assistant C. O. Boutelle, in virtue of his assignment to the immediate supervision of the parties engaged in the State Surveys, made a reconnaissance in the State of Wisconsin in connection with Prof. J. E. Davies, Acting Assistant, who had special charge of geodetic operations in that State.

This reconnaissance resulted in rendering visible Lowell station from Arlington, an important line of the triangulation, and in deciding the general character and positions of a scheme of triangulation proceeding northwestwardly from the stations of the Lake Survey near Lake Michigan to the Mississippi River.

Geodetic operations in pursuance of this plan will be resumed as soon as funds become available.

## SECTION XV.

MISSOURI, KANSAS, IOWA, NEBRASKA, MINNESOTA, AND DAKOTA. (SKETCHES Nos. 1, 2, 14, 15, 17, and 18.)

*Measurement of a base line in connection with geodetic operations in the State of Minnesota.*—In continuation of geodetic operations in the State of Minnesota, Prof. W. R. Hoag Acting Assistant, having definitely located a primary base line upon Snelling avenue in the city of St. Paul, carried a line of levels over it in September, 1888, and upon the 21st of that month Assistant C. O. Boutelle, in immediate charge of State Surveys, took direction of the measurement, Professor Hoag assisting. The northern terminus was decided upon, and an observing tripod and scaffold, sixty-four feet high, built over it. All preliminary observations having been made, the actual measurement was begun October 17.

The line runs nearly north and south, its direction being less than six minutes of arc east of north, and its length is, at mean level of the sea, as derived from the measurement by the observer's reduction, 8,724.69 metres, or about five miles and four-tenths. The secondary six-metre contact-slide base apparatus was used. The bars, Nos. 3 and 4, were compared at the Office before being sent to St. Paul.

Mr. Boutelle was aided in the measurement by thirteen young students of engineering from the scientific department of the State University. He reports that during the entire period of measurement, which occupied parts of nine days, October 17 to 26 inclusive, no instance occurred of a wrong movement or of any delay in the measurement through awkwardness or carelessness. This he states was unprecedented in any of his previous experience.

Snelling Avenue is one of the graded streets of the city of St. Paul, and although intended to be straight it really curves so far to the west that it was necessary during the measurement to make an offset in order to carry the apparatus over the bridge, which crosses a deep cut of the St. Paul and Manitoba Railroad.

The southern end of the Avenue was not at that time graded, and was in the condition of an ordinary country road, with steep gradients. On this account Mr. Boutelle remeasured the last one hundred and eighty bars, where many slopes had from four to five degrees of inclination. These bars were measured in an opposite direction, with the slopes reversed, and the results of the two measurements showed a very gratifying agreement, the difference between them being about one millimetre. The mean temperature during the first measure was 66° Fahr., while on the remeasure it had fallen to 47.7° Fahr., thus affording a fair test of the co-efficient of expansion adopted for the base bars, which was 0.0000061 for each degree.

The whole number of bars in the base was one thousand four hundred and fifty-five; and of these one hundred and eighty were remeasured, making the whole number of bars measured sixteen hundred and thirty-five; this was done in forty-seven hours and thirty-four minutes, or at a rate of 34.4 bars per hour. The most rapid progress made was on October 23, when two hundred and seventy-nine bars were measured in six hours and thirty-four minutes, or at the rate of 42.5 bars per hour.

At the close of the measurement both ends of the line were carefully marked. Owing to the depth to which frost penetrates in Minnesota the lower marks were placed with their tops six feet below the surface. Over these brick piers were laid in cement to a height of four feet, and on these were placed single blocks of Kasota stone, three feet square and two feet high, the tops of which came to the surface. Into these tops copper bolts were set, a fine mark upon each indicating the terminus. Side monuments and piers of dressed stone with the usual inscriptions will be placed in position next season.

After having marked the ends of the base Mr. Boutelle returned to Washington and Professor Hoag ran lines of levels to refer the measured base to the level of the sea. Its mean height above sea-level is 288.3 metres, about nine hundred and forty-six feet.

In June, 1889, in pursuance of instructions, Professor Hoag began a reconnaissance for the connection of the base with the secondary triangulation of 1887 and for a final connection with the primary triangulation. He was occupied in this work at the end of the fiscal year.

*Determinations of the magnetic elements at stations in Iowa, Nebraska, and Kansas.*—Between September 2 and October 22, 1888, nine stations were occupied for determinations of the magnetic declinations, dip, and intensity in the States of Iowa, Nebraska, and Kansas by Assistant James B. Baylor.

At Davenport, Iowa, a station was occupied as near the station of 1877 as the changed surroundings would permit. Two days' observations finished the work at this station, one for the magnetic elements and one for the true north.

At Keokuk, Iowa, the station of 1877 was re-occupied during two days and similar observations made.

At Ottumwa, Iowa, a station was established in the grounds of the Adams High School, and the magnetic elements and true north line determined by observations on two days.

At Des Moines, Iowa, it was found that the station of 1877 was no longer available, on account of the erection of new buildings; another station was therefore established just across Ninth street, in the grounds of the State Capitol. The magnetic elements were determined by observations on two days and the line of true north by observations of the sun on one day.

On September 21 Mr. Baylor selected a new station at Omaha, Nebr., the point occupied in 1880 being no longer available on account of the proximity of electric wires. The station of 1888 was connected with the new astronomical pier. The determinations of the magnetic elements and of the line of true north occupied three days.

At Junction City, Kans., the location of the station had to be changed from that of 1879. A point was selected a few yards distant, and observations for the magnetic elements and true north line were made on two days.

At Emporia, Kans., a station was occupied a few feet distant from the station of 1878, and the magnetic elements determined by observations on one day and the true north by observations of one day.

At Wichita, Kans., a station was established in the grounds of the Garfield University. The sun was observed one day for azimuth and one day for latitude, and the magnetic elements determined by one day's observations.

At Dodge City, Kans., one day was occupied in magnetic determinations and one day for the true north line, a station having been selected a few feet from the one of 1878.

Other stations occupied by Mr. Baylor are named under headings in sections VIII, IX, XIII, XIV, and XVI.

*Occupation of stations for extending the transcontinental triangulation near the thirty-ninth parallel to the westward in Kansas.*—At the beginning of the fiscal year the party of Assistant F. D. Granger was in readiness for the occupation of station Adams, Wabaunsee County, Kans., waiting only for favorable weather to commence observations. The continuation of the transcontinental triangulation to the westward in Kansas had been assigned to Mr. Granger by instructions dated in May, 1888.

In addition to the usual observations of horizontal and vertical angles, determinations of latitude and azimuth were made at Adams station. During July the atmospheric conditions were generally favorable for the work, and observations were made upon six primary and fifteen tertiary objects.

Toward the end of the month Mr. Granger transferred his party to Clark station, nearly thirteen miles in a southwesterly direction from Adams station, and about a mile and a quarter northwest of the town of Eskridge, Wabaunsee County.

Soon after the establishment of the party in camp at Clark station a marked change in the weather occurred, followed by a series of violent storms, which interrupted greatly the progress of the observations. On the 3d of August an attempt was made to observe from the forty-five-foot tripod at the station, but the peculiar appearance of the western horizon, and a fall in the barometer of nearly three-fourths of an inch in three hours, induced Mr. Granger to take every precaution to secure the instruments and camp from what threatened to be a cyclone. The storm struck the camp about 7 o'clock in the evening, and the first gust of wind carried away and tore to shreds the flies of eight tents; the next gust, heavier still, prostrated or carried away five tents, exposing their contents to the drenching rain.

Fortunately, none of the instruments were damaged, though every member of the party suffered more or less loss of private property.

Another storm, the succeeding midnight, blew over one tent and damaged others, but its duration was, happily, only a few minutes.

Damages having been repaired as far as possible, observations were resumed August 7, and continued as the weather would admit till the 23d, seven primary and fourteen tertiary objects having been observed.

On August 25 the camp and instruments were moved to Meyer, an interior station in the quadrilateral Adams-Clark-Reinhard-Zean Dale. By the 28th the station was ready for observations, which were continued with but little interruption till they were completed, September 6. Four primary and six tertiary objects were observed.

Station Zean Dale, Riley County, was next occupied. Between September 11 and October 6 six primary and seven tertiary objects were observed, and an observing tripod and scaffold signal, forty feet in height, was put up at the advanced station Taylor.

On October 10 the camp equipment and instruments were hauled across the country to station Reinhard, in Morris County. This point is situated at the summit of a large rolling prairie, and is nearly midway between Dwight, a station on the Chicago, Kansas and Nebraska Railroad, and Moss Springs post-office, three miles to the northeast. The locality is one well known in the vicinity, attention having been called to it by the discovery of natural gas from a well bored near Mr. Reinhard's house.

Seven primary and nine tertiary objects were observed from this station, and work was finished here November 3.

The party was then transferred to White City, Morris County. While the station was being prepared for occupation the country round about was visited on November 8 by a phenomenal snow-storm which lasted for forty-eight hours, nearly twenty inches of snow falling.

On the 10th of November observations of horizontal and vertical angles were begun. Those for vertical angles, while they were interesting as showing the changes in refraction which took place from day to day as the snow gradually disappeared, can not be relied upon for differences of heights. The horizontal measures, however, were completed, three primary and ten tertiary objects having been observed.

After finishing work at White City station, November 22, field operations were discontinued for the season, and the instruments and camp equipage stored at Junction City.

Subassistant F. H. Parsons was attached to the party; he made the observations for time and latitude at station Adams and measured most of the double zenith distances taken during the season, besides reading one microscope of the theodolite during the observations. Mr. F. A. Pulizzi served as recorder, and Mr. A. P. Barnard assisted in recording, reading microscopes and general office work, and had charge of signal building and camp movements.

The statistics of the work from July 1 till its close are:

Triangulation:

| | |
|---|---|
| Area of triangulation in square statute miles | 770 |
| Number of stations occupied for horizontal measures | 6 |
| Number of stations occupied for vertical measures | 6 |
| Geographical positions, determined number of | 20 |
| Elevations determined trigonometrically, number of | 14 |

Latitude, longitude, and azimuth work:

| | |
|---|---|
| Number of pairs of stars observed for latitude | 20 |
| Average number of observations on a pair | 6 |
| Number of nights of observations for azimuth | 5 |

During the winter and spring Mr. Granger was engaged in office work, and toward the end of June was instructed to resume field operations on the transcontinental triangulation in Kansas as soon as funds for that work should become available.

## SECTION XVI.

NEVADA, UTAH, COLORADO, ARIZONA, AND NEW MEXICO. (SKETCHES Nos. 2, 15, 16, 17, and 18.)

*Occupation of stations for the extension to the eastward in Utah of the primary triangulation near the thirty-ninth parallel.*—In continuation of his work of the previous years, and acting under instructions dated June 26, 1888, Assistant William Eimbeck began all preparations needful for the occupation of Ogden Peak, Utah, one of the principal stations of the triangulation spanning the Great Salt Lake.

Upon reaching Salt Lake City, July 26, he entered at once upon active field service by erecting signals at City Creek, Antelope, Ogden Observatory, and North Ogden stations, by transferring camp equipage and instruments from Salt Lake City to the eastern flank of the mountain, by locating and laying out a pack trail five miles long from the end of the wagon road to the top of the Peak, which has an elevation above sea-level of about 9,600 feet, by transporting the instruments and equipments to the top, and by instructing, fitting out, and dispatching six parties of heliotropers to their distant mountain stations.

The preparation of the station, the mounting of the instruments and their adjustment, occupied Mr. Eimbeck personally, the two officers assigned to his party, Subassistants E. L. Taney and J. H. Turner, not having been able to join him before the end of August.

Observations were begun early in September, and were brought to a satisfactory conclusion on the 15th of the next month, some interruption having been occasioned by the equinoctial storms which swept over that entire section of the country during the first three days of October.

Included in the work accomplished, besides the usual extensive series of primary and secondary horizontal directions and double-zenith distance observations, were determinations of the astronomical latitude, a primary astronomical azimuth, a complete series of determinations of the magnetic declination, dip, and intensity, and a somewhat more extended topographical survey of the mountain than was needed for a mere description of the station, this survey having been undertaken and carried through in order to obtain local data for a more detailed study of conditions affecting the deflection of the plumb-line.

Nine primary directions were observed at Ogden, all of the longer lines, six in number, upon heliotropes; the remainder upon the large target signals, which Mr. Eimbeck has used for some years past, and in regard to which he remarks that in point of visibility under the ordinary conditions of the atmosphere in summer they excel every other form of opaque signal he has tried, exhibiting no phase. They are also simple and economical in construction.

The secondary directions observed were numerous, and included all of the principal mountain peaks visible within a circuit of about eighty miles radius. As a rule, these points were marked by a stone monument or cairn of adequate size, and resembling in shape the frustum of a cone. They were observed with precision in two, three, or more positions of the theodolite, and when ultimately fully determined will constitute an extensive series of well-established second order points, which will doubtless prove of great value in connection with the execution of subsidiary surveys.

Included in the hypsometric work at Ogden Peak, were included not only all the primary and secondary points, but likewise the permanent bench-marks which had been established at Ogden Observatory and the public square of Huntsville. These bench-marks were subsequently connected with the triangulation, and the observatory bench-mark was referred by spirit-leveling to the railway levels at Ogden. All primary zenith distances determined were made to depend upon observations taken during the middle part of the day, or the hours of least refraction, for ten days or more. Observations were made also during the early and late hours of the day, and systematically carried out in order to ascertain the average range of the refraction in the higher levels of the atmosphere. To get full data for study of the fluctuations of the refraction, the temperature, pressure, humidity, and direction and relative force of the wind were noted and recorded at all of the principal stations, the heliotropers having been furnished for the purpose with the necessary blank forms, directions how to observe, and instruments.

For latitude, twenty-three pairs of stars were observed on six different nights, special regard being paid in the selection of the stars to the accuracy of determination of their mean places.

For azimuth, satisfactory observations were obtained on five different days on Polaris near its eastern and western elongations in the same twenty-three positions of the theodolite used in observations of horizontal directions. Mr. Eimbeck remarks that the plan of observing a single close circumpolar star in opposite positions of its path, which with the larger instruments may be conveniently done by distributing the observations evenly over the early morning and late evening hours, admits of great expedition, and assures a final result for azimuth which is essentially free from the effects of the slight errors with which the tabular co-ordinates of these stars are usually affected.

The magnetic station, established within about thirty metres of the triangulation station, was occupied on five different days, and acceptable results were obtained for declination, dip, and intensity, the line of true north being specially determined by observations of the sun.

At the end of October the instruments and camp equipages were conveyed down the mountain, transferred to Salt Lake City, and there stored for the winter. Mr. Eimbeck then disbanded his party, retaining only such help as was needed to run a line of levels of precision, of about ten miles in length, for the purpose of connecting the bench-mark established last year at Hooper, near the shore of Great Salt Lake, with the transcontinental railway levels at Ogden, and thus obtaining a first approximate check on the hypsometric work of the triangulation as brought eastward from the Pacific coast, a distance of nearly six hundred miles. The Hooper bench-mark having been referred to a similar permanent bench-mark at Grantsville, Utah, by means of the level of the lake, and the Grantsville bench referred trigonometrically to the triangulation station at Mount Deseret, this central station of the great quadrilateral, Pilot Peak-Ibapah-Mount Nebo-Ogden Peak, stands connected with the transcontinental railroad levels at Ogden City. Permanent bench-marks for future reference and ultimate connection with the transcontinental line of precise leveling were established upon the abutment piers of the iron bridge of the Utah Central Railway across Weber River, near Ogden.

The field work of the season was brought to a conclusion finally by connecting trigonometrically the telegraphic longitude stations of the Survey at Ogden and at Salt Lake with the main triangulation, and by establishing a meridian line within the grounds of the Deseret University at Salt Lake City. This line was laid down at the request of the Surveyor General of Utah, with the approval of the Superintendent, the cost of labor and material being defrayed by the Surveyor-General. Owing to the character of its site and surroundings it will be well adapted for testing the surveyors' compasses used in the Government land surveys.

Mr. Eimbeck acknowledges the very acceptable and faithful aid received from Subassistants Taney and Turner, particularly the latter. Mr. Turner, at the close of the season, proceeded under instructions to San Francisco, and was subsequently ordered to take charge of one of the parties fitting out for the Alaska Boundary Survey.

During the winter Mr. Eimbeck was engaged at the office in Washington, D. C., in the reduction and discussion of the results of his season's work, with the aid of Subassistant Isaac Winston.

In the spring he was instructed to make preparations for resuming field work in Utah. These instructions contemplated the closing of the great quadrilateral by the occupation of stations Pilot Peak and Ibapah. In pursuance of this duty, he left Washington, May 17, and upon arrival at Salt Lake made arrangements for the transfer of his instruments and camp equipage to Tecoma, a station on the Central Pacific Railroad, about thirty-five miles north of Pilot Peak. From Tecoma, the location and construction of roads and a pack-trail to the summit of the Peak, an elevation of about ten thousand nine hundred feet, occupied the party till the end of the fiscal year. The unusually rocky and inaccessible character of the Peak presented formidable obstacles to rapid progress.

Further account of Mr. Eimbeck's work will appear in the next Annual Report.

*Determinations of the magnetic elements at stations in Colorado and New Mexico.*—Three stations in Colorado and four in New Mexico were occupied by Assistant Jas. B. Baylor between October 23 and November 26, 1888, for the determination of the magnetic elements.

At West Las Animas, Colo., a station was established a short distance from the station of 1878, which was no longer available, the true north being determined by observations of the sun on one day, and the magnetic elements on one day.

At Denver, Colo., new buildings had been erected over the station of 1878; a new station was selected, therefore, and established in the grounds of the State Capitol. Two days were occupied in magnetic observations and one in determining the line of true north.

At North Pueblo, Colo., the station had to be shifted from that of 1878 on account of some obstructions. One day was given to magnetic observations, and one to fixing the line of true north.

A station was established at Trinidad, Colo., in the grounds of the High School, just across the street from the Coast and Geodetic Survey astronomical station of 1873. Magnetic observations were made on one day, and observations on the sun for azimuth on one day.

At Fort Union, N. Mex., on November 11, a station was selected about twenty-nine yards from the astronomical station occupied by Lieut. G. M. Wheeler, U. S. Engineers, in 1873. Two days were given to magnetic observations, and one to determining the true north line.

A station was established at Albuquerque, N. Mex., 51.5 feet due south of the pier used by the Geological Survey at that place, two days being taken for magnetic work, and one for the line of true north.

At Fort Craig, N. Mex., the station of Lieutenant Wheeler of 1873 was occupied during two days for similar determinations.

At Deming, N. Mex., a station was established south of Wells, Fargo & Co.'s express office in the open field south of the Union Pacific Railroad. Latitude was determined at this station by observations of the sun on one day, the true north on one day, and the magnetic elements on one day.

Other stations occupied by Mr. Baylor for magnetic work are named under headings in Sections VIII, IX, XIII, XIV, and XV.

*Exchanges of telegraphic signals for the determination of the longitude of Verdi, Nevada.*—In connection with the general account of the operations of the longitude parties under a heading in Section X, reference was made to the closing determination of the fiscal year, that of the line Sacramento, Cal., Verdi, Nev., the observers being Assistant C. H. Sinclair and Subassistant R. A. Marr, and the first series of exchanges having been obtained June 24, 25, 28, and 29, with Mr. Sinclair at Sacramento and Mr. Marr at Verdi, and the second series July 1, 2, 3, and 4, 1889, after change of places by the observers.

Other longitude stations occupied by these officers are referred to under headings in Sections XI and XVII.

## SECTION XVII.

IDAHO, WYOMING, AND MONTANA. (SKETCHES Nos. 2, 17, and 18.)

*Exchanges of telegraphic signals for the determination of the longitude of Helena, Montana.*—Reference has been made under a heading in Section XI to the selection of a longitude station at Helena, Mont., and to its occupation for the determination of longitude by exchanges of telegraphic signals with the station at Walla Walla, Wash., Assistant Edwin Smith having charge of operations at Walla Walla, and Subassistant R. A. Marr at Helena. Successful exchanges of signals were obtained on five nights between August 25 and 29, 1888, in the first position of the observers, and after they changed places five more exchanges were made between September 1 and 7, completing the determination.

Mr. Smith reports that the two new portable transit instruments which were constructed at the office proved to be very satisfactory both as regards stability of position and steadiness of value of the instrumental constants. He recommends some slight modifications, which were suggested by actual trial of the transits in the field.

After the line Helena–Walla Walla had been finished, Assistant Smith was relieved at his own request, and Assistant C. H. Sinclair ordered to take charge of his party.

The determination of the line Helena, Mont., Spokane Falls, Wash., which was next taken up, has been reported under a heading in Section XI.

Other longitude determinations made by Messrs. Sinclair and Marr are referred to under headings in Sections X and XVI.

## SPECIAL OPERATIONS.

*Survey for the Commission appointed to select a site for a Navy Yard on the Gulf of Mexico and South Atlantic Coasts.*—The officers of the Survey on duty on the South Atlantic and Gulf of Mexico coasts in the winter of 1888–'89, were specially instructed to co-operate with the Naval Commission appointed to select a site for a Navy Yard on those coasts, and to make such surveys as the Commission might request. The members of the Commission were Commodore W. P. McCann, U. S. N., Capt. Robert Boyd, U. S. N., and Lieut. Commander W. H. Brownson, U. S. N.

Towards the end of April, 1889, Subassistant P. A. Welker took up, under instructions issued at the request of the Commission, a survey of Escambia Bay, Fla. A base-line 776.97 metres long (2,549 feet) having been measured with a steel tape along the line of the Pensacola and Atlantic Railroad, signals were erected and their positions and those of other prominent objects were determined by a plane table triangulation. Signals for hydrographic purposes were located as far down the Bay as Magnolia Bluff, four and a half miles south of Devil's Point. A complete topographical survey was made on a scale of 1–5000. Contours were run every five feet up to the twenty-foot curve, after that they were run every twenty feet. All of the contour lines were run accurately with a Y-level. By May 16, the topography was finished, and in a few days, as soon as the steam-launch tendered for the use of the party by the commandant of the Pensacola Navy Yard could be got ready, the hydrography was begun. Up to June 13, when it was completed, delays had occurred owing to rough water and fresh southwest or southeast winds.

The results of this survey were shown on one hydrographic sheet, scale 1–5000, a tracing of which was furnished to the President of the Commission.

Mr. Welker reports the following statistics of the Escambia Bay work:

| | |
|---|---|
| Topography: | |
| Number of miles of shore-line surveyed | 3 |
| Number of miles of railroads and other roads surveyed | 6 |
| Number of miles of creeks and fences surveyed | 7 |
| Approximate area surveyed in square miles | 2 |
| Hydrography: | |
| Area of hydrography in square miles (approximate) | 3 |
| Number of miles run while sounding | 290 |
| Number of angles measured | 3,544 |
| Number of soundings | 33,424 |
| Number of specimens of bottom preserved | 11 |
| Number of borings made for obtaining the character of the bottom | 8 |

*Survey for the Commission organized to select a site for a Navy Yard on the Pacific Coast, north of the forty-second parallel of north latitude.*—In order to carry out instructions issued towards the end of March, 1889, Assistant J. F. Pratt began preparations to put the schooner *Yukon*, and steam-launch No. 26 in readiness for the use of his party in making a special survey on a scale of 1–5000 of the site selected for a Navy Yard by the Pacific Coast Commission, appointed to examine that coast north of the forty-second parallel of north latitude in the State of Oregon and the Territories of Washington and Alaska for the purpose of selecting such a site. The Commission, the members of which were Capt. A. T. Mahan, U. S. N., Commander C. M. Chester, U. S. N., and Lieut. Commander C. H. Stockton, U. S. N., after an exhaustive examination had selected Port Orchard, Puget Sound, Wash. as the most suitable site for a Navy Yard.

Mr. Pratt arrived on the working ground May 11, and, having made the needed triangulation, including that required for the water frontage on Sinclair's Inlet, he pushed forward the topography and hydrography, and by the end of the fiscal year had finished the survey, with the exception of the interior topography in the rear of the site.

The results will be shown in two sheets of combined topography and hydrography on a scale of 1-5000, a tracing of which is to be furnished to the President of the Commission.

Following are the statistics of this work up to June 30, 1889:

| | |
|---|---|
| Triangulation: | |
| Area in square statute miles | 3 |
| Number of signal poles erected | 14 |
| Number of geographical positions determined | 10 |
| Topography: | |
| Area surveyed in square statute miles | 2 |
| Length of general coast line in statute miles | 20 |
| Hydrography: | |
| Number of miles run in sounding | 17 |
| Number of soundings | 1,920 |

*Organization of parties to make a preliminary determination of the boundary line between Alaska and British Columbia.*—The Sundry Civil Expenses Act, approved October 2, 1888, having contained a clause making an appropriation to defray the cost of carrying on a preliminary survey of the frontier line between Alaska and British Columbia, in accordance with plans or projects approved by the Secretary of State, arrangements were made by the Superintendent for the detail of two officers of the Survey, who should have charge of parties for the execution of the work, and who should be occupied during the winter in a careful study of the methods of transportation and instrumental outfit and general equipment needed to maintain an effective organization for a period of twelve or sixteen months in the field.

The general character of the survey to be made by these officers is indicated in the following project, approved by the Secretary of State:

"A plan or project for accurately and permanently locating in latitude and longitude points in southeastern Alaska for the determination of a line not to exceed a distance of ten marine leagues from the coast line; said points to be accessible respectively by the Portland Canal, the Stikine River, the Taku River, and the Chilcat and Chilcoot Rivers, with such other points as may be found to be accessible by the Coast Survey parties in southeastern Alaska; and also points on the Yukon and Porcupine Rivers at or near the 141st meridian of west longitude, and such other accessible points along or near said meridian as it may be deemed by the Superintendent of the Coast and Geodetic Survey advisable to so locate; such points to be marked by such permanent marks or monuments as may be available; and that in the vicinity of such points such rapid topographical reconnaissance or work shall be done as may be practicable and as may serve to identify and reasonably delineate the characteristics of the country, so as to enable a boundary commission, or other negotiators of a boundary treaty, to agree upon a boundary of straight or other intelligible and easily described lines. The results of the field-work thus outlined to be reduced and made available for use in the definition and adjustment of the boundary by publication in proper and convenient map or maps, supplemented by such report by the Superintendent of the Coast and Geodetic Survey as may be necessary to explain any points not rendered clearly apparent by such map or maps."

By instructions issued in the winter of 1888, supplemented by detailed instructions in the spring of 1889, Subassistant J. E. McGrath and Subassistant J. H. Turner were directed to organize parties prepared to start for Alaska at the earliest date that arrangements could be made for their transportation. This was finally provided for by contract with the Alaska Commercial Company. By the terms of this contract, which was signed May 7, 1889, and made through the agency of Lieut. Commander H. E. Nichols, U. S. N., acting as the representative of the Survey, the company agreed to transport the parties of the Survey, their outfit, equipment, baggage, instruments, and general freight from San Francisco by way of the Pacific Ocean, Bering Sea, and the Yukon and Porcupine Rivers to their desired destinations, or as near to them as the utmost diligence on the part of the company and the means of transportation at its command would render practicable.

During the fitting out of the parties at San Francisco, Assistant Davidson rendered to Messrs. McGrath and Turner all of the assistance which his experience could give in the examination of instruments, in methods of observing and in actual practice in the observatory, and at the request of the Superintendent he prepared a paper embodying his views as to the methods for inaugurating the proposed boundary survey.

All arrangements having been completed, the parties left San Francisco in the Alaska Commercial Company's steamer *Bertha* on June 15, and on the 27th of that month arrived at Iliulink, Unalaska Island, where they were transferred to the steamer *St. Paul*, bound for St. Michael's, Norton Sound.

It is hoped that when communication shall have been re-opened with Alaska in the summer and autumn of 1890, favorable accounts of progress in their arduous labors will be received from these officers.

*Centennial Exposition of the Ohio Valley and Central States.*—The exhibit of the Coast and Geodetic Survey at the Centennial Exposition of the Ohio Valley and Central States, held in Cincinnati from July till November, 1888, was placed in charge of Assistant C. O. Boutelle, aided by Dr. J. J. Clark, of the Office of Weights and Measures.

This industrial exposition was the largest and most varied in character that had been held in the United States since that of 1876 in Philadelphia, and the contribution of the Government to it was in some departments more extensive than that made in 1876.

Assistant Boutelle devoted the month of June to the preparation of the articles forming the exhibit of the Survey, and to the compilation of a pamphlet describing them. One thousand copies of this pamphlet were distributed gratuitously to applicants at the Exposition.

The space accorded to the entire exhibit of the Government was far short of that required for a proper development of the numerous objects, useful both in peace and in war, which were sent to Cincinnati. Their aggregate value was estimated at over one million five hundred thousand dollars. Of the space allotted to the Treasury Department, the Coast and Geodetic Survey received nearly one-half, or 750 square feet. This area was entirely filled by the apparatus, instruments, and publications exhibited, and they attracted so much attention and inquiry as to demand the constant and close attendance of two persons from 9 in the morning till 6 in the evening.

After having arranged all the details of the exhibit, Assistant Boutelle, on the 1st of August, turned over the charge of it to Dr. Clark, by whom he had been so ably assisted, and, under instructions, resumed his duties in the immediate direction of the State surveys.

## COAST AND GEODETIC SURVEY OFFICE.

The assignment of Assistant B. A. Colonna to duty in charge of the Office and Topography was continued throughout the year. His annual report (Appendix No. 4) is accompanied by reports from the chiefs of the several Office Divisions, the Computing, Drawing, Engraving, Instrument, Tidal, Miscellaneous, and Chart Divisions, the Library and Archives, the Accounting Division, and the Office of Weights and Measures.

Referring to the great and steadily increasing demands for the charts and other publications of the Survey, Mr. Colonna calls attention to the fact that all of these demands have been promptly met by increased labor on the part of the office force, except for a period during the summer, when, notwithstanding the utmost efforts of the plate printers, who worked full hours without leave of absence, the presses could not fully satisfy the requests from sale agents for charts. He urges, therefore, the need of additional space and two more presses, as well as force to work them. In fact, to enable the office to utilize fully the valuable material for publication now in its possession, he states emphatically the need of increasing its capacity by the employment of additional computers, draughtsmen, engravers, printers, mechanicians, laborers, and writers, and the need also of the additional office room that they will require.

Mr. Colonna refers to the thorough vindication of Mr. W. B. Morgan, Disbursing Agent of the Survey for several years preceding July, 1885, by the final settlement of his accounts, and by the action of the Secretary of the Treasury in practically revoking his suspension from duty and accepting his resignation.

He urges the need of the appointment of an official of the Survey to act as its Disbursing Agent, expresses his appreciation of the able support rendered to the Survey by the chiefs of the several office divisions and their subordinates, and refers to the cordial relations maintained with the Hydrographic Inspector and to his continued co-operation in official business.

In Appendix No. 2 are included the statistics of both office and field work of the Survey for the fiscal year, and in Appendix No. 3 appears a tabular statement of information furnished to departments or officers of the Government for official use, and to individuals upon application.

The charge of the Computing Division was continued with Assistant Charles A. Schott. He has distributed, supervised, and reported the work performed by each computer; answered the various calls upon his division for information, supplied the maps and charts of the Survey with the magnetic declination, and prepared a number of special reports relating to scientific matters. Some of the more important of these reports will appear as appendices to the present volume; they are referred to under the heading, "Special Scientific Work," in Part I.

Mr. Schott has, as heretofore, given special attention to the subject of terrestrial magnetism; he advanced the discussion of the secular variation of the magnetic declination, having collected and arranged the magnetic declinations at 3,200 stations, preparatory to the construction of an isogonic map of the United States for the epoch 1890. He prepared draughts of instructions for the parties assigned to the preliminary survey of the boundary line between Alaska and British Columbia, and gave professional testimony for the District of Columbia in a suit involving the precise location of the Kidwell Meadows. By appointment of the Civil Service Commission he acted as a member of the Board of Examiners for computing and for astronomy.

Details relating to the computations and to the work performed by each computer are given by Mr. Schott in his annual report.

The annual report of the Drawing Division is submitted by Assistant W. H. Dennis, who was assigned to its charge May 1, 1889, succeeding Assistant E. Hergesheimer, whose death took place April 23. The great loss sustained by the Survey by this sad event is referred to by the Assistant in charge of the Office in his annual report. Not less skilled as a topographer than as a draughtsman, and thoroughly versed in every branch of his profession, Mr. Hergesheimer was specially qualified for the duties of his responsible post.

Mr. Dennis observes that, owing to the short time the Division had been under his direction at the date of submitting his annual report, the statements he presents are mostly statistical in their character, and that the assignment of work was virtually the same as during the preceding fiscal year.

Appended to his report is a table showing the number of drawings of charts to be reproduced by photolithography which were completed during the fiscal year; the number of drawings of new editions of charts so published; the number of drawings of charts completed for photolithographs, but not published for lack of funds; the number of drawings of charts to be engraved which were finished and the charts published, and of drawings of new editions of charts which were finished and the charts published from engraved plates, and also the number of drawings of charts completed for the use of the engravers. A tabular statement is also presented giving the titles of the large number of charts to the drawings of which additions or corrections were made during the year, with the names of the draughtsmen engaged upon them.

Assistant Herbert G. Ogden has continued in charge of the Engraving Division, with which is combined the direction of the electrotyping and photographing and printing rooms. He reports fifteen new charts published during the year from engravings on copper, and eight new editions of charts. The engraving of nine new charts and nine plates of new editions of charts was begun. Work upon fourteen engraved plates of new charts and upon five plates of new editions of charts was continued. Six hundred and seventy engraved plates of charts were corrected before being sent to the printing room.

In the electrotyping and photographing rooms, thirty-six altos and forty-eight bassos were made; also two hundred and seventy-four negatives for photographic reductions and seven hundred and ten blue prints.

The printers took thirty-nine thousand seven hundred and fifty-four impressions of charts from seven hundred and ninety-two plates.

Mr. Ogden repeats recommendations made by him in previous reports for an increase in the force of engravers and printers, and gives in detail the reasons for his recommendations. These reasons have additional weight, as each year brings increased demands for the charts of the Survey, as the number of plates requiring corrections of aids to navigation increases each year, and as the number of engravers needed to keep the corrections and changes on the plates up to date must be increased also.

Mr. Ogden alludes to the improvements introduced into the processes of electrotyping and photographing through the skill and experience of Mr. D. C. Chapman. He observes that the system of mounting photograph reductions to scale recently introduced is proving more valuable with each new trial. Mr. Chapman has succeded in preserving the curvature of the projections in reducing to small scale, and can now make as perfect a reduction from a printed chart with distorted projection as could formerly be made from an accurate drawing.

Mr. F. Moore continued to serve as foreman of printing. Mr. J. H. Smoot has performed the duties of clerk to the Division in a manner highly satisfactory to his chief. The assignment of another book-keeper is required, Mr. Ogden states, to enable Mr. Smoot to give more time to his important duties of proof-reading and verification.

The usual list of chart plates completed, continued, and commenced during the year is appended to the report.

Assistant Andrew Braid has remained in charge of the Instrument Division, Mr. E. G. Fischer continuing to serve as chief mechanician, and giving his personal attention to the details of work in the instrument shop.

Mr. Braid submits a list showing quite a large number of new instruments completed or in course of construction during the year; among them six eight-inch repeating theodolites, graduated to five minutes of arc and reading by three verniers to five seconds. Great care was taken in the construction of these theodolites to secure a high standard of accuracy, while at the same time the cost was kept within the amounts for which similar instruments could be had by purchase. In Appendix No. 9 to this volume appears a description of two new portable transit instruments constructed in 1888 for the longitude parties.

Detailed statements of the work performed by each instrument-maker are given by Mr. Braid in his report. He mentions improved equipment introduced into the instrument shop during the year, and states that two additional mechanicians are greatly needed.

Mr. H. O. French continued to serve as chief carpenter. The duties of property clerk were performed by Mr. R. C. Glascock.

Mr. A. S. Christie, in charge of the Tidal Division, in addition to his usual duties of supervision and revision of work, preparation of Tide Tables, etc., gave special attention to a collation, comparison, and adjustment of all tidal data available relating to the Atlantic coast from the Strait of Belle Isle to Biloxi, and to the Pacific coast from southern California to the Aleutian Islands. The results of this investigation were incorporated in the Tide Tables for the Atlantic and Pacific coasts for 1890; the manuscripts were sent to the printer before the end of the fiscal year, to be published in two volumes, large octavo.

Both of these volumes were enlarged, the one for the Atlantic coast having been extended to include two hundred and six subordinate stations on the east coast of British America as far as the Strait of Belle Isle, and that for the Pacific coast made to include eighty-five subordinate stations in British Columbia. The number of stations in Alaska was increased from twenty-two to thirty-three, and full predictions were made for Sitka and St. Paul, Kadiak Island, as principal stations for the first time.

The usual tidal notes were prepared for publication on the charts and in the Coast Pilot volumes; descriptions of tidal bench-marks and other tidal data were furnished for the use of field parties, and information relating to tides was supplied in response to requests, official and personal.

The annual report of the Miscellaneous Division is submitted by Mr. M. W. Wines, general Office Assistant. He reports the number of charts sent to agents for sale during the year as twenty-six thousand six hundred and seventy-six; the number of annual reports distributed, two

thousand three hundred and ninety-five; the number of copies of Tide Tables issued three thousand three hundred and eight; the number of volumes of Coast Pilots issued, including sub-volumes, four hundred and ninety-five.

Reference is made by Mr. Wines to the increase in the demand for charts by mariners and others who actually use them in navigation, two thousand four hundred and three more copies having been sent out to meet requests from sale agents than during the preceding fiscal year. This number was not enough to supply the demand, but it was as many as the means afforded by the appropriations would admit of. During the past four years the issue of charts to sale agents has increased nearly one hundred per cent.

Distribution was made as usual of the Annual Reports, the appendices thereto printed separately, the Bulletins and the Notices to Mariners. Mr. Wines includes in his report statements of new publications issued and the number of each received from the printer during the year; of new publications sent to press, and of the distribution of the Annual Reports. He commends the services of Mr. Freeman R. Green, whose clerical work has been highly satisfactory.

On the 1st of May, 1889, Assistant Gershom Bradford was assigned to the charge of the Chart Division, relieving Assistant W. H. Dennis.

All charts issued come from the printer to this Division for correction of aids to navigation, the coloring of lights and buoys and of light-sectors, and for stamping with the date of correction. Naval vessels and branch hydrographic offices of the Navy are now supplied with the charts which pass through the Office directly from this Division, instead of being supplied as formerly in bulk through the Hydrographic Office of the Navy Department.

Thirteen new charts from engraved plates were added to the Chart Catalogue during the year; also thirty-six charts reproduced by photolithography. Mr. Bradford gives the titles of these new charts in his report, and furnishes a tabular statement of the yearly receipt, issue, and general distribution of charts.

Mr. Artemas Martin was continued in charge of the Archives and Library, and presents in his annual report the usual statements of the receipt and registry of original and duplicate records, computations, and of hydrographic and topographic sheets. Also of the books and pamphlets received in the Library during the fiscal year.

A card catalogue of the bound books in the Library was completed. Mr. J. M. Duesberry served as clerk during the year.

The annual report of Mr. John W. Parsons, who, as Accountant in charge of the Accounting Division, is the representative of Mr. George A. Bartlett, Disbursing Clerk of the Treasury Department, and who has immediate charge of the books and accounts of the Survey, indicates close attention to the examination and adjustment of the thousands of accounts passing through the Division, and an exactness and efficiency in methods of business which are highly commendable.

On June 11, 12, and 13, 1889, the annual examination of the accounts of the Survey by a special committee of the Department, under orders from the Secretary of the Treasury, took place, every item of appropriation and expenditure being proved and every balance checked. The results of this examination were perfectly satisfactory to the committee, and were so reported to the Secretary.

Mr. E. B. Wills served as Accountant until May, 1889, when he was transferred to the Office of the Assistant in charge. Mr. W. H. Lanman rendered faithful and intelligent service during the year as general book-keeper. Mrs. S. B. Taliaferro aided in clerical details till October 15, 1888, when she was transferred to the Sixth Auditor's Office. Miss Paula E. Smith served acceptably as general clerk during the year.

The Office of Weights and Measures has been continued in charge of Assistant O. H. Tittmann, under whose direction the means available for the construction and comparison of the standards of weight and measure have been largely added to, and investigations conducted which have brought into closer relation the metric standards of the Coast and Geodetic Survey and of the Lake Survey.

Dr. J. J. Clark served as verifier and adjuster during the year, with the exception of the period between July 1 and November 22, when he was on duty with the exhibit of the Survey at Cincinnati.

With the aid of Subassistant F. H. Parsons, who was attached to the Weights and Measures Office between April 13 and June 30, the records and papers on file have been thoroughly systematized, and a card catalogue of observations and computations prepared.

Other officers who rendered acceptable service during brief assignments were Assistants A. T. Mosman, F. D. Granger, and John B. Weir.

Mr. Tittmann gave his personal supervision to the construction of a comparing vault and of a comparator capable of comparing either line or end measures up to six metres in length. This vault will be tested under widely different conditions of temperature and for different classes of work, and will then be made the subject of a special report.

Under the immediate direction of the Assistant in charge, in the Office Division, the following-named persons have been employed:

Dr. William B. French has continued to act as the immediate assistant of the Assistant in charge in matters of executive detail. He has had special charge of the adjustment and settlement of Office accounts, and it is worthy of note that an examination of his books after a period of three years and a half, completed in April, 1889, showed a difference of but two cents in the final balance.

Mr. R. M. Harvey served as file clerk. Miss S. C. Ayres was engaged on Office correspondence till her transfer in November to the Pension Office. Miss F. B. Bailey, Miss K. Lawn, and Miss F. Cadel rendered faithful and efficient service as stenographers or type-writers during the year. Miss C. B. Turnbull and Mrs. J. Wadill were employed as copyists; also Mr. Neil Bryant since October 1, 1888.

In the Office of the Superintendent Mr. W. B. Chilton continued to serve as clerk. During part of the year he aided in the arrangement of manuscript and in the proof-reading of the fourth edition of the Pacific Coast Pilot.

## SUB-OFFICES, U. S. COAST AND GEODETIC SURVEY.

*Sub-office at Philadelphia.*—The sub-office of the Survey at Philadelphia was maintained throughout the year in charge of Assistant S. C. McCorkle.

Information was supplied in response to requests from the following-named Government organizations or officials: The U. S. Geological Survey; the United States Light-House Inspector, Fourth District; the U. S. Corps of Engineers; the United States Advisory Commission for the Port of Philadelphia, and the United States Commission to examine the League Island Navy-Yard. Also to the following-named local organizations: The Philadelphia Maritime Exchange, the Engineers' Club, the Bureau of Surveys, the Historical Society of Pennsylvania, and the Office of the City Ice Boats.

Assistants R. Meade Bache, H. L. Marindin, and C. M. Bache availed themselves of the facilities afforded by the sub-office at various periods during the year.

Mr. McCorkle served as a member of the Commission advisory to the Harbor Commission of Philadelphia from August 21 until the Commission was dissolved by order of the President of the United States, February 25, 1889. His service in relation to the observation of the movement and lodgment of ice in Delaware River and Bay during the winter of 1888–'89 has been referred to under a heading in Section II.

*Sub-office at San Francisco.*—Assistant George Davidson, in addition to the duties involved in the general charge of the land parties upon the Pacific coast, and already referred to, has continued in charge of the Sub-office of the Survey at San Francisco, and has answered all calls for information, whether from officers in the field or from organizations or persons outside of the Survey.

In the matter of the examination of the boundary-line between California and Nevada, ordered by the State of California, Mr. Davidson kept the Superintendent fully advised of all data pertaining thereto, and communicated all information in possession of the Sub-office to the Surveyor-General of California. He also conferred personally with the Surveyor-General and his deputies in relation thereto.

He assisted the United States Quarantine Commission by communicating to them his views relative to the San Francisco and San Diego sites, and by supplying the members with charts, etc.

The Chamber of Commerce of San Francisco took occasion to express its sense of Mr. Davidson's public services by electing him its first honorary member.

Mr. Ferdinand Westdahl served as draughtsman in the Sub-office and was assigned to duty for four months in Mr. Davidson's party engaged in the measurement of the Los Angeles Base.

Mr. Frank W. Edmonds was attached to the Sub-office as Clerk, and for four months rendered service as recorder on the Los Angeles Base. Vicente Denis served faithfully as heretofore for many years, having the care of instruments and camp equipage and doing duty as messenger and porter.

CONCLUSION.

Under the direction of the Superintendent the following-named officers have been specially employed: Assistant Charles S. Peirce in the reduction and discussion of his pendulum observations; Assistant Charles O. Boutelle in the immediate direction of State Surveys, involving the preparation of instructions for and the correspondence with Acting Assistants, and the personal inspection and charge of field operations whenever required; Assistant E. D. Preston in the preparation for publication of papers and reports embodying the results of his determinations of latitude and gravity in the Hawaiian Islands, in San Francisco, and in Washington, D. C., and Assistant Edward Goodfellow in the preparation for publication and the editing of the Annual Reports and the Bulletins of the Survey.

During the year Mr. Charles Junken was specially employed as a civilian expert to compile data and deduce results from recent surveys in southeastern Alaska in order to prepare a map which should become available for exhibiting the preliminary survey of the boundary between Alaska and British Columbia now in progress under act of Congress.

Mr. Junken was temporarily aided in this work by Assistant Gershom Bradford. He has submitted a full report of the results which he had reached at the end of the fiscal year.

In transmiting to the Department this report of the progress and state of the Survey for the fiscal year 1889, during which it was under the direction of my predecessor, it is not my intention to recommend at present any marked changes in the scope of the work or in the methods hitherto adopted for its development.

An examination of the scheme of operations outlined in the Report will show that the Survey has been prompt to recognize the larger requirements of navigation on both the Atlantic and Pacific coasts, the expansion of its work demanded by the acquisition of new territory, and the need of rapid preliminary surveys to meet the wants of trade and commerce where the development of these interests has been so unprecedented as on the coasts of California, Oregon, Washington, and Alaska. It will show also that while the importance of this branch of the work has been kept closely in view and its results presented to the public by Charts, Coast Pilots, Notices to Mariners, and Tide Tables, ample recognition has been given to the demands of geodetic science by extensions of lines of leveling of precision, and lines of telegraphic longitude determinations; by investigations in terrestrial magnetism; by the measurement of arcs of the meridian and parallel; by determinations of local deflection of the plumb-line; by observations of the force of gravity, and by co-operation with the International Committee on Weights and Measures and with the International Geodetic Association to provide for standards of weight and measure of the highest attainable accuracy, and to establish, as far as practicable, upon a uniform basis the operations intended to determine the figure of the earth.

Respectfully submitted.

T. C. MENDENHALL,
*Superintendent.*

Hon. WILLIAM WINDOM,
*Secretary of the Treasury.*

# PART III.

# APPENDICES.

Blank page retained for pagination

# APPENDIX No. 1—1889.

## DISTRIBUTION OF THE PARTIES OF THE COAST AND GEODETIC SURVEY UPON THE ATLANTIC, GULF OF MEXICO, AND PACIFIC COASTS, AND IN THE INTERIOR OF THE UNITED STATES DURING THE FISCAL YEAR ENDING JUNE 30, 1889.

| Sections. | Parties. | Operations. | Persons conducting operations. | Localities of work. |
|---|---|---|---|---|
| SECTION I. | | | | |
| Maine, New Hampshire, Vermont, Massachusetts, and Rhode Island, including coast and seaports, bays and rivers. | No. 1 | Reconnaissance and triangulation. | C. H. Boyd, assistant; R. H. Bayard and E. C. Lyle, recorders. | Continuation of the triangulation of the St. Croix River, and of the lakes near its head towards the northeastern boundary. (See also Section VIII.) |
| | 2 | Topography ..... | C. M. Bache, assistant..... | Completion of the topographical survey of the west bank of the St. Croix River between Pleasant Point and Shortlands Station. |
| | 3 | Topography ..... | J. H. Gray, aid ..... | Topographical survey of the north branch of Cobscook Bay, Maine. (See also Section VI.) |
| | 4 | Hydrography ..... | Lieut. F. H. Crosby, U. S. N., assistant; Lieut. J. M. Helm, U. S. N., assistant: Ensigns R. O. Bitler, Joseph Strauss, and D. S. Nes, U. S. N.; Naval cadet Philip Andrews, U. S. N. | Completion of the hydrography of Cobscook Bay, Maine. (See also Section XI.) |
| | 5 | Topography ..... | Eugene Ellicott, assistant..... | Completion of the topographical survey of Cobscook Bay. (See also Section V.) |
| | 6 | Hydrographic examinations. | Lieut. J. E. Pillsbury, U. S. N., assistant; Ensigns R. M. Hughes, C. S. Stanworth, J. E. Shindel, and P. Andrews, U. S. N. | Hydrographic examinations on the coast of Maine in the vicinity of Nash Rock, and between Matinicus Rock and Seguin Island. Also off the coast of Massachusetts from Nantucket Shoals to the eastern limit of George's Bank. (See also Sections III and VI.) |
| | 7 | Physical hydrography. | Henry L. Marindin, assistant; E. E. Haskell and H. P. Ritter, expert observers. | Physical hydrography. Continuation of the survey of the coast of Cape Cod Peninsula from the vicinity of Chatham to the northward. |
| | 8 | Special survey.... | Henry L. Whiting, assistant; C. H. Van Orden, assistant. | Continuation of the determinations of town boundary lines in the State of Massachusetts. |
| | 9 | Topographical resurvey. | Henry L. Whiting, assistant ..... | Resurvey of the new inlet into Cotamy Bay, Martha's Vineyard. |
| | 10 | Supervision and inspection of topographical resurveys. | Henry L. Whiting, assistant ..... | Supervision and inspection of topographical resurveys on Martha's Vineyard, No Man's Land, Naushon, in the vicinity of Wood's Holl, and on the southeasterly part of Long Island. |
| | 11 | Topographical additions to original surveys. | Henry L. Whiting, assistant ..... | Additions of topographical details to the original surveys of Nantucket and Martha's Vineyard Islands. |
| | 12 | Hydrography.... | Lieut. J. M. Helm, U. S. N., assistant. | Hydrographic survey in Nantucket Sound. (See also Section XI.) |
| | 13 | Hydrography.... | Lieut. S. C. Paine, U. S. N., assistant: Ensigns L. M. Garrett, L. S. Van Duzer, Franklin Swift, W. R. M. Field, G. Evans, and R. D. Tisdale, U. S. N. | Hydrographic resurveys in Nantucket and Vineyard Sounds. |

## APPENDIX No. 1—Continued.

| Sections. | Parties. | Operations. | Persons conducting operations. | Localities of work. |
|---|---|---|---|---|
| SECTION I—Continued. | No. 14 | Hydrography | Lieut. J. F. Moser, U. S. N., assistant; Ensigns W. M. Constant, H. A. Bispham, J. E Shindel, W. H. G. Bullard, and S. M. Strite, U. S. N. | Hydrographic resurvey of the approaches to Martha's Vineyard and Nantucket, and resurvey of Muskeget Channel. (See also Sections VI and VII.) |
| | 15 | Hydrography | Lieut. W. P. Elliott, U. S. N., assistant; Ensigns L. S. Van Duzer and E. A. Anderson, U. S. N. | Hydrographic surveys and examinations in Nantucket and Vineyard Sounds. (See also Section II.) |
| | 16 | Topography | John W. Donn, assistant | Topographic resurvey of parts of the north and south shores of Martha's Vineyard. Also of the shore-line of No Man's Land. (See also Section III.) |
| | 17 | Topography | W. I. Vinal, assistant | Topographical resurvey of shore-line and adjacent details in Wood's Holl, and on the islands in its immediate vicinity. |
| | 18 | Topography | E. L. Taney, subassistant | Topographical resurvey of the Elizabeth Islands. (See also Section VIII.) |
| | 19 | Triangulation | A. T. Mosman, assistant | Determination of the geographical positions of light-houses in Narragansett Bay and approaches. (See also Sections II and VII.) |
| SECTION II. | | | | |
| Connecticut, New York, New Jersey, Pennsylvania, and Delaware, including coasts, bays, and rivers. | 1 | Triangulation | A. T. Mosman, assistant | Triangulation on the south coast of Long Island completed from Great South Bay to Napeague Bay. (See also Sections I and VII.) |
| | 2 | Topography | C. T. Iardella, assistant | Completion of the shore-line resurveys of Three Mile Harbor, Moriches Bay, and the outer beach, Long Island. |
| | 3 | Hydrographic examination. | J. Hergesheimer, assistant | Hydrographic examination of the entrance into Jamaica Bay, south side of Long Island. (See also Section VI.) |
| | 4 | Hydrography | Lieut. W. P. Elliott, U. S. N., assistant; Ensigns L. S. Van Duzer and E. A. Anderson, U. S. N. | Observation of currents in New York Lower Bay. (See also Section I.) |
| | 5 | Meridian lines and standards of length. | J. B. Baylor, assistant | Establishment of meridian lines and standards of length at Binghampton, N. Y., and at Montrose, Pa. (See also Sections VIII, IX, XIV, XV, and XVI.) |
| | 6 | Tidal observations. | J. G. Spalding, observer; D. E. Snead, observer. | Continuation of the tidal record by means of automatic tide-gauge at Sandy Hook, New Jersey. (See also Section V.) |
| | 7 | Geodetic operations. | F. Walley Perkins, assistant; Prof. L. H. Barnard, acting assistant. | Continuation of the triangulation in northeastern Pennsylvania required to complete the Pamplico-Chesapeake-Lake-Ontario arc of the meridian. (See also Section VIII.) |
| | 8 | Topography and hydrography. | R. Meade Bache, assistant; Neville B. Craig. | Corrections in and additions to the topographic and hydrographic surveys of the Delaware River, made necessary by changes which had occurred since former surveys. |
| | 9 | Topography and hydrography. | J. Hergesheimer, assistant | Resurveys on the Schuylkill River, shore-line and hydrography. (See also Section VI.) |
| | 10 | Physical hydrography. | S. C. McCorkle, assistant | Continuation of the observation of ice formation and movement in Delaware River and bay. |
| SECTION III. | | | | |
| Maryland, District of Columbia, Virginia, and West Virginia, including bays, sea-ports, and rivers. | 1 | Topography | John W. Donn, assistant | Topographical resurvey of Annapolis Harbor and Roads. (See also Section I.) |
| | 2 | Geodetic leveling. | Andrew Braid, assistant | Connection by geodetic leveling of the tidal bench-marks at Annapolis. |

## APPENDIX No. 1—Continued.

| Sections. | Parties. | Operations. | Persons conducting operations. | Localities of work. |
|---|---|---|---|---|
| SECTION III—Continued. | No. 3 | Hydrography | Lieut. M. L. Wood, U. S. N., assistant; Ensigns Edward Lloyd and E. A. Anderson, U. S. N.; W. C. Willenbucher, observer and draughtsman. | Hydrographic resurvey of Annapolis Harbor and approaches. |
| | 4 | Topography | John W. Donn, assistant | Continuation of the detailed topographical survey of the District of Columbia. (See also Section I.) |
| | 5 | Topography | D. B. Wainwright, assistant | Continuation of the detailed topographical survey of the District of Columbia. |
| | 6 | Topography | W. C. Hodgkins, assistant | Continuation of the detailed topographical survey of the District of Columbia. |
| | 7 | Topographical bench-marks and topography. | J. A. Flemer, aid; Atlee Johnson and Peirce Britt. | Establishment of permanent bench-marks for the topographical survey of the District of Columbia, and continuation of detailed topographical survey. |
| | 8 | Topographical additions. | B. A. Colonna, assistant in charge of office. | Location of wharves on the Potomac River for additions to the charts. |
| | 9 | Hydrography | Lieut. M. L. Wood, U. S. N., assistant; Ensigns W. M. Constant, Edward Lloyd, and E. A. Anderson, U. S. N. | Hydrographic surveys and examinations in the vicinity of Cape Charles, Virginia. |
| | 10 | Physical hydrography. | Lieut. J. E. Pillsbury, U. S. N., assistant. | Observations of ocean currents off the capes of Virginia and between Nantucket and Cape Hatteras. (See also Sections I and VI. |
| SECTION IV. | | | | |
| North Carolina, including coasts, sounds, sea-ports, and rivers. | 1 | Special hydrography. | Lieut. Francis Winslow, U. S. N., assistant; Ensign J. C. Drake, U. S. N., assistant. | Supplementary work incidental to the special hydrography for the State of North Carolina. Surveys and investigations of oyster beds. |
| SECTION V. | | | | |
| South Carolina and Georgia, including coast, sea-water channels, sounds, harbors, and rivers. | 1 | Triangulation | C. O. Boutelle, assistant | Recovery and re-establishment of stations of the triangulation in the vicinity of Charleston, S. C. (See also Sections XIV and XV, and "special operations." |
| | 2 | Triangulation | Eugene Ellicott, assistant | Triangulation of the Cooper, Ashley, and Wando Rivers, South Carolina. (See also Section I.) |
| | 3 | Tidal observations. | J. G. Spaulding, tidal observer | Selection of a station for an automatic tide-gauge on Tybee Island, Georgia. (See also Section II.) |
| SECTION VI. | | | | |
| Peninsula of Florida from St. Mary's River, on the east coast, to and including Anclote Anchorage on the west coast, with the coast approaches, reefs, keys, sea-ports, and rivers. | 1 | Physical hydrography. | Lieut. J. E. Pillsbury, U. S. N., assistant; Ensigns R. M. Hughes, Harry Kimmell, C. S. Stanworth, J. E. Shindel, and Philip Andrews, U. S. N.; Assistant Surgeon Thomas Owens and Assistant Engineer W. W. White, U. S. N. | Gulf Stream explorations, 1889. Continuation of observations of currents in the Windward Island Passages. (See also Sections I, II, and III.) |
| | 2 | Hydrography | Lieut. J. F. Moser, U. S. N., assistant; Ensigns Franklin Swift, H. A. Bispham, S. M. Strite, and R. D. Tisdale, U. S. N. | Hydrographic surveys in the Bay of Florida, in the approaches to the Florida reefs, and on the Northwest Channel Bar, Key West. (See also Sections I and VII.) |
| | 3 | Topography | J. Hergesheimer, assistant; J. H. Gray, subassistant. | Topographical survey of the west coast of Florida between Cape Sable and Pavilion Key. (See also Section II.) |

## APPENDIX No. 1—Continued.

| Sections. | Parties. | Operations. | Persons conducting operations. | Localities of work. |
|---|---|---|---|---|
| SECTION VII. | | | | |
| Peninsula of Florida, west coast, from Anclote Anchorage to Perdido Bay, including coast approaches, bays, and rivers. | No. 1 | Hydrography | Lieut. J. F. Moser, U. S. N., assistant; Ensigns Franklin Swift, H. A. Bispham, S. M. Strite, and R. D. Tisdale, U.S.N. | Hydrographic survey (off-shore) between Cedar Keys and Light House Point, west coast of Florida. (See also Sections I and VI.) |
| | 2 | Triangulation | A. T. Mosman, assistant; F. H. Parsons and P. A. Welker, subassistants. | Triangulation of Perdido Bay, and its connection with the triangulation of Pensacola Bay. (See also Sections I and II.) |
| | 3 | Triangulation, topography, and hydrography. | P. A. Welker, subassistant | Triangulation, topography, and hydrography in Pensacola Bay and branches. Triangulation between Pensacola and Perdido Bays. (See also "Special operations." |
| SECTION VIII. | | | | |
| Alabama, Mississippi, Louisiana, and Arkansas, including Gulf coasts, ports, and rivers. | 1 | Triangulation | F. W. Perkins, assistant; W. B. Fairfield, extra observer. | Occupation of stations for the extension of the primary triangulation in Alabama towards the Gulf. (See also Section II.) |
| | 2 | Geodetic leveling. | Gershom Bradford, assistant; Isaac Winston, subassistant. | Extension of the line of levels of precision from Little Rock, Ark., towards the western boundary of the State. (See also sections XIII and XIV.) |
| | 3 | Magnetic observations. | J. B. Baylor, assistant | Occupation of a station in Louisiana for magnetic observations. (See also Sections II, IX, XIV, XV, and XVI.) |
| | 4 | Triangulation | C. H. Boyd, assistant; E. L. Taney, subassistant; C. H. Stone, recorder. | Triangulation of the Atchafalaya River, Louisiana. (See also Section L.) |
| | 5 | Triangulation and measurement of base. | F. W. Perkins, assistant; W. B. Fairfield, extra observer; C. H. Stone, recorder. | Measurement of base and verification of triangulation on the coast of Louisiana. (See also Section II.) |
| | 6 | Hydrography | Ensign L. M. Garrett, U. S. N., assistant; Ensigns John F. Luby and G. R. Evans, U. S. N. | Hydrographic surveys on the coast of Louisiana west of the Passes of the Mississippi. (See also Section I.) |
| SECTION IX. | | | | |
| Texas, including Gulf coast, ports, and rivers; also the Indian Territory. | 1 | Magnetic observations. | J. B. Baylor, assistant | Determinations of the magnetic elements at stations in Texas and at a station in the Indian Territory. (See also Sections II, VIII, XIV, XV and XVI.) |
| | 2 | Establishment of station for self-registering magnetic apparatus. | Isaac Winston, subassistant | Construction of buildings for the self-registering magnetic apparatus to be set up at San Antonio, Tex. (See also Sections XIII and XIV.) |
| SECTION X. | | | | |
| California, including the coast, bays, harbors, and rivers. | 1 | Hydrography | Lieut. H. B. Mansfield, U. S. N., assistant; Lieut. George M. Stoney, U. S. N. (part of season), and Lieut. D. H. Mahan, U. S. N.; Ensigns Guy W. Brown, J. P. McGuinness, W. L. Dodd, and W. H. Foust, U. S. N. | Hydrographic surveys on the coast of California from San Diego to Oceanside and vicinity. (See also Section XII.) |
| | 2 | Topography | A. F. Rodgers, assistant; J. E. McGrath, subassistant; John Nelson, aid. | Topographical surveys on the south coast of California in the vicinity of Del Mar, Encinitas, Carlsbad, and Oceanside. |
| | 3 | Hydrography | Lieut. Daniel Delehanty, U. S. N., assistant; Lieut. C A. Gove, U. S. N.; Ensigns Guy W. Brown, J. P. McGuinness, W. L. Dodd, and W. H. Foust, U. S. N. | Hydrographic survey on the coast of California from off the eastern end of San Onofre Mountain to Newport Landing, and hydrographic examination for a shoal reported off Point Firmin. |

## APPENDIX No. 1—Continued.

| Sections. | Parties. | Operations. | Persons conducting operations. | Localities of work. |
|---|---|---|---|---|
| SECTION X—Continued. | No. 4 | Measurement of base. | George Davidson, assistant; James S. Lawson, assistant; Fremont Morse, subassistant; John Nelson, aid; Ferdinand Westdahl, draughtsman and engineer; F. W. Edmonds, recorder. | Measurement of primary base line near Los Angeles, Cal. (See also Section XII.) |
| | 5 | Magnetic observations. | R. E. Halter, assistant | Magnetic record continued and absolute values of the magnetic elements determined monthly at the self-registering magnetic station at Los Angeles, Cal. |
| | 6 | Tertiary triangulation and topography. | Stehman Forney, assistant | Tertiary triangulation and topography on the coast of California from Cape San Martin westward. |
| | 7 | General charge of work of the land parties on the Pacific coast; connection of primary base line with the triangulation, etc. | George Davidson, assistant; James S. Lawson, assistant; Fremont Morse, subassistant. | Supervision of work on the Pacific coast. Establishment of a meridian line and a standard of length in Golden Gate Park, San Francisco. Magnetic and tidal work, etc. (See also Section XII.) |
| | 8 | Longitude determinations. | C. H. Sinclair, assistant; R. A. Marr, subassistant. | Exchanges of telegraphic signals for longitude between San Francisco (Lafayette Park Observatory), Mount Hamilton, Sacramento, Point Arena, Chabot Observatory, at Oakland, and Los Angeles. Also between Point Arena and Sacramento, Marysville and Sacramento, Sacramento and Los Angeles, and Los Angeles and Needles, Cal. (See also Sections XI, XVI, and XVII.) |
| | 9 | Hydrography | L. A. Sengteller, assistant | Hydrographic examination of Hospital Cove, Angel Island, San Francisco Bay. |
| | 10 | Tidal observations | George Davidson, assistant; Emmet Gray, observer. | Continuation of tidal record at the automatic tidal station at Saucelito, Bay of San Francisco. (See also Section XII.) |
| | 11 | Hydrography | Lieut. H. B. Mansfield, U. S. N., assistant; Lieut. G. M. Stoney, U. S. N. (part of season). Lieut. D. H. Mahan, U. S. N.; Ensigns Guy M. Brown, J. P. McGuinness, W. L. Dodd, and W. H. Foust, U. S. N. | Hydrographic surveys in the vicinity of Crescent City, Cal. (See also Section XII.) |
| SECTION XI. | | | | |
| Oregon and Washington Territory, including coast, interior sounds and bays, ports, and rivers. | 1 | Topographical reconnaissance. Triangulation and topography. | E. F. Dickins, assistant | Topographical reconnaissance of the coast of Oregon between Cape Sebastian and Rogue River completed; also topographical survey between Koos Bay and Umpquah River. Resurvey of Koos Bay begun. |
| | 2 | Hydrography | Lieut. J. M. Helm, U. S. N., assistant; Ensigns R. O. Bitler, Jos. Strauss, W. H. G. Bullard, and F. W. Jenkins, U. S. N. | Hydrographic survey from Cape Orford and vicinity to the southward. (See also Section I.) |
| | 3 | Topography and hydrography. | Cleveland Rockwell, assistant | Resurveys and examination of changes in the Columbia River in the vicinity of Astoria and between Tongue Point and Tansy Point. |
| | 4 | Longitude determinations. | Edwin Smith, assistant; C. H. Sinclair, assistant; R. A. Marr, subassistant. | Exchanges of telegraphic signals for longitude between Port Townsend and Seattle, between Seattle and Walla Walla, between Walla Walla, Wash., and Helena, Mont., and between Helena, Mont., and Spokane Falls, Wash. (See also Sections X, XVI, and XVII.) |

## APPENDIX No. 1—Continued.

| Sections. | Parties. | Operations. | Persons conducting operations. | Localities of work. |
|---|---|---|---|---|
| SECTION XI—Continued. | No. 5 | Examination of changes in water-front. | J. F. Pratt, assistant | Examination and report of changes in the water-front of Seattle and vicinity. |
| | 6 | Hydrography | Lieut. J. C. Burnett, U. S. N., assistant; Lieut. C. A. Gove, U. S. N.; Ensigns J. A. Bell, T. K. Hill, and J. P. McGuinness, U. S. N. | Hydrographic surveys in the vicinity of Cape Flattery, and in Neeah Bay, Washington Territory. |
| | 7 | Triangulation and topography. | J. F. Pratt, assistant | Triangulation and topography of Saratoga Passage, Penn's Cove, Oak Harbor, Crescent Harbor, and Skagit Bay, Washington Territory. |
| | 8 | Hydrography | Lieut. H. T. Mayo, U. S. N., assistant; Lieut. J. N. Jordan, U. S. N., assistant; Ensigns A. C. Almy and F. K. Hill, U. S. N. | Hydrographic surveys including Saratoga Passage to Skagit Bay, the northwest coast of Whidbey Island, Rosario Strait, and Bellingham Bay. |
| | 9 | Triangulation and topography. | J. J. Gilbert, assistant | Triangulation and topography of the Gulf of Georgia, including Lummi, Birch, and Semiah-moo Bays, and of Washington Sound. |
| SECTION XII. | | | | |
| Alaska, including the coast, inlets, sounds, bays, rivers, and the Aleutian Islands. | 1 | Hydrographic survey. | Lieut. Com. C. M. Thomas, U. S. N., assistant; Lieut. H. B. Mansfield; U. S. N., assistant. Officers attached to party of Lieutenant-Commander Thomas in 1888: Ensigns, J. N. Oliver, A. N. Wood, S. S. Wood, A. M. Beecher, J. D. McDonald, and G. R. Slocum, U. S. N. Officers attached to party of Lieutenant Mansfield in 1889; Lieut. E. G. Dorn, Lieut. A. N. Wood, Ensigns A. C. Almy, A. M. Beecher, J. G. McDonald, G. R. Slocum, and W. H. Foust, U. S. N. | Hydrographic surveys in Stephens Passage and vicinity, and in Portland Canal and vicinity, Southeastern Alaska. (See also Section X.) |
| | 2 | Tidal observations. | George Davidson, assistant; Fred Sargent, observer. | Tidal record continued at the automatic tidal station at St. Paul, Kadiak Island, Alaska. (See also Section X.) |
| | 3 | Hydrographic reconnaissance and establishment of tidal station. | Lieut. Commander H. E. Nichols, U. S. N., assistant. | Collection of data for Coast Pilot in Southeastern Alaska, and establishment of a tidal station at Unalaska. |
| | 4 | Preliminary determination of boundary line. | J. E. McGrath, subassistant; J. H. Turner, subassistant. | Preliminary survey of the frontier line between Alaska and British Columbia. (See also Section X.) |
| SECTION XIII. | | | | |
| Kentucky and Tennessee | 1 | Geodetic leveling | Isaac Winston, subassistant | Geodetic leveling from near Cairo, Ill., across western Kentucky and Tennessee. (See also Sections IX and XIV.) |
| | 2 | Geodetic operations. | Prof. A. H. Buchanan, acting assistant. | Occupation of stations for connecting the triangulation of the State of Tennessee with the primary triangulation in Northern Georgia. |
| | 3 | Magnetic observations. | James B. Baylor, assistant | Occupation of a station in Tennessee for magnetic determinations. |
| SECTION XIV. | | | | |
| Ohio, Indiana, Illinois, Michigan, and Wisconsin. | 1 | Magnetic observations. | J. B. Baylor, assistant | Determination of the magnetic elements at stations in Ohio, Indiana, Illinois, and Wisconsin. (See also Sections II, VIII, IX, XV, and XVI.) |
| | 2 | Reconnaissance and signal building. | George A. Fairfield, assistant; W. B. Fairfield, extra observer; E. E. Torrey, foreman. | Reconnaissance and building of signals for the transcontinental triangulation in Ohio and Indiana. |
| | 3 | Geodetic leveling. | Isaac Winston, assistant; P. A. Welker, subassistant; F. A. Young, recorder. | Lines of geodetic leveling carried from near Cairo, Ill., towards the Gulf of Mexico. (See also Sections IX and XIII. |

## APPENDIX No. 1—Continued.

| Sections. | Parties. | Operations. | Persons conducting operations. | Localities of work. |
|---|---|---|---|---|
| SECTION XIV—Continued. | | | | |
| Ohio, Indiana, Illinois, Michigan, and Wisconsin. | No. 4 | Geodetic operations. | C. O. Boutelle, assistant; Prof. J. E. Davies, acting assistant. | Reconnaissance for extending geodetic operations in the State of Wisconsin. (See also Sections V, XV, and "Special operations.") |
| SECTION XV. | | | | |
| Missouri, Kansas, Iowa, Nebraska, Minnesota, and Dakota. | 1 | Geodetic operations. | C. O. Boutelle, assistant; Prof. W. R. Hoag, acting assistant. | Measurement of base in connection with geodetic operations in the State of Minnesota. (See also Sections V, XV, and "Special operations.") |
| | 2 | Magnetic observations. | J. B. Baylor, assistant..... | Determinations of the magnetic elements at stations in Iowa, Nebraska, and Kansas. (See also Sections II, VIII, IX, XIII, XIV, and XVI.) |
| | 3 | Triangulation .... | F. D. Granger, assistant; F. H. Parsons, subassistant; T. O. Pulizzi, recorder; A. P. Barnard, foreman and recorder. | Occupation of stations for extending the transcontinental triangulation to the westward in Kansas. |
| SECTION XVI. | | | | |
| Nevada, Utah, Colorado, Arizona, and New Mexico. | 1 | Triangulation .... | William Eimbeck, assistant; E. L. Taney and J. H. Turner, subassistants. | Stations occupied for the extension to the eastward in Utah of the primary triangulation near the thirty-ninth parallel. |
| | 2 | Magnetic observations. | J. B. Baylor, assistant..... | Determinations of the magnetic elements at stations in Colorado and New Mexico. (See also Sections II, VIII, IX, XIV, and XV.) |
| | 3 | Longitude determinations. | C. H. Sinclair, assistant; R. A. Marr, subassistant. | Exchanges of telegraphic signals for the determination of the longitude of Verdi, Nev. (See also Sections X, XI, and XVII.) |
| SECTION XVII. | | | | |
| Idaho, Wyoming, and Montana. | 1 | Longitude determination. | Edwin Smith, assistant; C. H. Sinclair, assistant; R. A. Marr, subassistant. | Exchanges of telegraphic signals for the determination of the longitude of Helena, Mont. (See also Sections X, XI, and XVI.) |
| SPECIAL OPERATIONS..... | 1 | ..... | P. A. Welker, subassistant..... | Survey for the Commission appointed to select a site for a Navy-yard on the Gulf of Mexico and South Atlantic coasts. |
| | 2 | ..... | J. F. Pratt, assistant..... | Special survey made for the Commission organized to examine the Pacific coast north of the forty-second parallel with reference to a site for a Navy-yard. |
| | 3 | ..... | J. E. McGrath, subassistant; J. H. Turner, subassistant. | Organization of parties to make a preliminary determination of the boundary line between Alaska and British Columbia. |
| | 4 | ..... | C. O. Boutelle, assistant; Dr. J. J. Clark. | Charge of the exhibit of the Coast and Geodetic Survey at the Cincinnati Exposition. |

Blank page retained for pagination

# APPENDIX No. 2.—1889.

## STATISTICS OF FIELD AND OFFICE WORK OF THE COAST AND GEODETIC SURVEY FOR THE YEAR ENDING JUNE 30, 1889.

| | Total to June 30, 1888. | Total during fiscal year. | Total to June 30, 1889. |
|---|---|---|---|
| RECONNAISSANCE. | | | |
| Area in square statute miles | 383,531 | 30 | 383,561 |
| Parties, number of | | 3 | |
| BASE LINES. | | | |
| Primary, number of | 14 | 1 | 15 |
| Primary, length of, in statute miles | 90 | 11 | 101 |
| Subordinate, number of | 133 | 3 | 136 |
| Subordinate and beach measures, length of | 519 | 8 | 527 |
| TRIANGULATION. | | | |
| Area in square statute miles | 229,962 | 2,320 | 232,282 |
| Stations occupied for horizontal measures, number of | 12,400 | 178 | 12,578 |
| Geographical positions determined, number of | 23,709 | 337 | 24,046 |
| Stations occupied for vertical measures, number of | 878 | 20 | 898 |
| Elevations determined trigonometrically, number of | 2,181 | 48 | 2,229 |
| Heights of permanent bench-marks by spirit-leveling, number of | 720 | 36 | 756 |
| Lines of spirit-leveling, length of, in statute miles | 3,800 | 165 | 3,965 |
| Triangulation and leveling parties, number of | | 16 | |
| ASTRONOMICAL WORK. | | | |
| Azimuth stations, number of | 216 | 5 | 221 |
| Latitude stations, number of | 344 | 5 | 349 |
| Longitude stations, telegraphic, number of | 140 | *8 | 148 |
| Longitude stations, chronometric or lunar, number of | 110 | | 110 |
| Astronomical parties, number of | | 8 | |
| MAGNETIC WORK. | | | |
| Stations occupied, number of | 759 | †27 | 786 |
| Permanent magnetic stations, number of | 4 | ‡2 | 4 |
| Magnetic parties, number of | | 7 | |
| GRAVITY MEASURES. | | | |
| Home stations occupied, number of | 19 | | 19 |
| Foreign stations occupied, number of | 15 | | 15 |
| Parties, number of | | | |
| TOPOGRAPHY. | | | |
| Area surveyed, in square statute miles | 31,707 | 1,364 | 33,071 |
| Length of general coast, in statute miles | 7,689 | 1,081 | 8,770 |

* In addition to these eight new stations, five old stations were re-occupied.

† In addition to these twenty-seven new stations, there were twenty-one old stations re-occupied.

‡ Two previously occupied.

## APPENDIX No. 2—Continued.

| | Total to June 30, 1888. | Total during fiscal year. | Total to June 30, 1889. |
|---|---|---|---|
| TOPOGRAPHY—continued. | | | |
| Length of shore-line, in statute miles, including rivers, creeks, and ponds | 93,537 | 1,646 | 95,183 |
| Length of roads, in statute miles | 46,585 | 439 | 47,024 |
| Topographical parties, number of | | 26 | |
| HYDROGRAPHY. | | | |
| Parties, number of | | 15 | |
| Number of miles (geographical) run while sounding | 430,626 | 18,787 | 449,413 |
| Area sounded, in square geographical miles | 131,442 | 15,428 | 146,870 |
| Miles run additional of outside or deep-sea soundings | 85,272 | 146 | 85,418 |
| Number of soundings | 18,846,881 | 599,009 | 19,445,890 |
| Deep-sea soundings | 13,205 | 9 | 13,214 |
| Deep-sea temperature observations | 12,920 | 2,535 | 15,455 |
| Current stations, number of, occupied by hydrographic parties | | 18 | |
| Deep-sea current stations, number of | | 39 | |
| Deep-sea subcurrent observations, number of; Deep-sea surface current observations, number of | | 2,577 | |
| Specimens of bottom, number of | 13,230 | 190 | 13,420 |
| Automatic tide-gauges established | 88 | 1 | 89 |
| Automatic tide-gauges discontinued | 84 | | 84 |
| Parties doing tidal work exclusively | | 3 | |
| Parties doing tidal work in connection with hydrographic work | | 20 | |
| Staff and box gauges established | 1,944 | 75 | 2,019 |
| Staff and box gauges discontinued | 1,937 | 71 | 2,008 |
| RECORDS. | | | |
| Triangulations, originals, number of volumes | 5,359 | 250 | 5,609 |
| Astronomical observations, originals, number of volumes | 1,897 | 25 | 1,922 |
| Magnetic observations, originals, number of volumes | 672 | 2 | 674 |
| Magnetic observations, originals, number of cahiers | | 68 | |
| Pendulum observations, originals, number of volumes | | 1 | |
| Duplicates of above, number of volumes | 5,791 | 247 | 6,038 |
| Duplicates of above, number of cahiers | | 66 | |
| Computations, number of volumes | 4,183 | 11 | 4,194 |
| Computations, number of cahiers | | 220 | |
| Hydrographic soundings and angles, originals, number of vols | 10,743 | 499 | 11,242 |
| Hydrographic soundings and angles, duplicates, number of vols | 3,026 | 238 | 3,264 |
| Tidal and current observations, originals, number of volumes | 4,208 | 146 | 4,354 |
| Tidal and current observations, duplicates, number of volumes | 2,742 | 107 | 2,849 |
| Aggregate years of record from automatic tide-gauges | $262\frac{5}{12}$ | $3\frac{11}{12}$ | $266\frac{4}{12}$ |
| Tidal stations for which reductions have been made | 1,183 | 222 | 1,405 |
| Aggregate years of record reduced | 239 | 23 | 262 |
| MAPS AND CHARTS. | | | |
| Topographic maps, originals | 1,856 | 42 | 1,898 |
| Hydrographic charts, originals | 2,024 | 92 | 2,116 |

APPENDIX No. 2—Continued.

| | Total to June 30, 1888. | Total during fiscal year. | Total to June 30, 1889. |
|---|---|---|---|
| ENGRAVING AND PRINTING. | | | |
| Finished charts published from engraved plates, total number of | 447 | 15 | 462 |
| Engraved charts withdrawn from circulation | 153 | 7 | 160 |
| Engraved plates of preliminary charts and diagrams for the Coast and Geodetic Survey reports, number of | 668 | | 668 |
| Electrotype plates made | 2,020 | 84 | 2,104 |
| Charts published by photolithography, number of | | 36 | |
| Charts published by photolithography withdrawn from circulation | | 15 | |
| Engraved plates of Coast Pilot charts | 80 | | 80 |
| Engraved plates of Coast Pilot views | 98 | | 98 |
| Printed sheets of maps and charts distributed | 670,154 | 49,312 | 719,466 |
| Printed sheets of maps and charts deposited with sale agents | 309,722 | 27,676 | 337,398 |

Blank page retained for pagination

# APPENDIX No. 3.—1889.

## INFORMATION FURNISHED TO DEPARTMENTS OF THE GOVERNMENT IN REPLY TO SPECIAL REQUESTS, AND TO INDIVIDUALS UPON APPLICATION, DURING THE FISCAL YEAR ENDING JUNE 30, 1889.

| Date. | | Name. | Data furnished. |
|---|---|---|---|
| 1888. | | | |
| July | 7 | McDougall, J. M., Searsport, Me | Distance between primary stations Harris Mountain and Ragged Mountain. |
| | 10 | Chapman, R. P., Hartford, Conn | Information as to measurement of an arc of parallel, and formula for computation of length for any latitude. |
| | 11 | Wood, H. B., Boston, Mass | Geographical positions in Massachusetts and Rhode Island, and methods for computing latitude, longitude, and azimuth. |
| | 17 | U. S. Geological Survey | Positions and heights of fourteen trigonometrical stations in Virginia. |
| | 17 | Wood, H. B., Boston, Mass | Descriptions of stations in Boston Bay. |
| | 21 | U. S. Geological Survey | Positions of ninety-eight stations in New York and New Jersey. |
| | 21 | Stanton, W. S., Major of Engineers, U. S. A, First and Second Light-House Districts, Boston, Mass. | Description of tidal bench-marks at Pemaquid and Portland Harbors, Maine. |
| | 27 | Morse, Fred. S., Miami, Dade County, Fla | Magnetic declination at Miami for 1846 and 1888, and annual decrease of declination at these epochs. |
| | 31 | Wright, E., Civil Engineer, Atlantic City, N. J | Geographical position of the light-house at Atlantic City, and information about magnetic declination at that place. |
| | 31 | Branner, J. C., State Geologist of Arkansas | Result of spirit levels of precision between Arkansas City and Little Rock, Ark., with description of bench-marks. |
| | 31 | Cook, George H., State Geologist, New Jersey | Information about position of old triangulation station Morgan (2). |
| Aug. | 2 | Harkness, William, Professor Mathematics U. S. N | Two comparisons of 10-foot rod. |
| | 2 | Davidson, George, Assistant U. S. Coast and Geodetic Survey. | Comparison of two thermometers and a small scale. |
| | 2 | Director, U. S. Geological Survey | A list of geographical positions, primary and subordinate, Blue Ridge triangulation, Virginia. Description of trigonometrical stations and geographical positions of the Capitol, Baptist College and St. Paul's Church, Richmond, Va. Heights of eight secondary stations, survey of Blue Ridge. |
| | 9 | Cook, G. H., State Geologist, New Jersey | Positions and descriptions of three points in New York and New Jersey. |
| | 16 | Hill, Alford J., St. Paul, Minn | Magnetic declination at mouth of Scioto River, Ohio. |
| | 20 | Farrow, W. C., Surveyor, Snydertown, Northumberland County, Pa. | Magnetic declination at Sunbury and secular variation at that place. |
| | 21 | Grant, W. H., Washington, D. C | Height of three bench-marks, vicinity of New York City. |
| | 21 | Hood, Robert, C. E., Livingston, N. Y | Secular variation of the magnetic declination in Columbia County, N. Y. |
| | 21 | Bauman, W., Civil Engineer, Washington, D. C | Magnetic variation at Hog Island, Virginia, for 1888 and 1889. |
| | 27 | Stanton, W. S., Major U. S. Engineers | Magnetic declination at Moose Peak Light-House in February, 1826. |
| | 27 | Starkweather, G. B., Washington, D. C | Magnetic declination at a place in the city of Washington. |
| | 28 | Stanton, W. S., Major U. S. Engineers | Magnetic declination at Grindel's Point, Maine, in September, 1888. |
| | 29 | Grant, William H., Civil and Topographical Engineer, 1828 Jefferson Place, Washington, D. C. | Description of bench-marks at Verplanck's Point, Dobb's Ferry, and Polhemus Dock, New York. |
| Sept. | 1 | Powell, J. W., Director U. S. Geological Survey | Thirty-five geographical positions and descriptions of stations, vicinity of Portsmouth, N. H. |
| | 3 | Tingley, George C., Civil Engineer, Providence, R. I | Magnetic declination at Mount Vernon, Virginia, for 1888. |
| | 3 | Stanton, W. S., Major U. S. A., Engineer First and Second Light-House Districts, Boston, Mass. | Description of bench-marks, Steel's Harbor, Maine; Gloucester Harbor, Massachusetts; Newburyport Harbor, Massachusetts. |
| | 5 | Houston, D. C., Lieutenant-Colonel U. S. A., New York, N. Y. | Description of bench-marks, Wilson's Point and Darien Harbor, Connecticut. |
| | 5 | Atkinson, L., Surveyor, Cotton Hill, W. Va | Table of the secular variation of the magnetic declination in West Virginia between 1780 and 1895. |

## APPENDIX No. 3—Continued.

| Date. | | Name. | Data furnished. |
|---|---|---|---|
| 1888. | | | |
| Sept. | 8 | Powell, J. W., Director U. S. Geological Survey | Two geographical positions in New Hampshire. |
| | 14 | Hannis, S. G., West New Jersey | Difference in data of geographical positions near Great Egg Harbor, New Jersey, as used in the surveys of 1841-'42, and at the present time. |
| | 17 | Witt, H. C., Surveyor, Taneytown, Carroll County, Md | Magnetic declination at Taneytown, Baltimore and Washington. |
| | 17 | Skinner, E. B., College Springs, Page County, Iowa | Geographical position of Omaha, Nebr. |
| | 18 | Pond, Charles F., Lieutenant U. S. N., Mare Island Navy-Yard. | Description of magnetic stations in Lower California, on coast of Mexico, and at San Diego, Cal., occupied by the U. S. Coast and Geodetic Survey. |
| | 21 | U. S. Geological Survey | Geographical positions and descriptions of five principal triangulation stations in Maine. |
| | 22 | Livermore, W. R., Major U. S. A., Newport, R. I | Description of bench-marks, Vineyard Haven and Cottage City, Mass. |
| | 29 | Fiebeger, G. J., First Lieutenant U. S. Engineers, Norfolk, Va. | Description of bench-marks, Norfolk, Va., 1866 and 1882; Berkley, Va.; Elizabeth River, Virginia; South Bridge, Elizabeth River, Virginia; South Bridge, Craney Island, Virginia. |
| Oct. | 2 | Powers, James K., President Alabama State Normal School, Florence, Ala. | Heights of fifteen stations in Alabama and one in Tennessee. |
| | 3 | De Cordemoy, Engineer, 7 Rue de l'Abbé de l'Epeé, Paris, France. | Upon the diurnal inequality and other characteristics of the tides on the coast of the United States. |
| | 5 | Warren, Monroe., Pulaski, Oswego County, N. Y | Information as to the method of computing the secular variation of the magnetic needle for places in Oswego County. |
| | 5 | Turtle, J. E., U. S. Assistant Engineer | Geographical positions and geodetic data of twelve stations on St. Andrews Bay with description of stations. |
| | 5 | U. S. Geological Survey | Geographical positions and geodetic data for thirty-four trigonometrical stations in eastern Colorado with their descriptions. |
| | 9 | Austin, W. W., Vineland, N. J | Geographical positions of two points in Vineland. |
| | 10 | Abell, Rev. J. J., St. John's College, Bardstown, Ky | Geographical positions and azimuths of four trigonometrical stations. |
| | 10 | Melson, W. G., Fort Landing, Tyrrell County, N. C | Table of magnetic declinations for Tyrrell County between 1700 and 1895. |
| | 11 | Fuertes, Prof. E. A., Director New York State Weather Service, Ithaca, N. Y. | Information as to selection of meteorological stations in the State. |
| | 11 | Guest, J. H., Bellevue P. O., Del | Present value of a discovery of an old triangulation station. |
| | 12 | Powell, J. W., Director U. S. Geological Survey | Description of three stations in Rhode Island. |
| | 12 | Bourne, J. M., Harlan Court-House, Ky | Table for central Kentucky of magnetic variation between 1800 and 1895 with instructions how to use it. |
| | 15 | Craig, N. B., Philadelphia | Geographical positions and geodetic information of three trigonometrical points near Philadelphia, and description of one station at the Navy-yard. |
| | 18 | Fuertes, Prof. E. A., Director New York State Weather Service, Ithaca, N. Y. | A list of sixty heights in the State of New York and the geographical position of all stations trigonometrically determined in height by the Coast and Geodetic Survey. |
| | 19 | Powell, J. W., Director U. S. Geological Survey | Geodetic data for forty-three trigonometrical points in Nevada and Colorado between latitude 37° and 41° and longitude 117° and 120°. |
| | 19 | Dyer, Lieut. G. L., Hydrographer U. S. N | Magnetic declination at Hanover, N. H., and secular variation of the same. |
| | 27 | Dunstan and Wingate, Roanoke County, Va | Table of secular variation of the declination between 1800 and 1895 for Roanoke County and directions for using the table. |
| | 27 | Cook, Prof. G. H., State Geologist, New Jersey | Geographical positions of five stations near the New York and New Jersey boundary, vicinity of Staten Island. |
| | 27 | Kulm, J. R., Civil Engineer, Valparaiso, Ind | Magnetic declination at Valparaiso in 1865, 1880, and 1889. |
| | 29 | Dyer, G. L., Lieutenant U. S. N., Hydrographic Office | Latitude and longitude of astronomical observatory at the mouth of the Rio Grande. |
| | 31 | De Cordemoy, Engineer, 7 Rue de l'Abbé de l'Epeé, Paris, France. | Upon the diurnal inequality and other characteristics of the tides on the coasts of the United States. |
| Nov. | 2 | Smith, Jared A., Lieutenant-Colonel U. S. A. Corps of Engineers, Portland, Me. | Description of bench-marks, Bar Harbor, Maine. |
| | 3 | Pratt, John P., Civil Engineer, Green Cove Springs, Fla | Tidal data, Palatka, Fla. |
| | 5 | Derby, George McC., Captain U. S. A. Corps of Engineers, New York, N. Y. | Description of bench-marks, Verplanck's Point, Poughkeepsie, N. Y. |
| | 5 | Green, F., College Point, Louisiana | Height of bench-marks at Jefferson College, above the Gulf. |
| | 5 | Brown, E. L., Civil Engineer, Brockton, Mass | Geodetic information about the triangle side, Prospect Hingham to Blue Hill. |
| | 6 | Edwards, W. B., Surveyor, Penick, Marion County, Ky | Magnetic declination at Penick and annual change. |
| Nov. | 7 | Black, W. M., Captain, U. S. Engineers | Geodetic data of the triangulation between Six-mile Creek and Sister's Creek, St. John's River, Florida. |

## APPENDIX No. 3—Continued.

| Date. | Name. | Data furnished. |
|---|---|---|
| 1888. | | |
| 7 | Warner, M., Pulaski, N. Y | Probable error of the computed magnetic declination at Pierrepont Manor, N. Y. |
| 8 | Paret, M. P., Engineer, Brunswick, Ga | Geographical positions of triangulation points at and near Brunswick, Ga. Table of times of elongation of polaris and of azimuth of star when at elongation. |
| 9 | Feldpauche, A., Engineer, Philadelphia, Wilmington and Baltimore Railroad. | Heights of bench-marks on the line of spirit-levels between Hagerstown and Washington. |
| 12 | Cook, G. H., chairman of Joint Boundary Commission, New York and New Jersey. | Geographical position of one hundred and five trigonometrical points near the New York and New Jersey boundary, vicinity of Staten Island and of Raritan Bay. |
| 12 | Craig, N. B., Philadelphia, Pa | Geographical position of six triangulation points in the vicinity of Philadelphia. |
| 13 | Olney, George W., Editor World Almanac, New York, N. Y | Tidal data for the World Almanac. |
| 15 | Edwards, W. B., Surveyor, Penick, Ky | Time of change in Central Kentucky in the direction of the secular movement of the magnetic needle, and table of times of the elongation for 1888–'89, and for latitude 35° to 40°. |
| 15 | Biddle, John, Lieutenant U. S. Engineers, West Point, N. Y | Geodetic data of three trigonometrical stations near West Point. |
| 15 | Moreaux, M., Magnetic Observatory, du Parc St. Maur, Paris, France. | Magnetic pamphlets App. 14, Report 1872, Appendix 22, Report 1862, Appendix 9, Report 1874 and Report 1869. |
| 16 | Kurth, A., Civil Engineer, Brooklyn, N. Y | Thirty-five geographical positions vicinity of Coney Island and Gravesend Bay. |
| 16 | Forsyth, W., City Surveyor, Washington, D. C | Change in the bearings of two lines in the District of Columbia between the years 1869 and 1888, and the present bearing of objects. |
| 21 | Curtis, G. E., Washburn College, Topeka, Kans | Works recommended, bearing on the distortion of various projections of maps and charts. |
| 21 | American Metre Company, Philadelphia | Testing cubic foot measure. |
| 21 | Fairbanks Company, St. Johnsburgh, Vt | Verification and adjustment of two small weights. |
| Dec. 7 | De Camp, E. A., Los Angeles, Cal | Geographical positions and geodetic data of fifty-nine points between Point Dume and San Pedro. |
| 13 | Fernall, George W., Civil Engineer, Farmington, N. H | Geographical positions of Blue Job and Garrison. |
| 14 | Gillespie, G. L., Lieutenant-Colonel of Engineers U. S. Army, Boston, Mass. | Description of tidal bench-marks at Chatham North Light-House and at Harding's Beach, Massachusetts. |
| 22 | Hamilton, T. A., Birmingham, Ala | Secular variation of the magnetic declination, Report 1886, Appendix 12. |
| 22 | Ford, A. M., Salem, N. J | Description of tidal bench-marks at Absecon Light and at Atlantic City, N. J. |
| 23 | Hipple, W. P., Media, Pa | Height of station Yard. |
| 23 | Bourne, J. M., Harlan, Ky | Table of the secular variation of the magnetic declination for the region of Cumberland Gap. |
| 23 | Vermeule & Bien, Civil and Mechanical Engineers | List of geographical positions, azimuths, distances, etc., of thirty-nine trigonometrical points in New York, between the Hudson and the Connecticut and Massachusetts boundaries. |
| 25 | Vermeule & Bien, Civil and Mechanical Engineers, New York. | Descriptions of trigonometrical stations Hudson River to Connecticut line. |
| 26 | Powell, J. M., Director U. S. Geological Survey | Longitude of Helena, Mont. |
| 26 | Willard, J. H., U. S. Engineers | Description of Delta base-line, Louisiana, and length of base. |
| 26 | U. S. Geological Survey | Geographical positions of Little Rock and Fort Smith, Ark. |
| 28 | Borden, P. S., jr., City Engineer, Fall River | Geographical positions and descriptions of seven trigonometrical stations at Fall River. |
| 31 | Marshall, W. G | Approximate height of Capitol at Nashville, Tenn., above the sea. |
| 31 | Geological Survey | Comparison of tape-line. |
| 31 | Soltmann & Co., New York | Comparison of two ten-foot rods. |
| 31 | U. S. Internal Revenue Bureau | Comparison of one thermometer. |
| 1889. | | |
| Jan. 3 | U. S. Geological Survey | The geographical position of Ellsworth, Kans. |
| 3 | Crisfield, A., Library of Congress | Magnetic declination at some places in Kent County, Md., in 1802 and 1840. |
| 7 | Mansfield, S. M., Lieutenant-Colonel U. S. Engineers, Boston, Mass. | Geographical position of Green Island Station. |
| 7 | Howell, George R., Librarian, General Library, Albany, N. Y. | Results of magnetic observations on Eastern Long Island, New York, and secular variation from 1720 to date. |
| 12 | Cone, J. P., Canute, Kans | Magnetic declination at Canute in 1889. |
| 17 | U. S. Geological Survey | Descriptions of stations in Nevada. |
| 19 | Stradling, G., Baltimore, Md | Diurnal variation of the magnetic horizontal force at Baltimore. |
| 21 | U. S. Geological Survey | Heights from spirit leveling in Arkansas. |

## APPENDIX No. 3—Continued.

| Date. | | Name. | Data furnished. |
|---|---|---|---|
| 1889. | | | |
| Feb. | 1 | Hines, E. D., Salem, Mass | Description of station Folly Hill, also geographical position and height of the same. |
| | 4 | Borden, jr., C. P., City Engineer, Fall River, Mass | Positions of corners of townships, vicinity of Fall River. |
| | 6 | Shedd, J. Herbert, Civil Engineer, Providence, R. I | Description of bench-marks at Wickford and Newport Harbor, Rhode Island. |
| | 7 | Robson, H. A., Cotton Hill, W. Va | Changes of magnetic declination in West Virginia between the year 1850 and the present time. |
| | 9 | Peytine, I. J., Washington D. C | Magnetic declination at Aquia Creek, Virginia, between the years 1860 and 1888. |
| | 9 | U. S. Geological Survey | Height of bench-marks on line of spirit-levels between New Haven and Jefferson, Mo. |
| | 11 | Greely, General A. W., Chief Signal Officer | Heights above the average level of the Gulf of Mexico of prominent places along the Mississippi between New Orleans and St. Louis, as resulting from lines of spirit-levels. |
| | 13 | Sheperd, John, Bristol, Md | Observed declination at Washington, D. C., from the earliest to the present time. |
| | 13 | Donham, G. N., Portland, Me | Copy of manuscript tidal predictions for Portland and Boston for January, February, and March, 1890. |
| | 21 | Hydrographic Office, U. S. Navy | Copy of Lieutenant Very's magnetic observations at Santa Cruz, Patagonia, 1882. |
| | 26 | U. S. Geological Survey | Three geographical positions on Fisher's Island, New York. |
| Mar. | 2 | Whitehead, P., Amherst Court-House, Va | Heights of eight prominent stations in Virginia. |
| | 2 | Glass, Hon. P. T | Geographical positions of the places where the northern and southern State lines of Tennessee intersect the Mississippi River. Geographical position of Cairo, Ill., of Columbus, Ky., of Hickman, Ky., and of Memphis, Tenn., also information about Chickasaw Bluffs, Nos. 1 and 2. |
| | 2 | Hagaman, A. B., Surveyor, East Feliciana Parish, La | Copy of Appendix 9, Report for 1881. |
| | 5 | Garvin, J. W., Santa Ana, Los Angeles County, Cal | Explanation of Tide-Tables, Pacific Coast, 1889. |
| | 6 | Ford, A. M., Salem, N. J | Information concerning bench-mark, Atlantic City, N. J. |
| | 6 | Holmes, A. C., Hickman, Ky | Change of magnetic declination near Hickman, Ky., between 1838 and the present time. |
| | 14 | Powell, J. W., Director U. S. Geological Survey | Distances, azimuths and back azimuths, between stations Ossipee and Independence, and stations Ossipee and Mount Pleasant, Me. |
| | 14 | Wharton, W. J. L., Captain R. N. Hydrographer to the Admiralty, London, S. W. | Tide-rolls from automatic gauges at Saucelito, Cal., and Kadiak Island, Alaska, for March, 1888. |
| | 16 | Black, George A., Counselor at Law and Proctor in Admiralty, No. 71 Wall street, New York. | Times and heights of high and low waters, Governor's Island, New York, and Sandy Hook, New Jersey, May 24, 1887. |
| | 21 | Baldwin, H. L., Geological Survey | Position of astronomical station at Ellsworth, Kans., and reference to two other points. |
| | 23 | Powell, J. W., Director U. S. Geological Survey | Description of three geodetic stations, and geographical positions of eleven trigonometrical stations in Maine. |
| | 30 | Hains, P. C., Lieutenant-Colonel U. S. Engineers | Fifty-one geographical positions and triangulation data for region between Aqueduct Bridge, Georgetown, and Mount Vernon, Virginia. |
| | 30 | Spofford, N., Civil Engineer, Haverhill, Mass | Magnetic declination at London, England, 1740. |
| | 30 | Blakman, R. L., Danville, Boyle County, Ky | Secular variation of the magnetic declination in Boyle County, between 1840 and 1890. |
| | 30 | Burgess, C. H., Cleveland, Ohio | Comparison of copper tape-line. |
| Apr. | 1 | Powell, J. W., Director U. S. Geological Survey | Geographical positions of stations, York and Bradbury, Me., and of all principal trigonometrical points in the State of Connecticut. |
| | 2 | Clark, John W., Superintendent Rockdale Public School, Milan County, Tex. | Magnetic declination map for 1885, and Appendix 12, Report for 1886. |
| | 3 | Oldberg, John, Washington, D. C | Geographical position of Fort Smith, Ark. |
| | 3 | Jennings, J. H., U. S. Geological Survey | Geographical positions of several points in Connecticut. |
| | 12 | Swinburne, G. W., Engineer, Easby, Ala | Magnetic declination at Easby at present. |
| | 12 | Stanton, W. S., Major of Engineers, U. S. Army | Magnetic declination at Great Duck-Island, Maine. |
| | 15 | Janes, Charles F., Providence, R. I | Mean rise and fall of tides at Dutch Island, Narragansett Bay, Rhode Island, with bench-mark data. |
| | 18 | Willard, J. B., Captain U. S. Army | Length of Delta base, Louisiana, as measured and as referred to the sea level. |
| | 19 | Durham, M. V., No. 10 Warren street, N. Y | Tide Table for Canarsie, Long Island, New York, with explanations. |
| | 20 | Powell, J. W., Director U. S. Geological Survey | Geographical positions, heights and descriptions of a number of trigonometrical stations in West Virginia. |

## APPENDIX No. 3—Continued.

| Date. | | Name. | Data furnished. |
|---|---|---|---|
| 1889. | | | |
| Apr. | 20 | Jones, Charles F., Civil Engineer, Providence, R. I. | Length of triangle side McSparran (1869) to Hall. |
| | 20 | Boyd, F. H., County Surveyor, Marshall, Mo. | Magnetic declination at Marshall, Mo. |
| | 23 | Tyler, A. V., Damascus, Wayne County, Pa. | Pamphlet on secular variation and map of magnetic declination for 1885. |
| | 23 | Taylor, T. N., Austin, Tex. | Geographical position of Austin, Tex. |
| | 24 | Willard, J. H., Captain U. S. Engineers, Vicksburg, Miss. | Results of spirit-leveling for bench-marks at St. Louis, Mo., at Delta La., and at Red River Landing. |
| | 27 | Newbrough, W., Lexington, Ky. | Magnetic map for 1885, and annual change of declination. |
| | 27 | Haupt, Lewis M., Professor of Civil Engineering, University of Pennsylvania, Philadelphia. | Tidal data on coast of the United States at mouths of tidal rivers. |
| | 27 | Andrews, Horace., Engineer, Albany. | Comparison of steel tape. |
| May | 4 | Gannett, S. S., U. S. Geological Survey. | Geographical positions and descriptions of trigonometrical stations Eastern Pennsylvania north of Pottsville. |
| | 4 | Pierce, Eugene E., Assistant Massachusetts Topographical Commission. | Corrected position of Powow Station (Borden). |
| | 7 | Gannett, S. S., U. S. Geological Survey. | Positions and description of three stations in Vermont. |
| | 10 | Powell, J. W., Director U. S. Geological Survey. | Triangulation data in Eastern Pennsylvania; twelve geographical positions and description of stations. |
| | 11 | Tully, Kivas., St. Louis, Mo. | Directions for reading and reducing tidal curves. |
| | 13 | Babb, Cyrus B., Boston, Mass. | Twenty-six geographical positions of triangulation points in vicinity of Camden, Me., with description of stations. |
| | 14 | Ten Eyck, E. Y., New York. | Magnetic chart for 1885 and Appendix No. 12, Report for 1886. |
| | 14 | Black, W. M., Major U. S. Army, St. Augustine, Fla. | Geographical positions, Mount Cornelia and the St. John's River Light, and distance between them. |
| | 16 | Jones, J. H. B., Surveyor, Brownsburg, Va. | Magnetic map for 1885 and pamphlet on secular variation of the magnetic declination, with reference to Lexington, Va. |
| | 18 | Mansfield, S. M., Lieutenant-Colonel U. S. Army, Boston, Mass. | Description of trigonometrical stations Morn Head, Squantum, and Thompson's Island. |
| | 21 | McMillan, A. J., Empire City, Oregon. | Magnetic declination at Yaquina Head, Oregon, daily range of declination and annual change. |
| | 24 | Reichert, Th., Surveyor-General of California. | Geodetic data between Verdi, Nev., and Lake Tahoe along the boundary between California and Nevada, also descriptions of stations, sketches, and other information. |
| | 27 | Smith, F. H., University of Virginia. | Magnetic declination observed at Staunton, Va., between 1823 and the present time: position of the agonic line between A. D. 1500 and 1900. |
| | 27 | Maxson, F. O., Civil Engineer U. S. Army. | Comparison of one hundred feet steel tape. |
| | 27 | Colwell, W. E., Superintendent Ammonia and Chemical Company. | Information furnished as to the value of certain weights and measures. |
| | 27 | Walton, J. P., Lincoln, Nebr. | Do. |
| June | 3 | Paine, Charles H., Halifax, Mass. | Description of bench-mark, Mappoisett, Mass. |
| | 5 | Brooke, F. M., Philadelphia, Pa. | Heights of stations Yard and Bethel above the mean level of the ocean. |
| | 10 | Janes, C. F., Civil Engineer, Providence, R. I. | Description of several trigonometrical stations about Point Judith, Rhode Island. |
| | 13 | Brice, H. C., Surveyor and Engineer, La Crosse, Wis. | Latitude and longitude of astronomical station at La Crosse, and description of same. |
| | 13 | Luther, Prof. S. F., Hartford, Conn. | Copy of predictions, Astoria and Port Townsend, 1890. |
| | 21 | Schenck, D. W., Oak Tree, York County, Va. | Magnetic declination and annual change in Middlesex County, Va. |
| | 24 | Page and Ellis, San Francisco, Cal. | Copy of meteorological abstract and half-hourly ordinates, Sausalito, California, October, 1888. |
| | 28 | Ingersoll, W. H., Pautuxet, R. I. | Tidal data in Narragansett Bay, Rhode Island. |
| | 29 | Adams, Edward P., Surveyor First and Second Lighthouse District, Edgartown, Mass. | Description of bench-marks at Cape Poge, Massachusetts in 1854 and 1888. |
| | 29 | Black, William, Capt. U. S. Engineers, St. Augustine, Fla. | Information furnished relating to weights and measures. |

Blank page retained for pagination

# APPENDIX No. 4—1889.

## REPORT OF THE ASSISTANT IN CHARGE OF OFFICE AND TOPOGRAPHY FOR THE YEAR ENDING JUNE 30, 1889.

U. S. COAST AND GEODETIC SURVEY OFFICE,
*Washington, D. C., October* 17, 1889.

SIR: I have the honor to submit my Annual Report for the Office for the fiscal year ending June 30, 1889, and along with it the reports of the various divisions thereof submitted by their respective chiefs, as follows:

The Computing Division, by Assistant C. A. Schott.
The Drawing Division, by Assistant W. H. Dennis.
The Engraving Division, by Assistant H. G. Ogden.
The Instrument Division, by Assistant A. Braid.
The Tidal Division, by Mr. A. S. Christie.
The Miscellaneous Division, by General Office Assistant M. W. Wines.
The Chart Division, by Assistant G. Bradford.
The Archives and Library, by Mr. A. Martin.
The Accounting Division, by Mr. J. W. Parsons.
The Weights and Measures Division, by Assistant O. H. Tittmann.

We have continued to advance the interests of the public service by promoting the efficiency of the Survey in such directions as practicable. The public itself has quickly felt this, as indicated by the greater demand for our charts and other publications, and the increased calls for these have necessitated more labor, both skilled and unskilled, to supply the demand. In the item of charts delivered to our agents, which has increased by two thousand four hundred and three sheets, I estimate that there would have been an increase of three thousand five-hundred sheets at least, had we been able to print the charts as rapidly as they were called for. Our plate printers and their helpers were denied leave of absence and worked full hours throughout the summer months, and we started an additional press on contract work, but we fell behind steadily during the summer, that being the season in which there is generally the greatest demand for our charts.

Along with increased proficiency and business comes increased labor of all kinds, and the office has now about reached the limit of its capacity with the present force. The number of letters written and press-copied at the Office, including all except the Hydrographic Inspector's correspondence, was nineteen thousand seven hundred and five during the fiscal year, or sixty-three for every day on which the Office was open for the transaction of business. Over five-hundred of these were prepared in furnishing specific information called for by parties outside of the Survey, information which was in our possession but not published; the preparation of these letters consumed a considerable part of the time of some of our best men, for being on technical questions, they could not be replied to in a merely clerical manner.

The production of new charts and maps was very large during the year, many times larger in fact than during any previous fiscal year, viz:

| | |
|---|---|
| Photolithographs: | |
| Placed on shelves in Chart Room | 36 |
| Placed in Atlas of Washington, D. C., etc. | 24 |
| Could not order printed for want of funds | 8 |
| Making a total number of drawings of charts completed for publication by photolithography | 68 |
| The number of new charts issued from copper-plates was | 13 |
| Printed from transfers from copper to stone | 2 |
| New editions of Charts | 9 |
| Making in all from Engraving Division | 24 |

Although we have made some progress in bringing up the back work for publication, there remains a large amount of valuable material, such as magnetic, tidal, current, hydographic, topographic and geodetic information, that has been gathered with much pains and expense and that we are unable to present to the public for want of skilled help. To enable us to utilize it, additional computers, draughtsmen, engravers, printers, mechanicians, laborers, and writers are urgently needed, and for them additional room is required, as well as for storage of valuable matter belonging to the Survey. I therefore recommend the procuring, by rent or purchase, at least the middle house of the Butler Building and the whole of the space of the brick buildings in its rear now used as offices.

The Office of Construction of Standard Weights and Measures is rapidly advancing in proficiency and usefulness. In order to compare the Standards belonging to the Survey and the base bars used in measuring its geodesic bases the Office constructed a comparing room in one of the large vaults under the pavement in front of the Richards Building. It gives satisfactory results and will be fully described in a subsequent paper.

A Disbursing Agent is badly needed for the Survey. Mr. Geo. A. Bartlett, the Disbursing Clerk of the Treasury, upon whom the duty of disbursing for the Survey is now placed, is uniformly courteous and obliging, but it is a great inconvenience to us, and especially to our field parties, to have him so far away from the Office, and I respectfully recommend the designation of some one in the employ of the Survey to disburse for it.

The form of the present appropriation for the maintenance of the Office force is too rigid and needs remodeling. As matters now stand there is no opportunity to adjust the salaries to the individuals except through the action of Congress in the appropriation bills, or by resignations, deaths, and dismissals occurring from time to time. These means of adjustment are entirely too slow to be effective.

The most gratifying occurrence of the year has been the final settlement of the accounts of our late Disbursing Agent, Mr. W. B. Morgan. The many thousands of dollars at first disallowed in his accounts were restored from time to time, after a most thorough examination in each case, until the amount was reduced to the small sum of $433.64; on reaching this point the Hon. C. S. Fairchild, Secretary of the Treasury, re-instated Mr. Morgan as Disbursing Agent, to date from July 24, 1885, granted him 30 days' leave of absence with full pay, and accepted his resignation when the leave expired. This was not only a triumph for Mr. Morgan but more, for it was a vindication of the Survey as a body, after it had been most sorely tried and cruelly persecuted for three and a half years.

During the fiscal year ending June 30, 1889, the following named persons were employed under my immediate direction:

Dr. Wm. B. French has continued as heretofore to act as my immediate assistant in matters of executive detail, to receive and account to me for all moneys from sales of charts, publications, old property, and other sources. He has aided in the Office correspondence, received all Office bills,

adjusted and arranged them on vouchers in proper form for my approval, and filed a copy of each bill. I wish to express my thanks especially to Dr. French for the satisfactory manner in which he has performed his duties and to commend him to your favorable consideration.

Mr. R. M. Harvey has filed Office correspondence and arranged it for binding, and attended to the shipment and receipt of express matter and registered mail.

Miss S. C. Ayers was engaged on office correspondence until November 19, when she was transferred to the Pension Office.

Miss F. B. Bailey reported for duty July 20 as stenographer and type-writer, and has been engaged constantly since then to the close of the year on Office correspondence, noting letters stenographically and reproducing them on the caligraph. She has also kept the leave of absence account and proved diligent and efficient at all times.

Miss K. Lawn has continued to use a type-writer in miscellaneous copying during the year, and in the preparation of copy for the printer and a variety of current work required of her, and tabular statistical statements, etc.

Miss F. Cadel has also used a type-writer in miscellaneous copying during the year, in preparing circulars to sale agents, and in current work, such as reports from various sources, tabular statements, etc.

Miss C. B. Turnbull has been engaged on miscellaneous copying, addressing envelopes for Notices to Mariners, and bulletins, during the year.

Mrs. J. Wadill copied field records during the year.

Mr. Neil Bryant began work October 1, in miscellaneous copying for this division, and on November 12 was assigned to the Computing Division, where he remained as copyist until January, when he took up some special copying at the Columbian University for this Office. He returned to the Office April 11, remained to the close of the month, and then reported to the Chart Division.

The duties of Clerk in the Superintendent's Office have been performed by Mr. W. B. Chilton and have included the usual correspondence with field officers, with the Departments and Government officers, and with private individuals; instructions to field parties; the preparation of estimates of annual appropriations and of statements required by the Treasury Department, and by Congress, respecting the numbers, grades, and compensations of persons employed in the Survey; the care and preservation of the files and preparation of volumes of correspondence for binding; record of occupation of field officers, record of leaves of absence granted by the Superintendent, and record of changes in the Office and Field force; press copies of correspondence, indexing letter-books; and, during the past three months, the reading of proof and insertion of manuscript corrections in the Pacific Coast Pilot.

The statistics of correspondence for the year are as follows:

| | |
|---|---|
| Letters written—pages press copy | 2,625 |
| Instructions | 916 |
| Acknowledgments of monthly reports | 1,083 |
| Miscellaneous | 389 |
| Total | 5,013 |

Mr. E. Willenbucher, Mr. W. Willenbucher, Mr. Frank Donn, and Mr. E. Hergesheimer, draughtsmen, and Mr. J. H. Roeth, clerk, have been on duty under the Hydrographic Inspector during the fiscal year just ended.

Assistant E. Hergesheimer, Chief of the Drawing Division, died April 23, 1889; of paralysis, after an illnesss of a few days. In him the Survey lost one of its ablest officers, and topographical science in this country one of its most talented and respected members. Officially he was entirely devoted to the Survey. In all things he endeavored to be just and above reproach; personally no man ever had a more sincere and devoted friend than I found in him, and I never more regretted the loss of one.

Mr. Hugo G. Eichholtz, clerk in the Chart Room, died June 18, 1886, from the effect of wounds received while in the discharge of his duty in the U. S. Army during the war of the rebellion.

Although a great sufferer for years, I do not think that any one ever heard him complain or knew him to lose his temper; faithful to himself, his family, his friends, and his official duties, the memory of his virtues will remain with those who knew him as long as they live.

In conclusion, I beg to express to the Chiefs of Divisions and the employés of the Office in general my appreciation of the able support which they have rendered the Survey.

The relations between the Hydrographic Inspector and the Assistant in charge of the Office have continued most cordial, and our co-operation has continued to facilitate the business of the Survey, both in the field and the office.

Yours, respectfully,

B. A. COLONNA,
*Assistant in charge of Office and Topography.*

Prof. T. C. MENDENHALL,
*Superintendent U. S. Coast and Geodetic Survey,*

---

*REPORT OF THE COMPUTING DIVISION, COAST AND GEODETIC SURVEY OFFICE, FOR THE FISCAL YEAR ENDING JUNE 30, 1889.*

COMPUTING DIVISION, COAST AND GEODETIC SURVEY OFFICE,
*June 29, 1889.*

DEAR SIR: In conformity with regulations, I have the honor to submit herewith the usual annual report of work done by the computers and copyists of this Division during the fiscal year ending June 30, 1889.

The charge of the Computing Division was continued with the undersigned. The only change in the *personnel* was the transfer of Mr. F. M. Little to the Tidal Division on December 1, 1888, and the filling of the place on the same day by Mr. J. Page, who, after having served satisfactorily during a six-months probationary term, was given an absolute appointment in this Division. Longitude computations were temporarily provided for by assigning Assistant E. Smith to duty in this Division on November 2, 1888, and assistance was rendered by Mr. N. Bryant, as copyist, between July 6, 1888, and January 22, 1889. The present force of computers is too weak to take up and complete the reduction of the magnetic records at Key West, Fla. (1860–'66), and at Madison, Wis. (1876–'81), and to commence the reduction and discussion of the observations at the magnetic observatory at Los Angeles, Cal. (1882–'89), now about to be transferred to San Antonio, Tex. Competent temporary help would be highly desirable, if no permanent computer can be provided.

Besides directing, distributing, supervising, and reporting the work performed by each computer, matters relating to official correspondence, professional or scientific, were promptly attended to. Among the numerous reports made by me, the following may be specially mentioned as requiring more than usual labor in their preparation: Results of spirit-leveling between Arkansas City and Little Rock, Ark., 1887–'88; Results of spirit-leveling between Mobile, Ala., and Okolona, Miss., 1884–'86–'87; A supplement to report on spirit-levels, vicinity of New York, relating to hydrological problems in New York Bay and Harbor; Paper on the geographical positions in the State of Connecticut, determined by triangulation (uniform with a similar paper for Massachusetts and Rhode Island, in Coast and Geodetic Survey Report for 1885, Appendix No. 8); Report on spirit-leveling between Annapolis, Md., and Washington, D. C., 1875; Report on the adjustment of the primary triangulation of West Virginia (1878–'83); Report on the adjustment of the American Bottom base figure (Illinois and Missouri); Report on the adjustment of the Olney base figure, Illinois, and incorporation of the Lake Survey base into the Coast and Geodetic Survey transcontinental triangulation (this involved the solution of thirty-two equations, with as many unknown quantities); Report on the adjustment of the primary triangulation between the American-Bottom

base and the Olney base (this involved the solution of thirty-three equations, with as many unknown quantities); A series of reports on resulting telegraphic longitudes during the years 1885 and 1886, and one on the longitude of Mount Hamilton, California (Lick Observatory), 1888, and a joint report by myself and Assistant O. H. Tittmann on the relation of the metric units of length of the United States Lake Survey and the Coast and Geodetic Survey. I also found time to compute the astronomical azimuths at Hart, Fla., 1885; Sloop Point, North Carolina, 1888, and Bridgeport, Fla., 1885; prepared drafts of instructions, astronomic, geodetic, and magnetic, for the party or parties to make a preliminary survey of the southeastern boundary of Alaska; and of instructions, astronomic, for the Yukon River and Porcupine River parties to locate the one hundred and forty-first degree of west longitude; also advanced the discussion of the secular variation of the magnetic declination, and collected and arranged by States and by latitude the magnetic declinations at three thousand two hundred stations, preparatory to the construction of a new isogonic map for the United States for the epoch 1890. Professional testimony was given for the District of Columbia in a suit involving the precise location of the Kidwell Meadows. Proof-reading and annual statistics were attended to, as well as the examination of the astronomical, geodetic, and magnetic survey records for completeness; and the maps and charts of the Survey were supplied with the magnetic declinations and other information. On August 23, 1888, I was appointed by the Civil Service Commission a member of the Board of Examiners for computers, and on June 28, 1889, on the Board of Examiners for astronomy. The duties connected with these positions were faithfully discharged.

The work performed by each computer during the fiscal year is herewith presented in detail, and is made up from the daily and monthly reports.

Edward H. Courtenay completed the final adjustment of the triangulations in the State of Connecticut between 1833 and 1886, inclusive, and supervised the manuscript copy of the results made for the printer (the number of geographical positions is eight hundred and seventeen); adjusted and placed on uniform data the tertiary triangulation of the western coast of Florida between Charlotte Harbor and Pensacola Bay, developing the same on the surface of the Clarke spheroid; prepared the abstracts of angles and horizontal directions at primary stations in the vicinity of St. Louis, Mo., 1871 to 1880; made satisfactory progress with the final adjustment of the triangulations of the State of New York; supervised the work of Mr. J. B. Boutelle, and supplied in part that for Mr. C. H. Kummell; directed the work of Mr. W. C. Maupin, and arranged thirty volumes of manuscript computations for binding. Mr. Courtenay also had charge of the geographical registers of the office; assisted in preparing data for field parties and collecting geodetic information needed in connection with the general correspondence of the office; had charge of the duplicate records—astronomical, geodetic, and magnetic—of the Survey; took charge of the Computing Division during my brief absence, and assisted in the preparation of the annual statistics for Superintendent's report.

Myrick H. Doolittle, after returning from leave of absence of two and a half months, computed the tertiary triangulation of the coast of Louisiana between Calcasieu Light and Vermillion Bay, 1884–'85–'86; adjusted the coast triangulation between Cedar Keys and St. Blas, Fla., and computed some supplementary triangulation and a base measured in North Carolina in 1888. Mr. Doolittle then took up the station adjustment of horizontal directions of the triangulation in Illinois and Indiana between 1880 and 1887, inclusive; adjusted the base figure introducing the American Bottom base, Illinois and Missouri, into the main triangulation; also the base figure incorporating the Lake Survey or Olney base, Illinois, into the Coast and Geodetic Survey work, the one computation involving thirty-two, the other thirty-three, conditions to be satisfied; adjusted the second figure of the main triangulation of West Virginia and that part of the transcontinental triangulation lying between the American Bottom and the Olney base, Illinois, involving thirty-three conditions to be satisfied; made satisfactory progress with the local adjustment of horizontal directions at primary stations in Ohio and Kentucky, 1883–'87, and assisted in the preparation of the annual statistics.

Charles H. Kummell was chiefly engaged on the solution of equations in connection with the adjustment of the triangulations of Connecticut; attended to geodetic revisions and check readings; computed the tertiary triangulation coast of Louisiana and of Sabine Pass, and the supple-

mentary triangulation of San Pablo Bay, California, 1886–'87; revised abstracts of horizontal angles at stations of the Hudson River triangulation; computed geographical positions in Pensacola Bay and St. Andrew's Bay, basing them on the Clarke spheroid; verified the sixteen conditional equations about the American Bottom base and independently established the equations about the Olney base, checking Mr. Doolittle's computation; also assisted him in the solution of the thirty-two normal equations; assisted Mr. Courtenay in the solution of normal equations in connection with the final discussion of the triangulations about New York City; also solved equations in connection with my discussion of the secular variation of the magnetic declination, and computed the tertiary local triangulation on Mount Hamilton, California.

Henry Farquhar completed the computation of mean places of latitude stars for the Hawaiian survey 1887, inclusive of proper motion of stars and of probable errors of the declinations; completed the latitude computations of seven secondary stations in Tennessee, Illinois, Indiana and West Virginia, all of 1883; supplied mean places of stars, together with proper motion and probable error of declination for field parties of the survey, submitted a list of stars from the Coast Survey Catalogue of 1876 for re-observation at the U. S. Naval Observatory; computed the latitudes of Bording, Ill., 1882, of Newton, Ill., 1883; made progress with the computation for latitude of Piney, W. Va., 1883, and attended to some miscellaneous computations.

John B. Boutelle was principally engaged in revising abstracts of angles, computing triangle sides, and making position computations in connection with the final adjustment of the triangulations in Connecticut and in New York; made some preliminary computations of positions near the boundary of New Hampshire and Massachusetts; prepared abstracts of angles and computed tertiary positions west coast of Florida, St. Andrew's Bay, Santa Rosa Sound and Pensacola Bay; assisted in selecting descriptions of stations for use by the copyist; revised geodetic data furnished by this Division, and attended to the copying of my reports of a professional or scientific character.

Louis A. Bauer completed the computation of spirit-levels between Citronelle, Ala., and Quitman, Miss., 1887; computed time and azimuth at five tertiary stations, coast of Oregon, 1887, and the time and azimuth at Raccoon Point, and at Deer Island, Louisiana, 1888; computed the azimuth at Overland, Colo., 1881, and the time and azimuth at station Bording, Ill., 1882; put into proper shape for publication the results for spirit-levels up the Mississippi River between New Orleans and Arkansas City, Ark., and to Little Rock, Ark., also the results between Annapolis, Md., and Washington City, and directed the computations made by Mr. F. M. Little; computed the time and azimuth stations Humphreys and Canaday, N. C., 1888, and commenced the revision of longitude computations made by Assistant E. Smith. Mr. Bauer also attended to the following magnetic work: Revised the new collection of all magnetic declinations observed in the United States, as far as known, as arranged by me by States and Territories, and according to latitude for each subdivision; made progress with the reduction of these observations to the epoch 1890, and with plotting the same on the manuscript map on which I had constructed the isogonic curves for the western coast and in part for the eastern coast; computed the magnetic dips and intensities observed by Assistant J. B. Baylor in 1887; computed the magnetic observations made by Assistants G. Davidson, E. Smith, W. Eimbeck, and Subassistant R. A. Marr in 1887–'88–'89, and the observations by the hydrographic parties in southeast part of Alaska during 1886–'87–'88, and made fair progress with the computation of the declinations observed by Assistant J. B. Baylor in 1888.

Frank M. Little completed the computation of the spirit-levels, Wilkerson's Landing, Miss., to Little Rock, Ark., 1887–'88, and of the supplementary spirit-levels between Richmond and Fredericksburg, Va., 1886; computed the spirit-levels between Odin and Villa Ridge, Ill., 1885, and made satisfactory progress with the computation of the levels from Etlah, Mo., to vicinity of Jefferson City, Mo., 1888.

James Page.—During the first six months of his connection with this Division Mr. Page was engaged in a variety of work, composed of abstracts of horizontal angles, computation of triangle sides and geographical positions; of tertiary triangulations vicinity of New York, N. Y., St. Louis, Mo., St. Andrew's and Choctawhatchee Bays, Florida; various geodetic revisions, also solution of normal equations in connection with my magnetic researches. Mr. Page made satisfactory progress with the computation of the supplementary triangulation, vicinity of Charleston, S. C., 1889, and revised the reduction of magnetic declinations for epoch 1890 and their plotting.

William C. Maupin was engaged in copying geographical positions and descriptions of stations, with tracings of sketches for field parties; inserting geodetic results in the registers, conversions of measures, miscellaneous copying of records, and revisions.

Temporary assistance was rendered by Assistant E. Smith, who was engaged in making the second or office reduction of the following differences of telegraphic longitudes: Colorado Springs, Colo., and Kansas City, Mo., 1885; Fort Wallace and Ellsworth, Kans., 1885; Colorado Springs, Colo., and Wallace, Kans., 1886; Colorado Springs, Colo., and Salt Lake City, Utah, 1886; Colorado Springs, Colo., and Santa Fé, N. Mex., 1886; Colorado Springs and Grand Junction, Colo., 1886; Colorado Springs and Gunnison, Colo., 1886; San Francisco, Lafayette Park Observatory, California, and Mount Hamilton, California, 1888; Salt Lake City and Ogden, Utah, 1886; Galveston, Tex., and Little Rock, Ark., 1885, and Kansas City, Mo., and Little Rock, Ark., 1885. He completed the computation for telegraphic longitude of the secondary stations, Brownsville, Tex. (from Galveston), 1885, and Texarkana and Fort Smith, Ark. (from Little Rock), 1885.

Neil Bryant was engaged in copying records and results for the use of field parties.

I remain, sir, yours respectfully,

CHAS. A. SCHOTT,
*Assistant, in charge Computing Division.*

Mr. B. A. COLONNA,
*Assistant in charge of Office and Topography.*

---

*REPORT OF THE DRAWING DIVISION, COAST AND GEODETIC SURVEY OFFICE, FOR THE YEAR ENDING JUNE 30, 1889.*

DRAWING DIVISION, COAST AND GEODETIC SURVEY OFFICE,
*Washington, D. C., July* 1, 1889.

DEAR SIR: I have the honor to present herewith the report of the Drawing Division for the year which has just closed:

Assistant E. Hergesheimer, who so ably conducted the Division, died on April 23, and on the 1st of May I was assigned to take charge.

The limited time it has been under my direction will necessarily make this report mostly statistical, the items being taken from the daily journal of occupation of each draughtsman. The assignment of work has been virtually the same as during the preceding year.

A. Lindenkohl has been employed on hydrographic reductions, corrections, and additions to published charts, answering calls for information, preparing progress sketches for the Annual Report, getting data and copies of work of United States Engineers, and has at various times had the direction of the work of the Division during the absence of its chief.

H. Lindenkohl, upon finished drawings for photolithographing and all kinds of urgent work requiring the immediate attention of a skilled draughtsman. He has also, as usual, done the regular amount of lithographing for the Annual Report.

E. H. Fowler has been engaged in reductions for engraving and photolithographing, projections, verifications, and corrections.

E. J. Sommer on reductions for engraving and photolithographing, projections, and verifications.

P. Erichsen in inking topographical sheets, measuring areas of engraved work, and tracings of District of Columbia survey.

E. Molkow in reductions for harbor charts for engraving, inking topographical sheets, projections, and in measuring areas of engraved work, and topographical surveys.

C. Mahon was employed upon hydrographic and topographic reductions, lettering plane-table sheets, etc.

E. A. Trescot upon drawings of charts and diagrams for photolithographing, putting registered numbers on original topographic and hydrographic sheets, registering same in the Division, and clerical work.

J. Olberg upon tracings, lettering, numbering charts, copies of field sketches, etc. He resigned on the 31st of January.

W. H. Benton, mostly on drawings of charts for photolithographing.

H. J. Schneider in making miscellaneous tracings, especially those to answer calls by private parties for copies of original surveys. He was dismissed from the service on the 31st of October.

D. M. Hildreth was appointed draughtsman on the 30th of November, after passing Civil Service examination. He has since been engaged in drawing for photolithographing and registering original sheets.

M. P. Jackson also passed the Civil Service examination, and was given employment on the 8th of December. His principal work has been on tracings for the "Northwestern Naval Site Commission," and field progress sketches.

Mr. W. I. Vinal, Assistant Coast and Geodetic Survey, was attached to the Division from February 1 to June 4, and rendered very important service in making a catalogue of the original sheets and drawings, so far as the time would allow.

The statements following show the catalogue numbers and titles of charts published by photolithography, and from engraved plates, for which the drawings were revised and completed during the year; the numbers and titles of charts, the drawings for which were completed but not published, and the numbers and titles of charts, the drawings of which corrections and additions were made during the fiscal year.

I can hardly speak in too high terms of the fidelity and care of the more experienced draughtsmen, particularly Messrs. A. and H. Lindenkohl, who by long service have acquired a wonderful facility in preparing the field-work for publication. The improvement of the younger draughtsmen has been very gratifying, and is evidently the result of an earnest desire to excel and of the example of those more proficient.

With pleasure I note the evidences of a uniform disposition in each and all to discharge their duties promptly and well.

Yours, respectfully,

W. H. DENNIS.
*Assistant, U. S. Coast and Geodetic Survey,*
*In charge of Drawing Division.*

Mr. B. A. COLONNA,
*Assistant in charge of Office and Topography.*

## DRAWING DIVISION.

*Catalogue numbers and titles of new charts, the drawings of which were revised and completed and the charts published by photolithography during the fiscal year* 1888–'89.

| No. | Title. | No. | Title. |
|---|---|---|---|
| Sec. 1[illegible] | Map of District of Columbia. | 693 | Eel River, California. |
| Sec. 18[illegible] | Map of District of Columbia. | 704 | Brown Cove, Alaska. |
| 119 | Fire Island Beach to Rockaway Beach. | 705 | Frederick Sound, etc., Alaska. |
| 361[6] | North Shore, Long Island Sound (part of). | 712 | St. John's Harbor, Alaska. |
| 384[2] | Baltimore Harbor, Maryland. | 716 | Steamer Bay, Alaska. |
| 385 | Annapolis Harbor, Maryland. | 717 | Ratz Harbor, Alaska. |
| 422 | New River Inlet, North Carolina. | 718 | Dewey Anchorage, Alaska. |
| 491[1] | Mobile River, Alabama. | 719 | Red Bay, Alaska. |
| 491[2] | Mobile River, Alabama. | 720 | Port McArthur, Alaska. |
| 491[3] | Mobile River, Alabama. | 721 | Port Protection, Alaska. |
| 491[6] | Mobile River, Alabama. | 729 | Etolin Harbor, Alaska. |
| 491[8] | Mobile River, Alabama. | 730 | Shakan Strait, Alaska. |
| 491[9] | Mobile River, Alabama. | 800 | Wrangell Strait, Alaska. |
| 519 | Sabine Pass, Texas. | 821 | Captain's Bay, Alaska. |
| 522 | Brazos River, Texas. | 823 | Akun Cove, Alaska. |
| 522*a* | Pass Cavallo, Texas. | 3035*b* | Dermott map of District of Columbia. |
| 616 | Lompoc Landing, California. | — | Isogonic map United States, 1885. |
| 636 | Coquille River Entrance, Oregon. | — | Anchorage ground, New York Harbor. |
| 651 | Seattle Harbor, Washington. | — | Part of 8[a] for Coast Pilot. |
| 660 | Nestuggah Harbor, Oregon. | — | Kings Plats, District of Columbia, in 16 sheets. |
| 668 | Santa Monica, Cal. | | |

Total number of drawings completed for new photolithographic charts published during the year, 56.

*Catalogue numbers and titles of charts, the drawings for second editions of which were revised and the charts published by photolithography during the year.*

| No. | Title. | No. | Title. |
|---|---|---|---|
| 114a | Eastern part Long Island Sound. | 643 | Gray's Harbor, Washington. |
| 510a | Jamaica Bay, New York. | 684 | Sea-coast and interior harbors, Washington. |

Total number of these drawings, 4.

*Catalogue numbers and titles of charts, the drawings of which, for publication by photolithography, were completed, but not published for want of funds.*

| No. | Title. | No. | Title. |
|---|---|---|---|
| 343 | Nantucket Harbor, Massachusetts. | 491[4] | Mobile River, Alabama. |
| 347 | Vineyard Haven, Massachusetts. | 491[5] | Mobile River, Alabama. |
| 404 | Norfolk Harbor, Virginia. | 491[7] | Mobile River, Alabama. |
| 733 | Thomas, Farragut, etc., Bays, Alaska. | 518 | Calcasieu Pass, Louisiana. |

Total number of these drawings, 8.
Whole number of drawings of charts for publication by photolithography completed during the year, 68.

*Catalogue numbers and titles of charts the drawings of which were revised and completed and the charts published from engraved plates during the year.*

| No. | Title. | No. | Title. |
|---|---|---|---|
| 17 | Tampa Bay to Cape San Blas. | 368 | Huntington Bay, Long Island Sound. |
| 102 | Little River to Petit Manan, Maine. | 401[b] | Part of James River, Virginia. |
| 114 | Eastern end Long Island Sound. | 401[c] | Part of James River, Virginia. |
| 147 | Core Sound to Bogue Inlet, North Carolina. | 601 | San Diego to Point Arena, California. |
| 151 | Little River Inlet, etc., North Carolina. | 602 | San Francisco Bay to Straits of Juan de Fuca. |
| 178 | Hog Island to Walls Creek, Florida. | 610 | Wilmington and San Pedro Harbors. |
| 187 | Pensacola Bay to Mobile Bay. | 669 | San Luis Obispo Bay, etc. |
| 367 | Oyster Bay, Long Island Sound. | | |

Number of finished drawings for charts published during the year from engraved plates, 15.

*Additional drawings made during the year for new editions of charts published from engraved plates.*

| No. | Title. | No. | Title. |
|---|---|---|---|
| 111 | Monomoy and Nantucket Shoals. | 420 | Beaufort Harbor, North Carolina. |
| 118 | Middle sheet, south shore Long Island. | 447 | St. Simon's Sound, Georgia. |
| 119 | Western sheet, south shore Long Island. | 520 | Galveston entrance, Texas. |
| 204 | Galveston Bay, Texas. | 701 | Dixon entrance to Cape St. Elias. |
| 397 | Rappahannock River (part of). | | |

Number of these additional drawings, 9.

*Drawings completed for charts the engraved plates of which were in hand during the year.*

| No. | Title. | No. | Title. |
|---|---|---|---|
| 31 | Montauk Point to New York. | 304 | Moos-a-bec Reach, Maine. |
| 146 | Cape Lookout, North Carolina. | 359 | New London Harbor, Connecticut. |
| 148 | Bogue Inlet to Topsail Inlet, North Carolina. | 516 | Atchafalaya Bay, Louisiana. |
| 149 | Topsail Inlet to Cape Fear, North Carolina. | 671 | San Diego to Santa Monica. |
| 179 | Walls Creek to Cedar Keys. | | |

Number of these completed drawings, 9.

SUMMATION, 1888-'89.

| | |
|---|---|
| Drawings revised and completed for charts published or made ready for publication during the year by photolithography | 68 |
| Drawings revised and completed for charts published or made ready for publication during the year from engraved plates | 33 |
| Total number of drawings completed | 101 |
| Total number of drawings in hand | 27 |
| Drawings completed and in hand, general total | 128 |

*Corrections and additions to drawings of charts during the year ending June 30, 1889.*

1. Topography. 2. Hydrography.

| No. | Titles of Charts. | Scale. | Draughtsmen. | Remarks. |
|---|---|---|---|---|
| | SAILING CHARTS. | | | |
| A | Cape Sable to Cape Hatteras | 1 1200000 | 2. A. Lindenkohl; 1. E. Molkow | Corrections and additions. |
| B | Cape Hatteras to Key West | 1-1200000 | 2. A. Lindenkohl | Do. |
| D | Gulf of Mexico and Straits of Florida | 1-210000 | 2. A. Lindenkohl | Additions. |
| 3 | Cape Hatteras to Mosquito Inlet | 1-1200000 | 2. A. Lindenkohl | Corrections and additions. |
| 601 | San Diego to Point Arena | 1-1200000 | 2. A. Lindenkohl; 2. H. Lindenkohl | Do. |
| 602 | San Francisco to the Strait of Juan de Fuca | 1-1200000 | 2. A. Lindenkohl | Do. |
| 700 | Cape Flattery to Dixon entrance | 1-1200000 | 1, 2. A. Lindenkohl; 1, 2. H. Lindenkohl. | Do. |
| 701 | Dixon entrance to Cape St. Elias | 1-1200000 | 1, 2. H. Lindenkohl | Do. |
| | GENERAL CHARTS OF THE COAST. | | | |
| 6 | Isle au Haut to Cape Cod | 1-400000 | 1. A. Lindenkohl | Corrections and additions. |
| 7 | Cape Ann to Gay Head | 1-400000 | 1, 2. A. Lindenkohl | Do. |
| 8 | Block Island to Cape May | 1-400000 | 2. A. Lindenkohl | Do. |
| 10 | Cape Henry to Cape Lookout | 1-400000 | 1. H. Lindenkohl; 1. E. H. Fowler | Do. |
| 15 | Straits of Florida | 1-400000 | 2. A. Lindenkohl; 1. P. Erichsen | Additions. |
| 19 | Mobile Bay to Atchafalaya Bay | | 1. E. J. Sommer | In progress. |
| 20 | Atchafalaya Bay to Galveston | | 2. A. Lindenkohl; 1. E. H. Fowler; 1. E. J. Sommer. | Do. |
| 21 | Galveston to the Rio Grande | 1-400000 | 1. E. J. Sommer | Corrections. |
| 31 | Approaches to New York | 1-200000 | 1. H. Lindenkohl | Finished. |
| 671 | San Diego to Santa Monica | 1-200000 | 1, 2. A. Lindenkohl; 1, 2. H. Lindenkohl; 1. E. H. Fowler; 1, 2. C. Mahon; 1. E. J. Sommer. | Do. |
| 675 | Point Pinos to Bodega Head | 1-200000 | 2. A. Lindenkohl; 2. E. J. Sommer; 1, 2. P. Erichsen; 1, 2. E. A. Trescot | Corrections and additions. |
| 676 | San Francisco to Point Arena | 1-200000 | 1. H. Lindenkohl | Corrections. |
| 678 | Cape Mendocino to N. W. Seal Rock | 1-200000 | 2. H. Lindenkohl; 1. E. H. Fowler | In progress. |
| 679 | N. W. Seal Rock to Umpquah River | 1-200000 | 1, 2. A. Lindenkohl | Do. |
| | COAST AND HARBOR CHARTS. | | | |
| 101 | West Quoddy Head to Little River | 1-80000 | 1. H. Lindenkohl; 1. E. H. Fowler | Finished. |
| 304 | Cross Island to Nash Island | 1-40000 | 2. A. Lindenkohl | Do. |
| 318 | Bar Harbor | 1-10000 | 2. E. A. Trescot | Corrections. |
| 105 | Penobscot Bay to Kennebec entrance | 1-80000 | 2. H. Lindenkohl | Do. |
| 312 | St. George's River and Muscle Ridge Channel | 1-40000 | 2. H. Lindenkohl | Corrections and additions. |
| 314 | Kennebec and Sheepscot Rivers | 1-40000 | 2. H. Lindenkohl | Corrections. |
| 111 | Monomoy and Nantucket Shoals to Muskeget Channel | 1-80000 | 2. H. Lindenkohl; 1. E. H. Fowler | Corrections and additions. |
| 112 | Muskeget Channel to Buzzard's Bay and entrance to Vineyard Sound. | 1-80000 | 2. A. Lindenkohl; 1. E. A. Trescot | Do. |
| 113 | Cuttyhunk to Block Island including Narragansett Bay | 1-80000 | 1, 2. E. H. Fowler | Do. |
| 347 | Vineyard Haven, Mass | 1-10000 | W. H. Benton | Photolithographic tracing completed. |
| 353 | Narragansett Bay | 1-40000 | 2. E. J. Sommer; 2. J. Olberg | Corrections and additions. |
| 114 | Point Judith and Block Island to Plum Island | 1-80000 | 2. A. Lindenkohl; 1. E. H. Fowler; 1, 2. E. J. Sommer; 1, 2. E. A. Trescot. | Do. |
| 358 | Fisher's Island Sound | 1-40000 | 1, 2. H. Lindenkohl | Correction. |
| 359 | New London Harbor and entrance to Thames River | 1-20000 | 1, 2. H. Lindenkohl; 1. E. Molkow; 2. E. A. Trescot. | Corrections and additions; finished. |
| 356 | Block Island | 1-10000 | 1, 2. E. H. Fowler | Corrections. |
| 116 | Welch's Point to New York | 1-80000 | 2. A. Lindenkohl | Corrections and additions. |
| 361 | East of New Rochelle | 1-10000 | 1, 2. H. Lindenkohl | Photolithographic tracing completed. |
| 363 | Black Rock Harbor | 1-10000 | 1, 2. D. M. Hildreth | Photolithograph, finished. |
| 367 | Oyster or Syosset Harbor | 1-30000 | 1, 2. C. Mahon | Corrections and additions. |
| 368 | Huntington Bay | 1-30000 | C. Mahon | Correction. |
| 119 | Great South Bay, Fire Island, and Long Beach | 1-80000 | 1, 2 E. Molkow; 1. C. Mahon | New edition; finished. |
| 540a | Jamaica Bay and Rockaway Inlet | 1-25000 | 2. H. Lindenkohl; 1. W. H. Benton | Corrections and additions. |

*Corrections and additions to drawings of charts during the year ending June* 30, 1889—Continued.

| No. | Titles of Charts. | Scale. | Draughtsmen. | Remarks. |
|---|---|---|---|---|
| | COAST AND HARBOR CHARTS—continued. | | | |
| 120 | New York Bay and Harbor | 1-80000 | 2. A. Lindenkohl; 1, 2. H. Lindenkohl | Corrections and additions. |
| 369 | New York Bay and Harbor | 1-40000 | 2. A. Lindenkohl; 1. H. Lindenkohl; 2. E. J. Sommer; 1, 2. P. Erichsen. | Do. |
| 121 | Sandy Hook to Barnegat Inlet | 1-80000 | 2. A. Lindenkohl | Corrections. |
| 126 | Upper Sheet Delaware River, Port Penn to Trenton | 1-80000 | 2. H. Lindenkohl | Do. |
| 376 | Delaware and Chesapeake Bays | 1-400000 | 1. H. Lindenkohl; 1. E. H. Fowler | Finished. |
| 136 | No. 3, Magothy River to head of bay | 1-80000 | 1, 2. H. Lindenkohl; 1, 2. E. J. Sommer | Corrections. |
| 384[2] | Baltimore Harbor | 1-10000 | 2. A. Lindenkohl; 1, 2. H. Lindenkohl | Finished. |
| 385 | Annapolis Harbor | 1-10000 | 1, 2. H. Lindenkohl | Photolithographic tracing, new edition, completed. |
| 392 | No. 1, Rappahannock River, entrance to Deep Creek | 1-60000 | 2. E. H. Fowler | Corrections. |
| 393 | No. 2, Deep Creek to Occupacia Creek | 1-60000 | 2. E. H. Fowler | Do. |
| 394 | No. 3, Occupacia Creek to Saunders Wharf. | 1-20000 | 2. E. H. Fowler | Do. |
| 395 | No. 4, Saunders Wharf to Port Royal | 1-20000 | 2. E. H. Fowler | Do. |
| 397 | No. 6, Moss Neck to Fredericksburgh | 1-40000 | 2. E. H. Fowler | Do. |
| 404 | Norfolk Harbor | 1-10000 | 1, 2. H. Lindenkohl; 1, 2. E. J. Sommer | Photolithograph, new edition, completed. |
| 137 | Cape Henry to Currituck Beach | 1-80000 | 2. H. Lindenkohl | Additions. |
| 140 | Albemarle Sound, Eastern sheet, Atlantic Ocean to Pasquotank River. | 1-80000 | 1, 2. A. Lindenkohl; 1. H. Lindenkohl. | Corrections. |
| 141 | Western sheet: Pasquotank River to Roanoke and Chowan River. | 1-80000 | 1, 2. A. Lindenkohl | Do. |
| 144 | No. 3. Pamplico River | 1-80000 | 1. H. Lindenkohl | Additions. |
| 146 | Ocracoke Inlet to Beaufort, N. C | 1-80000 | 1, 2. C. Mahon | Finished. |
| 147 | Cape Lookout to Bogue Inlet | 1-80000 | 1. A. Lindenkohl; 1, 2. H. Lindenkohl; 1. E. J. Sommer. | Do. |
| 148 | Bogue Inlet to New Topsail Inlet | 1-80000 | 1, 2. A. Lindenkohl; 1. E. H. Fowler; 1. E. J. Sommer. | Do. |
| 149 | Old Topsail Inlet to Cape Fear | 1-80000 | 1, 2. A. Lindenkohl; 1. E. J. Sommer; 1, 2. C. Mahon. | Do. |
| 150 | Masonboro Inlet to Shallotte Inlet, including Cape Fear. | 1-80000 | 1 E. H. Fowler; 1. E. J. Sommer | Corrections. |
| 156 | Savannah to Sapelo Island | 1-80000 | 1, 2. A. Lindenkohl; 1. E. A. Trescot; 1, 2. M. P. Jackson. | Do. |
| 440 | Tybee Roads, Savannah River, and Wassaw Sound | 1-40000 | 1, 2. A. Lindenkohl; 1, 2. M. P. Jackson. | Corrections and additions. |
| 157 | Sapelo Island to Amelia Island | 1-80000 | 2. A. Lindenkohl; 1. C. Mahon | Corrections. |
| 447 | St. Simon's Sound, Brunswick Harbor, and Turtle River. | 1-40000 | 1, 2. A. Lindenkohl | Do. |
| 158 | St. Mary's entrance southward to latitude 30° west | 1-80000 | C. Mahon | Additions. |
| 164 | Jupiter Inlet to Hillsboro Inlet | 1-80000 | 1. A. Lindenkohl | Corrections. |
| 168 | Long Key to Newfound Harbor Key | 1-80000 | 2. A. Lindenkohl | Corrections and additions. |
| 169 | Newfound Harbor Key to Boca Grande Key | 1-80000 | 2. A. Lindenkohl | Do. |
| 173 | Seminole Point to Big Marco Pass | 1-80000 | 1. E. H. Fowler | In progress. |
| 174 | Big Marco Pass to San Carlos Bay | 1-80000 | 1, 2. E. H. Fowler | Completed. |
| 175 | San Carlos Bay to Lemon Bay, including Charlotte Harbor. | 1-80000 | 1, 2. E. J. Sommer | Corrections and additions. |
| 475 | Caloosa entrance | 1-40000 | 1. E. J. Sommer | Correction. |
| 179 | Wall's Creek to Cedar Keys | 1-80000 | 1, 2. H. Lindenkohl; 1. P. Erichsen; 1. E. Molkow. | Finished. |
| 186 | Choctawhatchee Inlet to Pensacola entrance | 1-80000 | 1. E. H. Fowler | Corrections. |
| 187 | Pensacola Bay to Mobile Bay | 1-80000 | 1, 2. A. Lindenkohl | Finished. |
| 191 | Lakes Borgne and Pontchartrain | 1-80000 | 1. E. H. Fowler | Corrections. |
| 199 | Point au Fer to Cote Blanche, including Atchafalaya Bay. | 1-80000 | 1, 2. E. A. Trescot; 1, 2. W. H. Benton. | In progress. |
| 516 | Atchafalaya Bay | 1-50000 | 2. A. Lindenkohl; 2. H. Lindenkohl; 1, 2. C. Mahon; 1, 2. W. H. Benton. | Corrections. |
| 200 | Gulf coast, vicinity of Vermilion Bay | 1-80000 | 2. E. A. Trescot | In progress. |
| 204 | Galveston Bay | 1-80000 | 1, 2. A. Lindenkohl | Correction. |
| 520 | Galveston entrance | 1-40000 | 1, 2. A. Lindenkohl | Do. |
| 518 | Calcasieu Pass | 1-20000 | 1, 2. E. J. Sommer | Photolithograph, completed. |

*Corrections and additions to drawings of charts during the year ending June* 30, 1889—Continued.

| No. | Titles of charts. | Scale. | Draughtsmen. | Remarks. |
|---|---|---|---|---|
| | COAST AND HARBOR CHARTS—continued. | | | |
| 519 | Sabine Pass | 1-20000 | 1, 2. H. Lindenkohl | Photolithograph, finished. |
| 522 | Brazos River | 1-10000 | 1, 2. A. Lindenkohl; 1, 2. H. Lindenkohl; 1, 2. W. H. Benton. | Do. |
| 522a | Pass Cavallo | 1-30000 | 1, 2. W. H. Benton | New edition, photolithograph, finished. |
| 606 | San Diego Bay | 1-40000 | 1, 2. A. Lindenkohl | Corrections. |
| 609 | San Juan Capistrano | 1-10000 | 1, 2. H. Lindenkohl | Completed. |
| 616 | Lompoc Landing | 1-5000 | 1, 2. H. Lindenkohl; 1, 2. E. H. Fowler; 1, 2. J. Olberg. | Photolithograph, finished. |
| 611 | Santa Barbara | 1-20000 | 1, 2. E. J. Sommer | Corrections. |
| 669 | San Luis Obispo and approaches | 1-20000 | 1, 2. W. H. Benton | Corrections and additions. |
| 621 | San Francisco Bay Entrance | 1-50000 | 1, 2. H. Lindenkohl | Corrections. |
| 695 | Cape Mendocino | 1-40000 | ....do | Photolithograph, in progress. |
| 693 | Eel River | 1-20000 | 1, 2. H. Lindenkohl; 1, 2. W. H. Benton. | Photolithograph, finished. |
| 667 | Hunter's Cove and Mack's Reef | 1-12500<br>1-25000 | 1, 2. H. Lindenkohl | Corrections and additions. |
| 634 | Cape Orford and Reef | 1-40000 | 1, 2. A. Lindenkohl | Corrections. |
| 636 | Coquille River Entrance | 1-10000 | 1, 2. H. Lindenkohl; 1, 2. E. A. Trescot. | Photolithograph, finished. |
| 664 | Yaquina River entrance | 1-20000 | 1, 2. A. Lindenkohl | Corrections. |
| 669 | Nestuggah Bay | 1-10000 | 1, 2. E. J. Sommer | Photolithograph, finished. |
| 684 | Sea-Coast and Interior Harbors of Washington, from Gray's Harbor to Olympia, including Washington Sound. | 1-300000 | 1. A. Lindenkohl; 2. H. Lindenkohl; 1. E. Molkow; 1, 2. C. Mahon. | Corrections and additions. |
| 643 | Gray's Harbor | 1-40000 | 2. E. H. Fowler | Corrections and additions, new edition. |
| 645 | Cape Flattery and Ne-ah Harbors | 1-10000 | 1, 2. E. J. Sommer | Photolithograph, new edition, finished. |
| 651 | Seattle Harbor | 1-20000 | 1. H. Lindenkohl | Corrections, finished. |
| 706 | Sumner Strait | 1-200000 | 1, 2. H. Lindenkohl | Photolithograph, corrections and additions. |
| 705 | Frederick Sound | 1-200000 | ....do | Do. |
| 704 | Brown Cove | 1-5000 | 1, 2. W. H. Benton | Photolithograph, finished. |
| 969 | Alaska and adjoining territory | 1-3000000 | 1, 2. H. Lindenkohl | Corrections and additions. |
| 712 | St. John's Harbor | 1-20000 | ....do | Finished. |
| 716 | Steamer Bay, Etolin Island | 1-20000 | ....do | Photolithograph, finished. |
| 717 | Ratz Harbor, Prince of Wales Island | 1-10000 | ....do | Do. |
| 719 | Red Bay, Prince of Wales Island | 1-10000 | ....do | Do. |
| 720 | Port McArthur | 1-10000 | 1, 2. H. Lindenkohl; 1, 2. E. J. Sommer. | Do. |
| 800 | Wrangell Strait and Duncan Canal | 1-40000 | 1, 2. H. Lindenkohl | Finished. |
| 823 | Akun Cove, Akun Island | 1-10000 | 1, 2. W. H. Benton | Photolithograph, finished. |
| 686 | Puget Sound | 1-80000 | 1. A. Lindenkohl; 1, 2. H. Lindenkohl. | In progress. |
| 733 | Farragut and Portage Bays | 1-40000 | 1, 2. H. Lindenkohl | Finished. |
| 343 | Nantucket Harbor, Massachusetts | | 1, 2. W. H. Benton | Photolithograph, finished. |
| 199 | Atchafalaya River | 1-80000 | 1. E. H. Fowler | Do. |
| 661 | Point Arena, California | 1-200000 | 1, 2. E. A. Trescot | Do. |
| 683 | Strait of Juan de Fuca and Washington Sound | 1-200000 | 1, 2. A. Lindenkohl; 1, H. Lindenkohl; 1, 2. C. Mahon. | Do. |

*ANNUAL REPORT OF THE ENGRAVING DIVISION, COAST AND GEODETIC SURVEY OFFICE, FOR THE FISCAL YEAR ENDING JUNE 30, 1889.*

U. S. COAST AND GEODETIC SURVEY OFFICE,
*Washington, D. C., August 20, 1889.*

SIR: I respectfully submit the following report on the operations of the Engraving Division during the fiscal year ending with June 30, 1889.

The statistics are as follows:

ENGRAVING.

| | |
|---|---|
| Number of new charts published: | |
| Printed from copper plates | 5 |
| Printed from transfers to stone | 1 |
| Number of new editions of charts published | 8 |
| Number of new charts commenced | 9 |
| Number of new editions of charts commenced | 9 |
| Number of new sketches and illustrations commenced | 5 |
| Number of plates of charts corrected for printing | 670 |
| Number of plates of sketches and illustrations corrected for printing | 12 |
| Number of new charts in progress, continued from preceding years | 14 |
| Number of new editions of charts in progress, continued from preceding years | 5 |
| Number of unfinished plates on hand June 30, 1889: | |
| New charts | 30 |
| New editions of charts | 11 |
| Sketches and illustrations | 24 |

ELECTROTYPING

| | | |
|---|---|---|
| Number of pounds of copper deposited | | 2,096¾ |
| Number of square inches on which deposit was made | | 87,602 |
| Number of copper plates made: | | |
| Basso | 36 | |
| Alto | 48 | |
| | | 84 |

This includes sixteen thin alto plates, to be used in patching and cutting up for page plates of the chart catalogue.

PHOTOGRAPHING.

| | |
|---|---|
| Number of negatives made | 274 |
| Number of prints | 710 |

PRINTING.

| | |
|---|---|
| Number of impressions for— | |
| Chart Room | 39,754 |
| Assistant in charge of Office | 1,447 |
| Engraving Division | 1,717 |
| Hydrographic Inspector | 1,531 |
| Lithographers' transfer proofs | 44 |
| Atlantic Coast Pilot | 58 |
| Total number of impressions | 44,551 |

The impressions for the Chart Room were taken from seven hundred and ninety-two plates, of which number six hundred and seventy required miscellaneous corrections applied to them before the impressions could be taken.

The engravers were employed during the year principally as follows: H. M. Knight, A. Petersen, J. G. Thompson, and R. F. Bartle, jr., on lettering; H. T. Knight and H. L. Thompson on outlines and lettering; W. A. Thompson, R. F. Bartle, and H. C. Evans on topography and sand; Joseph Enthoffer and E. J. Enthoffer on topography; E. H. Sipe on miscellaneous corrections and lettering, and T. Wasserbach and W. H. Davis on miscellaneous corrections and additions.

There have also been employed at different times during the year, under the appropriations for extra engraving, J. P. Cox and J. C. Entwistle on lettering and E. J. Enthoffer on topography. On October 5, 1888, the force of the Division was increased by the employment of Messrs. William A. Van Doren, E. A. Kubel, A. H. Sefton, and J. S. Carman, in conformity with the provisions of the appropriation act. Three of these young gentlemen had received a little instruction in the art before accepting employment in the Office, but it is most pleasing for me to be able to report that all of them have developed a talent for their work that promises most satisfactory results in the future. Their progress is already so marked that I have employed three of them on certain classes of work, and the fourth has advanced to the point when his services will also be available. I fully anticipate that the product of these young gentlemen's labors during the coming year will show a material increase in the completion of engravings.

All of the engravers have been employed at different times during the year on the miscellaneous corrections and additions required on the printing plates, arising from changes in aids to navigation, etc. This is a class of work that is very exacting, as it does not admit of material delay, and it must take precedence over the production of original matter, for the reason that the published charts should be maintained as nearly correct as our information will permit. So great is the volume of this class of work that its consideration is one of prime importance; on several occasions nearly every engraver in the Office has been engaged upon it at the same time, causing the stoppage of nearly all original work and consequent delay in the production of new charts urgently demanded. Nor does the volume seem to decrease. Of the seven hundred and ninety-two plates printed during the year 84.6 per cent. required correction; for the preceding year six hundred and sixty-four plates were printed, of which 83.8 per cent. required correction; this shows the percentage of plates printed that required correction about the same for each year, but there were actually one hundred and thirteen more plates corrected in 1889 than in 1888, an increase of 20 per cent. It should be observed, however, that the labor involved in correcting this larger number of plates was only 14½ per cent. greater than in the preceding year, showing that the average corrections to a single plate were less than for the year before. This class of work consumed the time of four engravers during the year, against an average of three and a half for a number of preceding years.

This subject was brought to the attention of the late Superintendent three years ago, when a provision to reduce the force of engravers had been introduced into the appropriation bill for the support of the Survey. Careful estimates made at that time indicated that when the scheme of charts for the coasts should be completed the whole force of engravers employed in the Office would be required to maintain the plates in condition for printing. Later experience has satisfied me that this estimate can not be modified and may have to be increased. I would also recall to you the reference made to this subject in my Annual Report for 1887.

During the past year considerable increase was made to the product, by the work obtained in "extra engraving" paid for out of the deficiency bills for the fiscal years 1888 and 1889. The deficiency for 1888 became available only three months before the close of the year and, therefore, did not essentially affect the product of that year, but many engravings were so materially advanced by the expenditure that I was enabled to finish a larger number of plates in the past year than during any year of which I have record. These deficiency bills and the addition of the four young men to the force of engravers last October, have been the only measures of assistance furnished to this Division in many years; and it should be observed that the increased force provided last year will have no appreciable effect upon the work of the Division until the current year. The numerous corrections applied to the printing plates have a deleterious effect upon the plates, causing the engravings to wear more rapidly and necessitate their more frequent reproduction by electrotyping, and as nearly every correction made during the life of a plate must be applied to the electrotype copy made from the preserved Alto, it is evident that the reproduction of a printing plate may be a work of considerable labor. These reproductions also require the

work of skilled engravers, as the changes involved may necessitate matching many varieties in style of engraving. The making of new printing plates has been almost suspended during the year in the effort to supply what have been considered more important demands, but it is essential such labor should be resumed at an early date if the utility and appearance of the charts is to be preserved. In view of the circumstances thus briefly outlined I hope the recommendation to increase the force of the Division will meet with your approval.

The year's work has added a number of important charts to the Catalogue; among them the General Coast Chart from Tampa Bay to Cape San Blas, Florida; the Coast Charts from Little River to Petit Manan, Maine, a preliminary edition of Block Island Sound, the vicinity of Cape Lookout Shoals and approaches to Beaufort Entrance, North Carolina, Anclote Anchorage and the Banks to the northward, Florida; new sailing charts of the Pacific coast from San Diego to the Strait of Juan de Fuca, and the harbor chart of San Pedro Bay, California. Work was commenced during the year on a new series of sailing charts of the Atlantic coast, and the Coast Charts of Long Island Sound showing the results of the resurvey recently completed; steady progress was also made on the new edition of the chart of New York Harbor, from the recent resurvey, which is now about ready for publication.

The work of the Electrotype and Photograph Rooms has been continued under Mr. D. C. Chapman, assisted by Mr. L. P. Keyser. The weight of copper deposited was 23 per cent. greater than last year; this increase was due entirely to the greater number of plates required for our own use during the year, no outside electrotyping having been done. Experiments have been made by Mr. Chapman during the past six months with a view to securing a hard electro-deposit that might be substituted for hammered copper; he has been in a measure successful, but the limited time he can devote to such experiments and the difficulties to be overcome render the progress very slow. As the ordinary galvanometers we have heretofore had in use with our batteries have been found practically valueless for the measurement of such large currents with small electro-motive force as are developed under the conditions of our work, Mr. Chapman has devised and constructed a new and simple form of galvanometer that seems to meet our requirements. Experiments are now being made with this instrument that I hope will prove of value for this class of work. The system of mounting photograph reductions to scale introduced three years ago, is proving more valuable with each new experience; it has been found practicable to preserve the curvature of the projections in reducing to small scales, and as perfect a reduction can now be made from a printed chart with distorted projection as could formerly be procured from an accurate drawing. The services of Mr. L. P. Keyser, the assistant in the Electrotyping Rooms, have been very satisfactory and I earnestly call your attention to the injustice of the small appropriation provided in compensation for his labor.

The Printing Office has been conducted as heretofore under the immediate supervision of Mr. F. Moore, foreman, assisted by Messrs Hoover, Beck, and Crawford, printers, and Troutman and Dickson helpers. The capacity of the Office has been taxed to the utmost during the year, and notwithstanding the increased exertions of the printers and the employment of an extra press during the autumn of 1888 and the early summer of 1889, the work has been almost continually behind the demand. The fiscal year 1887 showed a falling off in the printing for the Chart Room, but the demand has been steadily increasing since then until it now exceeds our ability to meet it. I therefore hope the project to apply power to the presses, that has been under consideration for nearly two years, may be carried out during the coming year; but it is now desirable that an additional force and two more presses should also be supplied as it is evident we shall have abundant work for them by the time they can be in position for use. I brought this matter to your attention in my last annual report, but the demand has so far exceeded my expectations that I must now urge upon you the immediate necessity of increased facilities.

The clerical work of the Division, as heretofore during many years, has been most satisfactorily performed by Mr. John H. Smoot. He is indefatigable in his labor, but the large increase in the details of the work caused by the greater demand for charts, has been a serious hindrance to his more important duties of proof reading and verification, and considering the probable additional work that will be required in the coming year I feel it necessary I should recommend to you the assignment to the Division of an additional book-keeper at the earliest practicable date.

The increase in the work of the Division and the proposed additions to the force of experts employed, will also bring demands upon the messengers assigned to the Division beyond the probability of their supplying them. The Division has been fortunate in having two good steady men to fill these places, but for the reasons stated they must have help in the future and I have therefore recommended in my estimates the employment of two additional messengers.

The customary list of chart plates completed, commenced, and in progress during the year is submitted herewith.

Yours, very respectfully,

HERBERT G. OGDEN,
*Assistant U. S. Coast and Geodetic Survey,*
*In charge of Engraving Division.*

Mr. B. A. COLONNA,
*Assistant in charge of Office and Topography.*

---

*Engraved plates of maps and charts completed, commenced, and in progress during the fiscal year ending June 30, 1889.*

1. Outlines. 2. Topography. 3. Sanding. 4. General lettering. 5. Tinting.

| Catalogue No. | Plate No. | Title. | Scale. | Engravers and work. |
|---|---|---|---|---|
| | | NEW CHARTS COMPLETED. | | |
| 17 | 1603 | Tampa Bay to Cape San Blas | 1-400000 | 2. W. A. Thompson; 3. H. C. Evans; 4. E. A. Maedel, A. Petersen, and J. G. Thompson. |
| 102 | 2002 | Little River to Petit Manan | 1-80000 | 2. W. A. Thompson; 4. J. G. Thompson. |
| 114 | 1969 | Newport to Plum Island, etc | 1-80000 | 1. J. G. Thompson; 2. W. A. Thompson; 3. H. C Evans; 4. J. G. Thompson and A. Petersen. |
| 147 | 2009 | Core Sound to Bogue Inlet, including Cape Lookout | 1-80000 | 2. Jos. Enthoffer, W. A. Thompson; 3. H. C. Evans and W. A. Thompson; 4. J. G. Thompson. |
| 151 | 1695 | Little River Inlet and part of Long Bay, South Carolina. | 1-80000 | 2. W. A. Thompson; 3. R. F. Bartle and W. A. Thompson; 4. J. G. Thompson, R. F. Bartle, jr., and H. T. Knight. |
| 178 | 1931 | Hog Island to Wall Creek, including Anclote Anchorage. | 1-80000 | 3. H. C. Evans; 4. H. M. Knight, J. G. Thompson, and J. C. Entwistle. |
| 187 | 1284 | Pensacola Bay to Mobile Bay | 1-80000 | 2. W. A. Thompson: 4. H. M. Knight, J. G. Thompson, and A. Petersen. |
| 367 | 2015 | Oyster Bay, Long Island Sound, New York | 1-30000 | 1, 2, 3. R. F. Bartle; 4. R. F. Bartle, jr., and H. L. Thompson. |
| 368 | 2016 | Huntington Bay, Long Island Sound, New York | 1-30000 | 1, 2, 3. R. F. Bartle; 4. R. F. Bartle, jr., and H. L. Thompson. |
| 401-d | 1664 | James River, No. 4, City Point to Kingsland Creek | 1-20000 | 4 J. G. Thompson and H. L. Thompson. |
| 401-e | 1679 | James River, No. 5, Kingsland Creek to Richmond | 1-20000 | 4. J. G. Thompson and H. L. Thompson. |
| 601 | 1755 | San Diego to Point Arena | 1-1200000 | 4. J.G. Thompson and H. T. Knight; 5. W. A. Thompson. |
| 602 | 1908 | San Francisco Bay to the Strait of Juan de Fuca | 1-1200000 | 4. J.G. Thompson and H. T. Knight; 5. W. A. Thompson. |
| 610 | 1979 | Wilmington and San Pedro Harbors | 1-40000 | 1, 2. H. C. Evans and W. A. Thompson; 3. R. F. Bartle; 4. R. F. Bartle, jr. |
| 669 | 1828 | San Luis Obispo Bay and Port Harford | 1-20000 | 2. W. A. Thompson; 4. W. H. Davis, R. F. Bartle, jr., and L. Von Logau. |
| | | NEW EDITIONS OF CHARTS COMPLETED. | | |
| 111 | 1991 | Monomoy and Nantucket Shoals to Muskeget Channel | 1-80000 | 1, 2, 3. H. C. Evans; 4. A. Petersen, T. Wasserbach, E. H. Sipe, and W. H. Davis. |
| 118 | 2028 | Napeague Beach to Bellport Bay | 1-80000 | 1, 2. Jos. Enthoffer; 3. W. A. Thompson; 4. H. L. Thompson. |
| 204 | 1900 | Galveston Bay | 1-80000 | 3, 4. T. Wasserbach and W. H. Davis. |
| 397 | 2017 | Rappahannock River, No. 6, Moss Neck to Fredericksburgh. | 1-40000 | 4. W. H. Davis |
| 400 | 1994 | Beaufort Harbor, North Carolina | 1-40000 | 3, 4. T. Wasserbach; 4. W. H. Davis. |

*Engraved plates of maps and charts, completed, commenced, and in progress during the fiscal year ending June 30, 1889*—Continued.

| Catalogue No. | Plate No. | Title. | Scale. | Engravers and work. |
|---|---|---|---|---|
| | | NEW EDITIONS OF CHARTS COMPLETED—continued. | | |
| 447 | 1155 | St. Simons Sound, Brunswick Harbor, Turtle River | 1-40000 | 3. T. Wasserbach; 4. H. L. Thompson. |
| 520 | 1993 | Galveston Entrance | 1-40000 | 3, 4. T. Wasserbach. |
| 701 | 1880 | Dixon Entrance to Cape St. Elias | 1-1200000 | 1. H. M. Knight and R. F. Bartle, jr.; 4. R. F. Bartle, jr. |
| | | NEW CHARTS COMMENCED. | | |
| A | 2036 | Cape Sable to Cape Hatteras | 1-1200000 | 1. H. C. Evans and W. A. Thompson. |
| 20 | 2010 | Atchafalaya Bay to Galveston | 1-400000 | 1, 2. R. F. Bartle; 4. R. F. Bartle, jr. |
| 115 | 2005 | Plum Island to Stratford Shoal | 1-80000 | 1. H. C. Evans; 4. A. Petersen and J. C. Entwistle. |
| 116 | 2006 | Stratford Shoal to New York | 1-80000 | 1. H. C. Evans; 4. A. Petersen and J. C. Entwistle. |
| 149 | 2023 | Old Topsail Inlet to Cape Fear | 1-80000 | 1, 2. R. F. Bartle; 3. H. C. Evans; 4. A. Petersen and James P. Cox. |
| 367 | 2015 | Oyster Bay, Long Island Sound, New York | 1-30000 | 1, 2, 3. R. F. Bartle; 4. R. F. Bartle, jr., and H. L. Thompson. |
| 368 | 2016 | Huntington Bay, Long Island Sound, New York | 1-30000 | 1, 2, 3. R. F. Bartle; 4. R. F. Bartle, jr., and H. L. Thompson. |
| 376 | 2032 | Delaware and Chesapeake Bays | 1-400000 | 1, 2. R. F. Bartle; 4. A. Petersen. |
| 680 | 2026 | Umpquah River to Cape Lookout | 1-200000 | 1, 2. R. F. Bartle. |
| | | NEW EDITIONS OF CHARTS COMMENCED. | | |
| 15 | 2049 | Straits of Florida | 1-400000 | 4. A. H. Sefton. |
| 118 | 2028 | Napeague Beach to Bellport Bay | 1-80000 | 1, 2. Jos. Enthoffer; 3. W. A. Thompson; 4. H. L. Thompson. |
| 120 | 2062 | New York Bay and Harbor | 1-80000 | Electrotyping. |
| 128 | 2020 | Isle of Wight to Chincoteague Inlet | 1-80000 | 1, 2. W. A. Thompson; 4. H. L. Thompson. |
| 155 | 1946 | Huntington Island to Ossabaw Island | 1-80000 | 2. W. A. Thompson; 3, 4. T. Wasserbach; 4. H. M. Knight. |
| 397 | 2017 | Rappahannock River, No. 6, Moss Neck to Fredericksburgh. | 1-40000 | 4. W. H. Davis. |
| 516 | 2034 | Atchafalaya Bay | 1-50000 | 1, 2. R. F. Bartle. |
| 520 | 1993 | Galveston Bay | 1-40000 | 3, 4. T. Wasserbach. |
| 701 | 1880 | Dixon Entrance to Cape St. Elias | 1-1200000 | 1. H. M. Knight and R. F. Bartle, jr.; 4. R. F. Bartle, jr. |
| | | NEW CHARTS AND NEW EDITIONS OF CHARTS IN PROGRESS. | | |
| 8 | 2022 | Gay Head to Cape Henlopen | 1-400000 | 1. E. J. Enthoffer. |
| 52 | 1942 | Montauk Point to New York | 1-200000 | 1, 2. W. A. Thompson; 3. H. C. Evans. R. F. Bartle, jr., and William A. Van Doren. |
| 101 | 1937 | Eastport to Little River, Maine | 1-80000 | 1, 2. Jos. Enthoffer. |
| 119 | 1927 | Fire Island Beach to Rockaway Beach | 1-80000 | 3. H. C. Evans; 4. H. T. Knight. |
| 123 | 1974 | Absecon Inlet to Cape May | 1-80000 | 3. R. F. Bartle; 4. A. Petersen and R. F. Bartle, jr. |
| 126 | 1935 | Delaware River, Reedy Point to Trenton | 1-80000 | 3. W. A. Thompson; 4. A. Petersen. |
| 127 | 1983 | Cape May to Isle of Wight | 1-80000 | 2. Jos. Enthoffer; 3. R. F. Bartle; 4. J. G. Thompson, A. Petersen, and E. J. Enthoffer. |
| 148 | 2024 | Bogue Inlet to Old Topsail Inlet | 1-80000 | 4. James P. Cox and R. F. Bartle, jr. |
| 179 | 1932 | Wall Creek to Cedar Keys | 1-80000 | 3. H. C. Evans; 4. H. T. Knight. |
| 211 | 1959 | Laguna Madre, Texas (middle part) | 1-80000 | 3. E. J. Enthoffer; 4. James P. Cox. |
| 304 | 1938 | Cross Island to Nash Island | 1-40000 | 4. E. H. Sipe. |
| 237 | 1970 | Boston Harbor | 1-40000 | 3. W. A. Thompson and T. Wasserbach; 4. J. G. Thompson and T. Wasserbach. |
| 359 | 1798 | Thames River and New London Harbor | 1-20000 | 1, 2. R. F. Bartle; 3. H. M. Knight; 4. H. M. Knight and A. Petersen. |
| 369 | 1987 | New York Bay and Harbor, upper sheet | 1-40000 | 3. H. M. Knight; 4. J. G. Thompson and A. Petersen. |
| 369 | 1988 | New York Bay and Harbor, lower sheet | 1-40000 | 2. W. A. Thompson; 3. H. M. Knight; 4. J. G. Thompson and A. Petersen. |
| 671 | 1534 | San Diego to Santa Monica | 1-200000 | 1, 2. Jos. Enthoffer; 4. H. T. Knight. |
| 675 | 1980 | Point Pinos to Bodega Head | 1-200000 | 2. Jos. Enthoffer and W. A. Thompson; 3. W. A. Thompson; 4. H. M. Knight and J. G. Thompson. |
| 685 | 1834 | Admiralty Inlet | 1-80000 | 1, 2. Jos. Enthoffer; 4. H. T. Knight. |
| 686 | 1996 | Puget Sound | 1-80000 | 1, 2. Jos. Enthoffer and E. J. Enthoffer; 4. R. F. Bartle, jr. |

*REPORT OF THE INSTRUMENT DIVISION, COAST AND GEODETIC SURVEY OFFICE, FOR THE FISCAL YEAR ENDING JUNE 30, 1889.*

U. S. COAST AND GEODETIC SURVEY OFFICE,
*Washington, D. C., August* 17, 1889.

DEAR SIR: I have the honor to submit the following report of the Instrument Division for the fiscal year ending June 30, 1889. No change has been made in the force employed in the Division since the date of my last report, and as heretofore the chief mechanician, Mr. E. G. Fischer, has exercised personal supervision over the details of the work in the instrument shop and Mr. H. O. French has had the immediate charge of the work of the carpenter shop. Both of these gentlemen have performed their duties in a highly satisfactory manner.

The usual large amount of repairing work has been attended to, and a considerable quantity of new work (in view of our limited force), has been accomplished. I take occasion in this connection to renew my recommendation of last year that two additional mechanicians be estimated for. As then stated, a large number of new instruments will soon be required to replace those which have become obsolete or worn out, and our present force, a portion of which must be constantly engaged in repairing work, is too small to meet this demand.

A considerably larger force could be advantageously employed for some time, but unfortunately our limited shop space precludes the employment of a greater additional number than that recommended.

The instrument-shop equipment has been further improved by the addition of a circular-saw bench and a gear cutting attachment for one of the large lathes. The gear-cutter and saw bench and sundry minor tools have been made in our own shop.

The following is a list of new instruments made or partly made during the year, and of old instruments remodeled:

| | |
|---|---|
| Large Steinheil heliotropes | 2 |
| Plane table alidades | 12 |
| Three-armed protractors | 12 |
| For shop equipment: | |
| Gear cutter | 1 |
| Circular-saw bench | 1 |
| Sundry minor tools. | |
| Geodesic level rods | 6 |
| Improved signal lamps | 6 |
| Waterproof metal cases for hydrographic clocks | 8 |
| Wooden cases for hydrographic clocks | 1 |
| Metric scales (¼ size) | 2 |
| Steel-tipped brass plummets (½ pound to 5 pounds) | 28 |
| Sounding register | 1 |
| Letter-gauges, for Engraving Division | 88 |
| Reducing frames, for Drawing Division | 6 |
| 8-inch theodolites | 6 |
| Comparator, 6-metre and shorter lengths, for Office of Weights and Measures | 1 |
| "Thorn" current floats | 97 |
| Combination telemeter and level rods | 2 |
| Plane Table No. 50, remodeled | 1 |
| Heliotropes, remodeled | 4 |
| Electrical illuminating apparatus, for Office of Weights and Measures. | |
| Microscopes, for reading thermometers of "Blair comparator" | 2 |
| Section liner | 1 |
| Sets of subsidiary avordupois weights, for Office of Weights and Measures | 6 |

Sundry instrument stands, telemeters, plane-table clamps, new parts and attachments for old instruments, such as new cutting plate for the dividing engine, new chucking plate for dividing engine, two new telescopes for base bar comparators Nos. III and IV, etc.

The Steinheil heliotropes and the plane-table alidades were well advanced toward completion during the previous fiscal year and were finished in July, 1888, and September, 1888, respectively. The weights and measures comparator, the plane table and the six theodolites are not yet completed, but will all be finished before the end of October, 1889. The theodolites are "repeaters" and it is believed will prove superior instruments. The essential parts have been made by our best mechanicians and special care has been taken to secure the greatest possible degree of accuracy.

The horizontal circles are eight inches in diameter, and will be graduated to five minutes, reading by three verniers to five seconds. The inner centers are made of bell-metal, and the others of "half-hard" brass, while the outer shells are made of ordinary "red metal." The use of steel for centers was not permissible, as each instrument is furnished with an attachment for the approximate determination of magnetic declination. The telescope axes are perforated for axis illumination, thus adapting the instruments for azimuth determination and night observation of horizontal angles. Three of the theodolites have standards high enough to permit of the transiting of the telescopes, and are furnished with eye-piece micrometers and vertical circles. The micrometers are revolvable ninety degrees, and can therefore be used vertically or horizontally, and the vertical circles (graduated to ten minutes, and reading by two verniers to ten seconds) can be used either for ordinary vertical angle measurements or for latitude determinations. Each circle has, of course, a delicate level attached for the latter purpose.

The telescopes of three of the instruments have focal lengths of sixteen inches, and clear apertures of two inches, and are furnished with two eye-pieces having equivalent focal lengths of three-fourths inch and three-eighths inch respectively. The other three (the alt-azimuth instruments) have telescopes fifteen inches in focal length and two inches in clear aperture, and are furnished with three eye-pieces having equivalent focal lengths of three-fourths inch, three-eighths inch, and thirty-five one-hundredths inch (the latter a diagonal eye piece).

The cost of these instruments, and of others named in the foregoing list, notwithstanding the shorter hours of Government shops, will fall within the price at which similiar instruments could be purchased.

The miscellaneous duties of the Division, including the care of the instruments, camp equipage and general property, the receipts and shipments of the same, the examination and adjustment of instruments and determination of instrumental constants, the purchase of new instruments and supplies, the official correspondence and the keeping of the records and inventories, etc., have received due attention.

The following statement shows in detail the force employed during the year and the character of the work performed by each person:

Mr. E. G. Fischer, as already mentioned, has performed the duties of chief mechanician, made working drawings for the use of the pattern makers and mechanicians, and attended to the dividing engine, making such graduations and regraduations as were required for sextants, theodolites, and protractors.

Mr. E. Eshleman served during the entire year, and was engaged upon the adjustment of instruments and miscellaneous repairs of plane tables, alidades, theodolites, levels, dip-circles, magnetometers, protractors, transits, meridian telescopes, zenith telescopes, artificial horizons, heliotropes, vertical circles, level rods, etc. He has also attended to the ruling of glass diaphragms and the silvering of sextant and heliotrope mirrors, and has made 88 new letter gauges.

Mr. L. A. Fischer served during the entire year, and has been engaged chiefly upon new instruments. He has worked upon the 12 new alidades, made the new gear cutter, the sounding register, 1 metric scale, 6 reducing frames, the telescopes, micrometers, and vertical circles for the new theodolites, and sundry taps and dies and shop tools. He has also attended to some miscellaneous repairs of alidades, sounding registers, letter gauges, and comparators, and overhauled and repaired the tide-predicting machine.

The old base-bar comparators Nos. III and IV were practically reconstructed by Mr. Fischer, although the work is properly classed as repairing work.

Mr. P. Vierbuchen served during the entire year, and has been engaged upon miscellaneous repairs of sextants, protractors, theodolites, levels, tide gauges, reconnoitering telescopes, binoculars, heliotropes, ships' compasses, station transits, zenith telescopes, plane tables, alidades, tele-

meters, signal lamps, meridian telescopes, steel tapes, etc. He has also made six sets of avoirdupois weights (smaller denominations), the new illuminating apparatus for the Office of Weights and Measures, and the new thermometer cases, and has worked also upon the new comparator, the new clock cases, and the saw bench.

Mr. T. Gerhards served during the whole year, and has been engaged chiefly upon new work. He has made the twelve protractors and the two reading microscopes, and has done a portion of the work upon the twelve new alidades, the new comparator, and the Steinheil heliotropes. He has also attended to some miscellaneous repairs of theodolites, levels, magnetometers, and the Engraving Division ruling machine.

Mr. O. Storm served during the whole year, and has also been engaged chiefly upon new work. He assisted in finishing the new alidades and Steinheil heliotropes, and has made the centers, horizontal circles, and standards of the new theodolites, one metric scale and sundry tools. He has also done a portion of the work on the new comparator, illuminating apparatus, and saw-bench, and has attended to some miscellaneous repairs of protractors, scales, proportional dividers, the Engraving Division ruling machine, and the pendulum comparator.

Mr. S. Kearney served during the whole year, and has worked upon the new Steinheil heliotropes, the six reducing frames, the six geodesic level-rods, tangent screws and subsidiary parts of the six theodolites, and in remodeling Plane Table No. 50. He has also made sundry shop tools, performed miscellaneous work for the Office of Weights and Measures, and attended to the gas engine and the office bells.

Mr. M. Lauxman served during the whole year, and has been engaged upon miscellaneous repairs of level-rods, protractors, plane-tables, lanterns, parallel rulers, chart-cases, etc., cleaning and polishing scales, straight-edges, etc.; making plummets, plane-table clamps, telemeter fixtures, clock-cases, capstan-pins, specimen cups, cutting and chucking plates for dividing engine, ten chain poles and pins, patterns, etc. He has also re-modeled four heliotropes and assisted in the work on current floats, the six theodolites, section liner, new protractors, and gas engine.

Mr. H. O. French, assisted by Messrs. G. W. Clarvoe and C. N. Darnall, has attended to the work of the carpenter-shop, including the making of patterns, instrument stands, level and telemeter rods, plane-table boards, current floats, instrument cases, packing boxes, book and chart cases, record cases, miscellaneous cabinet work for the various divisions of the Office, etc. They have also attended to the mounting of maps and charts, the packing of instruments and charts for transportation, and the miscellaneous repairs to the building and office furniture.

Mr. R. C. Glascock served during the year as property clerk, and has attended to the books, records, and inventories concerning the general property of the survey, and the official correspondence relating thereto. He has also compiled the monthly reports of the Division.

Mr. William West served during the year as messenger for the Division. His services will be further mentioned in the report of the Miscellaneous Division.

Yours respectfully,

ANDREW BRAID,
*Assistant Coast and Geodetic Survey,*
*In charge of Instrument Division.*

Mr. B. A. COLONNA,
*Assistant in charge of Office and Topography.*

*REPORT OF THE TIDAL DIVISION, COAST AND GEODETIC SURVEY OFFICE, FOR THE FISCAL YEAR ENDING JUNE 30, 1889.*

TIDAL DIVISION, U. S. COAST AND GEODETIC SURVEY OFFICE,
*Washington, D. C., June 30, 1889.*

SIR: I have the honor to submit herewith the report of this Division for the fiscal year ending une 30, 1889.

The work accomplished during the year may be summarized as follows:

1. An aggregate of three years eleven months of record from automatic tide-gauges, with the accompanying tabulations of half-hourly ordinates, high and low waters, temperature and density of the sea, and meteorological data, and one hundred and seventy-one original and one hundred and sixty-two duplicate volumes of observations on staff and box gauges, have been received, examined, and registered, and two hundred and thirty-seven letters prepared.

2. The Tide Tables for the Atlantic and Pacific coasts for the year 1890, two volumes large octavo, have been prepared and the greater part of the volume for the Atlantic coast read and differenced in proof. The page has been enlarged to admit of the introduction of additional descriptions of data relating to tides, tidal currents, and the variation of the compass. The volume for the Atlantic coast has been extended to the east coast of British America as far as the Strait of Belle Isle by the introduction of constants for two hundred and six subordinate stations in those waters. The volume for the Pacific coast has been in like manner made to include the west coast of British America by the introduction of constants for eighty-five subordinate stations in British Columbia. The number of stations in Alaska has been increased from twenty two to thirty-three, and full predictions made for Sitka and Kadiak Island as principal stations for the first time.

3. Tide notes have been prepared for an aggregate of eighty-three stations for publication on forty-one charts, and for thirty-five stations for publication in the Coast Pilot.

4. One hundred and thirteen descriptions of tidal bench-marks with heights above the plane of reference, and other tidal data, have been prepared and furnished for the use of field parties, in response to thirty three requisitions.

5. Tidal information, including thirty-six descriptions of bench-marks, has been prepared and furnished in reply to twenty-nine calls from persons not connected with the Survey.

6. The harmonic reduction of the tidal observations for the years 1887 and 1888 at Sandy Hook, New Jersey, has been commenced and that of the tidal observations for the year 1885–'86 at Kadiak Island, Alaska, practically finished.

7. Non-harmonic "first reductions" have been made of two hundred and twenty-two short series, aggregating about seventeen years of continuous observations, and "second reductions" at sixty-five stations.

The following is a statement of the general character of the work of each clerk.

Mr. L. P. Shidy has been engaged upon almost every description of our work—first and second reductions, the preparation of tide notes and descriptions of bench-marks, the collection of data for the Tide Tables, the differencing of the Tide Tables and their revision in proof, &c. As heretofore I have depended largely upon Mr. Shidy for the elimination of error from the work of the other clerks. I recommend that Mr. Shidy's salary be increased from $1,500 to at least $1,600 per annum.

Mr. J. W. Whitaker made the major part of the predictions with the machine for the year 1890, read proof, assisted in the preparation of data, made a large number of non-harmonic reductions, and has commenced the harmonic reduction of the observations for the year 1887 at Sandy Hook, New Jersey.

Miss A. G. Reville predicted in duplicate for two stations for 1890 with the machine, copied predictions and read proof, copied sketches and descriptions of bench-marks, reports, old reductions, examined and registered tidal records received, and finished the graphical analysis of tides at Kadiak Island, Alaska, etc. I recommend that Miss Reville's salary be increased from $720 to $840 per annum.

Mrs. Virginia Harrison made a large number of non-harmonic reductions, predicted from curves for Philadelphia and Baltimore for 1890, differenced predictions, copied the major part of the predictions for 1890, read and differenced proof, copied sketches and descriptions of bench-marks, and assisted on harmonic analyses.

Mrs. M. E. Nesbitt made a large number of non-harmonic reductions, predicted for Philadelphia, Baltimore, and Sitka for 1890 from curves, computed diurnal and semi-diurnal tides at Kadiak Island, computed predictions of daily ranges for 1890, read, differenced, and revised predictions in manuscript and proof, and worked on harmonic analyses. Mrs. Nesbitt produces a large quantity of computation reasonably free from error, and I recommend that her salary be increased from $720 to $900 per annum.

Mr. F. M. Little, transferred to this Division December 1, made non-harmonic reductions, differenced and revised the predictions for 1890 in manuscript and in proof, assisted in the preparation of data for the Tide Tables and in response to requisitions, and has commenced the harmonic analysis of the observations for the year 1888 at Sandy Hook, New Jersey. Mr. Little has made commendable progress in acquiring a knowledge of tidal work.

Mr. John F. Hayford, recently selected under Civil Service rules by competitive examination and since graduated with the degree of civil engineer from the department of civil engineering of Cornell University, was attached to this Division June 22, the date of his appointment as a computer in this Office. Mr. Hayford's first week in this Division has demonstrated his peculiar fitness for our work. He is a good mathematician, with a practical turn, is possessed of a good judgment, computes somewhat rapidly and with no error which I have been able to discover, and finds the official day rather short. I recommend that he be permanently appointed with the full salary appropriated, to date from August 1 proximo.

Mr. David E. Snead was under instruction in this Division September 10 to 17, preparatory to taking charge of the Sandy Hook tidal station.

Mr. J. G. Spaulding was under instruction in this Division from February 23 to March 12, preparatory to proceeding to Savannah Entrance to establish a permanent tidal station.

The charge of this Division was continued with the undersigned throughout the year. In addition to the usual duties of distribution, supervision, and revision of work, preparation of the Tide Tables, data to fill requisitions, and attending to the correspondence, I have given special attention to a collation, comparison, and adjustment of all tidal data accessible and available relating to the Atlantic coast from the Strait of Belle Isle to Biloxi, and to the Pacific coast from Southern California to the Aleutian Islands, and the introduction of the results into the Tide Tables for 1890.

Yours, respectfully,

ALEX. S. CHRISTIE,
*Chief of the Tidal Division.*

Mr. B. A. COLONNA,
*Assistant in charge of Office and Topography.*

*REPORT OF THE MISCELLANEOUS DIVISION, COAST AND GEODETIC SURVEY OFFICE, FOR THE FISCAL YEAR ENDING JUNE 30, 1889.*

WASHINGTON, D. C., *July*, 1889.

DEAR SIR: I have the honor to submit herewith the report of the Miscellaneous Division for the fiscal year ended June 30, 1889.

The organization of this division and the general character of the work performed have been the same during this as in the preceding fiscal year. There has, however, been a marked increase in the amount of business transacted. Being so varied and miscellaneous, a large proportion of the work done cannot be stated in such a way as will convey an intelligible idea of the amount of labor involved in its performance. The volume of such portion of it as it is practicable to show by figures was as follows:

| | |
|---|---|
| Letters written (sale agents, 2,583; miscellaneous, 304) | 2,887 |
| Ledger accounts kept (sale agents) | 80 |
| Quarterly statements of sale agents examined and verified | 234 |
| Circulars to sale agents issued | 30 |
| Charts sent to sale agents | 27,676 |
| Orders for purchases issued | 353 |
| Requisitions made for printing and binding | 128 |
| Requisitions for stationery filled | 640 |
| Requisitions for supplies and repairs filled | 244 |
| Annual Reports distributed | 2,395 |
| Tide Tables issued | 3,308 |
| Atlantic Coast Pilots issued | 30 |
| Subdivisions, Atlantic Local Coast Pilot, issued | 317 |
| United States Coast Pilots, Atlantic Coast, Part IV, issued | 112 |
| Pacific Coast Pilots, Alaska, Part I, issued | 36 |
| Charts joined for Chart Division | 1,873 |
| Original field sheets, charts, etc., mounted on muslin | 799 |
| Sheets of drawing paper mounted on muslin | 105 |
| Sheets of mounted drawing paper issued | 163 |

The demand for charts published by the Survey from mariners and others who buy and actually use them in navigation is steadily increasing. This is shown by the fact that two thousand four hundred and three more sheets were sent to sale agents during the last fiscal year than were so sent during the preceding year, viz:

| | Sheets. |
|---|---|
| Charts supplied to agencies, 1888–'89 | 27,676 |
| Charts supplied to agencies, 1887–'88 | 25,273 |
| Increase | 2,403 |

This increase would have been considerably larger if we had been able to furnish all the charts that were ordered during the last quarter of the fiscal year. The inability to do this was owing to inadequate facilities in the plate printing branch, and to insufficient appropriations for that and other divisions of the office.

During the last four years the output of charts to sale agents has increased very nearly 100 per cent., viz:

| | Sheets. |
|---|---|
| Charts supplied to agencies, 1888–'89 | 27,676 |
| Charts supplied to agencies, 1884–'85 | 14,035 |
| Increase | 13,641 |

This illustrates the great growth of only one branch of this division. It is not improper to remark in this connection that during the period mentioned there has been no corresponding increase in the working force.

There were established during the year thirteen new agencies for the sale of publications—ten on the Atlantic Coast, and three on the Pacific Coast; and eleven were discontinued—seven on the Atlantic Coast, and four on the Pacific coast. The total number of agencies on June 30, 1889, was seventy-four, viz: Sixty-three on the Atlantic Coast, and eleven on the Pacific Coast.

The following table shows the aggregate of business done through the agencies from July 1, 1888, to June 30, 1889:

| Publications. | In hands of sale agents July 1, 1888. | | Issued to sale agents during the year. | | Sales by agents during the year. | | | | Returned by sale agents during the year. | | In hands of sale agents June 30, 1889. | |
|---|---|---|---|---|---|---|---|---|---|---|---|---|
| | Number of copies. | Value. | Number of copies. | Value. | Number of copies. | Value. | Amount of commission allowed. | Net amount received. | Number of copies. | Value. | Number of copies. | Value. |
| Charts | 16,709 | $6,239.21 | 27,676 | $11,614.30 | 23,476 | $10,094.54 | $5,046.95 | $5,047.59 | * 1,684 | *$549.25 | 19,225 | $7,209.72 |
| Tide-Tables | 939 | 234.75 | 2,828 | 707.00 | 2,952 | 738.00 | 368.89 | 369.11 | * 181 | * 45.25 | 634 | 158.50 |
| Atlantic Coast Pilots | 48 | 168.00 | 17 | 59.50 | 21 | 73.50 | 15.75 | 57.75 | 2 | 7.00 | 42 | 147.00 |
| Subdivisions, Atlantic Local Coast Pilot | 446 | 282.45 | 227 | 171.40 | 206 | 142.75 | 32.80 | 109.95 | * 27 | * 16.50 | 440 | 294.60 |
| United States Coast Pilot, Atlantic Coast, Part IV | ..... | ..... | 81 | 81.00 | 22 | 22.00 | 5.50 | 16.50 | ..... | ..... | 59 | 59.00 |
| Pacific Coast Pilot, Alaska, Part I | 40 | 80.00 | 26 | 52.00 | 49 | 98.00 | 24.50 | 73.50 | ..... | ..... | 17 | 34.00 |
| Totals of values | ..... | $7,004.41 | ..... | $12,685.20 | ..... | $11,168.79 | $5,494.39 | $5,674.40 | ..... | $618.00 | ..... | $7,902.82 |

* 203 Charts ($78.95); 34 Tide Tables ($8.50); and 1 subdivision, A. L. C. P. ($0.60)—total value $88.05, stock of G. Davies & Son, Seattle, W. T., destroyed by fire June 6, 1889, included in these figures.

The sales of publications on the Eastern and Western Coasts, respectively, were as follows:

| Publications. | Atlantic and Gulf Coasts. | | | | Pacific Coast. | | | |
|---|---|---|---|---|---|---|---|---|
| | Number of copies. | Value. | Amount of commission allowed. | Net amount received. | Number of copies. | Value. | Amount of commission allowed. | Net amount received. |
| Charts | 19,734 | $8,414.54 | $4,206.99 | $4,207.55 | 3,742 | $1,680.00 | $839.96 | $840.04 |
| Tide-Tables | 1,063 | 265.75 | 132.80 | 132.95 | 1,889 | 472.25 | 236.09 | 236.16 |
| Atlantic Coast Pilots | 20 | 70.00 | 15.00 | 55.00 | 1 | 3.50 | .75 | 2.75 |
| Subdivisions, Atlantic Local Coast Pilot | 206 | 142.75 | 32.80 | 109.95 | ..... | ..... | ..... | ..... |
| United States Coast Pilot, Atlantic Coast, Part IV | 22 | 22.00 | 5.50 | 16.50 | ..... | ..... | ..... | ..... |
| Pacific Coast Pilot, Alaska, Part I | 2 | 4.00 | 1.00 | 3.00 | 47 | 94.00 | 23.50 | 70.50 |
| Totals of values | ..... | $8,919.04 | $4,394.09 | $4,524.95 | ..... | $2,249.75 | $1,100.30 | $1,149.45 |

The following new publications were issued during the year: Annual Report of the Superintendent for the year ended June 30, 1886; United States Coast Pilot, Atlantic Coast, Part IV, "Long Island Sound, with approaches and adjacent waters"; Bulletins Nos. 2 to 8, inclusive; and Notices to Mariners, Nos. 103 to 115, inclusive. A third edition of Atlantic Local Coast Pilot, Subdivision 6–7, "Cape Ann to Monomoy," was also published.

The following publications were sent to press: The Annual Report of the Superintendent for the year ended June 30, 1887; Pacific Coast Pilot, "California, Oregon, and Washington;" Atlantic Local Coast Pilot, Subdivision 22, "Straits of Florida, Jupiter Inlet to Dry Tortugas"; Tide Tables for the Atlantic Coast of the United States for the year 1890, and Ap-

pendices to the Annual Report of the Superintendent for the fiscal year ended June 30, 1887, which are to be printed separately in pamphlet form, as follows:

No. 6.—On the Movements of the Sands at the Eastern Entrance to Vineyard Sound.

No. 7.—Fluctuations in the Level of Lake Champlain and Mean Height of its Surface above the Sea.

No. 8.—Gulf Stream Explorations, Observations of Currents in 1887.

No. 9.—Heights from Geodetic Leveling between Mobile and New Orleans, 1885–'86.

No. 10.—Terrestrial Magnetism. The Magnetic Work of the Greely Arctic Expedition, 1881–'84.

No. 12.—General Index of Illustrations contained in the Annual Reports of the U. S. Coast and Geodetic Survey from 1844 to 1885, inclusive.

No. 13.—Addendum to Appendix No. 8, Report for 1883, "The Estuary of the Delaware."

No. 14.—Results of Geodetic Leveling in 1886–'87 about New York Bay and Harbor and vicinity.

No. 15.—Report on the results of the Physical Survey of New York Harbor.

No. 16.—A Bibliography of Geodesy.

The Annual Reports of the Survey, the Appendices to the same printed separately in pamphlet form, the Bulletins, and Notices to Mariners, were distributed to the Executive Departments, Senators and Members of Congress, institutions, and individuals, as usual; and were also furnished in response to numerous special applications. The distribution of Annual Reports was as follows:

| Date of report. | Domestic distribution. | | Foreign distribution. | | Total. |
|---|---|---|---|---|---|
| | To institutions. | To individuals. | To institutions. | To individuals. | |
| 1851 | 1 | 1 | ..... | ..... | 2 |
| 1852 | 4 | 2 | ..... | ..... | 6 |
| 1853 | 3 | 2 | ..... | ..... | 5 |
| 1854 | 3 | 1 | ..... | ..... | 4 |
| 1855 | 1 | 1 | ..... | ..... | 2 |
| 1856 | 4 | 3 | ..... | ..... | 7 |
| 1857 | 1 | 1 | ..... | ..... | 2 |
| 1858 | 3 | ..... | ..... | ..... | 3 |
| 1859 | 1 | 1 | ..... | ..... | 2 |
| 1860 | 4 | 2 | ..... | ..... | 6 |
| 1861 | 2 | 2 | ..... | ..... | 4 |
| 1862 | 2 | 1 | ..... | ..... | 3 |
| 1863 | 1 | 1 | ..... | ..... | 2 |
| 1864 | 1 | ..... | ..... | ..... | 1 |
| 1865 | 2 | 4 | ..... | ..... | 6 |
| 1866 | 4 | 3 | ..... | ..... | 7 |
| 1867 | 5 | 4 | ..... | ..... | 9 |
| 1868 | 5 | 5 | ..... | ..... | 10 |
| 1869 | 3 | 2 | ..... | 1 | 6 |
| 1870 | 3 | 3 | 2 | ..... | 8 |
| 1871 | 4 | 6 | 2 | ..... | 12 |
| 1872 | 6 | 8 | 4 | 1 | 19 |
| 1873 | 11 | 7 | 4 | 1 | 23 |
| 1874 | 11 | 9 | 4 | 2 | 26 |
| 1875 | 16 | 14 | 4 | 2 | 36 |
| 1876 | 15 | 12 | 5 | 1 | 33 |
| 1877 | 17 | 9 | 6 | 1 | 33 |
| 1878 | 22 | 16 | 8 | 1 | 47 |
| 1879 | 20 | 18 | 7 | 1 | 46 |
| 1880 | 28 | 46 | 8 | 1 | 83 |
| 1881 | 31 | 48 | 8 | 1 | 88 |
| 1882 | 32 | 58 | 8 | 2 | 100 |
| 1883 | 32 | 52 | 8 | 1 | 93 |
| 1884 | 30 | 66 | 10 | 2 | 108 |
| 1885 | 32 | 91 | 10 | 5 | 138 |
| 1886 | 596 | 596 | 202 | 21 | 1,415 |
| Totals | 956 | 1,095 | 300 | 44 | 2,395 |

The following is a list of the publications of the Survey, with the number of copies of each received from the Public Printer during the year:

| Name of publication. | No. of copies. |
|---|---|
| Annual Report of the Superintendent for the year ended June 30, 1886 | 2,000 |
| Atlantic Local Coast Pilot, subdivision 6-7—"Cape Ann to Monomoy" | 499 |
| United States Coast Pilot, Atlantic Coast, Part IV—"Long Island Sound, with approaches and adjacent waters" | 500 |
| Appendix No. 7, Report for 1886—"Voyages of Discovery and Exploration on the Northwest Coast of America from 1539 to 1603" | 50 |
| Appendix No. 12, Report for 1886—"Secular Variation of the Magnetic Declination in the United States, and at some Foreign Stations." (Sixth edition) | 4,000 |
| Superintendent's Circular No. 12—"Preservation of Triangulation Points" | 1,000 |
| BULLETINS. | |
| No. 2.—Notes on Alaska from recent surveys | 3,000 |
| No. 3.—Tidal levels and flow of currents in New York Bay and Harbor | 3,000 |
| No. 4.—Resources of and developments in Alaska | 3,000 |
| No. 5.—The value of the "Arcano del Mare" with reference to our knowledge of the magnetic declination in the earlier part of the seventeenth century | 3,000 |
| No. 6.—Secular variation in the position of the Agonic Line of the North Atlantic and of America between the epochs of 1500 and 1900, A. D. | 3,000 |
| No. 7.—Historical review of the work of the Coast and Geodetic Survey in connection with terrestrial magnetism | 3,000 |
| No. 8.—Currents of New York Bay and Harbor. (First edition) | 10,000 |
| No. 8.—Currents of New York Bay and Harbor. (Second edition) | 5,000 |
| NOTICE TO MARINERS. | |
| No. 103.—Chart corrections during month of June, 1888 | 3,500 |
| No. 104.—Chart corrections during month of July, 1888 | 3,500 |
| No. 105.—Chart corrections during month of August, 1888 | 3,500 |
| No. 106.—Chart corrections during month of September, 1888 | 3,500 |
| No. 107.—Chart corrections during month of October, 1888 | 3,500 |
| No. 108.—Chart corrections during month of November, 1888 | 3,500 |
| No. 109.—Chart corrections during month of December, 1888 | 3,500 |
| No. 110.—Chart corrections during month of January, 1889 | 3,500 |
| No. 111.—Chart corrections during month of February, 1889 | 3,500 |
| No. 112.—Chart corrections during month of March, 1889 | 3,500 |
| No. 113.—Chart corrections during month of April, 1889 | 4,500 |
| No. 114.—Off-shore current observations. Information of special importance to mariners | 4,500 |
| No. 115.—Chart corrections during month of May, 1889 | 6,000 |

Mr. Freeman R. Green, besides keeping the accounts of the Sale Agents, has constantly performed numerous clerical duties, and has cheerfully devoted many extra hours to work. His books have been accurately and neatly kept, and all the duties imposed upon him have been performed in a most creditable and satisfactory manner. He richly earns much larger compensation than he receives.

Mr. R. T. Bassett has continued in charge of the Map-mounting Room, and has satisfactorily performed the same character of work as heretofore.

Mr. W. M. Long has discharged the various duties of Janitor, and Messrs. David Parker and W. H. Keith those of watchmen throughout the year in a satisfactory manner. Mr. J. G. Culverwell also filled the position of watchman acceptably until May 14, 1889, on which date he was succeeded by Mr. A. B. Simons.

Messrs. William H. Butler, Chief Messenger; C. H. T. Over, Sandy Bruce, William Savoy, Peter Page, and William West, messengers; Charles H. Jones and Attrell Richardson, packers and folders; William R. McLane, driver; Horace Dyer and Harrison Murray, firemen; Mrs. S. E. Flynn, William P. Young, and John H. Brown, laborers, all deserve commendation for the faithful performance of their respective duties, which have been largely increased by the great augmentation of work throughout the Office. Hans Bowdwin, employed as an extra laborer, rendered satisfactory service as night fireman from December 14, 1888, to March 31, 1889, when his employment ceased.

Yours, respectfully,

M. W. WINES,
*General Office Assistant.*

B. A. COLONNA, ESQ.,
*Assistant in charge of Office and Topography.*

*REPORT OF THE CHART DIVISION, COAST AND GEODETIC SURVEY OFFICE, FOR THE FISCAL YEAR ENDING JUNE 30, 1889.*

U. S. COAST AND GEODETIC SURVEY OFFICE,
*Washington, July* 1, 1889.

SIR: I have the honor to submit the following report of the Chart Division for the year ending June 30, 1889:

I took charge of this Division on the 1st of May, relieving Assistant W. H. Dennis, who was transferred to the charge of the Drawing Division. Consequently, this report includes the work of the Division for ten months under Mr. Dennis and for two months under myself. As a matter of convenience I report on the whole.

The general scope of the work of the Division has been the same as during the previous year. Seven employés have continued in the Division during the year.

The special duty of each was: Mr. J. H. Barker, correcting charts; Mr. A. Upperman, correcting charts; Mr. J. L. Smith, receiving and stamping charts, printing, etc.; Miss L. A. Mapes, book-keeping, coloring buoys, etc.; Miss Mary Thomas, coloring lights and buoys; Miss Sophie Hein, coloring light-sectors, etc., and correcting charts; Mrs. Jennie Fitch, coloring lights and buoys, and correcting catalogues.

Mr. Hugo G. Eichholtz worked in the Division until his death on June 18. His duty was issuing charts. I knew Mr. Eichholtz only a short time, but can testify that he was a faithful and conscientious man. He was much loved in the Survey, where his long service had made him well known, and is much regretted. On May 8 Mr. Neil Bryant was assigned to the Division and is still in it. He has been employed in various duties, stamping and issuing charts, correcting catalogues, etc. As a body, the members of the Division have shown intelligence and alacrity in their work, and a personal interest in its success.

On account of the increase of business in the Division, additional help is required to provide properly for present and future needs. The increase is due partly to the greater number of charts issued and partly to the greater detail in issue. For instance, the naval vessels and branch Hydrographic Offices of the Navy are now supplied with charts separately and directly from this Office instead of in bulk, as formerly, through the Hydrographic Office. One more draughtsman could be made very useful as an additional chart corrector, and his assistance would enable us to fill orders more promptly. It is proposed that the light-houses on the Coast Charts shall be colored in the future. Should this plan be carried into effect another person would be needed, and I would suggest that this person be also a draughtsman, for there are often extraordinary calls for charts, which could be more readily met if more persons could be employed in correcting. In fact, our work is so varied that variety of talent is much needed in the employés of this Division, so that they can readily be shifted from one class of work to another.

Thirteen new charts from copper plates and thirty-six photolithograph charts, forty-nine in all, were added to the catalogue during the year, having been delivered at the Chart Room and placed on the shelves for sale. Following is a list of them:

| Title. | Date. | Catalogue No. |
|---|---|---|
| ENGRAVED. | 1888. | |
| Cape Fear River Entrance to Reeves Point, North Carolina | July 28 | 424 |
| Cape Fear River, Reeves Point to Wilmington, N. C | July 28 | 425 |
| Grimm's Island to Kalama, Columbia River, Oregon | July 16 | 6415 |
| Nash Island to Schoodic Island, Maine | July 24 | 305 |
| Little River to Petit Manan, Me | Sept. 19 | 102 |
| Hog Island to Walls Creek, etc., Florida | Sept. 22 | 178 |
| San Diego to San Francisco, Cal | Oct. 8 | 601 |
| Tampa Bay to Cape San Blas, Florida | Dec. 3 | 17 |
| Little River and part of Long Bay, South Carolina | Dec. 3 | 151 |
| San Francisco Bay to the Straits of Juan de Fuca | Jan. 8 | 602 |
| James River, Sheet No. 5, Kingsland Creek to Richmond, Va | Jan. 8 | 401*e* |
| James River, Sheet No. 4, City Point to Kingsland Creek, Virginia | Jan. 12 | 401*d* |
| Pensacola Bay to Mobile Bay, Alabama | Feb. 12 | 187 |

| Title. | Date. | Catalogue No. |
|---|---|---|
| PHOTOLITHOGRAPHED. | 1888. | |
| Harlem River and Spuyten Duyvil Creek, New York | July 21 | 369[7] |
| Nestuggah Bay, Washington | Aug. 2 | 660 |
| Coquille River Entrance, Oregon | Aug. 9 | 636 |
| Long Island Sound, Throg's Neck to New Rochelle, N. Y | Aug. 28 | 361[5] |
| Eel River Entrance, California | Aug. 28 | 693 |
| Dermott Map, City of Washington | Sept. 8 | 3035b |
| Frederick Sound, northern part of Sumner Strait, Alaska | Sept. 12 | 705 |
| District of Columbia, section map | Sept. 12 | 18w |
| Entrance to Brazos River, Texas | Oct. 16 | 522 |
| Fire Island Beach to Rockaway Beach, New York | Nov. 2 | 119 |
| Red Bay, Prince of Wales Island, Alaska | Nov. 6 | 719 |
| Port McArthur, Kuiu Island, Alaska | Nov. 6 | 720 |
| Point Protection, Prince of Wales Island | Nov. 6 | 721 |
| New River Inlet, North Carolina | Nov. 10 | 422 |
| Sabine Pass, Texas | Nov. 21 | 519 |
| St. Johns Harbor, Southeastern Alaska | Nov. 21 | 712 |
| San Juan Capistrano, Cal | Nov. 24 | 609 |
| Brown Cove, Southeastern Alaska | Nov. 30 | 704 |
| Etolin Harbor, Southeastern Alaska | Dec. 11 | 729 |
| Steamer Bay, Etolin Island, Southeastern Alaska | Dec. 17 | 716 |
| Ratz Harbor, Prince of Wales Island, Alaska | Dec. 17 | 717 |
| Dewey Anchorage, Etolin Island, Alaska | Dec. 17 | 718 |
| New Rochelle to Manursing Island, New York | Dec. 17 | 361[6] |
| | 1889. | |
| District of Columbia | Jan. 4 | Sec. 1E. |
| Lompoc Landing, California | Jan. 26 | 616 |
| Shakan Strait, Prince of Wales Island, Alaska | Jan. 26 | 730 |
| Baltimore Harbor, Maryland | Feb. 13 | 384[2] |
| Mobile River, Alabama | Feb. 13 | 491[2] |
| Mobile River, Alabama | Feb. 13 | 491[6] |
| Wrangell Strait and Duncan Canal, Alaska | Feb. 19 | 800 |
| Mobile River, Alabama | Mar. 12 | 491[1] |
| Mobile River, Alabama | Mar. 12 | 491[9] |
| Mobile River, Alabama | Apr. 4 | 491[3] |
| Mobile River, Alabama | Apr. 4 | 491[8] |
| Akun Cove, Alaska | Apr. 4 | 823 |
| Annapolis Harbor, Maryland | Apr. 25 | 385 |

The following table will show the receipts, issues, and general distribution of the charts during the year:

| Issues, etc. | July 1, 1888, to June 30, 1889. | |
|---|---|---|
| | Number. | Value. |
| Sales agents | 27,677 | $11,615.80 |
| Sales by Office and Chart Division | 547 | 213.85 |
| Congressional account | 3,561 | 1,627.00 |
| Hydrographic Office, Navy | 6,801 | 2,566.15 |
| Light-House Board | 2,736 | 1,045.40 |
| Executive Departments | 6,827 | 2,592.45 |
| Foreign Governments | 741 | 256.50 |
| Miscellaneous | 422 | 178.50 |
| Total | 49,312 | $20,095.65 |

| | |
|---|---|
| Total charts issued during the fiscal year | 49,312 |
| Total charts condemned during the fiscal year | 3,009 |
| Value of charts issued | $20,095.65 |
| Value of charts condemned | $805.85 |

*Charts on hand and received from July 1, 1888, to June 30, 1889.*

| | Number. | Value. |
|---|---|---|
| On hand by inventory July 1, 1888 | 39, 082 | $12, 481. 30 |
| Received July 1, 1888, to June 30, 1889 (plate) | 37, 587 | 15, 848. 90 |
| Received July 1, 1888, to June 30, 1889 (stone) | 18, 185 | 6, 085. 25 |
| Sectional maps District of Columbia | 1, 017 | 101. 70 |
| Returned | 1, 573 | 494. 55 |
| Total on hand and received to June 30, 1889 | 97, 444 | 35, 911. 70 |
| Total issued (49, 312) and total condemned (3, 009) to June 30, 1889 | 52, 321 | 20, 901. 50 |
| On hand by book July 1, 1889 | 45, 123 | 15, 010. 20 |
| On hand by count July 1, 1889 | 45, 067 | 15, 049. 35 |
| Difference between book and count | 56 | $39. 15 |

At the end of the year a count of charts referred to in the foregoing table was made as a check on the book account. The result was as follows:

Number of differences = 207; count minus in 117 cases; plus in 90 cases; number of charts minus = 283, value, $114.60; plus = 227, value, $153.75; final result, number of charts minus = 56, value, plus $39.15.

This peculiar result is readily explained. There is much variation in the value of the charts, and, although the charts plus were less in number than the charts minus, their aggregate value was greater.

The count was finally taken as correct, and the books have been started on the new year accordingly.

I do not consider this discrepancy a large one, considering the complexity of the business and the opportunity offered for the accumulation of minor errors in a year. A fruitful source of errors is in the use of such a chart number as, for instance, 369$^7$, which may in issue be mistaken for 369, and may, in moving the charts to and from the shelves, cause a chart to be misplaced. The error of issue may, in certain cases, never be rectified, but the error in displacement should finally correct itself. For these and other reasons the errors are not necessarily nor probably the fault of the book-keeper, whose work is subject to various checks in the monthly balances, etc.

The system of account of charts seem to be a practical and good one. In all the operations of receipts and disbursements the count is taken, at least, where there are more than a few charts, by two persons independently. It is not intended that any chart shall be given out, whether permanently or temporarily, without a memorandum which shall be the basis of the book-keeping. It is to be considered that the demand for charts is irregular, and that a sudden call may tax the energies of the Division to the utmost, and at such times it is not surprising if minor errors should creep in. The yearly inventory will correct gross ones. A daily count of our charts is impracticable, and without it an exact coincidence of book and count can not be expected. It is believed that the Division has done exceedingly well in this direction with the means at its command. The yearly count itself is a tedious operation involving several days' work, during which the ordinary business of the Division should be stopped, and it must be taken, in the cases of some of the charts, several times for verification. It is believed that this account of stock will leave as little to be charged to profit and loss as that of any private business of equal dimensions and detail.

Yours, very respectfully,

GERSHOM BRADFORD,
*Assistant in charge Chart Division.*

Mr. B. A. COLONNA,
*Assistant in charge of Office and Topography.*

*ARCHIVES AND LIBRARY, U. S. COAST AND GEODETIC SURVEY OFFICE. REPORT FOR THE FISCAL YEAR ENDING JUNE 30, 1889.*

COAST AND GEODETIC SURVEY OFFICE,
*Washington, D. C., August* 29, 1889.

DEAR SIR: I have the honor to submit herewith the report of the receipt and registry in the archives of original and duplicate records, computations, completed original topographic and hydrographic sheets, and specimens of sea-bottom turned into the office during the fiscal year ending June 30, 1889, as hereinafter enumerated; and also of the books and pamphlets received in the library during the same time.

## I.—*Records and computations.*

GEODETIC WORK.

| | Number of volumes. | | Number of cahiers. | | Total. |
|---|---|---|---|---|---|
| | Original. | Duplicate. | Original. | Duplicate. | |
| Observations, horizontal measures | 121 | 107 | ..... | ..... | 228 |
| Observations, vertical measures | 11 | 10 | ..... | ..... | 21 |
| Descriptions of stations | 16 | 13 | 1 | 1 | 31 |
| Base measurement | 3 | 5 | ..... | ..... | 8 |
| Leveling observations | 58 | 41 | 1 | ..... | 100 |
| Rod-books | 12 | ..... | ..... | ..... | 12 |
| Descriptions of bench-marks | 5 | 4 | 2 | 3 | 14 |
| Route-line maps | 3 | 3 | ..... | ..... | 6 |
| Determination of constants | 1 | 1 | ..... | ..... | 2 |
| Geodetic miscellany | 9 | 6 | ..... | ..... | 15 |
| Reconnaissance notes | 11 | ..... | ..... | ..... | 11 |
| Computations | 1 | ..... | 141 | ..... | 142 |
| Total | 251 | 190 | 145 | 4 | 590 |

ASTRONOMICAL WORK.

| | Number of volumes. | | Number of cahiers. | Number of sheets. | Total. |
|---|---|---|---|---|---|
| | Original. | Duplicate. | Original. | Original. | |
| Observations for latitude | 7 | 8 | ..... | ..... | 15 |
| Observations for longitude | ..... | 26 | ..... | ..... | 26 |
| Chronograph sheets | ..... | ..... | ..... | 236 | 236 |
| Observations for time | 11 | 11 | ..... | ..... | 22 |
| Observations for azimuth | 7 | 9 | ..... | ..... | 16 |
| Computations | 10 | ..... | 79 | ..... | 89 |
| Total | 35 | 54 | 79 | 236 | 404 |

MAGNETIC WORK.

| | Number of volumes. | | Number of cahiers. | | Number of sheets. | | Total. |
|---|---|---|---|---|---|---|---|
| | Original. | Duplicate. | Original. | Duplicate. | Original. | Duplicate. | |
| Observations for terrestrial magnetism | 2 | 2 | 66 | 61 | ..... | ..... | 131 |
| Magnetic traces | ..... | ..... | ..... | ..... | 549 | 549 | 1,098 |
| Computations | ..... | ..... | 2 | ..... | 135 | ..... | 137 |
| Total | 2 | 2 | 68 | 61 | 684 | 549 | 1,366 |

## I.—*Records and computations*—Continued.

PENDULUM WORK.

| | Number of cahiers. | | Total. |
|---|---|---|---|
| | Original. | Duplicate. | |
| Pendulum observations | 1 | 1 | 2 |
| Total | 1 | 1 | 2 |

HYDROGRAPHIC WORK.

| | Number of volumes. | | Number of cahiers. | | Number of bottles. | Number of rolls. | Number of sheets. | Number of packages. | Total. |
|---|---|---|---|---|---|---|---|---|---|
| | Original. | Duplicate. | Original. | Duplicate. | | | | | |
| Observations for soundings | 435 | 215 | | | | | | | 650 |
| Observations for angles | 64 | 23 | | | | | | | 87 |
| Descriptions hydrographic signals | 12 | | | | | | | | 12 |
| Specimens of sea-bottom | | | | | 169 | | | | 169 |
| Tidal observations | 144 | 107 | | | | | | | 251 |
| Maregrams | | | | | | 61 | | | 61 |
| Comp. tidal data | | | | | | | 6 | | 6 |
| Current observations and data | 2 | | | 1 | | 1 | 11 | | 15 |
| Observations of density and temperature of sea-water | 6 | 1 | 1 | | | | | | 8 |
| Log-books | 24 | | | | | | | | 24 |
| Miscellaneous | 16 | | | | | | | 2 | 18 |
| Total | 703 | 346 | 1 | 1 | 169 | 62 | 17 | 2 | 1,301 |

## II.—*Topographic and hydrographic surveys.*

TOPOGRAPHIC WORK.

| Register No. | Titles of topographic sheets. | Descriptive reports. | No. of sheets. |
|---|---|---|---|
| 1640 | Jupiter Narrows, Hobe's Sound, Jupiter Sound, and Jupiter River, Fla | | 1 |
| 1652 | Indian River, including St. Lucie River, Manatee Creek, and part of Jupiter Narrows, Fla | Received | 1 |
| 1669 | Right bank of St. Croix River from Devil's Head to Mill Cove, Me | do | 1 |
| 1675 | Eld Inlet, Puget Sound, Wash | | 1 |
| 1676 | Laguna Madre from Rainy △ to Mosquito △, Texas | | 1 |
| 1677 | Laguna Madre from Mosquito △ to Sand △, Texas | | 1 |
| 1678 | Laguna Madre from Lone Palmetto △ to Gum Pen △, Texas | | 1 |
| 1679 | Laguna Madre from Gum Pen △ to Griffin's Point △, Texas | | 1 |
| 1762 | Western part of Isle Derniére, La | Received | 1 |
| 1763 | Vine Island and eastern part of Isle Derniére, La | do | 1 |
| 1764 | Timballier and Caillou Islands, La | do | 1 |
| 1780 | South Branch Cobscook Bay, Me | do | 1 |
| 1783 | Tuckernuck and Muskeget, Mass | do | 1 |
| 1814 | Nantucket Island from Squam Head to Never's Head, including town of Siasconsett, Mass | do | 1 |
| 1815 | Western part of Nantucket Island, Mass | do | 1 |
| 1832 | Burnt Island and vicinity, Lake Huron | | 1 |
| 1835 | West coast of Florida, Cape Romano to Horse Key, Fla | Received | 1 |
| 1842 | South coast of Long Island, Moriches Bay from Smith's Point to Hart's Cove, N. Y | | 1 |
| 1843 | South coast of Long Island, from Hart's Cove to Quantuck Bay, N. Y | | 1 |
| 1844 | Gay Head, Martha's Vineyard Island, Mass | | 1 |
| 1847 | Resurvey Suisun Bay, Montezuma Creek, eastward, Cal | Received | 1 |
| 1848 | Resurvey Suisun Bay, Sheet No. 2, Cal | do | 1 |
| 1855 | Resurvey Suisun Bay, Montezuma Creek, eastward and westward, Collinsville to Mems △, Cal | | 1 |

## II.—*Topographic and hydrographic surveys*—Continued.

TOPOGRAPHIC WORK—Continued.

| Register No. | Titles of topographic sheets. | Descriptive reports | No. of sheets. |
|---|---|---|---|
| 1856 | Island of No-Man's Land, Mass | | 1 |
| 1857 | Severn River from Tolly's Point to County Bridge, Md | | 1 |
| 1860 | Naval Academy and Cemetery, Severn River, Md | | 1 |
| 1861 | Bay Ridge, Tolly's Point, Severn River, Md | | 1 |
| 1862 | Port Orford to Cape Sebastian, Oregon | Received | 1 |
| 1863 | Right bank of St. Croix River from Mill Cove to Lewis Cove, Me | do | 1 |
| 1869 | Gulf of Georgia, northeast part of Orcas Island, Wash | do | 1 |
| 1870 | Gulf of Georgia, Patos, Lucia, and Matia Islands, Wash | do | 1 |
| 1871 | Gulf of Georgia, Village Point to base of Sandy Point, Wash | do | 1 |
| 1872 | Gulf of Georgia, base of Sandy Point to Birch Bay, Wash | do | 1 |
| 1873 | Gulf of Georgia, Birch Bay to Boundary, Wash | do | 1 |
| 1874 | Gulf of Georgia, Point Roberts, Wash | do | 1 |
| 1876 | Umpqua River to Koos Bay, Coos County, No. 2, Oregon | do | 1 |
| 1877 | Umpqua River to Koos Bay, Coos County, No. 3, Oregon | do | 1 |
| 1898 | Pacific coast northward from San Deguito Valley, Cal | do | 1 |
| 1899 | Pacific coast northward from San Marcos Valley, Cal | do | 1 |
| 1900 | Pacific coast in vicinity of Oceanside, Cal | do | 1 |
| 1901 | South coast of California from White Rock No. 2, westward, Cal | | 1 |
| 1902 | Water front of the city of Philadelphia from Susquehanna avenue to Market street, Pa | | 1 |
| | Total | | 42 |

HYDROGRAPHIC WORK.

| Register No. | Titles of hydrographic sheets. | Descriptive reports. | No. of sheets. |
|---|---|---|---|
| 1743 | Triangulation, Union Bay to Fort Wrangell, Alaska | | 1 |
| 1748 | Scheme of triangulation, Sumner Strait, Alaska | | 1 |
| 1752 | Sumner Strait, southeast Alaska, Sheet No. 1 | | 1 |
| 1753 | Sumner Strait, southeast Alaska, Sheet No. 2 | | 1 |
| 1754 | Sumner Strait, southeast Alaska, Sheet No. 3 | | 1 |
| 1759 | Umpqua River, including bar and entrance, Oregon | | 1 |
| 1776 | Coast of Louisiana, from Harbor △ to Marsh Island, La | Received | 1 |
| *1777 | Vermilion Bay, La | do | 1 |
| 1783 | San Juan Capistrano Bay, Cal | | 1 |
| 1784 | Sacramento and San Joaquin Rivers, Cal | Received | 1 |
| 1785 | Suisun Bay, Grizzly Bay, Suisun and Montezuma Creeks, Cal | do | 1 |
| 1786 | Hydrographic examination of the head of a submarine valley off Newport Bay, Cal. | | 1 |
| 1793 | Passamaquoddy Bay from Eastport to Frost Cove, Me | Received | 1 |
| 1794 | Passamaquoddy Bay and mouth of St. Croix River, Me | do | 1 |
| 1795 | St. Croix River from its mouth to Oak Point, Me | do | 1 |
| 1796 | St. Croix River from Oak Point to Calais, Me., including Oak Bay, N. B. | do | 1 |
| 1797 | San Pedro Bay and Wilmington Lagoon, Cal | | 1 |
| 1798 | Cobscook Bay, Sheet No. 1 | Received | 1 |
| 1814 | Rosario Strait and Bellingham Channel, Wash | do | 1 |
| 1815 | Padilla Bay, Wash | do | 1 |
| 1819 | Vermilion Bay, Sheet No. 3, La | do | 1 |
| 1820 | Examination of Middle Ground, Stonington Harbor, Conn | | 1 |
| 1821 | Vermilion Bay, Sheet No. 2, La | Received | 1 |
| 1822 | Vermilion Bay, Sheet No. 4, La | do | 1 |
| 1823 | Atchafalaya River from Atchafalaya Bay to Sword Point, La | do | 1 |
| 1824 | Atchafalaya River from Sword Point to Morgan City, La | do | 1 |
| 1825 | Florida Bay, west coast of Florida | do | 1 |
| 1826 | Florida Bay, Pavilion Key to Northwest Cape, Fla | do | 1 |
| 1827 | Florida Bay from Northwest Cape to Content Key, Fla | do | 1 |
| 1828 | Florida Bay, Content Key to Northwest Passage light-house, Fla | do | 1 |
| 1829 | Vineyard Sound from Cape Poge to West Chop, Mass | do | 1 |
| 1830 | Entrance to St. Simon's Sound, Ga | do | 1 |
| 1832 | Vineyard Sound from West Chop to Robinson's Hole, Mass | do | 1 |

## II.—*Topographic and hydrographic surveys*—Continued.

HYDROGRAPHIC WORK—Continued.

| Register No. | Titles of hydrographic sheets. | Descriptive reports. | No. of sheets. |
|---|---|---|---|
| 1833 | The harbor of Wood's Holl, Mass | Received | 1 |
| 1834 | Rockaway Inlet, N. Y | | 1 |
| 1835 | Black Rock, coast of Maine | | 1 |
| 1836 | Coast of Maine from Matinicus Rock to Seguin Island, Me | | 1 |
| 1837 | Off-shore soundings on George's Bank and Nantucket Shoals | | 1 |
| 1838 | Cobscook Bay, Sheet No. 2, Me | Received | 1 |
| 1840 | Cobscook Bay, Sheet No. 4, Me | do | 1 |
| 1842 | Annapolis Harbor, Md | do | 1 |
| 1843 | Approaches to Vineyard Sound and off Martha's Vineyard, Mass | do | 1 |
| 1844 | Muskeget Channel, Mass | do | 1 |
| 1845 | Vicinity of Cape Flattery, Wash | | 1 |
| 1846 | Upper part of Newport River, N. C | | 1 |
| 1847 | Lower part of Newport River, N. C | | 1 |
| 1848 | North River, N. C | | 1 |
| 1849 | Back Sound, N. C | | 1 |
| 1850 | The Straits, N. C | | 1 |
| 1851 | Core Sound, N. C | | 1 |
| 1852 | Nelson's Bay, N. C | | 1 |
| 1853 | Core Sound, N. C | | 1 |
| 1854 | Thoroughfare Bay, N. C | | 1 |
| 1855 | Core Sound, N. C | | 1 |
| 1856 | Pamplico Sound, N. C | | 1 |
| 1857 | Cedar Island Bay, N. C | | 1 |
| 1858 | Cedar Island Bay, N. C | | 1 |
| 1859 | Cedar Island Bay, N. C | | 1 |
| 1860 | White Oak River, N. C | | 1 |
| 1861 | New River, N. C | | 1 |
| 1862 | Northern part of Pamplico Sound, N. C | | 1 |
| 1863 | Northern part of Pamplico Sound, N. C | | 1 |
| 1864 | Northern part of Pamplico Sound, N. C | | 1 |
| 1865 | Eastern part of Pamplico Sound, N. C | | 1 |
| 1866 | Pamplico Sound, vicinity of Hatteras Inlet, N. C | | 1 |
| 1867 | Pamplico Sound, Long Shoal Point to Middleton, N. C | | 1 |
| 1868 | Pamplico Sound, Middleton to Juniper Bay Point, N. C | | 1 |
| 1869 | Pamplico Sound, Juniper Bay Point to Bell's Bay, N. C | | 1 |
| 1870 | Pamplico Sound, Hatteras Inlet to First Hammock △ N. C | | 1 |
| 1871 | Pamplico Sound, vicinity of Ocracoke Inlet, N. C | | 1 |
| 1872 | Pamplico Sound, from Pamplico light-house to Neuse River light-house, N. C | | 1 |
| 1873 | Chesapeake entrance, Little Inlet to Cape Henry, Va | Received | 1 |
| 1875 | Cape Charles and vicinity, Va | do | 1 |
| 1876 | Horse-Shoe Shoal, Va | do | 1 |
| 1881 | Vicinity of Cape Flattery, Nee-ah Bay, Wash | | 1 |
| 1883 | Examination of Mission Bay Rock, San Francisco Bay, Cal | | 1 |
| 1888 | Coast of California from Boundary Monument to Sand Ridge △, Cal | | 1 |
| 1889 | Coast of California from Boundary Monument to Sand Ridge △, Cal | | 1 |
| 1901 | Cross-sections of Chatham Beach, Cape Cod, Mass | | 1 |
| 1902 | Cross-sections east shore of Cape Cod, Nausett Lights to Cahoon's Hollow, Mass | | 1 |
| 1903 | Cross-sections east shore of Cape Cod, Cahoon's Hollow to Highland Light, Mass | | 1 |
| 1904 | Location of shoal off Point Fermin, Cal | | 1 |
| 1909 | Mobile River, Sheet No. 1, Ala | Received | 1 |
| 1910 | Mobile River, Sheet No. 2, Ala | do | 1 |
| 1911 | Mobile River, Sheet No. 3, Ala | do | 1 |
| 1912 | Mobile River, Sheet No. 4, Ala | do | 1 |
| 1913 | Mobile River, Sheet No. 5, Ala | do | 1 |
| 1914 | Mobile River, Sheet No. 6, Ala | do | 1 |
| 1915 | Mobile River, Sheet No. 7, Ala | do | 1 |
| 1916 | Mobile River, Sheet No. 8, Ala | do | 1 |
| 1917 | Mobile River, Sheet No. 9, Ala | do | 1 |
| 1918 | Mobile River, Ala., diagram Sheet | | 1 |
| | Total | | 92 |

From the preceding tabular statements it is found that there have been registered in the Archives during the fiscal year ending June 30, 1889:

| | | |
|---|---|---|
| Geodetic observations | volumes | 440 |
| Geodetic observations | cahiers | 8 |
| Geodetic computations | cahiers | 141 |
| Geodetic computations | volume | 1 |
| Astronomical observations | volumes | 79 |
| Astronomical computations | volumes | 10 |
| Astronomical computations | cahiers | 79 |
| Chronograph sheets | | 236 |
| Magnetic observations | volumes | 4 |
| Magnetic observations | cahiers | 127 |
| Magnetic computations | cahiers | 2 |
| Magnetic computations | sheets | 135 |
| Magnetic traces | sheets | 1,098 |
| Pendulum observations | cahiers | 2 |
| Hydrographic observations | volumes | 1,049 |
| Hydrographic observations | cahiers | 2 |
| Hydrographic observations | roll | 1 |
| Hydrographic observations | sheets | 17 |
| Hydrographic observations | packages | 2 |
| Tide rolls or maregrams | number | 61 |
| Bottles of specimens of sea-bottom | number | 169 |
| Descriptive reports on topographic sheets | cahiers | 21 |
| Descriptive reports on hydrographic sheets | cahiers | 18 |
| Completed original topographic sheets | | 42 |
| Completed original hydrographic sheets | | 92 |

No records or computations have been bound during this fiscal year, and I here reiterate what I have stated in my former reports that there is a great mass of valuable records and computations in the Archives that should be bound for their better preservation and convenience of access.

The soundings and tidal observations ought also to be bound; they would then occupy much less space, as many of the volumes are now more than half white paper.

During the fiscal year ending June 30, 1889, there were received in the Library two hundred and ninety-eight volumes of bound books, one hundred and eigthy-two volumes of unbound books, and one hundred and twenty-two pamphlets, besides the usual periodicals and publications of learned societies. These figures include duplicates.

One hundred and sixty-eight volumes have been substantially bound at the Government Bindery. There are still many volumes of periodicals and unbound books that ought to be bound, and a number of books that need rebinding.

The card catalogue of the bound books in the Library is finished. For want of room to arrange properly the pamphlets, cards have not been written for each, but only for the subjects in bulk, giving the numbers of the shelves where they are stored.

Mr. J. M. Duesberry has been employed as a clerk in this Division during the fiscal year.

Yours, respectfully,

ARTEMAS MARTIN,
*Librarian and Custodian of Archives.*

Mr. B. A. COLONNA,
*Assistant in charge of Office and Topography.*

*REPORT OF THE ACCOUNTING DIVISION, COAST AND GEODETIC SURVEY OFFICE FOR THE FISCAL YEAR ENDING JUNE 30, 1889.*

U. S. COAST AND GEODETIC SURVEY OFFICE,
*Washington, D. C., September 7, 1889.*

SIR: I have the honor to submit herewith the report of the operations of the Accounting Division for the fiscal year ending June 30, 1889. As stated in my last report it is necessary, owing to the varied character of the work performed in this Division, to allude to such events occurring during the year as were liable, to a greater or less extent, to increase or diminish its efficiency or to affect the conduct of its business. These will, therefore, be mentioned in order.

During the month of August, 1888, it became necessary, in order to effect a complete adjustment of the accounts of Mr. William B. Morgan, late Disbursing Agent, to settle the personal accounts which were outstanding at the time of his retirement. This was successfully accomplished; and the amount accruing to Mr. Morgan's credit was deposited in the United States Treasury. The work involved in this settlement was of considerable magnitude, and required an extensive correspondence with those concerned, in the way of explanation, before it was finally and satisfactorily accomplished.

The Annual Report of Expenditures of the Coast and Geodetic Survey for the fiscal year ending June 30, 1888, was transmitted to the Secretary of the Treasury on December 31, 1888. This is the first instance, to my knowledge, where the report has been finished and sent to the Department during the month of December. The preparation and formulation of the data for our present system of detailed reports of expenditures is a work of considerable labor and consumes much time, but the convenience of such a report as a means of reference, affording as it does a complete and detailed history of the financial operations of the Survey for each fiscal year, more than compensates for the labor and time expended upon its preparation.

From February 5 to March 31, 1889, Assistant George A. Fairfield was assigned to duty in the Division, and was engaged in overhauling, replacing vouchers, and re-arranging the duplicate files of the late Disbursing Agent, preparatory to their final deposit in the Archives. These files had been so often referred to during the past three years, and the vouchers had become so completely disarranged as to be absolutely worthless as a means of reference, and hence the necessity for their thorough examination and re-arrangement. It is almost needless to say that Assistant Fairfield accomplished the work to the entire satisfaction of all concerned.

During February and March, 1889, duty was performed by me at the Department upon several evenings and on Sunday, in connection with the Disbursing Clerk of the Department, engaged in the examination of the statements covering amounts withheld from officers of the Survey in payment of disallowances made by the Auditor in the accounts of the late Disbursing Agent. This action was preparatory to the refunding of these amounts to those officers and employés of the Survey from whose salary accounts they had been deducted, some two years prior, by order of the Department.

The final adjustment of the accounts of Mr. William B. Morgan, the late Disbursing Agent, occurred during the latter part of the calendar year 1888. This result was very gratifying to those whose duties brought them in contact with the numerous and perplexing questions which were constantly arising during the process of the settlement. With but few exceptions the adjustment involved merely the usual and ordinary routine disallowances, such as are always liable to occur in the settlement of Government accounts, and which are mainly the result of an honest difference of opinion between the accounting officers of the Treasury and the disbursing officers.

In compliance with the Superintendent's instructions, an examination of the books and accounts of the clerk to the Assistant in charge of Office and Topography was completed during the month of April, 1889. A difference of only two cents existed in the final balance. Inasmuch as the examination covered a period of three and a half years, this condition of the accounts furnishes decided proof of the general ability and efficiency of Dr. William B. French, who for many years, under the direction of the Assistant in charge of Office, has had charge of the receipts of public moneys derived from the sales of charts, publications, and condemned property.

On June 11, 12, and 13, 1889, the accounts of the Bureau, and its financial status with the Treasury Department, were investigated by a special committee from the Division of Public Moneys, under orders from the Secretary of the Treasury. The committee performed its work in the most thorough manner, proving every item of appropriation and expenditure and checking every balance. The system of monthly balance sheets, showing receipts and disbursements of all public moneys for the Survey under the appropriations made by Congress, which originated in this Division and the preparation of which is now mandatory under the regulations, again proved its usefulness. The members of the committee expressed themselves as perfectly satisfied with the results of their examination, and so reported to the Secretary.

During the year the current work of the Division was accomplished with as much promptitude as possible, though at times its accumulation was embarrassing and productive of much delay. Under our present system of making disbursements, with its inherent evils of delay and complication, such conditions are likely to arise at almost any time and it is quite impossible to avoid them.

The action of the accounting officers of the Treasury in the adjustment and settlement of the accounts of the Bureau during the last fiscal year has been very gratifying, and encourages me in the belief that a point has now been reached in the preparation and rendition of our accounts to the Department beyond which it is hardly possible for us to progress. Such objections as were made by the accounting officers were susceptible of an explanation, which was in most instances entirely satisfactory and resulted in the allowance of the items objected to.

The statistics of work accomplished in the division, as nearly as they can be recorded, are stated below. They afford but a slight conception of the innumerable details of accounting to which attention has to be given. The examination and adjustment of any one of the thousands of accounts passing through the division every year may occupy a day's time, and frequently even more, before a final settlement can be reached. Statistics, therefore, can not be given which would intelligibly account for the labor and time expended on such work.

*Statistics.*

| | |
|---|---|
| Abstracts, quarterly, of disbursements, pages of | 165 |
| Accounts with United States opened, number of | 38 |
| Accounts, allotments, opened, number of | 183 |
| Accounts, subappropriations, opened, number of | 142 |
| Accounts entered on quarterly abstracts, number of | 1,718 |
| Accounts current with United States, number of | 44 |
| Accounts posted to allotments, number of | 1,901 |
| Accounts posted to fiscal year book, number of | 2,058 |
| Accounts posted to voucher book, number of | 2,094 |
| Accounts posted to subappropriations, number of | 1,698 |
| Advances to field officers, amount of | $133,730.42 |
| Allotments to field officers, number of | 539 |
| Authorities, book of, letters posted to, etc., number of | 612 |
| Balance sheets, receipts and disbursements, number of | 38 |
| Cash book, entries in, checks and cash | 2,945 |
| Certificates of deposit received, acted on, and filed | 45 |
| Check-lists for drawing checks, number of | 218 |
| Checks drawn and issued, number of | 2,529 |
| Circulars issued, number of | 322 |
| Copying, miscellaneous, pages, number of | 627 |
| Disbursements on adjusted accounts, amount of | $487,932.51 |
| Drafts, Treasury, received, number of | 22 |
| Estimates of field officers received, number of | 516 |
| Letters received, acted on, and filed | 3,023 |

| | |
|---|---|
| Letters written and press-copied | 2,948 |
| Letters indexed, letter-book | 3,272 |
| Letters, rough draughts of, written | 983 |
| Pay envelopes prepared, number of | 2,539 |
| Pay-rolls, office, monthly and semi-monthly, pages of | 309 |
| Pay-rolls, field officers, quarterly, pages of | 49 |
| Property lists, checked and returned | 202 |
| Receipts of funds from Treasury, amount of | $488,580.54 |
| Reports, monthly, of Division, pages of | 162 |
| Reports, fiscal year, pages of | 62 |
| Requisitions on Treasury for funds, number of | 18 |
| Requisitions from field officers for advances, number of | 185 |
| Statements of condition of appropriations, pages of | 68 |
| Trial balances, receipts and disbursements, number of | 23 |
| Vouchers adjusted and settled, including bills, number of | 18,943 |

During the year the following-named circulars and publications relative to the preparation and rendition of accounts, and information concerning them, were distributed to the chiefs of parties and other officers:

Table of rates for Government telegraphing for the fiscal year 1889.

Schedule of notarial fees for jurats in the different States and Territories.

Table of distances, 1888, issued by the War Department.

Annual report of expenditures of the Coast and Geodetic Survey for the fiscal year 1888.

The arrangement of the work of the Division among its employés has been substantially as follows:

Mr. Eugene B. Wills, Accountant, was engaged in the examination of accounts, checking them as to errors of enumeration, extension, etc., in drawing checks at the Department, and mailing the correspondence of the Division. He was so employed until May 7, 1889, on which date he was transferred to duty under direction of the Assistant in charge of Office and Topography.

Mr. William. H. Lanman, acting as General Book-keeper, has rendered faithful and intelligent service in recording the business of the Division in its various account-books and in the management of the system of balance sheets, the preparation and rendition of the quarterly accounts to the Department, and other details intrusted to his charge. Under my general supervision the clerical work of the examination of the books and accounts of the clerk to the Assistant in charge of office, heretofore referred to, was performed by Mr. Lanman, whose zeal and efficiency in the discharge of this duty deserves special commendation. The class of work upon which Mr. Lanman is engaged deserves a higher rate of compensation than that he now receives, and I would respectfully recommend that some provision be made at an early date to give him an increased emolument.

Mrs. S. M. Taliaferro, acting as Book-keeper and Entry Clerk, was engaged mainly in work dependent upon that of Mr. Lanman, and upon such other clerical details as were from time to time assigned to her, until October 15, 1888, upon which date she was detailed for duty in the office of the Sixth Auditor by direction of the Secretary of the Treasury. On January 2, 1889, she was transferred to the Department and appointed to a clerkship in the Sixth Auditor's Office. Mrs. Taliaferro had acquired considerable information as to the work of the Division during her connection with it, and I felt some regret at losing her services. The transfer, however, was an advantage to her, as she has since been promoted.

Miss Paula E. Smith, general clerk, has rendered intelligent and capable service during the year in the preparation of the monthly and semi-monthly pay-rolls, the care of the letter-files, recording authorities and contracts, and general copying and miscellaneous work. During the month of May she was absent, by authority, for twenty-nine days, without pay, an enforced absence rendered necessary by the condition of her health.

A recapitulation of data contained in the Daily Journals of Occupation of the Division for the fiscal year just ended gives the following:

*Summary for all employés.*

| | Days. |
|---|---|
| Actual number of days worked | 1,156 |
| Absence—sick | 78 |
| Absence—leave | 161 |
| Office closed—holidays, etc | 35 |

*Divided as follows:*

| | Worked. | Absent sick. | Absent leave. | Office closed. |
|---|---|---|---|---|
| | *Days.* | *Days.* | *Days.* | *Days.* |
| Parsons, John W | 323 | 5 | 29* | 3 |
| Wills, Eugene B | 217¼ | 15½ | 27 | 9¼ |
| Lanman, William H | 255¾ | 0 | 55 | 9¼ |
| Taliaferro, S. M | 137¾ | 9 | 7 | 4¼ |
| Smith, Paula E | 222¼ | 48½ | 43 | 9¼ |

* Working at home for 14 days, which was charged to leave account.

The total number of working days during the year, on which the office was open for the transaction of business, was three hundred and one and three-quarters.

The actual disbursement of money for the Survey has, as heretofore since August, 1885, been made by Mr. Geo. A. Bartlett, disbursing clerk, Treasury Department, on vouchers from this office duly approved by the Superintendent. The labor of examination, adjustment, and settlement of these vouchers, involving a large correspondence, the keeping of numerous records, and the supervision of innumerable details, is performed by this office. The business is all conducted in Mr. Bartlett's name, and he is responsible for the correctness of the disbursements. Repeated efforts have been made to secure some recognition from Congress in behalf of Mr. Bartlett, as a compensation for the service and responsibility entailed upon him in making disbursements for this Bureau, but so far without avail. In prior reports, I have referred to the matter more in detail, and my subsequent experience has in no wise changed my opinion as to the justness of an allowance to Mr. Bartlett for the services performed by him for this Bureau.

At the date of this report, I am gratified to perceive that my recommendations in the reports of the two preceding years, as to the necessity for the erection of a counter or other suitable enclosure in the rooms of the Accounting Division, are to be favorably acted on. This action is entirely in accord with the system prevailing in all the Departments, and will result in affording that degree of privacy and freedom from interruption so essential to the proper conduct of an office involving the duties of auditing and accounting.

In closing, I beg to call attention to what I have said in prior reports as to the necessity for the appointment of a disbursing officer for this bureau. The present system of making disbursements is so costly, full of incongruities, and so entirely inapplicable to a proper conduct of the financial business of the Survey, that no good or substantial reason can be assigned in favor of its continuance. Any quantity of data can be supplied to prove that the cost of making disbursements for the Survey, by present methods, is largely in excess of the amount which would be required if the Bureau possessed its own disbursing officer with a properly organized force to assist him. In behalf of the public interests, I have deemed it my duty to call attention to this matter, and have done so in my annual reports for the past three years; here my responsibility ceases. If it is intended to perpetuate the present system, with its inherent evils of delay, cost, and incongruity, elements which affect and retard the work of almost every branch of the Survey, I shall at least have the satisfaction of knowing, in the event of future criticism, that no concealment of its peculiarities and its baneful effects upon the business of this Bureau can be laid to my charge.

There are many improvements, both in the method of keeping the accounts and their rendition, which could be inaugurated and developed to such an extent that many of the irksome features

now attendant upon the work of adjustment and settlement of accounts could be modified and the labor now given to such points considerably lightened, both in the office and in the field. It is useless, however, to undertake any such improvements, or to develop any new methods in accounting, while the Survey is laboring under the present awkward and unbusiness-like system of making disbursements. The new method would require the presence at the office of a disbursing officer, without which they could not be successfully accomplished.

I am, respectfully yours,

JOHN W. PARSONS,
*Accountant, U. S. Coast and Geodetic Survey,*
*In charge Accounting Division.*

B. A. COLONNA, Esq.,
*Assistant in charge of Office and Topography.*

---

*REPORT OF THE OFFICE OF STANDARD WEIGHTS AND MEASURES FOR THE FISCAL YEAR ENDING JUNE 30, 1889.*

U. S. COAST AND GEODETIC SURVEY OFFICE,
*Washington, August 3, 1889.*

SIR: Herewith I beg leave to submit this report on the work done in the Office of Weights and Measures, under my charge, during the fiscal year ending June 30, 1889.

The regular force of this Office has as heretofore consisted of a mechanician, a watchman, whose labors are accounted for in the reports of the Instrument and Miscellaneous Divisions, respectively, and of an adjuster of weights and measures.

The latter position is filled by Dr. J. J. Clark. He was assigned early in the summer to duty at the Cincinnati Exposition in connection with Coast and Geodetic Survey and Weights and Measures exhibits, and reported for duty in this Office on November 22. Since that date he has been engaged in making weighings, in adjusting and repairing standards, and in making line measures.

In addition to the regular force several assistants were assigned to duty for short periods of time.

Assistant John B. Weir was on duty from July 1 to July 8, and again from September 1 to December 26. I am greatly indebted to him for his conscientious and very efficient assistance. Besides assisting in various comparisons and computations, he made a complete determination of the secondary end standards of length from the one-foot rod to the ten-foot rods; made a determination of the length of the scale of the mercurial barometer, and compared six brass scales intended for the new leveling rods.

Subassistant F. H. Parsons served in this Office from April 13 to June 30. He compiled a reference volume in relation to the distribution of all the State standards, examining the records and letter files of this office to verify and correct existing data and to systematize the information. This involved the indexing of the earlier letter files.

The card catalogue of papers relating to observations and computations begun by him last year, he continued and brought up to date. It contains at present five hundred and fifty-eight cards. Mr. Parsons also assisted in the comparison of standards of length, in making computations, and in duplicating records, and in all these duties proved himself efficient.

Assistant A. T. Mosman was attached to this Office from December 10 to December 31, during which time he made experimental weighings in order to familiarize himself with the work he was about to take in hand, but his services were elsewhere urgently needed and he was detached.

Assistant F. D. Granger was attached to this Office from May 17 to May 31, and was engaged in the comparison of the mural standard graduations and in the comparison of two brass scales.

My own work included the supervision of the construction of the new comparing vault and of a comparator capable of comparing line or end measures up to 6 metres in length. A detailed report on the comparing room will be submitted at some future time, after it has been tested under widely different conditions of temperature and for different classes of work.

During the summer I began the comparisons between the Committee Metre and the Lake Survey standard kindly loaned to us by the Chief of Engineers. These comparisons were made in various places and at different seasons in order to secure the requisite range of temperature. A series of comparisons was made in the cold-storage rooms over the Centre Market, where fairly constant temperatures at zero and at $-4^{\circ}$ centigrade were secured. The results of these comparisons show that there can be no material difference of length between the International Prototype Metre and the Committee Metre. The Lake Survey standard was also compared by me with the metre of Y. and M. No. 1, with a new steel line metre and with Berlin metre No. 49. The results deduced from the comparisons of the last-mentioned bar differ materially, about $6\mu$ from the value for its length at zero, hitherto accepted and resulting from the comparisons made at Berlin. A detailed report on these comparisons by Assistant Schott and myself has been submitted.

The foot scale of the mural standard was regraduated and numerical corrections were deduced for each line of the graduation.

Yours respectfully,

O. H. TITTMANN,
*Assistant in charge of Office of Weights and Measures.*

Mr. B. A. COLONNA,
*Assistant in charge of Office and Topography.*

# APPENDIX NO. 5.—1889.

## REPORT OF THE HYDROGRAPHIC INSPECTOR FOR THE FISCAL YEAR ENDING JUNE 30, 1889.

U. S. COAST AND GEODETIC SURVEY OFFICE.
*Washington, D. C., June 29, 1889.*

SIR: I have the honor to submit the following report of the hydrographic work of the Survey carried on during the fiscal year ending June 30, 1889.

### ATLANTIC COAST.

On the 5th of July, 1888, the *Gedney*, Lieut. F. H. Crosby, U. S. N., commanding, left New York for the coast of Maine, and on her arrival began work in St. Croix River and Cobscook Bay.

This was carried on until the 6th of September, when Lieutenant Crosby reported that the work assigned him was completed, and as this finished the in-shore hydrographic survey of the coast of Maine, instructions were sent him to close work and to proceed to Nantucket Sound.

The *Blake*, Lieut. J. E. Pillsbury, U. S. N., commanding, was engaged from August 27 to October 1, 1888, in outside work in the vicinity of Matinicus Island, off the coast of Maine. On its completion the *Blake* went to Boston for repairs previous to taking up the current investigations in the vicinity of the Windward Islands, West Indies.

The first of the year found the combined party, consisting of the *Eagre*, *Daisy*, and three large steam-launches, at work in Vineyard and Nantucket Sounds, all under the charge of Lieut. Sumner C. Paine, U. S. N. The work by this party was carried on with good results until the 2d of November, when the weather becoming too unfavorable to proceed with it economically, the party proceeded to New York and began preparing the records and sheets for transmission to the office.

The large number of steam-launches engaged in this survey, together with the *Daisy*—a large tug—and the pulling-boats of the *Eagre*, enabled the work to make progress continuously without having to delay for repairs to the launches in case of a breakdown.

Lieut. J. F. Moser, U. S. N., with party in the steamer *Bache* began work outside of Martha's Vineyard Island about July 5, and shortly afterward, the weather being unfavorable for outside work, he was directed to take up the sheet including Muskeget Channel, a locality peculiarly difficult to survey, owing to strong currents and tide-rips. The work was, however, satisfactorily performed before the end of the season, October 29, when the *Bache* proceeded to Baltimore for overhauling preparatory to starting for the Florida coast.

When the *Gedney* was recalled from the coast of Maine, in September, she was sent to Nantucket Sound to assist in that work, Lieut. J. M. Helm, U. S. N., having relieved Lieutenant Crosby of the command of the vessel on the 14th of September. By the detachment of the latter officer the Survey lost one of its most efficient hydrographers. The sheets of Lieutenant Crosby's last work in the vicinity of Eastport—embracing Passamaquoddy Bay and St. Croix River and Cobscook Bay—have never been exceeded for accuracy by any sheets that have been sent into this office, a most creditable showing when the strong currents and the extreme range of the tides are considered.

The *Gedney* was recalled from her work in Nantucket Sound on the 5th of October and sent to New York to prepare for work in Alaska, the passage of an appropriation for a boundary survey

of that country rendering it probable that extra means of transportation would be required. She was hurriedly overhauled and fitted out, and left New York for San Francisco on the 13th of November and arrived in the latter port on the 20th of April.

The beginning of the year found Lieut. M. L. Wood, U. S. N., in the *Endeavor* carrying on the survey in the vicinity of Cape Charles, the work having been commenced in April. It was completed on the 6th of August, and the *Endeavor* was then sent to Annapolis to make a survey of that harbor—the old chart being unreliable, owing to the changes that had taken place since the survey, on which it was based, was made.

The results of Lieutenant Wood's work in the latter locality have already been brought out as a photolithographic chart on the same scale on which the work was done.

Lieut. Francis Winslow, U. S. N., was engaged during the year on the survey of the natural oyster-beds of North Carolina, a work of much interest to the people living on the shores of the sounds of that State. On the 14th of March the retirement of Lieutenant Winslow from active service in the Navy and his consequent detachment from duty in the Survey, left Ensign J. C. Drake, U. S. N., in charge of this work.

Early in January the *Bache* began work on the coast of Florida, having associated with her the sharpie schooner *Spy*. As the work was in shoal water on the keys to the eastward of Key West, the latter vessel, being of light draught, was of much use, and Lieutenant Moser refers to her in the highest terms.

When it became necessary for the *Bache* to go to Cedar Keys to finish the hydrography in that vicinity the *Spy* was left to complete the work on the keys. On returning to Key West the *Bache* took up the survey of the Northwest Channel at the request of the Light-House Board, and on the completion of this work, on the 14th of May, started for New Bedford, where she arrived on the 23d of that month. The appropriation for "Repairs of Vessels" having been exhausted, it was necessary to delay until after July 1 the repairs that were required to put the vessel in condition for work in the field during the summer.

The *Gedney*, the vessel that had been engaged for some years in the survey of the coast of Louisiana, having been transferred to the Pacific, the *Endeavor* was assigned to the work, and after a complete overhauling she started for the Gulf on the 5th of January, and since that date has been actively engaged in that locality under the command of Ensign L. M. Garrett, U. S. N. On the 22d of June the *Endeavor* closed work for the season and started for New York.

The investigation of ocean currents has been carried on by the *Blake*, under command of Lieut. J. E. Pillsbury, U. S. N., during the past year with most gratifying results. On the 11th of January, 1889, the *Blake* started for the Windward Islands for the purpose of making more anchorages in that vicinity, with the view of ascertaining whether certain theories that had been advanced during the study of the previous year's investigations would be sustained by further information. With this object in view Lieutenant Pillsbury submitted no discussion of the investigations and results of the preceding year, but the complete report of the work of the two seasons, with the conclusions to be drawn from them, will be placed before you this year.

The *Blake* made several anchorages in Old Bahama Channel, and north of the Bahama Islands, in the months of January and February. The latter observations were made with the view of ascertaining the depth, strength, and direction of the strong current which flows to the northward of the West Indies and the Bahama Islands, on which depends greatly the currents flowing to the northward and eastward between the Bermudas and the coast of the United States.

Anchorages were also made off Hatteras in depths as great as 1,985 fathoms, and the work was gradually carried up off Nantucket and George's Bank. Great credit is due to Lieutenant Pillsbury, commanding the *Blake*, for the skill exhibited in planning all the apparatus for the investigation of the Gulf Stream and the energy displayed in pushing the work. It is to be hoped that an opportunity will be afforded him at the end of the season to put in proper shape in a comprehensive report the results of his four years' investigations. Such a report, embracing, as it would, many new ideas regarding the Gulf Stream and ocean currents generally, would be very interesting, not only to the scientist, but to the student and general reader.

With the view of supplementing the information gained by the *Blake* in regard to surface currents, you proposed in a letter addressed to me on the 12th of December, 1888, that a float be

made of tin tube of 8 to 10 feet in length, with wings on the bottom, for the purpose of increasing the area of the submerged parts. These special free floats were proposed to do away with the objection that exists to the use of the current bottles, which were more influenced by the wind and sea than by the current.

Greatly assisted by Mr. Fischer, the chief mechanician of the instrument shop, a wooden float about 10 feet long, to be submerged 8 feet, was decided upon as meeting the requirements of your letter of the 12th of December, 1888, and one hundred of these were made.

Some have already been set adrift by the *Blake*, and others are in New York awaiting the sailing of a vessel of war. As the floats will be but little influenced by the wind and sea I am strongly of the opinion that the results to be obtained from them will be very valuable.

## PACIFIC COAST.

On May 25, Lieut. H. B. Mansfield, U. S. N., assumed charge of the hydrographic party on board the steamer *Hassler*, at Mare Island, California, and proceeded to prepare for hydrography off Crescent City, California, and to make an examination of Mission Rock, San Francisco Bay.

There being an urgent necessity for the completion of the survey in the vicinity of San Diego, California, and the condition of the boiler of the steamer *McArthur* making that vessel unavailable, it became necessary on the 13th of October to direct Lieutenant Mansfield to close work on the northern coast and to prepare for work south.

On the 15th of October Lieutenant Mansfield proceeded with the *Hassler* to San Diego, California, and commenced the hydrography of that coast. The work proceeded under his direction with more rapidity than was expected, owing to the short distance of the one hundred fathoms contour from the coast. On the 1st of March Lieutenant Mansfield was detached from the command of the *Hassler* and assigned to the *Patterson* preparatory to taking command of that vessel.

He turned over the party to the command of Lieut. Dennis H. Mahan, U. S. N., pending the arrival of Lieut. Daniel Delehanty, U. S. N., who assumed charge of the *Hassler* on March 18, and completed the remaining hydrography.

On the 10th of April the *Hassler* closed work in the vicinity of San Diego, California, and proceeded to San Francisco to prepare the vessel for work elsewhere.

On the 20th of April Lieut. J. M. Helm, U. S. N., took the *Gedney* into San Francisco after a successful and uneventful trip from New York of one hundred and fifty-eight days.

The development of defects in the main shaft, which required extensive repairs, and the high price of coal, owing to the small quantities purchased at a time, fully warranted the anticipations of the necessity for the deficiency appropriation which was only partly allowed by the last Congress. The lack of funds available made it impossible for the *Gedney* to proceed to Alaska during this season, so on the 25th of May Lieutenant Helm proceeded to Port Orford, Oregon, and commenced the hydrography in that vicinity, which is progressing as rapidly as the weather and fogs would permit at the close of the year.

On the 5th of June the *Hassler*, under command of Lieut. D. Delehanty, U. S. N., left San Francisco, and on the 8th arrived at the mouth of Rogue River, Oregon, for the purpose of making an examination of the entrance, but owing to bad weather was unable to do anything, so proceeded to his working ground in the vicinity of Crescent City, California, and began the hydrography there; and at the close of the year the vessel was still engaged on the work.

The beginning of the year found Lieut. J. C. Burnett, U. S. N., commanding the steamer *McArthur*, engaged upon the hydrography in the vicinity of Cape Flattery, Washington. As there had been only a reconnaissance of the topography in this vicinity, the work was prosecuted with some difficulty.

The work was much delayed by fogs during the whole season, and on October 2 the weather became so unsettled that it was impossible to carry on the work any longer with good results, so Lieutenant Burnett, in accordance with instructions, closed work and proceeded to San Francisco.

It was intended to complete the repairs of the *McArthur* in time to commence work this

present season, but the delay in the passage of the deficiency bill by Congress, and the discovery of greater weakness in the boiler than was first expected, has resulted in the *McArthur's* remaining at San Francisco at the close of the year.

On March 24 Lieut. J. C. Burnett was detached from the survey by the Navy Department, and was relieved in command of the *McArthur* by Lieut. Dennis H. Mahan, U. S. N.

On July 1 Lieut. H. T. Mayo, U. S. N., commanding the schooner *Earnest*, was engaged in the survey of Saratoga Passage and Rosario Strait, in Washington Sound, Washington, his party having gone in the field in April.

This work was prosecuted with so much energy that, as a rule, the hydrography was up with the topography, although the necessary data had to be obtained from the topographic parties in the field before its verification in the office.

The approach of the wintry season rendered it unwise to continue field work, and on October 25 the *Earnest* closed field work and proceeded to Olympia to prepare the records for transmission to the office.

During the interval when bad weather prevented field work the *Earnest* was put in good repair, and on May 16 left Olympia and proceeded to Anacortes. The hydrographic survey of Skagit Bay was commenced.

On June 16 Lieut. H. T. Mayo was detached from duty with the Survey and was relieved in command of the *Earnest* by Lieut. J. N. Jordan, U. S. N., who, at the close of the year, is proceeding with the work as rapidly as the lack of the topographic data ordinarily provided from the office will permit.

During the year the gap in the hydrography off the coast of California, between San Diego and Newport Bay, has been completed, and the data is now ready to be put on the charts.

The gap near Crescent City has been partly filled, and in a short time will be completed.

There remain unsurveyed on this coast limited areas, which can be readily completed, with liberal appropriations, in two seasons. This, with some additional deep-sea work to connect the hydrography off the mainland with the off-lying islands, will practically complete the hydrography off the coast of California, except local hydrographic surveys that may be needed to construct harbor charts on large scales, and correct and complete charts already published.

There is, however, a long extent of coast line in Oregon and Washington which may require several seasons of steady work to complete. In almost every portion, however, the shore is so bold as to render the publication of any but small scale charts unnecessary.

## ALASKA EXPLORATIONS.

On the 7th of April, 1888, the steamer *Patterson*, under command of Lieut. Commander C. M. Thomas, U. S. N., left San Francisco for Alaska, arriving at Port Simpson on April 23. After a delay of two days fitting out the steam-launch *Cosmos*, and taking astronomical observations, the *Patterson* proceeded to Stephens Passage and at once began the work in that vicinity—a fair locality for the measurement of a base-line having been found on Glass Peninsula. A line of 3,875.97 meters, over water, was measured three times with excellent results. As far as I can ascertain, this method of measuring a base-line, using piano wire over water, is original with the Alaska survey—it first having been used in 1886. It became necessary to devise some other than the ordinary method on account of the impossibility of finding any suitable location on shore for a base-line. The method of conducting this measurement is very completely set forth in the able report to you from the chief of party, Lieut. Commander C. M. Thomas, U. S. N.

A request having been made in April by the Department of State for a survey of Portland Canal, the boundary between Alaska and British Columbia, instructions were sent Commander Thomas to stop work in Stephens Passage about July 1, and to proceed to the former locality and take up the survey there, giving great attention to the accuracy of astronomical work and shore-line.

The finished sheets of this survey, submitted to you on the 17th of June, bear testimony of the very accurate and rapid work executed by Commander Thomas and his party.

The work in Portland Canal was finished on the 13th of October, and the *Patterson* proceeded to San Francisco after stopping at Port Simpson to lay up the *Cosmos*.

The party in the *Patterson* were busy most of the winter with the office work.

On the 1st of April Commander Thomas was detached from command of the *Patterson*, and ordered to special duty at the Coast and Geodetic Survey office until July 1, 1889, when he will take up the duties of Hydrographic Inspector of the Survey.

Commander Thomas was relieved in command of the *Patterson* by Lieut. H. B. Mansfield, U. S. N., who had been for some months in command of the *Hassler*. This officer's excellent standing as a hydrographer is a guarantee that the work will be kept up to the high standard to which it has been brought by the efforts of all his predecessors.

In April the *Patterson* proceeded north again, and a telegram from Lieutenant Mansfield on the 1st of May announced his arrival on the working ground.

## REPAIRS OF VESSELS.

An experience of four years in the office has convinced me that the annual appropriation for repairs to the vessels of the Survey is not sufficient. The amount allowed, $25,000, is enough when only ordinary repairs are required, but when an unusual number of extensive repairs to vessels, the engines, boilers, and steam-launches are required during the same year the amount is entirely inadequate.

During the past fiscal year the repairs to the *Gedney*, *Endeavor*, and the *Blake* cost about $15,000, leaving only $10,000 for the other twenty vessels of the Survey.

The *Blake* was docked, her sheathing stripped off, refastened and recalked, new deck laid, and other minor repairs made—all necessary to place her in condition for the deep-sea work on which she has been engaged for many years.

It having been decided in October to send the *Gedney* to the Pacific for use in the Boundary Survey of Alaska, it became necessary to give her a complete overhauling and supply her with a new steam-launch.

To take the place of the *Gedney* in the Gulf work, it became necessary to fit out the *Endeavor*, resulting in practically having to rebuild her upper works.

The schooner *Transit*, a sharpie of light draught for use in the shallow bays of the Gulf, has proved, like her prototype, a great success, but unfortunately she did not arrive at Pensacola in time for last winter's work.

The *McArthur's* boiler was reported by the commanding officer to be in such a condition as to necessitate extensive repairs, and a special appropriation of $3,680 was asked for and obtained with which to repair it. On cutting into it, however, the boiler was found to be in so much worse condition than was expected that it would be more economical to build a new one, and arrangements have accordingly been made with the Bureau of Steam Engineering, Navy Department, to build one for the sum of $6,500.

I have to earnestly recommend that the appropriation for "Repairs of vessels" be increased from $25,000 to $30,000.

I have also to call your attention to the fact that a small steamer of not more than 5 feet draught is greatly needed in the Survey.

The only steamer of light draught now in the Survey is the *Arago*, but her condition is such that I have to recommend that she be sold.

## HYDROGRAPHIC DIVISION.

The Hydrographic Division has been under the charge of Lieut. M. L. Wood, U. S. N., during the year. During his temporary absences from the Office, Ensign E. H. Tillman, U. S. N., was given charge of the Hydrographic Division in addition to his regular duties.

The work of the Division has been of its usual varied character, and the results are shown in the increased accuracy of the charts published by this office, and by the reduced number of corrections to be applied by hand to the charts before their issue from the Chart Room, although the number of copies issued have largely increased.

As the result of several changes in the routine of furnishing corrections for the copper plates and for the Chart Room, the charts published by this Office are practically correct for purposes of navigation for all important information received at this Office to the date of issue, and are for all practical purposes the equals of any in the world, both for the information given and the ease with which they can be kept corrected for purposes of navigation.

The "Notices to Mariners," giving information of all important corrections to charts of the United States, are now published monthly. The change from quarterly to monthly has been proved to be advantageous, and a further change to weekly instead of monthly should be made as soon as satisfactory arrangements for prompt printing can be effected.

I also call your attention to the necessity for increasing the means for printing charts rapidly enough to supply the increased demand. The ability of the Office to furnish copies of charts promptly would add much to a just appreciation of the work of the Office by the sea-faring community.

Owing to the increase in the amount of work passing through the Division, I recommend that an additional draughtsman be assigned. This will enable the Division to begin the much and long needed work of eliminating discrepancies among the published charts by a systematic overhauling and comparison.

## COAST PILOT DIVISION.

The Coast Pilot Division was under the immediate supervision of Lieut. G. H. Peters, U. S. N., until the time of his detachment, November 25, 1888, since which date Ensign Edwin H. Tillman, U. S. N., has had charge of it, and his annual report is submitted herewith.

Although during the greater part of the time since the detachment of Lieutenant Peters, the work of compiling Coast Pilot manuscript has been done wholly by Ensign Tillman and Mr. John Ross, there has been no time when the printer has not had in hand the manuscript of one or more volumes, and other manuscript has been prepared and is ready to put in type when arrangements can be made with the printer to do so.

It is very desirable that some arrangement should be made by which Coast Pilot manuscript can be put in type with greater rapidity. Your attention is specially called in connection with this subject to the annual report of the Coast Pilot Division transmitted herewith.

In accordance with the scheme submitted by Lieutenant Peters, and approved by you, work has been devoted to the preparation of manuscript of a large volume to cover the Atlantic Coast of the United States. A portion of the manuscript is now in type and will be issued as soon as received from the printer, as United States Coast Pilot, Part IV, "Long Island Sound with Approaches and Adjacent Waters." The next part to be issued, the manuscript of which is now ready for the printer, is Part VI, "Chesapeake Bay and Tributaries."

Sub-Division 22, "Atlantic Local Coast Pilot, Straits of Florida," is now in press.

## ALASKA COAST PILOT.

Lieut. Commander H. E. Nichols, U. S. N., has been occupied during the fiscal year in collecting data for and rewriting the Alaska Coast Pilot.

At the beginning of the fiscal year Lieutenant Commander Nichols was in Alaska collecting data, and making personal observations along the coast. He arrived in San Francisco, Cal., August 25, 1888, but left again on September 20, 1888, to visit Southeast Alaska, in connection with his work of rewriting the Alaska Coast Pilot, returning October 19, 1888. Since that time he has been engaged in putting the data collected in shape for publication.

His report for the fiscal year has not yet been received.

The clerical work of this Office, which is laborious and exacting, has been performed to my entire satisfaction by Mr. J. H. Roeth.

There is transmitted herewith the following:

Report of Hydrographic Division.

Report of Coast Pilot Division.

List of Naval Officers attached to the Coast and Geodetic Survey during the fiscal year ending June 30, 1889.

Names of vessels, their tonnage, etc., in the service of the Coast and Geodetic Survey during the fiscal year ending June 30, 1889.

Number of men attached to Coast and Geodetie Survey vessels during the fiscal year ending June 30, 1889.

Very respectfully,

W. H. BROWNSON,
*Lieutenant-Commander, U. S. Navy,*
*Hydrographic Inspector, U. S. Coast and Geodetic Survey.*

The SUPERINTENDENT.

---

*REPORT OF THE HYDROGRAPHIC DIVISION, COAST AND GEODETIC SURVEY OFFICE, FOR THE FISCAL YEAR ENDING JUNE 30, 1889.*

U. S. COAST AND GEODETIC SURVEY OFFICE,
*Washington, D. C., June 29, 1889.*

SIR: I submit the following report of the work executed by the Hydrographic Division, under my charge, during the fiscal year ending June 30, 1889.

During my temporary absences from the Office from July 1, 1888, to October 4, 1888, while in charge of a hydrographic party on board the steamer *Endeavor*, and from May 4 to 25, 1889, while on leave of absence, Ensign E. H. Tillman, U. S. N., acted as chief of the Division.

During the year the following draughtsmen have been attached to the Division, and have performed all duties assigned them with zeal and intelligence: Mr. Eugene Willenbucher, Mr. W. C. Willenbucher, Mr. F. C. Donn, and Mr. E. H. Wyvill. Owing to a request for his services as an observer in the field, Mr. W. C. Willenbucher was away from the Division while on board the steamer *Endeavor* from August 16 to August 31, 1888, when he resumed his regular duties.

Ensign E. A. Anderson, U. S. N., was also attached to the Division temporarily, while working up records preparatory to registry in the archives, from January 20 to February 25, 1889.

The detailed results, as far as it is practicable to tabulate them, of the work executed by each draughtsman will be found at the end of this report.

*Hydrographic statistics for the fiscal years* 1886–1889, *inclusive.*

| Fiscal year ending June 30— | Sheets. | Volumes. | Angles. | Soundings. | Miles run. | Square miles. |
|---|---|---|---|---|---|---|
| 1886 | 63 | 377 | 117,588 | 567,968 | 14,932 | 8,701 |
| 1887 | 74 | 470 | 134,301 | 661,682 | 17,557 | 11,285 |
| 1888 | 67 | 373 | 130,677 | 609,903 | 19,912 | 11,875 |
| 1889 | 65 | 373 | 106,159 | 599,009 | 18,787 | 15,428 |

This statement shows that the amount of work is about constant, and that the present force is capable of preparing for use the amount of data likely to accumulate during the year. Since, however, all the work in other Divisions of the Office that is based upon the plotting of the soundings on the finished hydrographic sheets can not be decided upon or laid out intelligently or economically until the data has been put in a form for reference, and all errors eliminated, a due regard for economy and efficiency demands that all the available hydrographic data for selection in compiling charts should be put in a state for comparison with the least possible loss of time.

To have a force in the Hydrographic Division large enough to permit each season's work of every party to be put in hand as soon as received from the field would be the theoretical method, but as this would seem inadvisable under the present conditions of the Office force, a compromise

might be effected by increasing the force in the Division by an additional draughtsman, and using any spare time that may result from this increase in overhauling and comparing the different charts covering the same localities, with the view of eliminating many discrepancies and some errors that are known to exist.

As any addition to the present force would require a long time in order to secure the services of a draughtsman under the present system of civil service appointment, and the work of the Division might get behind so far as to delay seriously the work of the other Divisions in the Office, I recommend that steps be taken at once to make the increase in the number referred to above.

The duties required of a hydrographic draughtsman necessitate for rapid work a fair knowledge of practical seamanship, in order to interpret the records and reconcile apparent discrepancies in the field sheets. Those capable of filling the requirements are very few in number, and are so widely scattered that the selection would be difficult, even without the uncertainties attending civil service appointments.

In this same connection I urge that proper arrangements be made to have the chief of this Division placed permanently upon any board for securing the appointment of draughtsmen for hydrographic work, through the Civil Service Commission.

It is with feelings of considerable satisfaction that I call your attention to the recent practical recognition of the success of the new routine for correcting Coast and Geodetic Survey charts adopted in consequence of your recommendation by the Hydrographic Office of the Navy Department.

Arrangements have just been completed for sending charts as directly as possible from this office to the various naval vessels without the supplementary correction formerly considered and frequently found necessary under the old system of chart correction.

The Monthly Notices to Mariners, compiled from the records of this Division, have been found useful in assisting navigators to keep their charts corrected to date. The circulation of these Notices is now quite large, and efforts are being made, for the convenience of the Mercantile Marine, to supply copies of each issue to every Collector of Customs in the United States, and to all United States Consulates abroad.

A weekly issue would be advantageous and should be adopted, provided arrangements can be made for more rapid printing. I recommend that steps be taken with a view to obtaining the assignment of printers and a printing-press to this building from the main Government Printing Office, for the purpose of getting out the Notices to Mariners every week without the loss of time that is unavoidable as long as the proofs have to be carried from one part of the city to another.

In order to obtain chart corrections with precision and accuracy, large numbers have to be sent to various authorities for verification or to obtain information.

The increase in the number of charts sold during the past few years has been quite marked, while the printing arrangements are much the same as when only a small proportion of the present stock was required. The result has been that the lack of copies of charts required to gather information renders it impossible at times to verify corrections before engraving, and adds much work to the already numerous duties exacted from the Division.

Besides this delay and the increase in labor, the scarcity of charts seriously interferes with the proper business reputation of the office.

I therefore suggest, as the demand is evidently increasing, that it would be to the advantage of the Survey to materially add to the means for printing charts.

I also call to your attention the fact that it would add much to the value of the charts of the Coast and Geodetic Survey if the time between the completion of the field-work and the publication of the data obtained from a survey were reduced at every possible point. The lithographic work has been brought out so promptly in some cases as to show that dispatch is not inconsistent with accuracy, and to bring into greater prominence the delay in publishing charts from copper plates.

For the use of the navigator the value of a chart deteriorates greatly with the age of the data upon which it is based.

I have to call to your attention the numerous reports that have been received at the Office relating to dangers that have been discovered in localities covered only by preliminary surveys with

old instruments and methods in which the hydrography has not been sufficiently close to answer the needs of the commerce of the present day, while sufficiently detailed for all purposes at the time the survey was made.

I suggest that additional and closer hydrography is much needed along the New England coast from Portland, Me., to Newburyport, Mass., and in the Hudson River, New York, where the rocky character of the shore admits of a survey lasting for all time when once made, and the bottom makes it possible for dangers to escape any but the closest search.

The interests of commerce also demand new surveys in the vicinity of Nantucket, along the Jersey coast, in the Delaware River, and in Chesapeake Bay and its tributaries, as the hydrographic sheets of these localities are at present known to be erroneous in many respects, and not to be depended upon for any but the most general details.

The following has been the general assignment of work in the Division, subject to changes from urgent demands for special work: To Mr. Eugene Willenbucher, inspection of drawings and finished charts, Alaska sheets, Atlantic and Gulf coast sheets. To Mr. W. C. Willenbucher, preparing field records for registry, preparing notes for charts, miscellaneous work Atlantic coast and Atlantic and Gulf coast sheets. To Mr. F. C. Donn, miscellaneous work and Pacific coast sheets. To Mr. E. H. Wyvill, chart corrections from all sources, correcting proofs for engraving and sample charts, for Chart Room and miscellaneous work, and in addition preparing letters relating to work in the Division for your signature.

The statement of work performed is as specific as the space available and the varied character of the work will permit.

Very respectfully,

M. L. WOOD,
*Lieutenant, U. S. N.,*
*Chief of Hydrographic Division,*
*Coast and Geodetic Survey Office.*

Lieut. Commander W. H. BROWNSON, U. S. N.,
*Hydrographic Inspector, U. S. Coast and Geodetic Survey.*

---

*Original hydrographic sheets plotted, verified, and inked during the fiscal year ending June 30, 1889.*

| Register No. | Titles of sheets. | Scale. | Draughtsman. | Remarks. |
|---|---|---|---|---|
| | ATLANTIC COAST. | | | |
| 1793 | Passamaquoddy Bay, Eastport to Frost's Cove | 1-10000 | W. C. Willenbucher | Plotted and drawn. |
| 1794 | Passamaquoddy Bay, Frost's Cove to mouth of St. Croix River | 1-10000 | do | Do. |
| 1795 | St. Croix River from its mouth to Oak Point | 1-10000 | do | Do. |
| 1796 | St. Croix River from Oak Point to Calais | 1-10000 | do | Do. |
| 1798 | Cobscook Bay, sheet No. 1, Maine | 1-10000 | do | Do. |
| 1838 | Cobscook Bay, sheet No. 2, Maine | 1-10000 | do | Do. |
| 1839 | Cobscook Bay, sheet No. 3, Maine | 1-10000 | do | Do. |
| 1840 | Cobscook Bay, sheet No. 4, Maine | 1-10000 | do | Do. |
| 1835 | Off Black Rock, Maine | 1-10000 | E. Willenbucher | Do. |
| 1836 | Off coast of Maine, Matinicus Rock to Seguin Island | 1-40000 | W. C. Willenbucher | Do. |
| 1903 | East shore of Cape Cod, Highland Light to Cahoon's Hollow | 1-10000 | do | Do. |
| 1902 | East shore of Cape Cod, Cahoon's Hollow to Nausett Lights | 1-10000 | do | Do. |
| 1901 | East shore of Cape Cod, off Chatham Beach | 1-10000 | do | Do. |
| 1837 | Off George's Bank and Nantucket Shoals | 1-100000 | E. Willenbucher | Verified and finished. |
| 1880 | Nantucket and Vineyard Sounds, Hyannis to Falmouth | 1-20000 | F. C. Donn | Plotted and drawn. |
| 1879 | Nantucket Sound inside of Muskeget Channel | 1-20000 | do | Do. |
| 1844 | Muskeget Channel, Nantucket Sound | 1-20000 | E. Willenbucher | Do. |
| 1843 | Approach to Vineyard Sound and south of Martha's Vineyard Island. | 1-40000 | F. C. Donn | Do. |
| 1832 | Vineyard Sound, West Chop to Robinson's Hole | 1-20000 | E. Willenbucher | Protracted, plotted, and drawn. |
| 1833 | Wood's Holl, Mass | 1-5000 | do | Plotted and drawn. |
| 1820 | Middle Ground, Stonington Harbor, Connecticut | 1-10000 | W. C. Willenbucher | Do. |

*Original hydrographic sheets plotted, verified, and inked, etc.*—Continued.

| Register No. | Titles of sheets. | Scale. | Draughtsman. | Remarks. |
|---|---|---|---|---|
| | ATLANTIC COAST—*continued.* | | | |
| 1834 | Rockaway Inlet, New York | 1-5000 | F. C. Donn | Plotted and drawn. |
| 1875 | Fisherman's Island and Smith's Island Inlets, Virginia | 1-10000 | E. Willenbucher | Do. |
| 1873 | *Chesapeake entrance, Little Inlet to Cape Henry, Virginia* | 1-20000 | ....do | Do. |
| 1874 | Chesapeake entrance, Old Plantation Shoal to Cape Henry, Virginia. | 1-20000 | ....do | Do. |
| 1876 | Horseshoe Shoal, Chesapeake Bay, Virginia | 1-20000 | F. C. Donn | Do. |
| 1842 | Annapolis Harbor, Maryland | 1-10000 | W. C. Willenbucher | Do. |
| 1830 | Entrance to St. Simon's Sound, Georgia | 1-20000 | F. C. Donn | Protracted, plotted and drawn. |
| 1828 | Florida Bay, Northwest Passage light-house to Content Key | 1-40000 | E. Willenbucher | Plotted and drawn. |
| 1827 | Florida Bay, Content Key to Northwest Cape | 1-40000 | F. C. Donn | Do. |
| 1826 | Florida Bay, Pavilion Key to Northwest Cape | 1-40000 | E. Willenbucher | Do. |
| 1825 | Florida Bay, off-shore work | 1-80000 | F. C. Donn | Do. |
| 1823 | Atchafalaya River, Louisiana, from its mouth to Morgan City, sheet 1. | 1-10000 | ....do | Do. |
| 1834 | Atchafalaya River, Louisiana, from its mouth to Morgan City, sheet 2. | 1-10000 | ....do | Do. |
| 1831 | Off coast of Louisiana, longitude 91° 40′ to Marsh Island | 1-80000 | E. Willenbucher | Do. |
| 1776 | Off coast of Louisiana, Marsh Island to Harbor △ | 1-80000 | ....do | Do. |
| 1777 | Vermilion Bay, Louisiana, sheet No. 1 | 1-20000 | ....do | Do. |
| 1819 | Vermilion Bay, Louisiana, sheet No. 2 | 1-20000 | ....do | Do. |
| 1821 | Vermilion Bay, Louisiana, sheet No. 3 | 1-20000 | ....do | Do. |
| 1822 | Vermilion Bay, Louisiana, sheet No. 4 | 1-20000 | ....do | Do. |
| | PACIFIC COAST. | | | |
| 1888 | Coast of California, Boundary Monument to Sand Ridge △ | 1-20000 | W. C. Willenbucher | Plotted and drawn. |
| 1889 | *Coast of California, extension of sheet No. 1888* | 1-20000 | ....do | Do. |
| 1905 | Coast of California, Sand Ridge △ to Leucadia △ | 1-20000 | ....do | Do. |
| 1906 | Coast of California, Leucadia △ to Barranca Bluff △ | 1-20000 | ....do | Do. |
| 1907 | Coast of California, Barranca Bluff △ to Dana △ | 1-20000 | ....do | Do. |
| 1908 | Coast of California, Dana △ to Dane △ | 1-20000 | ....do | Do. |
| 1904 | Location of shoal off Point Fermin, California | 1-40000 | ....do | Protracted, plotted, and drawn. |
| 1882 | Hospital Cove, Angel Island, San Francisco Bay | 1-10000 | ....do | Verified and finished. |
| 1883 | Mission Bay Rock, San Francisco Bay, California | 1-120 | ....do | Do. |
| 1784 | Sacramento and San Joaquin Rivers, California | 1-20000 | F. C. Donn | Plotted and drawn. |
| 1785 | *Suisun Bay, Grizzly Bay, Suisun and Montezuma Creeks* | 1-20000 | ....do | Do. |
| 998 | Entrance to Yaquina Bay, Oregon | 1-10000 | ....do | Do. |
| 1845 | Vicinity of Cape Flattery, Washington | 1-40000 | ....do | Do. |
| 1881 | Neeah Harbor, Washington | 1-10000 | ....do | Do. |
| | EXAMINATIONS OF REPORTED DANGERS. | | | |
| 1829 | Vineyard Sound, Cape Poge to West Chop | 1-10000 | W. C. Willenbucher | Protracted, plotted, and drawn. |
| 1704 | Off Sunken Meadow, East River, New York | 1-2500 | ....do | Do. |
| 1683 | Off New Rochelle Harbor, New York | 1-10000 | ....do | Do. |
| 1659 | Wallabout Bay, East River, New York | 1-5000 | ....do | Do. |

*Synopsis from the records of the hydrographic sheets plotted and drawn during the fiscal year ending June* 30, 1889.

| Names of draughtsmen. | Sheets. | Volumes. | Angles. | Soundings. | Miles. | Deep-sea soundings. |
|---|---|---|---|---|---|---|
| Eugene Willenbucher | 16 | 159 | 43,579 | 277,430 | 8,432½ | ..... |
| William C. Willenbucher | 23 | 123 | 37,009 | 135,975 | 3,265¼ | 65 |
| F. C. Donn | 15 | 140 | 39,662 | 246,840 | 6,796¼ | ..... |
| Grand total | 54 | 422 | 120,250 | 660,245 | 18,494 | 65 |

NOTE.—From August 16 to August 31, inclusive, W. C. Willenbucher was temporarily attached to the party of Lieut. M. L. Wood, U. S. N., at Annapolis, Md.

*Verification, revision, and correction of reduced drawings of hydrography, for the fiscal year ending June 30, 1889.*

[* New charts, first issues. † New editions.]

| Catalogue number of charts. | Title of charts. | Scale. | Draughtsmen. |
|---|---|---|---|
| A | Cape Sable to Cape Hatteras | 1-1200000 | E. Willenbucher. |
| *6-a | Quoddy Head to Isle au Haut | 1-400000 | E and W. C. Willenbucher. |
| *6-b | Isle au Haut to Cape Cod | 1-400000 | Do. |
| †7 | Cape Ann to Gay Head | 1-400000 | E. Willenbucher. |
| †10 | Cape Henry to Cape Lookout | 1-400000 | Do. |
| †11 | Cape Hatteras to Cape Romain | 1-400000 | Do. |
| 18 | Cape San Blas to Mississippi Passes | 1-400000 | Do. |
| 112 | Muskeget Channel to Buzzard's Bay | 1-80000 | Do. |
| †113 | Cuttyhunk to Block Island | 1-80000 | W. C. Willenbucher. |
| *114 | Point Judith and Block Island to Plum Island | 1-80000 | E. Willenbucher. |
| 114-a | Eastern part of Long Island Sound | 1-80000 | W. C. Willenbucher. |
| 116 | Long Island Sound, western sheet | 1-80000 | Do. |
| *119 | Fire Island Beach to Rockaway Beach | 1-80000 | E. Willenbucher. |
| †120 | New York Bay and Harbor | 1-80000 | W. C. Willenbucher. |
| *126 | Delaware Bay and River, upper sheet | 1-80000 | E. Willenbucher. |
| †127 | Cape May to Isle of Wight | 1-80000 | Do. |
| 136 | Chesapeake Bay, Magothy River to Head of Bay | 1-80000 | Do. |
| 141 | Albemarle Sound, western sheet | 1-80000 | Do. |
| 146 | Coast Chart No. 146 | 1-80000 | Do. |
| 148 | Bogue Inlet to New Topsail Inlet | 1-80000 | Do. |
| 168 | Long Key to Newfound Harbor Key | 1-80000 | W. C. Willenbucher. |
| 169 | Newfound Harbor Key to Boca Grande Key | 1-80000 | Do. |
| 199 | Point au Fer to Cote Blanche | 1-80000 | E. Willenbucher. |
| 204 | Galveston Bay | 1-80000 | Do. |
| †337 | Boston Harbor | 1-40000 | E. and W. C. Willenbucher. |
| 343 | Nantucket Harbor | 1-10000 | Do. |
| 347 | Vineyard Haven, Mass | 1-10000 | Do. |
| 353 | Narragansett Bay | 1-40000 | E. Willenbucher. |
| †359 | New London Harbor and Entrance to Thames River | 1-20000 | Do. |
| *361-4 | Port Jefferson | 1-10000 | Do. |
| 361-5 | Throg's Neck to New Rochelle | 1-10000 | Do. |
| *361-6 | New Rochelle to Manursing Island | 1-10000 | Do. |
| *361-7 | Black Rock Harbor and Bridgeport Harbor | 1-10000 | Do. |
| †369 | New York Bay and Harbor | 1-40000 | Do. |
| *384-2 | Baltimore Harbor | 1-10000 | Do. |
| *385 | Annapolis Harbor | 1-10000 | W. C. Willenbucher. |
| 392 | Rappahannock River, Sheet No. 1 | 1-60000 | E. Willenbucher. |
| 393 | Rappahannock River, Sheet No. 2 | 1-60000 | Do. |
| 394 | Rappahannock River, Sheet No. 3 | 1-20000 | Do. |
| 395 | Rappahannock River, Sheet No. 4 | 1-20000 | Do. |
| 396 | Rappahannock River, Sheet No. 5 | 1-20000 | Do. |
| 397 | Rappahannock River, Sheet No. 6 | 1-20000 | Do. |
| *404 | Norfolk Harbor | 1-10000 | Do. |
| *422 | New River Inlet | 1-10000 | Do. |
| 447 | St. Simon's Sound, Brunswick Harbor, etc | 1-40000 | Do. |
| 520 | Galveston Harbor | 1-40000 | Do. |
| *522-a | Pass Cavallo | 1-30000 | Do. |
| †540-a | Rockaway Inlet | 1-25000 | F. C. Donn. |
| *602 | San Francisco Bay to Strait of Juan de Fuca | 1-1200000 | F. C. Donn and E. Willenbucher. |
| 606 | San Diego Bay | 1-40000 | F. C. Donn. |
| *609* | San Juan Capistrano | 1-10000 | Do. |
| 615 | Vicinity of Point Pinos | 1-12000 | E. Willenbucher. |
| *616 | Lompoc Landing | 1-5000 | Do. |
| 635 | St. George's Reef and Crescent City | 1-40000 | Do. |
| †636 | Coquille River Entrance | 1-10000 | Do. |
| †643 | Gray's Harbor | 1-40000 | Do. |
| *651 | Seattle Harbor | 1-20000 | E. Willenbucher and F. C. Donn. |

*Verification, revision, and correction of reduced drawings of hydrography, etc.*—Continued.

| Catalogue number of charts. | Title of charts. | Scale. | Draughtsmen. |
|---|---|---|---|
| 664 | Yaquina River Entrance | 1-20000 | F. C. Donn. |
| *668 | Santa Monica | 1-20000 | Do. |
| 669 | San Luis Obispo Bay and Approaches | 1-20000 | Do. |
| †684 | Sea Coast and Interior Harbors of Washington Territory, etc | 1-300000 | F. C. Donn and W. C. Willenbucher. |
| 685 | Admiralty Inlet | 1-80000 | E. Willenbucher. |
| *693 | Entrance to Eel River | 1-20000 | Do. |
| 673 | Santa Rosa Island to Point Buchon | 1-200000 | F. C. Donn. |
| *705 | Frederick Sound and North Part of Sumner Strait | 1-200000 | E. Willenbucher. |
| *712 | St. John Harbor | 1-20000 | Do. |
| *716 | Steamer Bay, Etolin Island | 1-20000 | Do. |
| *717 | Ratz Harbor, Prince of Wales Island | 1-10000 | Do. |
| *718 | Dewey Anchorage, Etolin Island | 1-20000 | Do. |
| *719 | Red Bay, Prince of Wales Island | 1-20000 | Do. |
| *720 | Port McArthur, Kuiu Island | 1-10000 | Do. |
| *721 | Port Protection, Prince of Wales Island | 1-20000 | Do. |
| *729 | Etolin Harbor | 1-10000 | Do. |
| *730 | Shakan Strait, Prince of Wales Island | 1-20000 | Do. |
| *733 | Harbors of Thomas Bay, Farragut Bay, and Portage Bay | 1-40000 | W. C. Willenbucher. |
| *800 | Wrangel Strait and Duncan Canal | 1-40000 | E. Willenbucher. |
| *823 | Akun Cove, Akun Island | 1-10000 | F. C. Donn. |

*Miscellaneous draughting done during the fiscal year ending June* 30, 1889.

| Description. | Draughtsmen. |
|---|---|
| Reducing hydrographic sheet 1837, off George's Shoal and Nantucket Shoals, for Charts Catalogue No. A and 7. | E. Willenbucher. |
| Reducing hydrographic sheet 1840, Muskeget Channel, for Chart No. 112 | Do. |
| Reducing hydrographic sheets 1873 and 1874, Chesapeake entrance for Chart Catalogue No. 131. | Do. |
| Reducing Engineeer's survey of Buttermilk Channel for Chart No. 369 | W. C. Willenbucher. |
| Reducing additional hydrography for Chart No. 114 | Do. |
| Reducing line of deepest water, Savannah River, to Charts 155 and 440 | Do. |
| Reducing dredged channel, Sewall's Point, Elizabeth River, for Chart 403 | Do. |
| Defining limits for New York anchorage grounds and preparing map of same | Do. |
| Preparing final map of anchorage grounds | Do. |
| Defining limits of New York anchorage grounds (as amended June, 1889), etc | Do. |
| Tracing of hydrographic sheet, 1833, Wood's Holl (for party) | E. Willenbucher. |
| Plotting aids to navigation on Chart 361-6 | Do. |
| Plotting additional data on Chart 10 | Do. |
| Overhauling selection of lights for new edition of A and B | Do. |
| Overhauling tidal data for charts of Mobile River | Do. |
| Drawing curves of equal depths on charts of Baltimore Harbor, Fort Mifflin Bar, Delaware Bay and Annapolis Harbor (blue print). | W. C. Willenbucher. |
| Tracings of curves of Chart 120; Akun Cove; Hempstead Harbor; near Sunken Meadows, East River; Wallabout Bay, East River; Plum Gut; hydrographic sheet, 1827 (Florida Bay, Content Key to Northwest Cape), Niblack anchorage; △ sketch northern part of Frederick Sound; 3 small tracings of Escambia Bay; 2 tracings of Port Orchard. | Do. |
| Compilation of hydrography between Key West and Punta Rasa, 1-80000 | Do. |
| Furnishing additional data for various charts, for use of Light-House Inspector | Do. |
| Overhauling and comparing numerous charts as to their similarity | Do. |
| Recording history of floats deposited by steamer *Blake* | Do. |
| Plotting reported dangers on charts and original sheets; examining original records | Do. |
| Preparing 8 hydrographic sheets and 27 oyster-bed sheets of North Carolina for approval | Do. |
| Overhauling first and second proofs of photolithograph charts | Do. |
| Overhauling final proofs of charts printed from plates | Do. |
| Examining projections furnished to hydrographic parties | Do. |

*Miscellaneous draughting done during the fiscal year, etc.*—Continued.

| Description. | Draughtsmen. |
|---|---|
| Plotting aids to navigation on various charts | W. C. Willenbucher. |
| Corrections of numerous charts for file, Chart Room and Engraving Division | Do. |
| Correcting manuscript and reading proofs of monthly Notices to Mariners | Do. |
| Registering and arranging for file hydrographic records received | Do. |
| Keeping up hydrographic progress sketches | Do. |
| Furnishing information to Navy-Yard Site Commission (northwest coast) | Do. |
| Furnishing data for Light Lists, title and notes for new charts | Do. |
| Looking up deep-sea records: Pension claim cases, names of certain charts, tidal data, etc. | Do. |
| Furnishing statistics for Annual Report | Do. |
| Arranging index for Notices to Mariners (Nos. 1-109) | Do. |
| Progress sketch. Limits of hydrography and topography, Pacific coast | F. C. Donn. |
| Copying current curves and current stages, Gulf Stream | Do. |
| Aids to navigation and corrections, Wilmington and San Pedro Harbor and Chart 602 | Do. |
| Corrections to tidal reductions west coast of Florida | Do. |
| Examinations and additions to projections furnished to hydrographic parties | Do. |
| Limits of hydrography on projections | Do. |
| Examining records and verifying curve Gulf Stream currents | Do. |
| Locating reported rock ("Souza"), San Luis Obispo, Cal | Do. |
| Plotting bottle notices, coast of Florida, etc | Do. |
| Tracing curves, etc., entrance to New York | Do. |
| Looking up data for locating Beacon at entrance to Oakland, Cal | Do. |
| Arranging Index of Notices to Mariners | Do. |
| Looking up reported shoal near Cape Fermin | Do. |
| Tracing between shore and Tillamook Rock | Do. |
| Verifying shore-line, vicinity of San Juan Capistrano, California | Do. |
| Examining and verifying Bulkhead Channel, Florida Bay | Do. |
| Making three copies of section map | Do. |
| Numbering records, etc | Do. |
| Verifying hydrography, Nantucket Sound, Massachusetts | Do. |
| Correcting names, Port Orchard, Washington Territory | Do. |
| Miscellaneous work, drawings, and tracings | E. H. Wyvill. |

*REPORT OF THE COAST PILOT DIVISION, COAST AND GEODETIC SURVEY OFFICE, FOR THE FISCAL YEAR ENDING JUNE 30, 1889.*

U. S. COAST AND GEODETIC SURVEY OFFICE,
*Washington, D. C., July* 1, 1889.

SIR: I have the honor to submit the following report of the work of the Coast Pilot Division during the fiscal year ending June 30, 1889. Under the general direction of the Hydrographic Inspector the duties of this Division involve the execution of work both in the Office and in the field.

At the beginning of the year the new (third) edition of Subdivision 6-7 was in press, and on October 20 the volume was received by the Office for issue.

In the latter part of August the manuscript of Part IV, U. S. Coast Pilot, Atlantic Coast, was sent to the printer, and the first proofs of a portion of it were received from the printer October 10. From that date proofs were received at irregular intervals until May 2, 1889, when the last pages of proofs were approved for printing by this Division. An advance copy of Part IV has been received, views and maps inserted, and the time of issuing the edition now depends entirely on the printer.

The manuscript of Subdivision 22 was sent to the printer early in April, 1889, and a few pages of proofs were received from, and returned to, the printer previous to May 20. Since that date no proofs have been received by this Division. The manuscript of this Subdivision was ready for the printer in May, 1888, but owing to the delay in having matter printed, other manuscript of more importance was sent for publication.

It would seem that some arrangements should be made by which Coast Pilot manuscripts can be published with greater rapidity. The delay in publication of matter makes the work of proof-reading much greater, and necessitates changes in first proofs in order to bring the information up to date. Although Part IV contains only one hundred and fifty-six pages, and the manuscript was sent to the printer ten months ago, the volume is not yet issued. A slight delay in issuing this volume has been caused by the fact that the views to be inserted were not ready when the advance copy was received; that this was the fact was not due to this Division, but, I believe, to the state of Coast Survey funds.

It may be argued that the delay in the publication of Coast Pilot volumes is partly due to the fact that the proofs have sometimes been retained several days by this Division, but an examination of the records here certainly indicates that this was not the case, and that the delay was in no way caused by this Division.

The manuscript of a volume to cover Chesapeake Bay and Tributaries, and to be issued as Part VI, of the general volume of the U. S. Coast Pilot, is now virtually ready for publication, the only work still necessary being that required to bring the matter up to date, immediately before sending to the printer. The locality covered by Part VI is not covered by any Coast Pilot publication of this Office and it is desirable that the volume be issued as soon as possible.

Much matter treating of the coast of Maine, Massachusetts, Rhode Island, and Connecticut is in the Office, but much work will be required to put it in shape for publication according to the present scheme; that is, the issuing of parts which shall each form a portion of a large Coast Pilot volume covering the Atlantic coast of the United States.

Lieutenant G. H. Peters, U. S. N., was in charge of this Division until the date of his detachment, November 25, 1888; since that date I have been in charge of the work of the Division. From July 1, 1888, to October 4, 1888, and from May 4, 1889, to May 25, 1889, my time was mainly occupied with the work of the Hydrographic Division, of which I had charge during the temporary absence of Lieutenant M. L. Wood, U. S. N.

I have been ably assisted during the entire fiscal year by Mr. John Ross, who has been mainly engaged in revising and compiling manuscripts relating to the coast of Maine and to Chesapeake Bay and Tributaries, and who has also performed much of the routine Office work.

Ensign E. A. Anderson, U. S. N., rendered efficient service during his temporary attachment to the Division, from February 25 to April 17, 1889.

Miss G. B. Bower was employed as copyist in the Division from July 1 to September 15, 1888; Miss Julia Baird, from October 1 to December 31, 1888, and from March 7 to March 31, 1889; and Miss Alice F. Carlisle, from April 1 to July 1, 1889. The copying done by Miss Carlisle has been very satisfactory.

Very respectfully,

E. H. TILLMAN,
*Ensign U. S. N., Assistant Coast and Geodetic Survey,*
*Chief of Coast Pilot Division.*

Lieut. Commander W. H. BROWNSON, U. S. N.,
*Hydrographic Inspector, Coast and Geodetic Survey,*
*Washington, D. C.*

*List of Naval Officers attached to the Coast and Geodetic Survey during the fiscal year ending June 30, 1889.*

| Name. | Date attached. | Date detached. | Remarks. |
|---|---|---|---|
| LIEUTENANT-COMMANDERS. | | | |
| Chas. M. Thomas | Jan. 20, 1887 | | Still in service. |
| W. H. Brownson | *Aug. 11, 1881 | | Do. |
| H. E. Nichols | Nov., 1887 | | Do. |
| LIEUTENANTS. | | | |
| H. B. Mansfield | Mar. 15, 1888 | | Still in service. |
| J. E. Pillsbury | July 13, 1882 | | Do. |
| D. Delehanty | Mar. 20, 1889 | | Do. |
| J. F. Moser | Jan. 29, 1884 | | Do. |
| S. C. Paine | May 1, 1888 | Mar. 4, 1889 | |
| D. H. Mahan | Nov. 15, 1888 | | Do. |
| F. Winslow | Mar. 12, 1886 | Mar. 19, 1889 | |
| F. H. Crosby | Oct. 6, 1884 | Sept. 14, 1888 | |
| Wm. P. Elliott | Mar. 19, 1889 | | Do. |
| J. C. Burnett | Mar. 23, 1886 | Apr. 4, 1889 | |
| Geo. H. Peters | June 30, 1885 | Nov. 25, 1888 | |
| E. J. Dorn | Apr. 1, 1889 | | Do. |
| J. M. Helm | Sept. 4, 1888 | | Do. |
| M. L. Wood | Apr. 21, 1887 | | Do. |
| Geo. M. Stoney | May 16, 1888 | Oct. 15, 1888 | |
| LIEUTENANTS—JUNIOR GRADE. | | | |
| H. T. Mayo | May 7, 1886 | June 16, 1889 | |
| Chas. A. Gove | Apr. 9, 1888 | | Still in service. |
| J. N. Jordan | June 13, 1889 | | Do. |
| W. M. Constant | Mar. 19, 1888 | Nov. 3, 1888 | |
| J. H. Oliver | July 21, 1887 | Feb. 28, 1889 | |
| N. J. L. T. Halpine | May 2, 1887 | Nov. 22, 1888 | |
| A. N. Wood | Mar. 17, 1887 | | Do. |
| E. Lloyd, jr | Mar. 18, 1888 | Sept. 6, 1888 | |
| ENSIGNS. | | | |
| R. M. Hughes | Jan. 13, 1886 | | Still in service. |
| Harry Kimmell | Dec. 18, 1888 | | Do. |
| A. G. Rogers | Feb. 10, 1883 | Oct. 19, 1888 | |
| A. C. Almy | Sept. 16, 1887 | | Do. |
| L. M. Garrett | May 16, 1888 | | Do. |
| J. A. Bell | Feb. 22, 1885 | Aug. 20, 1888 | |
| E. H. Tillman | Dec. 28, 1886 | | Do. |
| R. O. Bitler | Apr. 29, 1885 | | Do. |
| J. C. Drake | Apr. 16, 1886 | | Do. |
| L. S. Van Duzer | July 10, 1888 | | Do. |
| Franklin Swift | Oct. 20, 1886 | | Do. |
| John F. Luby | Dec. 14, 1888 | | Do. |
| Spencer Wood | Mar. 17, 1888 | Oct. 26, 1888 | |
| G. W. Brown | July 13, 1888 | | Do. |
| W. R. M. Field | May 19, 1888 | Oct. 16, 1888 | |
| E. A. Anderson | Apr. 21, 1888 | | Do. |
| A. M. Beecher | Aug. 16, 1886 | | Do. |
| ENSIGNS—continued. | | | |
| F. K. Hill | Mar. 31, 1888 | | Still in service. |
| J. D. McDonald | Aug. 10, 1886 | | Do. |
| Walter O. Hulme | July 12, 1886 | July 9, 1888 | |
| G. R. Slocum | Aug. 7, 1887 | | Do. |
| J. P. McGuinness | Aug. 9, 1887 | | Do. |
| Jos. Strauss | July 16, 1887 | | Do. |
| C. S. Stanworth | July 15, 1887 | | Do. |
| R. L. Russel | July 25, 1887 | Apr. 22, 1889 | |
| H. A. Bispham | July 13, 1887 | | Do. |
| G. R. Evans | July 12, 1887 | | Do. |
| J. E. Shindel | July 13, 1887 | | Do. |
| D. S. Nes | Sept. 13, 1887 | Feb. 6, 1889 | |
| W. H. G. Dallard | July 8, 1888 | | Do. |
| P. Andrews | July 4, 1888 | | Do. |
| Wm. H. Faust | Aug. 1, 1888 | | Do. |
| W. L. Dodd | July 14, 1888 | | Do. |
| H. E. Rumsey | July 9, 1888 | Jan. 31, 1889 | |
| R. D. Tisdale | July 8, 1888 | | Do. |
| S. M. Stritc | July 11, 1888 | | Do. |
| F. W. Jenkins | Feb. 8, 1889 | | Do. |
| PASSED ASSISTANT SURGEONS. | | | |
| D. O. Lewis | Nov. 28, 1885 | Nov. 26, 1888 | |
| Robt. Whiting | Mar. 17, 1888 | Mar. 12, 1889 | |
| A. A. Austin | Sept. 22, 1885 | July 23, 1888 | |
| N. H. Drake | Dec. 26, 1888 | | Still in service. |
| John M. Steele | Mar. 30, 1888 | | Do. |
| C. W. Dean | Mar. 27, 1888 | | Died Oct. 22, 1888. |
| H. T. Percy | Mar. 12, 1889 | | Still in service. |
| ASSISTANT SURGEONS. | | | |
| T. A. Berryhill | Oct. 21, 1887 | Nov. 1, 1888 | |
| J. F. Uris | Nov. 5, 1888 | | Still in service. |
| Thos. Owens | July 23, 1888 | | Do. |
| PASSED ASSISTANT PAYMASTER. | | | |
| J. N. Speed | Dec. 20, 1886 | | Still in service. |
| PASSED ASSISTANT ENGINEERS. | | | |
| Geo. Cowie, jr | Jan. 1, 1885 | July 1, 1888 | |
| Geo. D. Strickland | Sept. 17, 1886 | | Still in service. |
| W. B. Dunning | Nov. 15, 1887 | Jan. 22, 1889 | |
| ASSISTANT ENGINEERS. | | | |
| Samuel H. Leonard, jr | Dec. 21, 1886 | June 30, 1889 | |
| W. W. White | Dec. 19, 1888 | | Still in service |
| J. C. Leonard | Jan. 21, 1889 | | Do. |
| CARPENTER. | | | |
| W. W. Richardson | Oct. 27, 1888 | | Still in service. |

* Re-attached January 29, 1885.

RECAPITULATION.

| | |
|---|---|
| Lieutenant-commanders | 3 |
| Lieutenants | 15 |
| Lieutenants (junior grade) | 8 |
| Ensigns | 37 |
| Passed assistant surgeons | 7 |
| Assistant surgeons | 3 |
| Passed assistant paymaster | 1 |
| Passed assistant engineers | 3 |
| Assistant engineers | 3 |
| Carpenter | 1 |
| | 81 |

NOTE.—From the statement immediately following it appears that of the eighty-one officers above named, fifty-four were on duty in the Survey at the close of the fiscal year.

*List of Naval Officers attached to the Coast and Geodetic Survey, June* 30, 1889.

COAST AND GEODETIC SURVEY OFFICE.

Lieut. Commander W. H. Brownson, Hydrodraphic Inspector.
Lieut. Commander Charles M. Thomas, Special Duty.
Lieut. Commander H. E. Nichols, Alaska Coast Pilot.
Lieut. M. L. Wood, Hydrographic Division.
Ensign E. H. Tillman, Coast Pilot Division.
Passed Assistant Paymaster J. N. Speel, in charge Naval Pay Accounts.

ATLANTIC AND GULF COASTS.

*Steamer Blake* (Atlantic Coast).—Lieut. J. E. Pillsbury, Commanding; Ensigns R. M. Hughes, C. S. Stanworth, P. Andrews, Harry Kimmell, and J. E. Shindel; Passed Assistant Surgeon Thomas Owens; Assistant Engineer W. W. White.

*Steamer Bache* (Atlantic Coast).—Lieut. J. F. Moser, Commanding; Ensigns Franklin Swift, R. D. Tisdale, H. A. Bispham, and S. M. Strite; Passed Assistant Surgeon John M. Steele.

*Schooner Eagre* (Atlantic Coast).—Lieut. William P. Elliott, Commanding; Ensigns L. S. Van Duzer and E. A. Anderson.

*Steamer Endeavor* (Gulf Coast).—Ensign L. M. Garrett, Commanding; Ensigns John F. Luby, and G. R. Evans.

*Schooner Scoresby* (Atlantic Coast).—Ensign J. C. Drake, Commanding.

*Schooner Matchless* (Atlantic Coast).—Carpenter W. W. Richardson, in charge.

PACIFIC COAST.

*Steamer Patterson* (Coast of Alaska).—Lieut. H. B. Mansfield, Commanding; Lieuts. E. J. Dorn and A. N. Wood; Ensigns A. C. Almy, J. D. McDonald, William H. Faust, A. M. Beecher, and G. R. Slocum; Passed Assistant Surgeon H. T. Percy; Passed Assistant Engineer George D. Strickland.

*Steamer Hassler* (Coast of California).—Lieut. D. Delehanty, Commanding; Lieut. Charles A. Gove; Ensigns J. P. McGuinness, G. W. Brown, and W. L. Dodd; Passed Assistant Surgeon N. H. Drake.

*Steamer Gedney* (Coast of Oregon).—Lieut. J. M. Helm, Commanding; Ensigns R. O. Bitler, W. H. G. Bullard, Jos. Strauss, and F. W. Jenkins; Assistant Surgeon J. F. Urie.

*Steamer McArthur* (Coast of California).—Lieut. D. H. Mahan, Commanding; Assistant Engineer J. C. Leonard.

*Schooner Earnest* (Coast of Washington).—Lieut. J. N. Jordan, Commanding; Ensign F. H. Hill.

*Number of Naval Officers attached to the Coast and Geodetic Survey vessels ana to the Office of the Survey during the fiscal year ending June* 30, 1889.

| Name of vessel. | Dec. 31, 1888. | June 30, 1889. | Name of vessel. | Dec. 31, 1888. | June 30, 1889. |
|---|---|---|---|---|---|
| Steamer Bache | 8 | 6 | Schooner Matchless | 1 | 1 |
| Steamer Blake | 8 | 8 | Steamer McArthur | 4 | 2 |
| Schooner Eagre | 3 | 3 | Steamer Patterson | 8 | 10 |
| Schooner Earnest | 1 | 2 | Schooner Scoresby | 3 | 1 |
| Steamer Endeavor | 3 | 3 | Coast Survey Office | 5 | 6 |
| Steamer Gedney | 6 | 6 | | | |
| Steamer Hassler | 8 | 6 | Total | 58 | 54 |

Average number, 56.

*Number of men attached to the Coast and Geodetic Survey vessels during the fiscal year ending June 30, 1889.*

| Name of vessel. | Sept. 30, 1888. | Dec. 31, 1888. | Mar. 31, 1889. | June 30, 1889. |
|---|---|---|---|---|
| Steamer Arago | 2 | 2 | 2 | 2 |
| Steamer Bache | 37 | 38 | 37 | 37 |
| Steamer Blake | 37 | 39 | 39 | 38 |
| Barge Beauty | 1 | 1 | 1 | 1 |
| Steamer Daisy | 13 | 6 | 5 | 14 |
| Schooner Drift | 1 | 1 | 1 | 1 |
| Schooner Eagre | 23 | 17 | 18 | 23 |
| Schooner Earnest | 16 | 8 | 9 | 16 |
| Steamer Endeavor | 15 | 25 | 24 | 25 |
| Steamer Gedney | 27 | 29 | 29 | 29 |
| Steamer Hassler | 28 | 33 | 33 | 34 |
| Steamer Hitchcock | 3 | 2 | 2 | 2 |
| Schooner Matchless | 1 | 1 | 1 | 1 |
| Steamer McArthur | 28 | 24 | 23 | 24 |
| Steamer Patterson | 44 | 40 | 44 | 44 |
| Schooner Palinurus | 1 | 1 | 1 | 1 |
| Schooner Quick | 1 | 1 | ..... | 1 |
| Schooner Ready | 1 | 5 | 8 | 1 |
| Schooner Scoresby | 15 | 16 | 14 | 15 |
| Schooner Spy | 3 | 3 | 9 | 1 |
| Schooner Transit | ..... | 5 | 4 | ..... |
| Schooner Yukon | ..... | 1 | 1 | 1 |
| Launch No. 4 | ..... | ..... | 1 | 1 |
| Total | 297 | 298 | 306 | 312 |

Average number of men, 303.

*Names of vessels, their tonnage, etc., in the service of the Coast and Geodetic Survey during the fiscal year ending June 30, 1889.*

| No. | Name of vessel. | Tonnage. | Complement of— | |
|---|---|---|---|---|
| | | | Officers. | Men. |
| 1 | Steamer Patterson | 453 | 12 | 44 |
| 2 | Steamer Hassler | 243 | 10 | 34 |
| 3 | Steamer Blake | 218 | 10 | 37 |
| 4 | Steamer Bache | 186 | 10 | 37 |
| 5 | Steamer Gedney | 133 | 8 | 26 |
| 6 | Steamer McArthur | 112 | 7 | 29 |
| 7 | Steamer Endeavor | 105 | 7 | 24 |
| 8 | Steamer Hitchcock | 83 | 5 | 14 |
| 9 | Steamer Cosmos | 25 | 3 | 6 |
| 10 | Steamer Arago | 38 | 5 | 2 |
| 11 | Steamer Daisy | 44 | 3 | 14 |
| 1 | Schooner Eagre | 202 | 6 | 22 |
| 2 | Schooner Drift | 87 | 5 | 14 |
| 3 | Schooner Earnest | 80 | 5 | 16 |
| 4 | Schooner Ready | 80 | 5 | 14 |
| 5 | Schooner Yukon | 78 | 6 | 14 |
| 6 | Schooner Palinurus | 76 | 5 | 14 |
| 7 | Schooner Scoresby | 72 | 5 | 16 |
| 8 | Schooner Matchless | ..... | 5 | 14 |
| 9 | Schooner Quick | 38 | 4 | 12 |
| 10 | Schooner Transit | 43 | 3 | 8 |
| 11 | Schooner Spy | 35 | 3 | 8 |
| 1 | Barge Beauty | 28 | ..... | 1 |

RECAPITULATION.

| | |
|---|---|
| Whole number of vessels: | |
| Steamers | 11 |
| Schooners | 11 |
| Barge | 1 |
| | 23 |
| Number of vessels in active service | 18 |
| Average number of naval officers for the year | 56 |
| Average number of men for the year | 303 |

The complements above given do not represent the actual number of officers or men in the Survey during the year owing to the fact that some vessels were employed only a part of the time.

Blank page retained for pagination

# APPENDIX NO. 6.—1889.

## THE RELATION BETWEEN THE METRIC STANDARDS OF LENGTH OF THE U. S. COAST AND GEODETIC SURVEY AND THE U. S. LAKE SURVEY.

A report by C. A. SCHOTT and O. H. TITTMANN,
Assistants, Coast and Geodetic Survey.

INTRODUCTION.—Considering that the results herein discussed, which refer mainly to the relative and absolute lengths of two primary standards, are of great importance to both the Coast and Geodetic Survey and to the Office of Weights and Measures, it has been deemed best to present them in a joint report. Results are given also for the length of a secondary standard used in gravity research.

U. S. COAST AND GEODETIC SURVEY OFFICE,
*Washington, D. C., June* 15, 1889.

The Committee metre has served as the standard to which have been referred all metric length-measures supplied to the several States of the Union, under the act of Congress of July, 1866, and in general as the metric standard for the Office of Weights and Measures in its verification of length-measures submitted to it by manufacturing establishments, engineers, scientific men, and educational institutions.

Furthermore, it is well known that all results of the Coast and Geodetic Survey relating to length are expressed in terms of the Committee metre, and that certain metric lengths given by the Lake Survey are expressed in terms of the Repsold metre of 1876; also that special use has been made by the Coast and Geodetic Survey of the Berlin metre No. 49 in observations for the intensity of gravity at various places at home and abroad. The Committee metre* is one of the original iron bars used to derive the metre from the Toise du Pérou, and it belongs to the American Philosophical Society, but it has been in the custody of the Coast and Geodetic Survey since its first organization. The Repsold metre † was acquired by the Lake Survey in connection with a base apparatus by the same artist; it was kindly loaned by the Chief of Engineers, U. S. A., to the Office of Weights and Measures for the purpose of comparison with other standards. The Berlin metre No. 49‡ was obtained from the Eichungs Amt, or the German Office of Standard Measures at Berlin, by Assistant C. S. Peirce in 1876, and has been used by him in connection with his researches for the length of the seconds pendulum.

The Committee metre is an end metre; the other two are line metres.

The immediate occasion for bringing out and presenting our results was the necessity of expressing the length of the Olney (Illinois) primary base-line, measured by the Lake Survey, July-

* For particulars, descriptive and historical, the reader may consult Transactions American Philosophical Society at Philadelphia, vol. II, 1825, Communication by F. R. Hassler, March 3, 1820; also Comparisons of Weights and Measures by F. R. Hassler, Washington, 1832; also U. S. Coast Survey Report for 1867, Appendix No. 7.

† This metre is fully described, and its length and co-efficient of expansion is referred to in "Professional Papers, Corps of Engineers, U. S. A., No. 24, Primary Triangulation of the U. S. Lake Survey, Lieut. Col. C. B. Comstock, Washington, 1882;" see also supplement, Appendix V, Value of Metre, R. 1876, Feb. 28, 1885, same author.

‡ This bar was acquired by Assistant C. S. Peirce while engaged in pendulum researches at Berlin, Germany, April, May, and June, 1876. For information see Coast Survey Report for 1876, Appendix No. 15, pp. 280-313.

September, 1879, in terms of the Committee metre. This base, together with its geodetic connection with the main triangulation south of Chicago, falls within the belt of the transcontinental triangulation passing across Illinois, and was consequently incorporated with it. The connection made in the field in 1883 and 1884 between the two independent triangulations, and the adjustment of the base figure involving thirty-two equations of condition, enabled us to make full use of the previous labors of the Lake Survey, which in respect to accuracy leave nothing to be desired.

There are other points of contact of the two Government surveys, as, for instance, in the State of New York, at the eastern end of Lake Ontario, and near the Illinois and Wisconsin boundary, near Lake Michigan; these geodetic connections can only be fully utilized when the results of both surveys are based on uniform standard data.

In this report we shall designate, for the sake of brevity, the Committee metre by C. M. (for which formerly the symbol Mc was frequently used); the Repsold metre by R. M. (which in other publications appears also under the forms R., 1876, and U. S. (Repsold); and the Berlin metre No. 49 by B. M.

(2) COMPARISON OF THE REPSOLD METRE OF 1876 (R. M.), U. S. LAKE SURVEY, AND THE COMMITTEE METRE (C. M.), U. S. COAST AND GEODETIC SURVEY.

For the comparison of these standards the best means at present available is the beam-compass comparator of the Weights and Measures Office, designed by Assistant H. W. Blair, and constructed in 1882 by Fauth & Co., of Washington. Since this instrument has not yet been described, the following short account of it may here prove acceptable.

*Description of the Optical Beam-Compass Comparator.*

This comparator was designed for comparing any two line-measures from a decimetre to a metre in length, and for comparing end-yards or metres with line-yards or metres respectively, according to Airy's method.*

The principle of its construction and use is to move a beam carrying the microscope from one length-measure, supported horizontally underneath, over the other one to be compared with it.

The ends of the beam are brought up against adjustable stops at each end of the apparatus when pointing on one bar; the beam is then slid on its supports transversely until it abuts against the opposite stops, which define its position over the other one. The beam can also be brought to any position intermediate between these stops.

At each end the beam is grasped by a lever-arm. These arms are connected by a rod, which is moved by a handle underneath the apparatus, and thus the beam is moved to and fro upon its supports.

At each end the beam is fixed to a transverse bar of metal, 3 inches long, forming part of the beam, and moving with it upon the fixed supports, which are fastened to the bed-plate of the comparator. Each transverse bar rests upon two heels, each about $\frac{3}{4}$ of an inch long.

On the left-hand end of the beam one heel has a flat surface; the other an angle-shaped groove to guide the beam and prevent its longitudinal displacement as it slides on a correspondingly shaped rail on the fixed supports. The heels on the right-hand end of the beam have flat bottoms, so that when the beam is moved it may adjust itself to unequal stress without sensible twist.

The fixed supports are fastened to an iron bed-plate, which rests on a stand. Rollers are provided with vertical adjustment, passing through the bed-plate from below. On these the bars to be compared rest, and can be readily raised or lowered to suit the requirements of the focal plane of the microscopes.

This description will be readily understood by reference to the drawing (illustration No. 19).

*Micrometers.*

The micrometers belonging to this apparatus are marked A and B (though not so lettered on the illustration), and were constructed with the greatest care. They were minutely studied by the

* Philosophical Trans. of the Royal Society, London, Vol. 147, Part III, page 685.

U. S. COAST AND GEODETIC SURVEY

T. C. MENDENHALL, Superintendent

1890

U. S. OFFICE OF WEIGHTS AND MEASURES

J. E. HILGARD, Superintendent

1893

# OPTICAL BEAM COMPASS COMPARATOR

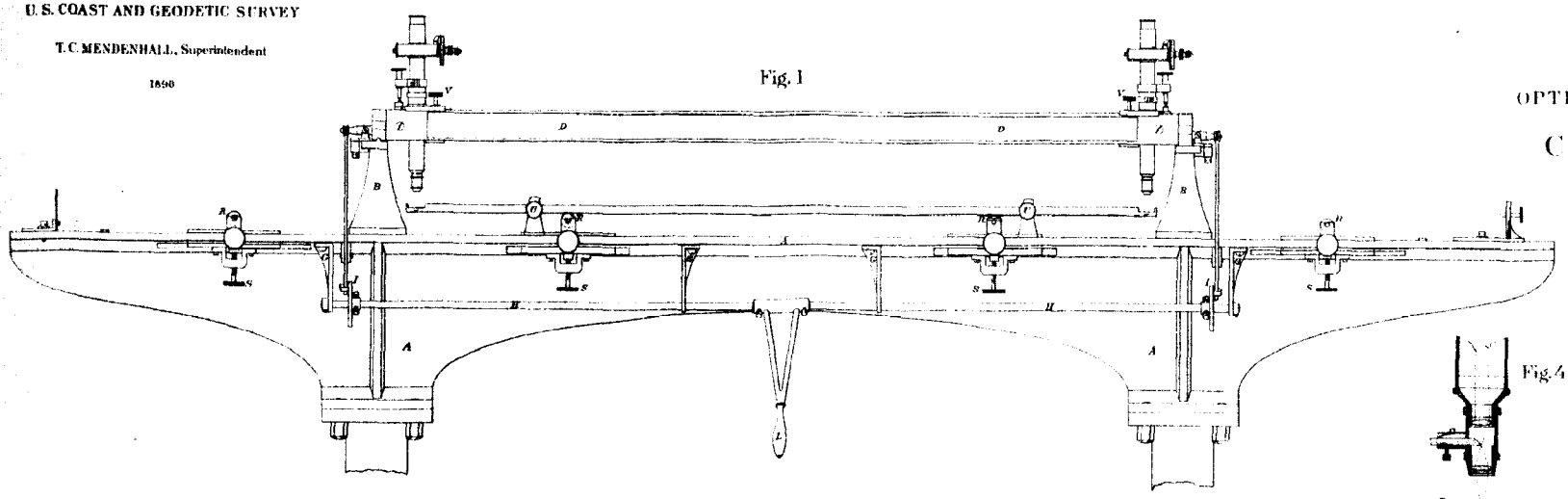

Fig. 1

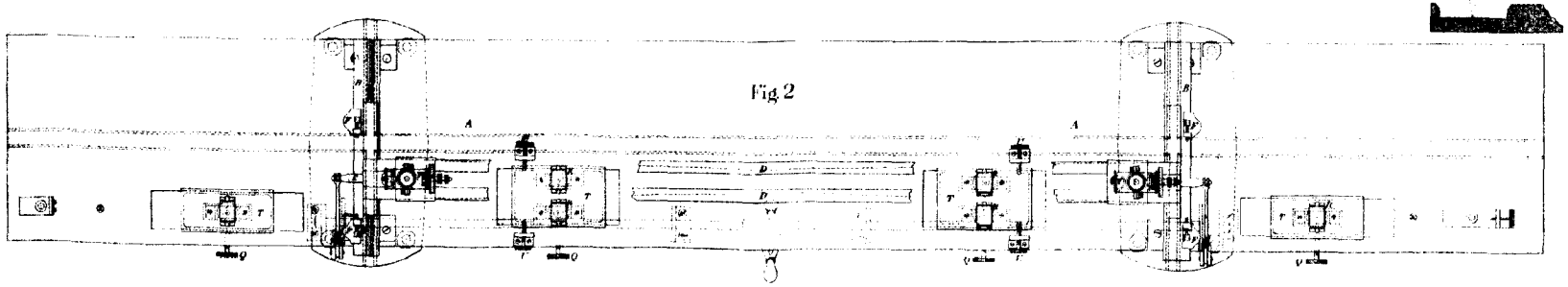

Fig. 2

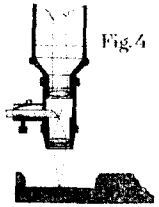

Fig. 4

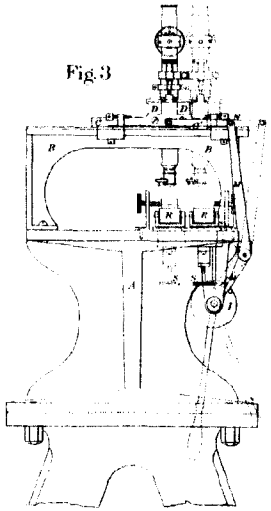

Fig. 3

late Assistant H. W. Blair, who found that, as compared with a strictly uniform screw for the limits observed, the maximum deviation of these screws is $\frac{1}{60000}$ of an inch in fifteen turns, and this maximum is reached by a curve so perfectly regular that the use of corrections derived from a graphic projection of the curve does not involve an error so great as $\frac{1}{600000}$ of an inch. Assistant Blair states that the total magnifying powers are between 50 and 60 diameters.

*Micrometer Values.*

The linear values of one revolution of the micrometer-screws were carefully determined by measuring each half millimetre of the Brunner centimetre scale* as well as by measures of the scale of R. M. while the comparisons were in progress.

The values used in the reduction were—

| | Micrometer A. | Micrometer B. |
|---|---|---|
| 1888: August and September, | 1 Rev. = 33.339† $\mu$ | 1 Rev. = 33.874 $\mu$ at 24°.7 C. |
| 1888 and 1889: December and January, | 1 Rev. = 33.310 | 1 Rev. = 33.720 at 12°.0 C. |

During the observations made at the cold-storage rooms‡ the spider-threads, owing to condensation of moisture upon them, became slack, and the micrometers were taken apart so that new threads could be put in.

A re-determination of the micrometer values was deemed necessary, and gave the following results, which were used in the reduction of the observations made there.

| | Micrometer A. | Micrometer B. |
|---|---|---|
| 1889: February and March, | 1 Rev. = 33.33 $\mu$ | 1 Rev. = 33.79 $\mu$ at — 1°.2 C. |

A few observations were made with two auxiliary microscopes, Nos. 2 and 3. The values of their micrometers were carefully determined in April, 1888, by means of the Brunner centimetre scale, at a temperature of about 20° C., giving for—

| No. 2. | No. 3. |
|---|---|
| 1 Rev. = 31.01 $\mu$ | 1 Rev. = 31.14 $\mu$ |

A single determination, using the scale of R. M., was made at the low temperature of the cold-storage rooms, giving nearly identical values for each one.

| No. 2. | No. 3. |
|---|---|
| 1 Rev. = 31.01 $\mu$ | 1 Rev. = 31.15 $\mu$ |

The earlier values were therefore retained.

*Illumination.*

Illumination was secured by means of Tolles prisms inserted between the systems of lenses of the objective.

In the Survey Office, room No. 6, the prisms were illuminated by two coal-oil lamps set between the double windows of the room.

In the standards room of the Butler Building adjoining the Survey Office, no artificial light was used. The light from the sky coming in through a window was sufficient.

In the cold-storage rooms, most of the observations were made by natural illumination, but for a time the light of 3 candle-power electric glow lamps, concentrated by lenses on the prisms, was used. The natural illumination was, however, by far the most satisfactory. In the observations made with micrometers Nos. 2 and 3 concave reflectors below the objectives were used, but proved unsatisfactory.

* Brought from Paris by Assistant J. E. Hilgard in 1874, and compared with C. M. by Assistant C. A. Schott, in November, 1880.

† One $\mu$ = one millionth of a metre.

‡ Over the Washington Centre Market, and specially referred to further on.

*Thermometers.*

Four Tonnelot centigrade thermometers (verre dur) Nos. 4331, 4332, 4334, and 4335, being four out of the six which are intended to accompany the National Prototype metres as auxiliary standards, were used to determine the temperature. They were carefully studied at the International Bureau of Weights and Measures near Paris, and they are accompanied by elaborate tables, giving their corrections.

During the last set of observations the temperature of the room was at times below the range of the Tonnelot thermometers, and, therefore, two Kew Fahrenheit thermometers, Nos. 967 and 968, were substituted for two of the Tonnelot. The depressed zero (32° F.) points of all the thermometers were determined several times during the observations.

The thermometers were laid on the bars with their bulbs in contact with the latter, the bulbs being covered with light metallic shields not in contact with them.

The indications of the Tonnelot thermometers given in the abstract have been corrected for external and internal pressure, for calibration, scale value, and zero point, and in the final equations they have been reduced to the standard Hydrogen scale by the general formula established by the International Bureau.

The thermometers were read immediately upon entering the comparing-room, and no sensible change was noticeable during the brief period occupied by a comparison.

The apparatus was covered by a glass case through which the micrometer microscopes projected.

COMPARISON OF LINE AND END METRES.—SPECIAL DEVICE USED WITH C. M.

To make C. M., which is an end measure, comparable with R. M., which is a line measure, the following device was used:

A fine spider-thread was stretched over each end face of C. M., and these and their reflections from the end surfaces, with which they were in contact, or nearly in contact, were viewed through the microscopes. Each spider-thread and its reflection appeared as two dark lines, with a narrow light space between them wherever the thread was not in contact with the bar. The light space varied in width from $0\mu$ to $10\mu$. Wherever an irregularity exists in the end surface of the bar the reflection is no longer symmetrical with the thread.

As the ends of the C. M. in its axis appear less perfect than the rest of the end surfaces, Assistant Tittmann decided to make the comparisons on each side of the axis, and for this purpose he used a special device.

Two small plates were made, each exactly half as thick as C. M., each one carrying a guide-arm, which is in contact with the edge of C. M. when in position.

Each plate carries three pointers, and when arranged for observation the corresponding pointers on opposite ends of the bar define three diameters of the bar, 2½ millimetres apart, parallel to each other, and lying in the horizontal plane passing through the axis of C. M., the middle pointers lying in the prolongation of the axis of the bar very nearly, as shown in the accompanying sketch.

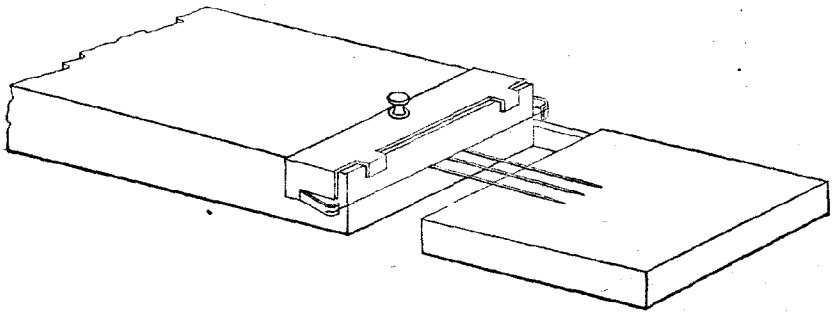

The field of view of the microscopes permits one to see a section of the end plane of the bar about half a millimetre long, and this, in view of the visible irregularities of the surfaces, appeared preferable to observing merely a microscopic point, as was done in the Breteuil comparisons between line and end measures.

Most of the observations were made on the three diameters spoken of.

In view of the irregularities existing at the terminal surfaces of the axial diameter of C. M., and of the uncertainties of comparisons with this apparatus when the beam carrying the microscopes is not against the stops (see General Adjustments), the final results are referred to the two diameters, I and III. See illustration herewith.

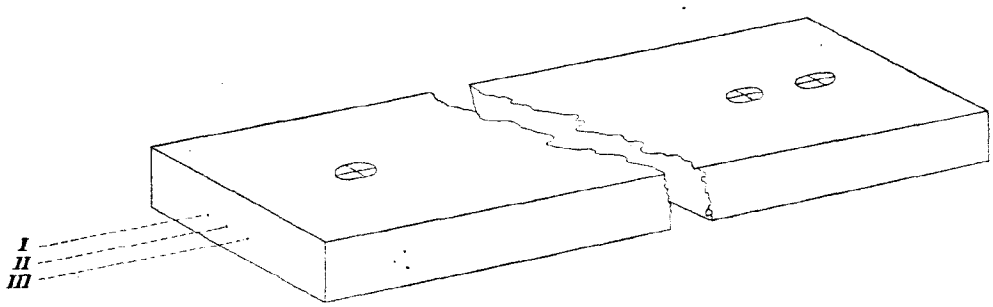


It is known that comparisons have at various times been made by means of the Saxton pyrometer and the Bessel level-comparator to test the parallelism of the end faces of C. M. without detecting any deviation.

*Places of Observation.*

The first comparisons were made in basement room 6, of the Coast and Geodetic Survey Office, at the natural temperature of the room, about 22°.7 C. The room was then artificially heated by lighting the gas-burners in the room, and a set was made at the artificial temperature of 29°.6 C.

The comparator was then taken to the standards room of the Butler Building, adjoining this office, and two sets of comparisons were made, one in December, 1888, and one in January, 1889, at an average temperature of 12°.2 C.

Finally the comparator was removed to the cold-storage rooms over the Centre Market, and two sets were obtained in February and March, 1889, one at an average temperature of — 0°.4 C., and the other at — 3°.95 C.

*General Adjustments.*

Before beginning the observations the microscopes were made vertical by means of an attached level. They were focused on the surface of mercury put in a long trough beneath them, and the bars were adjusted to the horizontal focal plane thus established.

In order to eliminate the effect of possible changes in the position of the microscopes relative to each other, when the beam is shifted from one set of stops to the other, it is essential that the bars should be transposed in such a way that one bar shall occupy the place previously occupied by the other, thus exchanging front for rear bar. The effect of shifting the beam from one set of stops to the other can be shown by comparing a bar with itself by shifting it with the microscopes.

Experiments made for this purpose show that this effect is very slight, and that it is eliminated by transposing the bar from front to rear.

When comparisons are made at points intermediate between the stops we can not feel sure that the microscopes have not changed their relative positions, nor that the effect can be eliminated. Therefore in the reductions, only those measures were used when the beam was against the stops.

The bars were frequently transposed and turned end for end.

The Committee metre was also turned upside down, and whenever that was done it was necessary to take off the caps carrying the spider-threads, which were renewed several times, owing to breakage. The conditions were, therefore, varied as much as possible.

The bars were protected by a glass case covering the apparatus, and were supported on two rollers, whose distance apart was determined by Airy's formula.*

When pointing on the line metre, the image seen in the microscope is formed by the whole objective (leaving out of account the part cut off by the Tolles prism); when, however, on C. M., the image was formed by one-half the objective only.

By transposing the microscopes, the opposite halves of the objectives were brought into use; but it does not follow that a constant error which might be due to the cause just pointed out would be eliminated by their transposition.

Experiments were, therefore, made in the following manner on a fine line traced on a bar fixed under the microscopes:

The line was viewed with one-half of the objective covered, and the micrometer was read.

The cover was then removed and pointings were again made, the whole objective being uncovered; then the other half was covered and readings were again taken. This process was then repeated in the inverse order.

This was done with both microscopes a number of times, but no measurable effect could be discovered.

The comparisons and observations were all made by Assistant Tittmann.

An abstract of the record of the comparisons between C. M. and R. M., and between R. M. and B. M., is appended to this report.

*Discussion of Results.*

The comparisons gave the following observed differences between R. M. and C. M.:

| Set. | Date. | Temperature of bars. | R. M. — C. M. | Weight. |
|---|---|---|---|---|
| | | ° | μ μ | |
| 1 | 1889, March 9, 11, 12, 13, 14, 15, | — 3.95 C. | +103.5 ± 0.5 | 5 |
| 2 | 1889, February 24, 25, 27, 28, | — 0.40 | 100.0 0.7 | 2 |
| 3 | 1888, December 11, 12, 13, 14, 15, | +12.23 | 82.0 0.4 | 8 |
| 4 | 1888, August 30, 31, September 5, 6, | +22.61 | 72.7 0.5 | 4 |
| 5 | 1888, September 8, 10, 11, 12, 13, | +29.60 | 63.3 0.6 | 3 |

Let $x$ = excess of length of R. M. over C. M. at temperature $t_0$,

$y$ = differential coefficient of expansion of R. M. over C. M.,

$l_1\ l_2\ l_3$..... observed difference R. M. — C. M.,

$t_1\ t_2\ t_3$..... temperatures corresponding to these differences, and

$p_1\ p_2\ p_3$..... the relative weights;

then we may adopt conditional equations to be either of the form $x + (t - t_0)\ y = l$, or of the form $x + (t - t_0)\ y + (t - t_0)^2 z = l$, whichever may best suit the preceding observations.

*Memoirs Astronomical Society, Vol. XV., p. 157; London, 1846.

Putting $t_0 = \frac{[p\,t]}{[p]}$ the normal equations reduce to their most simple form, viz: in the first case to

$$\begin{cases} [p]\,x = [pl] \\ [p(t-t_0)^2]y = [(t-t_0)pl]. \end{cases}$$

We have the observation equations for $t_0 = +11.661$, as follows:

| First supposition. | $p$ |
|---|---|
| $x-15.611\,y-103.5=v_1$ | 5 |
| $x-12.061\,y-100.0=v_2$ | 2 |
| $x+\ 0.569\,y-\ 82.0=v_3$ | 8 |
| $x+10.949\,y-\ 72.7=v_4$ | 4 |
| $x+17.939\,y-\ 63.3=v_5$ | 3 |

Normal equations,

$$\begin{cases} 22x = +1854.2 \\ 2956.91\,y = -3526.2 \end{cases}$$

$$\begin{cases} x = +84.28 \\ y = -\ 1.19253 \end{cases}$$

$$v_1 = -0.76^{\mu}$$
$$v_2 = -1.46$$
$$v_3 = +1.61$$
$$v_4 = -1.37$$
$$v_5 = -0.23$$

And mean errors,

$$m = \sqrt{\frac{[pvv]}{n-n_1}} = \pm 3.44^{\mu}$$

$$m_x = \frac{3.44}{\sqrt{22}} = \pm 0.73$$

$$m_y = \frac{3.44}{\sqrt{2957}} = \pm 0.063$$

| Second supposition. | $p$ |
|---|---|
| $x-15.611\,y+243.69\,z-103.5=v_1$ | 5 |
| $x-12.061\,y+145.46\,z-100.0=v_2$ | 2 |
| $x+\ 0.569\,y+\ \ 0.32\,z-\ 82.0=v_3$ | 8 |
| $x+10.949\,y+119.89\,z-\ 72.7=v_4$ | 4 |
| $x+17.939\,y+321.82\,z-\ 63.6=v_5$ | 3 |

Normal equations.

$$\begin{cases} 22\,x + 2956.9\,z = +\ 1854.2 \\ +2956.9\,y + 41.5\,z = -\ 3527 \\ 2956.9\,x + 41.5\,y + 707440.9\,z = +251389 \end{cases}$$

$$\begin{cases} x = +\ 83.317 \\ y = -\ 1.19290 \\ z = +\ 0.007179 \end{cases}$$

$$v_1 = +0.19^{\mu}$$
$$v_2 = -1.25$$
$$v_3 = +0.64$$
$$v_4 = -1.58$$
$$v_5 = +0.93$$

Mean errors,

$$m = \pm\sqrt{\frac{[pvv]}{n-n_1}} = \pm 3.10^{\mu}$$

$$m_x = 3.10\sqrt{0.1037} = \pm 1.00$$

$$m_y = 3.10\sqrt{.0003382} = \pm 0.057$$

$$m_z = 3.10\sqrt{.000003226} = \pm 0.0056$$

Hence the expressions and their probable errors:

$$\text{R. M.}-\text{C. M.} = +84.28^{\mu} - 1.1925^{\mu}\,(t-11^{\circ}.66) \quad \ldots\ldots \quad (1)$$
$$\pm\ .49 \pm\ 425$$

$$\text{R. M.}-\text{C. M.} = +83.32 - 1.1929\,(t-11^{\circ}.66) + 0.00718^{\mu}\,(t-11.66)^2 \quad \ldots\ldots \quad (2)$$
$$\pm\ .67 \pm\ 384 \qquad \pm\ 375$$

We give the preference to the first of these expressions, as the relatively large coefficient of the square term would indicate an insufficient number of normal values of comparison.

For zero temperature we have (1) R. M.—C. M $= +98.19^{\mu} \pm 0.70^{\mu}$
(2) R. M.—C. M $= +98.21 \pm 0.95$

The first equation being preferred, we arrive at the result that the Repsold metre at zero temperature is 98.19 microns longer than the Committee metre at the same temperature, with a probable error in length of $\pm 0.70$ micron.

### (3) COMPARISON OF THE COEFFICIENTS OF EXPANSION OF THE IRON COMMITTEE METRE (C. M.) AND OF THE REPSOLD STEEL METRE (R. M.).

We shall designate the coefficient of expansion of the Committee metre for the centigrade scale by $\alpha_{\text{C. M.}}$, and similarly the coefficient for the Repsold metre by $\alpha_{\text{R. M.}}$.

The French Committee in the last century determined for its iron metres $\alpha = 11.56 \times 10^{-6}$, a value which was used on the Survey until the first direct determination made by C. A. Schott, assisted by H. W. Blair, December, 1880—February, 1881, became available. These observations were made at the Survey Office in connection with the standarding of two new five-metre bars, and the method will be found described in Appendix No. 7, Coast and Geodetic Survey Report for 1882. The value found, viz:

$\alpha_{C.M.} = 11.790 \times 10^{-6}$ is given on page 124 of that Report; it answers for a range between
$\pm\ 25$
4° and 38° C.

The coefficient of expansion of the Repsold metre was first given by Foerster* in 1879 as $10.31 \times 10^{-6}$ for 1° C., but this value depended on the rate of expansion of a platinum bar for which Borda's erroneous coefficient had been assumed. Additional data enabled Dr. Foerster to deduce the value $10.654 \times 10^{-6}$.

The values determined by the Lake Survey in 1879–'80, and derived from comparisons with Clarke yard A, and through the expansion of a brass bar, gave respectively 10.59 and 10.64; hence the mean $10.615 \times 10^{-6}$ for 1° C.

Elaborate observations made at the International Bureau of Weights and Measures† in January, 1883, resulted in the value $\alpha_{R.M.} = 10.563 \times 10^{-6}$ for mercurial scale, and applicable between the
$\pm\ 11$
range 0 to 36° C.

By reverting to the form $\alpha + \beta t$ for the coefficient of expansion, and putting $\beta = 6 \times 10^{-9}$ as found for steel by Dr. Benoit of the International Bureau, Assistant Tittmann finds that the above value expressed in terms of the hydrogen scale of temperature becomes $\alpha_{R.M.} = 10^{-6}(10.535 + 0.00500\,t)$ for a range of 0° to 30°; hence for middle temperature 15° the value $\alpha_{R.M.} = 10.610 \times 10^{-6}$, which may be regarded as the best value deducible from the observations.

We have already given the difference of expansion of these metres resulting from the Washington observations of 1888–'89, viz: $\Delta\alpha_{R.M.-C.M.} = -1.193 \times 10^{-6}$, hence the following comparison:
$\pm\ 40$

$\alpha_{R.M.} = 10.610 \times 10^{-6}$, from observations at Paris, 1883.
$\pm\ 11$

$\alpha_{C.M.} = 11.790 \times 10^{-6}$, from observations at Washington, 1880–'81.
$\pm\ 25$

Hence $\Delta_{R.M.-C.M.} = -\ 1.180 \times 10^{-6}$.
$\pm\ 28$

and $\Delta_{R.M.-C.M.} = -\ 1.193 \times 10^{-6}$, from observations at Washington, 1888–'89.
$\pm\ 40$

The difference between the direct and the indirect results is but $0.013 \pm 0.049$, which must be regarded as an excellent accord, especially when we consider the different means employed by the several observers. For equal weights we distribute the difference, and assigning to each value one-third of it we have, finally—

$$\alpha_{R.M.} = +10.606 \times 10^{-6}$$
$$\alpha_{C.M.} = +11.795 \times 10^{-6}$$

with an estimated probable error of the factors of $\pm\ 0.025$

(4) COMPARISON OF REPSOLD METRE OF 1876 (R. M.) WITH BERLIN METRE, NO. 49 (B. M.)

These comparisons were made by the same apparatus used for the comparisons of C. M. and R. M., and during the same period of time, so that what has been stated in the previous pages in regard to place of observation, adjustment of apparatus, thermometers, and micrometer values applies also to these comparisons.

* Letter dated Berlin, August 10, 1881; see Appendix I, Professional Papers, Corps of Engineers, U. S. A., No. 24, pp. 847–851.

† Extract from Travaux et Mémoires, Bureau International des Poids et Mesures, Tome III, Paris, 1884.

*Recapitulation of Resulting Normal Differences R. M. — B. M.*

| Set. | Date. | Temperature of bars. | R. M. — B. M. | Weight. |
|---|---|---|---|---|
| | | ° | μ | |
| 1 | 1889, March 6, 7, 8, | + 0.39 C. | + 109.0 ± 0.5 | 3 |
| 2 | 1889, January 11, 12, 14, 15, | 13.06 | + 5.4 ± 0.4 | 3 |
| 3 | 1888, October 4, | 16.66 | − 22.8 ± 0.7 | 1 |
| 4 | 1888, September 15, 18, 19, | 30.11 | − 134.4 ± 0.4 | 3 |

Then for the conditional equations of the form $x + (t - t_0)\,y = l$, we find the normal equations:

$$\begin{cases} 10\,x = -\ 82.8, \\ 1338.6\,y = -\ 10961.1, \end{cases} \quad \text{hence} \quad \begin{cases} x = -\ 8.28 \\ y = -\ 8.1885 \end{cases}$$

Where $t_0 = \frac{[p\,t]}{[p]} = +\ 14^\circ.734$, and $\text{R. M.} - \text{B. M.} = \underset{\pm 0.17}{-\ \overset{\mu}{8}.28} - \underset{\pm\ 182}{\overset{\mu}{8}.1885}\ (t - 14^\circ.734)$.

$$\text{Also} \quad \begin{cases} v_1 = +\ \overset{\mu}{0}.14 \\ v_2 = +\ 0.03 \\ v_3 = -\ 1.24 \\ v_4 = +\ 0.22 \end{cases} \quad \text{and} \quad \begin{cases} m = \pm\ \overset{\mu}{1}.0 \\ m_x = \pm\ 0.25 \\ m_y = \pm\ 0.027 \end{cases} \quad \text{hence} \quad \begin{aligned} r &= \pm\ \overset{\mu}{0}.66 \\ r_x &= \pm\ 0.17 \\ r_y &= \pm\ 0.0182 \end{aligned}$$

For zero temperature we have R. M. — B. M. $= +\ \overset{\mu}{112}.37 \pm \overset{\mu}{0}.32$; substituting the value of R. M. just found we have B. M. in terms of the C. M., or

$$\text{B. M.} = \text{C. M.} - \overset{\mu}{14}.18 \pm \overset{\mu}{0}.77$$

(5) COMPARISON OF VALUES FOR COEFFICIENT OF EXPANSION OF THE BERLIN BRASS METRE, NO. 49 (B. M.).

Adding to the value $\underset{\pm\ 18}{8.189}$ found above the coefficient for R. M., viz: $\alpha_{\text{R. M.}} = \underset{\pm\ 25}{+\ 10.606} \times 10^{6-}$, our comparisons give for B. M. the value $\alpha_{\text{B. M.}} = \underset{\pm\ 31}{+\ 18.795} \times 10^{-6}$

The coefficient, as determined by Assistant C. S. Peirce, is given in the Coast Survey Report for 1876, Appendix No. 15, pp. 272, 273, viz: $\overset{\mu}{18}.83$ for 1° C. between limits 3° and 18° C., a result in good accord with our value just determined.

(6) RELATION OF THE COMMITTEE MÈTRE TO THE MÈTRE DES ARCHIVES AND TO THE NEW INTERNATIONAL PROTOTYPE METRE.

In view of the fact that the Committee metre has served as the standard for all measures of the Coast and Geodetic Survey since its beginning, and that of late years an International Bureau has been established near Paris for the better definition and preservation of the length assigned to the original metre, as well as for the multiplication and distribution of such standards, it was desirable to know at the earliest date, and necessarily as yet by indirect means, what small difference there might be in the length of the new prototype metre and our Committee metre. The United States, a party to this international undertaking, expects to receive two of the National Prototype Metres and one copy made of the alloy cast at the Conservatoire des Arts et Métiers in 1874, the distribution of the new standards of length having been promised by the Bureau, to be made during the current year. In the mean time it will be of interest to know what relation our C. M. bears to the new metre *provisionally* adopted by the International Committee.* The Repsold steel metre of 1876

* NOTE: Since this paper was written the National Prototype Metre has been received by this Government. The adoption of the International Prototype Metre confirms the value assigned to the provisional metre above referred to namely $I_2 = 1$ metre $+ 6\mu$.

was sent to Paris and compared at Breteuil in January, 1883 (Appendix V, "Value of metre R, 1876," of Professional Papers No. 24, supplement by General Comstock, dated February 28, 1885),† and was found to be = one metre (provisional) + 97.81 microns at the temperature of melting ice.

We have found from the Washington comparison R. M. — C. M. $= + \overset{\mu}{84.28} - \overset{\mu}{1.1925}\,(t - 11^{\circ}.661)$;
$\pm \quad 49 \pm \quad 425$

hence at zero temperature R. M. — C. M. $= + \overset{\mu}{98.19} \pm 0.69$ microns; whence the C. M. = one metre (provisional) — 0.38 ± 0.70 microns. This result appears very satisfactory as far as it goes, since there is every reason to believe that this metre, when first standarded towards the end of the last century, represented the length of the adopted metric unit within such narrow limits of uncertainty as could not be removed by the mechanical appliances then available. The result, however, of the direct comparison made at Paris in August, 1867, by Barnard & Tresca, is not in accord with our result. According to these comparisons, which were made with the metre of the Conservatoire des Arts et Métiers, with allowance of a certain difference between this metre and that preserved at the Archives, the C. M. at the temperature of melting ice equals one metre +3.36 microns. Whatever may be the explanation of this difference, there are a number of sources of error to be considered involving questions of invariability of standard bars, the degree of perfection of method and of comparators, and above all the accuracy with which the temperature of the bars can be ascertained. We incline to the belief that the comparisons of 1867 rest on too few measures to be implicitly trusted, nor can the probable error of the result be ascertained.

It is to be expected that with the arrival of the new standards, their comparison with certain important measures of length heretofore used in the Weights and Measures Office and by the Coast and Geodetic Survey, will finally set at rest questions of the relative and absolute length of the latter.

Respectfully submitted by

CHAS. A. SCHOTT,
O. H. TITTMANN,
*Assistants, Coast and Geodetic Survey.*

† See also "Travaux et Mémoires du Bureau International, etc., Tome III.

# ABSTRACT OF RECORD OF COMPARISONS.

A.—RECORD OF COMPARISONS BETWEEN THE COMMITTEE METRE (C. M.) AND THE REPSOLD METRE (R. M.).

B.—RECORD OF COMPARISONS BETWEEN THE BERLIN METRE (B. M.) AND THE REPSOLD METRE (R. M.).

Blank page retained for pagination

*Abstract of Comparisons between C. M. and R. M.*

| Date. | Position of C. M. | Tonnelot thermometers. | | | Reduction to 22°.70 | R. M. — C. M. | | | | Remarks. |
|---|---|---|---|---|---|---|---|---|---|---|
| | | | | | | Observed diameters. | | Reduced. | | |
| | | C. M. 4335 | R. M. 4334 | Mean. | | I. | III. | I. | III. | |
| 1888. | | ° | ° | ° | μ | μ | μ | μ | μ | |
| Aug. 30, a. m. | Front. | 22.520 | 22.598 | 22.56 | —0.2 | | 75.4 | | 75.2 | Observations made in room No. 6, C. and G. S. Office, Observer O. H. T. |
| Aug. 30, p. m. | Rear. | 23.254 | 23.261 | 23.25 | +0.7 | 70.4 | | 71.1 | | |
| Aug. 31, a. m. | Rear. | 23.025 | 23.044 | 23.03 | +0.4 | | 71.7 | | 72.1 | |
| Aug. 31, p. m. | Front. | 23.323 | 23.342 | 23.33 | +0.8 | 68.4 | | 69.2 | | |
| Sept. 5, a. m. | Front. | 21.985 | 21.951 | 21.97 | —0.9 | 74.7 | | 73.8 | | |
| Sept. 5, p. m. | Rear. | 23.025 | 23.044 | 23.03 | +0.4 | | 74.7 | | 75.1 | |
| Sept. 6, a. m. | Rear. | 22.213 | 22.200 | 22.21 | —0.6 | 73.0 | | 72.4 | | |
| Sept. 6, p. m. | Front. | 22.213 | 22.249 | 22.23 | —0.6 | | 73.3 | | 72.7 | |
| Tonnelot mercurial scale, | | | | 22.70 | | | | | | |
| Reduction, | | | | —.09 | | | | | | |
| Hydrogen scale, | | | | 22.61 | | | | | | |
| Sept. 8, p. m. | Front. | 28.099 | 27.997 | 28.05 | —2.0 | | 67.0 | | 65.0 | Observations made in room No. 6, C. and G. S. Office, Observer O. H. T. |
| Sept. 10, a. m. | Rear. | 30.370 | 30.403 | 30.39 | +0.8 | 60.0 | | 60.8 | | |
| Sept. 10, p. m. | Rear. | 30.638 | 30.592 | 30.61 | +1.1 | | 64.7 | | 65.8 | |
| Sept. 11, a. m. | Front. | 29.624 | 29.599 | 29.61 | —0.1 | 65.3 | | 65.2 | | |
| Sept. 11, p. m. | Front. | 29.524 | 29.559 | 29.54 | —0.2 | 60.0 | | 59.8 | | Artificial illumination. |
| Sept. 12, a. m. | Rear. | 29.395 | 29.450 | 29.42 | —0.3 | 64.7 | | 64.4 | | |
| Sept. 12, p. m. | Rear. | [29.895] | 29.876 | 29.88 | +0.2 | 60.0 | | 60.2 | | |
| Sept. 13, a. m. | Front. | | 30.100 | 30.10 | +0.5 | 64.5 | | 65.0 | | |
| Tonnelot mercurial scale, | | | | 29.70 | | | | | | |
| Reduction, | | | | —.10 | | | | | | |
| Hydrogen scale, | | | | 29.60 | | | | | | |

*Abstract of results of compari-*

| Date. | Position of C. M. | Tonnelot thermometers. C. M. 4331. | C. M. 4332. | R. M. 4334. | R. M. 4335. | Mean temperatures. C. M. | Mean temperatures. R. M. | Differences from mean of observed temperatures. C. M. | Differences from mean of observed temperatures. R. M. |
|---|---|---|---|---|---|---|---|---|---|
| 1888. | | ° | ° | ° | ° | ° | ° | ° | ° |
| December 11, a. m. | Front. | 12.872 | 12.851 | 12.875 | 12.853 | 12.861 | 12.864 | —0.57 | —0.57 |
| December 11, p. m. | Front. | 13.002 | 13.011 | 13.025 | 13.034 | 13.007 | 13.029 | —0.71 | —0.74 |
| December 12, a. m. | Rear. | 13.021 | 13.010 | 12.984 | 12.982 | 13.015 | 12.983 | —0.72 | —0.69 |
| December 12, p. m. | Rear. | 13.171 | 13.141 | 13.113 | 13.114 | 13.166 | 13.113 | —0.87 | —0.82 |
| December 13, a. m. | Rear. | 12.822 | 12.770 | 12.754 | 12.751 | 12.796 | 12.753 | —0.50 | —0.46 |
| December 14, a. m. | Rear. | 12.352 | 12.400 | 12.316 | 12.329 | 12.376 | 12.322 | —0.08 | —0.03 |
| December 14, p. m. | Front. | 12.323 | 12.390 | 12.355 | 12.339 | 12.356 | 12.347 | —0.06 | —0.06 |
| December 15, a. m. | Front. | 11.605 | 11.610 | 11.609 | 11.617 | 11.607 | 11.613 | +0.67 | +0.68 |
| 1889. | | 4334. | 4335. | 4331. | 4332. | | | | |
| January 16, a. m. | Rear. | 11.679 | 11.662 | 11.729 | 11.692 | 11.670 | 11.710 | +0.62 | +0.58 |
| January 18, a. m. | Front. | 12.866 | 12.856 | 12.845 | 12.843 | 12.861 | 12.844 | —0.57 | -0.55 |
| January 19, a. m. | Front. | 13.304 | 13.257 | 13.272 | 13.293 | [13.280] | [13.282] | [—1.21] | [—1.21] |
| January 19, p. m. | Rear. | 13.464 | 13.439 | 13.491 | 13.493 | 13.451 | 13.492 | —1.16 | —1.20 |
| January 21, a. m. | Rear. | 11.491 | 11.473 | 11.542 | 11.524 | 11.482 | 11.533 | +0.81 | +0.76 |
| January 21, p. m. | Front. | 11.621 | 11.623 | 11.601 | 11.594 | 11.622 | 11.598 | +0.67 | +0.70 |
| January 22, a. m. | Front. | 11.072 | 11.030 | 11.032 | 11.013 | 11.051 | 11.022 | +1.24 | +1.27 |
| January 22, p. m. | Rear. | 11.092 | 11.070 | 11.132 | 11.133 | 11.081 | 11.133 | +1.21 | +1.16 |
| Mean temperature Tonnelot mercurial scale, | | | | | | 12.292 | | | |
| Reduction to hydrogen scale, | | | | | | — 0.061 | | | |
| Temperature hydrogen scale, | | | | | | 12.231 | | | |

| Date. | Position of C. M. | Tonnelot thermometers. C. M. 4331. | C. M. 4332. | R. M. 4334. | R. M. 4335. | Mean mercurial temperature. C. M. | R. M. | Mean. |
|---|---|---|---|---|---|---|---|---|
| 1889. | | ° | ° | ° | ° | ° | ° | ° |
| February 24, a. m. | Front. | —0.88 | —0.89 | —0.89 | —0.89 | —0.885 | —0.890 | —0.887 |
| February 24, p. m. | Rear. | —0.90 | —0.93 | —0.90 | —0.91 | —0.915 | —0.905 | —0.910 |
| February 25, p. m. | Rear. | —0.90 | —0.92 | —0.91 | —0.92 | —0.910 | —0.915 | —0.912 |
| February 25, p. m. | Front. | —0.78 | —0.80 | —0.81 | —0.85 | —0.790 | —0.830 | —0.810 |
| February 27, a. m. | Front. | —0.31 | —0.33 | —0.36 | —0.40 | —0.32 | —0.38 | —0.350 |
| February 27, p. m. | Rear. | —0.36 | —0.41 | —0.33 | —0.39 | —0.385 | —0.36 | —0.372 |
| February 28, a. m. | Rear. | —0.43 | —0.41 | —0.41 | —0.44 | —0.42 | —0.425 | —0.422 |
| February 28, p. m. | Front. | —0.36 | —0.36 | —0.36 | —0.37 | -0.36 | —0.365 | —0.361 |
| March 1, p. m. | Rear. | —0.12 | —0.13 | —0.13 | —0.15 | —0.13 | —0.14 | —0.132 |
| March 1, p. m. | Front. | +0.07 | +0.13 | +0.07 | +0.13 | +0.10 | +0.10 | +0.100 |
| March 2, a. m. | Rear. | —0.63 | —0.64 | —0.63 | —0.60 | —0.63 | —0.62 | —0.625 |
| March 2, p. m. | Front. | —0.48 | —0.51 | —0.51 | —0.54 | —0.49 | —0.53 | —0.510 |
| March 5, a. m. | Front. | +0.19 | +0.17 | +0.17 | +0.14 | +0.18 | +0.16 | +0.167 |
| March 5, p. m. | Rear. | +0.34 | +0.35 | +0.36 | +0.32 | +0.34 | +0.34 | +0.340 |
| March 5, p. m. | Rear. | +0.52 | +0.53 | +0.53 | +0.52 | +0.53 | +0.53 | +0.525 |
| March 5, p. m. | Front. | +0.34 | +0.34 | +0.32 | +0.32 | +0.34 | +0.32 | +0.330 |

*sons between C. M and R. M.*

| Reduction to mean temperature. | | | R. M—C. M. | | | | Remarks. |
|---|---|---|---|---|---|---|---|
| | | | Observed diameters. | | Reduced. | | |
| C. M. | R. M. | R.M—C.M. | I. | III. | I. | III. | |
| μ | μ | μ | μ | μ | μ | μ | |
| — 6.72 | — 6.02 | +0.70 | 80.0 | | 80.7 | | Observer, O. H. T. Observations made in the Standards room, Butler Building. Natural illumination. |
| — 8.37 | — 7.81 | +0.56 | | 82.1 | | 82.7 | |
| — 8.49 | — 7.29 | +1.20 | 80.2 | | 81.4 | | |
| —10.26 | — 8.66 | +1.60 | | 82.4 | | 84.0 | |
| — 5.90 | — 4.86 | +1.04 | 82.6 | | 83.6 | | |
| — 0.94 | — 0.32 | +0.62 | | 85.4 | | 86.0 | |
| — 0.71 | — 0.63 | +0.08 | 80.9 | | 81.0 | | |
| + 7.90 | + 7.18 | —0.72 | | 84.0 | | 83.3 | |
| + 7.31 | + 6.12 | —1.2 | 84.4 | | 83.2 | | Observer, O. H. T. Observations made in the Standards room, Butler Building. Natural illumination. |
| — 6.71 | — 5.81 | +0.9 | | 81.6 | | 82.5 | |
| [—14.27] | [—12.78] | [+1.5] | | | [69.3] | | |
| —13.68 | —12.67 | +1.0 | 79.5 | | 80.5 | | |
| + 9.55 | + 8.03 | —1.5 | | | 78.8 | | |
| + 7.90 | + 7.39 | —0.51 | | 83.6 | | 83.1 | |
| +14.62 | +13.41 | —1.2 | 82.4 | | 81.2 | | |
| +14.27 | +12.25 | —2.0 | | 80.4 | | 78.4 | |

| Observed diameters. | | Reduction to —0°.40 | Reduced diameters. | | Remarks. |
|---|---|---|---|---|---|
| R. M—C. M. | | | R. M—C. M. | | |
| I. | III. | | I. | III. | |
| μ | μ | μ | μ | μ | |
| | 98.0 | —0.5 | | 97.5 | Observations made in cold-storage room. Natural illumination. Microscope A on left; microscope B on right. Daylight. Observer, O. H. T. |
| 97.7 | | —0.6 | 97.1 | | |
| | 101.7 | —0.6 | | 101.1 | |
| 99.6 | | —0.5 | 99.1 | | |
| 102.6 | | 0.0 | 102.6 | | Observations made in cold-storage room. Natural illumination. Concave reflectors. Observer, O. H. T. Microscopes 2 and 3. |
| | 93.4 | 0.0 | | 93.4 | |
| 97.1 | | 0.0 | 97.1 | | |
| | 104.4 | 0.0 | | 104.4 | |
| 99.2 | | +0.3 | 99.5 | | Observations made in cold-storage room. Artificial illumination. Observer, O. H. T. Microscope B on left; microscope A on right. |
| | 97.5 | +0.5 | | 98.0 | |
| | 105.2 | —0.1 | | 105.1 | |
| | 103.1 | +0.6 | | 103.7 | |
| | 105.8 | +0.8 | | 106.6 | |
| | 99.0 | +1.0 | | 100.0 | |
| | 94.5 | +0.8 | | 95.3 | |

*Abstract of Results of Comparisons between C. M. and R. M.*

[Observations made in cold-storage room. Natural illumination. Observer, O. H. T.]

| Date. | Position of C. M. | Thermometers. | | | | | Mean temperature. | | |
|---|---|---|---|---|---|---|---|---|---|
| | | C. M. | | | R. M. | | | | |
| | | Tonnelot, 4331. | Tonnelot, 4332. | Kew, 967. | Tonnelot, 4334. | Kew, 968. | C. M. | R. M. | Mean. |
| 1889. | | ° | ° | ° | ° | ° | ° | ° | ° |
| March 9, a. m. | Front. | —4.15 | —4.10 | | —4.07 | | —4.12 | —4.07 | —4.1 |
| March 9, p. m. | Rear. | —4.4* | | | | | —4.4 | —(4.4 ) | —4.4 |
| March 9, p. m. | Rear. | —4.4* | | | | | —4.4 | —(4.4 ) | —4.4 |
| March 11, p. m. | Front. | —4.31 | | —4.17 | | —4.22 | —4.24 | —4.22 | —4.2 |
| March 12, a. m. | Rear. | —3.73 | | —3.61 | —3.63 | —3.61 | —3.67 | —3.61 | —3.64 |
| March 12, p. m. | Front. | —4.09 | | —4.06 | —4.06 | —4.06 | —4.07 | —4.06 | —4.06 |
| March 13, a. m. | Front. | —3.88 | —3.58 | —3.83 | —3.91 | —3.83 | —3.86 | —3.87 | —3.86 |
| March 13, p. m. | Front. | | —3.21 | —3.61 | —3.61 | —3.67 | —3.59 | —3.64 | —3.62 |
| March 13, p. m. | Rear. | | —3.65 | —3.22 | —3.19 | —3.28 | —3.21 | —3.24 | —3.22 |
| March 14, a. m. | Rear. | | —3.77 | —3.67 | —3.63 | —3.67 | —3.67 | —3.65 | —3.65 |
| March 14, M. | Front. | | —3.76 | —3.78 | —3.79 | —3.83 | —3.78 | —3.81 | —3.79 |
| March 14, p. m. | Front. | | —3.76 | —3.72 | —3.81 | —3.82 | —3.74 | —3.82 | —3.78 |
| March 15, a. m. | Rear. | | —4.10 | —4.17 | —4.10 | —4.17 | —4.13 | —4.13 | —4.14 |
| March 15, M. | Rear. | | —4.20 | —4.22 | | —4.17 | —4.21 | —4.17 | —4.20 |
| March 15, p. m. | Front. | —4.18 | | —4.11 | —4.11 | —4.11 | —4.14 | —4.11 | —4.13 |
| | | | | | | | | | —3.95 |

| Date. | Position of C. M. | Obs'd diff. R.M—C.M. Diameter, III. | Reduction to 3.°95 | Reduced difference R.M C.M. Diameter, III. | Remarks. |
|---|---|---|---|---|---|
| 1889. | | μ | μ | μ | |
| March 9, a. m. | Front. | 101.6 | —0.2 | 101.4 | Microscope B on left. Microscope A on right. |
| March 9, p. m. | Rear. | 105.5 | —0.5 | 105.0 | |
| March 9, p. m. | Rear. | 106.4 | —0.5 | 105.9 | |
| March 11, p. m. | Front. | 108.1 | —0.3 | 107.8 | |
| March 12, a. m. | Rear. | 108.1 | +0.3 | 108.4 | |
| March 12, p. m. | Front. | 103.9 | —0.1 | 103.8 | |
| March 13, a. m. | Front. | 103.3 | +0.1 | 103.4 | |
| March 13, p. m. | Front. | 99.8 | +0.4 | 100.2 | Microscope A on left. Microscope B on right. |
| March 13, p. m. | Rear. | 99.5 | +0.8 | 100.3 | |
| March 14, a. m. | Rear. | 98.9 | +0.3 | 99.2 | |
| March 14, M. | Front. | 103.8 | +0.1 | 103.9 | |
| March 14, p. m. | Front. | 101.6 | +0.2 | 101.8 | |
| March 15, a. m. | Rear. | 105.9 | —0.2 | 105.7 | |
| March 15, M. | Rear. | 103.6 | —0.3 | 103.3 | |
| March 15, p. m. | Front. | 103.3 | —0.2 | 103.1 | |

*Final Abstract R. M.—C. M.*

| Date. | R. M.— C. M. | Remarks. | Date. | R. M.— C. M. | Remarks. |
|---|---|---|---|---|---|
| | μ | | | μ | |
| Aug. 30, 1888, to Sept. 6, 1888. | 75.2 | In Room No. 6. | Jan. 16, 1889, to Jan. 22, 1889. | 83.2 | |
| | 71.1 | | | 82.6 | |
| | 72.1 | | | 80.6 | |
| | 69.2 | | | 78.8 | |
| | 73.8 | | | 83.1 | |
| | 75.1 | | | 81.2 | |
| | 72.4 | | | 78.5 | |
| | 72.4 | | At 12°.23 | 82.0 ± 0.35 | |
| At 22°.61 | 72.7 ± 0.48 | | Feb. 24, 1889, to Mar. 6, 1889. | 97.5 | In Cold-Storage Room. |
| Sept. 8, 1888, to Sept. 13, 1888. | 65.0 | In Room No 6. | | 97.1 | |
| | 60.8 | | | 101.1 | |
| | 65.8 | | | 99.1 | |
| | 65.2 | | | 102.6 | |
| | 59.8 | | | 93.4 | |
| | 64.4 | | | 97.1 | |
| | 60.2 | | | 104.4 | |
| | 65.0 | | | 99.5 | |
| At 29°.60 | 63.3 ± 0.61 | | | 98.0 | |
| Dec. 11, 1888, to Dec. 15, 1888. | 80.6 | In Butler Building. | | 105.1 | |
| | 82.7 | | | 103.7 | |
| | 81.4 | | | 106.6 | |
| | 84.0 | | | 100.0 | |
| | 83.6 | | | 95.3 | |
| | 86.1 | | At —0°.40 | 100.0 ± 0.67 | |
| | 81.1 | | Mar. 9, 1889, to Mar. 15, 1889. | 101.4 | |
| | 83.1 | | | 105.0 | |
| | | | | 105.9 | |
| | | | | 107.8 | |
| | | | | 108.4 | |
| | | | | 103.8 | |
| | | | | 103.4 | |
| | | | | 100.2 | |
| | | | | 100.3 | |
| | | | | 99.2 | |
| | | | | 103.9 | |
| | | | | 101.8 | |
| | | | | 105.7 | |
| | | | | 103.3 | |
| | | | | 103.1 | |
| | | | At — 3°.95 | 103.5 ± 0.47 | |

*Abstract of Results of Compari-*

| Date. | Position of B. M. | Tonnelot thermometers. | | | | Mean temperatures. | | Differences from mean of observed temperatures. | |
|---|---|---|---|---|---|---|---|---|---|
| | | B. M., No. 49. | | R. M. | | | | | |
| | | 4331. | 4334. | 4335. | 4332. | B. M. | R. M. | B. M. | R. M. |
| 1888. | | ° | ° | ° | ° | ° | ° | ° | ° |
| Sept. 15, a. m. | Rear. | | 28.671 | 28.765 | | 28.671 | 28.765 | +1.537 | +1.443 |
| Sept. 15, p. m. | Front. | | 28.933 | 28.966 | | 28.933 | 28.966 | +1.275 | +1.242 |
| Sept. 18, a. m. | Rear. | | 30.188 | 30.270 | | 30.188 | 30.270 | +0.020 | —0.062 |
| Sept. 18, p. m. | Front. | | 30.883 | 30.747 | | 30.883 | 30.747 | —0.675 | —0.539 |
| Sept. 19, a. m. | Front. | 31.264 | 31.380 | 31.224 | | 31.322 | 31.224 | —1.114 | —1.016 |
| Sept. 19, p. m. | Rear. | 31.254 | 31.340 | 31.283 | | 31.297 | 31.283 | —1.085 | —1.075 |
| | | | | | | 30.208 | | | |
| | | 4335. | | 4331. | | | | | |
| Oct. 4, a. m. | Front. | 16.567 | 16.594 | 16.584 | | 16.580 | 16.584 | +0.153 | +0.149 |
| Oct. 4, p. m. | Rear. | 16.869 | 16.903 | 16.884 | | 16.886 | 16.884 | —0.153 | —0.150 |
| | | | | | | 16.733 | | | |
| 1889. | | | | | | | | | |
| Jan. 11, a. m. | Front. | 13.642 | 13.641 | 13.592 | 13.595 | 13.642 | 13.593 | —0.52 | —0.47 |
| Jan. 11, p. m. | Rear. | 13.712 | 13.743 | 13.801 | 13.775 | 13.728 | 13.788 | —0.60 | —0.66 |
| Jan. 12, a. m. | Rear. | 13.459 | 13.483 | 13.521 | 13.503 | 13.471 | 13.512 | —0.35 | —0.39 |
| Jan. 12, p. m. | Front. | 13.520 | 13.562 | 13.541 | 13.554 | 13.541 | 13.547 | —0.42 | —0.42 |
| Jan. 14, a. m. | Front. | 12.492 | 12.526 | 12.525 | 12.492 | 12.509 | 12.508 | +0.62 | +0.62 |
| Jan. 15, p. m. | Rear. | 11.801 | 11.788 | 11.877 | 11.842 | 11.794 | 11.859 | +1.33 | +1.26 |
| | | 4331 | 4332 | 4334 | 4335 | 13.124 | | | |
| Mar. 6, a. m. | Front. | +0.429 | +0.444 | +0.425 | +0.411 | 0.436 | 0.418 | —0.05 | —0.03 |
| Mar. 6, p. m. | Rear. | 0.539 | 0.535 | 0.565 | 0.586 | 0.537 | 0.575 | —0.15 | —0.19 |
| Mar. 7, a. m. | Rear. | 0.280 | 0.294 | 0.314 | 0.319 | 0.287 | 0.316 | +0.10 | +0.07 |
| Mar. 7, p. m. | Rear. | 0.310 | 0.334 | 0.374 | 0.351 | 0.322 | 0.362 | +0.07 | +0.03 |
| Mar. 7, p. m. | Front. | 0.469 | 0.454 | 0.475 | 0.431 | 0.462 | 0.453 | —0.07 | —0.06 |
| Mar. 8, a. m. | Front. | 0.270 | 0.254 | 0.264 | 0.227 | 0.262 | 0.245 | +0.13 | +0.15 |
| | | | | | | 0.39 | | | |

*sons between B. M. (No. 49) and R. M.*

| Reduction to mean temperature. | | | B. M. — R. M. | | Remarks. |
|---|---|---|---|---|---|
| B. M. | R. M. | B.M.—R.M. | Observed differences. | Diff. reduced to mean temperature. | |
| μ | μ | μ | μ | μ | |
| +28.941 | +15.238 | +13.7 | +121.9 | +135.6 | Observations in Room No. 6, C. & G. S. Office. Observer, O. H. T. |
| +24.008 | +13.116 | +10.9 | +121.0 | +131.9 | |
| + 0.378 | — 0.655 | + 1.0 | +133.8 | +134.8 | |
| —12.710 | — 5.692 | — 7.0 | +142.3 | +135.3 | |
| —20.977 | —10.729 | —10.3 | +144.4 | +134.1 | |
| —20.431 | —11.352 | — 9.1 | +144.1 | +135.4 | |
| | | B. M.—R. M.= | | +134.4 ± 0.37 | At 30°.208 Merc. Temp. or 30.106 Hydro. |
| + 2.88 | + 1.58 | + 1.3 | + 20.98 | + 22.3 | Observer, O. H. T. |
| — 2.88 | — 1.58 | — 1.3 | + 24.71 | + 23.4 | |
| | | B. M. -R.M.= | | + 22.8 | At 16°.733 Merc. Temp. or 16°.66 Hydro. |
| — 9.8 | — 5.0 | — 4.8 | + 0.4 | — 4.4 | Observations in Standards Room, Butler Building. Observer, O. H. T. |
| —11.3 | — 7.0 | — 4.3 | — 1.9 | — 6.2 | |
| — 6.6 | — 4.1 | — 2.5 | — 2.1 | — 4.6 | |
| — 7.9 | — 4.4 | — 3.5 | — 0.7 | — 4.2 | |
| +11.7 | + 6.5 | + 5.2 | — 10.1 | — 4.9 | |
| +25.0 | +13.3 | +11.7 | — 20.0 | — 8.3 | |
| | | B.M.—R.M.= | | — 5.4 | At 13°.124 Merc. Temp., or 13°.060 Hydro. |
| — 0.94 | — 0.32 | — 0.6 | —111.9 | —112.5 | Observations made in Cold-Storage Room. Observer, O. H. T. |
| — 2.82 | — 2.01 | — 0.8 | —108.3 | —109.1 | |
| + 1.88 | + 0.74 | + 1.1 | —109.2 | —108.1 | |
| + 1.32 | + 0.32 | + 1.0 | —110.8 | —109.8 | |
| — 1.32 | — 0.63 | — 0.7 | —107.1 | —107.8 | |
| + 2.45 | + 1.58 | + 0.9 | —107.8 | —106.9 | |
| | | B.M.—R.M.= | | —109.0 ± 0.54 | At 0°.39 Merc. Temp. |

***Final Abstract B. M.—R. M.***

| Date. | Temperature Hyd. | B. M. — R. M. | No. Comp's. | Remarks. |
|---|---|---|---|---|
| | ° | μ | | |
| Sept., 1888. | 30.11 | + 134.4 | 6 | Room No. 6. |
| Oct., 1888. | 16.66 | + 22.8 | 2 | Room No. 6. |
| Jan., 1889. | 13.06 | — 5.4 | 6 | Butler Building. |
| Mar., 1889. | 0.39 | — 109.0 | 6 | Cold-Storage Room. |

Blank page retained for pagination

# APPENDIX No. 7.—1889.

## THE NEED OF A REMEASUREMENT OF THE PERUVIAN ARC.

By ERASMUS D. PRESTON, Assistant.

U. S. COAST AND GEODETIC SURVEY,
*Washington, D. C., July*, 1889.

One hundred and fifty years have passed since Bouguer was making his observations in the measurement of the Peruvian arc. The geodetic science of to-day is so much occupied with the slight deviations of the surface of the earth from a strictly elliptical figure that it is hard to realize that even in the last century, it was an unsettled question whether the equatorial or polar axis was the longer.

A clock having been carried from Paris to the equator was found to lose two minutes each day. This fact was supposed to strengthen Newton's theory that the earth was an oblate spheroid. On the other hand, Cassini's surveys in France at the beginning of the last century indicated a prolate spheroid. It was to reconcile these two determinations that the French Academy undertook the measurements of Meridional arcs; one on a frozen river in Lapland, the other above the clouds in Peru.

Parenthetically it should be stated, however, that the Peruvian arc, so called, is not in Peru as defined by the geography of to-day, but more than a hundred miles north of it in Ecuador. When the results of these two expeditions were made known, the scientific world accepted Newton's theory, and all later measures have only served to confirm it.

Let us pause just for an instant to examine the triangulation by Cassini, and the time determination by Richer. Looking at the data with our present knowledge of the accuracy attainable in the two kinds of measurement, it seems strange that the former could for a moment have cast doubt on the latter. In the first place, Cassini's results do not agree among themselves. He gives the following statement of the length of one degree in toises:

| $\varphi$ | $\tau$ |
|---|---|
| 49° 56′ | 56970 |
| 49° 22′ | 57060 |
| 47° 57′ | 57098 |

Even were there no other reason for distrusting the observations, their disagreement would almost condemn them. We now know that the length of one degree in latitude 49° changes about ten toises per degree, so that the change of more than one hundred and thirty toises in a space of as many miles, indicates either some large error, or a value for the earth's radii entirely incompatible with even the rudest observations. Besides, if the first difference should be accepted, it would require the place of observation to be in a latitude very different from that known to have been the case. Therefore the triangulation in itself is not very trustworthy. Moreover, any assumption in regard to the ellipticity of the meridian, derived from measures not extending beyond two degrees, is extremely hazardous.

On the other hand, when we consider that Richer's clock lost two minutes daily, and that it must have been a comparatively easy matter even at that time, to get differential time within a second, it is plain that the only source of error worth examining is that due to the change of the length of the pendulum. Barring accidents, and leaving to one side the effect of temperature, which must have been well understood and taken account of by the observer, the length could not have changed by nearly so much as its one-thousandth part, and as the time varies as the square root of the length of the pendulum, the time of one oscillation could not have been in error more than one-half this amount. Hence no error can be admitted that would materially change the result, and the pendulum work might have been accepted as demonstrating the oblateness of the figure. But the Academy resolved upon an independent determination, and the two expeditions were equipped.

Bouguer set out on May 6, 1735, and after a journey of more than a year arrived at his destination. The party was absent about nine years, but the triangulation and base measurements were executed between December, 1736, and August, 1739. Astronomical observations to determine the amplitude of the arc were made between July, 1741, and January, 1743, and the party arrived at the mouth of the Magdalena River on September 30, of the same year. The pendulum was swung at Porto Bello, Isthmus of Panama, on the outward trip and at Petit Goave, Hayti, on the return voyage. The results are incorporated in the account of the equatorial work. Three gravity determinations were made in Peru; at the sea-level, at Quito (9,374 feet elevation) and on the summit of Pichincha (15,564 feet). Magnetic observations were also carried on, and a general study made of the natural history and physical features of the country.

We must not lose sight of the fact that the work was undertaken to decide between the relative lengths of the earth's axes. Several methods of arriving at this result was therefore considered. It was once thought to supply sufficient data to decide the whole question by the equatoria observations alone: measuring for this purpose a degree of latitude and one of longitude in the same locality. But recognizing the fact that with the means at hand, the former would be subject to an error of $\frac{1}{1500}$th part, while the latter would be uncertain by about six times as much, the preference was given to the degrees of the meridian. Measures had already been made in France, and from the nature of the involute curve, formed by the intersection of the earth's radii for any given meridian, it was admitted that combining the equatorial measures with those of a middle latitude, the error to be expected in the ratio of the two axes was only $\frac{1}{1440}$th part; and that a combination with arctic measures would reduce the error to about two-thirds as much ($\frac{1}{2030}$). The errors attributed to accidental causes rest on the assumption that in each astronomical observation the observer is liable to be mistaken by three or four seconds of arc, and that in noting signals for longitude, one second of time would be the error expected.

After the arc had been measured, it became a matter of some difficulty to combine it with the French and arctic work. Every supposition made in regard to the meridian, supposing that it could be represented by an elliptical curve, seemed to do violence to the results of observation.

A combination was first made, using the arctic and equatorial arcs, the law being that of the square of the sines. This led to a ratio of 214 to 215 for the axes. Then when the middle arc was re-measured, and to the three meridian arcs a longitudinal one was added, this ratio was changed and 222 to 223 given. The formula was still that of the sines squared. Later, an error was discovered in this remeasurement. Picard had used a toise for his base measures, which was too short by its one-thousandth part. The introduction of this new value modified the result so essentially that the law previously adopted no longer satisfied the observations within admissible errors. The formula was changed to one where the increments of the length of the degree varied as the fourth power of the sines of the latitude, and a ratio of 178 to 179 was given for the length of the axes.

The introduction of a power of the sines higher than the square was done reluctantly. But it was found that in order to represent the curve by the second power of the function, supposing the three arcs subject to the same error, it was necessary to increase the degree in France by 69 toises, and diminish the other two by an equal amount. This would have re-established the ratio 214 to 215 and would have been nearer the truth, as we now know. But such large errors were not thought possible. In fact, reasoning from their accidental errors of observation, only an error

of 17 toises, could be admitted for the middle degree, and 44 for the equatorial one. This would necessitate subtracting 140 toises from the northern one, which seemed beyond all reason. The procedure, however, would make the meridian a perfect ellipse and give a ratio of 250 to 251.

When compared with Newton's theoretical value of the ellipticity, it was remarked that this erred in defect about as much as the previous conclusion had erred in excess. Therefore the observations left the choice of only two suppositions, either that of the fourth power of the sines, or that of some function of the latitude itself. The arc of longitude which had been measured was brought to bear on the decision, and it was found that the measure would, by the first solution, be in error by 150 toises, whereas by the second the error would be reduced to 18. This decided the question, and the law of the fourth powers and the ratio 178 to 179 was adopted.

This is the result as given by Bouguer in his discussion of the Peruvian work. Of course it is far from being the truth; but the recapitulation shows to what extent the measures of 150 years ago were defective, and gives an idea of the influence of this equatorial arc on the elements of the ellipsoid that are used in all geodetic computations of the present day. A later discussion improved this result, and now there are so many middle arcs entering with great weight on account of their increased accuracy, that the Peruvian arc has not the importance it once had. Notwithstanding it is believed that a re-measurement would so modify it as to materially change the value now adopted for the earth's ellipticity.

We now turn to examine the work more in detail. The first base was measured on the plain of Yarouqui, about 15 miles east of Quito. Eight days were devoted to clearing the line. Its true direction was N. 19° 26′ W. Three wooden rods, each 20 feet long, with copper contact plates, projecting 1½ inches at each end were used in making the measurement. The plates were so arranged as to make contact at right angles to each other. A rope was stretched for alignment, and the inclination of each rod was determined by means of a level. Twenty-five days were consumed in the work, which was exceedingly laborious because the rods were laid on the ground. This course was pursued on account of the violent wind. Two rods were always in position The rear one, carried forward by Indians, was brought into contact with as little shock as possible; but with a heavy rod in the hands of several untrained persons, it is difficult to see how shocks were avoided. An iron toise was carried along, kept in the shade, and comparisons were made always daily and sometimes oftener. The temperature and humidity of the air affected the wooden rods considerably. The work was begun from both ends and the parties compared their rods when they met in the middle. The south party, however, used tressels, and it was noticed that the effect of wind on the plumb-line, and the consequent error in the length of the base, would be in opposite directions for the two measures. In spite of this fact, and with the exceedingly rough method of making the contact, the two independent measures only differed by about 3 inches for a distance of more than 6,000 toises, which is about $\frac{1}{150000}$th part. This is a degree of accuracy far beyond what we can reasonably expect in work of this kind, and there must certainly have been large compensating errors.

Base measures of the present time, with all our improved methods of dealing with the temperature, perfected contact slides, better ways of alignment, and more skillful manipulation of the bars by persons trained to the work, do not give much better results.

The actual measures gave somewhat less than 6,273 toises for the length. It was estimated that the necessary corrections would increase this quantity, and in order to have their base an exact number of toises, one of the end marks was moved 3 inches and 8 lines. It is hard to see what was to be gained by this. Of course the round number would be broken by the solution of the first triangle. Their own measures showed an uncertainty of several inches. Therefore, asserting that the base contained an exact number of toises within the thickness of a line, goes for nothing. Moreover, the subsequent reduction gave a correction, different from what they had applied, so that the finally adopted length of the base was not 6,274 toises, as they wished it to be, but 4 inches and 1½ lines more than this.

The length of the straight line connecting the two extremities of the base was found by first comparing the actual measure with the line as traced on the ground, and then deducing the quantity sought from this last line.

An approximate value for the base line substituted in the formula*

$$Z = \int \frac{c\ dx}{\sqrt{c^2 + (b + x)^2}}$$

gives the correction to reduce the actual measures to the ground line, considering it sensibly straight for each of the seven parts into which the whole base was divided. The absolute and relative heights of the extremities and the intermediate points were determined, which furnished the data for referring the ground line to the air line connecting the extremities. The result of the entire work was:

| | |
|---|---|
| Ground line longer than actual measure | 1.52101 |
| Ground line longer than air line | 0.23100 |
| Air line longer than actual measure | 1.29001 |

The correction for temperature applied to the Tarqui base would indicate a coefficient of expansion of .000015 for the wooden rods, which is between that of glass and brass, but somewhat nearer the latter. But then not very much reliance can be put in the temperatures. That of the base of verification was only estimated † and could not certainly have been known within several degrees. But the accordance of the results, errors of compensation being disregarded, would indicate that the temperatures were correct to within one-fourth of a degree. An examination of the record shows conclusively that this could not have been the case. On the other hand, the Spanish officers correct the second base by about 8 feet, which would require a coefficient of expansion, based on the same difference of temperature, at least twice that given above.‡ It then appears that the temperature factor alone would give rise to uncertainties far greater than the difference between the two results.

The angles of the triangulation were measured with quadrants whose radii varied from 2 to 3 feet. Two telescopes were provided, a fixed and movable one, the whole instrument being universally mounted by means of two right-angled cylindrical elbows. Micrometers were here applied to instruments of this kind for the first time, and it is believed that Bouguer was the first who called attention to errors of eccentricity. As the limb of the instrument only included 90 degrees, these errors could not be studied by the method now employed of comparing diametric readings throughout the entire circle. Independent measures of two known angles gave two equations in which the known quantities were the errors, and a function of the angle itself, and the unknown quanties were the rectangular co-ordinates of the center of rotation, referred to the center of graduation as the origin. These co-ordinates being known from the solution of the equations, corrections applicable to any part of the limb could be calculated. Besides this, six or seven angles, which together closed the horizon, were measured. These were corrected for inclination and their sum compared with 360°. The error of closing was on the average about two minutes. Measures of equilateral triangles gave an additive correction of 20″ for an angle of 60°. Other combinations showed a correction of 40″ for 90°. The separate spaces of 5 degrees were examined by comparing with a known angle of this magnitude. A month was devoted to the study of the errors of the instrument.

With instruments capable of not more than this degree of accuracy we can not expect a close agreement between the measured and calculated bases. They differ by about two feet. The triangulation is 200 miles long and contains thirty-two principal triangles. But the result of the side computations from this principal network was twice modified. Once at the eighth triangle, where some auxiliary figures gave a result different by 2½ toises from the regular work, and again at the sixteenth, where results having a range of seven-tenths of a toise were obtained from three different methods of deriving the same line. In both these cases the auxiliary work was combined with the regular triangulation, and the resulting line, upon which

* The earth's radius is $c$; $x$ the length of the line, and $b$ an auxiliary constant.

† Mesure des trois premiers degrés du Méridien, par M. de la Condamine, Paris, 1751, p. 83; see also in this connection "Zeitschrift für Instrumentenkunde," August 1885, p. 271, and "Resultate über die peruanische Gradmessung." Monat. Corresp. 1887, p. 240.

‡ Observaciones astronómicas y phisicas hechas de órden de S. M. en los regnos del Perú. Por Juan y Ulloa, Madrid, 1748, p. 166.

the succeeding work depended, was changed by $1\frac{1}{10}$ toises in the first instance and by three-tenths of a toise in the second; so that we should not be surprised at a much greater discrepancy between calculation and observation at the end of the chain of triangles. Bouguer shows that admitting an error of 15″ in each angle, the accumulation of these throughout the entire work would produce an error in the second base of about 25 toises, but adds that a certain compensation must be expected among so many errors.

After having finished the triangulation, astronomical observations were undertaken to determine the amplitude of the arc. They were made with a sector having a radius of 12 feet and a graduated arc of about 3 degrees. Although this is confessedly the weakest part of all the equatorial work, the methods employed show a keen appreciation of many sources of error. The limb was graduated by laying off an aliquot part of the radius as a chord. This was chosen with reference to the particular star to be observed, and the true zenith distance was found by applying to this known arc a small micrometer correction. The modern work with the zenith telescope is but a repetition of this same principle; for here the absolute zenith distance of the two stars is for the moment disregarded, but the excess of one over the other is measured, and applied to a function of their declinations, which are quantities determined by other investigations.

The precaution was taken in the Peruvian work to make part of the measures on the same star, and at the same time, at both extremities of the arc. This would eliminate any effect of uncertainty in the constants for precession, abberration, and nutation, which were not, at that time, very well determined. But Zach has re-reduced the observations of 1742 and 1743,* and finds a difference of less than 1″ between the results for the simultaneous observations and those deduced from all the work during these two years. The instrument was reversed several times, thus giving values under different conditions, and it is said that no discordant observations were rejected.† The method of reversal is referred to as having been invented by Picard, and it is probable that this principle, now so often applied and so essential in all instrumental work, was here systematically used for the first time. Its effect in this case was to eliminate the eccentricity of the zero point of the micrometer.

The value of the micrometer was found from terrestrial measures, using the known length of portions of the base, and lines erected perpendicular thereto. The meridian was found by observing, at the moment of culmination, the direction of a beam of sunlight, admitted through a hole in the roof of the observatory. The method was supposed to give the true direction with an error not larger than one minute of arc.

The accuracy of the measurement of a star's zenith distance appears to depend principally on the stability of the limb of the instrument, and the ability of the observer to set the initial point of the arc in exact coincidence with the plumb-line. There seems to be nothing said as to how this was accomplished, but it is easily seen that it must have been a work requiring much care. The measures of the star's zenith distance are given to the nearest second. Indeed the three results for the arc's amplitude, have a range of only three seconds. The following were the results from the three stars:

| | |
|---|---|
| $\varepsilon$ Orionis | 3° 7′ 1″ |
| $\theta$ Aquilæ | 3° 6′ 59″ |
| $\alpha$ Aquarius | 3° 6′ 58″ |

These are the results considered by the observers to be the best. They do not represent all the observations, but were selected on account of the favorable conditions obtaining at the time they were made. The sector had also undergone some improvement. But a mean value from all the results obtained at both stations gives 58″, which agrees more closely than one would expect from the range of the individual values. Zach estimates that the total error in the equatorial degree will not exceed 50 toises, 38 being for the astronomical and 12 for the geodetic part of the work (Monatliche Correspondenz, 1807). This is based, however, on Bouguer's and La Condamine's estimate of the accuracy of the astronomical work (page 251). Since the radius of the sector was 12 feet, one second on the limb would be about $\frac{1}{1400}$th of an inch. To make a plumb-line, suspended freely, coincide with a mark on a scale at its side, to within less than this

* Ueber die Gradmessung am Aequator; Monat. Corres. Vol. XXVI, page 39.
† Figure de la Terre par Bouguer, Paris, 1749, p. 262.

quantity, must have been a matter of difficulty. In this operation we have in all probability the sources of the largest discrepancies.

The flexure of the sector was also studied. Experiments were made on an iron bar, from which it was concluded that the flexure varied as the fourth power of the length. It was found, moreover, that when the radius of the sector was placed horizontally its flexure amounted to one-twelfth of an inch. This was shown to be inappreciable when the inclination was only a few degrees, and when the objective of the telescope was attached to the centre of the sector.

Azimuth observations were made at both bases and at three intermediate points. The agreement between the observed directions and those determined by triangulation is always within less than one minute; the discrepancy at the last base being forty seconds. The sun was invariably used, and the angle between it and a signal was measured with a quadrant. The errors in orientation, estimated liberally, will not change the total length of the arc more than a fraction of a second at each end. Therefore the question of azimuth is not one of vital importance.

We now come to perhaps the most interesting part of Bouguer's work. Not satisfied with investigating the exterior shape of the earth, he determined to study also its interior condition. It had been known for more than fifty years that a pendulum oscillated more slowly at the equator than near the pole, and finding himself not only in a latitude where the force of gravity was the least, but also in a country where there were exceptional facilities for the study of this force at great elevations, he deemed it his duty to devote some time to the investigation of the subject. Of the two methods, either comparing the times of oscillation by the same pendulum, or comparing the lengths of two different pendulums, vibrating in the same time, he chose the former. In this he has been followed by all later observers. Of course his results can not now be regarded as of very great value, both on account of the unsuitable methods and inferior instruments employed. But the work pointed in a certain direction, which has been confirmed in a general way by some more recent and accurate determinations. His method of getting time would not now be used in gravity observations, although modern instruments would increase the accuracy of the result several fold. It is doubtful whether, with his instruments, and often using single altitudes of stars, the time was correct within several seconds. About one and one-half hours may be taken as the duration of a swing, so that with the uncertain clock correction, and the short duration of the experiment, great discrepancies in the individual swings were unavoidable. The pendulum was of an inaccurate type, and its length was found by simply holding an iron bar by the side of a thread stretched by an ounce weight. Contact with the clamp above and the bob below was examined either by means of a magnifying glass or by the naked eye.

The individual results, for the length of the seconds pendulum at Quito, where the conditions were favorable, have a range of about $\frac{1}{6000}$ part. This would correspond to discrepancies in the times of one oscillation of less than one unit in the fourth place of decimals. Under the circumstances the accordance is good.

The result was corrected for buoyancy and temperature. The former was here applied for the first time in pendulum observations. It was estimated that the density of the air on the top of Pichincha was $\frac{1}{11000}$ of that of the metal composing the pendulum bob, and since gravity varies inversely as the length of the seconds pendulum, the length found was increased in this same ratio. No correction seems to have been made for the amplitude of oscillation.

When the necessary reductions were made, it was found that gravity at the sea-level, was diminished by $\frac{1}{1331}$ part at Quito, and by $\frac{1}{845}$ part on the summit of Pichincha. Since the distance from the earth's centre had been increased in the first instance by its $\frac{1}{2237}$ part and in the second by its $\frac{1}{1348}$ part, the results indicated a law not very different from that of the inverse square of the distance. But gravity had not changed enough in either case to satisfy the law. The conclusion, therefore, was that some influence, not exactly understood, increased the force of gravity in both cases. Naturally, attention was drawn to the high table-land lying between the stations and the sea. It was estimated that the effect of this would be one-half of that of a shell of matter of the same density and thickness encircling the whole earth. Granting this, the diminution of gravity in passing from the sea to the summit would be

$$\frac{2h}{r}\left(1-\frac{3\delta}{4\Delta}\right)$$

where $h$ is the height of the station above the sea, $r$ is the radius of the earth, and $\delta$ and $\Delta$ are the respective mean densities of the table-land and earth.

Now, this diminution was found by the pendulum to be $\frac{1}{1331}$, which, compared with the above expression, leads to the conclusion that the matter composing the table-land has only about one-fifth the density of the earth. The result was something of a surprise at the time, and doubts began to arise as to whether the interior of the earth could be, as some supposed, a fluid mass surrounded by a thin shell. It could not be denied that the density of the surface was less than that of the interior, because it was shown that in order that their densities be at least equal, the length of the seconds pendulum must be in error by about one-thirtieth of an inch, which, even with the rough method employed, was too great an error to be admitted.

If the land lying between the upper station and the sea be regarded as a plain of infinite extent, the same result ensues, and the formula deduced from this point of view is of somewhat simpler derivation. Clarke arrives at the same result by regarding the intervening matter as either a cone, cylinder, or segment of a sphere, where the horizontal dimensions are great compared with the vertical ones. In calculating some attractions in the Hawaiian Islands, the matter was treated rigorously as a cone, and the resultant attraction at the foot of the mountain, based on this value, agreed closely with that derived independently by the latitude observations and triangulation.

The value of the radius of the earth employed in the Peruvian investigation was about 12,000 metres too large. Introducing the value now accepted we get a density for the Andes somewhat greater. The change is in the right direction, but it is not enough. The rocks in Peru probably have a density of about 2, or possibly less, and if the sea-level is in error by 100 toises, the pendulum work would give about this density for the underlying mass.

The method used in finding the absolute height of the base line, to which all the elevations were referred, was by triangulation. The results were roughly checked by the barometer. From Niguas, a point between Quito and the mouth of the Inca River, angles of elevation were taken to several mountain peaks, of which Pichincha was one. Niguas was also visible from a point near the sea-level. The distances being approximately calculated, with some of the angles concluded, the elevations could be determined with some degree of accuracy. The last station was estimated from barometer readings to be about 30 toises above the sea. But that not much confidence could be placed in the instrument is plain from the fact, afterwards stated, that weighing all circumstances it was concluded to fix the difference at 40 or 42 toises. The result was checked by a very rough estimate of the inclination of the river-bed and the velocity of the current. Knowing the relation between the velocity and inclination at a point near the station, and determining the velocity further down the stream, the inclination was calculated. Then from the measured horizontal distance, and the inclination, the vertical height resulted. It is evident that not much reliance is to be put in such a determination; but perhaps the error is considerably inside some others entering into the deduced height of Pichincha.

The angles of elevation were measured with a quadrant which might give results as much as 30″ from the truth. Then, as there were mountains back of the station, 12,000 feet high in one case and 15,000 in the other, the angles of elevation may have been in error in either case by the greater part of a minute. And errors from attraction would be accumulative, since Niguas is on the mountain flank. The distance from the sea to Ilinissa, with which Pichincha was connected, was found from the known difference of latitude and the azimuth. It seems therefore probable that the total elevation may have been in error by as much as 50 toises. This is not enough to bring the mean density of the Andes into tolerable accord with that of the surface rock.

It is difficult to estimate accurately the probable error of the distance between the two extremities of the arc, because sufficient data are not available. Take one-eighth of a foot, which is one-half the difference between the results, as the probable error of one measure of the base line. This is composed of errors in the lengths of the rods and errors of measure, properly so called. The error in the entire base as depending on the former, varies as the length, and as depending on the latter, as the square root of the length. Assume these to be equal. This would give for the uncertainty of one of the rods (20 feet), 0.0004 inch or less than $\frac{1}{500000}$th part, and for the uncertainty of making contact about $\frac{1}{500}$ of an inch.

Either of these errors is not only much smaller than we can expect from work done under the circumstances, but they are actually less than are generally realized in modern measures. Therefore, when we consider the means of comparison with the standard and the method of placing the bars on the ground, the close agreement must be considered entirely accidental, and in no wise to be taken as a criterion of the accuracy of the work.

Any error in the linear measure is transmitted through the triangulation, and the probable error in the last side will depend on the average correction to a direction as determined from the shape of the triangles and their number. To this is to be added the error in the base, which transmits itself independently, and its effect depends on the relation between the base and the last side. The average direction error, resulting from joining points in a triangulation, is about twice as much as the average direction error arising from closing the horizon at any one point. Regarding the probable errors of the base and angles as the differentials of those quantities, the uncertainty of any side may be computed by a formula involving these differentials and known functions of the angles.

Taking eight seconds as the probable error of an angle, which is less than that estimated by the observer, we calculate the uncertainty of the last side, as depending on the angle equations alone to be slightly more than 10 feet. This result is based on the formula

$$r_0 = ar \sin 1'' \sqrt{\cot^2 A + \cot^2 B}$$

which assumes that one of the angles in each triangle is a concluded one. The true probable error where all the angles are measured would be somewhat less than that given. Nevertheless, all the circumstances being considered, we may assume the uncertainty of the last line to be not far from 12 feet. The chances are that this is an underestimate. This error, as we have seen, is about that discovered near the middle of the chain, and which influenced all subsequent work by one-half its amount. The error in the base is now disregarded, because, although it is much larger than the results of the measures would indicate, its effect on the last side would still be small in comparison with that resulting from the angle equations.

The astronomical observations agree among themselves, but it was not suspected at the time that the mountains might affect the plumb-line by at least thirty times as much as the results were supposed to be in error. When the work was done, instruments and methods had not been brought to that degree of perfection necessary to detect these small influences. Since then many striking cases have been brought to light; 22″ deviation having been noticed in India, 16″ in Russia, and 29″ in the Hawaiian Islands. In the example near Moscow there are no mountains to account for the phenomena, and the supposition is that the density of the underlying strata may be subject to great variations, or that large subterranean caverns may exist. Archdeacon Pratt has shown that small changes of density, if extended over a considerable area, may produce very perceptible deflections of the vertical. The Indian example is produced by the Himalayas. The Hawaiian is the result of the attraction of Haleakala, an extinct volcano 10,000 feet high.

When we consider that between the extremities of the Peruvian arc, there is a continuous range of mountains, varying in height from 9,000 feet on the plateau of Cochesqui, to 19,000 at the summit of Chimborazo, and remembering that the arc was terminated at a point where the elevation dropped suddenly several thousand feet, it is evident there must have been enormous differences between the astronomical and geodetic latitudes.

Judging from analogy with other cases, similar, either in the volume of the mountains, or the density of the matter, it seems not unlikely that the amplitude of the arc may be in error by many seconds. Indeed, if we take the data used in La Place's first discussion, the Peruvian latitudes should be changed by about 10″ in order to give an ellipticity conforming reasonably with our present value. And the required change shows that the plumb-line was drawn towards the mountains.

The errors in the measures of the two bases, in the triangulation, in the altitudes, or in the azimuths, could not have an influence at all comparable to this, so that a simple redetermination of the latitudes would very much improve the result. In fixing the figure of the earth, an equatorial arc enters with great weight, and we find that in a combination by least squares of nine arcs used by La Place, an error of one minute in the amplitude of the equatorial arc would reduce the

ellipticity to one-half its original value. This seems to be a great change for the supposed error, but it must be remembered that not only is the arc at the equator, and therefore has great influence in the determination of the elliptic figure, but also that it is a comparatively short arc, and hence any error in the amplitude has a proportionately greater effect on the length of a degree deduced therefrom.

The individual influence of arcs, where many enter into the determination, should not, however, be overestimated. If we suppose arcs of one degree to be measured from the pole to the equator, say 10° apart, their weights in fixing the polar axis are approximately as the numbers 39, 43, 54, 70, 89, 111, 131, 146, 157, 161, and in the determination of the equatorial axis these same numbers apply in an inverse order. A curve plotted on rectangular co-ordinates, with the earth's radii and the above weights as arguments, has a point of inflection in middle latitudes, and since the ellipticity is unity minus the ratio of the two axes, middle arcs have very little influence on the ellipticity.

The pendulum observations indicate that the density of the mountains is about one-fifth the mean density of the earth. We may therefore assume that the Andes in the neighborhood of Quito, are one-half as dense as the general surface of the earth; and if we take 15″ for the deflection at each end of the arc, the ellipticity of the figure is changed by about one-fourth part of itself.

The effect of any change in an equatorial arc on the figure of the earth, as deduced from the nine arcs above mentioned, is easily found. The conditional equations are combined by least squares in order to find the values of M and N in the equation,

$$d = M + N \sin^2 l$$

where $d$ is the length of one degree in latitude $l$, M is the length of one degree at the equator, and N is the difference in length between the equatorial and polar degree. The change in length of the equatorial degree will be given by differentiating an expression of the form

$$\frac{\Sigma b^2 (\Sigma a - \Sigma ab)}{9 \Sigma b^2 - (\Sigma b)^2}$$

where $a$ is the independent variable. The degree being at the equator, the differential of $\Sigma ab$ is zero; and the change in the length of the equatorial degree from the solution of the normal equations would be about two-thirds the assumed linear error in the individual arc. Knowing the differentials of M and N, the changes produced in the eccentricity and ellipticity are obtained without difficulty.

It is a singular fact that the first combination of the Lapland and Peruvian arcs gave a value for the ellipticity quite as near the truth as was deduced by La Place fifty years later, using the accumulated data furnished by improved instruments and methods. This is partly owing to the fact that the two arcs, having the greatest influence from their position and length, remained unaltered.

La Place's combination gives a value in excess, and the supposition of the plumb-line being deflected towards the centre of the arc changes the value in the right direction. How much allowance should be made for attraction it is difficult to say, as the configuration of the land is not known with sufficient accuracy. The indications are, that even admitting the small density of the mountains, the deflections are much larger than would be necessary to bring this arc into accord with the others, and give a value for the ellipticity called for by modern observations in middle latitudes. If we accept the data in La Place's first combination, a deflection of 11″ at each end of the arc would be required for this purpose.

There seems to have been some compensation of errors, which has given the Peruvian arc a value conforming closely with our present spheroid. But its agreement in this respect is no excuse for not remeasuring it. The measures of the base line agree within a few inches, but no one who has examined the case believes that this is anything but an accident. The combination of this arc with some other recent ones in the determination of the figure of the earth, gives corrections for the equatorial latitudes even smaller than those required by points whose positions

were determined with greater precision, and where the direction of the plumb-line is much less disturbed by attraction. These small corrections would probably not be confirmed by a new measure.

Notwithstanding, this work was well done considering the circumstances and the state of science at the time. Bouguer and his associates were scientific men who thoroughly understood the requirements of the case, and executed the work with the utmost fidelity. The necessity for a greater or less degree of accuracy, according to the kind of observations, and the bearing of each partial result on the final one was the source of constant study. Many principles of work here practiced for the first time have been adhered to by all later observers. But the advantage of repeating this work would come from the great improvements in instruments, and the consequent bringing to light of influences that were then unknown. Nothing at the time was known of spherical excess in geodesy. The theory of least squares was undiscovered, and the method of equal zenith distances had never been applied to the determinations of latitude. We now have also the compensating base apparatus and many perfected forms of the pendulum for the measurement of the force of gravity. In fact in every class of work the errors at present range from one-tenth to one-hundredth of what was then considered admissible.

Add to this that there is no check on the astronomical latitudes, which are doubly important on account of the shortness of the arc; that the elevation above the sea is very uncertain; that their own observations show an uncertainty of 7 or 8 feet in the sides of the triangles, and that the arc enters into the determination of the ellipse with great effect owing to its geographical position, and it must be conceded that the geodetic science of to-day demands the re-measurement of the Peruvian arc. It is high time that the equatorial work be put on the same footing as the other data entering into this important problem.

ERASMUS D. PRESTON,
*Assistant Coast and Geodetic Survey.*

# APPENDIX No. 8.—1889.

## TELEGRAPHIC DETERMINATION OF THE LONGITUDE OF A STATION ON MOUNT HAMILTON, CALIFORNIA, AND ITS TRIGONOMETRICAL CONNECTION WITH THE LICK OBSERVATORY.

Field Work by C. H. SINCLAIR, Assistant, and R. A. MARR, Sub-Assistant.
Report by CHARLES A. SCHOTT, Assistant.

In preparing this report on the resulting longitude of Mount Hamilton, Cal., one of the trigonometrical stations of the Survey, and proposing the same for early publication, *the matter has been treated at somewhat greater length than is usual with such reports, for the reason that it gives an account of an important astronomical constant of a prominent observatory. At the same time it seemed to be desirable and a fit opportunity to exhibit or explain with sufficient detail the methods of observation and reduction, as now practiced in the Survey.

*Difference of telegraphic longitude between San Francisco, Lafayette Park, Cal., and Mount Hamilton station near Lick Observatory, Cal., from exchanges of arbitrary signals in October and November*, 1888.

| | | |
|---|---|---|
| Stations. | San Francisco, observatory in Lafayette Park. | Mount Hamilton, station northeast of Lick Observatory. |
| Observers. | C. H. Sinclair and R. A. Marr. | R. A. Marr and C. H. Sinclair. |
| Instruments. | Coast and Geodetic Survey Transit No. 18, made at the Office in 1887–'88. | Coast and Geodetic Survey Transit No. 19, made at the Office in 1887–'88. |
| | Clear aperture of telescope $7.5^{cm}$ (3 inches). Focal length $94^{cm}$ (37 inches). Magnifying power with diagonal eye-piece 104. | Clear aperture of telescope $7.5^{cm}$ (3 inches). Focal length $94^{cm}$ (37 inches). Magnifying power with diagonal eye-piece 104. |
| | Glass diaphragm of 13 lines, ruled as follows: 5 in middle tally,† 3 in each side tally,† and 2 extreme lines, the last not used. | Glass diaphragm of 13 lines, ruled as follows: 5 in middle tally,† 3 in each side tally,† and 2 extreme lines, the last not used. |
| | One division of striding level No. 7514 equals $2^{mm}$, graduation from the middle; 1 division $= 1''.351$ at temperature $25°.5$ C., as determined by E. Smith, April 11, 1888, at the Survey Office. | One division of striding level No. 7511 equals $2^{mm}$, graduation from the middle; 1 division $= 1''.223$ at temperature $25°.5$ C., as determined by E. Smith, April 11, 1888, at the Survey Office. |
| | Diameter of pivots $2.5^{cm}$ (1 inch). | Diameter of pivots $2.5^{cm}$ (1 inch). |
| | Pivot inequality: Bright-band end smallest, west, $p = +0^s.020 \pm 0^s.001$, from observations made at Yaquina, Oregon, by R. A. Marr, May 30, June 6, 1888, and at Seattle, Wash. by E. Smith, June 12, 14, 15, 16, 18, 1888. | Pivot inequality: bright-band end largest, west, $p = -0^s.006 \pm 0^s.001$, from observations made at Portland, Oregon, by E. Smith, May 14, 16, 17, 18, and June 6, 1888. |
| | Sidereal, break-circuit chronometer Negus, No. 1769; it breaks the even seconds and the fifty-ninth. | Sidereal, break-circuit chronometer, Negus, No. 1771, breaks every even second; also the fifty-ninth. |
| | Cylinder chronograph, Fauth & Co., No. 8; switch-board and telegraph apparatus No. 2.‡ | Cylinder chronograph, Fauth & Co., No. 9; switch-board and telegraphic apparatus No. 4.‡ |

* See Bulletin No. 13, Oct. 7, 1889.
† Line intervals nearly $2^s.5$
‡ Appendix No. 7, Coast and Geodetic Survey Report for 1880.

*Telegraph line and batteries.*—The line from the mountain to San Francisco, via San José, is 65¼ statute miles in length. It is composed of 50 statute miles of No. 8 galvanized wire and of 15 miles of No. 9 wire. Batteries at San Francisco, 150 cells (gravity), and at Mount Hamilton, 10 and 19 cells, before and after exchange of observers.

*Time determinations.*—Two sets of transits were observed at each station every night of exchange of longitude signals, at an interval of about one hour, and the *same stars* were observed at both stations, weather permitting. Three lists of stars had to be prepared, caused by the unusually long period over which the longitude work extended, which was partly due to bad weather and partly to interruption of the line. The star places were taken from the Berliner Jahrbuch with the exception of four stars, whose places depend on the American Ephemeris. Each set is composed of 10 stars, 5 of which are observed with transit axis in position E. (or W.) and 5 with axis reversed in its Y's. Of these 5 stars, 4 are circumzenith or time stars, 2 culminating north and 2 south of the zenith (this is the arrangement aimed at) and one is a circumpolar to control the azimuth.

*Time exchanges.*—The exchanges took place between the two sets of transit observations. They are composed of arbitrary signals, between two and three dozen in number, sent and received at each station. On nights of exchange the chronographs are run at double speed while these signals are passing.*

*Personal equation.*—The differential personal equation between the two observers is eliminated from the resulting longitude by the observers having changed places after one-half of the longitude work was completed (their instruments, however, being of the same pattern, remained at their respective stations).

*Computations and results.*—The first or rough field computation for difference of longitude was made by the observers; the Office computation was made by E. Smith, Assistant, while temporarily attached to the Computing Division, and the partial revision by L. A. Bauer, of the same Division. The sets of transit observations were reduced by the method of least squares, as explained in Appendix No. 14, Coast and Geodetic Survey Report for 1880, Part II. The introduction of weights as a function of a star's declination, the determination of two azimuthal deviations, one for each position of the instrument, and the computation of the probable errors of observation are there fully shown. The chronometer correction $\Delta T$ and its probable error $r$† for the time of exchange $T$ are found by

$$\Delta T = \Delta t_1 + \frac{\Delta t_2 - \Delta t_1}{t_2 - t_1}(T - t_1) \qquad \text{and} \qquad r = \frac{[(t_2 - T)^2 r_1^2 + (T - t_1)^2 r_2^2]^{\frac{1}{2}}}{t_2 - t_1}$$

where $\Delta t_1 \pm r_1$ = chronometer correction and probable error derived from the first set of transits at the time $t_1$ and $\Delta t_2 \pm r_2$ the same quantities respectively for the second set of transits, *i. e.*, after the exchange. The probable error of a time determination from a single star (referred to the equator) is for transit No. 18 at San Francisco $\pm$ 0ˢ.038 and for transit No. 19 at Mt. Hamilton $\pm$ 0ˢ.043; also for Sinclair observer $\pm$0ˢ.046 and for Marr observer $\pm$ 0ˢ.035

* At ordinary speed 1ˢ occupies a length of about 9.2ᵐᵐ, and at double speed nearly 18.2ᵐᵐ

† In formula for $r$ Bulletin No. 13, p. 149, the rectangular brackets should not extend below the horizontal bar.

*Table of resulting difference of longitude.*

| Date, 1888. | Observers at— San Francisco. | Observers at— Mt. Hamilton. | From west or San Francisco signals. | From east or Mount Hamilton signals. | W.—E. | Mean of W. and E. signals. | Correction for personal equation. | Difference of longitude $\Delta\lambda$ | Combination weight. | v. |
|---|---|---|---|---|---|---|---|---|---|---|
| | | | m. s. | m. s. | s. | m. s. | s. | m. s. | | s. |
| Oct. 23 | S. | M. | 3 09.099 | 3 09.076 | 0.023 | 3 09.088 | —0.144 | 3 08.944 | 9 | +0.100 |
| Oct. 30 | S. | M. | .180 | .148 | .032 | .164 | | 09.020 | 9.5 | + .024 |
| Oct. 31 | S. | M. | .138 | .128 | .010 | .133 | | 08.989 | 6 | — .055 |
| Nov. 1 | S. | M. | .263 | .259 | .004 | .261 | | 09.117 | 7 | — .073 |
| Nov. 2 | S. | M. | .221 | .213 | .008 | .217 | | 09.073 | 6 | — .029 |
| Nov. 5 | S. | M. | .248 | .244 | .004 | .246 | | 09.102 | 12 | — .058 |
| | | | | Mean. | 0.014 | 3 09.185 | | | | |
| Nov. 23 | M. | S. | 3 08.899 | 3 08.894 | .005 | 3 08.896 | +0.144 | 09.040 | 2 | + .004 |
| Nov. 24 | M. | S. | .885 | .864 | .021 | .874 | | 09.018 | 2.5 | + .026 |
| Nov. 26 | M. | S. | .953 | .935 | .018 | .944 | | 09.088 | 5 | — .044 |
| Nov. 27 | M. | S. | .910 | .902 | .008 | .906 | | 09.050 | 2 | — .006 |
| Nov. 28 | M. | S. | .875 | .857 | .018 | .866 | | 09.010 | 2 | — .034 |
| | | | | Mean, | 0.014 | 3 08.898 | | 3 09.041 | | |
| | | | | Weighted mean, | | | | 3 09.044 | | |
| | | | | | | | | +0.013 | | |

It will be noticed that the sum of the relative weights [49.5] for difference of longitude before the exchange of observers is about four times greater than the sum of the relative weights [13.5] after the exchange. This undesirable feature is wholly due to the advance of the unfavorable season, as indicated by the fact that the probable error of observation of a single star is fully doubled in the second period as compared with the first.

*Transmission or wave and armature time.*—The column headed W. — E. in the above table contains double the transmission time over 122 kilometres of connecting wire; the half or actual transmission time is, therefore, $0^s.0070 \pm 0^s.0010$, a very small value, showing close adjustment of the quick acting relay.

*Resulting difference of personal equation.*—The difference of the two mean values for longitude for first and second position of observers is double the personal equation effect hence we have

$$S - M = + 0^s.144 \pm 0^s.011$$

where the probable error of the personal equation S — M is found as follows: Suppose the number of days of longitude work equal before and after exchange of observers, we may deduce as many separate values for personal equation as there are such days by comparing $\Delta\lambda_1$ of the first day with $\Delta\lambda_1$ of the first day *after* exchange, next by comparing $\Delta\lambda_{11}$ of the second day with $\Delta\lambda_{11}$ of the second day after exchange, etc., and deducing the probable error from these separate results. In the case of inequality of days as in our table, we substitute the mean value $3^m\ 08^s.898$ to make up for the sixth day wanting after exchange.

The combining weights for the resulting difference of longitude for any night are derived from the expression $\frac{p_1 p_{11}}{p_1 + p_{11}}$, where $p_1$ equals the weight of the time determination at the first station, or $p_1 = r_1^{-2}$ and $p_{11} = r_{11}^{-2}$, a similar quantity at the second station. It generally suffices for these relative weights to express them by one significant figure.

The probable error of the final result for difference of longitude is found by the usual formula with the consideration that two quantities are determined, viz:

$$0.674\sqrt{\frac{[pvv]}{[p](n-2)}}$$

We adopt the result, $3^m\ 09^s.044 \pm 0^s.013$, as the difference of longitude between the respective transits.

*Location of stations.*—At San Francisco the transit was mounted in Assistant G. Davidson's astronomical observatory in Lafayette Park on the *eastern* or small transit pier. This small pier is 5 ft. 2 in. (1.575 m.) east of the old transit pier (of 1881), which was used in the preceding year. Reduction to Lafayette Park Observatory, or to western (1881) transit pier, $0''.0644$ or $0^s.0043$

At Mt. Hamilton the transit was mounted about a quarter of a mile to the eastward of the Lick Observatory, on a small knoll which is south of the main road running along the ridge. This site was selected by the Director of the Lick Observatory and accepted by the C. and G. Survey observer. Two piers were built of brick and cement, resting on solid rock. The transit was mounted on the *west* pier. The other pier, used for latitude work, is 6 ft. 7½ in. (middle to middle), or 2.019 m. east of it. In order to connect this astronomical station of 1888 with the geodetic station or the center of the small dome (northern) of the Lick Observatory, and with the Fauth transit in the transit-house of the Lick Observatory, which defines its meridian of reference, a base-line was measured east of the main building, and these and other points were connected by a local triangulation. This includes the position of the magnetic observatory (C. and G. Survey) and the azimuth mark of the transit-house. The resulting differences of longitude are as follows:

Coast and Geodetic Survey astronomical longitude station of 1888 on Mt. Hamilton, *east* of the Lick Observatory meridian of reference (transit-house), $16''.281$ or $1^s.085$; and *east* of the Lick Observatory, small or northern dome (center), $17''.202$ or $1^s.147$

Referring our result for difference of longitude to the meridians of reference at the two stations, we have:

$\Delta\lambda$ San Francisco, Lafayette Park meridian (western, 1881, transit) and Mt. Hamilton, Coast and Geodetic Survey telegraphic longitude station (1888), $3^m\ 09^s.048$

$\Delta\lambda$ San Francisco, as above and Lick Observatory meridian of reference, transit-house, $3^m\ 07^s.963$

$\Delta\lambda$ San Francisco, as above and Lick Observatory, center of small dome, C. and G. Survey geodetic station, $3^m\ 07^s.901$

The probable error is $\pm 0^s.013$, the same for all.

Comparing the first of these values of $\Delta\lambda$ with the geodetic difference of longitude, we obtain the differential longitudinal deflection of the verticals at the two stations, viz: Astronomical difference, $3^m\ 09^s.048$ or $47'\ 15''.72$ minus geodetic difference $47'\ 22''.67 = -6''.95$ or $= -0^s.463$ How much of this may be due to one or to the other station can not be decided at present on account of the still insufficiently developed field work.*

| | | |
|---|---|---|
| Latest result † for telegraphic longitude of Lafayette Park, transit of 1881, | $\lambda = 8^h\ 09^m\ 42^s.77$ or 122°25′41″.55 | *W. from Gr.* |
| Hence, λ of Mt. Hamilton C. and G. Survey long. station, transit of 1888, | 8 06 33.722 or 121 38 25.83 | " |
| And λ of Lick Observatory, transit-house meridian, with an estimated probable error of $\pm 0^s.1$ or $1''.5$ | 8 06 34.807 or 121 38 42.10 | " |

* Assistant Sinclair states that comparisons were made every night before and after the longitude work, with clocks regulated at the Lick Observatory, and depending on star observations of the Coast and Geodetic Survey list. No direct use can be made of these comparisons, since the Lick observer has not compared his personal equation with that of our observers. Whether or not there be a sensible differential deflection of the verticals between the two stations on the mountain, very nearly ¼ of a mile (0.40 km.) apart, can only be ascertained by actual observations.

† A new general adjustment of the longitudes will be made as soon as the observations for the triple check of the Pacific coast stations are completed.

# APPENDIX No. 9—1889.

## DESCRIPTION OF TWO NEW PORTABLE TRANSIT INSTRUMENTS FOR LONGITUDE WORK.

Constructed at the Office of the Survey from designs by EDWIN SMITH, Assistant.

### PREFATORY NOTE.

The following description of two new portable transit instruments, specially designed for use by the telegraphic longitude parties, and constructed at the instrument shop of the Survey Office, was prepared by the undersigned and submitted by him under date of June 7, 1889.

EDWIN SMITH.
*Assistant, Coast and Geodetic Survey.*

Up to and including the year 1887 the transits Nos. 3, 4, 5, 6, and 8, made by Troughton & Simms, of London, were used in the primary longitude work of the Survey in observing time.

These transits are all very much alike, except No. 8, which has a very much heavier iron frame and an inferior reversing apparatus. All these instruments have telescopes with objectives of 2¾ inches (7 cm.) aperture and a focal length of about 46 inches (117 cm.). Various diagonal eye-pieces have been used with them, and give powers of 80 to 120.

Originally only No. 8 had reversing apparatus, but such an apparatus was afterward added to all of them, with great improvements over that of No. 8. In 1880–'81 changes were made in some of these instruments by which they were made available for determining latitude by the Talcott method. One of these transits as thus changed is shown in plate No. 62 of Appendix 14—1880.

For determinations of latitude these instruments were not a success, the micrometers and levels being unequal to modern requirements of accuracy and the eye pieces not being aplanatic; but for observations of time the records of the Survey show that they have given good results. For some years, however, they have been regarded as unsuited to improved field methods, and their weight, packed for transportation, between 525 and 700 pounds (238 to 318 kgm.), has been a large item in the expense of the work.

During the summer of 1887 the writer suggested to the Superintendent that new transits be made at the Office for the longitude party. This met with his approval, and in response to his request the writer at once sent from the field rough plans and specifications for two new transits. On his return to the Office from the field in the autumn of the same year the matter was thoroughly discussed, and a plan finally adopted for two transits to be known as Nos. 18 and 19, and to be used exclusively for the observations of transits of stars in longitude determinations.

The illustration (page 215) shows two views of these instruments, in which the principal details may be seen.

The working drawings for these transits were made entirely by Mr. E. G. Fischer, the chief mechanician of the Survey, and to him is due the credit for working out all the details of the mechanical construction. All the patterns were made and all the work except the castings was done

in the Survey Office shop in charge of Assistant A. Braid, and under the immediate direction of Mr. Fischer, who himself did the final work on the pivots, as well as on many other details. The objectives were made by John Clacey, of Boston, and the eye-pieces by Kahler, of Washington.

### THE INSTRUMENTS.

There is a triangular-shaped sub-base of iron to these transits (see illustration), which is to be firmly cemented to a brick or stone pier approximately in position as to level and azimuth. Upon this sub-base the instrument proper rests at three points. One point of support is the leveling-screw, the foot of which rests in a conical hole in the sub-base. The other two points of support terminate in spherical surfaces and rest upon two planes on the sub-base. There are two opposing screws attached to the sub-base, which abut against a tongue cast on the frame. These two screws are turned at the same time by a double-adjusting bar, and turn the whole frame in azimuth about the leveling-screw as a centre. There is a graduated head to one of these screws by which the instrument may at once be set in the meridian when the azimuth error is known.

There are three binding screws near the three points of support, which may be used to clamp the frame to the sub-base if thought necessary.

The brass V's have plane surfaces at right angles, and the pivots bear not on two points but on two lines. These V's are firmly fixed to the iron frame, and their relative position remains unchanged in any adjustment of the instrument.

The reversing apparatus is the same in principle as in the old transits, but is entirely above the surface of the pier.

The telescopes have objectives of 3 inches (7.6 cm.) clear aperture, and focal length of about 37 inches (94 cm.). The diagonal eye-pieces are made after the formula of Airy, and have an equivalent focal length of $\frac{35}{100}$ inch (8.9 mm.).

With these eye-pieces the telescopes have a power of about 104. Each transit has also a straight Ramsden eye-piece with equivalent focal length of 1 inch (2.5 cm.). The length of the axis, exclusive of pivots, is 18 inches (45.7 cm.). The length of each pivot is $1\frac{1}{8}$ inches (2.9 cm.), and its diameter is 1 inch (2.5 cm.). The pivots are of bell metal. They are remarkably regular and very nearly equal in diameter, the correction to the level readings being only $.020^s$ in one and $.000^s$ in the other instrument. Both pivots are perforated; both are closed with brass caps, in one of which is a piece of glass to admit the light from the lamp to illuminate the diaphragm. This illumination is by a very small mirror in the centre of the axis. Attached to the frame by each V is a disk with four holes filled with plain, ground, red, and green glass, by which the illumination may be modified at the pleasure of the observer. The lamps are placed 10 inches (25.4 cm.) from the ends of the axis. The question of illumination by electricity was considered, but was found as yet unadvisable for field work.

The telescope and axis is black, and on one end of the axis is a bright band by which the position of the axis is designated.

There is no clamp on the axis; the telescope being nicely balanced, none is needed in longitude work. The diaphragm is of glass, upon which lines are ruled as follows:

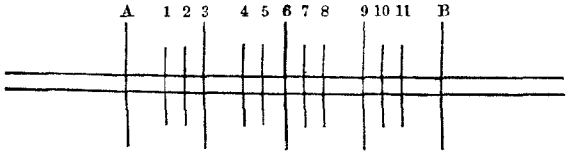


The short intervals are nearly $2\frac{1}{2}$ seconds, and the long intervals 5 seconds of time on the equator.

If it is desired to observe by eye and ear, the five lines A, 3, 6, 9, B are to be used. In observing on a chronograph, lines 1 to 11 are to be used.

All the adjustments of this diaphragm are very simple, and the screws by which they are made are so placed that they can not be turned by accident. There is a clamp to hold the sidereal focus.

The setting circles are 4 inches in diameter divided to 20′, and read to minutes by verniers They set to zenith distances.

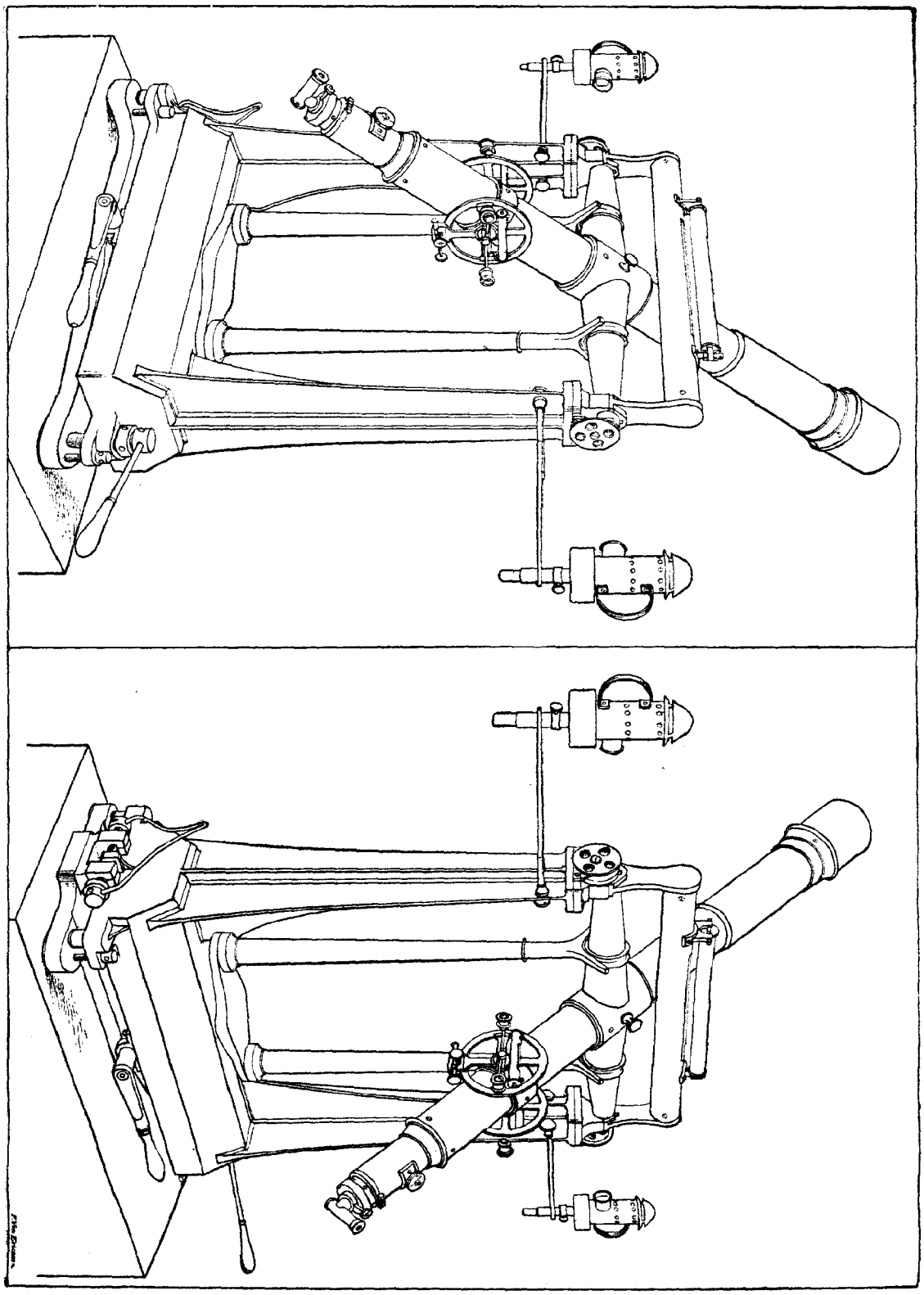

NEW PORTABLE TRANSIT INSTRUMENT (1888) FOR LONGITUDE WORK

The level Y's are as nearly like those attached to the stand as possible. The level scales are on the glass tubes and read from the centre east and west. One division is equal to $2^{mm}$ in No. 18 = 1″.351 at 25°.5 C., and in No. 19 = 1″.223 at 25°.5 C. They have chambers by which the length of the bubbles may be controlled.

The plates give so good an idea of these instruments that a more detailed description is deemed unnecessary. The two instruments are as nearly alike as it was possible to make them. In designing them it was kept in mind that they were to be used exclusively for the observations of transits of stars in longitude determinations, and nothing was added to them that is not absolutely necessary for this sole purpose. They are certainly the most complete and best constructed transits the Survey has ever had for longitude. They have about the same power as the old ones, but owing to the different dimensions and better mechanical construction, each instrument weighs, when packed in two boxes for transportation, only about 350 pounds (or 159 kgm.). The sub-base, iron frame, and reversing apparatus are packed in one strong box; all other parts of the instruments are packed in two boxes, one inside the other, the outer one being padded.

They have now been in use for about a year by three observers, and very satisfactory results have been obtained.

# APPENDIX No. 10.—1889.

## REPORT ON THE MEASUREMENT OF THE LOS ANGELES BASE LINE, LOS ANGELES AND ORANGE COUNTIES, CALIFORNIA.

By GEORGE DAVIDSON, Assistant.

SUB-OFFICE, U. S. COAST AND GEODETIC SURVEY,
*San Francisco, Cal., August* 23, 1889.

SIR: In 1852, under instructions from Superintendent Bache, I made a reconnaissance for a base line on the Los Angeles plains. This base line was for the development of the triangulation to embrace the shores and islands of the San Pedro and Santa Barbara Channels, and for the triangulation hence to San Diego.

The location was made about eleven miles northward from San Pedro. The line itself was measured in the spring of 1853 by the very unsatisfactory bars (four-metre iron Nos. 1 and 2) of a secondary base apparatus.

The ends were never more effectively marked than I left them, when ordered for special work in the channels between Vancouver Island and the mainland in June, 1853.

In 1881 I was instructed to make search for the marks at the ends of the base line. The easterly one was found intact; the westerly one required some time to find, because it had been maliciously disturbed, and was found under the surface, thrown over into a partial hole that had been dug to receive it, and then the surface of the ground made level.

I set the monument up, and measured the assumed base line twice with one hundred-metre wire.

I reported the condition of the ends; and, moreover, I recommended that the possibility of obtaining a larger base line, and one better related to the larger triangulation, proposed to the southeast and to the northwest, should be examined. I felt satisfied the country was level enough towards Anaheim, but it might be that the land had come under cultivation and was improved. The surrounding mountains and hills were favorable for a good geometric development from a properly located base line in this vicinity.

In 1886 I received instructions to have the necessary reconnaissance and examination made; and Assistant Lawson was detailed for that work with Assistant Dickins and Sub-Assistant Morse. At the same time I went to the Columbia River for azimuth work. The party found that a railroad had been built directly through the plains, and the country had developed so much that the improvements and groves of trees compelled a selection within a limited region.

After an exhaustive examination of the country, and a survey of the topography of the railroad from Norwalk to Anaheim, a line was selected. The topography of this line was executed by Assistant Dickins and Sub-Assistant Morse. Parts of the line were so densely covered with high, wild mustard that the line had to be opened for miles.

The telemeter measurement of the base line made it 17,300 metres. The southeast end was near Kellogg avenue, that runs south from the north side of Anaheim on flat, sandy soil, then covered with hog-pens, etc. The northwest end was on a slight ridge lying nearly east and west, and one mile east of the town of Norwalk. It lay about N. 31° W. compass. In no other direction or position,

except much farther to the southward, could such favorable conditions be found, both for coming off on the triangulation and for openness of country. In May, instructions were received to discontinue work after June 30.

In 1888 I received instructions to be ready to measure the base line, and Sub-Assistant Morse was sent from San Francisco to examine whether the line was yet open, and reported that it was. Pending the passing of the appropriation bills, I had the measuring bars of the new primary base apparatus * overhauled and such defects remedied as were practicable, and had them compared with the field standard bar No. 2 for three days and three nights at the San Francisco latitude station at Lafayette Park.

On the 4th of October I received telegraphic instructions to measure the base line. The party was immediately organized, and arrived under the charge of Assistant Lawson, at Camp Colonna, near middle base, October 16, 1888.

### GENERAL LOCATION OF THE LOS ANGELES BASE LINE.

When the line was located it was in Los Angeles County, and as the extensive plains were generally known by that name, it was applied to the base line. By legislative enactment the boundary of Los Angeles County was changed and a new county of Orange created from the south and east part of Los Angeles County. The limits of this county towards Los Angeles are as stated in the foot-note.†

The base line is therefore partly in Los Angeles County and partly in Orange County, and as its direction is nearly N. 36° W. and S. 36° E., it is not parallel or referable to any road, nor to the two railroads which it crosses. It lies about ten miles from the shore of San Pedro Bay and is roughly parallel therewith.

The southeast end of the line lies in property owned by S. W. Story, in "Pointdexter and Vicker's subdivision." It is in the northeast quarter of the southeast quarter of section 29, T. 4 S., R. 10 W. and about one hundred yards west of the Kellogg avenue. It is one and two thirds miles south, along Kellogg avenue from the southwestern part of the town of Anaheim.

The northwest end of the line lies in property belonging, at the time of the measurement, to W. N. Abbott, of Monrovia, Cal.

So far as I could ascertain it is in the southeast quarter of the southwest quarter of section 3, T. 3. S., R. 11 W. It is reached from the town of Norwalk, following a road which leaves the town for a third of a mile to the northeastward, and then continuing across a road one mile to the eastward, crossing the Santa Fé Railroad, where it reaches the southern edge of the ridge, and continues eastward about four hundred yards.

There is a general but very slight fall of the land from the southeast base to the railroad crossing of the Coyote Creek, where the railroad engineer gives me a height of fifty-nine feet above datum-plane. Thence the ground rises very slightly to the crossing of the Santa Fé Railroad and continues to within three hundred metres of the northwest station, when the rise commences and averages nearly three degrees.

I think there will be no buildings erected immediately on the line, but there is a grove of eucalyptus trees crossing it at Buena Park; it is a young grove growing very rapidly, and we had to remove twenty-five trees to make the measurement through it. Of course it is possible that buildings may go up on those parts of the line where grazing is good and the land of good quality.

---

* See appendices Nos. 7 and 8, Report for 1882.

† STATUTES OF CALIFORNIA, 1889.

CHAPTER CX.—An act to create the county of Orange, to define the boundaries thereof * * * Approved March 11, 1889.

SECTION 2.—*Boundary.* The boundaries of Orange County shall be as follows:

*Beginning* at a point in the Pacific Ocean, three miles southwest of the centre of the mouth of Coyote Creek, *proceeding* up said creek in a northeasterly direction until it intersects the township line between township three south of ranges ten and eleven west; *thence* north on said township line to the northwest corner of section six, township three south of range ten west; *thence* east on said township line until it intersects the boundary line between San Bernardino and Los Angeles Counties; *thence* along said boundary southeasterly until it intersects the boundary line of San Diego County, *thence* along said line southwest until it reaches the Pacific coast; *thence* in the same direction to a point three miles in the Pacific Ocean; *thence* in northwesterly line parallel to said coast to the point of beginning.

### FINAL LOCATION OF THE LINE.

I examined the line and fixed the two ends on the best available spots for observations. At the southeast base the eye has to be eleven feet above the surface of the ground before the ridge at northwest base is seen over a slight rise three or four miles from the southeast base. I examined the line in its general features and found that much work would have to be done in building wooden structures on which to cross water courses, that would be filled after the rains had commenced. The ground itself is generally a plain, with a gentle slope towards the Coyote Creek, from the southeast and from the northwest bases. Over this broad plain are slight ridges of only a few feet elevation, that act as lines for throwing the drainage to slight depressions, which mark old water courses and which generally reach the Coyote Creek. In some places there were moderately large areas of depression, without drainage; in such cases the rain-water was retained a long while by the clayey soil. At the Southern Pacific Railroad crossing, the Coyote Creek had cut deep sloughs, and the lines of drainage along the railroad were sharp depressions six and eight feet deep. These could hardly be avoided by any reasonable change of the ends of the line.

I examined the general locality of each end of the base which had been selected by Assistant Lawson in 1886; the temporary marks had all been destroyed, and I made a fresh choice, differing in each case but little from the old line, but somewhat lengthening it, and set up temporary signals by which to adjust the alignment. The northern end of the line now passes diagonally over the Santa Fé Railroad, which has been built since the examination of 1886, but there is little difficulty here.

The line passes through cultivated fields, some of which were wire-fenced so that eight gates had to be provided. Much of the ground had never been touched by the plow. Over parts of the natural ground were heavy tussocks of coarse grasses, (not recognized by name, as the fructification parts were gone), which required heavy work with mattocks and hoes to remove.

As in the case of the Yolo base line, no attempt was made to grade the line or even to surface it, except in half a dozen places, where sand or clay hummocks were cut through; so that the greater part of the line was in a state of nature, except the clearing out of the tussocks and coarse grasses. The work of cutting out these tussocks and coarse grasses was slow, because the adobe soil was as hard as clay can bake in a long season of hot, dry weather.

The work of clearing the line was assigned to Messrs. Morse and Nelson as occasion called for; the building of all the trestle-work for crossing water-ways and approaches to the Southern Pacific Railroad was assigned to Mr. Westdahl. Mr. Morse built the brick piers, for comparison of the bars with the field standard, at the two ends of the base and at Camp Colonna. The general direction of the party was assigned to Assistant Lawson, with charge over the crossing of the water-ways, bridges, etc.

The aligning of the base was made by establishing the Davidson meridian instrument No. 1 on a slight rise about four miles from the southeast base station, because the haziness and unsteadiness of the atmosphere almost forbade observations for alignment from end to end. Even at this middle station it was possible to get observations only a very short time after sunrise.

The base was then aligned by Mr. Morse and myself, and two-inch aligning poles were placed about every half mile or more according to circumstances.

### BUILDING THE BASE PIERS.

I constructed the base piers to the surface exactly as I had done for the Yolo base line, and the subsequent witness marks were similar.

At the "southeast base station" the soil is a very coarse, whitish sand, lying in a ridge two or three feet above the general level and about one hundred and thirty feet wide. As the observing pier at this station will require a height of thirty to thirty-five feet, I adopted the same proportions as that at the Yolo base.

The subsurface foundation is seventy-two inches square at the bottom and is sixty inches below the surface. It is sloped in at the sides to fifty-four inches square. In this mass of brick and cement is built a cube of granite twenty-six inches square, whose upper surface is flush with the surface of the ground. Two sides of the pier are closely parallel to the direction of the base.

In this upper surface is the marking of the end of the base, to be described.

Below this foundation pier there is placed a granite block, squared on top and three feet deep. The body is irregularly squared. The top of this granite block is three or four inches below the bottom of the upper mass of the pier and it carries a subsurface mark, to be described.

The piers of the northwest base station were built almost identically as those at the southeast end. The soil here is a reddish clay, that works very easily when wet, but had to be picked when we opened the space for the pier. The granite block beneath the pier was fixed as at the southeast base.

When the soil was being replaced around each subsurface pier one or two barrels of charcoal were mixed with the soil in tamping.

### MARKING THE BASE STATIONS.

Four four-inch stubs, two feet long, were driven in the soil around the base station, not yet marked; two were in line, or very nearly, with the base line, and two at right angles to it; each was about seven feet from the station.

Upon the leveled edge of a broad, wooden straight-edge there was laid off a length of seven feet each way from the center of a shallow groove, which admitted half the plumb.bob line when hanging. The seven feet marks were fixed upon each pair of tacks and marked so that the station mark was taken at the intersection.

Then the hole for the pier was dug over five feet deep, and in the center of this a deeper hole to receive the granite block to carry the subsurface station mark.

The round, copper bolts to mark the stations and for reference and recovery are five inches long, five-eighths of an inch thick, with flat, spherical heads that average one and five-eighths of an inch in diameter. Into these heads is driven a silver wire, about one-tenth of an inch in diameter and half an inch long. The tops are then filed, worked on a fine whetstone and burnished ready to receive the station mark.

The bolts were fixed in the stones by pouring melted sulphur around them.

The first marking of the station was the subsurface granite block below the main pier. The mark was made by hammering a No. 5 needle into, or near, the center of the silver wire, in the flat, spherical head of the copper bolt; the raised edge was then cut down with a fine stone, the needle again forced in, and the raised edge again cut down. This was repeated several times and the top smoothed by a rubber until the mark was satisfactory. This mark was quite circular, and appeared black in the surface of the silver; its average diameter was about one-half of a half-millimetre The center could easily be read to one-tenth the diameter with very slight magnifying power.

The copper bolt in the lower granite block was covered with a hemispherical, chemical evaporating glass dish, which was cemented to the granite.

Illustration No. 20 shows the appearance of the lower block and marking:

After the base of the subsurface pier had set two days the twenty-six-inch granite cube was gotten ready for placement. To facilitate placing it closely in proper position two sectors were fixed at distances of twenty feet from the station point, which was found by the straight-edge, one sector was in line, and the other at right angles. Lest there might be any temporary derangement, a range-stake was set for each instrument at two hundred yards distant. The cube of granite was then placed closely in position; and then the copper bolt was sulphured into the block. The point of a fine needle was then placed on the silver pin, so that it was bisected by the vertical thread of each sector. Made the needle-mark, and ground the surface as already described. The hole marking the station is round and about two-fifths of a half-millimetre in diameter, but it might be smaller. It is not in the center of the silver pin, but nearer the northwest part of the circumference. At the close of all the operations this mark was covered by a heavy glass cover, cemented on the granite, and three courses of brick laid in cement over the top of the granite cube and mark. (Size 2½ bricks.)

# Markings of Ends

of

# Primary Base.

Los Angeles, Cal.

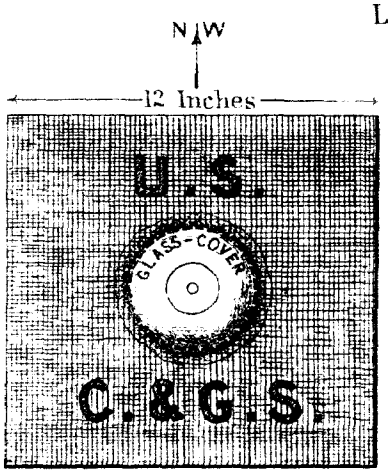


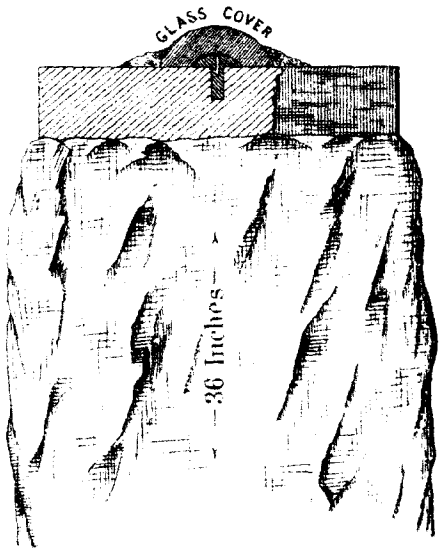


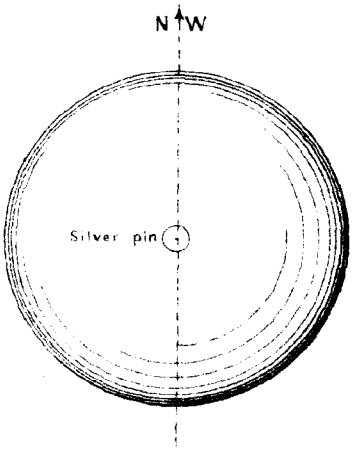


Copper Bolt Head

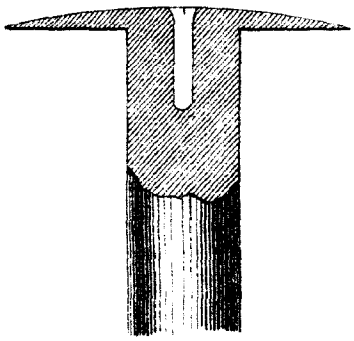

THE REFERENCE OR WITNESS MARKS FOR THE SOUTHEAST BASE STATION.

The two stations at the ends of the base were marked in the same general manner, but the markings of the southeast station are here described as an example.

To provide means for recovering the station or for checking any displacement of the surface mark after the high instrument pier is built, I placed two subsurface marks on the line of the base and two at right angles to the west, as shown by the sketch.

The twelve-inch theodolite No. 131 was mounted over the station and directed towards the northwest base station, but the signal could not be distinguished, and took the range of base on the house beyond, which itself was somewhat indistinct.

A corn crib prevented the placing of one pair of witness marks to the northeast, so an angle of ninety degrees was laid off to the southwestward. Dug a hole three and two-tenths feet deep; laid two courses of brick in cement; then placed a twelve-inch granite cube therein and centered the silver pin in the copper bolt closely at one hundred feet. When the cube was "set" a tripod with plumb bob was placed in the line of ninety degrees from the direction of the base line and a dot was made in the silver with a fine needle, as in the other markings. The dot is round and has a diameter of about one-fourth of a millimetre. The horizontal distance of this dot from the station, measured by a steel tape of fifty feet, is 100.003 feet. Then finished the brick-work around the cube, whose surface is eighteen inches below the surface of the ground and just at the edge of the slight fall from the ridge of two and a half or three feet. On the head of this copper bolt is marked with a steel point, "S. W. Witness: 100.003 feet."

The witness mark on the line of the base is at a horizontal distance of 100.100 feet from the station, and twenty-two inches below the surface. In the top of this bolt there is marked by a steel point, "S. W. Witness: 100 feet."

Then the theodolite was removed from the southeast base station and carefully centered over the southwest witness mark and directed to a fine needle in the station mark. On this line at ten feet from the station a hole was dug and the masonry laid for the one-foot cube, which was allowed to "set." A tripod with fine line was set up for aligning the witness mark and for distance. The dot in the silver pin was made by a fine needle point; it is one-third of a millimetre in diameter, and lies at 10.017 feet from the station and in the line to the southwest 100.003 feet witness mark. On the copper bolt head there has been marked by a sharp steel point, "S. W. Witness: 10.02 feet." The top of the block is about twenty inches below the surface of the ground.

The base line inner witness cube was placed in a similar manner at a horizontal distance of 10.03 feet from the station. The top of the copper bolt was marked by a sharp steel point, "N W. Witness: 10 feet." The top of the cube is eighteen and a half inches below the surface of the ground.

Before the earth was filled over the witness marks a strong glass was inverted over each and cemented upon the granite.

The placing of the witness marks at the southeast base station was directed by myself; those at the northwest base station by Sub-Assistant Morse.

THE BASE LINE LEVELED AND PRELIMINARILY MEASURED WITH ONE HUNDRED METRE WIRE.

In order to control the number of bars in the final measurement of the base, and at the same time give turning points for the leveling observations, the base line was measured by Aid John Nelson and Draughtsman Ferdinand Westdahl.

To establish a proper standard for the wire, I measured with the bars a distance of one hundred metres at the camp. The measuring wire was English steel nearly No. 10 American gauge. It was wound upon a large reel of thirty inches diameter. Upon each end there was fixed a double sleeve of brass. The inner one was soldered to the wire; the outer one with a square edge screwed over the inner one and was moved to any required position and soldered. In fixing the last sleeves the wire was strained by a seventy-five-pound pull through the spring balance, and the final adjustment of the sleeve made when it was soldered. The temperature of the wire was noted.

The aligning was done by the eye and without instrument. At every one hundred metres a stub was driven in the ground and with copper tack in the head; the tack was closely marked.

The measurement followed all the irregularities of the ground. During the measurement the wire was reeled up twice.

There were made the following measures:

| | M |
|---|---|
| 175 measures, 100 metres each | 17,500.00 |
| Less 17.95 feet at northwest base | 5.47 |
| Length of base not reduced for temperature | 17,494.53 |

The leveling of the base was done only once by Aid John Nelson. The instrument used was the Stackpole level 1430, which has been used in leveling between Martinez East and Mount Diablo, and on the Yolo base line. The rod is one of the two used on the Martinez-Diablo work and on the Yolo base line. On the Yolo work the rod had been compared with a standard yard and found practically correct.

The levelings were made from the southeast base station and crossed the Southern Pacific Railroad near the Coyote Slough, where the chief engineer of the railroad has a leveling.

The measurement gave the difference for the northwest base station above the southeast base station, 19.950 feet.

The greatest difference in the line was in the approaches to Coyote Creek, —52.438 feet.

The top of the iron rail over Coyote Creek railroad bridge was below the southeast base station, —45.203 feet.

From the railroad company this part of the rail is above their datum-plane + 59.000 feet, whence the northwest station is above the datum-plane 124 feet and the southeast station above the same plane 104 feet.

We do not yet know the exact relati on of this plane to the sea-level.

It is proposed to level the base line again and to connect the northwest base station with the Santa Fé Railroad levelings at Santa Fé Springs, and with the Southern Pacific at Norwalk, and finally to connect by a direct line of levels with the sea.

### HALF-KILOMETRE MARKS AND TEMPORARY MARKS ON THE BASE LINE.

The Yolo base line was marked by kilometre stones and also by stones placed at the fences.

I determined to mark the present base line at every half-kilometre, wherever it was practicable. For this purpose thirty-four granite blocks were obtained with a square head of eight inches and an irregular body of thirty-six inches in length. Into each was sulphured the usual five-inch copper bolt with flattened head and silver pin.

At the end of each one hundred bars as indicated, without correction or reduction of any kind, the transfer was made by sector from the end of the forward base bar to the silver pin. The mark was the usual fine needle-point mark about one fourth to one-third of a millimetre in diameter. When the mark had been made, the final relation of the mark with the end of the bar was made by measuring with the sector and a millimetre scale the difference between them.

In some cases the soil was in such a condition from heavy rains, and in one case from quicksand, that the five hundred metre location could not be safely made. So the granite block was placed at the nearest practicable position. Most of these blocks were placed from twelve to eighteen inches below the surface of the soil; but in some cases they are above the soil, especially along the north part of the base line and over the alkali plain.

The transfers were made by myself or Mr. Morse, with Mr. Nelson at the sector, which was set up at a distance of about twenty feet at right angles to the line of the base at the end of the bar.

The temporary marks were the same as those used in the Yolo measurement. A granite block twelve by twelve by four inches has a five-eighths inch copper bolt projecting two inches above the surface, with its end wedge-shaped in the line of the base. On one of the wedge faces was drawn a fine line about one-tenth of a millimetre wide. The top of this line was the point of reference. The mark was to be fixed in position whenever a stop of more than ten minutes was to be made for any purpose and for closing work at night.

A hole was scraped in the soil to the depth of three or four inches, and the block placed in it. The edge of the wedge was placed in the line of the bar and the fine reference line approximately located under the end of the bar. Then the earth was tamped around the block.

The following operation was then followed as in all the other transfers to station marks and to half-kilometre stones:

An ivory scale, divided to 0.5 millimetre that had been tested at the Office, was placed on the slight groove on the edge of the wedge, and a given division—in this case the seven centimetre—was made coincident with the reference line, under a magnifier; the scale was made level and in the line of the base. Then, with the sector, the end of the bar was transferred to the scale in the following manner: Transit axis of sector leveled and telescope pointed to the end of the bar, then to the ivory scale, and the reading recorded; telescope reversed in the V's, transit axis leveled, point to the end of bar and read the ivory scale; then reverse the instrument, level transit axis, point to end of bar and read the ivory scale; reverse telescope in the V's, transit axis leveled, point to end of bar and read the ivory scale. At each pointing the coincidence of 7.00 line and the reference line tested.

The sector had a delicate transit axis level; it was mounted upon a very short-legged tripod, so that the focus of the telescope was equally good on the bar and on the ivory scale. It was generally at a distance of twenty feet from the bar and at right angles thereto. The magnifying power of the telescope was twenty diameters. The collimation was usually very small. The spider-thread was very fine and the readings made to the tenth of a millimetre.

Three of these granite blocks were in use, so that no block was removed until another, or a half-kilometre block ahead had been established; at such places as railroads and bridge crossings two and sometimes three blocks were down at one time.

The sector was always used on side of the bar in each measurement.

### THE MOVABLE COVER FOR THE BASE APPARATUS.

The movable cover or tent under which all the measures were made was the one used on the Yolo base line, without change. It was used to protect the bars from the direct action of the sun, from showers, from the driving dust, and from the fluctuating force of the wind; and to secure the bars from injury at night and during days of storm. In crossing one of the fields, plowed for the first time, where we had to remove the great matted clods for space to lay the foot-plates, we encountered a "sand storm," where the wind blew almost squarely on the four hundred and fifty square feet of canvas with such fury and in gusts that it required the whole force to hold down the movable cover, lest it should be blown over the bars. The flying dust was frightful, and it required two hours to measure forty bars. It was estimated that the wind blew thirty-five miles per hour in the gusts; when one of the bars happened to project outside the cover it was blown sideways on the tripod support.

It is not necessary to describe this movable tent, because the details have been already given in the account of the Yolo base. It was fifty feet long, nine feet high, and twelve feet broad, and was mounted on four wheels. It was always pulled and pushed by four men over ordinary ground, but through the mud it required the assistance of all who could be spared from the bars.

At night the four wheels were removed, and the long, side pieces rested on the ground; the ends were closed by canvas curtains and secured so as to afford entire protection from wind, rain, and stray animals.

When we were at work the "standard field bar No. 2" was secured to the rail on the shady side of the cover. On the Yolo base this cover was known as the "Yolo buggy;" here it was designated the "Caravan."

### THE ORGANIZATION AND MOVEMENT OF THE PARTY.

The readiest way of understanding the movements of the party at work in the field is by an examination of the annexed plan (illustration No. 23) which differs slightly from that of the Yolo base measurement. The plan exhibits the bars and tripods or trestles in position, and the traces of the men's forward movements.

As we actually reached a measurement of four hundred bars in one day, one hundred bars in ninety-six minutes, and frequently several consecutive bars in forty-five seconds each, it will be conceded that the whole of the movement of the eighteen officers and men must have had the regularity of machinery. Every officer and every man had a specific duty assigned to him, and no deviation was allowed therefrom. Ten of the twelve men had not handled the apparatus on the Yolo base, and to all the officers the actual working was novel except to myself.

The general forward movement really began at the command "Break," when the rear bar was drawn backward with a slight back pressure, from myself. This bar was then lifted and carried forward on the men's left shoulders and placed in the two trestles awaiting it. Mr. Morse at the forward trestle and myself at the rear one received the bar.

So soon as the bar was off the trestles each trestle man relieved the tightening of two of the legs, picked up his tripod, and moved forward; each plate man gathered the three plates and hurriedly moved to the front, where Mr. Westdahl had a frame at the proper distance from the bar, at the angles of which frame the plates were dropped for the rear and forward trestles. Then the tripods were placed on the plates, accurately distanced, aligned, leveled, and clasped. No. 12 ordered the "caravan" forward so soon as the rear plates were lifted. As the plate men and the trestle men were moving rapidly to the front, Mr. Nelson guarded the legs of the rear trestle of the bar remaining in position.

The details of raising and lowering the after end of the forward bar, aligning, making approximate contact, reading the Borda and mercurial thermometers, reading the sector, and then when all hands were off the bar, making the final coincidence under a magnifier, fell into their regular and necessary sequence.

It was the earnest desire of each officer to guard against errors of reading scales, thermometers, and the sector; the duty of the recorder to announce any seeming deviation from regularity of change, and of the chief to call for any re-examination if he suspected mistakes.

The form of record was changed from that of the Yolo base, so that the readings upon each bar were consecutive.

The sector readings for each bar for the inclination were checked by a second observer, who first announced the angle and the first observer verified it, and at the same time made a record to check the recorder.

The recorder very soon got used to the scales and thermometers which each observer was reading, and as those on each bar and on the two bars differed slightly he saw at a glance whether any misreading had been made.

It will be noticed that the bars were carried forward on one side of the line of trestles; officers, plate men and trestle men remaining on the other, and no one was permitted to break the rule.

At the close of the day the bars and the standard were put in position on the comparing beam, resting on two strong trestles, for the next morning's comparison, and lightly covered with canvas against rain beating through the light cover. At night the watchman had a hammock swung under the "horse" that connected the beams at the wheels.

Before the measurement of the day was begun the bars were compared in two series with the field standard, in the condition in which they had remained over night; then the sectors were examined by the leveling instrument for the determination of the zero of the inclination arc.

The after end of the rear bar was then plumbed over the previous night's mark, and moved in line and its height measured; the forward bar was moved into position, the temperature, etc., of both bars noted, final contact made, and the command "break" announced the forward movement of the measurement.

The lunch and night marks, or any temporary marks, were covered by a box and left intact until another mark had been secured.

It will be seen by the plan that the following personnel was absolutely requisite on the ground; there was no extra force to make duplicate records, or to make any reductions:

Chief of Party George Davidson; Assistant James S. Lawson; Sub-Assistant Fremont Morse; Aid John Nelson; Draughtsman Ferdinand Westdahl; Recorder and Clerk Frank W. Edmonds;

# LOS ANGELES BASE LINE

## PLAN SHOWING THE PARTY AT WORK

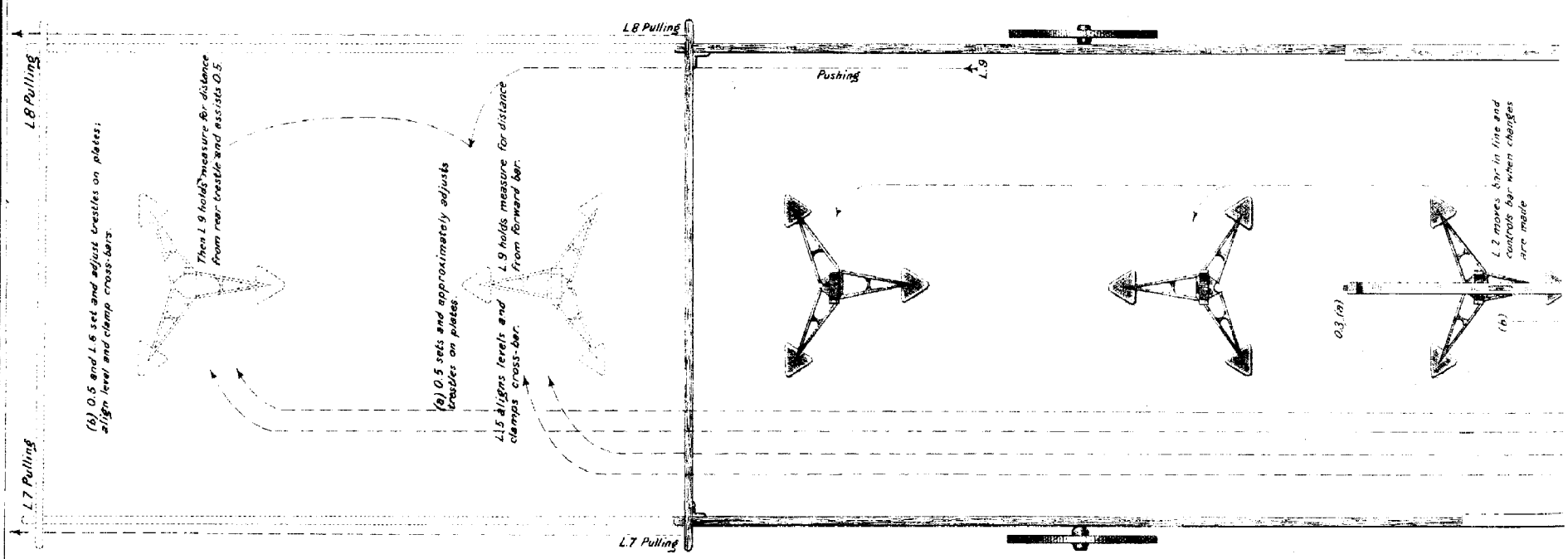


0.2 attends to all aligning poles, bridges, half-kilo blocks, comparing beam and general movement of party.

0.5 attends to all the work of placing plates and trestles.

0.3 aligns forward end of bar, reads Borda and Therm and checks sector reading

**EXPLANATION**

Geo. Davidson Officer No.1 = 0.1
J.S. Lawson " " 2 = 0.2
Fremont Morse " " 3 = 0.3
John Nelson " " 4 = 0.4
F. Westdahl " " 5 = 0.5
F.W. Edmonds " " 6 = 0.6
L.1, L.2, L.3 etc. = Laborer No.1, Laborer No.2 etc.

No person is at any time permitted to cross under the bars or b the trestles.
When the measurement stops, all hands leave the cover except 0. and L.1 who fix the reference block.

# LINE

## WORK

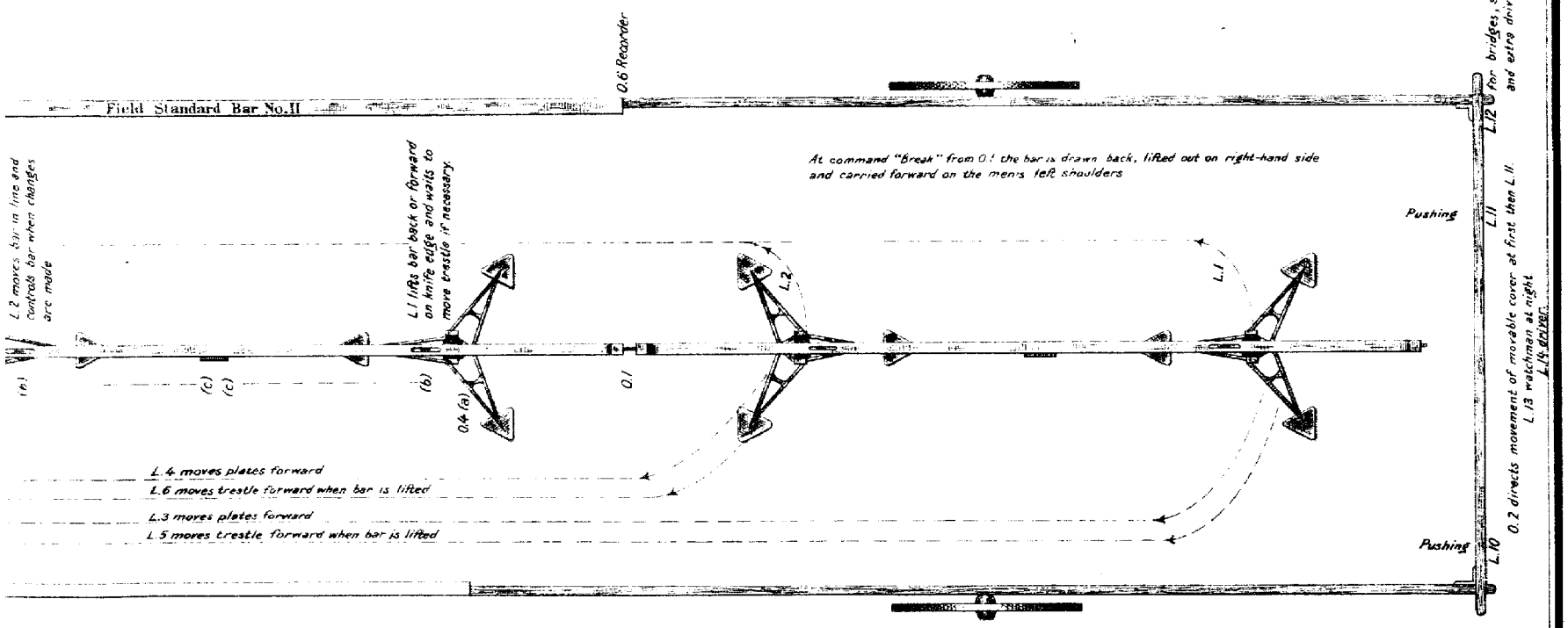


0.4 moves the after end of bar in line, lowers or raises it, reads Therm., reads sector, and makes check record of reading. Then guards forward bar as plate and trestle men are passing.

0.1 receives and controls end of bar coming in, adjusts distance, levels, aligns after end of bar, makes contact by the eye, directs other readings, reads Borda, makes contact under magnifier, "Breaks", presses back the forward end of bar to be removed and controls it until it is free of danger.

0.1 and 0.4 transfer by sector the ends of bar and the ground mark. 0.1 measures height of bar.
0.1 and 0.3 compare bars with Standard every morning.
0.3 and 0.4 examine sectors.
0.1 and 0.3 measure fractional bars.
0.3 examines aligning telescopes.

bars or between

except 0.1, 0.3

officers, six; men, eleven; watchman one; extra driver, one; driver for camp and field, one; in camp, cook, officers' steward, men's steward. Total number of officers and men, twenty-three.

### FOOT-PLATES OF THE TRESTLES.

These plates are the same as those used at Yolo base line. They need certain changes which experience has suggested.

The plates are laid independently of each other, and with practice the men became familiar with the best mode of setting them down. They were used on every character of ground, from the hard roadways to the quagmire, after the December storms.

Each plate weighs nine and a quarter pounds, and the points are steel riveted on top. They can not be made lighter.

### COMPARISONS OF THE BASE BARS NOS. 1 AND 2, AND THE FIELD STANDARD NO. 2.

I had cemented brick piers built in the pendulum house at the astronomical station, Lafayette Park, San Francisco, for the comparison of the bars with the standard.

The bars had not been used since 1881 and had remained at the sub-office, but the field standard had been sent to Washington and returned.

The field standard was examined and found in bad condition; oxidation had taken place between the zinc and steel bars and there was no free movement between them. The ends were in good order.

I took out the bars and cleaned them thoroughly and replaced them.

Then the wooden beam was covered with new sluice blanketing and a layer of three-fourths inch steam felting placed around it, and this covered with canvas.

The contact ends of the bars Nos. 1 and 2 were in good order. The movement between the zinc and steel was not free, but I took them out, thoroughly cleaned them, and replaced them in good condition. The contact slides were not in good order and the zero lines and contact slide lines were nearly obliterated.

These I had re-marked without appreciable change of zero.

Then the beams were covered with sluice blanketing and three-fourths inch steam felting. This was tightly covered with canvas.

A full series of comparisons was carried on hourly for three days and nights with one day and night intervening, and the field reductions made. Independent piers carried the comparators. The range of temperature was necessarily small.

The base bars and the standard were then taken by rail from San Francisco to Anaheim and thence five miles to camp.

Preparatory to making the first measurement of the base line, a series of hourly comparisons of the base bars and the field standard was made at middle base, Camp Colonna, extending through the day and night, to follow the law of the outstanding want of compensation and as data for any absolutely necessary reduction on that account. The party was too short-handed to keep up the field reductions, and could not even keep up the duplication of the records. These comparison observations showed at once that Bar No. 1 had changed its length in traveling, after the seventy-five hours' comparisons at San Francisco. The observations were carried through thirty hours upon two dates, so as to cover the large range of temperature.

Then the bars were removed to the southeast base, preparatory to the first measurement, where a series of comparisons, extending through two days and one night, was observed.

### COMPARISONS DURING THE BASE MEASUREMENT.

Every day before the observations of measurement, a double series of comparisons of the field bars and the standard field bar was made. This duty was never neglected, and upon one occasion, where a slight jar had been sustained by one of the bars, the measurement was stopped and comparisons made.

The weather, fortunately, became favorable after Christmas, and at the end of the first measurement, and at the end of the second, I did not stop to make an extended series of comparisons, but pushed the measurement with the men working enthusiastically; and the third measurement was finished before a regular series was undertaken. On the last day of measurement five double sets of comparisons were made at the end of the base, and on the next day five double sets. After these the bars were taken to Camp Colonna and sixty-one single sets of comparisons were made through three days and two nights.

In this last work the portable comparing beam was used, because it was found that by bracing the two cross-pieces upon which the bars rested the transverse movement was much better than on the piers, etc. The extra coverings on the base-bar beams were rather crowded, and improvements were then, as before, suggested; but could not be carried out in camp. This beam has been described in the Superintendent's Annual Report for 1882, page 146.

After all the bars were brought to San Francisco, observations for comparisons were not made, because they could not be used in the final reductions.

### PLACING THE FORWARD BAR IN POSITION.

This is the most hazardous operation in the measurement, for several reasons: the bar men carry the bar on their left shoulders and deliver the two ends to the two observers without seeing what they are doing. It has to be lifted high enough to clear the uprights on the trestles and lowered nearly into its proper position. The observer at the rear end governs the distance from the rear bar, and lets it come down upon the knife edge as nearly as may be at the right distance from the rear bar. When he receives the bar he holds back the contact slide and covers it with the fingers of his right hand to save it from striking the rear bar. He always aims to have the distance between the two bars too great rather than too small. On the under side of the bar beam there is a brass plate with cross triangular grooves that fit into the knife edge. These must be reasonably close together, so as to avoid large movement of the bar by the screw at the end. If it is seen that the knife edge is not in the right groove, the end of the bar is lifted very slightly by the assistant and the bar moved to another groove. The rear end of the bar is raised or lowered until the knife edge is midway on the plane end of the rear bar. Then the order to move the bar in line is accompanied by a movement of the bar lengthwise by the screw so as to have a naked-eye contact while the alignment is going on.

Before the readings of the Bordas and thermometers are made, the forward bar is slightly vibrated by the observer making contacts, and the final contact under the magnifier is made under a slight vibration, which is repeated if there is any apparent necessity.

### MOVING THE BARS INTO LINE.

The plan used on the Yolo base was substantially that used on the Los Angeles. A steel rod five-eighths of an inch in diameter and about fifteen inches long had a coarse thread cut upon it for about five inches under the bar behind each trestle bearing. One end of this rod was loosely fixed to the cross-bar just below the bar. The free end had a cross-bar for turning the screw which was lifted up against the under side of the bar, upon which was fastened a steel plate with a longitudinal knife edge fitting the screw thread and placed at an angle equal to the thread of the screw. This knife edge, therefore, entered one of the threads, and as the screw was turned, that end of the bar was necessarily moved sideways.

The method is all that is necessary, but the details should be carried out better.

For drawings of the application of this azimuth screw, see the Superintendent's Report for 1882, Appendix 8.

### MEASURE FOR FRACTIONAL BARS.

The measures of the fractional part of a bar were possible only at the conclusion of the first and third and the beginning of the second measurements.

The method and means employed were the same as those used on the Yolo base. The instrument for this measurement was as follows: The wooden part of the bar is of thoroughly seasoned white

cedar 0.05 of a metre thick, 0.113 of a metre deep, and 3.225 metres long. In order to prevent warping it was split in two equal pieces and one of them turned 180°, and then they were securely fastened together. One of the lower edges was rabbeted out sufficiently to let in a steel bar 0.012 of a metre square; this steel bar was graduated to three metres, and each one of these metres was compared with a standard metre by means of a micrometer beam compass, especially devised for the purpose. Sliding on this steel bar is a vernier with clamps and slow motion. On the side of the bar is an ordinary base-bar sector for measuring the inclination.

In measuring the fraction of five metres at the northwest base, the zero of the bar was placed over and in contact with the station point in the silver pin of the copper bolt; then the vernier was moved until it came vertically under the forward end of the base bar, as determined by the transit sector. The whole metre was then read off subject to the correction with the standard metre, and the fractional part of the metre was transferred by a knife-edge beam compass to a standard metre scale to be read.

### THE ALIGNMENT OF THE BARS.

The same arrangement has been followed as that which was originally proposed by me for the Yolo base. There is a small transit telescope at the forward end of each bar, which is adjusted over the centre of the bar, and which is aligned with the bar by means of the pendulum hung on the after end of the bar; several improvements are necessary for the better and closer adjustment of these telescopes. On the first measurement, the aligning of the bars was between the poles which had been put in by the theodolite and which ranged about one-half a mile apart. But in the second and third measurements the aligning was between the marks upon the half-kilometre stones. Over each of these marks a tripod was fixed and a heavy plumb bob was hung by a moderately thick line, such as the aligning telescope could see.

The aligning over the bars was examined each morning and through the day, if any necessity for doubt arose.

The difference of measure between the first and the second and third measurements at the half-kilometre stones was made by an ivory scale, divided to half-millimetres and the sector.

### THE COMPARATORS.

The observations of comparison of the base bars with the standard were made with the two Fauth lever-of-contact comparators, which accompany the apparatus. These comparators are described and illustrated in Assistant Schott's paper on the construction of the apparatus, Appendix 7, 1882.

The springs were too weak, and means were adopted to strengthen their action, but they do not act through fully one-third of the range.

### THE OPERATION OF A DAY'S MEASUREMENT.

The method of measurement may well be illustrated by a succinct account of one day's operations: Everybody was called at half-past five a. m., no matter what the weather was. The party arrived at the field about seven or eight a. m., according to distance. Roads very heavy in wet weather, and in many places no roads. Inside the movable cover Davidson and Morse commenced a double set of comparisons between the field standard bar No. 2 and the field bars Nos. 1 and 2. These are all borne on the comparing beam carrying the comparators. This work extended from twenty-three to thirty-eight minutes. Edmonds was recorder. Nelson and Westdahl prepared the tripods for receiving the bars to test the sectors and alignment of telescopes and bars. After the comparisons of bars, the two field bars were taken to the tripods and tested for level by Nelson and Morse. Morse and Davidson tested the aligning telescopes. It was very rare, indeed, to find an error of one minute of arc in the sector.

The movable cover was in the mean time raised on its wheels, the comparing beam, etc., removed to the wagon and the standard bar was lashed on the shady side of the movable cover.

The bars were then brought under the cover; the rear end of one, after fixing the contact slide at zero, was plumbed over the last night's reference mark by Davidson and aligned; the

thermometers and the Bordas of the bars were read, and then Nelson, at the sector, twenty feet off at right angles to the line, read off the difference between the end of the bar above and the ivory scale below, which latter is kept in position at the reference mark by Davidson or Morse, using a magnifier.

Then the next bar was brought into position, the rear end in approximate contact with the front end of the first or rear bar and nearly in line, after relieving the contact slide which had been set. Davidson adjusted the height of the bar, and he and Morse then aligned it. Nelson was at rear end moving it in height and screwing it into line, and Morse was at forward end. Davidson read the rear end Borda, Morse read forward end Borda and forward thermometer, Nelson read rear thermometer, set and noted the sector; Morse read sector and announced it, and the check was recorded by Nelson. Then Davidson slightly tapped the beam and made the final contact under the magnifier. While these operations were being executed, Westdahl set the third set of plates and tripods ahead; the men then returned to be at their stations at the rear bar. When these were ready, Davidson broke the contact of the two bars, the two bar men drew the bar aft and then lifted it on their shoulders and carried it forward where Morse at the forward end and Davidson at the rear end had moved ready to receive it. The tripod and plate men take the relieved plates and tripods and move forward, with Nelson on guard at the after tripod; the order to move the cover is given as the last plate is lifted, and everything is moving forward at and about the same time, but in proper sequence.

This method of measurement was repeated bar after bar until it was necessary to make a reference on the ground, either to place the half-kilometre stone in position or to fix a temporary stone for lunch, railroad crossing, or at the close of the day's work.

Mr. Lawson attended and directed all matters about the aligning poles, bridges, and trestles, railroad crossings, comparing beam, instruments, and supplies.

At the close of the day the wagon was near with the comparing beam; the wheels of the movable cover were removed, the temporary mark placed in the ground, and the transfer from the end of the bar to the mark in the copper stud was made by the sector. The bars were then put aside, the comparing beam brought in and placed on the two supporting horses, which were leveled both ways; the standard bar placed thereon with a measuring bar on each side; the comparators adjusted, and everything left snug and safe. The bars were covered by canvas against rain, and were thus left in a condition for comparison next morning. The reference mark was duly protected and the watchman, who had arrived from camp, was put in charge, and the party left for camp, so as to reach there about six o'clock. After dinner, Mr. Morse computed the morning's comparisons, Mr. Davidson attended to all official correspondence, and Mr. Lawson attended to all camp matters.

### THE RATE OF MEASUREMENT OF THE BASE.

The adverse nature of the ground and the inferior character of the base apparatus compelled a third measurement of the base line. Yet this third measurement was made in a very short time, and it is believed that it exceeds in accuracy the second as that does the first, because the idiosyncrasies of the instrument were understood and all the persons engaged in the measurement had acquired precision of movement and enthusiasm in doing good and rapid work. It is worthy of statement that in the measurements of the Yolo and Los Angeles base lines 18,991 bars were laid, and there was only one mishap in the cross-bar of the movable cover touching a tripod (Yolo); one movement of the after bar to the rear without an order, but after the contact had been made; one upward movement of the forward end of the rear bar too suddenly, and one movement where I slightly touched the rear end of the incoming bar on the screw flange of the standing bar.

The following tabulation gives in detail the time occupied in each measurement of the base; and very clearly indicates the increased efficiency in the successive measurements, although some allowance is to be given to the first measurement where heavy rains had made the ground a bog in places.

Very respectfully,

GEORGE DAVIDSON,
*Assistant U. S. Coast and Geodetic Survey.*

Prof. T. C. MENDENHALL,
*Superintendent U. S. Coast and Geodetic Survey, Washington, D. C.*

*Tabulation of Daily Work.*

FIRST MEASUREMENT, LOS ANGELES BASE LINE.

| Date. | Time for comparisons. | Sum of all delays. | Time of beginning work a. m. | Time of ending work p. m. | Time occupied during work. | Actual time of laying bars. | Number of bars laid during day. | Average number of minutes to each bar. | Average number of bars to each hour. |
|---|---|---|---|---|---|---|---|---|---|
| 1888. | h. m. | h. m. | h. m. | h. m. | h. m. | h. m. | | | |
| Dec. 13 | 0 43 | 4 34 | 7 35 | 2 10 | 6 35 | 1 58 | 24 | 4.92 | 12 |
| Dec. 15 | 0 31 | 2 13 | 9 23 | 3 50 | 6 27 | 3 45 | 63 | 3.57 | 17 |
| Dec. 17 | 0 35 | 3 18 | 8 09 | 4 55 | 8 46 | 4 53 | 113 | 2.60 | 23 |
| Dec. 18 | 0 41 | 3 34 | 7 51 | 4 45 | 8 54 | 4 39 | 100 | 2.79 | 22 |
| Dec. 19 | 0 45 | 2 07 | 7 39 | 4 18 | 8 39 | 5 47 | 140 | 2.48 | 24 |
| Dec. 20 | 0 38 | 2 20 | 7 46 | 5 10 | 9 24 | 6 26 | 160 | 2.41 | 25 |
| Dec. 21 | 0 37 | 2 14 | 7 31 | 2 10 | 6 39 | 3 48 | 100 | 2.28 | 26 |
| Dec. 28 | 0 42 | 2 28 | 7 40 | 5 00 | 9 20 | 6 10 | 171 | 2.16 | 28 |
| Dec. 29 | 0 42 | 3 37 | 7 30 | 4 45 | 9 15 | 4 56 | 129 | 2.29 | 26 |
| Dec. 31 | 0 40 | 2 25 | 7 27 | 5 10 | 9 43 | 6 38 | 200 | 1.99 | 30 |
| 1889. | | | | | | | | | |
| Jan. 1 | 0 37 | 2 32 | 7 05 | 5 15 | 10 10 | 7 01 | 220 | 1.91 | 31 |
| Jan. 2 | 0 34 | 2 25 | 7 06 | 5 10 | 10 04 | 7 05 | 220 | 1.93 | 31 |
| Jan. 3 | 0 36 | 3 05 | 6 50 | 5 08 | 10 18 | 6 37 | 217 | 1.83 | 33 |
| Jan. 4 | 0 43 | 2 14 | 6 56 | 5 15 | 10 19 | 7 22 | 203 | 2.17 | 28 |
| Jan. 5 | 0 35 | 2 50 | 6 56 | 4 40 | 9 44 | 6 19 | 216 | 1.75 | 34 |
| Jan. 7 | 0 32 | 3 14 | 7 11 | 5 20 | 10 09 | 6 23 | 169 | 2.27 | 26 |
| Jan. 8 | 0 34 | 2 08 | 7 16 | 5 05 | 9 49 | 7 07 | 207 | 2.06 | 29 |
| Jan. 9 | 0 33 | 2 25 | 7 26 | 3 52 | 8 26 | 5 28 | 174 | 1.88 | 32 |
| Jan. 10 | 0 30 | 2 36 | 7 30 | 4 55 | 9 25 | 6 19 | 210 | 1.80 | 33 |
| Jan. 11 | 0 30 | 2 35 | 7 34 | 4 50 | 9 16 | 6 11 | 224 | 1.66 | 36 |
| Jan. 12 | 0 34 | 2 27 | 7 32 | 4 45 | 9 13 | 6 12 | 200 | 1.86 | 32 |
| Jan. 14 | 0 32 | 2 56 | 8 20 | 1 30 | 5 10 | 1 42 | 39 | 2.62 | 23 |
| | | | | | | Average. | 159 | 2.33 | 27 |

Number of days, 22; number of bars, 3,499; working hours, 195¾; actual time of laying bars, $122^h\ 46^m$.

*Tabulation of Daily Work*—Continued.

SECOND MEASUREMENT, LOS ANGELES BASE LINE.

| Date. | Time for comparisons. | Sum of all delays. | Time of beginning work a. m. | Time of ending work p. m. | Time occupied during work. | Actual time of laying bars. | Number of bars laid during day. | Average number of minutes to each bar. | Average number of bars to each hour. |
|---|---|---|---|---|---|---|---|---|---|
| 1889. | h. m. | h. m. | h. m. | h. m. | h. m. | h. m. | | | |
| Jan. 15 | 0 38 | 1 59 | 8 12 | 3 30 | 7 18 | 4 41 | 124 | 2.27 | 26 |
| Jan. 16 | 0 35 | 3 00 | 9 12 | 4 55 | 7 43 | 4 08 | 138 | 1.80 | 34 |
| Jan. 17 | 0 30 | 2 14 | 8 00 | 4 30 | 8 30 | 5 46 | 237 | 1.46 | 41 |
| Jan. 18 | 0 35 | 1 45 | 7 49 | 4 30 | 8 41 | 6 21 | 200 | 1.90 | 31 |
| Jan. 19 | 0 32 | 2 00 | 7 50 | 4 35 | 8 45 | 6 13 | 260 | 1.43 | 42 |
| Jan. 21 | 0 38 | 2 09 | 7 26 | 5 00 | 9 34 | 6 47 | 260 | 1.57 | 38 |
| Jan. 22 | 0 38 | 2 30 | 7 20 | 5 00 | 9 40 | 6 12 | 240 | 1.55 | 39 |
| Jan. 23 | 0 40 | 2 14 | 7 13 | 5 15 | 10 02 | 7 08 | 270 | 1.59 | 38 |
| Jan. 24 | 1 31 | 3 07 | 6 53 | 5 11 | 10 14 | 6 36 | 270 | 1.47 | 41 |
| Jan. 25 | 0 32 | 2 22 | 6 56 | 5 15 | 10 19 | 7 25 | 290 | 1.54 | 39 |
| Jan. 26 | 0 48 | 2 12 | 7 14 | 4 45 | 9 31 | 6 31 | 270 | 1.45 | 42 |
| Jan. 28 | 0 32 | 2 02 | 7 20 | 5 25 | 10 05 | 7 31 | 324 | 1.39 | 43 |
| Jan. 29 | 0 35 | 2 11 | 7 20 | 5 00 | 9 40 | 6 54 | 256 | 1.61 | 37 |
| Jan. 30 | 0 34 | 1 53 | 7 33 | 5 00 | 9 27 | 7 00 | 240 | 1.75 | 34 |
| Jan. 31 | 0 34 | 2 16 | 7 45 | 4 35 | 8 50 | 6 00 | 220 | 1.64 | 37 |
| | | | | | | Average. | 240 | 1.63 | 37 |

Number of days, 15; number of bars, 3,599; working hours; 138⅓; actual time of laying bars, $95^h\ 13^m$.

THIRD MEASUREMENT, LOS ANGELES BASE LINE.

| Date. | Time for comparisons. | Sum of all delays.* | Time of beginning work a. m. | Time of ending work p. m. | Time occupied during work.† | Actual time of laying bars. | Number of bars laid during day. | Average number of minutes to each bar. | Average number of bars to each hour. |
|---|---|---|---|---|---|---|---|---|---|
| 1888. | h. m. | h. m. | h. m. | h. m. | h. m. | h. m. | | | |
| Feb. 1 | 0 33 | 2 25 | 7 55 | 5 05 | 9 10 | 6 12 | 252 | 1.48 | 41 |
| Feb. 2 | 0 32 | 1 09 | 7 51 | 11 20 | 3 29 | 1 48 | 40 | 2.70 | 22 |
| Feb. 4 | 0 31 | 2 09 | 8 05 | 5 10 | 9 05 | 6 25 | 258 | 1.45 | 40 |
| Feb. 5 | 0 34 | 3 01 | 7 27 | 5 20 | 9 53 | 6 18 | 270 | 1.40 | 43 |
| Feb. 6 | 0 29 | 2 05 | 7 33 | 5 20 | 9 47 | 7 13 | 340 | 1.27 | 47 |
| Feb. 7 | 0 29 | 2 15 | 7 14 | 5 25 | 10 11 | 7 27 | 340 | 1.31 | 46 |
| Feb. 8 | 0 49 | 1 51 | 7 03 | 5 30 | 10 27 | 7 47 | 362 | 1.29 | 47 |
| Feb. 9 | 0 31 | 2 04 | 6 56 | 4 45 | 9 49 | 7 14 | 278 | 1.56 | 39 |
| Feb. 11 | 0 45 | 2 22 | 7 12 | 5 25 | 10 13 | 7 06 | 268 | 1.59 | 38 |
| Feb. 12 | 0 35 | 1 47 | 7 15 | 4 50 | 9 35 | 7 13 | 292 | 1.49 | 41 |
| Feb. 13 | 0 31 | 1 54 | 7 30 | 4 45 | 9 15 | 6 51 | 300 | 1.37 | 44 |
| Feb. 14 | 0 31 | 1 25 | 7 31 | 4 55 | 9 24 | 7 24 | 400 | 1.11 | 54 |
| Feb 15 | 1 56 | 2 37 | 7 59 | 3 30 | 7 31 | 2 58 | 99 | 1.80 | 33 |
| | | | | | | Average. | 269 | 1.52 | 41 |

Number of days, 13; number of bars, 3,499; working hours, 117¾; actual time of laying bars, $81^h\ 56^m$.

* This includes time taken for lunch, plumbing down, setting stones, accidents, etc.

† Does not include time occupied in going to and from camp.

*Summary of the Statistics of the Three Measurements of the Los Angeles Base Line.*

| | First measurement. | Second measurement. | Third measurement. |
|---|---|---|---|
| Total number of bars laid, | 3.499 | 3.599 | 3.499 |
| Total number of working days, | 22 | 15 | 13 |
| Total number of working hours, | 195¾ | 138⅓ | 117¾ |
| Average daily number of bars, | 159 | 240 | 269 |
| Average daily number of bars per hour, | 27 | 37 | 41 |
| Highest hourly average for day, | 36 | 43 | 54 |
| Highest number of bars in one day, | 224 | 324 | 400 |
| Highest number of bars in one hour, | 44 | 54 | 64 |
| Quickest time for 100 consecutive bars, | | | h. m. 1. 36⅛ |

The exhibit of the third measurement by days is as follows:

| Date. | Time. | Metres. | Remarks. |
|---|---|---|---|
| 1889. | | | |
| Feb. 1 | 1 day | 1,260 | Nearly all plowed land and heavy. |
| Feb. 2 | ¼ day | 200 | Rougher than "Hell's Half Acre" of the Yolo, and measured while a "Santa Ana" was blowing 35 miles per hour, and eight men held buggy from blowing over; 1 gate. |
| Feb. 4 | 1 day | 1,290 | Nearly all plowed land and heavy; 3 gates. |
| Feb. 5 | 1 day | 1,350 | Mostly plowed ground, heavy; 3 gates. |
| Feb. 6 | 1 day | 1,700 | Grassy land, never plowed; some sand, a little plowed; 1 bridge. |
| Feb. 7 | 1 day | 1,700 | 315 M., plowed ground, heavy, |
| Feb. 8 | 1 day | 1,810 | 200 M., plowed ground, very heavy. |
| Feb. 9 | 1 day | 1,390 | Ground very heavy, rough, long grass; 1 gate. |
| Feb. 11 | 1 day | 1,340 | 4 bridges, 1 railroad; very hard work. |
| Feb. 12 | 1 day | 1,460 | Hard ground and rough, some long grass. |
| Feb. 13 | 1 day | 1,500 | Long grass for greater part, rough. |
| Feb. 14 | 1 day | 2,000 | 300 M., rough, long grass; 2 bridges, 1 railroad. Time 7h. 24m. |
| Feb. 15 | ½ day | 496 | Heavy incline; rough; squalls of wind and rain; 1 gate. |

Eleven and three-quarter days, 17,496 metres=1,489 M. per diem.

Actual time of laying the bars (3,499)=eighty-one hours and fifty-six minutes, or one and two-fifths minutes for each bar. Every morning the bars compared twice with standard. Fastest 1,620 metres, 5h. 46m.; fastest 100 bars in 96⅓ minutes, 104 minutes, 101 minutes, on the 14th.

Greatest inclination, 4°57½′. Base bars now weigh 162 pounds; plates, 9¼ pounds. Base line not graded; part has never been plowed. No accident. No mistake in the whole measurement of 3,499 bars; 17 persons.

Blank page retained for pagination

# APPENDIX No. 11.—1889.

## THE DISTRIBUTION OF THE MAGNETIC DECLINATION IN THE UNITED STATES FOR THE EPOCH 1890.

[Second edition*—with four illustrations.]

By CHARLES A. SCHOTT, Assistant.

### TABLE OF CONTENTS.


| | Page. |
|---|---|
| Introduction | 233 |
| Retrospective view of work done by the Coast and Geodetic Survey relating to magnetic declinations | 234 |
| Theory and effect of local disturbances in the distribution of the declination, dip, and intensity | 235 |
| Collection and tabular arrangement of magnetic declinations | 237 |
| General distribution of data in the States, Territories, and other geographical divisions | 239 |
| Table of observed declinations and values reduced to the year 1890 | 239 |
| Construction of the isogonic curves for the United States (exclusive of Alaska) | 394 |
| Distribution of the declination in Alaska and adjacent regions | 395 |
| Establishment of an analytical expression for the distribution in Alaska | 398 |
| Construction of the isogonic curves for Alaska | 400 |
| Definition of magnetic meridians and parallels | 401 |
| Construction of magnetic meridians for the United States (exclusive of Alaska) | 402 |


### ILLUSTRATIONS.


Plate No. 24, Disturbed iso-magnetic curves.
Chart No. 25, Isogonic curves for the United States (exclusive of Alaska) at the epoch 1890 (January).
Chart No. 26, Isogonic curves for Alaska and adjacent parts, with annual change of the declination, for 1890.
Chart No. 27, Magnetic meridians of the United States (exclusive of Alaska) and annual change of the declination, for the epoch 1890.


COAST AND GEODETIC SURVEY OFFICE,
*Computing Division, October*, 1889.

### INTRODUCTION.

Since the year 1882, when I first attempted to utilize the whole of the collected results of magnetic declinations, and tabulated and charted the same to exhibit their distribution within the boundaries of the United States, the material available for this purpose has not only greatly increased, but permits much greater precision to be given to these researches. The table of results now presented exceeds that of the first edition by nearly nine hundred stations, and the means for bringing these up to a common epoch have likewise increased even in a greater ratio, as is shown by the rapid succession of new editions of the paper on the Secular Variation of the Magnetic Declination, of which the seventh edition appeared in the Annual Report for 1887–'88, Appendix No. 7.

The results of the researches in terrestrial magnetism by the Coast and Geodetic Survey have had a wide distribution of late years, nevertheless as they become better known the demand for the latest discussions is ever increasing and compels the issue of new editions embodying the latest

* The first edition appeared in 1882 and forms Appendix No. 13 of the Superintendent's Report for that year.

information as often as is warranted by the accumulation of new material, or as often as may be demanded by the natural changes of the phenomena themselves.

Not less urgent reasons for keeping the researches up to date, are the need of supplying the coast and sailing charts and other publications by the Survey with the "variation of the compass" and with its annual change, and the obvious necessity of reconstructing from time to time the isogonic charts as their imperfections become apparent.

By taking a short retrospective view of what has been done by the Survey in advancing our knowledge of this branch of terrestrial physics, and by comparing the results reached at different times we become further impressed with the slow but systematic changes in the magnetic conditions of the earth's crust and with the gradual recognition of the laws which apparently govern the same—at least within our geographical limits.

The first table of declination results accompanied by an isogonic chart was published by A. D. Bache, Superintendent, and J. E. Hilgard, Assistant, in the Annual Report for 1855, Appendix No. 47 and plate No. 56. The declinations were reduced to a common epoch, viz, 1850, by means of assumed values of the annual change, and for convenience of discussion the declinations were arranged in geographical groups which could be separately treated by application of Dr. Lloyd's interpolation formula.* The table comprises one hundred and fifty-three stations and the isogonic curves computed for each degree of declination cover but a narrow strip along the coast-line. In the following year the same authors produced a new chart, retaining, however, the epoch 1850, as the result of a more extended discussion, inclusive of all recent observations. (See Annual Report of 1856, Appendix No. 28.) On plate No. 61 of that report, the isogonic curves fairly cover the area of the eastern part of the United States as well as the area bordering on our Pacific coast, and a connection is shown over the Gulf of Mexico and along the Mexican boundary. The curves were compared with those resulting from Gauss's general theory of terrestrial magnetism,† published in 1838. The average epoch of the data used by Gauss is about 1829 and the authors notice the accord of the form of the curves with those covering the same area but resting on observations up to 1850. Comparisons were also made with the Barlow chart in the Phil. Trans. Roy. Soc., 1833, (Part II, p. 667 and following) and with Prof. E. Loomis's chart for 1840, Silliman's Journal Science and Arts, Vol. XL; the latter should be noted as the first detail chart extending some distance into the interior of the country. Lieut. Col. E. Sabine's chart for 1840 (Phil. Trans. Roy. Soc., 1849, Part II, p. 173 and following) exhibits the distribution of the declination over the Atlantic Ocean and was of assistance by pointing out the direction of prolongation of the isogonic curves near and beyond the coast-line seawards.

The Annual Report for 1861, Appendices No. 23 and No. 24 contains two small isogonic charts (plate No. 30) designed for a special purpose and in aid of navigation along our southern coast; epoch 1860.

The Annual Report for 1862, Appendix No. 19, gives an account of a magnetic survey of the State of Pennsylvania, and on plate No. 47 shows iso-magnetic lines laid down for the two epochs 1842 and 1862. This was the first attempt for a State Magnetic Survey; though meagre in observations it was not followed until recent times for Missouri and New Jersey.

The next isogonic chart, constructed by the present writer, accompanies Appendix No. 19 of the Annual Report for 1865, plate No. 27; it is on a larger scale but covers about the same area as the chart of 1856; it embodies, however, the results accumulated and uses the latest information respecting the secular change. The epoch is 1870.

The chart next issued, report for 1876, Appendix No. 21, plate No. 24, is due to Assistant J. E. Hilgard. It is referred to the epoch 1875, and includes the results of the Survey up to 1877, and in part to 1879, as well as about two hundred recent observations made from 1871 to 1876

* Proposed by Dr. H. Lloyd, of Dublin, in 1838, see eighth report of the British Association for Adv. of Sc., Vol. VII, p. 91 and following; see also note by Archibald Smith in Lieut. Col. E. Sabine's contribution to terrestrial magnetism, No. VII, in Phil. Trans. Roy. Soc., Part III, 1846, p. 248 and following.

† In his general theory, Gauss used twenty-four coefficients depending on observations distributed, as regularly as may be, over the greater part of the accessible surface of the globe, and including declinations, dips, and intensities. A later attempt made by Erman and Petersen (Berlin, 1874) to introduce into this theory additional material and to reduce the same to the epoch 1829 by a strict account of the secular variation has not resulted to any marked degree in any essential change in the curves as originally given by Gauss.

under the auspices of the National Academy of Sciences and at the charge of the Bache-Fund. In this chart the isogonic curves are spread over the whole of the United States, excepting Alaska, and distinct notice is taken of certain large irregularities in the distribution of magnetism which obtruded themselves in some eastern and central parts of the chart, the curves over the western part remaining smooth and regular.

*Distribution of the Magnetic Declination for* 1885.—This publication, brought out in the Annual Report for 1882, Appendix No. 13, has been designated our "first edition" on account of its completeness, a special chart for Alaska and adjacent regions being included. The arrangement of the table of results is alphabetic by States, with two sub-divisions in each, one for Coast and Geodetic Survey results, the other for results from all remaining available sources; the table contains 2359 stations, and the results are charted on two large maps (scale $\frac{1}{5\,000000}$), one for the eastern, the other for the western part of the United States, and a third one (scale $\frac{1}{13\,700000}$) embraces Alaska and adjacent waters. On the two-sheet map the isogonic curves were constructed by a graphical process, but on the smaller one their position depends upon an analytical formula. As far as the accumulated material permitted, special notice was taken of all locally disturbed regions in the direction of the magnetic needle, and the extent and amount of such local deflections are shown on the chart. It had been rather customary to exhibit the distribution of magnetism by regular curves, and such geometrical representation was even regarded by some as a true exhibit of facts, whereas, in reality, the curves are distorted and assume irregular shapes through the effect of *local* irregularity of distribution extending, say, over a few square kilometres, as well as from greater deviations spread over many square degrees of surface. The former deflections are difficult to distinguish from errors of observation, but the latter can be recognized by the concordant results of all observations within the region and by their systematic deviations. Further stimulus was given to this subject by the recent magnetic survey* of the State of Missouri, which was aided by the Coast and Geodetic Survey with the loan of a magnetometer and a dip circle. The isogonic curves on the map of Alaska do not exhibit these irregularities, since they are the result of computation; further, it must be supposed that the distribution of magnetism is more regular over ocean areas than over land areas. The following paragraph is retained unchanged from the first edition:

Prominent among those who have made local magnetic disturbances a special study were Dr. John Locke, in this country, and the late Dr. Lamont, in Germany. In the spring and summer of 1844, Dr. Locke examined experimentally into the local distribution of magnetism about the Palisades, New Jersey, and presented his results in diagrams of isoclinic and isodynamic curves.† Dr. Lamont, in a work entitled "Researches of the direction and intensity of terrestrial magnetism in Northern Germany, Belgium, Holland, and Denmark," executed by Dr. J. Lamont, in the summer of the year 1858 (Munich, 1859), gives analytical expressions of the effect of a given disturbance on the direction and intensity experienced by a magnetic needle, and diagrams of the consequent deformation produced in the isogonic, the isoclinic, and the isodynamic curves over the perturbed region. Since these formulæ do not appear to be so well known as their importance deserves, and on account of their instructive application to the iso-magnetic curves, I give here a free translation of part of the contents of page 21 of the preface.

Suppose a magnetic south pole of intensity, P, vertically below the point A on the earth's surface, and at a depth equal to unity, and it be required to determine its effect upon the magnetism at a second point, B, on the surface distant from A equal to $r$ and in azimuth $\psi$ reckoned from magnetic north round by west, then the effect of the pole P at the point B will be

$$\text{in declination} = -\frac{P}{H \sin 1'} \cdot \frac{r \sin \psi}{(1+r^2)^{\frac{3}{2}}} \text{ expressed in minutes}$$

$$\text{in horizontal intensity} = -P \cdot \frac{r \cos \psi}{(1+r^2)^{\frac{3}{2}}} \text{ in absolute measure}$$

$$\text{and in dip} = \frac{P}{H \sin 1'} \cdot \frac{\cos \theta (\cos \theta + r \cos \psi \sin \theta)}{(1+r^2)} \text{ in minutes}$$

* By Prof. F. E. Nipher, Washington University, at St. Louis, during the years 1878–'79–'80–'81–'82.

† Transactions American Philosophical Society, Philadelphia, Vol. IX, 1846.

where H = the horizontal force and $\theta$ = the dip. These formulæ are approximations, but quite close enough for the purpose intended.* Applied to a case in Middle Europe, Dr. Lamont shows that the curves of horizontal intensity to the magnetic north and south of the center of disturbance are bent inwards or toward it, and that the curves of equal declination to the east and west of the disturbance are bent outwards or away from it, whereas the curves of equal dip are bent southward, directly over the point of disturbance, as well as to the north of it, also up to a certain distance to the south of it. Supposing the iso-magnetic curves over a disturbed region given by observation, the position of the point on the surface vertically above the point of disturbance, that is, its latitude and longitude, may be found from the disturbed declination and intensity curves, and the depth of the point of disturbance from the dip curves, the intensity of the disturbance being determined by the amount of bending of the curves. After commenting on the highly instructive nature of the application of the formulæ when thrown into curves, he remarks: "It is, however, not to be imagined that the irregularities in the magnetic curves are produced by a single pole of disturbance, such as has been supposed above, but rather by a series of such poles forming peaks or ridges of disturbance." In fact, the distribution in space of disturbing poles and their intensities must be taken as indefinitely variable, and their joint effect may give rise to a great variety of deformations. "To follow them up to their source in any special case would necessarily require observations at a great number of points closely packed over the region under investigation."

To illustrate the use of these formulæ, I have applied them to a disturbed region, and assuming the position, depth, and intensity of a magnetic pole, have computed the deformations of the isogonic, isoclinic, and isodynamic curves for the purpose of comparing them with their corresponding curves as deduced from observations.

The region selected is in Southern Vermont, and the computation is made for $\varphi=43\frac{1}{2}°$, $\lambda=72\frac{1}{2}°$, at which place the declination $D = +11\frac{1}{2}°$, the dip $\theta=74\frac{1}{2}°$, and the horizontal intensity in British units $H=3.50$ for the year 1885. The distances apart of the iso-magnetic lines under the supposition of equable distribution of magnetism were taken from charts, as well as their azimuths, as presented on the diagrams of the accompanying illustration (No. 24), where these respective systems of lines are shown by dashes. The disturbing pole is supposed to be 60 kilometres below the surface (a little over 37 statute miles); its magnetism is assumed to be of south polarity, the same as that of the northern magnetic hemisphere, and its intensity is supposed equal to one-fortieth of that of the horizontal force. With these assumptions the formulæ give the theoretical deformed curves as shown in full lines on this illustration, and it will be seen that these disturbed systems of iso-magnetic curves conform, with respect to curvature, to what has been stated to hold for Central Europe; also that the deflections of the dip curves are less in amount than those of the horizontal intensity and of the declination.

The maximum deflection nearly approaches half a degree for the declination, 0.030 (Brit. units) for the horizontal intensity and seven minutes for the dip. This would indicate that the above assumption as to depth and intensity of disturbing pole is quite a moderate one.

The diagrams are drawn to scale and the disturbing effect upon the direction of the horizontal needle is still perceptible beyond the region included within the area of a circle of radius 160 kilometres (nearly 100 statute miles), and a comparison in this region of the curvature of the theoretical or disturbed isogonics with the actual curvature of the isogonics as derived from observation and given on the chart, indicates a general conformity, which by suitable changes in the assumptions might be more closely approximated.

Much difficulty was experienced in tracing out the isogonic lines on the Pacific coast, and in general over the area west of the one hundred and fifth meridian; in this part of the country

* We have distance $PB=(1+r^2)^{\frac{1}{2}}$ and $\cos ABP=\frac{r}{(1+r^2)^{\frac{1}{2}}}$ and remembering that attractions and repulsions of magnetic quantities are inversely as the square of their distance, and consequently that the *disturbing* effect of magnetic energy upon a magnetic needle is inversely as the cube of their distance, the disturbing force in the direction AB becomes $-\frac{Pr}{(1+r^2)^{\frac{3}{2}}}$ and the disturbing force acting at right angles to the needle, when expressed in parts of the horizontal force, $-\frac{P}{H}\cdot\frac{r\sin\psi}{(1+r^2)^{\frac{3}{2}}}$; hence the expression for angular disturbance in declination expressed in minutes, as given above.

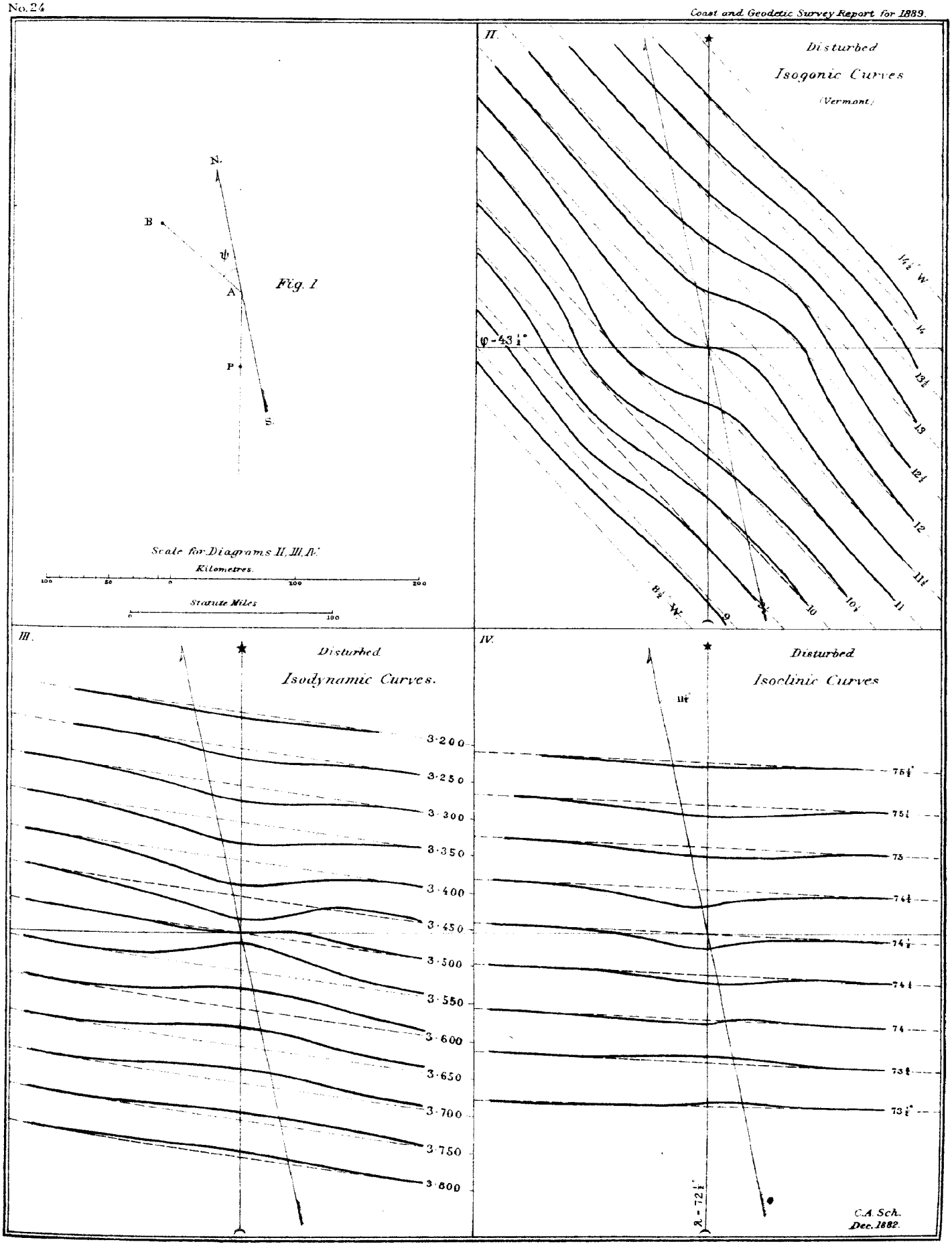
N.
B
ψ
A
P
S.
Fig. 1
Scale for Diagrams II, III, IV.
Kilometres.
100
50
0
100
200
Statute Miles
0
100
II.
Disturbed
Isogonic Curves
(Vermont)
φ - 43½°
14½° W.
14
13½
13
12½
12
11½
11
10½
10
9½
9
8½° W.
III.
Disturbed
Isodynamic Curves.
3·200
3·250
3·300
3·350
3·400
3·450
3·500
3·550
3·600
3·650
3·700
3·750
3·800
IV.
Disturbed
Isoclinic Curves
11½°
75½°
75¼
75
74¾
74½
74¼
74
73¾
73½°
λ - 72½°
C.A. Sch.
Dec. 1882.

observations require to be greatly multiplied, and some time must necessarily elapse before the law of the annual change can become better known—remarks which remain true for the present edition.

Magnetic surveys of a country may be pursued in two ways, either by continued slow but gradual additions, year after year, or by concentrated efforts during one or at most a few years, but repeated at rather long intervals, say of a quarter of a century, more or less. The second method is but slightly dependent on the secular variation, since for any one survey the reduction to the mean epoch will always be small; it is otherwise with the first-named method, which demands as complete a knowledge of the secular variation as can be had. In consequence of large extent of the United States the first method is the one properly and necessarily adopted, whereas in less extended countries, such as for England and for one or two European continental States, the second method has been followed.

It is, however, of greater importance than the above distinction to keep up at some central station a continuous registry of the changes in direction and intensity of terrestrial magnetism, and after a series of years to shift the station to another region least known magnetically. Thus the Coast and Geodetic Survey has accumulated most valuable material in Florida, Wisconsin, California, and is about to include Texas—a branch of inquiry into the laws of magnetism which does not further concern us in this place.

We come now to the special exposition of the contents of the new edition of this paper showing the distribution of the magnetic declination for January, 1890.

The collection and arrangement of the observed declinations form one of the most laborious parts to be gone through in the preparation for a new edition of the distribution of the declinations, the other parts being the reduction to a common epoch and the platting and charting of the results. The collection of observed declinations comprises all stations occupied within the boundaries of the United States with a limited geographical extension over adjacent regions in order to facilitate the graphical representation of the results. The table contains comparatively few stations dating from a time earlier than the present century, and in all cases where a station has been repeatedly occupied only the *latest* or that *nearest* the epoch 1890 has been given. The table comprises 3237 stations and its contents are arranged as follows:

(*a*) The observed declinations are given for each State and Territory for the United States and for suitable geographical subdivisions for adjacent regions; the classification by States and divisions is alphabetical, with the foreign parts appended.

(*b*) For each State or division the material has been sub-divided into two groups, one being wholly composed of Coast and Geodetic Survey stations, the other being derived from all other sources whatever.

(*c*) The declinations in each State, division, or group are arranged according to the latitude of the stations. The contents of the several columns of the table are sufficiently indicated in a general way by the headings and need but little additional or detailed explanation. The columns headed $\varphi$ and $\lambda$ give the latitude and longitude of the station, respectively, to the nearest minute of arc, an accuracy sufficient for our purpose. $\lambda$ is given in degrees and minutes of *west* longitude from Greenwich.

The date of observation $t$ is expressed by the year and decimal fraction, as near as known. The plus sign in the column of declinations D signifies *west* declination, the minus sign the contrary.

The values presented in the column headed $\Delta$D are the reductions required to bring the observed declinations up from the time $t$ to the epoch January 1, 1890. To effect this a special set of auxiliary tables was prepared, derived from my researches of the secular variation,* as published in the Annual Report of the Survey for 1887–'88, Appendix No. 7 (Washington, 1889). For every secular variation station there given, the declination was computed for every year between 1850 and 1890, and for every tenth year for dates prior to 1850; a table of differences was next formed between these values and that for 1890, with a sign prefixed so as to give at once the reduction to the epoch 1890. These tables of differences were placed side by side for stations

* Known as the seventh edition.

forming a geographical group, so that the *double* interpolation for time and space could readily be effected, first by running the eye over the horizontal line marked with the particular year and next by noting the changes in its values due to position of stations. Allowance was then made for the relative position of the station in question. The values in this column ($\Delta$D) are due to Mr. L. A. Bauer, of the Computing Division. A + sign indicates increase of westerly declination or decrease of easterly declination, a — sign the reverse; where blanks occur, the reduction to the common epoch either was deemed too uncertain or information was altogether wanting. At first it was contemplated to reduce all observations to the year 1895, but it was soon found that for a large part of the country (mainly that lying west of the Mississippi) the secular variation was too imperfectly known for any safe reduction to this advanced epoch, and 1890 was chosen for the epoch as preferable in point of accuracy.

In the last column of the table headed "References" certain abbreviations were used of which the principal ones are given below. The addition of (S. V. S.) to the name indicates that the station is a secular variation station and consequently that the value $D_{1890}$ is taken from the seventh edition of the researches referred to above.

*Principal abbreviations used in the last column of the table.*

| | |
|---|---|
| Ad. and S. L. Sur. | Adirondack State Land Survey, Verplanck Colvin, superintendent, Albany, N. Y. |
| Ad. Sur. | Adirondack Survey, V. Colvin, superintendent, Albany, N. Y. |
| Am. Acad. Sc. | Memoirs American Academy of Arts and Sciences, Boston. |
| Am. Phil. Soc. | American Philosophical Society, Philadelphia. |
| Bd. or Bound. Sur. | Boundary Survey. |
| C. & G. S. | U. S. Coast and Geodetic Survey, annual reports. |
| C. S. | U. S. Coast Survey, annual reports. |
| Exc. Doc. | Congressional Executive Document (Senate or House). |
| Geol. Sur. | Geological Survey. |
| Geol. Sur. Ter. | Geological Survey of the Territories. |
| Gov't Sur. | Government Survey. |
| Hyd. Not. & Hyd. Off. | U. S. Hydrographic Notices and Hydrographic Office. |
| Mo. & Yel. St. Exp. Exp. | Missouri and Yellowstone Exploring Expedition, 1865. |
| Nat. Acad. Sc. | National Academy of Sciences, Washington, D. C. |
| P. P., U. S. Eng's No. 24, 1882. | Professional Papers, Corps of Engineers, U. S. Army, No. 24, Washington, D. C., 1882. |
| Phil. Trans. Roy. Soc. | Philosophical Transactions Royal Society, London. |
| Pro. Asso. Dom. L. S. | Proceedings Association of Dominion Land Surveyors, Canada. |
| Rep. Ch. of Eng's. | Report of Chief of Engineers, U. S. Army. |
| Rep. Gen. Land Office. | Report of General Land Office. |
| Rep. N. W. Bound. Sur. | Report of the Northwest Boundary Survey. |
| Rep. of S. of I. A. | Report of Secretary of Internal Affairs of Pennsylvania, Harrisburg. |
| Sen. Pub. Doc. | U. S. Senate Public Documents. |
| Sig. Off. Rep. | U. S. Signal Corps Official Reports. |
| Sill. Jour. | Silliman's Journal of Science and Arts, or the American Journal of Science. |
| Smith'n Con's to Kn. | Smithsonian Contributions to Knowledge, Washington, D. C. |
| Tab. Geo. Pos. U. S. Eng's. | Table of Geographical Positions, U. S. Engineers. |
| U. S. Lake Sur. | Reports of U. S. Lake Survey. |

Names in parenthesis, in the column "Observer," are those of the chiefs of the parties.

The general distribution of the declination data in the States and Territories, and in the adopted geographical divisions beyond and adjacent to our boundaries is exhibited in the following table of number of stations in each:

| | | | | | |
|---|---|---|---|---|---|
| Ala. | 19 | Me. | 78 | Pa. | 118 |
| Alaska. | 80 | Md. and D. C. | 32 | R. I. | 9 |
| Ariz. | 51 | Mass. | 51 | S. C. | 12 |
| Ark. | 16 | Mich. | 241 | S. Dak. | 14 |
| Cal. | 74 | Minn. | 40 | Tenn. | 20 |
| Colo. | 46 | Miss. | 16 | Tex. | 38 |
| Conn. | 31 | Mo. | 126 | Utah. | 71 |
| Del. | 9 | Mont. | 57 | Vt. | 14 |
| Fla. | 40 | Neb. | 24 | Va. | 47 |
| Ga. | 54 | Nev. | 69 | Wash. | 77 |
| Ida. | 55 | N. H. | 19 | W. Va. | 13 |
| Ill. | 37 | N. J. | 131 | Wis. | 52 |
| Ind. | 15 | N. M. | 51 | Wyo. | 61 |
| Ind. T. | 8 | N. Y. | 271 | | |
| Iowa. | 33 | N. C. | 21 | Total in U. S. | 2585 |
| Kans. | 23 | N. Dak. | 21 | | |
| Ky. | 30 | Ohio. | 99 | | |
| La. | 30 | Oreg. | 41 | | |

| | |
|---|---|
| West Ind. Isl's, Central Amer., etc. | 52 |
| Mexico, west of $\lambda = 100°$ west. | 94 |
| Brit. Poss. and Can. to $\lambda = 75°$ west. | 109 |
| Same between $\lambda = 75°$ and $90°$ west. | 121 |
| Brit. Poss., N. W. Terr., $\varphi < 51°$. | 90 |
| Same for $\varphi > 51°$. | 126 |
| Waters of Alaska and Eastern Asia. | 60 |
| Total beyond and near boundaries. | 652 |
| Total number of stations used in the discussion. | 3237 |

*Table of Observed Magnetic Declinations and Values reduced to the Year* 1890.

ALABAMA. Group I.

| Name of station. | $\varphi$ | $\lambda$ | $t$ | D | $\Delta$D | $D_{1890.0}$ | Observer. | Reference. |
|---|---|---|---|---|---|---|---|---|
| | ° ′ | ° ′ | | ° | ° | ° | | |
| Fort Morgan, Mobile Pt. | 30 14 | 88 01 | 1847.40 | −7.07 | +1.78 | −5.29 | R. H. Fauntleroy and J. S. Ruth. | C. and G. S. Rep., 1881, App. 9. |
| Mobile, Public Square (S. V. S.). | 30 42 | 88 03 | 1857.13 | −6.87 | ------ | −5.23 | E. Goodfellow. | C. and G. S. Rep., 1881, App. 9. |
| Lower Peach Tree. | 31 50 | 87 33 | 1857.33 | −6.04 | +1.60 | −4.44 | G. W. Dean. | C. and G. S. Rep., 1881, App. 9. |
| Eufaula. | 31 54 | 85 08 | 1860.28 | −5.20 | +1.56 | −3.64 | G. W. Dean. | C. and G. S. Rep., 1881, App. 9. |
| Montgomery. | 32 23 | 86 18 | 1856.26 | −5.30 | +1.70 | −3.60 | G. W. Dean. | C. and G. S. Rep., 1881, App. 9. |
| Indian Mt. | 34 02 | 85 26 | 1875.65 | −4.18 | +0.80 | −3.38 | F. P. Webber. | C. and G. S. Rep., 1881, App. 9. |
| Decatur. | 34 37 | 86 59 | 1881.66 | −5.17 | +0.44 | −4.73 | J. B. Baylor. | C. and G. S. Rep., 1881, App. 9. |
| Florence (S. V. S.). | 34 47 | 87 42 | 1881.68 | −4.63 | ------ | −4.28 | J. B. Baylor. | C. and G. S. Rep., 1881, App. 9. |

*Table of Observed Magnetic Declinations and Values reduced to the Year* 1890—Continued.

ALABAMA—Continued. Group 2.

| Name of station. | φ | λ | t | D | ΔD | $D_{1890.0}$ | Observer. | Reference. |
|---|---|---|---|---|---|---|---|---|
| | ° ′ | ° ′ | | ° | ° | ° | | |
| Mobile (S. V. S.). | 30 42 | 88 03 | 1875.40 | — 6.12 | ------ | —5.23 | J. M. Poole. | Nat. Acad. Sc. |
| Evergreen. | 31 26 | 87 05 | 1875.40 | — 5.53 | +0.87 | —4.66 | J. M. Poole. | Nat. Acad. Sc. |
| Eufaula. | 31 54 | 85 08 | 1881.7 | — 4.20 | +0.50 | —3.70 | G. H. Brown. | MS. in C. and G. S. Office. |
| Cahaba. | 32 18 | 87 10 | 1860.3 | — 6.17 | +1.48 | —4.69 | W. Scott. | MS. in C. and G. S. Office. |
| Montgomery. | 32 23 | 86 18 | 1875.40 | — 4.65 | +0.84 | —3.81 | J. M. Poole. | Nat. Acad. Sc. |
| Selma. | 32 25 | 87 05 | 1875.44 | — 4.54 | +0.82 | —3.72 | J. M. Poole. | Nat. Acad. Sc. |
| Tuskegee, Macon Co. | 32 26 | 85 45 | 1888.5 | — 3.92 | +0.09 | —3.83 | W. C. Torrance. | MS. in C. and G. S. Office. |
| Opelika. | 32 40 | 85 25 | 1875.44 | — 4.53 | +0.86 | —3.67 | J. M. Poole. | Nat. Acad. Sc. |
| Tuscaloosa. | 33 12 | 87 40 | 1875.44 | — 6.08 | +0.82 | —5.26 | J. M. Poole. | Nat. Acad. Sc. |
| Birmingham. | 33 32 | 86 48* | 1875.44 | — 4.44 | +0.82 | —3.62 | J. M. Poole. | Nat. Acad. Sc. |
| Madison. | 34 41 | 86 48 | 1875.41 | — 5.19 | +0.76 | —4.43 | F. E. Hilgard. | Nat. Acad. Sc. |

* Corrected.

ALASKA TERRITORY. Group 1.

| | | | | | | | | |
|---|---|---|---|---|---|---|---|---|
| Amchitka Isd., Constantine Harbor. | 51 24 | E. 179 12† | 1873.58 | — 7.28 | +0.62 | — 6.66 | W. H. Dall. | C. and G. S. Rep., 1881, App. 9. |
| Adakh Isd., Bay of Seven Islands. | 51 49 | 176 52 | 1873.61 | —13.87 | +0.61 | —13.26 | W. H. Dall. | C. and G. S. Rep., 1881, App. 9. |
| Kyska Isd., Kyska Harbor. | 51 59 | E. 177 30 | 1873.55 | —11.11 | +0.62 | —10.49 | W. H. Dall. | C. and G. S. Rep., 1881, App. 9. |
| Atkha Isd., Nazan Bay. | 52 11 | 174 15 | 1873.65 | —16.96 | +0.60 | —16.36 | W. H. Dall. | C. and G. S. Rep., 1881, App. 9. |
| Attu Isd., Chichagoff Harbor. | 52 56 | E. 173 12 | 1873.48 | — 7.72 | +0.62 | — 7.10 | W. H. Dall. | C. and G. S. Rep., 1881, App. 9. |
| Cove Pt., Unalashka, Chernoffsky Bay. | 53 24 | 167 30 | 1880.75 | —16.26 | +0.36 | —15.90 | W. H. Dall and M. Baker. | C. and G. S. Rep., 1881, App. 9. |
| Unalashka Isd., Iliuliuk Hbr. (S.V.S.). | 53 53 | 166.32 | 1883.72 | —18.71 | ------ | —18.56 | R. A. Marr. | M. S. in C. and G. S. Office. |
| South Base, Portland Canal. | 54 46 | 130 24 | 1888.59 | —29.62 | +0.04 | —29.58 | A. N. Wood (C. M. Thomas). | MS. in C. and G. S. Office. |
| Howcan Mission, Kaigani Straits. | 54 50 | 132.50 | 1881.67 | —27.06 | +0.17 | —26.89 | H. E. Nichols. | C. and G. S. Rep., 1881, App. 9. |
| Little Koniushi Isd., Shumagins. | 55 03 | 159 23 | 1880.54 | —21.42 | +0.71 | —20.71 | W. H. Dall and M. Baker. | C. and G. S. Rep., 1881, App. 9. |
| Dolgoi Island, S. end. | 55 03 | 161 43 | 1880.56 | —17.98 | +0.53 | —17.45 | W. H. Dall and M. Baker. | C. and G. S. Rep., 1881, App. 9. |
| Tamgas Harbor. | 55 04 | 131 28 | 1883.59 | —28.58 | +0.14 | —28.44 | H. E. Nichols. | MS. in C. and G. S. Office. |

†East longitudes are indicated by a prefixed E.

*Table of Observed Magnetic Declinations and Values reduced to the Year* 1890—Continued.

ALASKA TERRITORY—Continued.

| Name of station. | φ | λ | t | D | ΔD | $D_{1890.0}$ | Observer. | Reference. |
|---|---|---|---|---|---|---|---|---|
| | ° ′ | ° ′ | | ° | ° | ° | | |
| Dolgoi I., Belkoffsky Settlement. | 55 05 | 162 00 | 1880.56 | —21.43 | +0.58 | —20.85 | W. H. Dall and M. Baker. | C. and G. S. Rep., 1881, App. 9. |
| Bay, Portland Canal. | 55 13 | 130 04 | 1888.66 | —27.74 | +0.04 | —27.70 | A. N. Wood (C. M. Thomas). | MS. in C. and G. S. Office. |
| Humboldt Hbr., Popoff Isd., Shumagins. | 55 19 | 160 31 | 1880.55 | —20.28 | +0.58 | —19.70 | W. H. Dall and M. Baker. | C. and G. S. Rep., 1881, App. 9. |
| Pen Isd., Ward's Cove, Tongass Narrows. | 55 23 | 131 44 | 1885.61 | —28.12 | +0.10 | —28.02 | R. A. Marr (R. Clover). | MS. in C. and G. S. Office. |
| Kasaan Bay, Prince of Wales Archipelago. | 55 30 | 132 19 | 1880.35 | —27.80 | +0.20 | —27.60 | W. H. Dall and M. Baker. | C. and G. S. Rep., 1881, App. 9. |
| Union Bay. | 55 45 | 132 12 | 1885.60 | —30.50 | +0.10 | —30.40 | R. A. Marr (R. Clover). | MS. in C. and G. S. Office. |
| Chirikoff Island. | 55 48 | 155 43 | 1874.45 | —23.02 | +1.37 | —21.65 | W. H. Dall. | C. and G. S. Rep., 1881, App. 9. |
| Chiachi Island. | 55 52 | 159 05 | 1874.48 | —21.93 | +1.37 | —20.56 | W. H. Dall. | C. and G. S. Rep., 1881, App. 9. |
| Port Moeller. | 55 55 | 160 35 | 1874.61 | —21.37 | +1.37 | —20.00 | W. H. Dall. | C. and. G. S. Rep., 1881, App. 9. |
| Head, Portland Canal | 55 56 | 130 00 | 1888.52 | —30.14 | +0.04 | —30.10 | A. N. Wood (C. M. Thomas). | MS. in C. and G. S. Office. |
| Dewey Anchorage, Clarence Strait. | 55 56 | 132 22 | 1886.69 | —28.50 | +0.14 | —28.36 | C. C. Marsh (A. S. Snow). | MS. in C. and G. S. Office. |
| Port McArthur, Sumner Strait. | 56 04 | 134 06 | 1886.57 | —27.83 | +0.14 | —27.69 | C. C. Marsh (A. S. Snow). | MS. in C. and G. S. Office. |
| Semidi Islands. | 56 05 | 156 39 | 1874.45 | —22.95 | +1.37 | —21.58 | W. H. Dall. | C. and G. S. Rep., 1881, App. 9. |
| Chican Village. | 56 09 | 133 28 | 1886.54 | —33.00 | +0.14 | —32.86 | C. C. Marsh (A. S. Snow). | MS. in C. and G. S. Office. |
| Point Chican. | 56 09 | 133 36 | 1886.58 | —29.42 | +0.14 | —29.28 | C. C. Marsh (A. S. Snow). | MS. in C. and G. S. Office. |
| Shakan, Prince of Wales Island. | 56 09 | 133 38 | 1881.62 | —30.05 | +0.30 | —29.75 | H. E. Nichols. | C. and G. S. Rep., 1881, App. 9. |
| Chignik Bay. | 56 19 | 158 24 | 1874.46 | —22.03 | +1.37 | —20.66 | W. H. Dall. | C. and G. S. Rep., 1881, App. 9. |
| East Base, Red Bay, Sumner Strait. | 56 20 | 133 15 | 1886.43 | —29.67 | +0.14 | —29.53 | C. C. Marsh (A. S. Snow). | MS. in C. and G. S. Office. |
| North Base, Fort Wrangell. | 56 27 | 132 23 | 1886.5 | —29.33 | +0.14 | —29.19 | C. C. Marsh (A. S. Snow). | MS. in C. and G. S. Office. |
| Fort Wrangell, Etolin Harbor. | 56 28 | 132 22 | 1881.63 | —29.28 | +0.30 | —28.98 | H. E. Nichols. | C. and G. S. Rep., 1881, App. 9. |
| East Base, Duncan Canal. | 56 36 | 133 06 | 1887.57 | —30.10 | +0.11 | —29.99 | C. C. Marsh (C. M. Thomas). | MS. in C. and G. S. Office. |
| South Base, Frederick Sound. | 56 55 | 132 51 | 1887.44 | —29.63 | +0.11 | —29.52 | C. C. Marsh (C. M. Thomas). | MS. in C. and G. S. Office. |

*Table of Observed Magnetic Declinations and Values reduced to the Year* 1890—Continued.

ALASKA TERRITORY—Continued.

| Name of station. | $\varphi$ | $\lambda$ | $t$ | D | $\Delta$D | $D_{1890.0}$ | Observer. | Reference. |
|---|---|---|---|---|---|---|---|---|
| | ° ′ | ° ′ | | ° | ° | ° | | |
| Portage Bay, Frederick Sound. | 57 00 | 133 20 | 1887.49 | —30.49 | +0.11 | —30.38 | C. C. Marsh (C. M. Thomas). | MS. in C. and G. S. Office. |
| Sitka, Japonski Island (S. V. S.). | 57 03 | 135 20 | 1881.70 | —29.19 | ------ | —28.40 | H. E. Nichols. | MS. in C. and G. S. Office. |
| Saint Paul Island, Pribiloff Islands. | 57 07 | 170 19 | 1880.60 | —17.65 | +1.05 | —16.60 | W. H. Dall and M. Baker. | C. and G. S. Rep., 1881, App. 9. |
| Cape Fanshaw, Frederick Sound. | 57 11 | 133 34 | 1887.54 | —30.08 | +0.11 | —29.97 | C. C. Marsh (C. M. Thomas). | MS. in C. and G. S. Office. |
| Kadiak Island, Saint Paul, Chagafka Cove (S. V. S.). | 57 48 | 152 21 | 1880.53 | —25.15 | ------ | —23.85 | W. H. Dall and M. Baker. | C. and G. S. Rep., 1881, App. 9. |
| Port Althorp, Cross Sound. | 58 12 | 136 24 | 1880.46 | —32.26 | +0.80 | —31.46 | W. H. Dall and M. Baker. | C. and G. S. Rep., 1881, App. 9. |
| Lituya Bay. | 58 37 | 137 40 | 1874.37 | —30.05 | +1.24 | —28.81 | W. H. Dall. | C. and G. S. Rep., 1881, App. 9. |
| Hagmeister Island. | 58 48 | 160 50 | 1874.60 | —22.88 | +1.64 | —21.24 | W. H. Dall. | C. and G. S. Rep., 1881, App. 9. |
| Dangerous Cape, Cook's Inlet. | 59 24 | 151 53 | 1880.51 | —24.54 | +1.27 | —23.27 | W. H. Dall and M. Baker. | C. and G. S. Rep., 1881, App. 9, |
| Port Mulgrave, Yakutat Bay (S.V.S). | 59 34 | 139 46 | 1880.48 | —30.00 | ------ | —28.35 | W. H. Dall and M. Baker. | C. and G. S. Rep., 1881, App. 9. |
| Coal Point, Ugolnoi Point. | 59 36 | 151 24 | 1880.50 | —25.81 | +1.27 | —24.54 | W. H. Dall and M. Baker. | C. and G. S. Rep., 1881, App. 9. |
| Port Etches, near Phipps Pt. (S.V.S.) | 60 21 | 146 38 | 1874.41 | —29.16 | ------ | —27.28 | W. H. Dall. | C. and G. S. Rep., 1881, App. 9. |
| Nunivak Isd., Cape Etonin. | 60 25 | 166 08 | 1874.58 | —21.56 | +1.53 | —20.03 | W. H. Dall. | C. and G. S. Rep., 1881, App. 9. |
| Near Point Spencer, Port Clarence (S. V. S.). | 65 16 | 166 51 | 1880.69 | —22.75 | ------ | —21.23 | W. H. Dall and M. Baker. | C. and G. S. Rep., 1881, App. 9. |
| Chamisso Harbor, Kotzebue Sound (S. V. S.). | 66 13 | 161 49 | 1880.66 | —26.82 | ------ | —25.21 | W. H. Dall and M. Baker. | C. and G. S. Rep., 1881, App. 9. |
| Near Cape Lisburne. | 68 53 | 166 06 | 1880.64 | —25.71 | +1.58 | -24.13 | W. H. Dall and M. Baker. | C. and G. S. Rep., 1881, App. 9. |
| Near Icy Cape. | 70 13 | 162 15 | 1880.65 | —30.10 | +1.58 | —28.52 | W. H. Dall and M. Baker. | C. and G. S. Rep., 1881, App. 9. |
| Uglaamie, U. S. Polar Research Station. | 71 18 | 156 40 | 1883.16 | —35.62 | +1.71 | —33.91 | P. H. Ray and others. | C. and G. S. Rep., 1883, App. 13. |

Group 2.

| | | | | | | | | |
|---|---|---|---|---|---|---|---|---|
| Peak of Iron Island, Chugul Island. | 51 58 | E. 178 23* | 1849.5 | —14.00 | +1.60 | —12.40 | M. D. Tebenkoff. | Chart XXIX. |
| Straits bet. Unalashka and Sedaghur. | 53 46 | 166 12 | 1789.5 | —19.50 | +0.52 | —18.98 | J. H. Cox. | Dalrymple's Charts. |

* E. indicates East longitude.

*Table of Observed Magnetic Declinations and Values reduced to the Year* 1890—Continued.

ALASKA—Continued.

| Name of station. | φ | λ | t | D | ΔD | $D_{1890.0}$ | Observer. | Reference. |
|---|---|---|---|---|---|---|---|---|
| | ° ′ | ° ′ | | ° | ° | ° | | |
| Croyalgu Island. | 54 17 | 164 47 | 1826.5 | —20,83 | +1.23 | —19.6 | F. W. Beechey. | Phil. Trans. Roy. Soc., 1872. |
| Bailey's Harbor, Belkoosky Bay. | 55 09 | 162 07 | 1879.5 | —21.13 | +0.59 | —20.54 | G. W. Bailey. | Rep. on Alaska. |
| Amok Island. | 55 27 | 164 02 | 1827.5 | —21.25 | +1.25 | —20.0 | F. P. Lütke. | Phil. Trans. Roy. Soc., 1872. |
| Wrangell Harbor. | 56 59 | 157 57 | 1827.5 | —24.00 | +2.26 | —21.74 | F. P. Lütke. | Phil. Trans. Roy. Soc., 1872. |
| Kodiac, near Cape Greville. | 57 20 | 152 51 | 1839.5 | —26.72 | +3.50 | —23.22 | E. Belcher. | Phil. Trans. Roy. Soc., 1843. |
| Cape Suwaroff. | 58 42 | 157 00 | 1827.5 | —26.25 | +2.25 | —24.0 | F. P. Lütke. | Phil. Trans. Roy. Soc., 1872. |
| Cape Black. | 58 43 | 162 05 | 1827.5 | —25.17 | +3.35 | —21.8 | F. P. Lütke. | Phil. Trans. Roy. Soc., 1872. |
| Cape Hinchinbrock, Port Etches. | 60 18 | 147 00 | 1787.5 | —27.00 | ------ | ------ | J. Johnstone. | Dalrymple's Charts. |
| Norton Sound. | 63 28 | 161 42 | 1827.5 | —30.50 | +5.55 | —24.95 | F. P. Lütke. | Phil. Trans. Roy. Soc., 1872. |
| Saint Lawrence Island. | 63 43 | 171 23 | 1879.6 | —19.08 | +1.64 | —17.44 | A. Wykander (Nordenskiöld). | Exp. of the "Vega," Stockholm, 1883. |
| Saint Michael, Norton Sound. | 63 48 | 161 00 | 1874.5 | —23.00 | +2.50 | —20.50 | L. M. Turner. | Sig. Off. Rep., 1876. |
| Port Clarence. | 65 17 | 166 30 | 1879.5 | —23.02 | +1.67 | —21.35 | A. Wykander (Nordenskiöld). | Exp. of the "Vega," Stockholm, 1883. |
| Bay of St. Lawrence. | 65 38 | 170 46 | 1828.5 | —24.07 | +5.65 | —18.42 | F. P. Lütke. | Phil. Trans. Roy. Soc., 1872. |
| Cape Good Hope. | 66 03 | 164 30 | 1826.5 | —29.47 | +5.60 | —23.87 | F. W. Beechey. | Phil. Trans. Roy. Soc., 1872. |
| Cape Deceit. | 66 06 | 162 36 | 1826.5 | —30.30 | +5.60 | —24.70 | F. W. Beechey. | Phil. Trans. Roy. Soc., 1872. |
| Fort Yukon. | 66 34 | 145 18 | 1869.62 | —36.54 | +3.5 | —33.0 | C. W. Raymond. | MS. in C. and G. S. Office. |
| Cape Krusenstern. | 67 11 | 163 37 | 1826.5 | —30.20 | +5.60 | —24.60 | F. W. Beechey. | Phil. Trans. Roy. Soc., 1872. |
| Point Demarcation. | 69 41 | 141 00 | 1837.54 | —48.38 | ------ | ------ | Th. Simpson. | Phil. Trans. Roy. Soc., 1872. |
| Point Anxiety. | 70 10 | 147 30 | 1837.55 | —45.00 | ------ | ------ | Th. Simpson. | Phil. Trans. Roy. Soc., 1872. |
| Foggy Island. | 70 16 | 147 38 | 1825.5 | —43.25 | ------ | ------ | J. Franklin. | Phil. Trans. Roy. Soc., 1872. |
| N. W. of Anxiety Point, on ice. | 70 31 | 148 34 | 1850.5 | —44.62 | ------ | ------ | R. J. LeM. McClure. | Phil. Trans. Roy. Soc., 1872. |
| Wainwright Inlet. | 70 35 | 160 36 | 1880.64 | —38.45 | +2.03 | —36.42 | C. L. Hooper. | MS. by W. H. Dall. |
| Wainwright Inlet. | 70 37 | 160 03 | 1849.5 | —36.68 | ------ | ------ | Henry Kellett. | Phil. Trans. Roy. Soc., 1872. |

*Table of Observed Magnetic Declinations and Values reduced to the Year* 1890—**Continued.**

ALASKA—Continued.

| Name of station. | φ | λ | t | D | ΔD | $D_{1890.0}$ | Observer. | Reference. |
|---|---|---|---|---|---|---|---|---|
| | ° ′ | ° ′ | | ° | ° | ° | | |
| Point Comfort. | 70 43 | 152 14 | 1837.57 | —43.13 | ------ | ------ | Th. Simpson. | Phil. Trans. Roy. Soc., 1872. |
| Boat Extreme. | 71 02 | 154 23 | 1837.58 | —42.60 | ------ | ------ | Th. Simpson. | Phil. Trans. Roy. Soc., 1872. |
| Plover Point, Pt. Barrow. | 71 21 | 156 16 | 1853.66 | —40.35 | ------ | —34.24 | R. Maguire. | Phil. Trans. Roy. Soc., Vol. 147, Part II, 1858 and 1872. |

ARIZONA TERRITORY.

Group 1.‡
Group 2.

| | | | | | | | | |
|---|---|---|---|---|---|---|---|---|
| Santa Cruz River. | 31 18 | 110 31 | 1855.4 | —11.75 | +0.06 | —11.69 | W. H. Emory. | Bd. Sur., Am. Acad. Sc., Vol. VI, 1856. |
| San Bernardino. | 31 20 | 109 14 | 1855.3 | —11.75 | +0.06 | —11.69 | W. H. Emory. | Bd. Sur., Am. Acad. Sc., Vol. VI, 1856. |
| Los Nogales. | 31 21 | 110 51 | 1855.5 | —12.22 | +0.06 | —12.16 | W. H. Emory. | Bd. Sur., Am. Acad. Sc., Vol. VI, 1856. |
| Fort Bowie. | 32 10 | 109 50 | 1873.5 | —13.80 | +0.23 | —13.57 | G. M. Wheeler. | Rep. Ch. of Eng's, 1879. |
| Fort Grant. | 32 37 | 110 40* | 1873.5 | —13.82 | +0.23 | —13.59 | W. T. Rossell. | Rep. Ch. of Eng's, 1876. |
| San Pedro River. | 32 43 | 110 34† | 1873.5 | —12.82 | +0.23 | —12.59 | S. E. Tillman. | Rep. Ch. of Eng's, 1876. |
| Gila Junction. | 32 43 | 114 33 | 1851.5 | —12.83 | —0.35 | —13.18 | W. H. Emory. | Bd. Sur., Am. Acad. Sc., Vol. VI, 1856. |
| Pueblo Vieja, Safford's P. O. | 32 49 | 109 37† | 1873.5 | —14.18 | +0.23 | —13.95 | S. E. Tillman. | Rep. Ch. of Eng's, 1876. |
| San Pedro. | 32 59 | 110 40 | 1851.5 | —12.42 | —0.04 | —12.46 | W. H. Emory. | Bd. Sur., Am. Acad. Sc., Vol. VI, 1856. |
| San Francisco River. | 33 02 | 109 17† | 1873.5 | —12.37 | +0.23 | —12.14 | R. L. Hoxie. | Rep. Ch. of Eng's, 1876. |
| Pimos Villages. | 33 07 | 111 44 | 1851.5 | —12.87 | —0.04 | —12.91 | W. H. Emory. | Bd. Sur., Am. Acad. Sc., Vol. VI, 1856. |
| Big Hills. | 33 23 | 109 55† | 1873.5 | —13.10 | +0.23 | —12.87 | S. E. Tillman. | Rep. Ch. of Eng's, 1876. |
| Prieto Crossing. | 33 34 | 109 55† | 1873.5 | —12.60 | +0.23 | —12.37 | S. E. Tillman. | Rep. Ch. of Eng's, 1876. |
| Camp Apache. | 33 47 | 109 57† | 1871.5 | —14.18 | +0.24 | —13.94 | D. W. Lockwood. | Rep. Ch. of Eng's, 1876. |
| Escudilla Peak. | 33 59 | 109 06† | 1873.5 | —12.55 | +0.23 | —12.32 | R. L. Hoxie. | Rep. Ch. of Eng's, 1876. |
| Williams River. | 34 13 | 113 33 | 1854.12 | —13.68 | —0.22 | —13.90 | J. C. Ives. | C. S. Rep., 1856. |

* Longitude doubtful. † Supplied, approximate value. ‡ No C. and G. S. stations.

*Table of Observed Magnetic Declinations and Values reduced to the Year* 1890—Continued.

ARIZONA TERRITORY—Continued.

| Name of station. | $\Phi$ | $\lambda$ | $t$ | D | $\Delta$D | $D_{1890.0}$ | Observer. | Reference. |
|---|---|---|---|---|---|---|---|---|
| | ° ′ | ° ′ | | ° | ° | ° | | |
| Williams River. | 34 17 | 113 26 | 1854.13 | —13.40 | —0.22 | —13.62 | J. C. Ives. | C. S. Rep., 1856. |
| Colorado River. | 34 23 | 114 06 | 1854.14 | —14.13 | —0.22 | —14.35 | J. C. Ives. | C. S. Rep., 1856. |
| Tule Springs. | 34 32 | 109 06* | 1873.5 | —13.61 | +0.23 | —13.38 | R. L. Hoxie. | Rep. Ch. of Eng's, 1876. |
| Williams River. | 34 32 | 113 28 | 1854.10 | —13.97 | —0.22 | —14.19 | J. C. Ives. | C. S. Rep., 1856. |
| Bouchês Fork. | 34 33 | 110 04* | 1871.5 | —14.86 | +0.24 | —14.62 | D. W. Lockwood. | Rep. Ch. of Eng's, 1876. |
| Williams River. | 34 36 | 113 28 | 1854.10 | —14.03 | —0.22 | —14.25 | J. C. Ives. | C. S. Rep., 1856. |
| Camp 130. | 34 36 | 114 16 | 1854.15 | —13.85 | —0.22 | —14.07 | J. C. Ives. | C. S. Rep., 1856. |
| Colorado River. | 34 45 | 114 24 | 1854.5 | —13.80 | —0.20 | —14.00 | J. C. Ives and A. W. Whipple. | Phil. Trans. Roy. Soc., 1874. |
| Camp 132. | 34 46 | 114 23 | 1854.15 | —13.60 | —0.22 | —13.82 | J. C. Ives. | C. S. Rep., 1856. |
| Deer Spring. | 34 50 | 109 04* | 1873.5 | —13.89 | +0.23 | —13.66 | R. L. Hoxie. | Rep. Ch. of Eng's, 1876. |
| Camp 135. | 34 52 | 114 32 | 1854.16 | —13.93 | —0.22 | —14.15 | J. C. Ives. | C. S. Rep., 1856. |
| Colorado Chiquito or Flax River. | 34 53 | 110 04 | 1853.93 | —13.70 | +0.02 | —13.68 | J. C. Ives. | C. S. Rep., 1856. |
| Rattlesnake Cañon. | 34 56 | 112 17* | 1871.5 | —14.70 | +0.24 | —14.46 | D. W. Lockwood. | Rep. Ch. of Eng's, 1876. |
| Pueblo Creek. | 34 56 | 112 46 | 1854.06 | —13.98 | —0.12 | —14.10 | J. C. Ives. | C. S. Rep., 1856. |
| Near Rio Puerco of the West. | 34 58 | 109 52 | 1853.92 | —14.00 | +0.02 | —13.98 | J. C. Ives. | C. S. Rep., 1856. |
| Williams River. | 34 59 | 112 57 | 1854.06 | —14.80 | —0.12 | —14.92 | J. C. Ives. | C. S. Rep., 1856. |
| Colorado Chiquito. | 35 00 | 110 25 | 1853.93 | —13.67 | +0.02 | —13.65 | J. C. Ives. | C. S. Rep., 1856. |
| Colorado Chiquito. | 35 01 | 110 30 | 1853.94 | —13.35 | +0.02 | —13.33 | J. C. Ives. | C. S. Rep., 1856. |
| Big Horse Spring. | 35 01 | 113 36 | 1854.09 | —14.30 | —0.22 | —14.52 | J. C. Ives. | C. S. Rep., 1856. |
| Near Lithodendron Creek. | 35 02 | 109 41 | 1853.92 | —13.55 | +0.02 | —13.53 | J. C. Ives. | C. S. Rep., 1856. |
| Camp Mohave. | 35 02 | 114 36 | 1875.7 | —14.75 | +0.15 | —14.60 | E. Bergland. | Rep. Ch. of Eng's, 1876. |
| Jacob's Well. | 35 04 | 109 14 | 1853.91 | —13.73 | +0.02 | —13.71 | J. C. Ives. | C. S. Rep., 1856. |
| Navajo Spring. | 35 06 | 109 20 | 1853.91 | —13.38 | +0.02 | —13.36 | J. C. Ives. | C. S. Rep., 1856. |
| Carriso Creek. | 35 06 | 109 32 | 1853.92 | —13.90 | +0.02 | —13.88 | J. C. Ives. | C. S. Rep., 1856. |
| Williams River. | 35 07 | 113 13 | 1854.08 | —13.67 | —0.22 | —13.89 | J. C. Ives. | C. S. Rep., 1856. |
| White Cliff Creek. | 35 08 | 113 31 | 1854.09 | —14.70 | —0.22 | —14.92 | J. C. Ives. | C. S. Rep., 1856. |
| Relief Springs, Lockwood Springs. | 35 09 | 112 10* | 1871.5 | —14.37 | +0.24 | —14.13 | D. W. Lockwood. | Rep. Ch. of Eng's, 1876. |
| Colorado Chiquito. | 35 12 | 110 37 | 1853.95 | —13.65 | +0.02 | —13.63 | J. C. Ives. | C. S. Rep., 1856. |
| Saroux Spring. | 35 17 | 111 39 | 1853.99 | —13.87 | +0.02 | —13.85 | J. C. Ives. | C. S. Rep., 1856. |
| Colorado Chiquito. | 35 18 | 110 53 | 1853.96 | —13.70 | +0.02 | —13.68 | J. C. Ives. | C. S. Rep., 1856. |
| Cedar Creek. | 35 21 | 112 20 | 1854.03 | —13.82 | —0.12 | —13.94 | J. C. Ives. | C. S. Rep., 1856. |
| Cañon Spring. | 35 45 | 113 50* | 1871.5 | —14.10 | +0.13 | —13.97 | D. W. Lockwood. | Rep. Ch. of Eng's, 1876. |

*Supplied, approximate value.

*Table of Observed Magnetic Declinations and Values reduced to the Year* 1890—Continued.

ARIZONA TERRITORY—Continued.

| Name of station. | $\varphi$ | $\lambda$ | $t$ | D | $\Delta$D | $D_{1890.0}$ | Observer. | Reference. |
|---|---|---|---|---|---|---|---|---|
| | ° ′ | ° ′ | | ° | ° | ° | | |
| Moencopie Cañon. | 36 08 | 111 08* | 1873.5 | —14.40 | +0.30 | —14.10 | R. L. Hoxie. | Rep. Ch. of Eng's, 1876. |
| Green Springs. | 36 11 | 111 17* | 1873.5 | —15.47 | +0.30 | —15.17 | R. L. Hoxie. | Rep. Ch. of Eng's, 1876. |
| Limestone Water Pocket. | 36 32 | 111 32* | 1873.5 | —15.26 | +0.30 | —14.96 | R. L. Hoxie. | Rep. Ch. of Eng's, 1876. |

*Supplied, approximate value.

ARKANSAS.

Group 1.*
Group 2.

| | | | | | | | | |
|---|---|---|---|---|---|---|---|---|
| Washita or Saline River. | 34 00 | 92 00 | 1804.5 | — 8.33 | ------ | ------ | W. Dunbar. | Sill. Jour., Vol. 34, 1838. |
| Isaac Creek. | 34 04 | 92 39 | 1870.3 | — 7.50 | +1.00 | — 6.50 | S. T. Abert. | MS. in C. and G. S. Office. |
| Little Rock. | 34 45 | 92 16 | 1875.38 | — 8.18 | +0.82 | — 7.36 | F. E. Hilgard. | Nat. Acad. Sc. |
| Blues Point. | 34 50 | 90 26 | 1879.17 | — 6.23 | +0.63 | — 5.60 | J. A. Ockerson. | P. P. U. S. Eng's, No. 24, 1882. |
| Williams Landing. | 34 50 | 92 30 | 1870.3 | — 7.27 | +1.00 | — 6.27 | S. T. Abert. | MS. in C. and G. S. Office. |
| Opposite Buck Isld. | 34 52 | 90 20 | 1879.14 | — 6.57 | +0.63 | — 5.94 | J. Eisenmann. | P. P. U. S. Eng's, No. 24, 1882. |
| Scanlan's Landing. | 35 02 | 90 16 | 1878.06 | — 6.95 | +0.70 | — 6.25 | C. F. Powell. | Rep. Ch. of Eng's, 1878. |
| Stout's Landing. | 35 07 | 92 50 | 1870.3 | — 7.73 | +1.00 | — 6.73 | S. T. Abert. | MS. in C. and G. S. Office. |
| Hog Thief Bend. | 35 17 | 93 03 | 1870.3 | — 8.32 | +1.00 | — 7.32 | S. T. Abert. | MS. in C. and G. S. Office. |
| Delaware Creek. | 35 17 | 93 15 | 1870.3 | — 8.42 | +1.00 | — 7.42 | S. T. Abert. | MS. in C. and G. S. Office. |
| Shoal Creek. | 35 20 | 93 25 | 1870.3 | — 8.50 | +1.00 | — 7.50 | S. T. Abert. | MS. in C. and G. S. Office. |
| Roseville. | 35 22 | 93 47 | 1870.3 | — 8.83 | +1.00 | — 7.83 | S. T. Abert. | MS. in C. and G. S. Office. |
| Profile Rock. | 35 23 | 93 31 | 1870.3 | — 8.57 | +1.00 | — 7.57 | S. T. Abert. | MS. in C. and G. S. Office. |
| Fort Smith. | 35 23 | 94 26 | 1878.5 | — 8.83 | +0.67 | — 8.16 | C. R. Sutter and D. W. Wellman. | Rep. Ch. of Eng's, 1878. |
| Earn's Landing. | 35 27 | 94 04 | 1870.3 | — 9.00 | +1.00 | — 8.00 | S. T. Abert. | MS. in C. and G. S. Office. |
| Buffalo, White River. | 36 12 | 92 30 | 1878.5 | — 8.00 | +0.67 | — 7.33 | C. R. Sutter and D. W. Wellman. | Rep. Ch. of Eng's, 1878. |

*No C. and G. S. stations.

*Table of Observed Magnetic Declinations and Values reduced to the Year* 1890—Continued.

CALIFORNIA.

Group I.

| Name of station. | φ | λ | t | D | ΔD | $D_{1890.0}$ | Observer. | Reference. |
|---|---|---|---|---|---|---|---|---|
| | ° ′ | ° ′ | | ° | ° | ° | | |
| San Diego, La Playa (S. V. S.). | 32 42 | 117 15 | 1881.26 | —13.46 | ------ | —13.29 | H. E. Nichols. | C. and G. S. Rep., 1881, App. 9. |
| San Diego, new town (S. V. S.). | 32 43 | 117 10 | 1871.41 | —14.78 | | | G. Davidson. | C. and G. S. Rep., 1881, App. 9. |
| San Pedro. | 33 44 | 118 17 | 1881.28 | —14.45 | +0.04 | —14.41 | H. E. Nichols. | C. and G. S. Rep., 1881, App. 9. |
| Dominguez Hill. | 33 52 | 118 14 | 1870.18 | —15.35 | —0.09 | —15.44 | S. R. Throckmorton (G. Davidson). | C. and G. S. Rep., 1881, App. 9. |
| Los Angeles, U. S. Magnetic Observatory. | 34 03 | 118 15 | 1889.38 | —14.41 | 0.00 | —14.41 | R. E. Halter. | MS. in C. and G. S. Office. |
| San Buenaventura. | 34 16 | 119 16 | 1870.05 | —15.13 | 0.00 | —15.13 | S. R. Throckmorton (G. Davidson). | C. and G. S. Rep., 1881, App. 9. |
| Santa Barbara (S. V. S.). | 34 25 | 119 42 | 1881.28 | —14.86 | ------ | —14.78 | H. E. Nichols. | C. and G. S. Rep., 1881, App. 9. |
| Point Conception. | 34 27 | 120 27 | 1872.93 | —14.86 | +0.03 | —14.83 | S. R. Throckmorton. | C. and G. S. Rep., 1881, App. 9. |
| San Luis Obispo. | 35 11 | 120 44 | 1881.29 | —15.61 | —0.03 | —15.64 | H. E. Nichols. | C. and G. S. Rep., 1881, App. 9. |
| Mount Toro. | 36 32 | 121 36 | 1885.08 | —15.95 | —0.06 | —16.01 | F. Morse (G. Davidson). | MS. in C. and G. S. Office. |
| Monterey (S. V. S.). | 36 36 | 121 54 | 1881.30 | —15.90 | ------ | —16.04 | H. E. Nichols. | C. and G. S. Rep., 1881, App. 9. |
| Point Pinos. | 36 38 | 121 56 | 1873.66 | —15.92 | | | S. R. Throckmorton. | C. and G. S. Rep., 1881, App. 9. |
| Loma Prieta or Mt. Bache. | 37 07 | 121 51 | 1884.18 | —16.10 | —0.05 | —16.15 | R. A. Marr (G. Davidson). | MS. in C. and G. S. Office. |
| Mt. Hamilton, near Lick Observatory. | 37 20 | 121 38 | 1888.83 | —15.84 | —0.01 | —15.85 | R. A. Marr. | MS. in C. and G. S. Office. |
| Sierra Morena. | 37 24 | 122 18 | 1884.03 | —16.64 | —0.05 | —16.69 | R. A. Marr (G. Davidson). | MS. in C. and G. S. Office. |
| Mocho. | 37 29 | 121 33 | 1887.66 | —16.59 | —0.01 | —16.60 | F. Morse (G. Davidson). | MS. in C. and G. S. Office. |
| Presidio, San Francisco (S. V. S.). | 37 48 | 122 27 | 1889.31 | —16.60 | ------ | —16.58 | F. Morse (G. Davidson). | MS. in C. and G. S. Office. |
| Mount Diablo. | 37 53 | 121 55 | 1884.91 | —16.71 | —0.02 | —16.73 | R. A. Marr (G. Davidson). | MS. in C. and G. S. Office. |
| Mount Tamalpais (Table Mtn.). | 37 55 | 122 36 | 1879.84 | —16.00 | —0.07 | —16.07 | E. Hergesheimer. | C. and G. S. Rep., 1881, App. 9. |
| Punta de los Reyes. | 38 00 | 122 59 | 1853.1 | —15.58 | —0.43 | —16.01 | G. Davidson and J. S. Lawson. | C. and G. S. Rep., 1881, App. 9. |
| Mare Island Navy-Yard. | 38 06 | 122 16 | 1887.28 | —17.13 | —0.01 | —17.14 | C. C. Marsh (C. M. Thomas). | MS. in C. and G. S. Office. |
| Tomales Bay. | 38 11 | 122 57 | 1857.10 | —16.01 | —0.56 | —16.57 | G. Davidson. | C. and G. S. Rep., 1881, App. 9. |

*Table of Observed Magnetic Declinations and Values reduced to the Year* 1890—Continued.

CALIFORNIA—Continued.

| Name of station. | $\varphi$ | $\lambda$ | $t$ | D | $\Delta$D | $D_{1890.0}$ | Observer. | Reference. |
|---|---|---|---|---|---|---|---|---|
| | ° ′ | ° ′ | | ° | ° | ° | | |
| Bodega. | 38 18 | 123 00 | 1860.56 | —16.31 | —0.46 | —16.77 | G. Davidson. | C. and G. S. Rep., 1881, App. 9. |
| Vaca. | 38 22 | 122 05 | 1880.89 | —17.19 | —0.06 | —17.25 | E. F. Dickins (G. Davidson). | C. and G. S. Rep., 1881, App. 9. |
| Ross Mountain. | 38 30 | 123 07 | 1860.04 | —16.39 | —0.37 | —16.76 | G. Davidson. | C. and G. S. Rep., 1881, App. 9. |
| Sacramento. | 38 36 | 121 30 | 1889.03 | —15.88 | 0.00 | —15.88 | R. A. Marr. | MS. in C. and G. S. Office. |
| Monticello. | 38 40 | 122 11 | 1880.77 | —17.21 | —0.03 | —17.24 | J. J. Gilbert (G. Davidson). | C. and G. S. Rep., 1881, App. 9. |
| Lake Tahoe. | 38 55 | 120 05 | 1879.72 | —16.80 | —0.04 | —16.84 | E. Hergesheimer. | C. and G. S. Rep., 1881, App. 9. |
| Point Arena. | 38 55 | 123 42 | 1889.12 | —17.21 | 0.00 | —17.21 | R. A. Marr. | MS. in C. and G. S. Office. |
| Marysville. | 39 09 | 121 35 | 1889.15 | —16.42 | 0.00 | —16.42 | R. A. Marr. | MS. in C. and G. S. Office. |
| Blue Cañon. | 39 15 | 120 47 | 1881.27 | —15.64 | —0.03 | —15.67 | W. Eimbeck and R. A. Marr. | C. and G. S. Rep., 1881, App. 9. |
| Cape Mendocino (S. V. S.). | 40 26 | 124 24 | 1886.27 | —18.01 | ------ | —17.69 | F. Morse (G. Davidson). | MS. in C. and G. S. Office. |
| Humboldt, Red Bluff. | 40 45 | 124 13 | 1854.33 | —17.08 | —0.40 | —17.48 | G. Davidson and A. Tod. | C. and G. S. Rep., 1881, App. 9. |
| Bucksport. | 40 47 | 124 12 | 1853.55 | —17.11 | —0.42 | —17.53 | G. Davidson. | C. and G. S. Rep., 1881, App. 9. |
| Eureka. | 40 48 | 124 10 | 1871.58 | —18.71 | —0.06 | —18.77 | G. Davidson. | C. and G. S. Rep., 1881, App. 9. |

Group 2.

| | | | | | | | | |
|---|---|---|---|---|---|---|---|---|
| Camp Riley. | 32 36 | 117 05 | 1849.5 | —12.95 | —0.58 | —13.53 | W. H. Emory. | Bd. Sur., Am. Acad. Sc., Vol. VI, 1856. |
| La Playa, San Diego (S. V. S.). | 32 42 | 117 14 | 1888.46 | —13.07 | ------ | —13.29 | C. F. Pond (F. A. Cook). | U. S. S. *Ranger;* Hyd. Not. No. 41, 1888. |
| Fort Yuma. | 32 44 | 114 36 | 1876.2 | —13.77 | 0.00 | —13.77 | E. Bergland. | Rep. Ch. of Eng's, 1876. |
| San Isabel. | 33 09 | 116 38 | 1852.5 | —12.57 | —0.46 | —13.03 | W. H. Emory. | Bd. Sur., Am. Acad. Sc., Vol. VI, 1856. |
| Old Fort Tejon. | 34 52 | 118 55 | 1875.5 | —14.91 | +0.04 | —14.87 | G. M. Wheeler. | Rep. Ch. of Eng's, 1876. |
| Soda Lake. | 35 03 | 115 59 | 1854.18 | —13.85 | —0.38 | —14.23 | J. C. Ives. | C. S. Rep., 1856. |
| Pai-ute Creek. | 35 06 | 114 54 | 1854.17 | —14.28 | —0.38 | —14.66 | J. C. Ives. | C. S. Rep., 1856. |
| Tchachipai Valley. | 35 07 | 118 28 | 1875.5 | —14.20 | +0.04 | —14.16 | A. W. Whipple. | Rep. Ch. of Eng's, 1876. |

*Table of Observed Magnetic Declinations and Values reduced to the Year* 1890—Continued.

CALIFORNIA—Continued.

| Name of station. | φ | λ | t | D | D | $D_{1890.0}$ | Observer. | Reference. |
|---|---|---|---|---|---|---|---|---|
| | ° ′ | ° ′ | | ° | ° | ° | | |
| Forks, Los Angeles and Caliente roads. | 35 08 | 118 09 | 1875.5 | —14.80 | +0.04 | —14.76 | R. Birnie. | Rep. Ch of Eng's, 1876. |
| Near Mare Springs. | 35 11 | 115 33 | 1854.18 | —13.98 | —0.38 | —14.36 | J. C. Ives. | C. S. Rep., 1856. |
| Desert Springs. | 35 18 | 117 57 | 1871.5 | —15.52 | +0.01 | —15.51 | D. W. Lockwood. | Rep. Ch. of Eng's, 1876. |
| Indian Wells. | 35 40 | 117 53 | 1875.5 | —15.21 | —0.06 | —15.27 | (Eng'r Officer). | Tab. Geog. Pos. U. S. Eng's, 1883. |
| Saratoga Springs. | 35 41 | 116 10* | 1871.5 | —15.08 | —0.12 | —15.20 | D. W. Lockwood. | Rep. Ch. of Eng's, 1876. |
| Saratoga Springs. | 35 41 | 116 26 | 1875.5 | —15.08 | —0.06 | —15.14 | (Eng'r Officer). | Tab. Geog. Pos. U. S. Eng's, 1883. |
| Penamint Valley, Station A. | 36 05 | 117 14 | 1875.5 | —15.18 | —0.06 | —15.24 | R. Birnie. | Rep. Ch. of Eng's, 1876. |
| Wild Rose Spring. | 36 16 | 117 12 | 1875.5 | —15.32 | —0.06 | —15.38 | R. Birnie. | Rep. Ch. of Eng's, 1876. |
| Passmore Post-Office. | 36 17 | 118 00 | 1875.5 | —14.90 | —0.06 | —14.96 | (Eng'r Officer). | Tab. Geog. Pos. U. S. Eng's, 1883. |
| Furnace Creek. | 36 26 | 116 51 | 1875.5 | —15.69 | —0.06 | —15.75 | R. Birnie. | Rep. Ch. of Eng's, 1876. |
| Cerro Gordo Landing. | 36 28 | 117 51 | 1875.5 | —15.31 | —0.06 | —15.37 | R. Birnie. | Rep. Ch. of Eng's, 1876. |
| Lone Pine Camp. | 36 36 | 118 04 | 1875.5 | —15.33 | —0.06 | —15.39 | (Eng'r Officer). | Tab. Geog. Pos. U. S. Eng's, 1883. |
| Camp Independence. | 36 50 | 118 13 | 1871.5 | —15.56 | —0.16 | —16.72 | (Eng'r Officer). | Tab. Geog. Pos. U. S. Eng's, 1883. |
| New York of the Pacific. | 38 03 | 121 49 | 1850.0 | —15.70 | —0.79 | —16.49 | (Chart). | C. Ringold, U. S. N. |
| Opposite Mare Island Navy-Yard. | 38 06 | 122 16 | 1888.8 | —17.23 | 0.00 | —17.23 | G. F. F. Wilde. | MS. in C. & G. S. Office. |
| Suisun City. | 38 11 | 121 37 | 1850.0 | —15.68 | —0.79 | —16.47 | (Chart). | C. Ringold, U. S. N. |
| Barber's. | 38 19 | 121 30 | 1850.0 | —16.33 | —0.79 | —17.12 | (Chart). | C. Ringold, U. S. N. |
| Fort Rumantsoff or Bodega Head. | 38 19 | 122 43 | 1818.7 | —16.50 | —2.10 | —18.60 | V. M. Golovnin. | Voyage, Vol. 2, St. Petersburg, 1822. |
| Armstrong's Ranch. | 38 50 | 119 47 | 1877.0 | —16.75 | —0.11 | —16.86 | (Eng'r Officer). | Tab. Geog. Pos. U. S. Eng's, 1883. |
| Yanks Landing, Lake Tahoe. | 38 56 | 120 03 | 1876.5 | —15.85 | —0.07 | —15.92 | (Eng'r Officer). | Tab. Geog. Pos. U. S. Eng's, 1883. |
| Boundary Monument, SE. shore Lake Tahoe. | 38 57 | 119 57 | 1876.5 | —15.85 | —0.07 | —15.92 | (Eng'r Officer). | Tab. Geog. Pos. U. S. Eng's, 1883. |
| Rowland's, Lake Tahoe. | 38 57 | 119 59 | 1876.5 | —15.85 | —0.07 | —15.92 | (Eng'r Officer). | Tab. Geog. Pos. U. S. Eng's, 1883. |
| Rubicon Point, Lake Tahoe. | 39 00 | 120 06 | 1876.5 | —15.62 | —0.07 | —15.69 | (Eng'r Officer). | Tab. Geog. Pos. U. S. Eng's, 1883. |

*Longitude doubtful; next station possibly a duplicate.

*Table of Observed Magnetic Declinations and Values reduced to the Year* 1890—Continued.

CALIFORNIA—Continued.

| Name of station. | φ | λ | t | D | ΔD | $D_{1890.0}$ | Observer. | Reference. |
|---|---|---|---|---|---|---|---|---|
| | ° ′ | ° ′ | | ° | ° | ° | | |
| Lusks, Lake Tahoe. | 39 02 | 120 07 | 1876.5 | —15.62 | —0.07 | —15.69 | (Eng'r Officer). | Tab. Geog. Pos. U. S. Eng's, 1883. |
| Boundary Monument, N. shore Lake Tahoe. | 39 13 | 120 00 | 1876.5 | —15.85 | —0.07 | —15.92 | (Eng'r Officer). | Tab. Geog. Pos. U. S. Eng's, 1883. |
| Hot Springs, Lake Tahoe. | 39 14 | 120 01 | 1876.5 | —18.02* | ------ | ------ | (Eng'r Officer). | Tab. Geog. Pos. U. S. Eng's, 1883. |
| Cisco. | 39 19 | 120 33 | 1877.5 | —17.18 | —0.06 | —17.24 | J. N. Macomb. | Rep. Ch. of Eng's, 1878. |
| Shelter Cove. | 40 03 | 124 09 | 1792.30 | —15.00 | —2.92 | —17.92 | G. Vancouver. | Hansteen's Mag. der Erde, 1819. |
| Susanville. | 40 25 | 120 40 | 1877.5 | —18.35 | —0.02 | —18.37 | (Eng'r Officer). | Tab. Geog. Pos., U. S. Eng's, 1883. |
| Trinidad. | 41 07 | 126 36 | 1841.5 | —16.00 | —0.78 | —16.78 | Duflot de Mofras. | Expl. of Oregon, 1844. |
| Camp Bidwell. | 41 52 | 120.09 | 1877.5 | —17.88 | —0.02 | —17.90 | T. W. Symons. | Rep. Ch. of Eng's, 1878. |

*Local deflection.

COLORADO.

Group 1.

| | | | | | | | | |
|---|---|---|---|---|---|---|---|---|
| Trinidad. | 37 10 | 104 30 | 1888.86 | —13.78 | +0.06 | —13.72 | J. B. Baylor. | MS. in C. & G. S. Office. |
| West Las Animas. | 38 04 | 103 01 | 1888.81 | —13.00 | +0.06 | —12.94 | J. B. Baylor. | MS. in C. & G. S. Office. |
| North Pueblo. | 38 18 | 104 37 | 1888.84 | —13.21 | +0.05 | —13.16 | J. B. Baylor. | MS. in C. & G. S. Office. |
| Gunnison. | 38 33 | 106 56 | 1886.46 | —14.72 | +0.15 | —14.57 | E. Smith. | MS. in C. & G. S. Office. |
| Colorado Springs. | 38 50 | 104 49 | 1886.52 | —14.39 | +0.15 | —14.24 | E. Smith. | MS. in C. & G. S. Office. |
| Grand Junction. | 39 04 | 108 34 | 1886.58 | —14.88 | +0.14 | —14.74 | E. Smith. | MS. in C. & G. S. Office. |
| Denver (S. V. S.). | 39 45 | 105 00 | 1888.83 | —14.10 | ------ | —14.06 | J. B. Baylor. | MS. in C. & G. S. Office. |
| Greeley. | 40 26 | 104 40 | 1878.69 | —14.56 | +0.51 | —14.05 | J. B. Baylor. | C. & G. S. Rep. 1881, App. 9. |

Group 2*.

| | | | | | | | | |
|---|---|---|---|---|---|---|---|---|
| La Costilla. | 37 00 | 105 30 | 1872.13 | —14.43 | +0.82 | —13.61 | C. J. Moore. | MS. in C. & G. S. Office. |
| Colonas Ferry, Rio Grande. | 37 05 | 105 45 | 1877.5 | —11.07 | +0.57 | —10.50 | (Eng'r Officer). | Tab. Geo. Pos. U. S. Eng's, 1883. |

* The greater part of the longitudes were assigned by me; they are approximate values.—[SCH.]

*Table of Observed Magnetic Declinations and Values reduced to the Year* 1890—Continued.

COLORADO—Continued.

| Name of station. | φ | λ | t | D | ΔD | $D_{1890.0}$ | Observer. | Reference. |
|---|---|---|---|---|---|---|---|---|
| | ° ′ | ° ′ | | ° | ° | ° | | |
| Purgatoire River, head of North Fork. | 37 18 | 104 19 | 1873.5 | —14.38 | +0.69 | —13.69 | W. L. Marshall. | Rep. Ch. of Eng's, 1876. |
| San Juan River, head of East Fork. | 37 23 | 106 46 | 1874.5 | —14.97 | +0.67 | —14.30 | W. L. Marshall. | Rep. Ch. of Eng's, 1876. |
| Fort Garland. | 37 26 | 105 26 | 1873.5 | —14.12 | +0.69 | —13.4[illegible] | W. L. Marshall. | Rep. Ch. of Eng's, 1876. |
| San Juan River. | 37 26 | 106 47 | 1874.5 | —15.02 | +0.67 | —14.3[illegible] | W. L. Marshall. | Rep. Ch. of Eng's, 1876. |
| East Boundary, 173d. Station. | 37 30 | 102 03 | 1872.9 | —12.50 | +0.71 | —11.79 | J. J. Major. | Rep. General Land Office. |
| Cucharas River. | 37 30 | 105 01 | 1873.5 | —14.01 | +0.69 | —13.32 | W. L. Marshall. | Rep. Ch. of Eng's, 1876. |
| Dolores River. | 37 31 | 108 04 | 1874.5 | —14.00 | +0.67 | —13.33 | A. W. Whipple. | Rep. Ch. of Eng's, 1876. |
| La Veta Creek. | 37 32 | 105.03 | 1873.5 | —14.12 | +0.69 | —13.43 | W. L. Marshall. | Rep. Ch. of Eng's, 1876. |
| La Loma. | 37 41 | 106 14 | 1873.5 | —14.88 | +0.69 | —14.19 | W. L. Marshall. | Rep. Ch. of Eng's, 1876. |
| Simpson's Peak Camp. | 37 41 | 107 22 | 1874.5 | —14.50 | +0.67 | —13.83 | W. L. Marshall. | Rep. Ch. of Eng's, 1876. |
| Diana Creek. | 37 42 | 107 48 | 1874.5 | —14.53 | +0.67 | —13.86 | W. L. Marshall. | Rep. Ch. of Eng's, 1876. |
| Rio Grande. | 37 45 | 107 27 | 1874.5 | —14.83 | +0.67 | —14.16 | W. L. Marshall. | Rep. Ch. of Eng's, 1876. |
| East Boundary, 154th. Station. | 37 47 | 102 03 | 1872.9 | —13.00 | +0.71 | —12.29 | J. J. Major. | Rep. General Land Office. |
| Dolores River. | 37 47 | 107 57 | 1874.5 | —14.16 | +0.67 | —13.49 | A. W. Whipple. | Rep. Ch. of Eng's, 1876. |
| San Juan Mines. | 37 50 | 107 35 | 1873.5 | —14.64 | +0.69 | —13.95 | W. L. Marshall. | Rep. Ch. of Eng's, 1876. |
| La Junta, near Eclipse Station. | 37 59 | 103 33 | 1878.58 | —14.06 | +0.52 | —13.54 | T. E. Thorpe. | Proc. Roy. Soc., 1880. |
| Wet Mountain Valley. | 38 02 | 105 25 | 1873.5 | —14.33 | +0.69 | —13.64 | W. L. Marshall. | Rep. Ch. of Eng's, 1876. |
| Saguache, Craig's Ranch. | 38 02 | 106 37 | 1873.5 | —14.58 | +0.69 | —13.89 | W. L. Marshall. | Rep. Ch. of Eng's, 1876. |
| East Boundary, 130th. Station. | 38 08 | 102 03 | 1872.9 | —13.08 | +0.71 | —12.37 | J. J. Major. | Rep. General Land Office. |
| Fort Lyon. | 38 08 | 102 50 | 1866.5 | —14.50 | +0.88 | —13.62 | J. Prince. | MS. in C. & G. S. Office. |
| Los Pinos, Indian Agency. | 38 12 | 106 49 | 1874.5 | —14.83 | +0.67 | —14.16 | W. L. Marshall. | Rep. Ch. of Eng's, 1876. |
| East Boundary, 123d. Station. | 38 15 | 102 03 | 1872.9 | —13.17 | +0.71 | —12.46 | J. J. Major. | Rep. General Land Office. |

*Table of Observed Magnetic Declinations and Values reduced to the Year* 1890—**Continued.**

COLORADO—Continued.

| Name of station. | φ | λ | t | D | ΔD | $D_{1890.0}$ | Observer. | Reference. |
|---|---|---|---|---|---|---|---|---|
| | ° ′ | ° ′ | | ° | ° | ° | | |
| Hayden Creek. | 38 20 | 105 47 | 1874.5 | −14.09 | +0.67 | −13.42 | W. L. Marshall. | Rep. Ch. of Eng's, 1876. |
| East Boundary, 111th. Station. | 38 25 | 102 03 | 1872.8 | −13.50 | +0.72 | −12.78 | J. J. Major. | Rep. General Land Office. |
| Arkansas River. | 38 28 | 105 51 | 1873.5 | −14.68 | +0.69 | −13.99 | W. L. Marshall. | Rep. Ch. of Eng's, 1876. |
| Currant Creek. | 38 40 | 105 30 | 1873.5 | −14.40 | +0.69 | −13.71 | W L. Marshall. | Rep. Ch. of Eng's, 1876. |
| High Creek. | 38 41 | 105 18 | 1873.5 | −15.01 | +0.69 | −14.32 | W. L. Marshall. | Rep. Ch. of Eng's, 1876. |
| Buffalo Slough. | 38 48 | 105 42 | 1873.5 | −14.41 | +0.69 | −13.72 | W. L. Marshall. | Rep. Ch. of Eng's, 1876. |
| East Boundary, 68th. Station. | 39 01 | 102 03 | 1872.8 | −13.50 | +0.72 | −12.78 | J. J. Major. | Rep. General Land Office. |
| Fair-play. | 39 14 | 106 00 | 1879.5 | −14.43 | +0.49 | −13.94 | (Engineer Officer). | Tab. Geo. Pos. U. S. Eng's, 1883. |
| East Boundary, 40th. Station. | 39 26 | 102 03 | 1872.8 | −13.58 | +0.72 | −12.86 | J. J. Major. | Rep. General Land Office. |
| East Boundary, 7th. Station. | 39 52 | 102 03 | 1872.8 | −14.08 | +0.72 | −13.36 | J. J. Major. | Rep. General Land Office. |
| East Boundary, 6th. Station. | 39 54 | 102 03 | 1872.8 | −14.00 | +0.72 | −13.28 | J. J. Major. | Rep. General Land Office. |
| East Boundary, 3d. Station. | 39 57 | 102 03 | 1872.8 | −14.00 | +0.72 | −13.28 | J. J. Major. | Rep. General Land Office. |
| East Boundary of Colo. | 39 59 | 102 03 | 1872.82 | −14.17 | +0.72 | −13.45 | J. J. Major. | Rep. General Land Office. |
| North Boundary of Colo. | 41 00 | 105 00 | 1866.5 | −15.25 | +0.88 | −14.37 | J. Prince. | MS. in C. & G. S. Office. |

CONNECTICUT. Group I.

| | | | | | | | | |
|---|---|---|---|---|---|---|---|---|
| Stamford. | 41 04 | 73 32 | 1844.70 | + 6.60 | +2.64 | + 9.24 | J. Renwick. | C. and G. S. Rep., 1881, App. 9. |
| Norwalk. | 41 07 | 73 25 | 1844.70 | + 6.82 | +2.64 | + 9.46 | J. Renwick. | C. and G. S. Rep., 1881, App. 9. |
| Black Rock. | 41 09 | 73 13 | 1845.72 | + 6.89 | +2.82 | + 9.71 | J. Renwick. | C. and G. S. Rep., 1881, App. 9. |
| Bridgeport. | 41 10 | 73 11 | 1845.71 | + 6.32 | +2.82 | + 9.14 | J. Renwick. | C. and G. S. Rep., 1881, App. 9. |
| Milford. | 41 14 | 73 04 | 1845.72 | + 6.64 | +2.82 | + 9.46 | J. Renwick. | C. and G. S. Rep., 1881, App. 9. |
| Saybrook. | 41 16 | 72 21 | 1845.63 | + 6.83 | +2.94 | + 9.77 | J. Renwick. | C. and G. S. Rep., 1881, App. 9. |
| Tashua. | 41 16 | 73 15 | 1863.69 | + 8.04 | +1.64 | + 9.68 | G. W. Dean and S. H. Lyman (A. D. Bache). | C. and G. S. Rep., 1881, App. 9. |

*Table of Observed Magnetic Declinations and Values reduced to the Year* 1890—Continued.

CONNECTICUT—Continued.

| Name of station. | $\varphi$ | $\lambda$ | $t$ | D | D$\Delta$ | $D_{1890.0}$ | Observer. | Reference. |
|---|---|---|---|---|---|---|---|---|
| | ° ′ | ° ′ | | ° | ° | ° | | |
| Sachem's Head. | 41 17 | 72 44 | 1845.64 | + 6.25 | +3.02 | + 9.27 | J. Renwick. | C. and G. S. Rep., 1881, App. 9. |
| Fort Wooster. | 41 17 | 72 54 | 1848.64 | + 7.42 | +3.00 | +10.42 | J. S. Ruth. | C. and G. S. Rep., 1881, App. 9. |
| Oyster Point. | 41 17 | 72 56 | 1855.63 | + 7.04 | ------ | + 9.52 | C. A. Schott. | C. and G. S. Rep., 1881, App. 9. |
| New Haven Pavilion. | 41 18 | 72 55 | 1848.61 | + 6.63 | ------ | + 9.52 | J. S. Ruth. | C. and G. S. Rep., 1881, App. 9. |
| New Haven, Yale College (S.V.S.). | 41 18 | 72 56 | 1844.66 | + 5.75 | ------ | + 9.52 | J. Renwick. | C. and G. S. Rep., 1881, App. 9. |
| New London, Groton Pt. | 41 18 | 72.00 | 1845.62 | + 7.49 | +2.64 | +10.13 | J. Renwick. | C. and G. S. Rep., 1881, App. 9. |
| Stonington. | 41 20 | 71 54 | 1845.60 | + 7.64 | +2.64 | +10.28 | J. Renwick. | C. and G. S. Rep., 1881, App. 9. |
| Wooster. | 41 21 | 73 29 | 1864.59 | + 7.63 | +1.52 | + 9.15 | R. E. Halter (A. D. Bache). | C. and G. S. Rep., 1881, App. 9. |
| Sandford. | 41 28 | 72 57 | 1862.77 | + 7.03 | +1.82 | + 8.85 | E. Goodfellow (A. D. Bache). | C. and G. S. Rep., 1881, App. 9. |
| Hartford (S. V. S.). | 41 46 | 72 40 | 1879.56 | + 8.57 | ------ | + 9.22 | J. B. Baylor. | C. and G. S. Rep., 1881, App. 9. |
| Box Hill. | 41 48 | 72 27 | 1861.79 | + 8.51 | +1.72 | +10.23 | G. W. Dean, R. E. Halter (A. D. Bache). | C. and G. S. Rep., 1881, App. 9. |
| Ivy. | 41 52 | 73 14 | 1863.58 | + 8.43 | +1.67 | +10.10 | G. W. Dean, S. H. Lyman (A. D. Bache). | C. and G. S. Rep., 1881, App. 9. |
| Bald Hill. | 41 58 | 72 12 | 1861.71 | + 8.84 | +1.72 | +10.56 | G. W. Dean, R. E. Halter (A. D. Bache). | C. and G. S. Rep., 1881, App. 9. |

Group 2.

| | | | | | | | | |
|---|---|---|---|---|---|---|---|---|
| Double Beach. | 41 14 | 72 51 | 1884.55 | + 9.43 | +0.36 | + 9.79 | O. T. Sherman. | Rep. Board of Man., Yale Coll. Obs., 1884–'85. |
| South End. | 41 14 | 72 53 | 1884.55 | + 8.77 | +0.36 | + 9.13 | O. T. Sherman. | Rep. Board of Man., Yale Coll. Obs., 1884–'85. |
| Lyme. | 41 18 | 72 17 | 1810.5 | + 4.50 | +4.70 | + 9.20 | A. Miller. | Sill. Jour., Vol. 34, 1838. |
| Yale College (S.V.S.). | 41 19 | 72 56 | 1885.3 | + 9.00 | ------ | + 9.52 | O. T. Sherman. | Rep. Board of Man., Yale Coll. Obs., 1884–'85. |

*Table of Observed Magnetic Declinations and Values reduced to the Year* 1890—**Continued.**

CONNECTICUT—Continued.

| Name of station. | φ | λ | t | D | ΔD | $D_{1890.0}$ | Observer. | Reference. |
|---|---|---|---|---|---|---|---|---|
| | ° ′ | ° ′ | | ° | ° | ° | | |
| Danbury. | 41 22 | 73 23 | 1810.5 | + 5.68 | +4.34 | +10.02 | A. Miller. | Sill. Jour., Vol. 34, 1838. |
| Centerville. | 41 23 | 72 54 | 1884.59 | + 9.10 | +0.36 | + 9.46 | O. T. Sherman. | Rep. Board of Man., Yale Coll. Obs., 1884–'85. |
| Hebron. | 41 38 | 72 18 | 1835.5 | + 6.00 | +3.58 | + 9.58 | G. Gillet. | Sill. Jour., Vol. 34, 1838. |
| East Hartford. | 41 46 | 72 38* | 1810.5 | + 4.77 | +3.97 | + 8.74 | A. Miller. | Sill. Jour., Vol. 34, 1838. |
| Above Hartford. | 41 48 | 72 39 | 1875.0 | + 9.04 | +0.92 | + 9.96 | T. C. Ellis. | Rep. Ch. of Eng's, 1878. |
| Pomfret. | 41 52 | 71 57 | 1810.5 | + 5.08 | +4.67 | + 9.75 | A. Miller. | Sill. Jour., Vol. 34, 1838. |
| Above Hartford. | 41 58 | 72 38 | 1875.0 | + 9.22 | +0.92 | +10.14 | T. C. Ellis. | Rep. Ch. of Eng's, 1878. |

* Corrected.

DELAWARE. Group 1.

| | | | | | | | | |
|---|---|---|---|---|---|---|---|---|
| Dagsborough. | 38 35 | 75 16 | 1856.66 | + 2.68 | +2.45 | + 5.13 | C. A. Schott. | C. and G. S. Rep., 1881, App. 9. |
| Cape Henlopen (S. V. S.). | 38 47 | 75 05 | 1885.58 | + 4.99 | ------ | + 5.56 | J. B. Baylor. | MS. in C. and G. S. Office. |
| Pilot Town. | 38 47 | 75 10 | 1846.50 | + 2.71 | +3.14 | + 5.85 | J. Locke. | C. and G. S. Rep., 1881, App. 9. |
| Lewes Landing. | 38 49 | 75 12 | 1846.50 | + 2.75 | +3.14 | + 5.89 | J. Locke. | C. and G. S. Rep., 1881, App. 9. |
| Bombay Hook. | 39 22 | 75 31 | 1846.46 | + 3.31 | +3.14 | + 6.45 | J. Locke. | C. and G. S. Rep., 1881, App. 9. |
| Fort Delaware. | 39 35 | 75 34 | 1846.45 | + 3.28 | +3.14 | + 6.42 | J. Locke. | C. and G. S. Rep., 1881, App. 9. |
| Sawyer. | 39 42 | 75 34 | 1846.42 | + 2.80 | +3.14 | + 5.94 | J. Locke. | C. and G. S. Rep., 1881, App. 9. |
| Wilmington. | 39 47 | 75 32 | 1875.55 | + 3.74 | +1.12 | + 4.86 | J. M. Poole. | C. and G. S. Rep., 1881, App. 9. |

Group 2.

| | | | | | | | | |
|---|---|---|---|---|---|---|---|---|
| Delaware City. | 39 35 | 75 36* | 1842.50 | + 3.50 | +3.38 | + 6.88 | —— Barnett. | Phil. Trans. Roy. Soc., 1875. |

* Corrected.

FLORIDA. Group 1.

| | | | | | | | | |
|---|---|---|---|---|---|---|---|---|
| Sand Key. | 24 27 | 81 53 | 1849.64 | − 5.48 | +2.53 | − 2.95 | J. E. Hilgard. | C. and G. S. Rep., 1881, App. 9. |
| Key West (S. V. S.). | 24 33 | 81 48 | 1887.09 | − 3.33 | ------ | − 2.96 | J. B. Baylor. | MS. in C. and G. S. Office. |

*Table of Observed Magnetic Declinations and Values reduced to the Year* 1890—Continued.

FLORIDA—Continued.

| Name of station. | φ | λ | t | D | ΔD | $D_{1890.0}$ | Observer. | Reference. |
|---|---|---|---|---|---|---|---|---|
| | ° ′ | ° ′ | | ° | ° | ° | | |
| Bird Key, Dry Tortugas. | 24 37 | 82 54 | 1880.04 | — 3.71 | +0.58 | — 3.13 | S. M. Ackley. | C. and G. S. Rep., 1881, App. 9. |
| Cape Sable, base line. | 25 08 | 81 02 | 1855.4 | — 5.38 | +2.19 | — 3.19 | A. D. Bache. | C. and G. S. Rep., 1881, App. 9. |
| Cape Florida, Key Biscayne. | 25 40 | 80 10 | 1850.15 | — 4.42 | +2.50 | — 1.92 | J. E. Hilgard. | C. and G. S. Rep., 1881, App. 9. |
| Hills, Hillsboro River | 26 16 | 80 05 | 1884.06 | — 2.72 | +0.36 | — 2.36 | B. A. Colonna. | MS. in C. and G. S. Office. |
| Punta Rasa. | 26 29 | 82 01 | 1866.49 | — 4.02 | +1.47 | — 2.55 | A. T. Mosman. | C. and G. S. Rep., 1881, App. 9. |
| Spencer, Lake Worth. | 26 44 | 80 02 | 1884.21 | — 2.86 | +0.35 | — 2.51 | B. A. Colonna. | MS. in C. and G. S. Office. |
| Fort Jupiter. | 26 54 | 80 05 | 1880.18 | — 2.84 | +0.60 | — 2.24 | J. B. Baylor. | C. and G. S. Rep., 1881, App. 9. |
| Indian River, House of Refuge No. 2. | 27 12 | 80 10 | 1883.04 | — 2.60 | +0.42 | — 2.18 | B. A. Colonna. | MS. in C. and G. S. Office. |
| Bell, Indian River. | 27 28 | 80 20 | 1883.34 | — 2.20 | +0.40 | — 1.80 | B. A. Colonna. | MS. in C. and G. S. Office. |
| Saint Lucie, Fort Capron. | 27 29 | 80 15 | 1880.17 | — 2.42 | +0.60 | — 1.82 | J. B. Baylor. | C. and G. S. Rep., 1881, App. 9. |
| Tampa. | 27 57 | 82 27 | 1887.08 | — 3.03 | +0.17 | — 2.86 | J. B. Baylor. | MS. in C. and G. S. Office. |
| Turkey Creek. | 28 04 | 80 35 | 1878.38 | — 3.15 | +0.71 | — 2.44 | R. M. Bache. | C. and G. S. Rep., 1881, App. 9. |
| Eau Gallie. | 28 09 | 80 37 | 1880.15 | — 2.00 | +0.60 | — 1.40 | J. B. Baylor. | C. and G. S. Rep., 1881, App. 9. |
| Enterprise. | 28 53 | 81 14 | 1880.13 | — 2.77 | +0.60 | — 2.17 | J. B. Baylor. | C. and G. S. Rep., 1881, App. 9. |
| Depot Key, Cedar Keys. | 29 08 | 83 02 | 1852.20 | — 5.34 | +2.11 | — 3.23 | J. E. Hilgard. | C. and G. S. Rep., 1881, App. 9. |
| Cedar Keys, Transit of Venus Station. | 29 08 | 83 03 | 1887.12 | — 3.37 | +0.17 | — 3.20 | J. B. Baylor. | MS. in C. and G. S. Office. |
| St. George's Island. | 29 37 | 85 06 | 1853.26 | — 6.04 | +1.94 | — 4.10 | J. G. Oltmanns (F. H. Gerdes). | C. and G. S. Rep., 1881, App. 9. |
| Gainesville. | 29 38 | 82 19 | 1887.13 | — 3.00 | +0.17 | — 2.83 | J. B. Baylor. | MS. in C. and G. S. Office. |
| Cape San Blas. | 29 40 | 85 22 | 1854.08 | — 6.11 | +1.90 | — 4.21 | J. G. Oltmanns (F. H. Gerdes). | C. and G. S. Rep., 1881, App. 9. |
| Apalachicola. | 29 43 | 84 59 | 1860.09 | — 6.20 | +1.66 | — 4.54 | G. W. Dean. | C. and G. S. Rep., 1881, App. 9. |
| Dog Island Light. | 29 47 | 84 40 | 1853.25 | — 5.85 | +1.94 | — 3.91 | J. G. Oltmanns (F. H. Gerdes). | C. and G. S. Rep., 1881, App. 9. |
| Saint Augustine. | 29 54 | 81 19 | 1880.11 | — 2.42 | +0.60 | — 1.82 | J. B. Baylor. | C. and G. S. Rep., 1881, App. 9. |

*Table of Observed Magnetic Declinations and Values reduced to the Year* 1890—Continued.

FLORIDA—Continued.

| Name of station. | $\varphi$ | $\lambda$ | $t$ | D | $\Delta$D | $D_{1890.0}$ | Observer. | Reference. |
|---|---|---|---|---|---|---|---|---|
| | ° ′ | ° ′ | | ° | ° | ° | | |
| Saint Marks, Light. | 30 04 | 84 11 | 1852.25 | — 5.49 | +1.98 | — 3.51 | J. E. Hilgard. | C. and G. S. Rep., 1881, App. 9. |
| Hurricane Island. | 30 04 | 85 39 | 1854.10 | — 6.20 | +1.90 | — 4.30 | J. G. Oltmanns (F. H. Gerdes). | C. and G. S. Rep., 1881, App. 9. |
| Baldwin, Duvall Co. | 30 19 | 81 56 | 1887.06 | — 2.58 | +0.17 | — 2.41 | J. B. Baylor. | MS. in C. and G. S. Office. |
| Jacksonville. | 30 20 | 81 39 | 1880.09 | — 2.34 | +0.60 | — 1.74 | J. B. Baylor. | C. and G. S. Rep., 1881, App. 9. |
| Pensacola. | 30 25 | 87 12 | 1861.02 | — 6.70 | +1.49 | — 5.21 | G. W. Dean. | C. and G. S. Rep., 1881, App. 9. |
| Fernandina. | 30 40 | 81 27 | 1879.10 | — 2.50 | +0.66 | — 1.84 | S. M. Ackley. | C. and G. S. Rep., 1881, App. 9. |

Group 2.

| | | | | | | | | |
|---|---|---|---|---|---|---|---|---|
| Off west end Florida Reef. | 24 15 | 82 40 | 1818.5 | — 6.55 | +3.80 | — 2.75 | —— Livingston. | Becquerel's Tr. du Mag., 1846. |
| Egmont Key, Tampa Bay. | 27 36 | 82 46* | 1843.5 | — 5.42 | +2.54 | — 2.88 | L. M. Powell. | U. S. N. Report, 1843. |
| Titusville. | 28 36 | 80 48 | 1879.68 | — 2.08 | +0.63 | — 1.45 | J. F. Le Baron. | MS. in C. and G. S. Office. |
| Daytona. | 29 08 | 80 58 | 1876.20 | — 3.24 | +0.84 | — 2.40 | D. D. Rogers. | MS. in C. and G. S. Office. |
| Saint Joseph's Bay Light. | 29 52 | 85 23 | 1843.5 | — 6.40 | +2.17 | — 4.23 | L. M. Powell. | U. S. N. Report, 1843. |
| Saint Marks. | 30 08 | 84 11 | 1875.38 | — 4.50 | +0.87 | — 3.63 | J. M. Poole. | Nat. Acad. Sc. |
| Lake City. | 30 11 | 82 37 | 1875.37 | — 3.34 | +0.89 | — 2.45 | J. M. Poole. | Nat. Acad. Sc. |
| Jacksonville. | 30 20 | 81 39 | 1884.5 | — 2.33 | +0.34 | — 1.99 | J. F. Le Baron. | MS. in C. and G. S. Office. |
| Pensacola Navy Yard. | 30 21 | 87 15 | 1843.5 | — 6.90 | +1.82 | — 5.08 | L. M. Powell. | U. S. N. Report, 1843. |
| Tallahassee. | 30 26 | 84 17 | 1875.38 | — 3.70 | +0.87 | — 2.83 | J. M. Poole. | Nat. Acad. Sc. |

*Corrected.

GEORGIA.

Group 1.

| | | | | | | | | |
|---|---|---|---|---|---|---|---|---|
| Du Pont or Lawton. | 30 58 | 82 47 | 1880.08 | — 2.43 | +0.60 | — 1.83 | J. B. Baylor. | C. and G. S. Rep., 1881, App. 9. |
| Brunswick. | 31 09 | 81 30 | 1887.15 | — 1.81 | +0.17 | — 1.64 | J. B. Baylor. | MS. in C. and G. S. Office. |
| Waycross. | 31 11 | 82 30 | 1887.14 | — 2.02 | +0.17 | — 1.85 | J. B. Baylor. | MS. in C. and G. S. Office. |
| Butler, St. Simon's Isd. | 31 18 | 81 21 | 1872.20 | — 2.72 | +1.09 | — 1.63 | A. T. Mosman. | C. and G. S. Rep., 1881, App. 9. |

*Table of Observed Magnetic Declinations and Values reduced to the Year* 1890—Continued.

GEORGIA—Continued.

| Name of station. | φ | λ | t | D | ΔD | $D_{1890.0}$ | Observer. | Reference. |
|---|---|---|---|---|---|---|---|---|
| | ° ′ | ° ′ | | ° | ° | ° | | |
| Jesup. | 31 36 | 81 55 | 1887.17 | — 1.75 | +0.17 | — 1.58 | J. B. Baylor. | MS. in C. and G. S. Office. |
| Skiddaway, north base. | 31 56 | 81 02 | 1856.3 | — 3.42 | +2.02 | — 1.40 | A. W. Longfellow. | C. and G. S. Rep., 1881, App. 9. |
| Tybee Light. | 32 02 | 80 51 | 1870.38 | — 2.34 | +1.21 | — 1.13 | C. O. Boutelle. | C. and G. S. Rep., 1881, App. 9. |
| Savannah, Hutchinson's I. (S. V. S.). | 32 05 | 81 05 | 1886.02 | — 1.62 | ------ | — 1.45 | J. B. Baylor. | MS. in C. and G. S. Office. |
| Macon, Bibb County Academy. | 32 50 | 83 38 | 1855.03 | — 4.61 | +1.81 | — 2.80 | G. W. Dean. | C. and G. S. Rep., 1881, App. 9. |
| Milledgeville (S. V. S.). | 33 04 | 83 10 | 1887.18 | — 3.61 | ------ | — 3.36 | J. B. Baylor. | MS. in C. and G. S. Office. |
| Middle Base, Peach Tree Ridge. | 33 54 | 84 17 | 1873.12 | — 3.58 | +0.97 | — 2.61 | F. P. Webber. | C. and G. S. Rep., 1881, App. 9. |
| Academy, Lawrenceville. | 33 58 | 84 00 | 1874.94 | — 3.41 | +0.89 | — 2.52 | C. O. Boutelle. | C. and G. S. Rep., 1881, App. 9. |
| Kenesaw. | 33 59 | 84 35 | 1873.58 | — 4.72 | +0.95 | — 3.77 | F. P. Webber. | C. and G. S. Rep., 1881, App. 9. |
| Carnes. | 34 00 | 85 01 | 1873.97 | — 4.09 | +0.88 | — 3.21 | F. P. Webber. | C. and G. S. Rep., 1881, App. 9. |
| Sweat. | 34 04 | 84 27 | 1873.77 | — 5.61 | +0.91 | — 4.70 | F. P. Webber. | C. and G. S. Rep., 1881, App. 9. |
| Cumming. | 34 12 | 84 08 | 1873.86 | — 3.22 | +0.91 | — 2.31 | H. W. Blair (C. O. Boutelle). | C. and G. S. Rep., 1881, App. 9. |
| Sawnee. | 34 14 | 84 10 | 1873.83 | — 2.92(?) | +0.91 | —2.01(?) | C. O. Boutelle. | C. and G. S. Rep., 1881, App. 9. |
| Pine Log. | 34 19 | 84 38 | 1874.61 | — 4.00 | +0.85 | — 3.15 | F. P. Webber. | C. and G. S. Rep., 1881, App. 9. |
| Lavender. | 34 19 | 85 17 | 1874.95 | — 3.98 | +0.83 | — 3.15 | F. P. Webber. | C. and G. S. Rep., 1881, App. 9. |
| Grassy. | 34 29 | 84 20 | 1874.56 | — 3.60 | +0.85 | — 2.75 | C. O. Boutelle. | C. and G. S. Rep., 1881, App. 9. |
| Skitt. | 34 30 | 83 43 | 1874.63 | — 2.59 | +0.90 | — 1.69 | C. O. Boutelle. | C. and G. S. Rep., 1881, App. 9. |
| Currahee. | 34 32 | 83 23 | 1874.80 | — 2.80 | +0.90 | — 1.90 | C. O. Boutelle. | C. and G. S. Rep., 1881, App. 9. |
| Johns. | 34 37 | 85 06 | 1875.47 | — 3.95 | +0.80 | — 3.15 | F. P. Webber. | C. and G. S. Rep., 1881, App. 9. |

Group 2.

| | | | | | | | | |
|---|---|---|---|---|---|---|---|---|
| Bainbridge. | 30 55 | 84 46 | 1839.5 | — 5.50 | +2.30 | — 3.20 | (Geol. Sur.). | Sill. Jour., Vol. 39, 1840. |
| Darien. | 31 26 | 81 37 | 1838.5 | — 5.08 | +2.80 | — 2.28 | (Geol. Sur.). | Sill. Jour., Vol. 39. 1840. |

*Table of Observed Magnetic Declinations and Values reduced to the Year* 1890—Continued.

GEORGIA—Continued.

| Name of station. | φ | λ | t | D | ΔD | $D_{1890.0}$ | Observer. | Reference. |
|---|---|---|---|---|---|---|---|---|
| | ° ′ | ° ′ | | ° | ° | ° | | |
| Fort Gaines. | 31 38 | 85 09* | 1839.5 | — 5.52 | +2.01 | — 3.51 | (Geol. Sur.). | Sill. Jour., Vol. 39, 1840. |
| Liberty, court-house. | 31 48 | 81 37 | 1838.5 | — 5.08 | +2.80 | — 2.28 | (Geol. Sur.). | Sill. Jour., Vol. 39, 1840. |
| Cuthbert. | 31 49 | 85 02 | 1839.5 | — 5.50 | +2.01 | — 3.49 | (Geol. Sur.). | Sill. Jour., Vol. 39, 1840. |
| Lumber City. | 31 57 | 82 45 | 1875.46 | — 3.18 | +0.86 | — 2.32 | J. M. Poole. | Nat. Acad. Sc. |
| Bryan, court-house. | 32 02 | 81 32 | 1838.5 | — 5.08 | +2.80 | — 2.28 | (Geol. Sur.). | Sill. Jour., Vol. 39, 1840. |
| Lumpkin. | 32 09 | 84 55 | 1839.5 | — 5.45 | +2.01 | — 3.44 | (Geol. Sur.). | Sill. Jour., Vol. 39, 1840. |
| Springfield. | 32 21 | 81 30 | 1837.5 | — 5.08 | +2.83 | — 2.25 | (Geol. Sur.). | Sill. Jour., Vol. 39, 1840. |
| Columbus. | 32 28 | 85 01* | 1839.5 | — 5.50 | +2.07 | — 3.43 | (Geol. Sur.). | Sill. Jour., Vol. 39, 1840. |
| Black Creek, Scriven Co. | 32 39 | 81 20 | 1837.5 | — 5.07 | +2.83 | — 2.24 | (Geol. Sur.). | Sill. Jour., Vol. 39, 1840. |
| Swainsborough. | 32 39 | 82 30 | 1838.5 | — 5.07 | +2.46 | — 2.61 | (Geol. Sur.). | Sill. Jour., Vol. 39, 1840. |
| Birdsville. | 32 48 | 82 13 | 1837.5 | — 5.02 | +2.49 | — 2.53 | (Geol. Sur.). | Sill. Jour., Vol. 39, 1840. |
| Jacksonborough. | 32 49 | 81 43 | 1837.5 | — 4.92 | +2.77 | — 2.15 | (Geol. Sur.). | Sill. Jour., Vol. 39, 1840. |
| Millen. | 32 50 | 81 50 | 1875.47 | — 2.62 | +0.86 | — 1.76 | J. M. Poole. | Nat. Acad. Sc. |
| Macon. | 32 50 | 83 37 | 1888.2 | — 2.50 | +0.11 | — 2.39 | J. C. Wheeler. | MS. in C. and G. S. Office. |
| Mill Haven. | 32 56 | 81 47 | 1837.5 | — 5.07 | +2.77 | — 2.30 | (Geol. Sur.). | Sill. Jour., Vol. 39, 1840. |
| Sandersville. | 32 57 | 82 59 | 1838.5 | — 5.45 | +2.20 | — 3.25 | (Geol. Sur.). | Sill. Jour., Vol. 39, 1840. |
| Waynesborough | 33 03 | 82 09 | 1837.5 | — 5.07 | +2.21 | — 2.86 | (Geol. Sur.). | Sill. Jour., Vol. 39, 1840. |
| Eatonton. | 33 21 | 83 34 | 1838.5 | — 4.53 | +2.20 | — 2.33 | (Geol. Sur.). | Sill. Jour., Vol. 39, 1840. |
| Augusta. | 33 26 | 82 01 | 1837.5 | — 5.07 | +2.56 | — 2.51 | (Geol. Sur.). | Sill. Jour., Vol. 39, 1840. |
| Applington. | 33 32 | 82 27 | 1837.5 | — 5.00 | +2.56 | — 2.44 | (Geol. Sur.). | Sill. Jour., Vol. 39, 1840. |
| Madison. | 33 34 | 83 40 | 1838.5 | — 4.48 | +2.20 | — 2.28 | (Geol. Sur.). | Sill. Jour., Vol. 39, 1840. |
| Lincolnton. | 33 46 | 82 38 | 1837.5 | — 5.15 | +2.56 | — 2.59 | (Geol. Sur.). | Sill. Jour., Vol. 39, 1840. |
| Monroe. | 33 51 | 83 53 | 1838.5 | — 5.17 | +2.20 | — 2.97 | (Geol. Sur.). | Sill. Jour., Vol. 39, 1840. |

*Corrected.

*Table of Observed Magnetic Declinations and Values reduced to the Year* 1890—Continued.

GEORGIA—Continued.

| Name of station. | φ | λ | t | D | ΔD | $D_{1890.0}$ | Observer. | Reference. |
|---|---|---|---|---|---|---|---|---|
| | ° ′ | ° ′ | | ° | ° | ° | | |
| Goshen. | 33 52 | 82 40 | 1837.5 | — 5.15 | +2.21 | — 2.94 | (Geol. Sur.). | Sill. Jour., Vol. 39, 1840. |
| Athens. | 33 57 | 83 23 | 1837.5 | — 4.52 | +2.21 | — 2.31 | —— McCay. | Sill. Jour., Vol. 34, 1838. |
| Lawrenceville. | 33 58 | 84 10 | 1839.5 | — 5.00 | +2.19 | — 2.81 | (Geol. Sur.). | Sill. Jour., Vol. 39, 1840. |
| Elberton. | 34 06 | 82 59 | 1837.5 | — 4.55 | +2.21 | — 2.34 | (Geol. Sur.). | Sill. Jour., Vol. 39, 1840. |
| Carnesville. | 34 25 | 83 25 | 1837.5 | — 5.02 | +2.21 | — 2.81 | (Geol. Sur.). | Sill. Jour., Vol. 39, 1840. |
| Toccoa Falls, Habersham Co. | 34 36 | 83 20 | 1837.5 | — 5.00 | +2.21 | — 2.79 | (Geol. Sur.). | Sill. Jour., Vol. 39, 1840. |

IDAHO TERRITORY.

Group 1.

| | | | | | | | | |
|---|---|---|---|---|---|---|---|---|
| Lewiston. | 46 28 | 117 05 | 1881.71 | —21.44 | +0.09 | —21.35 | J. S. Lawson. | C. and G. S. Rep., 1881, App. 9. |
| Lake Pend d'Oreille, Steamboat Landing. | 47 58 | 116 30 | 1881.70 | —22.09 | +0.09 | —22.00 | J. S. Lawson. | C. and G. S. Rep., 1881, App. 9. |
| Siniaquoteen. | 48 10 | 116 45 | 1881.67 | —22.48 | +0.09 | —22.39 | J. S. Lawson. | C. and G. S. Rep., 1881, App. 9. |

Group 2,

| | | | | | | | | |
|---|---|---|---|---|---|---|---|---|
| U. S. Land Survey Stations, mean position. | 42 00 | 116 22 | 1867.5 | —18.75 | +0.34 | —18.41 | L. F. Cartee. | MS. in C. and G. S. Office. |
| Saint Charles Cañon. | 42 05 | 111 32 | 1877.5 | —18.13 | +0.35 | —17.78 | S. E. Tillman. | Rep. Ch. of Eng's, 1878. |
| Robbin's Ford. | 42 10 | 111 49 | 1877.5 | —17.80 | +0.35 | —17.45 | S. E. Tillman. | Rep. Ch. of Eng's, 1878. |
| Malade City. | 42 11 | 112 16 | 1877.5 | —17.73 | +0.35 | —17.38 | R. Birnie. | Rep. Ch. of Eng's, 1878. |
| Bear River. | 42 13 | 111 08 | 1877.5 | —17.99 | +0.35 | —17.64 | S. E. Tillman. | Rep. Ch. of Eng's, 1878. |
| Mink Creek. | 42 13 | 111 44 | 1877.5 | —17.85 | +0.35 | —17.50 | S. E. Tillman. | Rep. Ch. of Eng's, 1878. |
| Camp 80. south of Oxford Settlement. | 42 14 | 112 01 | 1877.5 | —18.35 | +0.35 | —18.00 | W. Young. | Rep. Ch. of Eng's, 1878. |
| Camp 77, NW. of Oxford Peak. | 42 16 | 112 05 | 1877.5 | —17.83 | +0.35 | —17.48 | W. Young. | Rep. Ch. of Eng's, 1878. |
| Camp 78, NE. of Elkhorn Peak. | 42 23 | 112 13 | 1877.5 | —17.85 | +0.35 | —17.50 | W. Young. | Rep. Ch. of Eng's, 1878. |

*Table of Observed Magnetic Declinations and Values reduced to the Year* 1890—Continued.

IDAHO TERRITORY—Continued.

| Name of station. | $\varphi$ | $\lambda$ | $t$ | D | $\Delta$D | $D_{1890.0}$ | Observer. | Reference. |
|---|---|---|---|---|---|---|---|---|
| | ° ′ | ° ′ | | ° | ° | ° | | |
| Camp 53, SE. of Mt. Sedgewick. | 42 28 | 111 47 | 1877.5 | —18.30 | +0.35 | —17.95 | S. E. Tillman. | Rep. Ch. of Eng's, 1878. |
| Hawkins Creek. | 42 32 | 112 20 | 1877.5 | —22.78 | +0.35 | —22.43 | W. Young. | Rep. Ch. of Eng's, 1878. |
| Raft Creek. | 42 36 | 113 08 | 1859.59 | —16.75 | 0.00 | —16.75 | J. Dixon. | Sen. Pub. Doc., Vol. 9, 1859–'60. |
| Camp 71. | 42 38 | 112 23 | 1877.5 | —18.62 | +0.35 | —18.27 | W. Young. | Rep. Ch. of Eng's, 1878. |
| Soda Springs Village. | 42 40 | 111 35 | 1877.5 | —21.17 | +0.35 | —20.82 | S. E. Tillman. | Rep. Ch. of Eng's, 1878. |
| Salmon River Falls. | 42 42 | 114 39 | 1859.58 | —17.18 | 0.00 | —17.18 | J. Dixon. | Sen. Pub. Doc., Vol. 9, 1859–'60. |
| Shadow Lake. | 42 43 | 113 05 | 1877.5 | —16.07 | +0.35 | —15.72 | R. Birnie. | Rep. Ch. of Eng's, 1878. |
| Game Creek. | 42 46 | 111 15 | 1877.5 | —18.32 | +0.35 | —17.97 | S. E. Tillman. | Rep. Ch. of Eng's, 1878. |
| Little Cañon of Smoky Creek. | 42 47 | 111 01 | 1858.68 | —19.20 | +0.14 | —19.06 | W. H. Wagner. | MS. in C. and G. S. Office. |
| Magnetic Station. | 42 47 | 111 57 | 1889.36 | —18.05 | +0.02 | —18.03 | N. P. Anderson. | MS. in C. and G. S. Office. |
| Port Neuf River. | 42 47 | 112 16 | 1877.5 | —18.73 | +0.35 | —18.38 | S. E. Tillman. | Rep. Ch. of Eng's, 1878. |
| Lane's Fork. | 42 55 | 111 18 | 1877.5 | —18.43 | +0.35 | —18.08 | S. E. Tillman. | Rep. Ch. of Eng's, 1878. |
| Rattlesnake Meadows. | 42 56 | 115 06 | 1859.58 | —17.00 | 0.00 | —17.00 | J. Dixon. | Sen. Pub. Doc., Vol. 9, 1859–'60. |
| Little Blackfoot River. | 42 57 | 112 00(?) | 1877.5 | —18.87 | +0.35 | —18.52 | S. E. Tillman. | Rep. Ch. of Eng's, 1878. |
| Tincup Run. | 42 59 | 111 16 | 1877.5 | —18.53 | +0.35 | —18.18 | S. E. Tillman. | Rep. Ch. of Eng's, 1878. |
| Jack Knife Creek. | 43 02 | 111 07 | 1877.5 | —18.45 | +0.35 | —18.10 | S. E. Tillman. | Rep. Ch. of Eng's, 1878. |
| Camp 41, NE. of Mt. Pisgah. | 43 07 | 111 15 | 1877.5 | —18.33 | +0.35 | —17.98 | S. E. Tillman. | Rep. Ch. of Eng's, 1878. |
| Fort Hall. | 43 09 | 112 12 | 1877.5 | —18.22 | +0.35 | —17.87 | R. Birnie. | Rep. Ch. of Eng's, 1878. |
| Camp 43. | 43 10 | 111 48 | 1877.5 | —18.72 | +0.35 | —18.37 | S. E. Tillman. | Rep. Ch. of Eng's, 1878. |
| Highane's Ranch. | 43 14 | 112.26 | 1872.77 | —17.83 | +0.21 | —17.62 | F. V. Hayden. | Geol. Sur. of Ter., 1873. |
| U. S. Land Survey Stations, mean position. | 43 22 | 114.17 | 1867.5 | —18.75 | +0.15 | —18.60 | L. F. Cartee. | MS. in C. and G. S. Office. |
| U. S. Land Survey Stations, mean position. | 43 22 | 116 30 | 1867.5 | —18.45 | +0.15 | —18.30 | L. F. Cartee. | MS. in C. and G. S. Office. |

*Table of Observed Magnetic Declinations and Values reduced to the Year* 1890—Continued.

IDAHO—Continued.

| Name of station. | φ | λ | t | D | ⊿D | $D_{1890.0}$ | Observer. | Reference. |
|---|---|---|---|---|---|---|---|---|
| | ° ′ | ° ′ | | ° | ° | ° | | |
| Hot Springs. | 43 23 | 116 18 | 1859.56 | —17.83 | —0.04 | —17.87 | J. Dixon. | Sen. Pub. Doc., Vol. 9, 1859–'60. |
| U. S. Land Survey Stations, mean position. | 43 25 | 116 22 | 1867.5 | —18.25 | +0.15 | —18.10 | L. F. Cartee. | MS. in C. and G. S. Office. |
| Willow Creek. | 43 34 | 11 421 | 1872.77 | —17.92 | +0.37 | —17.55 | F. V. Hayden. | Geol. Sur. of Ter., 1873. |
| Camp 52. | 43 35(?) | 111 30(?) | 1872.77 | —18.00 | +0.37 | —17.63 | F. V. Hayden. | Geol. Sur. of Ter., 1873. |
| Snake River, 8 miles below Cañon. | 43 40 | 111 20 | 1872.76 | —17.98 | +0.37 | —17.61 | F. V. Hayden. | Geol. Sur. of Ter., 1873. |
| Camp 16, mouth of Fall River. | 44 01 | 111 30 | 1872.55 | —18.20 | +0.37 | —17.83 | F. V. Hayden. | Geol. Sur. of Ter., 1873. |
| U. S. Land Survey Stations, mean position. | 44 10 | 116 22 | 1867.5 | —19.12 | +0.15 | —18.97 | L. F. Cartee. | MS. in C. and G. S. Office. |
| Henry's Fork. | 44 19 | 111 20 | 1872.59 | —18.42 | +0.37 | —18.05 | F. V. Hayden. | Geol. Sur. of Ter., 1873. |
| Camp 26. | 44 30(?) | 111 20(?) | 1872.60 | —19.22 | +0.37 | —18.85 | F. V. Hayden. | Geol. Sur. of Ter., 1873. |
| Camp 27, Henry Lake Valley. | 44 38 | 111 17 | 1872.60 | —18.73 | +0.37 | —18.36 | F. V. Hayden. | Geol. Sur. of Ter., 1873. |
| U. S. Land Survey Stations, mean position. | 44 45 | 116 22 | 1867.5 | —19.17 | +0.05 | —19.12 | L. F. Cartee. | MS. in C. and G. S. Office. |
| U. S. Land Survey Stations, mean position. | 45 14 | 116 22 | 1867.5 | —21.17 | +0.05 | —21.12 | L. F. Cartee. | MS. in C. and G. S. Office. |
| U. S. Land Survey Stations, mean position. | 45 44 | 116 22 | 1867.5 | —20.94 | 0.00 | —20.94 | L. F. Cartee. | MS. in C. and G. S. Office. |
| U. S. Land Survey Stations, mean position. | 45 50 | 114 40 | 1867.5 | —19.75 | +0.10 | —19.65 | L. F. Cartee. | MS. in C. and G. S. Office. |
| U. S. Land Survey Stations, mean position. | 46 17 | 116 22 | 1867.5 | —20.32 | 0.00 | —20.32 | L. F. Cartee. | MS. in C. and G. S. Office. |
| Fort Lapway. | 46 18 | 116 54 | 1876.4 | —19.75 | +0.08 | —19.67 | W. M. Miller. | Rep. Ch. of Eng's, 1876. |
| Sohon Pass. | 47 27 | 115 43 | 1860.5 | —20.62 | 0.00 | —20.62 | J. Mullan. | Stone's Mag. Var's, 1878. |
| Cœur d'Alene Mission. | 47 33 | 116 21 | 1860.5 | —20.90 | 0.00 | —20.90 | J. Mullan. | Stone's Mag. Var's, 1878. |
| Pack River. | 48 22 | 116 28 | 1861.5 | —22.85 | 0.00 | —22.85 | R. W. Haig. | Phil. Trans. Roy. Soc., 1864. |
| Chelemta River. | 48 41 | 116.19 | 1861.5 | —22.18 | 0.00 | —22.18 | R. W. Haig. | Phil. Trans. Roy. Soc., 1864. |
| Boundary Station. | 49 00 | 116 33 | 1860. | —22.62 | 0.00 | —22.62 | J. S. Harris. | NW. Boundary chart. |

*Table of Observed Magnetic Declinations and Values reduced to the Year* 1890—Continued.

ILLINOIS.

Group 1.

| Name of station. | φ | λ | t | D | ΔD | $D_{1890.0}$ | Observer. | Reference. |
|---|---|---|---|---|---|---|---|---|
| | ° ′ | ° ′ | | ° | ° | ° | | |
| Cairo. | 37 01 | 89 10 | 1877.91 | — 6.01 | +0.88 | — 5.13 | A. Braid. | C. and G. S. Rep., 1881, App. 9. |
| Mound City. | 37 05 | 89 04 | 1865.01 | — 7.53 | +1.61 | — 5.92 | A. T. Mosman. | C. and G. S. Rep., 1881, App. 9. |
| Springfield. | 39 50 | 89 39 | 1878.93 | — 5.81 | +0.81 | — 5.00 | J. B. Baylor. | C. and G. S. Rep., 1881, App. 9. |
| Chicago, near old University (S.V.S.). | 41 50 | 87 37 | 1888.63 | — 4.12 | ------ | — 3.96 | J. B. Baylor. | MS. in C. and G. S. Office. |

Group 2.

| | | | | | | | | |
|---|---|---|---|---|---|---|---|---|
| Golconda. | 37 23 | 88 25 | 1872.46 | — 6.10 | +1.24 | — 4.86 | T. C. Hilgard. | Nat. Acad. Sc. |
| Kaskaskia. | 37 57 | 89 55 | 1809.5 | — 7.33 | +3.13 | — 4.20 | (Public Sur.). | Sill. Jour., Vol. 34, 1838. |
| New Athens. | 38 11 | 89 55 | 1880.77 | — 5.82 | +0.67 | — 5.15 | F. E. Nipher. | Trans. St. Louis Acad. Sc. |
| Cahokia. | 38 36 | 90 09 | 1810.5 | — 8.42 | +3.14 | — 5.28 | J. Mansfield. | Sill. Jour., Vol. 34, 1838. |
| Collinsville. | 38 39 | 90 04 | 1880.38 | — 6.51 | +0.70 | — 5.81 | F. E. Nipher. | Trans. St. Louis Acad. Sc. |
| Highland. | 38 45 | 89 41 | 1872.67 | — 6.57 | +1.25 | — 5.32 | T. C. Hilgard. | Nat. Acad. Sc. |
| East Base. | 38 52 | 88 02 | 1879.82 | — 5.00 | +0.74 | — 4.26 | J. H. Darling. | P. P., U. S. Eng's, No. 24, 1882. |
| Alton. | 38 52 | 90 12 | 1840.5 | — 7.75 | +2.96 | — 4.79 | H. Loomis. | Sill. Jour., Vol. 39, 1840. |
| Belle Air. | 39 11 | 87 52 | 1879.78 | — 5.13 | +0.74 | — 4.39 | J. H. Darling. | P. P., U. S. Eng's, No. 24, 1882. |
| Public Land Survey Station. | 39 30 | 88 32 | 1821.5 | — 8.00 | +3.25 | — 4.75 | (Public Sur.). | Sill. Jour., Vol. 39, 1840. |
| Macon. | 39 42 | 89 10 | 1872.66 | — 5.36 | +1.25 | — 4.11 | T. C. Hilgard. | Nat. Acad. Sc. |
| Jacksonville. | 39 45 | 90 18 | 1833.5 | — 8.75 | +3.13 | — 5.62 | —— Sturtevant. | Sill. Jour., Vol. 34, 1838. |
| Palermo. | 39 53 | 87 52 | 1879.72 | — 5.20 | +0.74 | — 4.46 | J. H. Darling. | P. P., U. S. Eng's, No. 24, 1882. |
| Public Land Survey Station. | 40 00 | 88 32 | 1822.5 | — 7.92 | +2.86 | — 5.06 | (Public Sur.). | Sill. Jour., Vol. 39, 1840. |
| Beardstown. | 40 00 | 90 29 | 1880.60 | — 6.72 | +0.68 | — 6.04 | F. E. Nipher. | St. Louis. Acad. Sc. |
| Pilot Grove. | 40 12 | 87 50 | 1879.68 | — 4.48 | +0.62 | — 3.86 | J. H. Darling. | P. P., U. S. Eng's, No. 24, 1882. |
| Public Land Survey Station. | 40 20 | 88 32 | 1823.5 | — 7.67 | +2.86 | — 4.81 | (Public Sur.). | Sill. Jour., Vol. 39, 1840. |
| Public Land Survey Station. | 40 30 | 88 32 | 1823.5 | — 7.50 | +2.86 | — 4.64 | (Public Sur.). | Sill. Jour., Vol. 39, 1840. |

*Table of Observed Magnetic Declinations and Values reduced to the Year* 1890—Continued.

ILLINOIS—Continued.

| Name of station. | φ | λ | t | D | ΔD | $D_{1890.0}$ | Observer. | Reference. |
|---|---|---|---|---|---|---|---|---|
| | ° ′ | ° ′ | | ° | ° | ° | | |
| Public Land Survey Station. | 40 50 | 88 32 | 1833.5 | — 7.72 | +2.67 | — 5.05 | (Public Sur.). | Sill. Jour., Vol. 39, 1840. |
| Public Land Survey Station. | 41 00 | 88 32 | 1838.5 | — 6.83 | +2.38 | — 4.45 | (Public Sur.). | Sill. Jour., Vol. 39, 1840. |
| Wenona. | 41 05 | 89 26 | 1872.66 | — 6.10 | +1.04 | — 5.06 | T. C. Hilgard. | Nat. Acad. Sc. |
| Public Land Survey Station. | 41 10 | 88 32 | 1838.5 | — 7.42 | +2.38 | — 5.04 | (Public Sur.). | Sill. Jour., Vol. 39, 1840. |
| Public Land Survey Station. | 41 15 | 88 32 | 1821.5 | — 8.25 | +2.86 | — 5.39 | (Public Sur.). | Sill. Jour., Vol. 39, 1840. |
| Rock Island. | 41 31 | 90 34 | 1878.41 | — 6.96 | +0.72 | — 6.24 | C. F. Powell. | Lake Sur. Rep., 1879. |
| Willow Springs. | 41 44 | 87 51 | 1879.55 | — 5.17 | +0.64 | — 4.53 | J. H. Darling. | P. P., U. S. Eng's, No. 24, 1882. |
| Mount Forest. | 41 45 | 87 52 | 1876.66 | — 4.59 | +0.82 | — 3.77 | D. W. Lockwood. | Rep. Ch. of Eng's, 1877. |
| Fulton. | 41 52 | 90 12 | 1844.08 | — 8.25 | +2.14 | — 6.11 | (U. S. Land Sur.). | MS. by O. Sprague. |
| Winetka. | 42 06 | 87 44 | 1873.5 | — 4.97 | +1.00 | — 3.97 | H. Custer. | P. P., U. S. Eng's, No. 24, 1882. |
| Rockford. | 42 17 | 89 07 | 1876.77 | — 5.30 | +0.99 | — 4.31 | C. F. Powell. | Rep. Ch. of Eng's, 1877. |
| Waukegan. | 42 21 | 87 50 | 1873.5 | — 5.18 | +1.20 | — 3.98 | H. Custer. | P. P., U. S. Eng's, No. 24, 1882. |
| Galena. | 42 25 | 90 26 | 1876.74 | — 9.14 | +0.99 | — 8.15 | C. F. Powell. | Rep. Ch. of Eng's, 1877. |
| Sherwood. | 42 27 | 90 37 | 1839.78 | — 9.00 | +2.60 | — 6.40 | ---------- | Locke's Rep. Min. Lands, 1839–'40. |
| Dunleith. | 42 28 | 90 40 | 1856.80 | — 8.58 | +2.15 | — 6.43 | K. Friesah. | K. K. Acad. Sc., Vienna, 1858. |

INDIANA. Group I.

| | | | | | | | | |
|---|---|---|---|---|---|---|---|---|
| New Harmony. | 38 08 | 87 50 | 1880.84 | — 5.08 | +0.63 | — 4.43 | J. B. Baylor. | C. and G. S. Rep., 1881, App. 9. |
| Vincennes. | 38 42 | 87 32 | 1880.83 | — 4.38 | +0.63 | — 3.75 | J. B. Baylor. | C. and G. S. Rep., 1881, App. 9. |
| Terre Haute. | 39 28 | 87 20 | 1888.62 | — 3.74 | +0.09 | — 3.65 | J. B. Baylor. | MS. in C. and G. S. Office. |
| Indianapolis. | 39 47 | 86 08 | 1880.86 | — 2.78 | +0.63 | — 2.15 | J. B. Baylor. | C. and G. S. Rep., 1881, App. 9. |
| Richmond. | 39 50 | 84 50 | 1880.88 | — 2.88 | +0.54 | — 2.34 | J. B. Baylor. | C. and G. S. Rep., 1881, App. 9. |

*Table of Observed Magnetic Declinations and Values reduced to the Year* 1890—Continued.

INDIANA—Continued. Group 2.

| Name of station. | φ | λ | t | D | ΔD | $D_{1890.0}$ | Observer. | Reference. |
|---|---|---|---|---|---|---|---|---|
| | ° ′ | ° ′ | | ° | ° | ° | | |
| Mouth of Wabash. | 38 00 | 88 00 | 1810.5 | — 7.17 | +3.14 | — 4.03 | J. Mansfield. | Sill. Jour., Vol. 34, 1838. |
| Ohio River. | 38 10 | 86 30 | 1810.5 | — 6.50 | +3.17 | — 3.33 | J. Mansfield. | Sill. Jour., Vol. 34, 1838. |
| Falls of the Ohio. | 38 20 | 85 40 | 1810.5 | — 5.83 | +3.20 | — 2.63 | J. Mansfield. | Sill. Jour., Vol. 34, 1838. |
| Madison. | 38 45 | 85 15 | 1810.5 | — 5.42 | +3.20 | — 2.22 | J. Mansfield. | Sill. Jour., Vol. 34, 1838. |
| South Hanover. | 38 45 | 85 23 | 1837.5 | — 4.58 | +2.64 | — 1.94 | —— Dunn. | Sill. Jour., Vol. 34, 1838. |
| Logansport. | 40 45 | 86 24 | 1836.5 | — 5.58 | +2.55 | — 3.03 | (Map of Town). | Sill. Jour., Vol. 39, 1840. |
| Reynolds. | 40 45 | 86 48 | 1874.65 | — 3.50 | +0.90 | — 2.60 | F. E. Hilgard. | Nat. Acad. Sc. |
| Fort Wayne. | 41 06 | 85 03 | 1874.65 | — 2.48 | +0.90 | — 1.58 | F. E. Hilgard. | Nat. Acad. Sc. |
| Grand Calumet River. | 41 37 | 87 15 | 1871.74 | — 4.50 | +1.07 | — 3.43 | L. Foote. | P. P., U. S. Eng's, No. 24, 1882. |
| Michigan City (S.V.S) | 41 43* | 86 54* | 1873.64 | — 3.98 | ------ | — 2.89 | A. N. Lee. | MS. in C. and G. S. Office. |

*Corrected.

INDIAN TERRITORY. Group 2.

| | | | | | | | | |
|---|---|---|---|---|---|---|---|---|
| Atoka. | 34 24 | 96 05 | 1878.54 | — 9.19 | +0.60 | — 8.59 | J. B. Baylor. | C. and G. S. Rep., 1881, App. 9. |
| Eufaula. | 35 16 | 95 33 | 1878.54 | — 9.17 | +0.60 | — 8.57 | J. B. Baylor. | C. and G. S. Rep., 1881, App. 9. |
| Vinita. | 36 38 | 95 08 | 1888.78 | — 8.80 | +0.07 | — 8.73 | J. B. Baylor. | MS. in C. and G. S. Office. |

Group 2.

| | | | | | | | | |
|---|---|---|---|---|---|---|---|---|
| Wilson Rock. | 35 19 | 94 37 | 1870.3 | — 9.33 | +1.00 | — 8.33 | S. T. Abert. | MS. in C. and G. S. Office. |
| Jack Brown's. | 35 20 | 94 45 | 1870.3 | — 9.43 | +1.00 | — 8.43 | S. T. Abert. | MS. in C. and G. S. Office. |
| Canadian. | 35 25 | 95 00 | 1870.3 | — 9.15 | +1.00 | — 8.15 | S. T. Abert. | MS. in C. and G. S. Office. |
| Weller's Falls. | 35 30 | 95 07 | 1870.3 | — 9.50 | +1.00 | — 8.50 | S. T. Abert. | MS. in C. and G. S. Office. |
| Fort Gibson. | 35 48 | 95 20 | 1870.3 | — 9.80 | +1.00 | — 8.80 | S. T. Abert. | MS. in C. and G. S. Office. |

*Table of Observed Magnetic Declinations and Values reduced to the Year* 1890—Continued.

IOWA.

Group 1.

| Name of station. | φ | λ | t | D | ΔD | $D_{1890.0}$ | Observer. | Reference. |
|---|---|---|---|---|---|---|---|---|
| | ° ′ | ° ′ | | ° | ° | ° | | |
| Keokuk. | 40 26 | 91 25 | 1888.69 | — 6.74 | +0.09 | — 6.65 | J. B. Baylor. | MS. in C. and G. S. Office. |
| Ottumwa. | 41 02 | 92 25 | 1888.70 | — 7.82 | +0.09 | — 7.73 | J. B. Baylor. | MS. in C. and G. S. Office. |
| Davenport. | 41 30 | 90 38 | 1888.68 | — 6.15 | +0.09 | — 6.06 | J. B. Baylor. | MS. in C. and G. S. Office. |
| Des Moines. | 41 36 | 93 36 | 1888.72 | — 8.46 | +0.09 | — 8.37 | J. B. Baylor. | MS. in C. and G. S. Office. |
| Dubuque. | 42 30 | 90 44 | 1880.81 | — 6.76 | +0.69 | — 6.07 | J. B. Baylor. | C. and G. S. Rep., 1881, App. 9. |
| Sibley. | 43 24 | 95 50 | 1877.77 | —10.84 | +0.91 | — 9.93 | A. Braid. | C. and G. S. Rep., 1881, App. 9. |

Group 2.

| | | | | | | | | |
|---|---|---|---|---|---|---|---|---|
| Keokuk. | 40 25 | 91 28 | 1878.58 | — 7.58 | +0.83 | — 6.75 | F. E. Nipher. | Trans. St. Louis Acad. Sc. |
| Near Winchester, Van Buren Co. | 40 50 | 91 56 | 1879.74 | — 8.17 | +0.75 | — 7.42 | J. B. Kaufman. | MS. in C. and G. S. Office. |
| Glenwood, Mills Co. | 41 04 | 95 42 | 1883.79 | —10.38 | +0.46 | — 9.92 | S. Dean. | MS. in C. and G. S. Office. |
| Council Bluffs. | 41 15 | 95 52 | 1878.66 | —10.66 | +0.84 | — 9.82 | T. E. Thorpe. | Proc. Roy. Soc., 1880. |
| Station Mo. River Bottom, near Long's Eng'r Cantonment, 1819. | 41 24 | 95 44 | 1885.77 | —10.25 | +0.31 | — 9.94 | S. Dean. | MS. in C. and G. S. Office. |
| Near Atalissa. | 41 38 | 91 14 | 1882.65 | — 7.34 | +0.54 | — 6.80 | F. E. Nipher. | MS. in C. and G. S. Office. |
| Lost Grove. | 41 39 | 90 09 | 1839.73 | — 8.17 | +2.96 | — 5.21 | ---------- | Locke's Rep. on Min. Lands, 1839–'40. |
| Iowa City. | 41 40 | 91 32 | 1879.50 | — 8.06 | +0.78 | — 7.28 | F. E. Nipher. | Trans. St. Louis Acad. Sc. |
| Near Iowa City. | 41 40 | 91 36 | 1880.46 | — 8.83 | +0.71 | — 8.12 | F. E. Nipher. | Trans. St. Louis Acad. Sc. |
| Aikins, Cedar Co. | 41 43 | 91 14 | 1882.66 | — 7.81 | +0.54 | — 7.27 | F. E. Nipher. | MS. in C. and G. S. Office. |
| Wapsipinecon River. | 41 44 | 90 23 | 1839.73 | — 8.42 | +2.96 | — 5.46 | J. Locke. | Locke's Rep. on Min. Lands, 1839–'40. |
| Iron Ore. | 41 55 | 90 40 | 1839.74 | — 7.71 | +2.96 | — 4.75 | J. Locke and others. | Locke's Rep. on Min. Lands, 1839–'40. |

*Table of Observed Magnetic Declinations and Values reduced to the Year* 1890—**Continued.**

IOWA—Continued.

| Name of station. | φ | λ | t | D | ΔD | $D_{1890.0}$ | Observer. | Reference. |
|---|---|---|---|---|---|---|---|---|
| | ° ′ | ° ′ | | ° | ° | ° | | |
| Elkford. | 42 00 | 90 52 | 1839.74 | — 9.25 | +2.96 | — 6.29 | ---------- | Locke's Rep. on Min. Lands, 1839–'40. |
| Small Mill. | 42 04 | 91 02 | 1839.75 | — 9.07 | +2.96 | — 6.11 | J. Locke. | Locke's Rep. on Min. Lands, 1839–'40. |
| Bridge. | 42 06 | 91 02 | 1839.75 | — 9.33 | +2.96 | — 6.37 | ---------- | Locke's Rep. on Min. Lands, 1839–'40. |
| Mill. | 42 10 | 90 37 | 1839.75 | — 9.25 | +2.96 | — 6.29 | ---------- | Locke's Rep. on Min. Lands, 1839–'40. |
| Cheney's. | 42 12 | 90 21 | 1839.76 | — 9.08 | +2.96 | — 6.12 | ---------- | Locke's Rep. on Min. Lands, 1839–'40. |
| Farmer's Creek. | 42 13 | 90 23 | 1839.76 | — 9.18 | +2.96 | — 6.22 | J. Locke. | Locke's Rep. on Min. Lands, 1839–'40. |
| Makoqueta River. | 42 14 | 90 57 | 1839.75 | — 8.75 | +2.96 | — 5.79 | ---------- | Locke's Rep. on Min. Lands, 1839–'40. |
| White Water. | 42 18 | 90 38 | 1839.77 | — 9.17 | +2.96 | — 6.21 | ---------- | Locke's Rep. on Min. Lands, 1839–'40. |
| North Branch Maksquita. | 42 23 | 90 52 | 1839.77 | — 9.58 | +2.96 | — 6.62 | ---------- | Locke's Rep. on Min. Lands, 1839–'40. |
| Little Makoqueta. | 42 31 | 90 31 | 1839.80 | — 8.50 | +2.96 | — 5.54 | ---------- | Locke's Rep. on Min. Lands, 1839–'40. |
| Sherald's Mound. | 42 35 | 90 33 | 1839.80 | — 8.17 | +2.96 | — 5.21 | ---------- | Locke's Rep. on Min. Lands, 1839–'40. |
| Log House. | 42 38 | 90 43 | 1839.80 | — 9.00 | +2.96 | — 6.04 | ---------- | Locke's Rep. on Min. Lands, 1839–'40. |
| Turkey River. | 42 42 | 90 48 | 1839.81 | — 9.00 | +2.96 | — 6.04 | ---------- | Locke's Rep. on Min. Lands, 1839–'40. |
| Cherokee, Eclipse Station. | 42 46 | 95 38 | 1869.60 | —11.53 | +1.46 | —10.07 | J. Blickensderfer. | C. S. Rep., 1869. |
| Ferry opposite Prairie du Chien. | 43 03 | 90 53 | 1839.82 | — 9.08 | +2.96 | — 6.12 | ---------- | Locke's Rep. on Min. Lands, 1839–'40. |

*Table of Observed Magnetic Declinations and Values reduced to the Year* 1890—Continued.

KANSAS. Group 1.

| Name of station. | φ | λ | t | D | ΔD | $D_{1890.0}$ | Observer. | Reference. |
|---|---|---|---|---|---|---|---|---|
| | ° ′ | ° ′ | | ° | ° | ° | | |
| Wichita, Garfield University. | 37 40 | 97 20 | 1888.79 | —10.16 | +0.07 | —10.09 | J. B. Baylor. | MS. in C. and G. S. Office. |
| Dodge City. | 37 44 | 99 59 | 1888.80 | —11.77 | +0.06 | —11.71 | J. B. Baylor. | MS. in C. and G. S. Office. |
| Humboldt. | 37 49 | 95 26 | 1878.55 | —10.08 | +0.67 | — 9.41 | J. B. Baylor. | C. and G. S. Rep., 1881, App. 9. |
| Sargent. | 38 05 | 101 58 | 1878.61 | —12.74 | +0.67 | —12.07 | J. B. Baylor. | C. and G. S. Rep., 1881, App. 9. |
| Great Bend, Fort Zarah. | 38 24 | 98 43 | 1878.58 | —11.08 | +0.67 | —10.41 | J. B. Baylor. | C. and G. S. Rep., 1881, App. 9. |
| Emporia. | 38 26 | 96 12 | 1888.77 | —10.14 | +0.08 | —10.06 | J. B. Baylor. | MS. in C. and G. S. Office. |
| Lawrence. | 38 58 | 95 15 | 1877.87 | — 9.86 | +0.70 | — 9.16 | A. Braid. | C. and G. S. Rep., 1881, App. 9. |
| Junction City. | 39 02 | 96 53 | 1888.76 | —10.09 | +0.07 | —10.02 | J. B. Baylor. | MS. in C. and G. S. Office. |

Group 2.

| | | | | | | | | |
|---|---|---|---|---|---|---|---|---|
| Parsons. | 37 20 | 95 17 | 1879.65 | — 9.55 | +0.61 | — 8.94 | F. E. Nipher. | Trans. St. Louis Acad. Sc. |
| Fort Larned. | 38 10 | 98 57 | 1867.50 | —12.00 | +1.21 | —10.79 | M. R. Brown. | MS. in C. and G. S. Office. |
| Alexander, Rush Co. | 38 24 | 99 37 | 1879.7 | —12.17 | +0.60 | —11.57 | J. B. Kaufman. | MS. in C. and G. S. Office. |
| Hays City. | 38 52 | 99 25 | 1879.68 | —12.50* | +0.60 | —11.90 | J. B. Kaufman. | MS. in C. and G. S. Office. |
| Wallace. | 38 55 | 101 35 | 1872.78 | —13.30 | +0.92 | —12.38 | T. C. Hilgard. | Nat. Acad. Sc. |
| Ellis. | 38 56 | 99 40 | 1872.77 | —12.42 | +0.92 | —11.50 | T. C. Hilgard. | Nat. Acad. Sc. |
| New Fort Hays. | 38 59 | 99 20 | 1867.5 | —12.80 | +1.21 | —11.59 | M. R. Brown. | MS. in C. and G. S. Office. |
| Near Detroit (4 miles north) Dickinson Co. | 39 00 | 97 25 | 1879.71 | —10.75 | +0.60 | —10.15 | J. B. Kaufman. | MS. in C. and G. S. Office. |
| Manhattan, | 39 12 | 96 35 | 1872.76 | —10.86 | +0.92 | — 9.94 | T. C. Hilgard. | Nat. Acad. Sc. |
| Fort Leavenworth. | 39 21 | 94 54 | 1858.5 | —10.98† | +1.58 | — 9.40 | J. H. Simpson. | Stone's Mag. Var., 1878. |
| Stockton, Rooks Co. | 39 24 | 99 25 | 1888.4 | —11.64 | +0.09 | —11.55 | J. T. Locke. | MS. in C. and G. S. Office. |
| Salina. | 39 30 | 97 39 | 1872.77 | —12.80 | +0.92 | —11.88 | T. C. Hilgard. | Nat. Acad. Sc. |
| Goodland, Sherman Co. | 39 30(?) | 102 00(?) | 1888.5 | —12.40 | +0.09 | —12.31 | D. A. Long. | MS. in C. and G. S Office. |
| Vermillion Creek. | 39 57 | 96 16 | 1858.6 | —11.58† | +1.86 | — 9.72 | J. H. Simpson. | Stone's Mag. Var., 1878. |
| Big Blue River. | 40 00 | 96 35 | 1858.6 | —14.17† | +1.86 | —12.31 | J. H. Simpson. | Stone's Mag. Var., 1878. |

*Approximate. † An index correction of + 1° was applied to Captain Simpson's declinations.—[SCH.]

*Table of Observed Magnetic Declinations and Values reduced to the Year* 1890—Continued.

KENTUCKY.

Group 1.

| Name of station. | φ | λ | t | D | ΔD | $D_{1890}$ | Observer. | Reference. |
|---|---|---|---|---|---|---|---|---|
| | ° ′ | ° ′ | | ° | ° | ° | | |
| Hickman. | 36 34 | 89 12 | 1881.73 | — 5.79 | +0.60 | — 5.19 | J. B. Baylor. | C. and G. S. Rep., 1881, App. 9. |
| Mayfield. | 36 45 | 88 41 | 1881.74 | — 5.22 | +0.60 | — 4.62 | J. B. Baylor. | C. and G. S. Rep., 1881, App. 9. |
| Twenty-seven-mile Island. | 36 57 | 88 14 | 1865.15 | — 7.37 | +1.70 | — 5.67 | A. T. Mosman. | C. and G. S. Rep., 1881, App. 9. |
| Oakland. | 37 02 | 86 15 | 1871.85 | — 6.24 | +1.26 | — 4.98 | A. T. Mosman and E. Smith. | C. and G. S. Rep., 1881, App. 9. |
| Patterson's Landing. | 37 03 | 88 25 | 1865.18 | — 6.73 | +1.70 | — 5.03 | A. T. Mosman. | C. and G. S. Rep., 1881, App. 9. |
| Upper Point of Rocks. | 37 04 | 88 17 | 1865.13 | — 7.42 | +1.70 | — 5.72 | A. T. Mosman. | C. and G. S. Rep., 1881, App. 9. |
| Paducah. | 37 05 | 88 37 | 1865.10 | — 6.75 | +1.70 | — 5.05 | A. T. Mosman. | C. and G. S. Rep., 1881, App. 9. |
| Madisonville. | 37 19 | 87 33 | 1881.76 | — 5.10 | +0.60 | — 4.50 | J. B. Baylor. | C. and G. S. Rep., 1881, App. 9. |
| Livingston. | 37 23 | 84 20 | 1881.80 | — 1.61 | +0.60 | — 1.01 | J. B. Baylor. | C. and G. S. Rep., 1881, App. 9. |
| Leitchfield. | 37 30 | 86 22 | 1881.77 | — 3.32 | +0.60 | — 2.72 | J. B. Baylor. | C. and G. S. Rep., 1881, App. 9. |
| Stanford. | 37 31 | 84 44 | 1881.79 | — 4.26 | +0.60 | — 3.66 | J. B. Baylor. | C. and G. S. Rep, 1881, App. 9. |
| Lebanon. | 37 36 | 85 19 | 1881.78 | — 3.73 | +0.60 | — 3.13 | J. B. Baylor. | C. and G. S. Rep., 1881, App. 9. |
| Shelbyville. | 38 13 | 85 13 | 1871.90 | — 3.04 | +1.17 | — 1.87 | A. T. Mosman and E. Smith. | C. and G. S. Rep., 1881, App. 9. |
| Grayson. | 38 18 | 82 59 | 1881.84 | — 1.46 | +0.48 | — 0.98 | J. B. Baylor. | C. and G. S. Rep., 1881, App. 9. |
| Flemingsburg. | 38 26 | 83 46 | 1881.83 | — 1.76 | +0.48 | — 1.28 | J. B. Baylor. | C. and G. S. Rep., 1881, App. 9. |
| Cynthiana. | 38 26 | 84 25 | 1881.81 | — 2.47 | +0.48 | — 1.99 | J. B. Baylor. | C. and G. S. Rep., 1881, App. 9. |
| Falmouth, Coleman's farm. | 38 41 | 84 17 | 1872.01 | — 3.36 | +1.07 | — 2.29 | E. Goodfellow. | C. and G. S. Rep., 1881, App. 9. |

Group 2.

| | | | | | | | | |
|---|---|---|---|---|---|---|---|---|
| Guthrie. | 36 38 | 87 20 | 1875.47 | — 6.73 | +1.03 | — 5.70 | F. E. Hilgard. | Nat. Acad. Sc. |
| Williamsburg. | 36 47 | 84 10 | 1873.62 | — 2.07 | +1.06 | — 1.01 | F. E. Hilgard. | Nat. Acad. Sc. |
| Crofton. | 37 02 | 87 40 | 1875.48 | — 6.26 | +1.03 | — 5.23 | F. E. Hilgard. | Nat. Acad. Sc. |
| Cave City. | 37 10 | 85 55 | 1875.50 | — 5.91 | +0.97 | — 4.94 | F. E. Hilgard. | Nat. Acad. Sc. |
| Central City, Muhlenberg Co. | 37 20 | 87 15 | 1886.8 | — 3.59 | +0.24 | — 3.35 | T. C. du Pont. | MS. in C. and G. S. Office. |

*Table of Observed Magnetic Declinations and Values reduced to the Year* 1890—Continued.

KENTUCKY—Continued.

| Name of station. | φ | λ | t | D | ΔD | $D_{1890.0}$ | Observed. | Reference. |
|---|---|---|---|---|---|---|---|---|
| | ° ′ | ° ′ | | ° | ° | ° | | |
| Centre College, Danville. | 37 37 | 84 52 | 1889.4 | — 2.03 | +0.03 | — 2.00 | A. B. Nelson. | MS. in C. and G. S. Office. |
| Nicholasville. | 37 56 | 84 38 | 1875.51 | — 2.80 | +0.94 | — 1.86 | F. E. Hilgard. | Nat. Acad. Sc. |
| Portland. | 38 16 | 85 55 | 1875.50 | — 3.63 | +0.94 | — 2.69 | F. E. Hilgard. | Nat. Acad. Sc. |
| Kinniconnick Creek. | 38 30 | 83 19* | 1884.62 | — 1.68 | +0.31 | — 1.37 | J. W. Rand. | MS. in C. and G. S. Office. |
| Vanceburg, Lewis Co. | 38 36 | 83 17* | 1888.50 | — 2.02 | +0.08 | — 1.94 | J. W. Rand. | MS. in C. and G. S. Office. |
| Mouth of Salt Lick Creek. | 38 36 | 83 19* | 1884.51 | — 2.28 | +0.32 | — 1.96 | J. W. Rand. | MS. in C. and G. S. Office. |
| Maysville. | 38 41 | 83 41 | 1875.52 | — 0.01 | +0.86 | + 0.85 | F. E. Hilgard. | Nat. Acad. Sc. |
| Augusta. | 38 50 | 83 50 | 1805.5 | — 5.00 | +3.15 | — 1.85 | (Public Surveyor). | Sill. Jour., Vol. 34, 1838. |

* Supplied.

LOUISIANA. Group I.

| | | | | | | | | |
|---|---|---|---|---|---|---|---|---|
| South West Pass, near Stake Island. | 28 59 | 89 23 | 1872.17 | — 6.09 | +1.15 | — 4.94 | T. C. Hilgard. | C. and G. S. Rep., 1881, App. 9. |
| Isle Derniere. | 29 02 | 90 54 | 1853.14 | — 8.32 | +2.00 | — 6.32 | J. G. Oltmanns (F. H. Gerdes). | C. and G. S. Rep., 1881, App. 9. |
| Cubitt. | 29 10 | 89 15 | 1859.95 | — 7.53 | +1.75 | — 5.78 | J. G. Oltmanns (F. H. Gerdes). | C. and G. S. Rep., 1881, App. 9. |
| Pass à Loutre. | 29 11 | 89 01 | 1859.99 | — 7.50 | +1.75 | — 5.75 | J. G. Oltmanns (F. H. Gerdes). | C. and G. S. Rep., 1881, App. 9. |
| Fort Livingston. | 29 16 | 89 57 | 1853.02 | — 7.64 | +2.00 | — 5.64 | J. G. Oltmanns (F. H. Gerdes). | C. and G. S. Rep., 1881, App. 9. |
| Magnolia Base. | 29 32 | 89 47 | 1872.05 | — 6.78 | +1.16 | — 5.62 | T. C. Hilgard | C. and G. S. Rep., 1881, App. 9. |
| Marsh Island Lighthouse. | 29 35 | 92 02 | 1886.04 | — 6.90 | +0.28 | — 6.62 | J. B. Baylor. | MS. in C. and G. S. Office. |
| Morgan City. | 29 40 | 91 15 | 1886.38 | — 6.50 | +0.25 | — 6.25 | J. B. Baylor. | MS. in C. and G. S. Office. |
| Cote Blanche. | 29 44 | 91 43 | 1860.17 | — 8.36 | +1.74 | — 6.62 | J. G. Oltmanns (F. H. Gerdes). | C. and G. S. Rep., 1881, App. 9. |
| Barrel Key, Chandeleur Sound. | 29 54 | 89 08 | 1857.29 | — 7.60 | +1.86 | — 5.74 | S. Harris. | C. and G. S. Rep., 1881, App. 9. |
| New Orleans, City Park (S. V. S.). | 29 56 | 90 08 | 1872.12 | — 6.66 | | | T. C. Hilgard. | C. and G. S. Rep., 1881, App. 9. |
| New Orleans, Canal and Basin streets (S. V. S.). | 29 57 | 90 04 | 1858.26 | — 7.86 | ---- | — 5.91 | G. W. Dean. | C. and G. S. Rep., 1881, App. 9. |
| New Orleans Fair Grounds (S. V. S.). | 29 59 | 90 05 | 1880.23 | — 6.46 | | | J. B. Baylor. | C. and G. S. Rep., 1881, App. 9. |
| Shreveport. | 32 30 | 93 45 | 1888.98 | — 7.40 | +0.04 | — 7.36 | J. B. Baylor. | MS. in C. and G. S. Office. |

*Table of Observed Magnetic Declinations and Values reduced to the Year* **1890—Continued.**

LOUISIANA—Continued. Group 2.

| Name of station. | φ | λ | t | D | ΔD | $D_{1890.0}$ | Observer. | Reference. |
|---|---|---|---|---|---|---|---|---|
| | ° ′ | ° ′ | | ° | ° | ° | | |
| Balize, Passà Loutre. | 29 07 | 89 06 | 1838.5 | —10.25? | ------ | ------ | A. Talcott. | C. S. Rep., 1845. |
| Osgood Island. | 29 11 | 89 05 | 1872.18 | — 6.18 | +1.15 | — 5.03 | T. C. Hilgard. | Nat. Acad. Sc. |
| Brashear City. | 29 41 | 91 14 | 1872.22 | — 6.88 | +1.15 | — 5.73 | T. C. Hilgard. | Nat. Acad. Sc. |
| Public Survey Station. | 29 41 | 94 00 | 1840.5 | — 8.68 | +1.88 | — 6.80 | (Bound. Comm.). | Sill. Jour., Vol. 39, 1840. |
| Avery's Island. | 29 55 | 91 45(?) | 1872.20 | — 7.33 | +1.15 | — 6.18 | T. C. Hilgard. | Nat. Acad. Sc. |
| Baton Rouge. | 30 26 | 91 12 | 1872.25 | — 6.99 | +1.15 | — 5.84 | T. C. Hilgard. | Nat. Acad. Sc. |
| Cheneyville. | 31 00 | 92 15 | 1807.5 | — 9.33 | +1.59 | — 7.74 | (Pub. Sur.). | Sill. Jour., Vol. 34, 1838. |
| Alexandria. | 31 17 | 92 27 | 1872.30 | — 7.73 | +1.14 | — 6.59 | T. C. Hilgard. | Nat. Acad. Sc. |
| Gaines's Ferry. | 31 28 | 93 45 | 1840.4 | — 8.68 | +2.24 | — 6.44 | J. D. Graham. | Am. Phil. Soc., 1846. |
| Public Survey Station. | 31 40 | 92 32 | 1835.5 | — 8.67 | +2.25 | — 6.42 | (Pub. Sur.). | Sill. Jour., Vol. 39, 1840. |
| Public Survey Station. | 31 45 | 92 22 | 1834.5 | — 8.50 | +2.24 | — 6.26 | (Pub. Sur.). | Sill. Jour., Vol. 39, 1840. |
| Grand Ecore. | 31 48 | 93 07 | 1872.27 | — 7.87 | +1.14 | — 6.73 | T. C. Hilgard. | Nat. Acad. Sc. |
| Public Survey Station. | 31 50 | 92 32 | 1834.5 | — 8.50 | +2.24 | — 6.26 | (Pub. Sur.). | Sill. Jour., Vol. 39, 1840. |
| Public Survey Station. | 32 25 | 92 32 | 1836.5 | — 8.50 | +2.25 | — 6.25 | (Pub. Sur.). | Sill. Jour., Vol. 39, 1840. |
| Monroe. | 32 29 | 92 08 | 1872.32 | — 7.59 | +1.14 | — 6.45 | T. C. Hilgard. | Nat. Acad. Sc. |
| Public Survey Station. | 32 50 | 92 22 | 1835.5 | — 8.67 | +2.25 | — 6.42 | (Pub. Sur.). | Sill. Jour., Vol. 39, 1840. |

MAINE. Group 1.

| | | | | | | | | |
|---|---|---|---|---|---|---|---|---|
| Kittery Point (S.V.S.) | 43 05 | 70 43 | 1879.62 | +12.52 | ------ | +13.29 | J. B. Baylor. | C. and G. S. Rep., 1881, App. 9. |
| Cape Neddick. | 43 12 | 70 36 | 1851.66 | +11.15 | +2.57 | +13.72 | J. E. Hilgard. | C. and G. S. Rep., 1881, App. 9. |
| Agamenticus. | 43 13 | 70 42 | 1847.74 | +10.16 | +2.85 | +13.01 | T. J. Lee and R. H. Fauntleroy. | C. and G. S. Rep., 1881, App. 9. |
| Kennebunkport. | 43 21 | 70 28 | 1851.65 | +11.39 | +2.49 | +13.88 | J. E. Hilgard. | C. and G. S. Rep., 1881, App. 9. |
| Fletcher's Neck. | 43 27 | 70 20 | 1850.69 | +11.29 | +2.59 | +13.88 | J. E. Hilgard. | C. and G. S. Rep., 1881, App. 9. |
| Richmond Island. | 43 33 | 70 14 | 1850.71 | +12.30 | +2.47 | +14.77 | J. E. Hilgard. | C. and G. S. Rep., 1881, App. 9. |
| Portland, Bramhall Hill (S. V. S.). | 43 39 | 70 17 | 1887.79 | +13.85 | ------ | +14.08 | J. B. Baylor. | MS. in C. and G. S. Office. |
| Portland, Mount Joy Obs. (S. V. S.). | 43 40 | 70 15 | 1873.69 | +12.73 | ------ | +13.91 | T. C. Hilgard. | C. and G. S. Rep., 1881, App. 9. |

*Table of Observed Magnetic Declinations and Values reduced to the Year* 1890—Continued.

MAINE—Continued.

| Name of station. | $\varphi$ | $\lambda$ | $t$ | D | $\Delta$D | $D_{1890\cdot0}$ | Observer. | Reference. |
|---|---|---|---|---|---|---|---|---|
| | ° ′ | ° ′ | | ° | ° | ° | | |
| Harpswell. | 43 44 | 70 01 | 1863.55 | +14.42 | +1.54 | +15.96 | C. A. Schott. | C. and G. S. Rep., 1881, App. 9. |
| Mt. Independence. | 43 46 | 70 19 | 1849.77 | +11.77 | +2.54 | +14.31 | G. Davidson. | C. and G. S. Rep., 1881, App. 9. |
| Cape Small. | 43 47 | 69 51 | 1851.80 | +12.09 | +2.39 | +14.48 | G. W. Dean (A. D. Bache). | C. and G. S. Rep., 1881, App. 9. |
| Freeport. | 43 51 | 70 06 | 1863.53 | +14.20 | +1.54 | +15.74 | C. A. Schott. | C. and G. S. Rep., 1881, App. 9. |
| Brunswick. | 43 54 | 69 58 | 1873.70 | +14.30 | +0.86 | +15.16 | T. C. Hilgard. | C. and G. S. Rep., 1881, App. 9. |
| Bath. | 43 55 | 69 49 | 1863.52 | +12.86 | +1.54 | +14.40 | C. A. Schott. | C. and G. S. Rep., 1881, App. 9. |
| Damariscotta. | 44 02 | 69 32 | 1887.60 | +15.21 | +0.11 | +15.32 | J. B. Baylor. | MS. in C. and G. S. Office. |
| Mt. Pleasant. | 44 02 | 70 49 | 1851.64 | +14.53 | +2.40 | +16.93 | G. W. Dean. | C. and G. S. Rep., 1881, App. 9. |
| Rockland. | 44 06 | 69 06 | 1863.52 | +15.04 | +1.54 | +16.58 | C. A. Schott. | C. and G. S. Rep., 1881, App. 9. |
| Mt. Sebattis. | 44 09 | 70 05 | 1853.57 | +12.89 | +2.26 | +15.15 | J. E. Hilgard (A. D. Bache). | C. and G. S. Rep., 1881, App. 9. |
| Camden Village. | 44 12 | 69 05 | 1854.83 | +13.95 | +2.17 | +16.12 | G. W. Dean and R. J. Breckinridge. | C. and G. S. Rep., 1881, App. 9. |
| Mount Ragged. | 44 13 | 69 09 | 1854.74 | +14.28 | +2.18 | +16.46 | G. W. Dean and S. Harris. | C. and G. S. Rep., 1881, App. 9. |
| South West Harbor. | 44 15 | 68 18 | 1856.74 | +15.42 | +1.80 | +17.22 | S. Harris (A. D. Bache). | C. and G. S. Rep., 1881, App. 9. |
| Mount Desert. | 44 21 | 68 14 | 1856.77 | +15.24 | +1.80 | +17.04 | G. W. Dean (A. D. Bache). | C. and G. S. Rep., 1881, App. 9. |
| Belfast. | 44 26 | 69 01 | 1863.52 | +15.50 | +1.52 | +17.02 | C. A. Schott. | C. and G. S. Rep., 1881, App. 9. |
| Mill Bridge, Washington Co. | 44 32 | 67 54 | 1887.62 | +17.08 | +0.08 | +17.16 | J. B. Baylor. | MS. in C. and G. S. Office. |
| Howard. | 44 38 | 67 24 | 1859.61 | +18.53 | +1.38 | +19.91 | G. W. Dean (A. D. Bache). | C. and G. S. Rep., 1881, App. 9. |
| Mount Saunders. | 44 39 | 68 36 | 1856.52 | +14.99 | +1.81 | +16.80 | G. W. Dean and J. H. Toomer. | C. and G. S. Rep., 1881, App. 9. |
| Epping Base, East End. | 44 40 | 67 50 | 1857.5 | +16.33 | +1.62 | +17.95 | C. O. Boutelle. | C. and G. S. Rep., 1881, App. 9. |
| Mount Harris. | 44 40 | 69 09 | 1855.67 | +14.58 | +2.11 | +16.69 | G. W. Dean and T. M. McIver. | C. and G. S. Rep., 1881, App. 9. |
| Farmington, Franklin Co. | 44 40 | 70 09 | 1887.76 | +14.94 | +0.09 | +15.03 | J. B. Baylor. | MS. in C. and G. S. Office. |
| Machiasport, Washington Co. | 44 41 | 67 24 | 1887.64 | +17.72 | +0.04 | +17.76 | J. B. Baylor. | MS. in C. and G. S. Office. |

*Table of Observed Magnetic Declinations and Values reduced to the Year* 1890—Continued.

MAINE—Continued.

| Name of station. | φ | λ | t | D | ΔD | $D_{1890.0}$ | Observer. | Reference. |
|---|---|---|---|---|---|---|---|---|
| | ° ′ | ° ′ | | ° | ° | ° | | |
| Pittsfield, Central Maine Inst. | 44 46 | 69 29 | 1887.74 | +15.99 | +0.09 | +16.08 | J. B. Baylor. | MS. in C. and G. S. Office. |
| Bangor (S.V. S.). | 44 48 | 68 47 | 1879.64 | +16.49 | ------ | +16.95 | J. B. Baylor. | C. and G. S. Rep., 1881, App. 9. |
| Humpback. | 44 52 | 68 07 | 1858.65 | +15.80 | +1.54 | +17.34 | G. W. Dean, A. T. Mosman (A. D. Bache). | C. and G. S. Rep., 1881, App. 9. |
| Eastport, Fort Sullivan (S.V. S.). | 44 54 | 66 59 | 1887.65 | +18.59 | ------ | +18.92 | J. B. Baylor. | MS. in C. and G. S. Office. |
| Cooper. | 44 59 | 67 28 | 1859.69 | +16.53 | +1.37 | +17.90 | G. W. Dean (A. D. Bache). | C. and G. S. Rep., 1881, App. 9. |
| Calais. | 45 11 | 67 17 | 1857.71 | +15.35 | +1.50 | +16.85 | G. W. Dean and S. Harris. | C. and G. S. Rep., 1881, App. 9. |
| Greenville, Piscataquis Co. | 45 28 | 69 43 | 1887.73 | +16.80 | +0.04 | +16.84 | J. B. Baylor. | MS. in C. and G. S. Office. |
| Mattawamkeag. | 45 31 | 68 24 | 1887.72 | +17.94 | +0.04 | +17.98 | J. B. Baylor. | MS. in C. and G. S. Office. |
| Vanceboro', Washington Co. | 45 34 | 67 27 | 1887.70 | +18.36 | +0.04 | +18.40 | J. B. Baylor. | MS. in C. and G. S. Office. |
| Danforth, Washington Co. | 45 40 | 67 58 | 1887.71 | +18.38 | +0.04 | +18.42 | J. B. Baylor. | MS. in C. and G. S. Office. |
| Houlton, Aroostook Co. | 46 07 | 67 53 | 1887.68 | +19.00 | +0.04 | +19.04 | J. B. Baylor. | MS. in C. and G. S. Office. |
| Presque Isle, Aroostook Co. | 46 39 | 68 00 | 1887.66 | +20.06 | +0.04 | +20.10 | J. B. Baylor. | MS. in C. and G. S. Office. |

Group 2.

| | | | | | | | | |
|---|---|---|---|---|---|---|---|---|
| Hiram. | 43 50 | 70 45 | 1845.18 | +11.97 | +2.88 | +14.85 | —— Wadsworth. | MS. in C. and G. S. Office. |
| West Thomaston. | 43 56 | 69 05 | 1840.5 | +12.18 | +3.01 | +15.19 | (3d Geol. Rep.). | Getchell's Tables, 1880. |
| Raymond. | 43 57 | 70 24 | 1838.5 | + 9.75 | +3.36 | +13.11 | (3d Geol. Rep.). | Sill. Jour., Vol. 39, 1840. |
| Greenwood. | 44 20 | 70 45 | 1845.5 | +12.13 | +2.85 | +14.98 | (3d Geol. Rep.). | Getchell's Tables, 1880. |
| Bethel. | 44 27 | 70 51 | 1845.5 | +11.83 | +2.85 | +14.68 | (3d Geol. Rep.). | Getchell's Tables, 1880. |
| Waterville. | 44 28 | 69 32 | 1840.5 | +12.60 | +3.27 | +15.87 | (3d Geol. Rep.). | Getchell's Tables, 1880. |
| North Vassalborough. | 44 30 | 69 40 | 1880.5 | +15.58 | +0.48 | +16.06 | I. E. Getchell. | Getchell's Tables, 1880. |
| Rumford. | 44 30 | 70 26 | 1840.5 | +11.17 | +3.27 | +14.44 | (3d Geol. Rep.). | Getchell's Tables, 1880. |

*Table of Observed Magnetic Declinations and Values reduced to the Year* 1890—Continued.

MAINE—Continued.

| Name of station. | φ | λ | t | D | ΔD | $D_{1890\text{-}t}$ | Observer. | Reference. |
|---|---|---|---|---|---|---|---|---|
| | ° ′ | ° ′ | | ° | ° | ° | | |
| Dixfield. | 44 32 | 70 14 | 1840.5 | +12.17 | +3.27 | +15.44 | (3d Geol. Rep.). | Getchell's Tables, 1880. |
| Farmington. | 44 40 | 70 09 | 1840.5 | +11.50 | +3.27 | +14.77 | (3d Geol. Rep.). | Getchell's Tables, 1880. |
| Umbagog Lake. | 44 42 | 70 53 | 1838.5 | +13.00 | +3.42 | +16.42 | (3d Geol. Rep.). | Sill. Jour., Vol. 39, 1840. |
| Hampden. | 44 44 | 68 50 | 1840.5 | +13.37 | +3.27 | +16.64 | N. Barker. | Getchell's Tables, 1880. |
| Orono. | 44 54 | 68 40 | 1878.5 | +16.67 | +0.56 | +17.23 | (State College). | Getchell's Tables, 1880. |
| Mouth of St. Croix. | 45 05 | 67 12 | 1797.5 | +12.32 | +6.0 | +18.3 | (Chart.) | Sill. Jour., Vol. 34, 1838. |
| Greenville, near. | 45 24 | 69 35 | 1838.5 | +11.00 | +3.33 | +14.33 | (3d Geol. Rep.) | Sill. Jour., Vol. 39, 1840. |
| Forks of Penobscot. | 45 30 | 68 30 | 1840.5 | +15.42 | +3.17 | +18.59 | N. Barker. | Getchell's Tables, 1880. |
| Penobscot. | 45 30 | 68 45 | 1825.5 | +14.75 | +4.36 | +19.11 | J. Herrick. | Becquerel's Tr. du Mag., 1846. |
| Taschereau. | 45 49 | 70 24 | 1844.5 | +14.12 | +3.28 | +17.40 | J. D. Graham. | Trans. Roy. Soc., 1872. |
| Source of St. Croix. | 45 55 | 67 55 | 1817.5 | +14.00 | +4.90 | +18.90 | J. Johnson. | Sill. Jour., Vol. 34, 1838. |
| Near St. Croix River. | 45 57 | 67 47* | 1840.5 | +16.00 | +3.33 | +19.33 | J. D. Graham. | Trans. Roy. Soc., 1872. |
| Park's Hill. | 46 07 | 67 47* | 1841.5 | +16.15 | +3.25 | +19.40 | J. D. Graham. | Trans. Roy. Soc., 1872. |
| Canada Boundary. | 46 25 | 70 03 | 1850.5 | +15.75 | +2.60 | +18.35 | N. Barker. | Getchell's Tables, 1880. |
| Near Mars Hill. | 46 30 | 67 54 | 1856.5 | +18.00 | +1.51 | +19.51 | N. Barker. | Getchell's Tables, 1880. |
| Burgeois House and Massardis River. | 46 31 | 68 22 | 1842.0 | +17.34 | +3.12 | +20.46 | (Bound. Sur.). | Trans. Roy. Soc., 1872. |
| Blue Hill. | 46 38 | 67 47 | 1841.5 | +17.25 | +3.34 | +20.59 | (Bound. Sur.). | Trans. Roy. Soc., 1872. |
| Fort Fairfield. | 46 46 | 67 50 | 1841.5 | +17.45 | +3.34 | +20.79 | (Bound. Sur.). | Trans. Roy. Soc., 1872. |
| Aroostook Hill. | 46 47 | 67 47 | 1841.5 | +17.47 | +3.34 | +20.81 | J. D. Graham. | Trans. Roy. Soc., 1872. |
| Big Black River. | 46 57 | 69 27 | 1844.5 | +16.48 | +2.96 | +19.44 | J. D. Graham. | Trans. Roy. Soc., 1872. |
| Peconk Hill. | 46 59 | 67 47 | 1841.5 | +17.72 | +3.34 | +21.06 | J. D. Graham. | Trans. Roy. Soc., 1872. |
| St. Francis River. | 47 11 | 68 56 | 1842.5 | +17.05 | +3.18 | +20.23 | (Bound. Sur.). | Trans. Roy. Soc., 1872. |

*Corrected.

*Table of Observed Magnetic Declinations and Values reduced to the Year* 1890—Continued.

MAINE—Continued.

| Name of station. | φ | λ | t | D | ΔD | $D_{1890.0}$ | Observer. | Reference. |
|---|---|---|---|---|---|---|---|---|
| | ° ′ | ° ′ | | ° | ° | ° | | |
| Matwaska. | 47 12 | 68 10 | 1818.5 | +16.75 | +5.1 | +21.8 | J. Johnson. | Sill. Jour., Vol. 34, 1838. |
| Lake Cleveland. | 47 12 | 68 14 | 1842.5 | +17.88 | +3.18 | +21.06 | (Bound. Sur.). | Trans. Roy. Soc., 1872. |
| St. Francis River. | 47 14 | 69 01 | 1843.5 | +17.40 | +3.07 | +20.47 | (Bound. Sur.). | Trans. Roy. Soc., 1872. |
| Fort Kent. | 47 15 | 68 35 | 1843.5 | +17.50 | +3.07 | +20.57 | (Me. and Mass. Sur.) | Getchell's Tables, 1880. |
| Savage Island. | 47 16 | 68 44 | 1842.5 | +17.97 | +3.18 | +21.15 | (Bound. Sur.). | Trans. Roy. Soc., 1872. |
| Mouth of Green River | 47 19 | 68 10 | 1843.5 | +18.10 | +3.07 | +21.17 | (Bound. Sur.). | Trans. Roy. Soc., 1872. |

MARYLAND AND DISTRICT OF COLUMBIA. Group 1.

| | | | | | | | | |
|---|---|---|---|---|---|---|---|---|
| Mason's Landing. | 38 14 | 75 15 | 1856.66 | + 2.38 | +2.44 | + 4.82 | C. A. Schott. | C. and G. S. Rep., 1881, App. 9. |
| Davis. | 38 20 | 75 06 | 1853.73 | + 2.55 | +2.66 | + 5.21 | J. E. Hilgard. | C. and G. S. Rep., 1881, App. 9. |
| Calvert. | 38 22 | 76 24 | 1871.58 | + 2.82 | +1.32 | + 4.14 | A. T. Mosma | C. and G. S. Rep., 1881, App. 9. |
| Oxford. | 38 41 | 76 10 | 1856.64 | + 2.69 | +2.22 | + 4.91 | C. A. Schott. | C. and G. S. Rep., 1881, App. 9. |
| Marriott, trian. station. | 38 52 | 76 37 | 1849.46 | + 2.08 | +2.51 | + 4.59 | J. Hewston (A. D. Bache). | C. and G. S. Rep., 1881, App. 9. |
| Washington, south of C. and G. S. Office, Capitol Hill (S.V. S.). | 38 53 | 77 00 | 1889.73 | + 4.25 | | | E. D. Preston. | MS. in C. and G. S. Office |
| Washington, eastern park of Capitol. | 38 53 | 77 00 | 1856.62 | + 2.02 | ------ | + 4.33 | C. A. Schott. | C. and G. S. Rep., 1881, App. 9. |
| Washington, Second and C streets, S. E. | 38 53 | 77 00 | 1876.33 | + 3.31 | | | C. A. Schott. | C. and G. S. Rep., 1881, App. 9. |
| Washington, First and B streets, S. E. | 38 53 | 77 00 | 1886.45 | + 4.14 | | | C. A. Schott and E. D. Preston. | MS. in C. and G. S. Office. |
| Kent Island, south base. | 38 54 | 76 22 | 1845.42 | + 2.40 | +2.94 | + 5.34 | T. J. Lee. | C. and G. S. Rep., 1881, App. 9. |
| Hill, trian. station. | 38 54 | 76 53 | 1868.83 | + 2.85 | +1.47 | + 4.32 | C. O. Boutelle. | C. and G. S. Rep., 1881, App. 9. |
| Causten, Georgetown Heigh's. | 38 56 | 77 04 | 1855.77 | + 1.07 | +2.05 | + 3.12 | C. A. Schott. | C. and G. S. Rep., 1881, App. 9. |
| Taylor trian. station. | 39 00 | 76 28 | 1847.42 | + 2.30 | +2.66 | + 4.96 | T. J. Lee. | C. and G. S. Rep., 1881, App. 9. |
| Kent Island, Station 1. | 39 02 | 76 19 | 1849.49 | + 2.50 | +2.65 | + 5.15 | J. Hewston. | C. and G. S. Rep., 1881, App. 9. |

*Table of Observed Magnetic Declinations and Values reduced to the Year* 1890—Continued.

MARYLAND AND DISTRICT OF COLUMBIA—Continued.

| Name of station. | φ | λ | t | D | ΔD | $D_{1890.0}$ | Observer. | Reference. |
|---|---|---|---|---|---|---|---|---|
| | ° ′ | ° ′ | | ° | ° | ° | | |
| Webb, trian. station. | 39 05 | 76 40 | 1868.73 | + 2.93 | +1.37 | + 4.30 | C. O. Boutelle. | C. and G. S. Rep., 1881, App. 9. |
| Soper, trian. station. | 39 05 | 76 57 | 1850.57 | + 2.12 | +2.44 | + 4.56 | G. W. Dean (A. D. Bache). | C. and G. S. Rep., 1881, App. 9. |
| Stabler, trian. station. | 39 07 | 76 59 | 1869.65 | + 2.66(?) | +1.32 | + 3.98(?) | C. O. Boutelle. | C. and G. S. Rep., 1881, App. 9. |
| Bodkin Light. | 39 08 | 76 26 | 1847.31 | + 2.03 | +2.62 | + 4.65 | T. J. Lee. | C. and G. S. Rep., 1881, App. 9. |
| North Point. | 39 12 | 76 27 | 1847.32 | + 1.66 | +2.62 | + 4.28 | T. J. Lee. | C. and G. S. Rep., 1881, App. 9. |
| Fort McHenry (S. V. S.). | 39 16 | 76 35 | 1885.60 | + 4.49 | ------ | + 4.74 | J. B. Baylor. | MS. in C. and G. S. Office. |
| Pool's Island. | 39 17 | 76 16 | 1847.48 | + 2.49 | +2.61 | + 5.10 | T. J. Lee. | C. and G. S. Rep., 1881, App. 9. |
| Rosanne. | 39 18 | 76 43 | 1845.44 | + 2.18 | +2.73 | + 4.91 | T. J. Lee. | C. and G. S. Rep., 1881, App. 9. |
| Maryland Heights. | 39 20 | 77 43 | 1870.82 | + 2.93 | +1.31 | + 4.24 | C. O. Boutelle. | C. and G. S. Rep., 1881, App. 9. |
| Finlay. | 39 24 | 76 32 | 1846.29 | + 2.31 | +2.68 | + 4.99 | T. J. Lee and J. Locke. | C. and G. S. Rep., 1881, App. 9. |
| Osborne's Ruin. | 39 28 | 76 17 | 1845.47 | + 2.54 | +2.73 | + 5.27 | T. J. Lee. | C. and G. S. Rep., 1881, App. 9. |
| Susquehanna Light. | 39 32 | 76 05 | 1847.51 | + 2.23 | +2.61 | + 4.84 | T. J. Lee. | C. and G. S. Rep., 1881, App. 9. |
| Cumberland. | 39 39 | 78 45 | 1864.22 | + 1.53 | +1.96 | + 3.49 | A. T. Mosman. | C. and G. S. Rep., 1881, App. 9. |

Group 2.

| | | | | | | | | |
|---|---|---|---|---|---|---|---|---|
| Vienna, Dorchester Co. | 38 29 | 75 49 | 1886.63 | + 4.83 | +0.23 | + 5.06 | J. W. Thompson. | MS. in C. and G. S. Office. |
| Cheltenham. | 38 42 | 76 15 | 1889.39 | + 4.17 | +0.03 | + 4.20 | J. B. Kaufman. | MS. in C. and G. S. Office. |
| U. S. Naval Observatory. | 38 54 | 77 03 | 1866.83 | + 2.74 | +1.57 | + 4.31 | W. Harkness. | Smith'n Cont's to Kn., 1873. |
| Annapolis. | 38 59 | 76 29 | 1879.4 | + 4.43 | +0.62 | + 5.05 | S. W. Very. | MS. in C. and G. S. Office. |
| Lonaconing. | 39 34 | 78 58 | 1879.55 | + 3.00 | +0.74 | + 3.74 | F. E. Bracket. | MS. in C. and G. Office. |

*Table of Observed Magnetic Declinations and Values reduced to the Year* 1890—Continued.

MASSACHUSETTS. Croup 1.

| Name of station. | φ | λ | t | D | ΔD | $D_{1890.0}$ | Observer. | Reference. |
|---|---|---|---|---|---|---|---|---|
| | ° ′ | ° ′ | | ° | ° | ° | | |
| Nantucket Cliff (S. V. S.). | 41 17 | 70 06 | 1879.59 | +11.46 | ------ | +11.31 | J. B. Baylor. | C. and G. S. Rep., 1881, App. 9. |
| Nantucket Beach. | 41 18 | 70 06 | 1855.64 | + 9.97 | | | C. A. Schott. | C. and G. S. Rep., 1881, App. 9. |
| Sampson Hill. | 41 23 | 70 29 | 1846.56 | + 8.81 | +2.31 | +11.12 | T. J. Lee. | C. and G. S. Rep., 1881, App. 9. |
| Indian. | 41 26 | 70 41 | 1846.61 | + 8.82 | +2.31 | +11.13 | T. J. Lee. | C. and G. S. Rep., 1881, App. 9. |
| Vineyard Haven. | 41 28 | 70 36 | 1875.72 | +10.57 | +0.69 | +11.26 | J. M. Poole. | C. and G. S. Rep., 1881, App. 9. |
| Tarpaulin Cove. | 41 28 | 70 45 | 1846.60 | + 9.20 | +2.31 | +11.51 | T. J. Lee. | C. and G. S. Rep., 1881, App. 9. |
| Fairhaven. | 41 37 | 70 54 | 1845.80 | + 8.90 | +2.31 | +11.21 | T. J. Lee. | C. and G. S. Rep., 1881, App. 9. |
| Hyannis. | 41 38 | 70 18 | 1846.65 | + 9.36 | +2.31 | +11.67 | T. J. Lee and R. H. Fauntleroy. | C. and G. S. Rep., 1881, App. 9. |
| Chatham. | 41 40 | 69 57 | 1860.69 | +11.19 | +1.28 | +12.47 | C. A. Schott. | C. and G. S. Rep., 1881, App. 9. |
| Shootflying. | 41 41 | 70 21 | 1846.66 | + 9.67 | +2.31 | +11.98 | T. J. Lee and R. H. Fauntleroy. | C. and G. S. Rep., 1881, App. 9. |
| Copecut. | 41 43 | 71 04 | 1844.77 | + 9.15 | +2.58 | +11.73 | T. J. Lee. | C. and G. S. Rep., 1881, App. 9. |
| Cromeset. | 41 44 | 70 43 | 1887.47 | +11.77 | +0.12 | +11.89 | G. Bradford. | MS. in C. and G. S. Office. |
| Wellfleet. | 41 56 | 70 02 | 1860.70 | +10.72 | +1.44 | +12.16 | C. A. Schott. | C. and G. S. Rep., 1881, App. 9. |
| Manomet. | 41 56 | 70 36 | 1867.58 | +10.41* | +1.08 | +11.49 | C. O. Boutelle. | C. and G. S. Rep., 1881, App. 9. |
| Provincetown (S. V. S.). | 42 03 | 70 11 | 1860.71 | +11.39 | ------ | +12.38 | C. A. Schott. | C. and G. S. Rep., 1881, App. 9. |
| Springfield. | 42 06 | 72 32 | 1859.57 | + 8.65 | +1.96 | +10.61 | C. A. Schott. | C. and G. S. Rep., 1881, App. 9. |
| Blue Hill. | 42 13 | 71 07 | 1845.75 | + 9.22 | +2.48 | +11.70 | T. J. Lee. | C. and G. S. Rep., 1881, App. 9. |
| Easthampton. | 42 15 | 72 40 | 1862.52 | + 9.07 | +1.80 | +10.87 | E. Goodfellow (A. D. Bache). | C. and G. S. Rep., 1881, App. 9, |
| Nantasket. | 42 18 | 70 54 | 1847.67 | + 9.62 | +2.24 | +11.86 | T. J. Lee. | C. and G. S. Rep., 1881, App. 9. |
| South Boston (S. V. S.). | 42 20 | 71 02 | 1872.75 | +11.25 | ------ | +11.91 | A. H. Scott (E. Goodfellow.) | C. and G. S. Rep., 1881, App. 9. |
| Cambridge, Harvard Coll. Obs. (S.V.S.). | 42 23 | 71 08 | 1879.60 | +11.77 | ------ | +11.90 | J. B. Baylor. | C. and G. S. Rep., 1881, App. 9. |
| Chesterfield (S.V.S.). | 42 24 | 72 51 | 1859.56 | + 8.90 | ------ | +11.96 | C. A. Schott. | C. and G. S. Rep., 1881, App. 9. |

* Corrected.

*Table of Observed Magnetic Declinations and Values reduced to the Year* 1890—Continued.

MASSACHUSETTS—Continued.

| Name of station. | $\varphi$ | $\lambda$ | $t$ | D | $\Delta$D | $D_{1890.0}$ | Observer. | Reference. |
|---|---|---|---|---|---|---|---|---|
| | ° ′ | ° ′ | | ° | ° | ° | | |
| Little Nahant. | 42 26 | 70 56 | 1849.63 | + 9.68 | +2.52 | +12.20 | G. W. Keely. | C. and G. S. Rep., 1881, App. 9. |
| Wachusett. | 42 29 | 71 53 | 1860.72 | + 8.80 | +2.05 | +10.85 | G. W. Dean, R. E. Halter (A. D. Bache). | C. and G. S. Rep., 1881, App. 9. |
| Coddon's Hill. | 42 31 | 70 51 | 1849.68 | +11.83 | +3.36 | +15.19 | G. W. Keely. | C. and G. S. Rep., 1881, App. 9. |
| Baker's Island. | 42 32 | 70 47 | 1849.67 | +12.28 | +3.36 | +15.64 | G. W. Keely. | C. and G. S. Rep., 1881, App. 9. |
| Fort Lee, Salem (S. V. S.). | 42 32 | 70 52 | 1887.81 | +12.64 | ------ | +12.97 | J. B. Baylor. | MS. in C. and G. S. Office. |
| Deerfield. | 42 33 | 72 36 | 1859.56 | + 9.42 | +2.01 | +11.43 | C. A. Schott. | C. and G. S. Rep., 1881, App. 9. |
| Beaconhill, Gloucester. | 42 36 | 70 39 | 1859.52 | +12.05 | +1.80 | +13.85 | C. A. Schott. | C. and G. S. Rep., 1881, App. 9. |
| Thompson. | 42 37 | 70 44 | 1859.52 | +11.15 | +1.80 | +12.95 | C. A. Schott. | C. and G. S. Rep., 1881, App. 9. |
| Annisquam. | 42 39 | 70 41 | 1849.66 | +11.61 | +2.62 | +14.23 | G. W. Keely. | C. and G. S. Rep., 1881, App. 9. |
| Rockport. | 42 40 | 70 37 | 1859.52 | +11.62 | +1.80 | +13.42 | C. A. Schott. | C. and G. S. Rep., 1881, App. 9. |
| Ipswich. | 42 41 | 70 50 | 1859.53 | +11.23 | +1.80 | +13.03 | C. A. Schott. | C. and G. S. Rep., 1881, App. 9. |
| Plum Island, Newburyport (S.V.S.). | 42 48 | 70 49 | 1887.80 | +12.20 | ------ | +12.48 | J. B. Baylor. | MS. in C. and G. S. Office. |

Group 2.

| | | | | | | | | |
|---|---|---|---|---|---|---|---|---|
| Off Tarpaulin Cove. | 41 27* | 70 45* | 1775.5 | + 9.50 | +5.2 | +14.7 | ---- ------- ---- | Des Barres' Atl'c. Neptune, 1781. |
| Plymouth. | 41 58 | 70 39 | 1876.53 | +10.91 | +0.54 | +11.45 | F. E. Hilgard. | Nat. Acad. Sc. |
| Bridgewater. | 42 00 | 70 58 | 1882.6 | +11.43 | +0.42 | +11.85 | J. S. Leach. | MS. in C. and G. S. Office. |
| House Point Island, Cape Cod. | 42 03 | 70 04 | 1835.5 | + 9.33 | +3.13 | +12.46 | (Gov't Sur.). | Sill. Jour., Vol. 39, 1840. |
| Southwest corner of Mass. | 42 03 | 73 32 | 1787.56 | + 5.05 | +4.5 | + 9.5 | D. Rittenhouse. | MS. in C. and G. S. Office. |
| Southwick. | 42 04 | 72 46 | 1838.5 | + 8.25 | +3.53 | +11.78 | A. Holcomb. | Sill. Jour., 1840. |
| Near Springfield. | 42 05 | 72 36 | 1875 | + 9.35 | +1.00 | +10.35 | T. C. Ellis. | Rep. Ch. of Eng's, 1878. |
| Near South Hadley. | 42 12 | 72 36 | 1875 | + 9.47 | +1.00 | +10.47 | T. C. Ellis. | Rep. Ch. of Eng's, 1878. |
| Pittsfield. | 42 27 | 73 15 | 1886.50 | +10.05 | +0.24 | +10.29 | A. Walker. | MS. in C. and G. S. Office. |

* Supplied.

*Table of Observed Magnetic Declinations and Values reduced to the Year* 1890—Continued.

MASSACHUSETTS—Continued.

| Name of station. | φ | λ | t | D | ΔD | $D_{1890.0}$ | Observer. | Reference. |
|---|---|---|---|---|---|---|---|---|
| | ° ′ | ° ′ | | ° | ° | ° | | |
| Lynn. | 42 28 | 70 56 | 1877.5 | +11.25 | +0.68 | +11.93 | J. K. Harris. | MS. in C. and G. S. Office. |
| Beverly. | 42 33 | 70 52 | 1781.5 | + 7.05 | +6.7 | +13.7 | ---------- | Mem. Am. Acad., 1846. |
| Fitchburg. | 42 35 | 71 48 | 1876.55 | +10.73 | +0.88 | +11.61 | F. E. Hilgard. | Nat. Acad. Sc. |
| Greenfield. | 42 35 | 72 35 | 1876.57 | +10.34 | +1.02 | +11.36 | F. E. Hilgard. | Nat. Acad. Sc. |
| Lowell. | 42 39 | 71 20 | 1876.55 | +10.80 | +0.85 | +11.65 | F. E. Hilgard. | Nat. Acad. Sc. |
| Near Lowell. | 42 42 | 71 20 | 1741.2 | + 7.40 | ------ | ------ | R. Hazzen. | MS. in C. and G. S. Office. |
| North Adams. | 42 42 | 73 08 | 1876.57 | +10.51 | +0.86 | +11.37 | F. E. Hilgard. | Nat. Acad. Sc. |
| Williamstown (S.V. S.). | 42 43 | 73 13 | 1886.64 | +10.37 | ------ | +10.93 | A. Walker and T. H. Safford. | MS. in C. and G. S. Office. |

MICHIGAN. Group 1.

| | | | | | | | | |
|---|---|---|---|---|---|---|---|---|
| Ann Arbor. | 42 17 | 83 44 | 1870.66 | — 0.34 | +1.25 | + 0.91 | J. E. Hilgard. | MS. in C. and G. S. Office. |
| Kalamazoo. | 42 17 | 85 35 | 1890.50* | — 1.92 | —0.03 | — 1.95 | M. Baker. | MS. in C. and G. S. Office. |
| Detroit (S.V. S.). | 42 21 | 83 03 | 1885.67 | + 0.52 | ------ | + 0.58 | J. B. Baylor. | MS. in C. and G. S. Office. |
| Grand Haven (S.V. S.) | 43 05 | 86 13 | 1880.55 | — 2.43 | ------ | — 1.51 | J. B. Baylor. | C. and G. S. Rep., 1881, App. 9. |
| Mackinac. | 45 51 | 84 38 | 1880.57 | + 0.34 | +0.64 | + 0.98 | J. B. Baylor. | C. and G. S. Rep., 1881, App. 9. |
| Sault de Ste. Marie, near Fort Brady (S. V. S.). | 46 30 | 84 20 | 1880.60 | + 1.08 | ------ | + 1.52 | J. B. Baylor. | C. and G. S. Rep., 1881, App. 9. |
| Ontonagon. | 46 52 | 89 20 | 1880.63 | — 4.69 | +0.41 | — 4.28 | J. B. Baylor. | C. and G. S. Rep., 1881, App. 9. |

* Added, Sept., 1890.

Group 2.

| | | | | | | | | |
|---|---|---|---|---|---|---|---|---|
| Near Buffalo. | 41 48 | 86 45 | 1872.5 | — 4.80 | +1.02 | — 3.78 | H. Custer. | P. P., U. S. Eng's, No. 24, 1882. |
| La Salle. | 41 50 | 83 25 | 1877.57 | — 0.22 | +0.75 | + 0.53 | A. C. Lamson. | P. P., U. S. Eng's, No. 24, 1882. |
| Stony Point. | 41 56 | 83 16 | 1877.67 | — 0.30 | +0.74 | + 0.44 | A. C. Lamson. | P. P., U. S. Eng's, No. 24, 1882. |
| Saint Joseph. | 42 06 | 86 30 | 1871.6 | — 3.88 | +1.41 | — 2.47 | H. Custer. | P. P., U. S. Eng's, No. 24, 1882. |
| Ypsilanti (S. V. S.). | 42 14 | 83 38 | 1888.64 | + 1.50 | ------ | + 1.48 | C. S. Woodard. | MS. in C. and G. S. Office. |

*Table of Observed Magnetic Declinations and Values reduced to the Year* 1890—Continued.

MICHIGAN—Continued.

| Name of station. | φ | λ | t | D | ΔD | $D_{1890.0}$ | Observer. | Reference. |
|---|---|---|---|---|---|---|---|---|
| | ° ′ | ° ′ | | ° | ° | ° | | |
| Seven miles north of St. Joseph. | 42 14 | 86 22 | 1871.6 | — 3.95 | +1.41 | — 2.54 | H. Custer. | P. P., U. S. Eng's, No. 24, 1882. |
| Marshall. | 42 16 | 84 58 | 1876.79 | — 1.70 | +0.79 | — 0.91 | C. F. Powell. | Rep. Ch. of Eng's, 1877. |
| South Haven. | 42 24 | 86 16 | 1871.6 | — 3.50 | +1.41 | — 2.09 | F. U. Farquhar and H. Custer. | P. P., U. S. Eng's, No. 24, 1882. |
| Public Survey Station. | 42 30 | 84 22 | 1826.5 | — 4.42 | +4.16 | — 0.26 | (Pub. Sur.). | Sill. Jour., Vol. 39, 1840. |
| Five miles north of Milk River. | 42 31 | 82 52 | 1868.5 | — 0.70 | +1.07 | + 0.37 | A. Molitor. | P. P., U. S. Eng's, No. 24, 1882. |
| Plumberville. | 42 32 | 86 14 | 1871.6 | — 2.77 | +1.41 | — 1.36 | H. Custer. | P. P., U. S. Eng's, No. 24, 1882. |
| Mouth of St. Clair River. | 42 34 | 82 40 | 1842.5 | — 1.42 | +2.54 | + 1.12 | J. N. Macomb. | P. P., U. S. Eng's, No. 24, 1882. |
| Middle Pass of St. Clair River. | 42 34 | 82 41 | 1856.8 | — 0.80 | +1.75 | + 0.95 | G. W. Lamson. | P. P., U. S. Eng's, No. 24, 1882. |
| General Land Survey Station. | 42 35 | 85 48 | 1826.5 | — 5.36 | +3.72 | — 1.64 | (Pub. Sur.). | MS. in C. and G. S. Office. |
| General Land Survey Station. | 42 35 | 85 56 | 1830.2 | — 5.20 | +3.63 | — 1.57 | (Pub. Sur.). | MS. in C. and G. S. Office. |
| General Land Survey Station. | 42 35 | 86 03 | 1831.8 | — 5.58 | +3.63 | — 1.95 | (Pub. Sur.). | MS. in C. and G. S. Office. |
| Algonac. | 42 37 | 82 32 | 1866.96 | — 0.07 | +1.15 | + 1.08 | O. N. Chaffee. | P. P., U. S. Eng's, No. 24, 1882. |
| Saugatuck. | 42 40 | 86 12 | 1871.6 | — 2.37 | +1.41 | — 0.96 | H. Custer. | P. P., U. S. Eng's, No. 24, 1882. |
| Black Leg Harbor. | 42 46 | 86 12 | 1871.63 | — 2.40 | +1.41 | — 0.99 | F. U. Farquhar and L. Foote. | P. P., U. S. Eng's, No. 24, 1882. |
| Public Survey Station. | 42 50 | 84 22 | 1826.5 | — 4.92 | +3.87 | — 1.05 | (Pub. Sur.). | Sill. Jour., Vol. 39, 1840. |
| Stag Island, St. Clair River. | 42 53 | 82 27 | 1866.5 | — 0.37 | +1.38 | + 1.01 | F. M. Towar. | P. P., U. S. Eng's, No. 24, 1882. |
| Grand River. | 42 55 | 86 10 | 1837.5 | — 4.50 | +3.70 | — 0.80 | (Geol. Rep.). | Sill. Jour., Vol. 39, 1840. |
| Fort Gratiot. | 43 00 | 82 25 | 1873.53 | + 0.62 | +0.92 | + 1.54 | A. N. Lee. | U. S. Sur. N. and N. W. Lakes, 1873. |
| Public Survey Station. | 43 00 | 84 22 | 1831.5 | — 3.45 | +3.72 | + 0.27 | (Pub. Sur.). | Sill. Jour., Vol. 39, 1840. |
| Two miles south of Lake Port. | 43 05 | 82 28 | 1859.75 | + 0.25 | +2.07 | + 2.32 | W. H. Hearding. | P. P., U. S. Eng's, No. 24, 1882. |
| Four miles south of Lexington. | 43 12 | 82 30 | 1859.75 | + 0.60 | +2.07 | + 2.67 | W. H. Hearding. | P. P., U. S. Eng's, No. 24, 1882. |
| Muskegon. | 43 13 | 86 19 | 1871.50 | — 4.03 | +2.06 | — 1.97 | L. Foote. | P. P., U. S. Eng's, No. 24, 1882. |

*Table of Observed Magnetic Declinations and Values reduced to the Year* 1890—Continued.

MICHIGAN—Continued.

| Name of station. | $\varphi$ | $\lambda$ | $t$ | D | $\Delta$D | $D_{1890.0}$ | Observer. | Reference. |
|---|---|---|---|---|---|---|---|---|
| | ° ′ | ° ′ | | ° | ° | ° | | |
| One mile south of Lexington. | 43 15 | 82 31 | 1859.64 | + 1.00 | +2.08 | + 3.08 | W. H. Hearding. | P. P., U. S. Eng's, No. 24, 1882. |
| One mile north of Lexington. | 43 16 | 82 31 | 1859.66 | + 1.35 | +2.08 | + 3.43 | W. H. Hearding. | P. P., U. S. Eng's, No. 24, 1882. |
| Public Survey Station. | 43 19 | 85 59 | 1837.5 | — 6.25 | +3.70 | — 2.55 | (Pub. Sur.). | Sill. Jour., Vol. 39, 1840. |
| Three miles south of New London Point. | 43 20 | 82 31 | 1858.77 | + 1.23 | +2.13 | + 3.36 | W. H. Hearding. | P. P., U. S. Eng's, No. 24, 1882. |
| Public Survey Station. | 43 20 | 84 22 | 1832.5 | — 3.00 | +3.69 | + 0.69 | (Pub. Sur.). | Sill. Jour., Vol. 39, 1840. |
| Wahley. | 43 22 | 82 32 | 1860.36 | + 1.08 | +1.86 | + 2.94 | W. P. Smith. | U. S. Lake Sur. Rep., 1882. |
| Whitehall. | 43 22 | 86 25 | 1871.51 | — 4.03 | +2.06 | — 1.97 | F. U. Farquhar and L. Foote. | P. P., U. S. Eng's, No. 24, 1882. |
| New London Point. | 43 23 | 82 31 | 1858.76 | + 0.72 | +2.13 | + 2.85 | W. H. Hearding. | P. P., U. S. Eng's, No. 24, 1882. |
| Saint Louis. | 43 24 | 84 36 | 1876.79 | — 0.98 | +0.99 | + 0.01 | D. W. Lockwood. | Rep. Ch. of Eng's, 1877. |
| Port Sanilac. | 43 25 | 82 32 | 1858.71 | + 0.50 | +2.14 | + 2.64 | W. H. Hearding. | P. P., U. S. Eng's, No. 24, 1882. |
| Saginaw. | 43 25 | 83 58 | 1876.72 | — 0.39 | +1.01 | + 0.62 | D. W. Lockwood. | Rep. Ch. of Eng's, 1877. |
| Miller's Creek. | 43 28 | 82 33 | 1858.67 | + 0.72 | +2.14 | + 2.86 | W. H. Hearding. | P. P., U. S. Eng's, No. 24. 1882. |
| Cherry Creek. | 43 30 | 82 34 | 1858.65 | + 0.70 | +2.14 | + 2.84 | W. H. Hearding. | P. P., U. S. Eng's, No. 24, 1882. |
| Little Point aux Sables. | 43 31 | 85 54 | 1837.5 | — 6.00 | +3.70 | — 2.30 | (Geol. Rep.). | Sill. Jour., Vol. 39, 1840. |
| Benona. | 43 34 | 86 30 | 1870.65 | — 4.93 | +1.88 | — 3.05 | J. W. Cuyler. | P. P., U. S. Eng's, No. 24, 1882. |
| Elk Creek. | 43 37 | 82 35 | 1858.61 | + 0.58 | +2.14 | + 2.72 | W. H. Hearding. | P. P., U. S. Eng's, No. 24, 1882. |
| Three miles W. of Quannakissee River. | 43 37 | 83 43 | 1857.73 | — 1.53 | +2.20 | + 0.67 | W. H. Hearding. | P. P., U. S. Eng's, No. 24, 1882. |
| Saginaw River. | 43 39 | 83 51 | 1856.5 | — 1.47 | +2.28 | + 0.81 | (U. S. Lake Sur.). | MS. of W. F. Raynolds. |
| Forestville. | 43 40 | 82 34 | 1873.53 | + 1.51 | +1.15 | + 2.66 | A. N. Lee. | U. S. Lake Sur. Rep., 1873. |
| Four miles N. W. of Saginaw River. | 43 41 | 83 55 | 1856.5 | — 1.47 | +2.28 | + 0.81 | W. H. Hearding. | P. P., U. S. Eng's, No. 24, 1882. |
| White Rock. | 43 43 | 82 36 | 1858.59 | + 0.35 | +2.14 | + 2.49 | W. H. Hearding. | P. P., U. S. Eng's, No. 24, 1882. |

*Table of Observed Magnetic Declinations and Values reduced to the Year* 1890—Continued.

MICHIGAN—Continued.

| Name of station. | $\varphi$ | $\lambda$ | $t$ | D | $\Delta$D | $D_{1890.0}$ | Observer. | Reference. |
|---|---|---|---|---|---|---|---|---|
| | ° ′ | ° ′ | | ° | ° | ° | | |
| Père Marquette River | 43 44 | 85 43 | 1837.5 | — 4.57 | +3.70 | — 0.87 | (Geol. Rep.). | Sill. Jour., Vol. 39, 1840. |
| Public Survey Station. | 43 45 | 84 22 | 1832.5 | — 2.92 | +3.69 | — 0.77 | (Pub. Sur.). | Sill. Jour., Vol. 39, 1840. |
| Nyahquing Point. | 43 46 | 83 56 | 1856.5 | — 1.23 | +2.28 | — 1.05 | W. H. Hearding. | P. P., U. S. Eng's, No. 24, 1882. |
| Sharpe's Bay. | 43 47 | 82 36 | 1858.53 | + 0.30 | +2.15 | + 2.45 | W. H. Hearding. | P. P., U. S. Eng's, No. 24, 1882. |
| Pentwater. | 43 47 | 86 26 | 1871.6 | — 4.25 | +1.80 | — 2.45 | F. U. Farquhar. | P. P., U. S. Eng's, No. 24, 1882. |
| Crane's Point. | 43 50 | 82 38 | 1858.53 | + 0.27 | +2.15 | + 2.42 | W. H. Hearding. | P. P., U. S. Eng's, No. 24, 1882. |
| South of Pointe aux Barques. | 43 51 | 82 42 | 1835.5 | — 1.63 | +3.39 | + 1.76 | (Geol. Rep.). | Sill. Jour., Vol. 39, 1840. |
| Twenty miles W. of Pointe aux Barques. | 43 51 | 83 06 | 1835.5 | — 2.10 | +3.39 | + 1.29 | (Geol. Rep.). | Sill. Jour., Vol. 39, 1840. |
| Stony Island. | 43 52 | 83 26 | 1857.49 | — 0.40 | +2.22 | + 1.82 | W. H. Hearding. | P. P., U. S. Eng's, No. 24, 1882. |
| Forest Bay. | 43 53 | 82 40 | 1858.5 | — 0.05 | +2.15 | + 2.10 | W. H. Hearding. | P. P., U. S. Eng's, No. 24, 1882. |
| Sand Point. | 43 55 | 83 23 | 1858.71 | — 0.53 | +2.14 | + 1.61 | W. P. Smith. | U. S. Lake Sur. Rep., 1859. |
| Stafford. | 43 57 | 82 42 | 1858.5 | + 0.20 | +2.15 | + 2.35 | W. H. Hearding. | P. P., U. S. Eng's, No. 24, 1882. |
| Père Marquette. | 43 57 | 86 27 | 1871.6 | — 4.30 | +1.80 | — 2.50 | F. U. Farquhar. | P. P., U. S. Eng's, No. 24, 1882. |
| Near Oak Point. | 43 59 | 83 12 | 1857.71 | — 1.08 | +2.20 | + 1.12 | W. H. Hearding. | P. P., U. S. Eng's, No. 24, 1882. |
| Pointe aux Gres. | 43 59 | 83 40 | 1857.66 | — 1.50 | +2.20 | + 0.70 | G. W. Lamson. | P. P., U. S. Eng's, No. 24, 1882. |
| Little Lake Sable. | 43 59 | 86 28 | 1866.74 | — 4.20 | +2.18 | — 2.02 | A. F. Chaffee. | P. P., U. S. Eng's, No. 24, 1882. |
| Two miles N. of Stafford. | 44 00 | 82 45 | 1858.5 | — 0.13 | +2.15 | + 2.02 | W. H. Hearding. | P. P., U. S. Eng's, No. 24, 1882. |
| Near Pointe aux Barques Lt. | 44 00 | 82 46 | 1858.5 | — 0.08 | +2.15 | + 2.07 | W. H. Hearding. | P. P., U. S. Eng's, No. 24, 1882. |
| Partridge River. | 44 00 | 83 03 | 1857.59 | — 0.13 | +2.21 | + 2.08 | G. W. Lamson. | P. P., U. S. Eng's, No. 24, 1882. |
| Hat Point. | 44 00 | 83 06 | 1857.70 | — 0.67 | +2.20 | + 1.53 | G. W. Lamson. | P. P., U. S. Eng's, No. 24, 1882. |
| Pointe aux Barques. | 44 01 | 82 47 | 1857.5 | + 0.01 | +2.22 | + 2.23 | (U. S. Lake Sur.). | MS. of W. F. Raynolds. |
| Willow River. | 44 02 | 82 50 | 1857.43 | + 0.20 | +2.22 | + 2.42 | W. H. Hearding. | P. P., U. S. Eng's, No. 24, 1882. |

*Table of Observed Magnetic Declinations and Values reduced to the Year* 1890—**Continued.**

MICHIGAN—Continued.

| Name of station. | φ | λ | t | D | ΔD | $D_{1890.0}$ | Observer. | Reference. |
|---|---|---|---|---|---|---|---|---|
| | ° ′ | ° ′ | | ° | ° | ° | | |
| Gravelly Point. | 44 03 | 83 34 | 1857.67 | — 1.42 | +2.20 | + 0.78 | G. W. Lamson. | P. P., U. S. Eng's, No. 24, 1882. |
| Pointe aux Barques. | 44 04 | 82 57 | 1857.54 | 0.00 | +2.21 | + 2.21 | W. H. Hearding. | P. P., U. S. Eng's, No. 24, 1882. |
| Six miles N. of White Stone Point. | 44 12 | 83 33 | 1857.47 | — 0.57 | +2.22 | + 1.65 | G. W. Lamson. | P. P., U. S. Eng's, No. 24, 1882. |
| Manistee. | 44 15 | 86 20 | 1866.7 | — 4.00 | +1.95 | — 2.05 | W. T. Casgrain. | P. P., U. S. Eng's, No. 24, 1882. |
| Four miles S. of Tawas Point. | 44 18 | 83 24 | 1856.5 | — 2.08 | +2.15 | + 0.07 | G. W. Lamson. | P. P., U. S. Eng's, No. 24, 1882. |
| Sable River. | 44 25 | 83 19 | 1856.5 | — 2.20 | +2.15 | — 0.05 | W. H. Hearding. | P. P., U. S. Eng's, No. 24, 1882. |
| North Bar Lake. | 44 29 | 86 15 | 1866.72 | — 3.27 | +1.95 | — 1.32 | O. N. Chaffee. | P. P., U. S. Eng's, No. 24, 1882. |
| Geological Station. | 44 31 | 83 50 | 1838.5 | — 2.00 | +2.95 | + 0.95 | (Geol. Rep.). | Sill. Jour., Vol. 39, 1840. |
| Geological Station. | 44 31 | 84 28 | 1838.5 | — 2.75 | +2.95 | + 0.20 | (Geol. Rep.). | Sill. Jour., Vol. 39, 1840. |
| Geological Station. | 44 31 | 84 56 | 1838.5 | — 2.83 | +2.95 | + 0.12 | (Geol. Rep.). | Sill. Jour., Vol. 39, 1840. |
| Michigan Shore. | 44 31 | 85 32 | 1838.5 | — 4.50 | +2.95 | — 1.55 | (Geol. Rep.). | Sill. Jour., Vol. 39, 1840. |
| Four miles S. of Harrisville. | 44 36 | 83 19 | 1858.65 | — 0.48 | +2.03 | + 1.55 | H. C. Penny. | P. P., U. S. Eng's, No. 24, 1882. |
| River aux Becs Scies. | 44 37 | 86 15 | 1866.48 | — 4.28 | +1.92 | — 2.36 | A. F. Chaffee. | P. P., U. S. Eng's, No. 24, 1882. |
| Sturgeon Point. | 44 43 | 83 14 | 1858.74 | — 1.03 | +2.03 | + 1.00 | W. P. Smith. | U. S. Lake Sur. Rep., 1859. |
| The Cove. | 44 46 | 83 17 | 1858.69 | + 0.32 | +2.03 | + 2.35 | H. C. Penny. | P. P., U. S. Eng's, No. 24, 1882. |
| Grand Traverse Bay. | 44 46 | 85 30 | 1860.71 | — 1.87 | +2.21 | + 0.34 | W. H. Hearding. | P. P., U. S. Eng's, No. 24, 1882. |
| Traverse City. | 44 46 | 85 37 | 1860.5 | — 2.39 | +2.22 | — 0.17 | W. P. Smith and H. C. Penny. | MS. of W. F. Raynolds and P. P., U. S. Eng's, No. 24, 1882. |
| Grand Traverse Bay. | 44 50 | 85 33 | 1860.73 | — 2.42 | +2.21 | — 0.21 | W. H. Hearding. | P. P., U. S. Eng's, No. 24, 1882. |
| Grand Traverse Bay. | 44 51 | 85 27 | 1860.67 | — 1.48 | +2.21 | + 0.73 | W. H. Hearding. | P. P., U. S. Eng's, No. 24, 1882. |
| Grand Traverse Bay. | 44 51 | 85 39 | 1860.7 | — 2.77 | +2.21 | — 0.56 | H. C. Penny. | P. P., U. S. Eng's, No. 24, 1882. |

*Table of Observed Magnetic Declinations and Values reduced to the Year* 1890—Continued.

MICHIGAN—Continued.

| Name of station. | $\varphi$ | $\lambda$ | $t$ | D | $\Delta D$ | $D_{1890.0}$ | Observer. | Reference. |
|---|---|---|---|---|---|---|---|---|
| | ° ′ | ° ′ | | ° | ° | ° | | |
| Grand Traverse Bay, Tucker's Point. | 44 53 | 85 34 | 1860.7 | — 2.45 | +2.21 | — 0.24 | W. H. Hearding. | P. P., U. S. Eng's, No. 24, 1882. |
| Grand Traverse Bay. | 44 54 | 85 25 | 1860.67 | — 1.75 | +2.21 | + 0.46 | W. H. Hearding. | P. P., U. S. Eng's, No. 24, 1882. |
| Glen Arbor. | 44 54 | 86 00 | 1860.46 | — 3.53 | +2.22 | — 1.31 | H. C. Penny. | P. P., U. S. Eng's, No. 24, 1882. |
| Grand Traverse Bay. | 44 57 | 85 34 | 1860.72 | — 2.10 | +2.21 | + 0.11 | W. H. Hearding. | P. P., U. S. Eng's, No. 24, 1882. |
| North Unity. | 44 57 | 85 54 | 1860.55 | — 3.53 | +2.22 | — 1.31 | H. C. Penny. | P. P., U. S. Eng's, No. 24, 1882. |
| Grand Traverse Bay, Old Mission Point. | 44 58 | 85 29 | 1860.7 | — 2.33 | +2.21 | — 0.12 | W. H. Hearding. | P. P., U. S. Eng's, No. 24, 1882. |
| Good Harbor Leland. | 44 58 | 85 47 | 1860.52 | — 3.52 | +2.22 | — 1.30 | H. C. Penny. | P. P., U. S. Eng's, No. 24, 1882. |
| Grand Traverse Bay, Sutton's Bay. | 45 00 | 85 36 | 1860.72 | — 3.45 | +2.21 | — 1.24 | H. C. Penny. | P. P., U. S. Eng's, No. 24, 1882. |
| Thunder Bay. | 45 02 | 83 09 | 1858.64 | + 1.23 | +1.93 | + 3.16 | W. P. Smith. | U. S. Lake Sur., G. G. Meade, 1859. |
| Thunder Bay, north point. | 45 02 | 83 16 | 1858.5 | + 1.00 | +1.94 | + 2.94 | G. W. Lamson. | P. P., U. S. Eng's, No. 24, 1882. |
| South Manitou Island, east side. | 45 02 | 86 06 | 1860.69 | — 3.53 | +2.21 | — 1.32 | D. F. Henry and W. P. Smith. | P. P., U. S. Eng's, No. 24, 1882, and U. S. Lake Sur. Rep., 1882. |
| Alpena. | 45 04 | 83 25 | 1858.5 | + 0.60 | +1.94 | + 2.54 | G. W. Lamson. | P. P., U. S. Eng's, No. 24, 1882. |
| Menomonee River. | 45 05 | 87 35 | 1863.8 | — 6.33 | +2.02 | — 4.31 | D. F. Henry. | P. P., U. S. Eng's, No. 24, 1882. |
| Near N. end of Torch Light Lake. | 45 06 | 85 22 | 1860.64 | — 2.33 | +2.21 | — 0.12 | W. H. Hearding. | P. P., U. S. Eng's, No. 24, 1882. |
| North Manitou Island, west side. | 45 06 | 86 04 | 1860.5 | — 3.48 | +2.22 | — 1.26 | D. F. Henry. | P. P., U. S. Eng's, No. 24, 1882. |
| North Manitou Island, east side. | 45 07 | 85 59 | 1860.5 | — 4.02 | +2.22 | — 1.80 | D. F. Henry. | P. P., U. S. Eng's, No. 24, 1882. |
| Grand Traverse Bay. | 45 08 | 85 22 | 1860.62 | — 2.18 | +2.21 | + 0.03 | W. H. Hearding. | P. P., U. S. Eng's, No. 24, 1882. |
| North Port. | 45 08 | 85 36 | 1860.66 | — 2.50 | +2.21 | — 0.29 | H. C. Penny. | P. P., U. S. Eng's, No. 24, 1882. |
| Middle Island. | 45 12 | 83 19 | 1858.59 | + 1.07 | +1.93 | + 3.00 | H. C. Penny. | P. P., U. S. Eng's, No. 24, 1882. |
| Near Fisherman's Isd. | 45 17 | 85 20 | 1860.53 | — 3.23 | +2.09 | — 1.14 | W. H. Hearding. | P. P., U. S. Eng's, No. 24, 1882. |
| False Presque Isle. | 45 18 | 83 37 | 1817.5 | — 2.98 | ------ | ------- | H. W Bayfield. | Phil. Trans. Roy. Soc., 1872. |

*Table of Observed Magnetic Declinations and Values reduced to the Year* 1890—Continued.

MICHIGAN—Continued.

| Name of station. | φ | λ | t | D | ΔD | $D_{1890.0}$ | Observer. | Reference. |
|---|---|---|---|---|---|---|---|---|
| | ° ′ | ° ′ | | ° | ° | ° | | |
| Point Rochereau. | 45 18 | 87 26 | 1863.8 | — 4.72 | +2.02 | — 2.70 | A. Molitor. | P. P., U. S. Eng's, No. 24, 1882. |
| Presque Isle Harbor. | 45 20 | 83 27 | 1858.46 | — 0.80 | +1.94 | + 1.14 | H. C. Penny. | P. P., U. S. Eng's, No. 24, 1882. |
| Little Traverse Bay. | 45 20 | 85 15 | 1860.53 | — 2.48 | +2.09 | — 0.39 | W. H. Hearding. | P. P., U. S. Eng's, No. 24, 1882. |
| Little Traverse Bay. | 45 22 | 85 02 | 1860.47 | — 3.45 | +2.09 | — 1.36 | W. H. Hearding. | P. P., U. S. Eng's, No. 24, 1882. |
| Little Traverse Bay. | 45 22 | 85 09 | 1860.50 | — 2.67 | +2.09 | — 0.58 | W. H. Hearding. | P. P., U. S. Eng's No. 24, 1882. |
| Little Traverse Bay. | 45 23 | 84 55 | 1860.5 | — 3.45 | +2.09 | — 1.36 | W. H. Hearding. | P. P., U. S. Eng's, No. 24, 1882. |
| South Fox Island. | 45 23 | 85 50 | 1862.73 | — 3.57 | +1.98 | — 1.59 | J. R. Mayer. | P. P., U. S. Eng's, No. 24, 1882. |
| Adams Point. | 45 24 | 83 41 | 1859.51 | — 0.68 | +1.88 | + 1.20 | H. C. Penny. | P. P., U. S. Eng's, No. 24, 1882. |
| Little Traverse Bay. | 45 24 | 85 04 | 1860.45 | — 2.87 | +2.09 | — 0.78 | W. H. Hearding. | P. P., U. S. Eng's, No. 24, 1882. |
| Point opposite Little Traverse Bay. | 45 25 | 84 59 | 1860.46 | — 2.42 | +2.09 | — 0.33 | W. H. Hearding. | P. P., U. S. Eng's, No. 24, 1882. |
| Cedar River. | 45 25 | 87 21 | 1863.5 | — 3.95 | +2.04 | — 1.91 | H. C. Penny. | P. P., U. S. Eng's, No. 24, 1882. |
| Point northward of Little Traverse Bay. | 45 26 | 85 03 | 1860.44 | — 2.98 | +2.09 | — 0.89 | W. H. Hearding. | P. P., U. S. Eng's, No. 24, 1882. |
| Seven-Mile Point. | 45 28 | 85 05 | 1860.5 | — 2.68 | +2.09 | — 0.59 | W. H. Hearding. | P. P., U. S. Eng's, No. 24, 1882. |
| East of Hammond's Bay. | 45 29 | 83 55 | 1859.6 | + 1.18 | +1.88 | + 3.06 | H. C. Penny. | P. P., U. S. Eng's, No. 24, 1882. |
| Hammond's Bay. | 45 31 | 84 07 | 1859.6 | — 2.33 | +1.88 | — 0.45 | H. C. Penny. | P. P., U. S. Eng's, No. 24, 1882. |
| Middle Village. | 45 33 | 85 08 | 1860.5 | — 2.57 | +2.09 | — 0.48 | W. H. Hearding. | P. P., U. S. Eng's, No. 24, 1882. |
| Beaver Island, south point. | 45 34 | 85 29 | 1855.5 | — 4.05 | +2.35 | — 1.70 | (Chart). | U. S. Lake Survey. |
| North of Little Traverse Bay. | 45 35 | 85 06 | 1853.66 | — 2.63 | +2.42 | — 0.21 | W. F. Raynolds. | P. P., U. S. Eng's, No. 24, 1882. |
| Beaver Island, Station 34, south side. | 45 35 | 85 34 | 1855.5 | — 4.05 | +2.35 | — 1.70 | W. H. Hearding. | P. P., U. S. Eng's, No. 24, 1882. |
| Beaver Island, Station 40, south side. | 45 35 | 85 35 | 1855.5 | — 3.78 | +2.35 | — 1.43 | W. H. Hearding. | P. P., U. S. Eng's, No. 24, 1882. |
| Bark River. | 45 35 | 87 14 | 1863.5 | — 3.62 | +2.04 | — 1.58 | H. C. Penny. | P. P., U. S. Eng's, No. 24, 1882. |

*Table of Observed Magnetic Declinations and Values reduced to the Year* 1890—Continued.

MICHIGAN—Continued.

| Name of station. | $\varphi$ | $\lambda$ | $t$ | D | $\Delta$D | $D_{1890.0}$ | Observer. | Reference. |
|---|---|---|---|---|---|---|---|---|
| | ° ′ | ° ′ | | ° | ° | ° | | |
| Beaver Island, Stations 53 and 76, west side. | 45 36 | 85 37 | 1855.5 | — 3.50 | +2.35 | — 1.15 | W. H. Hearding. | P. P., U. S. Eng's, No. 24, 1882. |
| Near Duncan City. | 45 37 | 84 07 | 1851.5 | — 1.88 | +2.23 | + 0.35 | (Chart). | U. S. Lake Survey. |
| East of Cheboygan Light-House. | 45 37 | 84 12 | 1851.5 | — 1.90 | +2.23 | + 0.33 | W. F. Raynolds. | P. P., U. S. Eng's, No. 24, 1882. |
| Beaver Island, Station 60, west side. | 45 38 | 85 37 | 1855.5 | — 3.60 | +2.35 | — 1.25 | W. H. Hearding. | P. P., U. S. Eng's, No. 24, 1882. |
| Beaver Island, Station M, east side. | 45 39 | 85 29 | 1855.5 | — 3.03 | +2.35 | — 0.68 | W. H. Hearding. | P. P., U. S. Eng's, No. 24, 1882. |
| Four miles W. of Isle aux Galet's Light. | 45 40 | 85 10 | 1853.5 | — 2.75 | +2.15 | — 0.60 | (Chart). | U. S. Lake Survey. |
| Point Detour. | 45 40 | 86 37 | 1864.5 | — 3.43 | +1.99 | — 1.44 | W. T. Casgrain. | P. P., U. S. Eng's, No. 24, 1882. |
| Beaver Island, Station 7, east side. | 45 41 | 85 30 | 1855.5 | — 3.37 | +2.35 | — 1.02 | W. H. Hearding. | P. P., U. S. Eng's, No. 24, 1882. |
| Near Escanaba. | 45 41 | 87 05 | 1863.5 | — 1.90 | +2.04 | + 0.14 | (U. S. Lake Sur.). | MS. of W. F. Raynolds. |
| Gull Island. | 45 42 | 85 50 | 1855.5 | — 4.42 | +2.07 | — 2.35 | G. W. Lamson. | P. P., U. S. Eng's, No. 24, 1882. |
| Beaver Island, Station R, west side. | 45 43 | 85 34 | 1855.5 | — 3.15 | +2.07 | — 1.08 | W. H. Hearding. | P. P., U. S. Eng's, No. 24, 1882. |
| West of Chippewa Point. | 45 43 | 86 54 | 1864.5 | — 3.83 | +1.99 | — 1.84 | A. F. Chaffee. | P. P., U. S. Eng's, No. 24, 1882. |
| South Portage Bay. | 45 44 | 86 32 | 1864.5 | — 3.53 | +1.99 | — 1.54 | W. T. Casgrain. | P. P., U. S. Eng's, No. 24, 1882. |
| Little Bay of Noquette, east side. | 45 44 | 86 59 | 1863.80 | — 3.95 | +2.02 | — 1.93 | H. C. Penny. | P. P., U. S. Eng's, No. 24, 1882. |
| Little Bay of Noquette. | 45 44 | 87 04 | 1863.69 | — 1.90 | +2.02 | + 0.12 | H. C. Penny. | P. P., U. S. Eng's, No. 24, 1882. |
| Beaver Island. | 45 45 | 85 30 | 1860.75 | — 2.72 | +1.81 | — 0.91 | W. P. Smith. | P. P., U. S. Eng's, No. 24, 1882. |
| Waugoshane Point. | 45 46 | 85 00 | 1853.5 | — 2.22 | +2.14 | — 0.08 | W. F. Raynolds. | P. P., U. S. Eng's, No. 24, 1882. |
| McGulpin's Point. | 45 47 | 84 47 | 1852.75 | — 2.32 | +2.18 | — 0.14 | W. F. Raynolds. | P. P., U. S. Eng's, No. 24, 1882. |
| Garden Island. | 45 47 | 85 29 | 1854.5 | — 2.72 | +2.11 | — 0.61 | W. F. Raynolds. | P. P., U. S. Eng's, No. 24, 1882. |
| Saint Vital Point. | 45 48 | 86 47 | 1864.5 | — 3.08 | +1.99 | — 1.09 | A. F. Chaffee. | P. P., U. S. Eng's, No. 24, 1882. |
| Bois Blanc Island, north side. | 45 49 | 84 29 | 1849.5 | — 1.52 | +2.29 | + 0.77 | J. N. Macomb. | P. P., U. S. Eng's, No. 24, 1882. |
| Bois Blanc Island, west side. | 45 49 | 84 35 | 1849.6 | — 1.98 | +2.29 | + 0.31 | R. W. Burgess. | P. P., U. S. Eng's, No. 24, 1882. |

*Table of Observed Magnetic Declinations and Values reduced to the Year* 1890—Continued.

MICHIGAN—Continued.

| Name of station. | $\varphi$ | $\lambda$ | $t$ | D | $\Delta$D | $D_{1890.0}$ | Observer. | Reference. |
|---|---|---|---|---|---|---|---|---|
| | ° ′ | ° ′ | | ° | ° | ° | | |
| Hat Island. | 45 49 | 85 18 | 1853.5 | — 3.20 | +2.14 | — 1.06 | W. F. Raynolds. | P. P., U. S. Eng's, No. 24, 1882. |
| Whiskey Island. | 45 49 | 85 36 | 1854.5 | — 3.82 | +2.11 | — 1.71 | W. F. Raynolds. | P. P., U. S. Eng's, No. 24, 1882. |
| Twenty-five miles E. of Fort Mackinac. | 45 50 | 84 00 | 1851.5 | — 1.88 | +2.23 | + 0.35 | (Chart). | U. S. Lake Survey. |
| Round Island. | 45 50 | 84 37 | 1853.5 | — 2.08 | +2.15 | + 0.07 | W. F. Raynolds. | P. P., U. S. Eng's, No. 24, 1882. |
| Mackinac, at the fort. | 45 51 | 84 36 | 1888.63 | + 1.14 | +0.10 | + 1.24 | C. S. Woodard. | MS. in C. and G. S. Office. |
| Pointe St. Ignace. | 45 51 | 84 42 | 1849.56 | — 2.48 | +2.29 | — 0.19 | E. P. Scammon. | P. P., U. S. Eng's, No. 24, 1882. |
| Rabbit's Back Point. | 45 52 | 84 43 | 1849.6 | — 2.15 | +2.29 | + 0.14 | E. P. Scammon. | P. P., U. S. Eng's, No. 24, 1882. |
| Drummond Island. | 45 55 | 83 30 | 1859.50 | + 0.85 | +1.88 | + 2.73 | W. H. Hearding. | P. P., U. S. Eng's, No. 24, 1882. |
| Drummond Island, near Harbor Island. | 45 55 | 83 34 | 1859.53 | + 0.83 | +1.88 | + 2.71 | W. H. Hearding. | P. P., U. S. Eng's, No. 24, 1882. |
| Seul Choix Point. | 45 55 | 85 50 | 1855.7 | — 3.93 | +2.06 | — 1.87 | W. H. Hearding. | P. P., U. S. Eng's, No. 24, 1882. |
| Drummond Island, south side. | 45 56 | 83 38 | 1859.58 | + 0.43 | +1.88 | + 2.31 | W. H. Hearding. | P. P., U. S. Eng's, No. 24, 1882. |
| Drummond Island, SW. point. | 45 56 | 83 42 | 1859.60 | — 0.22 | +1.88 | + 1.66 | W. H. Hearding. | P. P., U. S. Eng's, No. 24, 1882. |
| Drummond Island, east side. | 45 57 | 83 29 | 1859.48 | + 0.43 | +1.88 | + 2.31 | W. H. Hearding. | P. P., U. S. Eng's, No. 24, 1882. |
| Scott's Point. | 45 57 | 85 41 | 1855.5 | — 3.10 | +2.07 | — 1.03 | W. H. Hearding. | P. P., U. S. Eng's, No. 24, 1882. |
| Monistique River. | 45 57 | 86 10 | 1864.5 | — 3.10 | +1.99 | — 1.11 | (U. S. Lake Sur.). | MS. of W. F. Raynolds. |
| Pointe au Barque. | 45 57 | 86 20 | 1864.5 | — 3.47 | +1.99 | — 1.48 | W. T. Casgrain. | P. P., U. S. Eng's, No. 24, 1882. |
| Point Brulee, Stations D and 18. | 45 58 | 84 32 | 1849.67 | — 1.40 | +2.29 | + 0.89 | E. P. Scammon. | P. P., U. S. Eng's, No. 24, 1882. |
| Point Brulee, Station 17. | 45 58 | 84 33 | 1849.71 | — 1.17 | +2.29 | + 1.12 | E. P. Scammon. | P. P., U. S. Eng's, No. 24, 1882. |
| Isle Saint Martin. | 45 58 | 84 35 | 1849.64 | — 0.53 | +2.29 | + 1.76 | E. P. Scammon. | P. P., U. S. Eng's, No. 24, 1882. |
| Grosse Point. | 45 58 | 84 41 | 1849.60 | — 2.00 | +2.29 | + 0.29 | E. P. Scammon. | P. P., U. S. Eng's, No. 24, 1882. |
| Point Patterson. | 45 58 | 85 39 | 1854.5 | — 2.85 | +2.11 | — 0.74 | G. W. Lamson. | P. P., U. S. Eng's, No. 24, 1882. |

*Table of Observed Magnetic Declinations and Values reduced to the Year* 1890—Continued.

MICHIGAN—Continued.

| Name of station. | φ | λ | t | D | ΔD | $D_{1890.0}$ | Observer. | Reference. |
|---|---|---|---|---|---|---|---|---|
| | ° ′ | ° ′ | | ° | ° | ° | | |
| Search Bay, Station A. Pointe St. Martin, Station 16. | 45 59 | 84 31 | 1849.68 | —0.80 | +2.29 | + 1.49 | E. P. Scammon. | P. P., U. S. Eng's, No. 24, 1882. |
| Pointe St. Martin, Stations 12 and 13. | 45 59 | 84 32 | 1849.56 | —0.96 | +2.29 | + 1.33 | E. P. Scammon. | P. P., U. S. Eng's, No. 24, 1882. |
| Point Brulee, Stations E and C. | 45 59 | 84 34 | 1849.70 | —1.07 | +2.29 | + 1.22 | E. P. Scammon. | P. P., U. S. Eng's, No. 24, 1882. |
| Search Bay, Station B. | 46 00 | 84 30 | 1849.68 | —0.67 | +2.29 | + 1.62 | E. P. Scammon. | P. P., U. S. Eng's, No. 24, 1882. |
| Point Brulee, Stations F and G. | 46 00 | 84 32 | 1849.71 | — 1.32 | +2.29 | + 0.97 | E. P. Scammon. | P. P., U. S. Eng's, No. 24, 1882. |
| East of Boiling Spring Point. | 46 02 | 84 35 | 1849.58 | — 1.53 | +2.29 | + 0.76 | E. P. Scammon. | P. P., U. S. Eng's, No. 24, 1882. |
| Sault Island, north of Drummond Isd. | 46 02 | 83 45 | 1854.5 | + 1.38 | +2.11 | + 3.49 | E. P. Scammon. | P. P., U. S. Eng's, No. 24, 1882. |
| Boiling Spring Point. | 46 02 | 84 38 | 1849.59 | — 1.98 | +2.29 | + 0.31 | E. P. Scammon. | P. P., U. S. Eng's, No. 24, 1882. |
| Pointe Epoufette. | 46 04 | 85 07 | 1854.7 | — 2.50 | +2.10 | — 0.40 | (Chart). | U. S. Lake Survey. |
| Twin Island, Mud Lake. | 46 12 | 84 06 | 1854.5 | + 2.62 | +2.11 | + 4.73 | E. P. Scammon. | P. P., U. S. Eng's, No. 24, 1882. |
| West Neebish Rapids | 46 18 | 84 12 | 1854.5 | + 2.05 | +2.11 | + 4.16 | E. P. Scammon. | P. P., U. S. Eng's, No. 24, 1882. |
| East Neebish Rapids. | 46 20 | 84 10 | 1853.5 | — 0.25(?) | ------ | ------- | (Chart). | U. S. Lake Survey. |
| Grand Island, south end. | 46 28 | 86 40 | 1859.7 | — 4.22 | +1.88 | — 2.34 | G. W. Lamson. | P. P., U. S. Eng's, No. 24, 1882. |
| Laughing Fish River. | 46 28 | 86 55 | 1867.5 | — 5.00 | +1.45 | — 3.55 | H. Gillman. | P. P., U. S. Eng's, No. 24, 1882. |
| Sugar Island Rapids. | 46 29 | 84 18 | 1854.5 | — 0.28 | +2.11 | + 1.83 | E. P. Scammon. | P. P., U. S. Eng's, No. 24, 1882. |
| Iroquois Point. | 46 29 | 84 37 | 1867.73 | — 0.65 | +1.44 | + 0.79 | O. B. Wheeler. | P. P., U. S. Eng's, No. 24, 1882. |
| Sugar Island, NE. side. | 46 30 | 84 08 | 1853.5 | — 0.67 | +2.15 | + 1.48 | E. P. Scammon. | P. P., U. S. Eng's, No. 24, 1882. |
| Chocolate River. | 46 30 | 87 20 | 1867.6 | — 5.42 | +1.44 | — 3.98 | H. Gillman. | P. P., U. S. Eng's, No. 24, 1882. |
| Shot Point. | 46 31 | 87 10 | 1867.6 | — 5.32 | +1.44 | — 3.88 | H. Gillman. | P. P., U. S. Eng's, No. 24, 1882. |
| Small River. | 46 32 | 87 10 | 1824.5 | — 7.35 | ------ | ------ | H.W. Bayfield. | Phil. Trans. Roy. Soc., 1872. |
| Marquette. | 46 33 | 87 24 | 1873.57 | — 4.51 | +1.09 | — 3.42 | A. N. Lee. | U. S. Lake Sur., 1873. |
| Grand Island, near light-house. | 46 34 | 86 40 | 1867.66 | — 3.10 | +1.44 | — 1.66 | O. B. Wheeler. | P. P., U. S. Eng's, No. 24, 1882. |

*Table of Observed Magnetic Declinations and Values reduced to the Year* 1890—Continued.

MICHIGAN—Continued.

| Name of station. | φ | λ | t | D | ΔD | $D_{1890.0}$ | Observer. | Reference. |
|---|---|---|---|---|---|---|---|---|
| | ° ′ | ° ′ | | ° | ° | ° | | |
| Grand Island, north end. | 46 34 | 86 41 | 1859.5 | — 3.67 | +1.88 | — 1.79 | G. W. Lamson. | P. P., U. S. Eng's, No. 24, 1882. |
| Little Girl's Point. | 46 37 | 90 17 | 1868.6 | — 8.00 | +1.39 | — 6.61 | H. Gillman. | P. P., U. S. Eng's, No. 24, 1882. |
| Granite Point. | 46 39 | 87 27 | 1866.5 | — 3.07 | +1.50 | — 1.57 | A. Molitor. | P. P., U. S. Eng's, No. 24, 1882. |
| Black River. | 46 40 | 90 02 | 1868.50 | — 7.83 | +1.39 | — 6.44 | H. Gillman. | P. P., U. S. Eng's, No. 24, 1882. |
| Grand Marais. | 46 41 | 85 57 | 1867.7 | — 2.03 | +1.43 | — 0.60 | (Chart). | U. S. Lake Survey, 1872. |
| Pine Cliff. | 46 42 | 85 53 | 1867.69 | — 2.02 | +1.44 | — 0.58 | O. B. Wheeler. | P. P., U. S. Eng's, No. 24, 1882. |
| Whitefish Point. | 46 46 | 84 57 | 1867.7 | — 0.92 | +1.44 | + 0.52 | A. Molitor. | P. P., U. S. Eng's, No. 24, 1882. |
| Lone Rock, near Porcupine Mt. | 46 48 | 89 49 | 1868.5 | —11.50* | ------ | ------- | J. E. Griffith. | P. P., U. S. Eng's, No. 24, 1882. |
| Point on shore. | 46 48 | 90 01 | 1824.5 | —10.25 | ------ | ------- | H. W. Bayfield. | Phil. Trans. Roy. Soc., 1872. |
| Little Iron River. | 46 49 | 87 35 | 1866.6 | — 4.35 | +1.50 | — 2.85 | A. Molitor. | P. P., U. S. Eng's, No. 24, 1882. |
| Iron River. | 46 50 | 89 34 | 1868.4 | — 6.80 | +1.40 | — 5.40 | J. E. Griffith. | P. P., U. S. Eng's, No. 24, 1882. |
| Huron River. | 46 55 | 88 07 | 1824.5 | — 7.93 | ------ | ------- | H. W. Bayfield. | Phil. Trans. Roy. Soc., 1872. |
| Portage Entry. | 46 59 | 88 25 | 1863.5 | — 4.62 | +1.66 | — 2.96 | J. U. Mueller. | P. P., U. S. Eng's, No. 24, 1882. |
| Misery River. | 47 00 | 88 59 | 1865.65 | — 7.72 | +1.55 | — 6.17 | H. Gillman. | P. P., U. S. Eng's, No. 24, 1882. |
| Torch Bay. | 47 05 | 88 26 | 1863.5 | — 3.68 | +1.67 | — 2.01 | J. U. Mueller. | P. P., U. S. Eng's, No. 24, 1882. |
| Point above Elm River. | 47 05 | 88 55 | 1865.6 | — 6.68 | +1.55 | — 5.13 | H. Gillman. | P. P., U. S. Eng's, No. 24, 1882. |
| Dollar Bay. | 47 07 | 88 29 | 1863.5 | — 4.05 | +1.67 | — 2.38 | J. U. Mueller. | P. P., U. S. Eng's, No. 24, 1882. |
| Salmon Trout River. | 47 09 | 88 45 | 1865.57 | — 7.68 | +1.55 | — 6.13 | H. Gillman. | P. P., U. S. Eng's, No. 24, 1882. |
| Two miles north of Traverse Point. | 47 11 | 88 15 | 1865.61 | — 3.92 | +1.55 | — 2.37 | A. Molitor. | P. P., U. S. Eng's, No. 24, 1882. |
| Torch Lake. | 47 12 | 88 24 | 1864.56 | — 5.18 | +1.61 | — 3.57 | H. Gillman. | P. P., U. S. Eng's, No. 24, 1882. |
| Portage Lake, north end. | 47 13 | 88 36 | 1863.5 | — 4.55 | +1.67 | — 2.88 | J. U. Mueller. | P. P., U. S. Eng's, No. 24, 1882. |
| Isabella Point. | 47 21 | 87 56 | 1865.42 | — 4.88 | +1.57 | — 3.31 | A. Molitor. | P. P., U. S. Eng's, No. 24, 1882. |

*Supposed local deflection.

*Table of Observed Magnetic Declinations and Values reduced to the Year* 1890—Continued.

MICHIGAN—Continued.

| Name of station. | φ | λ | t | D | ΔD | $D_{1890.0}$ | Observer. | Reference. |
|---|---|---|---|---|---|---|---|---|
| | ° ′ | ° ′ | | ° | ° | ° | | |
| Gratiot River. | 47 21 | 88 27 | 1865.5 | — 7.62 | +1.57 | — 6.05 | H. Gillman. | P. P., U. S. Eng's, No. 24, 1882. |
| West Eagle River. | 47 23 | 88 21 | 1855.5 | — 6.20 | +2.07 | — 4.13 | W. F. Raynolds. | P. P., U. S. Eng's, No. 24, 1882. |
| Eagle River. | 47 25 | 88 17 | 1855.5 | — 6.77 | +2.07 | — 4.70 | W. F. Raynolds. | P. P., U. S. Eng's, No. 24, 1882. |
| Fort Wilkins, Copper Harbor. | 47 28 | 87 49 | 1864.5 | — 4.73 | +1.61 | — 3.12 | ---------- | MS. of W. F. Raynolds. |
| Copper Harbor. | 47 28 | 87 51 | 1873.58 | — 4.06 | +1.09 | — 2.97 | A. N. Lee. | U. S. Lake Sur., 1873. |
| Agate Harbor. | 47 28 | 88 03 | 1855.5 | — 5.33 | +2.07 | — 3.26 | W. F. Raynolds. | P. P., U. S. Eng's, No. 24, 1882. |
| Eagle Harbor. | 47 28 | 88 08 | 1855.5 | — 2.67(?) | ------ | ------- | J. U. Mueller. | P. P., U. S. Eng's, No. 24, 1882. |
| South shore of Isle Royale. | 47 50 | 89 06 | 1868.5 | — 4.93 | +1.40 | — 3.53 | B. D. Greene. | P. P., U. S. Eng's, No. 24, 1882. |
| Keweenaw Bay. | 47 52 | 88 28 | 1864.69 | — 4.75 | +1.60 | — 3.15 | H. Gillman. | P. P., U. S. Eng's, No. 24, 1882. |
| Washington Harbor, Isle Royale. | 47 53 | 89 13 | 1868.5 | — 6.60 | +1.40 | — 5.20 | A. C. Lamson. | P. P., U. S. Eng's, No. 24, 1882. |
| Siskawit Point, Isle Royale. | 47 54 | 88 54 | 1868.5 | — 4.50 | +1.40 | — 3.10 | B. D. Greene. | P. P., U. S. Eng's, No. 24, 1882. |
| Wright's Island, Isle Royale. | 47 58 | 88 49 | 1868.5 | — 4.27 | +1.40 | — 2.87 | B. D. Greene. | P. P., U. S. Eng's, No. 24, 1882. |
| Todd's Harbor, Isle Royale. | 48 05 | 88 45 | 1868.5 | — 6.50 | +1.40 | — 5.10 | J. C. Mallery. | P. P., U. S. Eng's, No. 24, 1882. |
| Fish Island, Isle Royale. | 48 09 | 88 37 | 1867.5 | — 5.13 | +1.45 | — 3.68 | A. C. Lamson. | P. P., U. S. Eng's, No. 24, 1882. |
| Scoville Point, Isle Royale. | 48 10 | 88 26 | 1867.5 | — 6.47 | +1.45 | — 5.02 | B. D. Greene. | P. P., U. S. Eng's, No. 24, 1882. |

MINNESOTA.

Group 1.

| | | | | | | | | |
|---|---|---|---|---|---|---|---|---|
| Heron Lake. | 43 48 | 95 24 | 1880.76 | —10.23 | +0.62 | — 9.61 | J. B. Baylor. | C. and G. S. Rep., 1881, App. 9. |
| Fort Snelling Reservation. | 44 54 | 93 11 | 1880.74 | —10.23 | +0.62 | — 9.61 | J. B. Baylor. | C. and G. S. Rep., 1881, App. 9. |
| Minneapolis. | 44 59 | 93 14 | 1877.75 | —10.22 | +0.82 | — 9.40 | A. Braid. | C. and G. S. Rep., 1881, App. 9. |
| Brainerd. | 46 21 | 94 15 | 1880.66 | — 9.59 | +0.62 | — 8.97 | J. B. Baylor. | C. and G. S. Rep., 1881, App. 9. |
| Glyndon. | 46 52 | 96 40 | 1880.68 | —11.44 | +0.62 | —10.82 | J. B. Baylor. | C. and G. S. Rep., 1881, App. 9. |

*Table of Observed Magnetic Declinations and Values reduced to the Year* 1890—**Continued.**

MINNESOTA—Continued.

Group 2.

| Name of station. | φ | λ | t | D | ΔD | $D_{1890.0}$ | Observer. | Reference. |
|---|---|---|---|---|---|---|---|---|
| | ° ′ | ° ′ | | ° | ° | ° | | |
| Wabasha. | 44 18 | 92 07 | 1876.61 | — 8.07 | +0.89 | — 7.18 | T. N. Bailey. | Rep. Ch. of Eng's, 1877. |
| Henderson. | 44 32 | 93 56 | 1855.5 | —11.50 | +1.72 | — 9.78 | J. S. Allanson. | MS. in C. and G. S. Office. |
| Red Wing. | 44 34 | 92 32 | 1878.77 | — 7.83 | +0.75 | — 7.08 | C. F. Powell. | U. S. Lake Sur. Rep., 1879. |
| Mouth of St. Peter River. | 44 53 | 93 08 | 1823.5 | —10.48 | ----- | ------- | S. H. Long. | Sill. Jour., Vol. 34, 1838. |
| Saint Paul. | 44 57 | 93 05 | 1873.63 | —10.93 | +1.09 | — 9.84 | A. N. Lee. | U. S. Lake Sur., 1873. |
| Princeton. | 45 42 | 93 20 | 1858.61 | —10.22 | +1.57 | — 8.65 | O. E. Garrison. | MS. in C. and G. S. Office. |
| Fond du Lac. | 46 39 | 92 15 | 1861.66 | — 9.70 | +1.89 | — 7.81 | W. H. Hearding. | P. P., U. S. Eng's, No. 24, 1882. |
| South of Spirit Lake and island in Sp. Lake. | 46 41 | 92 11 | 1861.53 | — 9.77 | +1.90 | — 7.87 | W. H. Hearding. | P. P., U. S. Eng's, No. 24, 1882. |
| Point on shore. | 46 42 | 91 50 | 1824.5 | —12.33 | ------ | ------- | H. W. Bayfield. | Phil. Trans. Roy. Soc., 1872. |
| Aminicon River, 5½ miles east of. | 46 43 | 91 45 | 1861.6 | —10.28 | +1.89 | — 8.39 | H. C. Penny. | P. P., U. S. Eng's, No. 24, 1882. |
| Near South Base, Minnesota Point. | 46 43 | 92 02 | 1861.53 | —10.20 | +1.90 | — 8.30 | W. H. Hearding. | P. P., U. S. Eng's, No. 24, 1882. |
| Saint Louis Bay. | 46 43 | 92 10 | 1861.61 | —11.73 | +1.89 | — 9.84 | W. H. Hearding. | P. P., U. S. Eng's, No. 24, 1882. |
| South Base, Minnesota Point. | 46 44 | 92 03 | 1870.75 | — 9.77 | +1.28 | — 8.49 | E. S. Wheeler. | P. P., U. S. Eng's, No. 24, 1882. |
| Near North Base, Minnesota Point. | 46 45 | 92 04 | 1861.56 | —11.12 | +1.90 | — 9.22 | W. H. Hearding. | P. P., U. S. Eng's, No. 24, 1882. |
| Rice's Point. | 46 45 | 92 05 | 1861.55 | — 9.58 | +1.90 | — 7.68 | W. H. Hearding. | P. P., U. S. Eng's, No. 24, 1882. |
| Duluth (S. V. S.). | 46 46 | 92 04 | 1873.61 | —11.87 | ------ | — 9.87 | A. N. Lee. | U. S. Lake Sur., 1873. |
| Minnesota Point. | 46 46 | 92 05 | 1859.55 | — 9.42 | +2.03 | —7.39 | W. P. Smith. | U. S. Lake Sur., 1859. |
| Point on shore. | 46 48 | 91 30 | 1824.5 | —12.45 | ------ | ------- | H. W. Bayfield. | Phil. Trans. Roy. Soc., 1872. |
| Lester River. | 46 50 | 92 00 | 1861.5 | — 7.65 | +1.90 | — 5.75 | H. C. Penny. | P. P., U. S. Eng's, No. 24, 1882. |
| Knife River. | 46 57 | 91 46 | 1861.6 | —12.75 | +1.89 | —10.86 | H. C. Penny. | P. P., U. S. Eng's, No. 24, 1882. |
| Point on shore. | 47 33 | 90 50 | 1824.5 | —10.50 | ------ | ------- | H. W. Bayfield. | Phil. Trans. Roy. Soc., 1872. |
| Terrace Point. | 47 43 | 90 26 | 1868.6 | — 8.20 | +1.43 | — 6.77 | H. Gillman. | P. P., U. S. Eng's, No. 24, 1882. |

***Table of Observed Magnetic Declinations and Values reduced to the Year* 1890—Continued.**

MINNESOTA—Continued.

| Name of station. | φ | λ | t | D | ΔD | $D_{1890.0}$ | Observer. | Reference. |
|---|---|---|---|---|---|---|---|---|
| | ° ′ | ° ′ | | ° | ° | ° | | |
| Brulé River. | 47 48 | 90 03 | 1868.6 | — 9.50 | +1.43 | — 8.07 | W. E. Rogers. | P. P., U. S. Eng's, No. 24, 1882. |
| Grand Portage Isd. | 47 57 | 89 39 | 1868.6 | — 5.83 | +1.43 | — 4.40 | W. E. Rogers. | P. P., U. S. Eng's, No. 24, 1882. |
| North shore, Lake Superior. | 47 58 | 90 00 | 1823.5 | — 6.35 | ------ | ------- | S. H. Long. | (Exp'n to St. Peter's), Sill. Jour., Vol. 34, 1838. |
| Pigeon Point. | 48 00 | 89 30 | 1868.5 | — 9.50 | +1.43 | — 8.07 | W. E. Rogers. | P. P., U. S. Eng's, No. 24, 1882. |
| Island in Rainy Lake. | 48 35 | 92 30 | 1823.5 | — 8.25 | ------ | ------- | S. H. Long. | Sill. Jour., Vol. 34, 1838. |
| Lake of the Woods. | 49 00 | 94 00 | 1823.5 | —11.02 | ------ | ------- | S. H. Long. | Sill. Jour., Vol. 34, 1838. |
| Northwest Boundary Station. | 49 00 | 94 45 | 1874.08 | —10.92 | +0.80 | —10.12 | W. J. Twining. | NW. Bound. Sur., 1872–'74. |
| Northwest Boundary Station. | 49 00 | 94 55 | 1874.07 | —11.08 | +0.80 | —10.28 | W. J. Twining. | NW. Bound. Sur., 1872–'74. |
| Northwest Boundary Station. | 49 00 | 95 00 | 1874.06 | —11.20 | +0.80 | —10.40 | W. J. Twining. | NW. Bound. Sur., 1872–'74. |
| Lake of the Woods, Buffalo Point. | 49 00 | 95 15 | 1874.05 | —11.50 | +0.80 | —10.70 | W. J. Twining. | NW. Bound. Sur., 1872–'74. |
| Northwest Boundary Station. | 49 00 | 96 10 | 1873.98 | —12.00 | +0.80 | —11.20 | W. J. Twining. | NW. Bound. Sur., 1872–'74. |
| Northwest Boundary Station. | 49 00 | 96 25 | 1873.96 | —12.42 | +0.80 | —11.62 | W. J. Twining. | NW. Bound. Sur., 1872–'74. |
| Northwest Boundary Station. | 49 00 | 96 30 | 1873.96 | —13.17 | +0.80 | —12.37 | W. J. Twining. | NW. Bound. Sur., 1872–'74. |

MISSISSIPPI.

Group 1.

| | | | | | | | | |
|---|---|---|---|---|---|---|---|---|
| East Pascagoula. | 30 21 | 88 33 | 1855.07 | — 7.15 | +1.76 | — 5.39 | J. E. Hilgard. | C. and G. S. Rep., 1881, App. 9. |
| Mississippi City. | 30 23 | 89 02 | 1855.24 | — 7.36 | +1.80 | — 5.56 | J. S. Harris (J. E. Hilgard). | C. and G. S. Rep., 1881, App. 9. |

Group 2.

| | | | | | | | | |
|---|---|---|---|---|---|---|---|---|
| Ship Island. | 30 13 | 88 58 | 1841.5 | — 7.58 | +2.03 | — 5.55 | L. M. Powell. | C. S. Rep., 1845. |
| Cat Island. | 30 15 | 89 06 | 1847.5 | — 7.20 | +1.96 | — 5.24 | —— Barnett. | Phil. Trans. Roy. Soc., 1875. |
| Pascagoula. | 30 21 | 88 33 | 1875.41 | — 6.32 | +0.90 | — 5.42 | J. M. Poole. | Nat. Acad. Sc. |
| Natchez. | 31 34 | 91 24 | 1872.30 | — 7.25 | +1.14 | — 6.11 | T. C. Hilgard. | Nat. Acad. Sc. |

*Table of Observed Magnetic Declinations and Values reduced to the Year* **1890—Continued.**

MISSISSIPPI—Continued.

| Name of station. | φ | λ | t | D | ΔD | $D_{1890.0}$ | Observer. | Reference. |
|---|---|---|---|---|---|---|---|---|
| | ° ′ | ° ′ | | ° | ° | ° | | |
| Jackson. | 32 19 | 90 12 | 1872.32 | — 7.34 | +1.08 | — 6.26 | T. C. Hilgard. | Nat. Acad. Sc. |
| Meridian. | 32 20 | 88 44 | 1875.43 | — 6.43 | +0.87 | — 5.56 | J. M. Poole. | Nat. Acad. Sc. |
| King's Point, opposite Vicksburg. | 32 20 | 90 56 | 1877(?) | — 7.33 | +0.86 | — 6.47 | (Chart). | Rep. Ch. of Eng's, 1878. |
| Vicksburg. | 32 21 | 90 53 | 1875.42 | — 7.32 | +0.94 | — 6.38 | J. M. Poole. | Nat. Acad. Sc. |
| Scooba, Kemper Co. | 32 50 | 88 30 | 1833.5 | — 6.92 | +2.10 | — 4.82 | ---------- | MS. in C. and G. S. Office. |
| Macon. | 33 08* | 88 38* | 1833.5 | — 7.50 | +2.10 | — 5.40 | G. W. Campbell. | MS. in C. and G. S. Office. |
| West Point. | 33 33 | 88 38 | 1875.43 | — 6.42 | +0.87 | — 5.55 | J. M. Poole. | Nat. Acad. Sc. |
| Grenada. | 33 47 | 89 50 | 1872.18 | — 6.42 | +1.01 | — 5.41 | T. C. Hilgard. | Nat. Acad. Sc. |
| Corinth. | 34 56 | 88 35 | 1875.40 | — 6.36 | +0.76 | — 5.60 | T. C. Hilgard. | Nat. Acad. Sc. |
| Triangulation Station Nelms. | 34 58 | 90 15 | 1879.15 | — 6.37 | +0.57 | — 5.80 | J. H. Darling. | P. P., U. S. Eng's, No. 24, 1882. |

* Supplied.

MISSOURI.

Group 1.

| | | | | | | | | |
|---|---|---|---|---|---|---|---|---|
| Cape Girardeau. | 37 18 | 89 33 | 1865.21 | — 6.58 | +1.70 | — 4.88 | A. T. Mosman. | C. and G. S. Rep., 1881, App. 9. |
| Wittemberg. | 37 39 | 89 33 | 1865.26 | — 6.78 | +1.70 | — 5.08 | A. T. Mosman. | C. and G. S. Rep., 1881, App. 9. |
| Saint Louis, near Tower Grove Park (S. V. S.). | 38 37 | 90 15 | 1886.76 | — 6.18 | ------ | — 5.65 | C. H. Sinclair | MS. in C. and G. S. Office. |

Group 2.

| | | | | | | | | |
|---|---|---|---|---|---|---|---|---|
| Gatewood. | 36 32 | 91 03 | 1880.53 | — 7.20 | +0.70 | — 6.50 | F. E. Nipher. | Trans. St. Louis Acad. Sc. |
| Doniphan. | 36 38 | 90 47 | 1880.53 | — 7.08 | +0.70 | — 6.38 | F. E. Nipher. | Trans. St. Louis Acad. Sc. |
| Public Survey Station. | 36 40 | 90 02 | 1825.5 | — 8.00 | +2.80 | — 5.20 | (Pub. Sur.). | Sill. Jour., Vol. 39, 1840. |
| Poplar Bluffs. | 36 44 | 90 22 | 1880.52 | — 6.75 | +0.70 | — 6.05 | F. E. Nipher. | Trans. St. Louis Acad. Sc. |
| Public Survey Station. | 36 50 | 90 02 | 1823.5 | — 7.50 | +2.80 | — 4.70 | (Pub. Sur.). | Sill. Jour., Vol. 39, 1840. |
| Charleston. | 36 56 | 89 19 | 1880.52 | — 5.72 | +0.70 | — 5.02 | F. E. Nipher. | Trans. St. Louis Acad. Sc. |
| Howell County | 36 56 | 91 55 | 1880.59 | — 7.52 | +0.60 | — 6.92 | F. E. Nipher. | Trans. St. Louis Acad. Sc. |

*Table of Observed Magnetic Declinations and Values reduced to the Year* 1890—Continued.

MISSOURI—Continued.

| Name of station. | φ | λ | t | D | ΔD | $D_{1890.0}$ | Observer. | Reference. |
|---|---|---|---|---|---|---|---|---|
| | ° ′ | ° ′ | | ° | ° | ° | | |
| Public Survey Station. | 37 00 | 90 02 | 1823.5 | — 8.00 | +2.80 | — 5.20 | (Pub. Sur.). | Sill. Jour., Vol. 39, 1840. |
| Public Survey Station. | 37 00 | 90 12 | 1823.5 | — 8.00 | +2.80 | — 5.20 | (Pub. Sur.). | Sill. Jour., Vol. 39, 1840. |
| Piedmont. | 37 08 | 90 41 | 1880.54 | — 7.38 | +0.70 | — 6.68 | F. E. Nipher. | Trans. St. Louis Acad. Sc. |
| Springfield. | 37 16 | 93 15 | 1879.66 | — 8.60 | +0.65 | — 7.95 | F. E. Nipher. | Trans. St. Louis Acad. Sc. |
| Houston. | 37 19 | 91 55 | 1880.58 | — 7.58 | +0.60 | — 6.98 | F. E. Nipher. | Trans. St. Louis Acad. Sc. |
| Lutesville. | 37 20 | 89 59 | 1880.52 | — 6.23 | +0.70 | — 5.53 | F. E. Nipher. | Trans. St. Louis Acad. Sc. |
| Public Survey Station. | 37 30 | 90 02 | 1827.5 | — 7.50 | +3.22 | — 4.28 | (Pub. Sur.). | Sill. Jour., Vol. 39, 1840. |
| Bolivar. | 37 35 | 93 24 | 1881.59 | — 8.24 | +0.53 | — 7.71 | F. E. Nipher. | Trans. St. Louis Acad. Sc. |
| Buffalo and farm of F. Voris. | 37 36 | 93 08 | 1881.58 | — 8.13* | +0.53 | — 7.60 | F. E. Nipher. | Trans. St. Louis Acad. Sc. |
| Pilot Knob, base. | 37 37 | 90 37 | 1880.55 | — 11.14† | ------ | ------ | F. E. Nipher. | Trans. St. Louis Acad. Sc. |
| Pilot Knob, top. | 37 37 | 90 37 | 1880.55 | — 3.76† | ------ | ------ | F. E. Nipher. | Trans. St. Louis Acad. Sc. |
| Salem. | 37 39 | 91 31 | 1880.58 | — 6.94 | +0.60 | — 6.34 | F. E. Nipher. | Trans. St. Louis Acad. Sc. |
| Lebanon, old and new station. | 37 40 | 92 42 | 1880.62 | — 7.77* | +0.60 | — 7.17 | F. E. Nipher. | Trans. St. Louis Acad. Sc. |
| Arcadia. | 37 46 | 90 41 | 1880.54 | — 6.81 | +0.68 | — 6.13 | F. E. Nipher. | Trans. St. Louis Acad. Sc. |
| Decarturville. | 37 54 | 92 43 | 1881.58 | — 8.94 | +0.61 | — 8.33 | F. E. Nipher. | Trans. St. Louis Acad. Sc. |
| Wheatland. | 37 56 | 93 24 | 1881.60 | — 8.66 | +0.61 | — 8.05 | F. E. Nipher. | Trans. St. Louis Acad. Sc. |
| Rolla. | 37 58 | 91 45 | 1880.5 | — 6.88 | +0.68 | — 6.20 | —— Emerson. | Trans. St. Louis Acad. Sc. |
| Shell City. | 38 03 | 94 05 | 1879.65 | — 9.04 | +0.65 | — 8.39 | F. E. Nipher. | Trans. St. Louis Acad. Sc. |
| Cuba. | 38 04 | 91 21 | 1880.57 | — 7.41 | +0.68 | — 6.73 | F. E. Nipher. | Trans. St. Louis Acad. Sc. |
| Linn Creek. | 38 04 | 92 47 | 1881.57 | — 9.00 | +0.61 | — 8.39 | F. E. Nipher. | Trans. St. Louis Acad. Sc. |
| De Soto. | 38 07 | 90 35 | 1880.55 | — 7.78 | +0.68 | — 7.10 | F. E. Nipher. | Trans. St. Louis Acad. Sc. |

* Mean of two determinations. † Local deflection.

*Table of Observed Magnetic Declinations and Values reduced to the Year* **1890—Continued.**

MISSOURI—Continued.

| Name of station. | $\varphi$ | $\lambda$ | $t$ | D | $\Delta$D | $D_{1890\cdot0}$ | Observer. | Reference. |
|---|---|---|---|---|---|---|---|---|
| | ° ′ | ° ′ | | ° | ° | ° | | |
| Lawson's Farm. | 38 11 | 92 11 | 1881.55 | — 6.90 | +0.61 | — 6.29 | F. E. Nipher. | Trans. St. Louis Acad. Sc. |
| Vienna. | 38 12 | 91 54 | 1881.54 | — 7.25 | +0.61 | — 6.64 | F. E. Nipher. | Trans. St. Louis Acad. Sc. |
| Tuscumbia. | 38 12 | 92 30 | 1881.55 | — 8.51 | +0.61 | — 7.90 | F. E. Nipher. | Trans. St. Louis Acad. Sc. |
| Warsaw. | 38 14 | 93 23 | 1881.60 | 8.85 | +0.61 | — 8.24 | F. E. Nipher. | Trans. St. Louis Acad. Sc. |
| Soap Creek. | 38 17 | 92 50 | 1881.57 | — 8.34 | +0.61 | — 7.73 | F. E. Nipher. | Trans. St. Louis Acad. Sc. |
| Canaan and Dry Fork. | 38 18 | 91 34 | 1881.54 | — 7.18* | +0.61 | — 6.57 | F. E. Nipher. | Trans. St. Louis Acad. Sc. |
| Kimmswick. | 38 20 | 90 26 | 1880.56 | — 6.76 | +0.68 | — 6.08 | F. E. Nipher. | Trans. St. Louis Acad. Sc. |
| Lincoln. | 38 23 | 93 21 | 1881.60 | — 9.31 | +0.61 | — 8.70 | F. E. Nipher. | Trans. St. Louis Acad. Sc. |
| Roedersville. | 38 24 | 91 10 | 1881.52 | — 6.93 | +0.61 | — 6.32 | F. E. Nipher. | Trans. St. Louis Acad. Sc. |
| Wulfert's Farm. | 38 24 | 91 16 | 1881.54 | — 7.07 | +0.61 | — 6.46 | F. E. Nipher. | Trans. St. Louis Acad. Sc. |
| Union. | 38 25 | 90 59 | 1881.52 | — 6.60 | +0.61 | — 5.99 | F. E. Nipher. | Trans. St. Louis Acad. Sc. |
| Versailles. | 38 25 | 92 53 | 1881.56 | — 8.33 | +0.61 | — 7.72 | F. E. Nipher. | Trans. St. Louis Acad. Sc. |
| Pacific, formerly Franklin. | 38 28 | 90 44 | 1881.52 | — 6.90 | +0.61 | — 6.29 | F. E. Nipher. | Trans. St. Louis Acad. Sc. |
| F. Kaldeweiher's. | 38 28 | 91 41 | 1882.49 | — 7.74 | +0.54 | — 7.20 | F. E. Nipher. | MS. in C. and G. S. Office. |
| Linn, Osage Co. | 38 28 | 91 50 | 1882.49 | — 7.62 | +0.54 | — 7.08 | F. E. Nipher. | MS. in C. and G. S. Office. |
| Gray's Summit. | 38 29 | 90 49 | 1882.46 | — 6.91 | +0.54 | — 6.37 | F. E. Nipher. | MS. in C. and C. S. Office. |
| Washington, old and new station. | 38 31 | 90 59 | 1881.53 | — 6.32* | +0.61 | — 5.71 | F. E. Nipher. | Trans. St. Louis Acad. Sc. |
| Windsor. | 38 32 | 93 33 | 1881.60 | — 8.72 | +0.61 | — 8.11 | F. E. Nipher. | Trans. St. Louis Acad. Sc. |
| Newport and Goebel's. | 38 35 | 91 06 | 1882.47 | — 7.31* | +0.54 | — 6.77 | F. E. Nipher. | MS. in C. and G. S. Office. |
| Jefferson City. | 38 35 | 92 09 | 1881.65 | — 8.45 | +0.61 | — 7.84 | F. E. Nipher. | Trans. St. Louis Acad. Sc. |
| Ten-Mile House and Kirkwood. | 38 37 | 90 24 | 1881.98 | — 6.60* | +0.58 | — 6.02 | F. E. Nipher. | MS. in C. and G. S. Office. |
| Fred. Bruhn's. | 38 37 | 91 29 | 1882.48 | — 6.87 | +0.54 | — 6.33 | F. E. Nipher. | MS. in C. and C. S. Office. |

* Mean of two determinations.

*Table of Observed Magnetic Declinations and Values reduced to the Year* 1890—Continued.

MISSOURI—Continued.

| Name of station. | φ | λ | t | D | ΔD | $D_{1890.0}$ | Observer. | Reference. |
|---|---|---|---|---|---|---|---|---|
| | ° ′ | ° ′ | | ° | ° | ° | | |
| California Station and Centretown. | 38 38 | 92 34 | 1881.64 | — 7.68 | +0.61 | — 7.07 | F. E. Nipher. | Trans. St. Louis Acad. Sc. |
| Holden. | 38 38 | 94 03 | 1879.63 | — 8.93 | +0.74 | — 8.19 | F. E. Nipher. | Trans. St. Louis Acad. Sc. |
| Near Clayton and St. Charles R. R. | 38 41 | 90 20 | 1882.08 | — 6.10* | +0.57 | — 5.53 | F. E. Nipher. | Trans. St. Louis Acad. Sc. and MS. |
| E. Ruck's. | 38 41 | 91 20 | 1882.48 | 7.85 | +0.54 | — 7.31 | F. E. Nipher. | MS. in C. and G. S. Office. |
| G. Zimmerman's Place. | 38 41 | 93 34 | 1881.61 | — 9.25 | +0.59 | — 8.66 | F. E. Nipher. | Trans. St. Louis Acad. Sc. |
| Hermann. | 38 42 | 91 27 | 1872.74 | — 8.23 | +1.25 | — 6.98 | T. C. Hilgard. | Nat. Acad. Sc. |
| Marion. | 38 42 | 92 25 | 1881.65 | 7.66 | +0.60 | — 7.06 | F. E. Nipher. | Trans. St. Louis Acad. Sc. |
| Sedalia. | 38 42 | 93 16 | 1879.60 | — 8.76 | +0.74 | — 8.02 | F. E. Nipher. | Trans. St. Louis Acad. Sc. |
| Opposite St. Charles and Pattonsville. | 38 43 | 90 30 | 1881.68 | — 6.61* | +0.60 | — 6.01 | F. E. Nipher. | Trans. St. Louis Acad. Sc. and MS. |
| Dardenne and Healds. | 38 43 | 90 41 | 1882.15 | — 6.66* | +0.57 | — 6.09 | F. E. Nipher. | Trans. St. Louis Acad. Sc. and MS. |
| Little Auxvasse Creek. | 38 43 | 92 01 | 1882.50 | — 7.92 | +0.54 | — 7.38 | F. E. Nipher. | MS. in C. and G. S. Office. |
| Warrenton. | 38 46 | 91 09 | 1882.63 | — 6.56 | +0.54 | — 6.02 | F. E. Nipher. | MS. in C. and G. S. Office. |
| Florissant. | 38 47 | 90 17 | 1881.68 | — 6.58 | +0.60 | — 5.98 | F. E. Nipher. | Trans. St. Louis Acad. Sc. |
| O'Fallon. | 38 47 | 90 43 | 1880.83 | — 6.76 | +0.66 | — 6.10 | F. E. Nipher. | Trans. St. Louis Acad. Sc. |
| Wright's City. | 38 47 | 91 00 | 1878.53 | — 8.23 | +0.83 | — 7.40 | F. E. Nipher. | Trans. St. Louis Acad. Sc. |
| Providence. | 38 49 | 92 28 | 1881.66 | — 7.65 | +0.60 | — 7.05 | F. E. Nipher. | Trans. St. Louis Acad. Sc. |
| Johnson's Farm and Prairie Home. | 38 50 | 92 40 | 1881.64 | — 7.56* | +0.60 | — 6.96 | F. E. Nipher. | Trans. St. Louis Acad. Sc. |
| Danville. | 38 51 | 91 32 | 1881.67 | — 7.80 | +0.60 | — 7.20 | F. E. Nipher. | Trans. St. Louis Acad. Sc. |
| Swope's or Black Water. | 38 52 | 93 35 | 1881.61 | — 8.62 | +0.59 | — 8.03 | F. E. Nipher. | Trans. St. Louis Acad. Sc. |
| Sweet Springs. | 38 55 | 93 29 | 1881.62 | — 9.40 | +0.59 | — 8.81 | F. E. Nipher. | Trans. St. Louis Acad. Sc. |
| Columbia, old and new station. | 38 56 | 92 19 | 1880.10 | — 7.55 | +0.72 | — 6.83 | F. E. Nipher. | Trans. St. Louis Acad. Sc. and MS. |
| Loomis's Farm. | 38 57 | 91 47 | 1881.67 | — 7.77 | +0.60 | 7.17 | F. E. Nipher. | Trans. St. Louis Acad. Sc. |
| Franklin. | 38 57 | 92 57 | 1819.54 | —11.70 | +3.25 | — 8.45 | S. H. Long. | Sill. Jour., Vol. 34, 1838. |

* Mean of two determinations.

*Table of Observed Magnetic Declinations and Values reduced to the Year* 1890—Continued.

MISSOURI—Continued.

| Name of station. | φ | λ | t | D | ΔD | $D_{1890.0}$ | Observer. | Reference. |
|---|---|---|---|---|---|---|---|---|
| | ° ′ | ° ′ | | ° | ° | ° | | |
| McCredie. | 38 58 | 91 55 | 1881.67 | — 7.84 | +0.60 | — 7.24 | F. E. Nipher. | Trans. St. Louis Acad. Sc. |
| Stevens' Store. | 38 58 | 92 05 | 1882.50 | — 7.61 | +0.54 | — 7.07 | F. E. Nipher. | MS. in C. and G. S. Office. |
| Montgomery City. | 39 00 | 91 30 | 1882.63 | — 7.12 | +0.54 | — 6.58 | F. E. Nipher. | MS. in C. and G. S. Office. |
| Herndon. | 39 00 | 93 21 | 1881.62 | — 8.92 | +0.59 | — 8.33 | F. E. Nipher. | Trans. St. Louis Acad. Sc. |
| Arrow Rock and Clark's Farm. | 39 04 | 92 58 | 1881.63 | — 7.90* | +0.59 | — 7.31 | F. E. Nipher. | Trans. St. Louis Acad. Sc. |
| Kansas City. | 39 07 | 94 38 | 1879.64 | —10.22* | +0.74 | — 9.48 | F. E. Nipher and J. B. Kaufman. | Trans. St. Louis Acad. Sc. and MS. |
| Marshall. | 39 08 | 93 17 | 1881.63 | — 8.54 | +0.59 | — 7.95 | F. E. Nipher. | Trans. St. Louis Acad. Sc. |
| Mexico. | 39 11 | 91 52 | 1878.53 | — 7.64 | +0.83 | — 6.81 | F. E. Nipher. | Trans. St. Louis Acad. Sc. |
| Lexington. | 39 12 | 93 53 | 1879.64 | — 8.92 | +0.74 | — 8.18 | F. E. Nipher. | Trans. St. Louis Acad. Sc. |
| Centralia. | 39 13 | 92 05 | 1882.51 | — 7.95 | +0.54 | — 7.41 | F. E. Nipher. | MS. in C. and G. S. Office. |
| Glasgow. | 39 13 | 92 50 | 1879.55 | — 8.36 | +0.74 | — 7.62 | F. E. Nipher. | Trans. St. Louis Acad. Sc. |
| Carrollton. | 39 21 | 93 33 | 1879.57 | — 8.50 | +0.74 | — 7.76 | F. E. Nipher. | Trans. St. Louis Acad. Sc. |
| Long Branch of Salt River. | 39 22 | 91 59 | 1882.62 | — 8.00 | +0.54 | — 7.46 | F. E. Nipher. | MS. in C. and G. S. Office. |
| Long Branch of Salt River. | 39 24 | 92 10 | 1882.51 | — 8.11 | +0.54 | — 7.57 | F. E. Nipher. | MS. in C. and G. S. Office. |
| Cow Island. | 39 25 | 94 00 | 1819.63 | —11.54 | +3.22 | — 8.32 | S. H. Long. | Sill. Jour., Vol. 34, 1838. |
| Moberly. | 39 26 | 92 26 | 1882.51 | — 7.66 | +0.54 | — 7.12 | F. E. Nipher. | MS. in C. and G. S. Office. |
| Louisiana. | 39 28 | 91 07 | 1878.55 | — 7.12 | +0.83 | — 6.29 | F. E. Nipher. | Trans. St. Louis Acad. Sc. |
| Winkler's. | 39 35 | 92 00 | 1882.62 | — 7.74 | +0.54 | — 7.20 | F. E. Nipher. | MS. in C. and G. S. Office. |
| Walford's. | 39 38 | 93 45 | 1882.55 | — 8.67 | +0.55 | — 8.12 | F. E. Nipher. | MS. in C. and G. S. Office. |
| Kingston and Smith's. | 39 40 | 94 08 | 1882.55 | — 9.42* | +0.55 | — 8.87 | F. E. Nipher. | MS. in C. and G. S. Office. |
| Maysville. | 39 43 | 94 24 | 1882.56 | — 9.30 | +0.55 | — 8.75 | F. E. Nipher. | MS. in C. and G. S. Office. |
| Hannibal. | 39 44 | 91 24 | 1878.56 | — 7.14 | +0.83 | — 6.31 | F. E. Nipher. | Trans. St. Louis Acad. Sc. |

*Mean of two determinations.

*Table of Observed Magnetic Declinations and Values reduced to the Year* 1890—Continued.

MISSOURI—Continued.

| Name of station. | φ | λ | t | D | ΔD | $D_{1890.0}$ | Observer. | Reference. |
|---|---|---|---|---|---|---|---|---|
| | ° ′ | ° ′ | | ° | ° | ° | | |
| Shelbyville. | 39 44 | 92 04 | 1882.62 | — 7.78 | +0.54 | — 7.24 | F. E. Nipher. | MS. in C. and G. S. Office. |
| Macon. | 39 46 | 92 30 | 1882.52 | — 7.98 | +0.54 | — 7.44 | F. E. Nipher. | MS. in C. and G. S. Office. |
| Saint Joseph. | 39 46 | 94 49 | 1879.66 | — 8.94 | +0.77 | — 8.17 | F. E. Nipher and J. B. Kaufman. | Trans. St. Louis Acad. Sc. and MS. |
| One mile west of Laclede. | 39 47 | 93 17 | 1882.54 | — 8.18 | +0.55 | — 7.63 | F. E. Nipher. | MS. in C. and G. S. Office. |
| Chillicothe. | 39 47 | 93 34 | 1879.56 | — 8.52 | +0.74 | — 7.78 | F. E. Nipher. | Trans. St. Louis Acad. Sc. |
| Isaac Lewis's. | 39 48 | 92 37 | 1882.52 | — 7.98 | +0.54 | — 7.44 | F. E. Nipher. | MS. in C. and G. S. Office. |
| Linneus. | 39 51 | 93 13 | 1882.54 | — 7.93 | +0.55 | — 7.38 | F. E. Nipher. | MS. in C. and G. S. Office. |
| Harris. | 39 53 | 92 22 | 1882.61 | — 7.62 | +0.54 | — 7.08 | F. E. Nipher. | MS. in C. and G. S. Office. |
| West Branch, Yellow Creek. | 39 54 | 93 07 | 1882.53 | — 8.27 | +0.55 | — 7.72 | F. E. Nipher. | MS. in C. and G. S. Office. |
| Mercyville. | 39 57 | 92 42 | 1882.53 | — 8.28 | +0.55 | — 7.73 | F. E. Nipher. | MS. in C. and G. S. Office. |
| La Plata. | 40 00 | 92 34 | 1882.61 | — 8.15 | +0.55 | — 7.60 | F. E. Nipher. | MS. in C. and G. S. Office. |
| Johnson's. | 40 01 | 94 23 | 1882.56 | — 9.55 | +0.55 | — 9.00 | F. E. Nipher. | MS. in C. and G. S. Office. |
| Trenton. | 40 03 | 93 39 | 1882.58 | — 8.06 | +0.55 | — 7.51 | F. E. Nipher. | MS. in C. and G. S. Office. |
| Honan's and Michael's. | 40 06 | 93 54 | 1882.58 | — 8.79 | +0.55 | — 8.24 | F. E. Nipher. | MS. in C. and G. S. Office. |
| Canton. | 40 09 | 91 36 | 1878.57 | — 7.32 | +0.83 | — 6.49 | F. E. Nipher. | Trans. St. Louis Acad. Sc. |
| Shicklerville. | 40 09 | 92 58 | 1882.60 | — 8.87 | +0.55 | — 8.32 | F. E. Nipher. | MS. in C. and G. S. Office. |
| Kirksville. | 40 12 | 92 37 | 1882.61 | — 8.28 | +0.55 | — 7.73 | F. E. Nipher. | Trans. St. Louis Acad. Sc. |
| Milan. | 40 12 | 93 11 | 1882.60 | — 8.30 | +0.55 | — 7.75 | F. E. Nipher. | MS. in C. and G. S. Office. |
| Amick's. | 40 13 | 93 38 | 1882.59 | — 8.23 | +0.55 | — 7.68 | F. E. Nipher. | MS. in C. and G. S. Office. |
| Albany. | 40 15 | 94 21 | 1882.57 | — 8.43 | +0.55 | — 7.88 | F. E. Nipher. | MS. in C. and G. S. Office. |
| Bethany. | 40 16 | 94 03 | 1882.57 | — 8.72 | +0.55 | — 8.17 | F. E. Nipher. | MS. in C. and G. S. Office. |
| SE. corner station. | 40 16 | 94 17 | 1882.57 | — 8.55 | +0.55 | — 8.00 | F. E. Nipher. | MS. in C. and G. S. Office. |

*Table of Observed Magnetic Declinations and Values reduced to the Year* 1890—Continued.

MISSOURI—Continued.

| Name of station. | φ | λ | t | D | ΔD | $D_{1890.0}$ | Observer. | Reference. |
|---|---|---|---|---|---|---|---|---|
| | ° ′ | ° ′ | | ° | ° | ° | | |
| Bankes's. | 40 19 | 93 07 | 1882.60 | — 8.63 | +0.55 | — 8.08 | F. E. Nipher. | MS. in C. and G. S. Office. |
| Maryville. | 40 21 | 94 58 | 1879.59 | —11.23 | +0.77 | —10.46 | F. E. Nipher. | Trans. St. Louis Acad. Sc. |
| Princeton. | 40 24 | 93 39 | 1882.59 | — 8.79 | +0.55 | — 8.24 | F. E. Nipher. | MS. in C. and G. S. Office. |
| Memphis. | 40 27 | 92 13 | 1878.58 | — 7.80 | +0.83 | — 6.97 | F. E. Nipher. | Trans. St. Louis Acad. Sc. |
| Williams's. | 40 27 | 93 21 | 1882.59 | — 8.65 | +0.55 | — 8.10 | F. E. Nipher. | MS. in C. and G. S. Office. |
| Ward's and Unionville. | 40 28 | 93 06 | 1882.60 | — 8.25 | +0.55 | — 7.70 | F. E. Nipher. | MS. in C. and G. S. Office. |

MONTANA.

Group 1.

| | | | | | | | | |
|---|---|---|---|---|---|---|---|---|
| Fort Ellis. | 45 40 | 110 58 | 1882.66 | —19.58 | +0.24 | —19.34 | B. A. Colonna. | MS. in C. and G. S. Office. |

Group 2.

| | | | | | | | | |
|---|---|---|---|---|---|---|---|---|
| Head of Gallatin. | 45 15 | 111 00 | 1872.72 | —19.15 | +0.42 | —18.73 | F. V. Hayden. | Geol.Sur.Ter.,1873. |
| Madison River. | 45 16 | 111 41 | 1860.5 | —19.00 | 0.00 | —19.00 | (W. F. Raynolds). | Mo. and Yel. St. Expl. Exp., 1865. |
| Virginia City. | 45 19 | 111 56 | 1872.66 | —19.25 | +0.42 | —18.83 | F. V. Hayden. | Geol.Sur.Ter.,1873. |
| Powder River. | 45 47 | 105 03 | 1859.5 | —16.90 | +0.45 | —16.45 | (W. F. Raynolds). | Mo. and Yel. St. Expl. Exp., 1865. |
| Near Three Forks of Missouri. | 45 52 | 111 22 | 1860.5 | —20.48 | 0.00 | —20.48 | (W. F. Raynolds). | Mo. and Yel. St. Expl. Exp., 1865. |
| Yellowstone River. | 45 56 | 108 22 | 1860.5 | —17.93 | +0.22 | —17.71 | (W. F. Raynolds). | Mo. and Yel. St. Expl. Exp., 1865. |
| Rosebud River. | 46 03 | 106 23 | 1859.5 | —17.83 | +0.45 | —17.38 | (W. F. Raynolds). | Mo. and Yel. St. Expl. Exp., 1865. |
| Fort Sarpy. | 46 18 | 107 04 | 1859.5 | —18.00 | +0.45 | —17.55 | (W. F. Raynolds). | Mo. and Yel. St. Expl. Exp., 1865. |
| Fort Owen. | 46 31 | 113 58 | 1853.5 | —19.42 | —0.28 | —19.70 | I. I. Stevens. | C. S. Rep., 1856. |
| Helena. | 46 36 | 112 02* | 1872.78 | —19.98 | +0.42 | —19.56 | F. V. Hayden. | Geol.Sur.Ter.,1873. |
| Hell Gate. | 46 52 | 113 59 | 1860.5 | —21.00 | 0.00 | —21.00 | J. Mullan. | Stone's Mag. Var., 1878. |
| Bitter Root. | 47 19 | 115 04 | 1860.5 | —20.75 | —0.22 | —20.97 | J. Mullan. | Stone's Mag. Var., 1878. |
| Fort Benton. | 47 50 | 110 39 | 1860.5 | —20.40 | 0.00 | —20.40 | J. Mullan. | Stone's Mag. Var., 1878. |
| Near Fort Union. | 47 56 | 104 02 | 1860.5 | —19.93 | +0.90 | —19.03 | J. Mullan. | Mo. and Yel. St. Expl. Exp., 1865. |

*Corrected.

*Table of Observed Magnetic Declinations and Values reduced to the Year* 1890—Continued.

MONTANA—Continued.

| Name of station. | $\varphi$ | $\lambda$ | $t$ | D | $\Delta$D | $D_{1890.0}$ | Observer. | Reference. |
|---|---|---|---|---|---|---|---|---|
| | ° ′ | ° ′ | | ° | ° | ° | | |
| Fort Union. | 48 03 | 104 00 | 1853.5 | —16.80 | +0.96 | —15.84 | I. I. Stevens. | C. S. Rep., 1856. |
| South Crossing Kootenay. | 48 22 | 115 21 | 1861.51 | —22.27 | —0.20 | —22.47 | R. W. Haig. | Phil. Trans. Roy. Soc., 1864. |
| Kootenay River. | 48 40 | 115 17 | 1861.51 | —23.40 | —0.20 | —23.60 | R. W. Haig. | Phil. Trans. Roy. Soc., 1864. |
| Camp Kootenay East. | 48 59 | 115 12 | 1861.5 | —22.97 | —0.20 | —23.17 | J. S. Harris. | MS. (NW. Bound. Sur.). |
| Northwest Boundary Station. | 49 00 | 104 05 | 1873.7 | —18.42 | +0.67 | —17.75 | W. J. Twining. | Rep. NW. Bound., 1878. |
| Do. | 49 00 | 104 20 | 1873.7 | —18.83 | +0.67 | —18.16 | W. J. Twining. | Rep. NW. Bound., 1878. |
| Do. | 49 00 | 104 30 | 1874.5 | —18.50 | +0.63 | —17.87 | W. J. Twining. | Rep. NW. Bound., 1878. |
| Do. | 49 00 | 104 45 | 1873.7 | —18.25 | +0.67 | —17.58 | W. J. Twining. | Rep. NW. Bound., 1878. |
| Do. | 49 00 | 105 10 | 1873.7 | —19.53 | +0.67 | —18.86 | W. J. Twining. | Rep. NW. Bound., 1878. |
| Do. | 49 00 | 105 25 | 1873.8 | —19.93 | +0.66 | —19.27 | W. J. Twining. | Rep. NW. Bound., 1878. |
| Do. | 49 00 | 105 30 | 1874.5 | —19.83 | +0.63 | —19.20 | W. J. Twining. | Rep. NW. Bound., 1878. |
| Do. | 49 00 | 105 33 | 1873.8 | —19.75 | +0.66 | —19.09 | W. J. Twining. | Rep. NW. Bound., 1878. |
| Do. | 49 00 | 105 45 | 1874.5 | —20.25 | +0.63 | —19.62 | W. J. Twining. | Rep. NW. Bound., 1878. |
| Do. | 49 00 | 105 55 | 1874.5 | —19.83 | +0.63 | —19.20 | W. J. Twining. | Rep. NW. Bound., 1878. |
| Do. | 49 00 | 106 05 | 1874.5 | —20.33 | +0.63 | —19.70 | W. J. Twining. | Rep. NW. Bound., 1878. |
| Do. | 49 00 | 106 28 | 1874.5 | —20.50 | +0.63 | —19.87 | W. J. Twining. | Rep. NW. Bound., 1878. |
| Do. | 49 00 | 106 30 | 1874.5 | —20.33 | +0.63 | —19.70 | W. J. Twining. | Rep. NW. Bound., 1878. |
| Do. | 49 00 | 106 45 | 1874.6 | —20.17 | +0.63 | —19.54 | W. J. Twining. | Rep. NW. Bound., 1878. |
| Do. | 49 00 | 106 50 | 1874.6 | —20.33 | +0.63 | —19.70 | W. J. Twining. | Rep. NW. Bound., 1878. |
| Do. | 49 00 | 106 55 | 1874.6 | —20.00 | +0.63 | —19.37 | W. J. Twining. | Rep. NW. Bound., 1878. |
| Do. | 49 00 | 107 10 | 1874.6 | —20.67 | +0.63 | —20.04 | W. J. Twining. | Rep. NW. Bound., 1878. |
| Do. | 49 00 | 107 15 | 1874.6 | —20.17 | +0.63 | —19.54 | W. J. Twining. | Rep. NW. Bound., 1878. |
| Do. | 49 00 | 107 30 | 1874.5 | —20.75 | +0.63 | —20.12 | W. J. Twining. | Rep. NW. Bound., 1878. |

*Table of Observed Magnetic Declinations and Values reduced to the Year* 1890—Continued.

MONTANA—Continued.

| Name of station. | φ | λ | t | D | Δ D | $D_{1890.0}$ | Observer. | Reference. |
|---|---|---|---|---|---|---|---|---|
| | ° ′ | ° ′ | | ° | ° | ° | | |
| Northwest Boundary Station. | 49 00 | 107 40 | 1874.6 | —20.83 | +0.63 | —20.20 | W. J. Twining. | Rep. NW. Bound., 1878. |
| Do. | 49 00 | 107 50 | 1874.6 | —20.63 | +0.63 | —20.00 | W. J. Twining. | Rep. NW. Bound., 1878. |
| Do. | 49 00 | 109 00 | 1874.5 | —21.00 | +0.50 | —20.50 | W. J. Twining. | Rep. NW. Bound., 1878. |
| Do. | 49 00 | 109 40 | 1874.6 | —20.38 | +0.50 | —19.88 | W. J. Twining. | Rep. NW. Bound., 1878. |
| Do. | 49 00 | 110 30 | 1874.5 | —22.00 | +0.50 | —21.50 | W. J. Twining. | Rep. NW. Bound., 1878. |
| Do. | 49 00 | 110 45 | 1874.6 | —22.75 | +0.50 | —22.25 | W. J. Twining. | Rep. NW. Bound., 1878. |
| Do. | 49 00 | 111 05 | 1874.6 | —22.17 | +0.50 | —21.67 | W. J. Twining. | Rep. NW. Bound., 1878. |
| Do. | 49 00 | 111 28 | 1874.6 | —22.67 | +0.50 | —22.17 | W. J. Twining. | Rep. NW. Bound., 1878. |
| Do. | 49 00 | 111 30 | 1874.6 | —22.42 | +0.50 | —21.92 | W. J. Twining. | Rep. NW. Bound., 1878. |
| Do. | 49 00 | 111 35 | 1874.6 | —22.17 | +0.50 | —21.67 | W. J. Twining. | Rep. NW. Bound., 1878. |
| Do. | 49 00 | 112 00 | 1874.6 | —22.50 | +0.38 | —22.12 | W. J. Twining. | Rep. NW. Bound., 1878. |
| Do. | 49 00 | 112 35 | 1874.6 | —22.50 | +0.38 | —22.12 | W. J. Twining. | Rep. NW. Bound., 1878. |
| Do. | 49 00 | 112 55 | 1874.6 | —22.53 | +0.38 | —22.15 | W. J. Twining. | Rep. NW. Bound., 1878. |
| Do. | 49 00 | 113 00 | 1874.6 | —22.83 | +0.38 | —22.45 | W. J. Twining. | Rep. NW. Bound., 1878. |
| Do. | 49 00 | 113 05 | 1874.6 | —23.27 | +0.38 | —22.89 | W. J. Twining. | Rep. NW. Bound., 1878. |
| Do. | 49 00 | 113 20 | 1874.6 | —23.75 | +0.38 | —23.37 | W. J. Twining. | Rep. NW. Bound., 1878. |
| Northwest Boundary Station, near R. M. Divide. | 49 00 | 113 40 | 1874.6 | —23.83 | +0.38 | —23.45 | W. J. Twining. | Rep. NW. Bound., 1878. |
| Northwest Boundary Station near Divide. | 49 00 | 114 00 | 1874.6 | —23.33 | +0.38 | —22.95 | W. J. Twining. | Rep. NW. Bound., 1878. |
| Camp Kishenehu. | 49 00 | 114 21 | 1861.5 | —22.97 | 0.00 | —22.97 | J. S. Harris. | MS. (NW. Bound. Sur.). |

NEBRASKA. Group 1.

| | | | | | | | | |
|---|---|---|---|---|---|---|---|---|
| Omaha (S. V. S.). | 41 16 | 95 56 | 1888.74 | — 9.49 | ------ | —9.46 | J. B. Baylor. | MS. in C. and G. S. Office. |

***Table of Observed Magnetic Declinations and Values reduced to the Year* 1890—Continued.**

NEBRASKA—Continued. Group 2.

| Name of station. | φ | λ | t | D | ΔD | $D_{1890.0}$ | Observer. | Reference. |
|---|---|---|---|---|---|---|---|---|
| | ° ′ | ° ′ | | ° | ° | ° | | |
| Rock Creek. | 40 11 | 97 02 | 1858.6 | —12.10* | +2.14 | — 9.96 | J. H. Simpson. | Stone's Mag. Var., 1878. |
| Big Sandy River. | 40 12 | 97 12 | 1858.6 | —13.65* | +2.14 | —11.51 | J. H. Simpson. | Stone's Mag. Var., 1878. |
| Little Blue River. | 40 15 | 98 10 | 1858.6 | —13.72* | +2.14 | —11.58 | J. H. Simpson. | Stone's Mag. Var., 1878. |
| Brownville. | 40 28 | 95 44 | 1877.5 | —11.25 | +0.93 | —10.32 | A. H. Baisdell. | Rep. Ch. of Eng's, 1878. |
| Peru. | 40 30 | 95 45 | 1888.42 | —10.22 | +0.11 | —10.11 | H. W. Bouton. | MS. in C. and G. S. Office. |
| Elm Creek. | 40 30 | 98 30 | 1858.6 | —12.30* | +1.90 | —10.40 | J. H. Simpson. | Stone's Mag. Var., 1878. |
| Fort Kearney. | 40 38 | 98 56 | 1858.7 | —13.63* | +1.81 | —11.82 | J. H. Simpson. | Stone's Mag. Var., 1878. |
| Camp No. 2. | 40 40 | 99 54 | 1858.7 | —13.28* | +1.64 | —11.64 | J. H. Simpson. | Stone's Mag. Var., 1878. |
| Nebraska City. | 40 42 | 95 52 | 1880.5 | —10.22 | +0.71 | — 9.51 | C. R. Suter. | Rep. Ch. of Eng's, 1880. |
| Grand Island. | 40 55 | 98 18 | 1878.66 | —12.86 | +0.84 | —12.02 | T. E. Thorpe. | Proc. Roy. Soc., 1880. |
| Do. | 40 55 | 98 23 | 1872.82 | —13.22 | +1.24 | —11.98 | T. C. Hilgard. | Nat. Acad. Sc. |
| Platte River. | 40 58 | 100 35 | 1858.9 | —13.53* | +1.64 | —11.89 | J. H. Simpson. | Stone's Mag. Var., 1878. |
| Plattsmouth. | 41 01 | 95 53 | 1877.5 | —11.25 | +0.93 | —10.32 | A. H. Baisdell. | Rep. Ch. of Eng's, 1878. |
| Camp No. 25. | 41 03 | 101 50 | 1858.7 | —13.35* | +1.47 | —11.88 | J. H. Simpson. | Stone's Mag. Var., 1878. |
| Camp No. 22. | 41 05 | 100 50 | 1858.7 | —11.08* | +1.64 | — 9.44 | J. H. Simpson. | Stone's Mag. Var., 1878. |
| Sidney. | 41 08 | 102 55 | 1872.82 | —14.62 | +0.81 | —13.81 | T. C. Hilgard. | Nat. Acad. Sc. |
| North Platte. | 41 11 | 100 45 | 1872.82 | —13.12 | +1.02 | —12.10 | T. C. Hilgard. | Nat. Acad. Sc. |
| Do. | 41 23 | 102 15 | 1858.7 | —15.43* | +1.47 | —13.96 | J. H. Simpson. | Stone's Mag. Var., 1878. |
| Engineer's Cantonment. | 41 25 | 96 00 | 1819.72 | —12.98 | +3.17 | — 9.81 | S. H. Long. | Expl. Exp'n to the Rocky Mts., 1823. |
| North Platte. | 41 58 | 104 00 | 1858.7 | —15.60* | +1.14 | —14.46 | J. H. Simpson. | Stone's Mag. Var., 1878. |
| Niobrara River. | 42 34 | 103 57 | 1877.74 | —15.45 | +0.63 | —14.82 | W. S. Stanton. | Rep. Ch. of Eng's, 1878. |
| Soldier's Creek. | 42 40 | 103 28 | 1877.75 | —15.50 | +0.63 | —14.87 | W. S. Stanton. | Rep. Ch. of Eng's, 1878. |
| Indian Creek. | 42 59 | 104 03 | 1877.81 | —16.65 | +0.63 | —16.02 | W. S. Stanton. | Rep. Ch. of Eng's, 1878. |

*An index correction of + 1° has been applied to all of Captain Simpson's declinations.—[SCH.]

*Table of Observed Magnetic Declinations and Values reduced to the Year* 1890—Continued.

NEVADA.

Group 1.

| Name of station. | φ | λ | t | D | ΔD | $D_{1890.0}$ | Observer. | Reference. |
|---|---|---|---|---|---|---|---|---|
| | ° ′ | ° ′ | | ° | ° | ° | | |
| Pioche trian. station. | 37 59 | 114 03 | 1883.74 | —17.18 | +0.10 | —17.08 | W. Eimbeck and G. F. Bird. | MS. in C. and G. S. Office. |
| White Pine. | 38 19 | 115 30 | 1881.88 | —16.07 | +0.12 | —15.95 | W. Eimbeck and R. A. Marr. | C. and G. S. Rep., 1881, App. 9. |
| Jeff. Davis. | 38 59 | 114 19 | 1882.89 | —16.50 | +0.11 | —16.39 | W. Eimbeck and R. A. Marr. | MS. in C. and G. S. Office. |
| Tres Pinos. | 39 00 | 114 14 | 1882.92 | —16.38 | +0.11 | —16.27 | W. Eimbeck and R. A. Marr. | MS. in C. and G. S. Office. |
| Lehman's Ranch. | 39 01 | 114 08 | 1882.94 | —16.28 | +0.11 | —16.17 | W. Eimbeck and R. A. Marr. | MS. in C. and G. S. Office. |
| Austin. | 39 29 | 117 04 | 1881.41 | —16.95 | +0.13 | —16.82 | W. Eimbeck and R. A. Marr. | C. and G. S. Rep., 1881, App. 9. |
| Reno. | 39 30 | 119 49 | 1881.28 | —17.81 | +0.14 | —17.67 | W. Eimbeck and R. A. Marr. | C. and G. S. Rep., 1881, App. 9. |
| Eureka, town. | 39 31 | 115 58 | 1881.38 | —16.61 | +0.13 | —16.48 | W. Eimbeck and R. A. Marr. | C. and G. S. Rep., 1881, App. 9. |
| Verdi. | 39 31 | 119 59 | 1889.53 | —17.44 | 0.00 | —17.44 | R. A. Marr. | MS. in C. and G. S. Office. |
| Eureka trian. station. | 39 35 | 115 49 | 1881.70 | —16.83 | +0.12 | —16.71 | W. Eimbeck and R. A. Marr. | C. and G. S. Rep., 1881, App. 9. |
| Mount Callahan. | 39 43 | 116 57 | 1881.53 | —17.07 | +0.12 | —16.95 | W. Eimbeck and R. A. Marr. | C. and G. S. Rep., 1881, App. 9. |
| Hot Springs. | 39 47 | 118 56 | 1881.29 | —17.44 | +0.14 | —17.30 | W. Eimbeck and R. A. Marr. | C. and G. S. Rep., 1881, App. 9. |
| Mineral Hill. | 40 10 | 116 12 | 1881.39 | —17.05 | +0.14 | —16.91 | W. Eimbeck and R. A. Marr. | C. and G. S. Rep., 1881, App. 9. |
| Rye Patch. | 40 26 | 118 18 | 1881.30 | —17.83 | +0.14 | —17.69 | W. Eimbeck and R. A. Marr. | C. and G. S. Rep., 1881, App. 9. |
| Battle Mountain. | 40 40 | 116 50 | 1881.31 | —17.58 | +0.14 | —17.44 | W. Eimbeck and R. A. Marr. | C. and G. S. Rep., 1881, App. 9. |
| Elko. | 40 47 | 115 46 | 1881.32 | —17.51 | +0.14 | —17.37 | W. Eimbeck and R. A. Marr. | C. and G. S. Rep., 1881, App. 9. |
| Winnemucca. | 40 59 | 117 44 | 1881.30 | —17.65 | +0.14 | —17.51 | W. Eimbeck and R. A. Marr. | C. and G. S. Rep., 1881, App. 9. |
| Wells Station. | 41 07 | 114 56 | 1881.32 | —17.36 | +0.14 | —17.22 | W. Eimbeck and R. A. Marr. | C. and G. S. Rep., 1881, App. 9. |
| Tecoma. | 41 20 | 114 06 | 1881.33 | —17.47 | +0.14 | —17.33 | W. Eimbeck and R. A. Marr. | C. and G. S. Rep., 1881, App. 9. |

Group 2.

| | | | | | | | | |
|---|---|---|---|---|---|---|---|---|
| Vegas Wash. | 36 07 | 114 40 | 1869.5 | —16.02 | +0.10 | —15.92 | G. W. Wheeler and D. W. Lockwood. | Rep. Ch. of Eng's, 1876. |

*Table of Observed Magnetic Declinations and Values reduced to the Year* 1890—Continued.

NEVADA†—Continued.

| Name of station. | | λ | t | D | ΔD | $D_{1890.0}$ | Observer. | Reference. |
|---|---|---|---|---|---|---|---|---|
| | ° ′ | ° ′ | | ° | ° | ° | | |
| Stone Ferry. | 36 08 | 114 25 | 1875.6 | −14.97 | +0.15 | −14.82 | E. Bergland. | Rep. Ch. of Eng's, 1876. |
| Mouth of Rio Virgin. | 36 09 | 114 22 | 1869.5 | −15.79 | +0.10 | −15.69 | G. W. Wheeler and D.W. Lockwood. | Rep. Ch. of Eng's, 1876. |
| Las Vegas Range. | 36 11 | 115 03 | 1869.5 | −15.14 | +0.10 | −15.04 | G. W. Wheeler and D.W. Lockwood. | Rep. Ch. of Eng's, 1876. |
| Saint Thomas. | 36 27 | 114 19 | 1869.5 | −15.79 | +0.10 | −15.69 | G. W. Wheeler and D.W. Lockwood. | Rep. Ch. of Eng's, 1876. |
| Indian Spring. | 36 34 | 115 35 | 1869.5 | −15.69 | +0.10 | −15.59 | G. W. Wheeler. | Rep. Ch. of Eng's, 1876. |
| West Point. | 36 41 | 114 34 | 1869.5 | −15.32 | +0.10 | −15.22 | G. W. Wheeler and D.W. Lockwood. | Rep. Ch. of Eng's, 1876. |
| Mud Spring. | 37 11 | 115 35 | 1869.5 | −16.05 | +0.10 | −15.95 | G. W. Wheeler and D.W. Lockwood. | Rep. Ch. of Eng's, 1876. |
| Mormon Cañon. | 37 16 | 114 28 | 1869.5 | −16.58 | +0.10 | −16.48 | G. W. Wheeler and D.W. Lockwood. | Rep. Ch. of Eng's, 1876. |
| Clover Valley. | 37 30 | 114 14 | 1869.5 | −14.42 | +0.10 | −14.32 | G. W. Wheeler and D.W. Lockwood. | Rep. Ch. of Eng's, 1876. |
| Schafer Spring. | 37 34 | 115 27 | 1869.5 | −16.18 | +0.10 | −16.08 | D. W. Lockwood. | Rep. Ch. of Eng's, 1876. |
| Spring below Panacea. | 37 46 | 114 27 | 1869.5 | −16.98 | +0.10 | −16.88 | G. W. Wheeler. | Rep. Ch. of Eng's, 1876. |
| Rose Valley. | 37 55 | 114 16 | 1869.5 | −17.84 | +0.10 | −17.74 | G. W. Wheeler and D.W. Lockwood. | Rep. Ch. of Eng's, 1876. |
| Pioche. | 37 55 | 114 26 | 1872.5 | −15.97 | +0.13 | −15.84 | Eng'r Officer. | Tab. Geo. Pos. U. S. Eng's, 1883. |
| Quinn Cañon. | 37 58 | 115 45 | 1869.5 | −16.34 | +0.10 | −16.24 | G. W. Wheeler and D.W. Lockwood. | Rep. Ch. of Eng's, 1876. |
| Homer, Cedar Valley. | 38 03 | 114 10 | 1869.5 | −17.67 | +0.10 | −17.57 | G. W. Wheeler. | Rep. Ch. of Eng's, 1876. |
| Sheep Range, Cedar Valley. | 38 14 | 114 22 | 1869.5 | −16.77 | +0.10 | −16.67 | G. W. Wheeler. | Rep. Ch. of Eng's, 1876. |
| Milo, Hop Creek. | 38 23 | 114 30 | 1869.5 | −16.00 | +0.10 | −15.90 | G. W. Wheeler. | Stone's Mag. Var., 1878. |
| Cave Valley. | 38 39 | 114 49 | 1869.5 | −16.27 | +0.10 | −16.17 | G. W. Wheeler and D.W. Lockwood. | Rep. Ch. of Eng's, 1876. |
| Benson's Creek. | 38 41 | 114 38 | 1869.5 | −16.40 | +0.10 | −16.30 | G. W. Wheeler. | Rep. Ch. of Eng's, 1876. |
| Clear Creek. | 38 50 | 114 25 | 1869.5 | −16.44 | +0.10 | −16.34 | G. W. Wheeler. | Rep. Ch. of Eng's, 1876. |
| Dead Horse Well. | 38 54 | 118 23 | 1876.5 | −16.50 | +0.15 | −16.35 | Eng'r Officer. | Tab. Geo. Pos. U. S. Eng's, 1883. |
| Rattlesnake Spring. | 38 57 | 114 26 | 1869.5 | −16.30 | +0.10 | −16.20 | G. W. Wheeler and D.W. Lockwood. | Rep. Ch. of Eng's, 1876. |

† The longitudes for the most part were assigned by myself; the values are approximate.—[SCH.]

*Table of Observed Magnetic Declinations and Values reduced to the Year* 1890—Continued.

NEVADA—Continued.

| Name of station. | φ | λ | t | D | ΔD | $D_{1890.0}$ | Observer. | Reference. |
|---|---|---|---|---|---|---|---|---|
| | ° ′ | ° ′ | | ° | ° | ° | | |
| McMahon's Ranch. | 38 59 | 117 28 | 1876.5 | —15.69 | +0.15 | —15.54 | Eng'r Officer. | Tab. Geo. Pos. U. S. Eng's, 1883. |
| Genoa Carson Valley. | 39 00 | 119 40 | 1877.0 | —16.78 | +0.05 | —16.73 | J. N. Macomb. | Rep. Ch. of Eng's, 1876. |
| Ice Creek. | 39 02 | 114 49 | 1869.5 | —16.58 | +0.10 | —16.48 | G. W. Wheeler and D. W. Lockwood. | Rep. Ch. of Eng's, 1876. |
| Glenbrook, wharf, Lake Tahoe. | 39 05 | 119 56 | 1876.5 | —15.98 | +0.05 | —15.93 | Eng'r Officer. | Tab. Geo. Pos. U. S. Eng's, 1883. |
| Big Bend, Walker River. | 39 09 | 118 56 | 1859.6 | —16.43* | —0.22 | —16.65 | J. H. Simpson. | Stone's Mag. Var., 1878. |
| Sacramento District. | 39 10 | 114 23 | 1869.5 | —16.46 | +0.10 | —16.36 | G. W. Wheeler. | Rep. Ch. of Eng's, 1876. |
| Carson City. | 39 10 | 119 46 | 1876.5 | —16.78 | +0.05 | —16.73 | Eng'r Officer. | Tab. Geo. Pos. U. S. Eng's, 1883. |
| Monte Christo Mill. | 39 13 | 115 35 | 1869.5 | —17.08 | +0.10 | —16.98 | G. W. Wheeler and H. M. Robert. | Tab. Geo. Pos. U. S. Eng's, 1883. |
| Murray Creek. | 39 15 | 114 51 | 1869.5 | —16.59 | +0.10 | —16.49 | G. W. Wheeler and D. W. Lockwood. | Rep. Ch. of Eng's, 1876. |
| Near Hamilton. | 39 16 | 115 26 | 1869.5 | —16.72 | +0.10 | —16.62 | G. W. Wheeler and H. M. Robert. | Rep. Ch. of Eng's, 1876. |
| Center Station, American Flat. | 39 16 | 119 40 | 1876.5 | —16.50 | +0.05 | —16.45 | Eng'r Officer. | Tab. Geo. Pos. U. S. Eng's, 1883. |
| Carson Lake. | 39 24 | 118 30 | 1859.6 | —16.68* | —0.22 | —16.90 | J. H. Simpson. | Stone's Mag. Var., 1878. |
| Antelope Springs. | 39 26 | 115 27 | 1869.5 | —17.01 | +0.10 | —16.91 | G. W. Wheeler and D. W. Lockwood. | Rep. Ch. of Eng's, 1876. |
| Piermont. | 39 29 | 114 31 | 1872.5 | —16.78 | +0.13 | —16.65 | R. L. Hoxie. | Rep. Ch. of Eng's, 1876. |
| Patterson's Ranch. | 39 31 | 117 45 | 1876.5 | —16.46 | +0.15 | —16.31 | Eng'r Officer. | Tab. Geo. Pos. U. S. Eng's, 1883. |
| Ko-bah Valley. | 39 44 | 116 10 | 1858.9 | —16.23* | —0.13 | —16.36 | J. H. Simpson. | Stone's Mag. Var., 1878. |
| Antelope Valley. | 39 47 | 114 12 | 1859.5 | —16.28* | —0.12 | —16.40 | J. H. Simpson. | Stone's Mag. Var., 1878. |
| Slough, Long Valley. | 39 50 | 115 24 | 1869.5 | —17.00 | +0.20 | —16.80 | G. W. Wheeler and D. W. Lockwood. | Rep. Ch. of Eng's, 1876. |
| Eagan Cañon. | 39 52 | 114 58 | 1859.5 | —16.28* | —0.12 | —16.40 | J. H. Simpson. | Stone's Mag. Var., 1878. |
| Cho-Keep Pass. | 39 54 | 115 45 | 1858.9 | —16.53* | —0.02 | —16.55 | J. H. Simpson. | Stone's Mag. Var., 1878. |
| Huntingdon's Spring | 40 01 | 115 19 | 1859.5 | —17.60* | —0.12 | —17.72 | J. H. Simpson. | Stone's Mag. Var., 1878. |
| Camp Ruby. | 40 04 | 115 31 | 1869.5 | —17.15 | +0.20 | —16.95 | G. W. Wheeler and H. M. Robert. | Rep. Ch. of Eng's, 1876. |

*An index correction of +0°.50 has been applied to all of Captain Simpson's declinations.—[SCH.]

*Table of Observed Magnetic Declinations and Values reduced to the Year* 1890—Continued.

NEVADA—Continued.

| Name of station. | φ | λ | t | D | ΔD | $D_{1890.0}$ | Observer. | Reference. |
|---|---|---|---|---|---|---|---|---|
| | ° ′ | ° ′ | | ° | ° | ° | | |
| Cold Spring. | 40 04 | 115 42 | 1869.5 | −17.21 | +0.20 | −17.01 | G. W. Wheeler. | Rep. Ch. of Eng's, 1876. |
| Pearl Creek | 40 17 | 115 44 | 1869.5 | −16.31 | +0.20 | −16.11 | G. W. Wheeler and D.W. Lockwood. | Rep. Ch. of Eng's, 1876. |
| Willow Creek. | 40 31 | 115 44 | 1869.5 | −17.45 | +0.20 | −17.25 | G. W. Wheeler and D.W. Lockwood. | Rep. Ch. of Eng's, 1876. |
| Crescent Station. | 40 45 | 115 40 | 1869.5 | −17.87 | +0.20 | −17.67 | G. W. Wheeler. | Stone's Mag. Var., 1878. |
| Camp Halleck. | 40 49 | 115 20 | 1869.5 | −16.36 | +0.20 | −16.16 | G. W. Wheeler and H. M. Robert. | Rep. Ch. of Eng's, 1876. |

NEW HAMPSHIRE. Group 1.

| | | | | | | | | |
|---|---|---|---|---|---|---|---|---|
| Troy. | 42 50 | 72 11 | 1861.61 | + 9.06 | +2.39 | +11.45 | G. W. Dean, R. E. Halter (A. D. Bache). | C. and G. S. Rep., 1881, App. 9. |
| Chesterfield (S.V.S.). | 42 54 | 72 26 | 1874.76 | +10.44 | ------ | +11.96 | T. C. Hilgard. | C. and G. S. Rep., 1881, App. 9. |
| Isles of Shoals. | 42 59 | 70 37 | 1847.62 | +10.06 | +3.21 | +13.27 | T. J. Lee. | C. and G. S. Rep., 1881, App. 9. |
| Unkonoonuc. | 42 59 | 71 35 | 1848.77 | + 9.07 | +3.27 | +12.34 | J. S. Ruth. | C. and G. S. Rep., 1881, App. 9. |
| Patuccawa. | 43 07 | 71 12 | 1849.63 | +10.71 | +3.18 | +13.89 | C. O. Boutelle. | C. and G. S. Rep., 1881, App. 9. |
| Gunstock. | 43 31 | 71 22 | 1860.54 | +10.90 | +2.22 | +13.12 | G. W. Dean (A. D. Bache). | C. and G. S. Rep., 1881, App, 9. |
| Hanover, near observatory. | 43 42 | 72 17 | 1879.76 | +10.84 | ------ | +11.68 | J. B. Baylor. | C. and G. S. Rep., 1881, App. 9. |
| Hanover, ¾ mile W. of obs'y (S. V. S.). | 43 42 | 72 18 | 1879.76 | +11.64 | ------ | +12.48 | J. B. Baylor. | C. and G. S. Rep., 1881, App. 9. |
| Littleton. | 44 19 | 71 48 | 1873.74 | +12.58 | +1.20 | +13.78 | T. C. Hilgard. | C. and G. S. Rep., 1881, App. 9. |
| Gorham. | 44 22 | 71 15 | 1873.73 | +13.78 | +1.20 | +14.98 | T. C. Hilgard. | C. and G. S. Rep., 1881, App. 9. |

Group 2.

| | | | | | | | | |
|---|---|---|---|---|---|---|---|---|
| Hinsdale. | 42 46 | 72 17 | 1772.5 | + 6.00 | ------ | ------- | —— Wright. | Sill. Jour., Vol. 34, 1838. |
| Portsmouth, Boiling Rock (S. V. S.). | 43 05 | 70 45 | 1844.5 | + 9.78 | ------ | +13.29 | (Bound. Sur.). | Phil. Trans. Roy. Soc., 1872. |
| Concord. | 43 12 | 71 29 | 1879.5 | +11.45 | +0.70 | +12.15 | J. N. McClintock. | MS. in C. and G. S. Office. |
| Plymouth. | 43 45 | 71 42 | 1830.7 | + 8.53 | +4.62 | +13.15 | J. D. Graham. | Phil. Trans. Roy. Soc., 1849. |

*Table of Observed Magnetic Declinations and Values reduced to the Year* 1890—**Continued.**

NEW HAMPSHIRE—Continued.

| Name of station. | φ | λ | t | D | ΔD | $D_{1890.0}$ | Observer. | Reference. |
|---|---|---|---|---|---|---|---|---|
| | ° ′ | ° ′ | | ° | ° | ° | | |
| West Romney. | 43 49 | 71 53 | 1830.7 | + 9.63 | +4.62 | +14.25 | J. D. Graham. | Phil. Trans. Roy. Soc., 1849. |
| Warren. | 43 56 | 71 55 | 1830.7 | + 9.13 | +4.62 | +13.75 | J. D. Graham. | Phil. Trans. Roy. Soc., 1849. |
| Haverhill. | 44 02 | 72 05 | 1830.7 | + 7.53 | +4.62 | +12.15 | J. D. Graham. | Phil. Trans. Roy. Soc., 1849. |
| Lyman. | 44 13 | 71 54 | 1879.5 | +11.55 | +0.76 | +12.31 | J. N. McClintock. | MS. in C. and G. S. Office. |
| Fabyan Hotel. | 44 16 | 71 25 | 1845.47 | +11.53 | +3.21 | +14.74 | J. Locke. | Smith'n Cont's, Vol. III, 1852. |

NEW JERSEY. Group I.

| | | | | | | | | |
|---|---|---|---|---|---|---|---|---|
| Cape May Light. | 38 56 | 74 58 | 1874.48 | + 4.63 | +1.10 | + 5.73 | T. C. Hilgard. | C. and G. S. Rep., 1881, App. 9. |
| Townbank. | 38 59 | 74 58 | 1846.50 | + 2.98 | +3.14 | + 6.12 | J. Locke. | C. and G. S. Rep., 1881, App. 9. |
| Sea Isle City. | 39 09 | 74 42 | 1884.45 | + 5.90 | +0.38 | + 6.28 | J. B. Baylor. | MS. in C. and G. S. Office. |
| Egg Island Light. | 39 10 | 75 08 | 1846.48 | + 3.05 | +3.14 | + 6.19 | J. Locke. | C. and G. S. Rep., 1881, App. 9. |
| Port Norris. | 39 15 | 75 01 | 1846.48 | + 3.07 | +3.14 | + 6.21 | J. Locke. | C. and G. S. Rep., 1881, App. 9. |
| Atlantic City, near Light House. | 39 22 | 74 25 | 1860.64 | + 4.90 | +2.12 | + 7.02 | C. A. Schott. | C. and G. S. Rep., 1881, App. 9. |
| Pine Mount. | 39 25 | 75 20 | 1846.46 | + 3.24 | +3.12 | + 6.36 | J. Locke. | C. and G. S. Rep., 1881, App. 9. |
| Hawkins. | 39 26 | 75 17 | 1846.47 | + 2.98 | +3.12 | + 6.10 | J. Locke. | C. and G. S. Rep., 1881, App. 9. |
| Old Inlet, Tucker's Island. | 39 31 | 74 17 | 1846.86 | + 4.46 | +3.07 | + 7.53 | T. J. Lee. | C. and G. S. Rep., 1881, App. 9. |
| Long Beach. | 39 32 | 74 16 | 1860.65 | + 5.31 | +2.12 | + 7.43 | C. A. Schott. | C. and G. S. Rep., 1881, App. 9. |
| Church Landing. | 39 41 | 75 31 | 1846.43 | + 5.82 | +3.12 | + 8.94 | J. Locke. | C. and G. S. Rep., 1881, App. 9. |
| Barnegat Light. | 39 46 | 74 06 | 1860.65 | + 5.40 | +2.12 | + 7.52 | C. A. Schott. | C. and G. S. Rep., 1881, App. 9. |
| Chew. | 39 48 | 75 10 | 1846.53 | + 3.75 | +3.12 | + 6.87 | J. Locke. | C. and G. S. Rep., 1881, App. 9. |
| White Hill. | 40 08 | 74 44 | 1846.38 | + 4.43 | +3.08 | + 7.51 | J. Locke. | C. and G. S. Rep., 1881, App. 9. |
| Mount Rose. | 40 22 | 74 43 | 1852.62 | + 5.53 | +2.56 | + 8.09 | J. E. Hilgard. | C. and G. S. Rep., 1881, App. 9. |
| Mount Mitchell. | 40 24 | 74 00 | 1844.04 | + 5.66 | +2.60 | + 8.26 | G. M. Bache and J. Hall. | C. and G. S. Rep., 1881, App. 9. |

*Table of Observed Magnetic Declinations and Values reduced to the Year* 1890—Continued.

NEW JERSEY—Continued.

| Name of station. | φ | λ | t | D | ΔD | $D_{1890.0}$ | Observer. | Reference. |
|---|---|---|---|---|---|---|---|---|
| | ° ′ | ° ′ | | ° | ° | ° | | |
| Sandy Hook. | 40 28 | 74 00 | 1885.75 | + 7.88 | +0.17 | + 8.05 | J. B. Baylor. | MS. in C. and G. S. Office. |
| Newark. | 40 45 | 74 10 | 1846.37 | + 5.58 | +2.43 | + 8.01 | J. Locke. | C. and G. S. Rep., 1881, App. 9. |
| Bergen Neck. | 40 46 | 74 03 | 1840.66 | + 5.88 | +2.83 | + 8.71 | S. C. Rowan (?) (F. R. Hassler). | C. and G. S. Rep., 1881, App. 9. |
| | | | | | | | | Group 2. |
| Cape May, vicinity of Cape May City and Light. | 38 56 | 74 57 | 1887.8 | + 5.18 | +0.14 | + 5.32 | ---------- | Mag. Sur. N. J., Cook, Geologist, 1888. |
| Ocean View. | 39 11 | 74 44 | 1887.8 | + 5.67 | +0.14 | + 5.81 | ---------- | Mag. Sur. N. J., Cook, Geologist, 1888. |
| Maurice River Lt., near Port Norris. | 39 12 | 75 02 | 1883.5 | + 5.08 | +0.44 | + 5.52 | ---------- | Mag. Sur. N. J., Cook, Geologist, 1888. |
| Port Norris. | 39 15 | 75 02 | 1887.8 | + 5.40 | +0.14 | + 5.54 | ---------- | Mag. Sur. N. J., Cook, Geologist, 1888. |
| Atlantic City, near Lt. | 39 22 | 74 25 | 1887.8 | + 6.37 | +0.14 | + 6.51 | ---------- | Mag. Sur. N. J., Cook, Geologist, 1888. |
| Bridgeton, average. | 39 26 | 75 14 | 1887.8 | + 5.32 | +0.14 | + 5.46 | ---------- | Mag. Sur. N. J., Cook, Geologist, 1888. |
| May's Landing, average. | 39 27 | 74 44 | 1887.8 | + 5.87 | +0.14 | + 6.01 | ---------- | Mag. Sur. N. J., Cook, Geologist, 1888. |
| Newfield. | 39 32 | 75 01 | 1887.8 | + 5.75 | +0.14 | + 5.89 | ---------- | Mag. Sur. N. J., Cook, Geologist, 1888. |
| Bass River. | 39 35 | 74 27 | 1885.6 | + 6.50 | +0.30 | + 6.80 | H. S. Haines. | Mag. Sur. N. J., Cook, Geologist, 1888. |
| Salem. | 39 35 | 75 28 | 1887.8 | + 5.70 | +0.14 | + 5.84 | ---------- | Mag. Sur. N. J., Cook, Geologist, 1888. |
| Tuckerton, vicinity of village. | 39 36 | 74 20 | 1887.9 | + 6.87 | +0.14 | + 7.01 | ---------- | Mag. Sur. N. J., Cook, Geologist, 1888. |
| West Creek. | 39 38 | 74 19 | 1745.5 | + 5.42 | ------ | ------ | Dennis. | Mag. Sur. N. J., Cook, Geologist, 1888. |
| Hammonton. | 39 39 | 74 49 | 1885.9 | + 5.88 | +0.30 | + 6.18 | ---------- | Mag. Sur. N. J., Cook, Geologist, 1888. |

*Table of Observed Magnetic Declinations and Values reduced to the Year* 1890—**Continued.**

NEW JERSEY—Continued.

| Name of station. | φ | λ | t | D | ΔD | $D_{1890.0}$ | Observer. | Reference. |
|---|---|---|---|---|---|---|---|---|
| | ° ′ | ° ′ | | ° | ° | ° | | |
| Clarksboro. | 39 39 | 75 06 | 1885.9 | + 5.77 | +0.30 | + 6.07 | ---------- | Mag. Sur. N. J., Cook, Geologist, 1888. |
| Winslow. | 39 40 | 74 51 | 1887.8 | + 5.95 | +0.14 | + 6.09 | ---------- | Mag. Sur. N. J., Cook, Geologist, 1888. |
| Waterford. | 39 43 | 74 51 | 1885.9 | + 5.82 | +0.30 | + 6.12 | ---------- | Mag. Sur. N. J., Cook, Geologist, 1888. |
| Barnegat, village. | 39 45 | 74 14 | 1887.9 | + 6.87 | +0.14 | + 7.01 | ---------- | Mag. Sur. N. J., Cook, Geologist, 1888. |
| Barnegat, light. | 39 46 | 74 06 | 1880.5 | + 6.95 | +0.70 | + 7.65 | A. P. Irons. | Mag. Sur. N. J., Cook, Geologist, 1888. |
| Shamong station. | 39 49 | 74 32 | 1887.9 | + 6.60 | +0.14 | + 6.74 | ---------- | Mag. Sur. N. J., Cook, Geologist, 1888. |
| Berlin. | 39 49 | 74 55 | 1885.9 | + 5.58 | +0.30 | + 5.88 | ---------- | Mag. Sur. N. J., Cook, Geologist, 1888. |
| Forked River. | 39 50 | 74 18 | 1876.5 | + 6.05 | +0.96 | + 7.01 | C. J. Moore. | MS. of C. J. Moore. |
| Woodbury. | 39 51 | 75 10 | 1887.8 | + 6.03 | +0.14 | + 6.17 | ---------- | Mag. Sur. N. J., Cook, Geologist, 1888. |
| Haddonfield. | 39 53 | 75 02 | 1887.8 | + 6.17 | +0.14 | + 6.31 | ---------- | Mag. Sur. N. J., Cook, Geologist, 1888. |
| Seaside Park. | 39 55 | 74 05 | 1887.9 | + 6.93 | +0.14 | + 7.07 | ---------- | Mag. Sur. N. J., Cook, Geologist, 1888. |
| Camden. | 39 56 | 75 06 | 1887.8 | + 6.17 | +0.14 | + 6.31 | ---------- | Mag. Sur. N. J., Cook, Geologist, 1888. |
| Whitings. | 39 57 | 74 23 | 1887.9 | + 7.15 | +0.14 | + 7.29 | ---------- | Mag. Sur. N. J., Cook, Geologist, 1888. |
| Brown's Mills. | 39 58 | 74 35 | 1885.8 | + 6.88 | +0.30 | + 7.18 | ---------- | Mag. Sur. N. J., Cook, Geologist, 1888. |
| Smithville. | 39 59 | 74 45 | 1885.8 | + 6.53 | +0.30 | + 6.83 | ---------- | Mag. Sur. N. J., Cook, Geologist, 1888. |
| Mount Holly, average. | 40 00 | 74 47 | 1887.9 | + 6.47 | +0.14 | + 6.61 | ---------- | Mag. Sur. N. J., Cook, Geologist, 1888. |

*Table of Observed Magnetic Declinations and Values reduced to the Year* 1890—Continued.

NEW JERSEY—Continued.

| Name of station. | $\varphi$ | $\lambda$ | $t$ | D | $\Delta$D | $D_{1890.0}$ | Observer. | Reference. |
|---|---|---|---|---|---|---|---|---|
| | ° ′ | ° ′ | | ° | ° | ° | | |
| New Egypt. | 40 04 | 74 32 | 1887.9 | + 6.93 | +0.14 | + 7.07 | ---------- | Mag. Sur. N. J., Cook, Geologist, 1888. |
| Columbus. | 40 04 | 74 42 | 1885.8 | + 7.25 | +0.30 | + 7.55 | ---------- | Mag. Sur. N. J., Cook, Geologist, 1888. |
| Ellisdale. | 40 07 | 74 35 | 1885.8 | + 6.75 | +0.30 | + 7.05 | ---------- | Mag. Sur. N. J., Cook, Geologist, 1888. |
| Sea Girt. | 40 08 | 74 03 | 1887.9 | + 7.15 | +0.14 | + 7.29 | ---------- | Mag. Sur. N. J., Cook, Geologist, 1888. |
| Bordentown. | 40 09 | 74 43 | 1885.8 | + 7.05 | +0 30 | + 7.35 | ---------- | Mag. Sur. N. J., Cook, Geologist, 1888. |
| Imlaystown. | 40 10 | 74 31 | 1765.8 | + 4.75 | +3.26 | + 8.01 | ---------- | Mag. Sur. N. J., Cook, Geologist, 1888. |
| Trenton. | 40 13 | 74 44 | 1887.8 | + 7.22 | +0.14 | + 7.36 | ---------- | Mag. Sur. N. J., Cook, Geologist, 1888. |
| Hamilton. | 40 14 | 74 40 | 1885.8 | + 6.97 | +0.30 | + 7.27 | ---------- | Mag. Sur. N. J., Cook, Geologist, 1888. |
| Freehold. | 40 16 | 74 16 | 1887.9 | + 7.25 | +0.14 | + 7.39 | ---------- | Mag. Sur. N. J., Cook, Geologist, 1888. |
| Hightstown. | 40 16 | 74 32 | 1887.8 | + 7.30 | +0.14 | + 7.44 | ---------- | Mag. Sur. N. J., Cook, Geologist, 1888. |
| Red Bank. | 40 20 | 74 04 | 1887.9 | + 7.38 | +0.14 | + 7.52 | ---------- | Mag. Sur. N. J., Cook, Geologist, 1888. |
| Jamesburg (S.V.S.). | 40 21 | 74 27 | 1887.5 | + 7.42 | ------ | + 7.65 | H. M. Thomas. | Mag. Sur. N. J., Cook, Geologist, 1888. |
| Princeton. | 40 21 | 74 40 | 1887.9 | + 7.25 | +0.14 | + 7.39 | ---------- | Mag. Sur. N. J., Cook, Geologist, 1888. |
| Seabright. | 40 22 | 73 59 | 1884.7 | + 7.20 | +0.32 | + 7.52 | G. H. Blakely | Mag. Sur. N. J., Cook, Geologist, 1888. |
| Lambertville. | 40 22 | 74 56 | 1887.9 | + 7.05* | +0.14 | + 7.19 | ---------- | Mag. Sur. N. J., Cook, Geologist, 1888. |

* Mean of two determinations.

*Table of Observed Magnetic Declinations and Values reduced to the Year* 1890—Continued.

NEW JERSEY—Continued.

| Name of station. | φ | λ | t | D | ΔD | $D_{1890.0}$ | Observer. | Reference. |
|---|---|---|---|---|---|---|---|---|
| | ° ′ | ° ′ | | ° | ° | ° | | |
| Morganville. | 40 23 | 74 14 | 1887.9 | + 7.58 | +0.13 | + 7.71 | ---------- | Mag. Sur. N. J., Cook, Geologist, 1888. |
| Blawenburgh. | 40 25 | 74 43 | 1887.9 | + 7.60 | +0.14 | + 7.74 | ---------- | Mag. Sur. N. J., Cook, Geologist, 1888. |
| New Brunswick (S. V. S.). | 40 29 | 74 27 | 1887.8 | + 7.57 | ------ | + 7.55 | ---------- | Mag. Sur. N. J., Cook, Geologist, 1888. |
| Perth Amboy. | 40 30 | 74 16 | 1885.5 | + 7.72 | +0.18 | + 7.90 | G. H. Blakely. | Mag. Sur. N. J., Cook, Geologist, 1888. |
| Middlebush. | 40 30 | 74 32 | 1884.9 | + 7.22 | +0.20 | + 7.42 | G. H. Blakely. | Mag. Sur. N. J., Cook, Geologist, 1888. |
| Flemington. | 40 31 | 74 51 | 1887.9 | + 7.23 | +0.13 | + 7.36 | ---------- | Mag. Sur. N. J., Cook, Geologist, 1888. |
| Frenchtown. | 40 32 | 75 04 | 1887.9 | + 7.17* | +0.17 | + 7.34 | ---------- | Mag. Sur. N. J., Cook, Geologist, 1888. |
| Cushetunk. | 40 36 | 74 49 | 1883.8 | + 7.48 | +0.38 | + 7.86 | ---------- | Mag. Sur. N. J., Cook, Geologist, 1888. |
| Somerville. | 40 37 | 74 34 | 1887.9 | + 7.33* | +0.10 | + 7.43 | ---------- | Mag. Sur. N. J., Cook, Geologist, 1888. |
| Plainfield, two crest stations. | 40 38 | 74 27 | 1887.9 | + 8.00 | +0.13 | + 8.13 | ---------- | Mag. Sur. N. J., Cook, Geologist, 1888. |
| Pattenburg. | 40 38 | 75 01 | 1887.8 | + 6.88 | +0.15 | + 7.03 | ---------- | Mag. Sur. N. J., Cook, Geologist, 1888. |
| Lebanon. | 40 39 | 74 49 | 1887.8 | + 7.81* | +0.13 | + 7.94 | ---------- | Mag. Sur. N. J., Cook, Geologist, 1888. |
| Valley Station. | 40 40 | 75 02 | 1887.8 | + 6.75† | +0.15 | + 6.90 | ---------- | Mag. Sur. N. J., Cook, Geologist, 1888. |
| Gillette. | 40 41 | 74 28 | 1887.9 | + 7.89 | +0.13 | + 8.02 | ---------- | Mag. Sur. N. J., Cook, Geologist, 1888. |
| Glen Gardner and High Bridge. | 40 42 | 74 56 | 1887.8 | + 7.64* | +0.13 | + 7.77 | ---------- | Mag. Sur. N. J., Cook, Geologist, 1888. |

* Mean of two determinations. † Mean of three determinations.

*Table of Observed Magnetic Declinations and Values reduced to the Year* 1890—Continued.

NEW JERSEY—Continued.

| Name of station. | φ | λ | t | D | ΔD | $D_{1890.0}$ | Observer. | Reference. |
|---|---|---|---|---|---|---|---|---|
| | ° ′ | ° ′ | | ° | ° | ° | | |
| Phillipsburg. | 40 42 | 75 10 | 1887.8 | + 6.17 | +0.13 | + 6.30 | ---------- | Mag. Sur. N. J., Cook, Geologist, 1888. |
| Jersey City. | 40 43 | 74 04 | 1871.4 | + 7.92 | +1.02 | + 8.94 | D. E. Culver. | Mag. Sur. N. J., Cook, Geologist, 1888. |
| Pottersville. | 40 43 | 74 44 | 1883.8 | + 7.77 | +0.38 | + 8.15 | ---------- | Mag. Sur. N. J., Cook, Geologist, 1888. |
| Newark and Harrison. | 40 45 | 74 09 | 1887.8 | + 7.70* | +0.13 | + 7.83 | ---------- | Mag. Sur. N. J., Cook, Geologist, 1888. |
| West Hoboken. | 40 46 | 74 02 | 1887.8 | + 9.14‡ | +0.13 | + 9.27 | ---------- | Mag. Sur. N. J., Cook, Geologist, 1888. |
| Orange. | 40 46 | 74 15 | 1887.9 | + 8.05† | +0.13 | + 8.18 | ---------- | Mag. Sur. N. J., Cook, Geologist, 1888. |
| Secaucus. | 40 47 | 74 03 | 1887.8 | + 8.75 | +0.13 | + 8.88 | ---------- | Mag. Sur. N. J., Cook, Geologist, 1888. |
| Morristown. | 40 47 | 74 29 | 1887.9 | + 8.58† | +0.13 | + 8.71 | ---------- | Mag. Sur. N. J., Cook, Geologist, 1888. |
| Chester. | 40 47 | 74 42 | 1887.8 | + 7.93 | +0.13 | + 8.06 | ---------- | Mag. Sur. N. J., Cook, Geologist, 1888. |
| Cook's Bridge and Hanover. | 40 48 | 74 22 | 1887.9 | + 8.02* | +0.13 | + 8.15 | ---------- | Mag Sur. N. J., Cook, Geologist, 1888. |
| Livingston. | 40 48 | 74 19 | 1887.9 | + 8.17 | +0.13 | + 8.30 | ---------- | Mag. Sur. N. J., Cook, Geologist, 1888. |
| Bartley, top of ridge. | 40 49 | 74 41 | 1887.8 | + 8.48 | +0.13 | + 8.61 | ---------- | Mag. Sur. N. J., Cook, Geologist, 1888. |
| Schooley Mountain. | 40 50 | 74 48 | 1887.8 | + 6.42 | +0.13 | + 6.55 | ---------- | Mag. Sur. N. J., Cook, Geologist, 1888. |
| Belvedere. | 40 50 | 75 05 | 1887.8 | + 5.53 | +0.13 | + 5.66 | ---------- | Mag. Sur. N. J., Cook, Geologist, 1888. |
| Hackettstown. | 40 51 | 74 50 | 1887.8 | + 6.76† | +0.13 | + 6.89 | ---------- | Mag. Sur. N. J., Cook, Geologist, 1888. |

* Mean of two determinations. † Mean of three determinations. ‡ Mean of several determinations.

*Table of Observed Magnetic Declinations and Values reduced to the Year* 1890—Continued.

NEW JERSEY—Continued.

| Name of station. | φ | λ | t | D | ΔD | $D_{1890.0}$ | Observer. | Reference. |
|---|---|---|---|---|---|---|---|---|
| | ° ′ | ° ′ | | ° | ° | ° | | |
| Budd's Lake. | 40 52 | 74 43 | 1880.0 | + 6.70 | +0.51 | + 7.21 | ---------- | Mag. Sur. N. J., Cook, Geologist, 1888. |
| Linwood, average, top of Palisades. | 40 53(?) | 73 57(?) | 1887.8 | + 9.05 | +0.13 | + 9.18 | ---------- | Mag. Sur. N. J., Cook, Geologist, 1888. |
| Teaneck. | 40 53 | 74 01 | 1887.8 | + 8.15 | +0.13 | + 8.28 | ---------- | Mag. Sur. N. J., Cook, Geologist, 1888. |
| Hackensack. | 40 53 | 74 02 | 1887.8 | + 7.82 | +0.13 | + 7.95 | ---------- | Mag. Sur. N. J., Cook, Geologist, 1888. |
| Paterson. | 40 53 | 74 10 | 1868.8 | + 6.62* | +1.12 | + 7.74 | A. A. Fonda and T. Ryerson. | Mag. Sur. N. J., Cook, Geologist, 1888. |
| Dover. | 40 53 | 74 34 | 1887.8 | + 8.65* | +0.13 | + 8.78 | ---------- | Mag. Sur. N. J., Cook, Geologist, 1888. |
| Englewood, near Nordhoff. | 40 54 | 73 58 | 1887.8 | + 8.48 | +0.13 | + 8.61 | ---------- | Mag. Sur. N. J., Cook, Geologist, 1888. |
| Boonton. | 40 54 | 74 24 | 1887.9 | + 8.27 | +0.13 | + 8.40 | ---------- | Mag. Sur. N. J., Cook, Geologist, 1888. |
| Warrenville. | 40 54 | 74 50 | 1881.7 | + 6.00 | +0.50 | + 6.50 | ---------- | Mag. Sur. N. J., Cook, Geologist, 1888. |
| Lake Hopatcong, Bertrand and Shippenport. | 40 55 | 74 40 | 1884.8 | + 8.34* | +0.26 | + 8.60 | G. H. Blakely. | Mag. Sur. N. J., Cook, Geologist, 1888. |
| Allamuchy, W. side of village. | 40 55 | 74 49 | 1887.8 | + 8.30 | +0.13 | + 8.43 | ---------- | Mag. Sur. N. J., Cook, Geologist, 1888. |
| Fairlawn and N. of Hawthore Station. | 40 57 | 74 08 | 1887.8 | + 7.98* | +0.13 | + 8.11 | ---------- | Mag. Sur. N. J., Cook, Geologist, 1888. |
| High Mountain, trap ridge. | 40 58 | 74 12 | 1883.6 | + 9.05 | +0.38 | + 9.43 | A. A. Titsworth. | Mag. Sur. N. J., Cook, Geologist, 1888. |
| Lake Hopatcong. | 40 58 | 74 38 | 1887.8 | + 8.20* | +0.13 | + 8.33 | ---------- | Mag. Sur. N. J., Cook, Geologist, 1888. |
| Prompton. | 40 59 | 74 19 | 1887.8 | + 9.27* | +0.13 | + 9.40 | ---------- | Mag. Sur. N. J., Cook, Geologist, 1888. |

* Mean of two values.

*Table of Observed Magnetic Declinations and Values reduced to the Year* 1890—Continued.

NEW JERSEY—Continued.

| Name of station. | $\varphi$ | $\lambda$ | $t$ | D | $\Delta$D | $D_{1890.0}$ | Observer. | Reference. |
|---|---|---|---|---|---|---|---|---|
| | ° ′ | ° ′ | | ° | ° | ° | | |
| Andover. | 40 59 | 74 44 | 1881.7 | + 6.42 | +0.50 | + 6.92 | ---------- | Mag. Sur. N. J., Cook, Geologist, 1888. |
| Blairstown. | 40 59 | 74 58 | 1887.8 | + 7.42 | +0.13 | + 7.55 | ---------- | Mag. Sur. N. J., Cook, Geologist, 1888. |
| Bearfort Mountain. | 41 01 | 74 24 | 1882.6 | + 8.00 | +0.44 | + 8.44 | ---------- | Mag. Sur. N. J., Cook, Geologist, 1888. |
| Hardwick. | 41 01 | 74 56 | 1886.3 | + 7.18 | +0.23 | + 7.41 | A. H. Konkle. | Mag. Sur. N. J., Cook, Geologist, 1888. |
| Newfoundland at three stations, Green Pond and Oak Ridge. | 41 03 | 74 28 | 1887.8 | + 7.81 | +0.13 | + 7.94 | H. Chamberlain. | Mag. Sur. N. J., Cook, Geologist, 1888. |
| Newton. | 41 03 | 74 45 | 1887.9 | + 7.28 | +0.13 | + 7.41 | A. H. Konkle. | Mag. Sur. N. J., Cook, Geologist, 1888. |
| Darlington. | 41 05 | 74 13 | 1879.6 | + 9.67 | +0.61 | +10.28 | ---------- | Mag. Sur. N. J., Cook, Geologist, 1888. |
| Franklin Furnace. | 41 06 | 74 33 | 1887.8 | + 7.37‡ | +0.13 | + 7.50 | ---------- | Mag. Sur. N. J., Cook, Geologist, 1888. |
| Mahwah. | 41 07 | 74 10 | 1887.8 | + 8.52* | +0.13 | + 8.65 | ---------- | Mag. Sur. N. J., Cook, Geologist, 1888. |
| Monroe. | 41 07 | 74 38 | 1887.8 | + 7.05 | +0.13 | + 7.18 | ---------- | Mag. Sur. N. J., Cook, Geologist, 1888. |
| Hamburg. | 41 08 | 74 35 | 1882.8 | + 7.07 | +0.43 | + 7.50 | ---------- | Mag. Sur. N. J., Cook, Geologist, 1888. |
| Greenwood. | 41 09 | 74 22 | 1887.8 | + 8.10† | +0.13 | + 8.23 | ---------- | Mag. Sur. N. J., Cook, Geologist, 1888. |
| Culver's Gap. | 41 11 | 74 47 | 1887.8 | + 7.41† | +0.13 | + 7.54 | ---------- | Mag. Sur. N. J., Cook, Geologist, 1888. |
| State Line. | 41 12 | 74 21 | 1874.6 | + 6.63* | +0.87 | + 7.50 | ---------- | Mag. Sur. N. J., Cook, Geologist, 1888. |

* Mean of two values. † Mean of three values. ‡ Mean of several values.

*Table of Observed Magnetic Declinations and Values reduced to the Year* 1890—Continued.

NEW JERSEY—Continued.

| Name of station. | φ | λ | t | D | ΔD | $D_{1890.0}$ | Observer. | Reference. |
|---|---|---|---|---|---|---|---|---|
| | ° ′ | ° ′ | | ° | ° | ° | | |
| Vernon. | 41 12 | 74 30 | 1887.8 | + 6.69† | +0.13 | + 6.82 | ---------- | Mag. Sur. of N. J., Cook, Geologist, 1888. |
| Near Wawayanda Mines. | 41 13 | 74 24 | 1874.6 | + 5.15 | +0.87 | + 6.02 | E. A. Bowser. | Mag. Sur. of N. J., Cook, Geologist, 1888. |
| Deckertown. | 41 13 | 74 36 | 1887.8 | + 7.48 | +0.13 | + 7.61 | ---------- | Mag. Sur. of N. J., Cook, Geologist, 1888. |
| Layton. | 41 13 | 74 50 | 1887.8 | + 7.30* | +0.13 | + 7.43 | ---------- | Mag. Sur. of N. J., Cook, Geologist, 1888. |
| Mount Salem. | 41 19 | 74 37 | 1887.8 | + 7.65 | +0.13 | + 7.78 | ---------- | Mag. Sur. of N. J., Cook, Geologist, 1888. |
| High Point. | 41 19 | 74 40 | 1887.8 | + 7.83 | +0.13 | + 7.96 | ---------- | Mag. Sur. of N. J., Cook, Geologist, 1888. |
| Montague. | 41 19 | 74 48 | 1887.8 | + 7.22 | +0.13 | + 7.35 | ---------- | Mag. Sur. of N. J., Cook, Geologist, 1888. |
| Carpenter's Point. | 41 21 | 74 41 | 1884.8 | + 7.85 | +0.32 | + 8.17 | ---------- | Mag. Sur. of N. J., Cook, Geologist, 1888. |
| Tri-State Rock. | 41 21 | 74 42 | 1887.8 | + 7.83 | +0.13 | + 7.96 | ---------- | Mag. Sur. of N. J., Cook, Geologist, 1888. |

* Mean of two values. † Mean of three values.

N. B.—The latitudes and longitudes of the stations of the State Geological Survey were sup plied at the Coast and Geodetic Survey Office, chiefly from Cook's Atlas.

NEW MEXICO TERRITORY. Group I.

| | | | | | | | | |
|---|---|---|---|---|---|---|---|---|
| Santa Fé, Fort Marcy. | 35 41 | 105 57 | 1886.39 | —12.92 | +0.06 | —12.86 | E. Smith. | MS. in C. and G. S. Office. |
| Deming. | 32 17 | 107 50 | 1888.90 | —12.77 | +0.04 | —12.73 | J. B. Baylor. | MS. in C. and G. S. Office. |
| Fort Craig. | 33 38 | 107 01 | 1888.89 | —12.43 | +0.04 | —12.39 | J. B. Baylor. | MS. in C. and G. S. Office. |
| Albuquerque. | 35 04 | 106 39 | 1888.88 | —13.17 | +0.05 | —13.12 | J. B. Baylor. | MS. in C. and G. S. Office. |
| Fort Union. | 35 54 | 105 01 | 1888.87 | —13.42 | +0.10 | —13.32 | J. B. Baylor. | MS. in C. and G. S. Office. |

*Table of Observed Magnetic Declinations and Values reduced to the Year* 1890—Continued.

NEW MEXICO TERRITORY—Continued.

Group 2.

| Name of station. | φ | λ | t | D | ΔD | $D_{1890.0}$ | Observer. | Reference. |
|---|---|---|---|---|---|---|---|---|
| | ° ′ | ° ′ | | ° | ° | ° | | |
| San Luis Springs. | 31 20 | 108 48 | 1855.3 | −11.75 | +0.51 | −11.24 | W. H. Emory. | Am. Acad. Sc., Vol. VI, 1856. |
| Agua del Perro. | 31 21 | 108 20 | 1855.3 | −11.97 | +0.51 | −11.46 | W. H. Emory. | Am. Acad. Sc., Vol. VI, 1856. |
| Intersection point, boundary. | 31 46 | 106 50 | 1855.7 | −11.67 | +0.51 | −11.16 | W. H. Emory. (?) | From a chart. |
| Initial point of boundary, near El Paso del Norte. | 31 47 | 106 28 | 1855.1 | −11.92 | +0.50 | −11.42 | W. H. Emory. | Am. Acad. Sc., Vol. VI, 1856. |
| Carrizalillo. | 31 51 | 107 56 | 1855.2 | −12.03 | +0.50 | −11.53 | W. H. Emory. | Am. Acad. Sc., Vol. VI, 1856. |
| Doña Aña. | 32 22 | 106 45 | 1851.5 | −12.12 | +0.43 | −11.69 | W. H. Emory. | Am. Acad. Sc., Vol. VI., 1856. |
| Fort Cummings. | 32 27 | 107 40 | 1873.5 | −12.50 | +0.48 | −12.02 | S. E. Tillman. | Rep. Ch. of Eng's, 1879. |
| Fort Selden. | 32 29 | 106 55 | 1870.41 | −12.65 | +0.53 | −12.12 | ---------- | Map of Reservation. |
| Hudson's Hot Spring, Mimbres. | 32 33 | 108 00 | 1878.5 | −12.50 | +0.38 | −12.12 | (Eng'r Officer). | Geo. Pos. U.S. Eng's, Wash., 1885. |
| Apache Tejo. | 32 38 | 108 08 | 1878.5 | −12.70 | +0.38 | −12.32 | (Eng'r Officer). | Geo. Pos. U.S. Eng's, Wash., 1885. |
| Copper Mines. | 32 48 | 108 04 | 1851.5 | −11.37 | +0.43 | −10.94 | W. H. Emory. | Am. Acad. Sc, Vol. VI, 1856. |
| Fort Bayard, astr'l monument. | 32 48 | 108 09 | 1878.5 | −12.93 | +0.38 | −12.55 | (Eng'r Officer). | Rep. Ch. of Eng's, 1879. |
| San Francisco River. | 33 12 | 108 52 | 1873.5 | −13.52 | +0.48 | −13.04 | R. L. Hoxie. | Rep. Ch. of Eng's, 1876. |
| Water Hole. | 33 13 | 108 46 | 1873.5 | −13.50 | +0.48 | −13.02 | R. L. Hoxie. | Rep. Ch. of Eng's, 1876. |
| San Francisco River. | 33 15 | 108 52 | 1873.5 | −12.86 | +0.48 | −12.38 | R. L. Hoxie. | Rep. Ch. of Eng's, 1876. |
| San Francisco River. | 33 26 | 108 55 | 1873.5 | −13.82 | +0.48 | −13.34 | R. L. Hoxie. | Rep. Ch. of Eng's, 1876. |
| Fort Stanton, flagstaff. | 33 30 | 105 32 | 1878.5 | −12.40 | +0.38 | −12.02 | (Eng'r Officer). | Rep. Ch. of Eng's, 1879. |
| Tulerosa Fort. | 33 53 | 108 30 | 1873.5 | −13.30 | +0.48 | −12.82 | R. L. Hoxie. | Rep. Ch. of Eng's, 1876. |
| Oak Spring. | 34 03 | 108 55 | 1873.5 | −12.58 | +0.48 | −12.10 | R. L. Hoxie. | Rep. Ch. of Eng's, 1876. |
| Initial point of New Mex. Meridian. | 34 17 | 106 50 | 1855.3 | −12.75 | +0.51 | −12.24 | ---------- | From a map. |
| Fort Sumner. | 34 25 | 104 08 | 1866.1 | −13.75 | +0.57 | −13.18 | —— Shinn. | From a map. |
| Estancia Ranch and Spring. | 34 45 | 106 04 | 1876.5 | −12.72 | +0.44 | −12.28 | (Eng'r Officer). | Geo. Pos. U.S. Eng's, Wash., 1885. |
| Antelope Spring. | 34 50 | 106 04 | 1875.5 | −13.43 | +0.46 | −12.97 | (Eng'r Officer). | Geo. Pos. U.S. Eng's, Wash., 1885. |
| Isleta. | 34 54 | 106 40 | 1853.85 | −13.22 | +0.48 | −12.74 | J. C. Ives. | C. S. Rep., 1856. |

*Table of Observed Magnetic Declinations and Values reduced to the Year* 1890—**Continued.**

NEW MEXICO TERRITORY—Continued.

| Name of station. | φ | λ | t | D | ΔD | $D_{1890.0}$ | Observer. | Reference. |
|---|---|---|---|---|---|---|---|---|
| | ° ′ | ° ′ | | ° | ° | ° | | |
| Topographical Camp, near Ojo Caliente. | 34 57 | 109 00 | 1873.5 | −13.97 | +0.48 | −13.49 | R. L. Hoxie. | Rep. Ch. of Eng's, 1876. |
| Rio San José. | 35 01 | 107 14 | 1853.86 | −13.77 | +0.48 | −13.29 | J. C. Ives. | C. S. Rep., 1856. |
| Cedar Forest. | 35 01 | 108 55 | 1853.90 | −13.02 | +0.48 | −12.54 | J. C. Ives. | C. S. Rep., 1856. |
| Agua Fria. | 35 02 | 107 58 | 1853.88 | −13.42 | +0.48 | −12.94 | J. C. Ives. | C. S. Rep., 1856. |
| Inscription Rock. | 35 03 | 108 14 | 1853.88 | −12.95 | +0.48 | −12.47 | J. C. Ives. | C. S. Rep., 1856. |
| Covero. | 35 05 | 107 26 | 1853.87 | −13.82 | +0.48 | −13.34 | J. C. Ives. | C. S. Rep., 1856. |
| Hay Camp. | 35 05 | 107 39 | 1853.87 | −13.93(?) | +0.48 | −13.45(?) | J. C. Ives. | C. S. Rep., 1856. |
| Albuquerque, flag-staff, plaza. | 35 06 | 106 41 | 1876.5 | −13.75 | +0.44 | −13.31 | (Eng'r Officer). | Geo. Pos. U.S. Eng's, Wash., 1885. |
| Zuni River. | 35 06 | 108 39 | 1853.89 | −13.40 | +0.48 | −12.92 | J. C. Ives. | C. S. Rep., 1856. |
| Nutria Springs. | 35 18 | 108 33 | 1873.5 | −14.27 | +0.48 | −13.79 | R. L. Hoxie. | Rep. Ch. of Eng's, 1876. |
| Fort Bascom. | 35 24 | 103 50 | 1856.5 | −12.83 | +0.52 | −12.31 | ---------- | From a map. |
| Fort Wingate (new), flag-staff. | 35 29 | 108 32 | 1873.5 | −14.86 | +0.48 | −14.38 | R. L. Hoxie and L. Nell. | Rep. Ch. of Eng's, 1879. |
| Magnetic Station. | 35 40 | 106 50 | 1855.5 | −13.67 | +0.51 | −13.16 | ---------- | From a map. |
| Mora River. | 35 59 | 105 19 | 1874.5 | −14.67 | +0.47 | −14.20 | C. E. Blunt. | Rep. Ch. of Eng's, 1876. |
| Coyote Creek. | 36 08 | 105 14 | 1874.5 | −14.25 | +0.47 | −13.78 | C. E. Blunt. | Rep. Ch. of Eng's, 1876. |
| Ocate River. | 36 10 | 105 00 | 1874.5 | −14.25 | +0.47 | −13.78 | C. E. Blunt. | Rep. Ch. of Eng's, 1876. |
| Embuda. | 36 11 | 105 54 | 1874.5 | −13.25 | +0.47 | −12.78 | R. Birnie. | Rep. Ch. of Eng's, 1876. |
| Abiquin. | 36 12 | 106 19 | 1874.5 | −13.90 | +0.47 | −13.43 | R. Birnie. | Rep. Ch. of Eng's, 1876. |
| Ojo Caliente Creek. | 36 17 | 106 02 | 1874.5 | −13.25 | +0.47 | −12.78 | R. Birnie. | Rep. Ch. of Eng's, 1876. |
| Wermejo Creek. | 36 42 | 104 47 | 1874.5 | −14.50 | +0.47 | −14.03 | C. E. Blunt. | Rep. Ch. of Eng's, 1876. |
| Tierra Amarilla. | 36 42 | 106 33 | 1873.5 | −13.71 | +0.48 | −13.23 | W. L. Marshall. | Rep. Ch. of Eng's, 1876. |
| Line, Colo. and New Mex. | 37 00 | 105 07 | 1873.5 | −14.02 | +0.48 | −13.54 | W. L. Marshall. | Rep. Ch. of Eng's, 1876. |

NEW YORK.

Group 1.

| | | | | | | | | |
|---|---|---|---|---|---|---|---|---|
| Cole, Staten Island. | 40 32 | 74 14 | 1846.35 | + 5.62 | +2.46 | + 8.08 | J. Locke. | C. and G. S. Rep., 1881, App. 9. |
| Far Rockaway, Long Island. | 40 36 | 73 46 | 1875.59 | + 7.20 | +0.81 | + 8.01 | J. M. Poole. | C. and G. S. Rep., 1881, App. 9. |
| Fire Island, West Base. | 40 38 | 73 13 | 1860.66 | + 7.76 | +1.57 | + 9.33 | C. A. Schott. | C. and G. S. Rep., 1881, App. 9. |

*Table of Observed Magnetic Declinations and Values reduced to the Year* 1890—Continued.

NEW YORK—Continued.

| Name of station. | $\varphi$ | $\lambda$ | $t$ | D | $D\Delta$ | $D_{1890.0}$ | Observer. | Reference. |
|---|---|---|---|---|---|---|---|---|
| | ° ′ | ° ′ | | ° | ° | ° | | |
| Howard. | 40 38 | 74 05 | 1840.49 | + 5.02 | +2.84 | + 7.86 | S. C. Rowan (F. R. Hassler). | C. and G. S. Rep., 1881, App. 9. |
| Mount Prospect. | 40 40 | 73 58 | 1860.73 | + 6.73 | +1.54 | + 8.27 | C. A. Schott. | C. and G. S. Rep., 1881, App. 9. |
| New York, Bedloe's Island. | 40 41 | 74 03 | 1855.60 | + 7.04 | +1.83 | + 8.87 | C. A. Schott. | C. and G. S. Rep., 1881, App. 9. |
| Babylon, Long Island. | 40 42 | 73 20 | 1875.62 | + 7.58 | +0.70 | + 8.28 | J. M. Poole. | C. and G. S. Rep., 1881, App. 9. |
| New York, Governor's Island. | 40 42 | 74 01 | 1855.60 | + 6.66 | +1.83 | + 8.49 | C. A. Schott. | C. and G. S. Rep., 1881, App. 9. |
| New York, old Columbia College. | 40 43 | 74 00 | 1845.68 | + 6.42 | +2.48 | + 8.90 | J. Renwick. | C. and G. S. Rep., 1881, App. 9. |
| Patchogue, Long Island. | 40 45 | 73 02 | 1875.59 | + 8.01 | +0.70 | + 8.71 | J. M. Poole. | C. and G. S. Rep., 1881, App. 9. |
| New York, Central Park. | 40 46 | 73 58 | 1873.96 | + 9.12* | ------ | ------ | T. C. Hilgard. | C. and G. S. Rep., 1881, App. 9. |
| New York, Rec. Res. Central Park (S. V. S.). | 40 47 | 73 58 | 1855.61 | + 6.47 | ------ | + 8.49 | C. A. Schott. | C. and G. S. Rep., 1881, App. 9. |
| New York, Central Park. | 40 48 | 73 57 | 1874.06 | + 9.31* | ------ | ------ | T. C. Hilgard. | C. and G. S., Rep., 1881, App. 9. |
| West Hills, Long Island. | 40 49 | 73 26 | 1865.62 | + 7.02 | +1.27 | + 8.29 | E. Goodfellow (A. D. Bache). | C. and G. S. Rep., 1881, App. 9. |
| Legget. | 40 49 | 73 54 | 1847.80 | + 5.68 | +2.33 | + 8.01 | R. H. Fauntleroy. | C. and G. S. Rep., 1881, App. 9. |
| New York, Riverside Park. | 40 49 | 73 58 | 1885.79 | + 9.00 | +0.26 | + 9.26 | J. B. Baylor. | MS. in C. and G. S. Office. |
| Manhattanville, Bloomingdale Asylum. | 40 50 | 73 56 | 1846.33 | + 5.16 | +2.44 | + 7.60 | J. Locke. | C. and G. S. Rep., 1881, App. 9. |
| West Hampton. | 40 51 | 72 34 | 1875.64 | + 8.67 | +0.84 | + 9.51 | J. M. Poole. | C. and G. S. Rep., 1881, App. 9. |
| Ruland, Long Island. | 40 51 | 73 02 | 1865.40 | + 7.51 | +1.29 | + 8.80 | E. Goodfellow (A. D. Bache). | C. and G. S. Rep., 1881, App. 9. |
| Oyster Bay, Long Island. | 40 52 | 73 32 | 1844.71 | + 6.84 | +2.50 | + 9.34 | J. Renwick. | C. and G. S. Rep., 1881, App. 9. |
| Sand's Point Light, Long Island. | 40 52 | 73 44 | 1847.77 | + 6.16 | +2.38 | + 8.54 | R. H. Fauntleroy. | C. and G. S. Rep., 1881, App. 9. |
| New Rochelle. | 40 52 | 73 47 | 1844.69 | + 5.49 | +2.52 | + 8.01 | J. Renwick. | C. and G. S. Rep., 1881, App. 9. |
| Drowned Meadow. | 40 56 | 73 04 | 1845.70 | + 6.06 | +2.82 | + 8.88 | J. Renwick. | C. and G. S. Rep., 1881, App. 9. |
| Lloyd Harbor, Long Island. | 40 56 | 73 25 | 1844.71 | + 6.19 | +2.50 | + 8.69 | J. Renwick. | C. and G. S. Rep., 1881, App. 9. |

*Local deflection.

*Table of Observed Magnetic Declinations and Values reduced to the Year* 1890—Continued.

NEW YORK—Continued.

| Name of station. | φ | λ | t | D | DΔ | $D_{1890.0}$ | Observer. | Reference. |
|---|---|---|---|---|---|---|---|---|
| | ° ′ | ° ′ | | ° | ° | ° | | |
| East Hampton. | 40 58 | 72 12 | 1875.64 | + 9.09 | +0.71 | + 9.80 | J. M. Poole. | C. and G. S. Rep., 1881, App. 9. |
| Sag Harbor. | 41 00 | 72 17 | 1860.68 | + 8.46 | +1.62 | +10.08 | C. A. Schott. | C. and G. S. Rep., 1881, App. 9. |
| Port Chester. | 41 00 | 73 40 | 1844.70 | + 5.97 | +2.52 | + 8.49 | J. Renwick. | C. and G. S. Rep., 1881, App. 9. |
| Duer. | 41 00 | 73 54 | 1873.62 | + 7.62 | +0.91 | + 8.53 | G. H. Cook. | C. and G. S. Rep., 1881, App. 9. |
| Montauk Point, Long Island. | 41 04 | 71 51 | 1875.66 | + 9.75 | +0.80 | +10.55 | J. M. Poole. | C. and G. S. Rep., 1881, App. 9. |
| Greenpoint, Long Island. | 41 06 | 72 21 | 1845.63 | + 7.24 | +2.59 | + 9.83 | J. Redwick. | C. and G. S. Rep., 1881, App. 9. |
| Round Hill. | 41 06 | 73 40 | 1833.52 | + 5.72 | +3.20 | + 8.92 | F. R. Hassler. | C. and G. S. Rep., 1881, App. 9. |
| Buttermilk. | 41 07 | 73 49 | 1833.47 | + 3.93 | +3.20 | + 7.13 | F. R. Hassler. | C. and G. S. Rep., 1881, App. 9. |
| Bald Hill. | 41 13 | 73 29 | 1833.56 | + 5.57 | +3.44 | + 9.01 | F. R. Hassler. | C. and G. S. Rep., 1881, App. 9. |
| Carpenter's Point, Port Jervis. | 41 21 | 74 42 | 1873.47 | + 7.08 | +1.09 | + 8.17 | E. Smith. | C. and G. S. Rep., 1881, App. 9. |
| Coldspring. | 41 25 | 73 58 | 1855.66 | + 5.57* | ------ | ------ | C. A. Schott. | C. and G. S. Rep., 1881, App. 9. |
| Binghamton. | 42 05 | 75 56 | 1888.50 | + 7.82 | +0.09 | + 7.91 | J. B. Baylor. | MS. in C. and G. S. Office. |
| Bath, in park. | 42 21 | 77 21 | 1862.61 | + 4.80 | +2.01 | + 6.81 | C. A. Schott. | C. and G. S. Rep., 1881, App. 9. |
| Oxford (S. V. S.). | 42 26 | 75 40 | 1885.73 | + 7.72 | ------ | + 8.05 | J. B. Baylor. | MS. in C. and G. S. Office. |
| Ithaca, Cornell University Grounds. | 42 28 | 76 33 | 1874.45 | + 5.43 | +1.07 | + 6.50 | T. C. Hilgard. | C. and G. S. Rep., 1881, App. 9. |
| Greenbush, opposite Albany. | 42 38 | 73 44 | 1855.66 | + 7.91 | +2.29 | +10.20 | C. A. Schott. | C. and G. S. Rep., 1881, App. 9. |
| Albany, Dudley Obs. (S. V. S.). | 42 40 | 73 45 | 1879.81 | + 9.86 | ------ | +10.46 | J. B. Baylor. | C. and G. S. Rep., 1881, App. 9. |
| Sherburne. | 42 41 | 75 33 | 1875.67 | + 7.82 | +0.98 | + 8.80 | J. M. Poole. | C. and G. S. Rep., 1881, App. 9. |
| Otsego. | 42 47 | 74 42 | 1882.63 | + 8.77 | +0.45 | + 9.22 | J. B. Baylor (C. O. Boutelle). | MS. in C. and G. S. Office. |
| Buffalo, Fort Porter (S. V. S.). | 42 55 | 78 54 | 1885.71 | + 5.07 | ------ | + 5.30 | J. B. Baylor. | MS. in C. and G. S. Office. |
| Fenner. | 42 57 | 75 45 | 1882.76 | + 7.26 | +0.52 | + 7.78 | J. B. Baylor (C. O. Boutelle). | MS. in C. and G. S. Office. |
| Howlett. | 43 00 | 76 17 | 1883.66 | + 7.78 | +0.46 | + 8.24 | J. B. Baylor (C. O. Boutelle). | MS. in C. and G. S. Office. |

* Local deflection.

*Table of Observed Magnetic Declinations and Values reduced to the Year* 1890—Continued.

NEW YORK—Continued.

| Name of station. | φ | λ | t | D | ΔD | $D_{1890.0}$ | Observer. | Reference. |
|---|---|---|---|---|---|---|---|---|
| | ° ′ | ° ′ | | ° | ° | ° | | |
| Clinton, Hamilton College. | 43 03 | 75 24 | 1874.82 | + 8.09 | +1.07 | + 9.16 | T. C. Hilgard. | C. and G. S. Rep., 1881, App. 9. |
| Clyde. | 43 03 | 76 52 | 1883.72 | + 7.07 | +0.47 | + 7.54 | J. B. Baylor (C. O. Boutelle). | MS. in C. and G. S. Office. |
| Loomis. | 43 21 | 76 17 | 1882.86 | + 8.17 | +0.59 | + 8.76 | J. B. Baylor (C. O. Boutelle). | MS. in C. and G. S. Office. |
| Pen Mount. | 43 23 | 75 16 | 1882.64 | + 8.54 | +0.57 | + 9.11 | J. B. Baylor (C. O. Boutelle). | MS. in C. and G. S. Office. |
| Prospect. | 43 26 | 73 45 | 1882.60 | +10.85 | +0.52 | +11.37 | J. B. Baylor (C. O. Boutelle). | MS. in C. and G. S. Office. |
| Mannsville. | 43 43 | 76 03 | 1884.44 | + 6.85 | +0.45 | + 7.30 | J. B. Boutelle (C. O. Boutelle). | MS. in C. and G. S. Office. |
| Pierrepont Manor (S. V. S.). | 43 44 | 76 03 | 1874.80 | + 6.20 | ------ | + 8.05 | T. C. Hilgard. | C. and G. S. Rep., 1881, App. 9. |
| Potsdam. | 44 37 | 75 00 | 1874.79 | + 9.42 | +1.36 | +10.78 | T. C. Hilgard. | C. and G. S. Rep., 1881, App. 9. |
| Rouse's Point. | 45 00 | 73 21 | 1879.75 | +13.65 | +0.79 | +14.44 | J. B. Baylor. | C. and G. S. Rep., 1881, App. 9. |

Group 2.

| | | | | | | | | |
|---|---|---|---|---|---|---|---|---|
| Jamaica. | 40 41 | 73 56 | 1835.5 | + 4.00 | +3.17 | + 7.17 | ---------- | Sill. Jour., Vol. 34, 1838. |
| Ways Reef, Hell Gate. | 40 46 | 73 56 | 1874.6 | + 7.38 | +0.87 | + 8.25 | J. Newton. | Rep. Ch. of Eng's, 1875. |
| Cold Spring Harbor, Long Isl'd (S.V.S.). | 40 52 | 73 28 | 1886.5 | + 8.57 | ------ | + 8.89 | J. and E. Jones. | MS. in C. and G. S. Office. |
| East Hampton. | 41 00 | 72 19 | 1834.84 | + 6.13 | +3.46 | + 9.59 | ---------- | Geol. Sur. of N. Y. |
| Liberty Corner. | 41 17 | 74 31 | 1874.6 | + 6.75 | +0.87 | + 7.62 | E. A. Bowser. | Mag. Sur. of N. J., 1888. |
| Unionville. | 41 18 | 74 34 | 1874.6 | + 6.05 | +0.87 | + 6.92 | E. A. Bowser. | Mag. Sur. of N. J., 1888. |
| Monroe. | 41 21 | 74 11 | 1859.5 | + 6.63 | +1.60 | + 8.23 | T. B. Brooks. | MS. in C. and G. S. Office. |
| West Point. | 41 25 | 73 56 | 1835.7 | + 6.52 | +3.07 | + 9.59 | C. Davies. | Geol. Sur. of N. Y. |
| North Salem. | 41 26 | 73 38 | 1843.5 | + 6.00 | +2.85 | + 8.85 | ---------- | Regents' Rep., 1869. |
| Travis, near Initial Point. | 42 00 | 75 21 | 1882.55 | + 7.50 | +0.49 | + 7.99 | H. W. Clarke. | MS. in C. and G. S. Office. |
| Delaware River, Initial Pt. | 42 00 | 75 22* | 1774.5 | + 4.33 | ------ | ------ | D. Rittenhouse. | Geol. Sur. of N. Y. |
| Pennsylvania Line, 20⅜ miles W. of Del. | 42 00 | 75 45* | 1786.5 | + 3.53 | +4.66 | + 8.19 | S. De Witt and others. | Geol. Sur. of N. Y. |
| Finn, near mile-stone 20. | 42 00 | 75 46 | 1877.81 | + 7.37 | +0.82 | + 8.19 | H. W. Clarke. | MS. in C. and G. S. Office. |

* Corrected.

*Table of Observed Magnetic Declinations and Values reduced to the Year* 1890—Continued.

NEW YORK—Continued.

| Name of station. | $\varphi$ | $\lambda$ | $t$ | D | $\Delta$D | $D_{1890.0}$ | Observer. | Reference. |
|---|---|---|---|---|---|---|---|---|
| | ° ′ | ° ′ | | ° | ° | ° | | |
| Pennsylvania Line, 39½ miles W. of Del. | 42 00 | 76 08* | 1786.5 | + 3.67 | +4.66 | + 8.33 | S. De Witt and others. | Geol. Sur. of N. Y. |
| Waverly, near mile-stone 60. | 42 00 | 76 32 | 1877.64 | + 5.52 | +0.82 | + 6.34 | H. W. Clarke. | MS. in C. and G. S. Office. |
| Pennsylvania Line, Chemung River, 60⅞ miles W. of Del. | 42 00 | 76 35* | 1786.5 | + 1.83 | +4.66 | + 6.49 | S. De Witt and others. | Geol. Sur. of N. Y. |
| Pennsylvania Line, Tioga River, 90 miles W. of Del. | 42 00 | 77 06* | 1786.8 | + 2.50 | +4.34 | + 6.84 | S. De Witt and others. | Geol. Sur. of N. Y. |
| Pennsylvania Line, 109½ miles W. of Del. | 42 00 | 77 28* | 1786.5 | + 1.87 | +4.34 | + 6.21 | S. De Witt and others. | Geol. Sur. of N. Y. |
| Pennsylvania Line, 136⅝ miles W. of Del. | 42 00 | 78 05* | 1786.5 | + 0.75 | +4.34 | + 5.09 | S. De Witt and others. | Geol. Sur. of N. Y. |
| Pennsylvania Line, 167$\frac{1}{10}$ miles W. of Del. | 42 00 | 78 40* | 1786.5 | + 1.50 | +4.02 | + 5.52 | S. De Witt and others. | Geol. Sur. of N. Y. |
| Pennsylvania Line, 195⅛ miles W. of Del. | 42 00 | 79 09* | 1786.5 | + 0.92 | +4.02 | + 4.94 | S. De Witt and others. | Geol. Sur. of N. Y. |
| Pennsylvania Line, French Creek, 227¼ miles W. of Del. | 42 00 | 79 46* | 1786.5 | + 0.53 | +3.70 | + 4.23 | S. De Witt and others. | Geol. Sur. of N. Y. |
| New Pre-emption Line, mile-stone 82. | 42 00 | 76 58* | 1795.5 | + 3.42† | +4.69 | + 6.86 | B. Ellicott. | Geol. Sur. of N. Y. |
| Oblong. | 42 03 | 73 31 | 1786.5 | + 5.05 | +4.56 | + 9.61 | —— Williams. | Geol. Sur. of N. Y. |
| Madalin. | 42 03 | 73 54 | 1878.00 | + 8.77 | +0.70 | + 9.47 | G. Cooke. | MS. in C. and G. S. Office. |
| New Pre-emption Line, 6 miles. | 42 05 | 76 58* | 1795.5 | + 2.83† | +4.69 | + 6.27 | B. Ellicott. | Geol. Sur. of N. Y. |
| Ancram. | 42 06 | 73 37 | 1853.5 | + 7.65 | +2.35 | +10.00 | J. T. Hogeboom. | Geol. Sur. of N. Y. |
| Owego. | 42 06 | 76 16 | 1868.5 | + 5.37 | +1.52 | + 6.89 | S. Camp. | MS. in C. and G. S. Office. |
| New Pre-emption Line, Chemung River. | 42 07 | 76 58* | 1795.5 | + 3.33† | +4.69 | + 6.77 | B. Ellicott. | Geol. Sur. of N. Y. |
| Livingston. | 42 10 | 73 52 | 1888.5 | + 9.52 | +0.08 | + 9.60 | R. Hood. | MS. in C. and G. S. Office. |

* Corrected.

† An index correction of −1¼° is needed according to myself and H. W. Clarke; it has been applied in the column $D_{1890.0}$—[SCH.]

*Table of Observed Magnetic Declinations and Values reduced to the Year* 1890—Continued.

NEW YORK—Continued.

| Name of station. | φ | λ | t | D | ΔD | $D_{1890.0}$ | Observer. | Reference. |
|---|---|---|---|---|---|---|---|---|
| | ° ′ | ° ′ | | ° | ° | ° | | |
| Holland Land Co. | 42 10 | 78 15 | 1798.5 | + 1.15 | +4.56 | + 5.71 | A. Porter. | Regents' Rep., 1869. |
| Holland Land Co. | 42 10 | 78 23 | 1798.5 | + 1.02 | +4.56 | + 5.58 | J. Smedley. | Regents' Rep., 1869. |
| New Pre-emption Line, 14 miles. | 42 12 | 76 58* | 1795.5 | + 3.92† | +4.69 | + 7.36 | B. Ellicott. | Geol. Sur. of N. Y. |
| Holland Land Co. | 42 12 | 78 09 | 1798.5 | − 0.52 | +4.56 | + 5.08 | A. Atwater. | Regents' Rep., 1869. |
| Holland Land Co. | 42 14 | 78 10 | 1799.5 | + 1.20 | +4.58 | + 5.78 | S. Benton, Jr. | Regents' Rep., 1869. |
| Hudson. | 42 15 | 73 48 | 1888.5 | + 9.52 | +0.08 | + 9.60 | R. Hood. | MS. in C. and G. S. Office. |
| Holland Land Co. | 42 15 | 78 22 | 1798.5 | + 1.20 | +4.56 | + 5.76 | J. Smedley. | Regents' Rep., 1869. |
| Mayville. | 42 16 | 79 40 | 1874.59 | + 2.25 | +1.60 | + 3.25 | F. E. Hilgard. | Nat. Acad. Sc. |
| Monument, Lake Erie. | 42 16 | 79 46 | 1790.64 | + 0.04 | +3.85 | + 3.89 | A. Ellicott. | Regents' Rep., 1869. |
| Ellicottville. | 42 18 | 78 44 | 1841.62 | + 2.60 | +3.50 | + 6.10 | A. D. Bache. | C. S. Rep., 1862. |
| Holland Land Co. | 42 19 | 79 08 | 1798.5 | − 0.75 | +4.56 | + 3.81 | A. Atwater. | Regents' Rep., 1869. |
| Lampman. | 42 20 | 73 48 | 1880.7 | + 9.37 | +0.52 | + 9.89 | J. T. Gardner. | N. Y. State Sur., 1880. |
| Pre-emption Line, 23¼ miles. | 42 20 | 76 58* | 1795.5 | + 3.02† | +4.86 | + 6.63 | B. Ellicott. | Geol. Sur. of N. Y. |
| Holland Land Co. | 42 20 | 78 40 | 1799.5 | + 1.45 | +4.58 | + 6.03 | A. Atwater. | Regents' Rep., 1869. |
| Westfield. | 42 20 | 79 36 | 1875.71 | + 3.18 | +0.92 | + 4.10 | F. M. Towar. | P. P., U. S. Eng's, No. 24, 1882. |
| Bath. | 42 21 | 77 21 | 1879.5 | + 5.27 | +0.68 | + 5.95 | H. F. De Puy. | MS. in C. and G. S. Office. |
| Guilford. | 42 23 | 75 29* | 1838.51 | + 4.50 | +3.68 | + 8.18 | ---------- | Geol. Sur. of N. Y. |
| Old Kana-andoa. | 42 27 | 78 00 | 1798.5 | + 1.00 | +4.72 | + 5.72 | A. Porter. | Regents' Rep., 1869. |
| New Pre-emption Line, 31½ miles. | 42 28 | 76 58 | 1795.5 | + 3.42† | +5.03 | + 7.20 | B. Ellicott. | Geol. Sur. of N. Y. |
| Holland Land Co. | 42 30 | 78 06 | 1798.5 | + 1.13 | +4.72 | + 5.85 | A. Atwater. | Regents' Rep., 1869. |
| Dunkirk. | 42 30 | 79 21 | 1845.5 | + 1.12 | +3.26 | + 4.38 | J. H. Simpson. | P. P., U. S. Eng's, No. 24, 1882. |
| Holland Land Co. | 42 31 | 79 03 | 1798.5 | − 0.85 | +4.72 | + 3.87 | A. Atwater. | Regents' Rep., 1869. |
| Pre-emption Line, 37 miles. | 42 32 | 76 58* | 1795.5 | + 3.00† | +5.03 | + 6.78 | B. Ellicott. | Geol. Sur. of N. Y. |
| Cass and Clarksville. | 42 34 | 73 58 | 1877.9 | + 8.75 | +0.70 | + 9.45 | J. T. Gardner. | N. Y. State Sur., 1879. |
| Milo. | 42 35 | 77 02 | 1878.5 | + 7.25 | +0.78 | + 8.03 | J. T. Gardner. | N. Y. State Sur., 1879. |
| Pre-emption Line, 41½ miles. | 42 36 | 76 58* | 1795.5 | + 3.58† | +5.03 | + 7.36 | B. Ellicott. | Geol. Sur. of N. Y. |
| Gorham Purchase. | 42 36 | 78 03 | 1798.5 | + 0.87 | +5.06 | + 5.93 | G. Burgess. | Regents' Rep., 1869. |
| Summit and Holmes. | 42 37 | 74 33 | 1877.9 | + 8.88 | +0.76 | + 9.64 | J. T. Gardner. | N. Y. State Sur., 1879. |

*Corrected.

† An index correction of —1¼° is needed, according to myself and H2W. Clarke; it has been applied in the column $D_{1890.0}$—[SCH.]

*Table of Observed Magnetic Declinations and Values reduced to the Year* 1890—Continued.

NEW YORK—Continued.

| Name of station. | φ | λ | t | D | ΔD | $D_{1890.0}$ | Observer. | Reference. |
|---|---|---|---|---|---|---|---|---|
| | ° ′ | ° ′ | | ° | ° | ° | | |
| Slingerland. | 42 38 | 73 52 | 1877.9 | + 8.75 | +0.70 | + 9.45 | J. T. Gardner. | N. Y. State Sur., 1879. |
| Helderberg. | 42 38 | 74 01 | 1877.7 | + 8.75 | +0.71 | + 9.46 | J. T. Gardner. | N. Y. State Sur., 1879. |
| Homer. | 42 38 | 76 11 | 1840.81 | + 5.08 | +3.53 | + 8.61 | ---------- | Geol. Sur. of N. Y. |
| Gardeau Reservation. | 42 38 | 77 51 | 1798.68 | + 1.58 | +5.06 | + 6.64 | A. Porter. | Regents' Rep., 1869. |
| Holland Land Co. | 42 39 | 78 13 | 1799.5 | + 0.45 | +5.08 | + 5.53 | J. Dewey. | Regents' Rep., 1869. |
| Holland Land Co. | 42 39 | 78 23 | 1798.5 | + 1.90 | +5.06 | + 6.96 | J. Smedley. | Regents' Rep., 1869. |
| Pre-emption Line, 47¼ miles. | 42 41 | 76 58* | 1795.5 | + 3.25† | +5.03 | + 7.03 | B. Ellicott. | Geol. Sur. of N. Y. |
| Sears and Mann. | 42 42 | 74 17 | 1877.9 | + 9.12 | +0.70 | + 9.82 | J. T. Gardner. | N. Y. State Sur., 1879. |
| Knowersville and Winn. | 42 43 | 74 02 | 1877.9 | + 8.88 | +0.70 | + 9.58 | J. T. Gardner. | N. Y. State Sur., 1879. |
| Holland Land Co. | 42 43 | 78 13 | 1798.5 | + 0.62 | +5.06 | + 5.68 | A. Atwater. | Regents' Rep., 1869. |
| Troy. | 42 44 | 73 40 | 1827.5 | + 6.08 | +4.25 | +10.33 | ---------- | Sill. Jour., Vol. 17, 1830. |
| Freleigh and Niskayuna. | 42 46 | 73 49 | 1877.9 | + 9.62 | +0.70 | +10.32 | J. T. Gardner. | N. Y. State Sur., 1879. |
| Conover and Chapman. | 42 47 | 74 15 | 1877.9 | + 9.00 | +0.70 | + 9.70 | J. T. Gardner. | N. Y. State Sur., 1879. |
| Oak Ridge. | 42 47 | 74 19 | 1880.8 | + 9.27 | +0.51 | + 9.78 | J. T. Gardner. | N. Y. State Sur., 1880. |
| Cherry Valley. | 42 48 | 74 47 | 1839.63 | + 5.22 | +3.54 | + 8.76 | ---------- | Geol. Sur. of N. Y. |
| Schenectady, Union College. | 42 49 | 73 55 | 1859.2 | + 7.96 | +2.03 | + 9.99 | T. B. Brooks. | MS. in C. and G. S. Office. |
| Hamilton. | 42 49 | 75 34 | 1837.8 | + 4.50 | +3.72 | + 8.22 | ---------- | Geol. Sur. of N. Y. |
| Holland Land Co. | 42 50 | 78 19 | 1799.5 | + 0.35 | +5.08 | + 5.43 | J. Dewey. | Regents' Rep., 1869. |
| Holland Land Co. | 42 51 | 78 11 | 1799.5 | + 1.08 | +5.08 | + 6.16 | J. Dewey. | Regents' Rep., 1869. |
| New Pre-emption Line, 60 miles. | 42 52 | 76 58* | 1795.5 | + 3.00† | +5.03 | + 6.78 | B. Ellicott. | Geol. Sur. of N. Y. |
| Geneva. | 42 52 | 77 05* | 1833.75 | + 3.82 | +4.13 | + 7.95 | ---------- | Geol. Sur. of N. Y. |
| Canajoharie. | 42 53 | 74 35 | 1839.80 | + 6.08 | +3.47 | + 9.55 | ---------- | Geol. Sur. of N. Y. |
| Van Atten. | 42 54 | 74 00 | 1877.9 | +10.25 | +0.70 | +10.95 | J. T. Gardner. | N. Y. State Sur., 1879. |
| Fort Erie. | 42 54 | 78 59 | 1839.5 | + 1.25 | +3.98 | + 5.23 | (Chart). | U. S. Lake Sur. |
| Cazenovia. | 42 55 | 75 51 | 1843.47 | + 3.87 | +3.59 | + 7.46 | ---------- | Geol. Sur. of N. Y. |
| Auburn. | 42 55 | 76 28 | 1833.82 | + 3.72 | +4.15 | + 7.87 | ---------- | Geol. Sur. of N. Y. |
| Tassel. | 42 56 | 75 19 | 1879.6 | + 8.15 | +0.70 | + 8.85 | J. T. Gardner. | N. Y. State Sur., 1880. |
| New Pre-emption Line, 65 miles. | 42 56 | 76 58* | 1795.5 | + 3.33† | +5.03 | + 7.11 | B. Ellicott. | Geol. Sur. of N. Y. |
| Nellis, Reman, and Willett. | 42 57 | 74 38 | 1880.8 | + 9.10 | +0.56 | + 9.66 | J. T. Gardner. | N. Y. State Sur., 1880. |

* Correction.

† An index correction of —1¼° is needed, according to myself and H. W. Clarke; it has been applied in the column $D_{1890.0}$—[SCH.]

*Table of Observed Magnetic Declinations and Values reduced to the Year* 1890—Continued.

NEW YORK—Continued.

| Name of station. | $\varphi$ | $\lambda$ | $t$ | D | $\Delta$D | $D_{1890\cdot0}$ | Observer. | Reference. |
|---|---|---|---|---|---|---|---|---|
| | ° ′ | ° ′ | | ° | ° | ° | | |
| Ostrander. | 42 57 | 74 48 | 1880.7 | + 9.10 | +0.57 | + 9.67 | J. T. Gardner. | N. Y. State Sur., 1880. |
| Hoxsie and Seeley. | 42 57 | 76 22 | 1878.6 | + 6.33 | +0.86 | + 7.19 | J. T. Gardner. | N. Y. State Sur., 1879. |
| Strawberry Island. | 42 57 | 78 55 | 1875.54 | + 4.00 | +1.16 | + 5.16 | F. Terry. | P. P., U. S. Eng's, No. 24, 1882. |
| Shoemaker and Yule. | 42 58 | 74 54 | 1879.6 | + 8.54 | +0.64 | + 9.18 | J. T. Gardner. | N. Y. State Sur., 1880. |
| Clapp. | 42 58 | 76 02 | 1878.6 | + 7.20 | +0.86 | + 8.06 | J. T. Gardner. | N. Y. State Sur., 1879. |
| Green. | 42 59 | 76 02 | 1878.6 | + 6.98 | +0.83 | + 7.81 | J. T. Gardner. | N. Y. State Sur., 1879. |
| Johnstown. | 43 00 | 74 23 | 1818.90 | + 6.03 | +4.69 | +10.72 | ------ --------- | Geol. Sur. of N. Y. |
| Cossitt. | 43 00 | 76 12 | 1878.6 | + 6.77 | +0.86 | + 7.63 | J. T. Gardner. | N. Y. State Sur., 1879. |
| Grand Island. | 43 00 | 79 01 | 1875.62 | + 2.97 | +1.16 | + 4.13 | A. C. Lamson. | P. P., U. S. Eng's, No. 24, 1882. |
| Vedder. | 43 01 | 74 39 | 1880.7 | + 9.13 | +0.60 | + 9.73 | J. T. Gardner. | N. Y. State Sur., 1880. |
| Eagle. | 43 01 | 75 55 | 1878.6 | + 7.28 | +0.86 | + 8.14 | J. T. Gardner. | N. Y. State Sur., 1879. |
| Tanner. | 43 01 | 76 34 | 1878.5 | + 3.82 | +0.86 | + 4.68 | J. T. Gardner. | N. Y. State Sur., 1879. |
| Bulger and Cranson. | 43 02 | 75 43 | 1879.5 | + 7.27 | +0.78 | + 8.05 | J. T. Gardner. | N. Y. State Sur., 1879. |
| Getman, Herkimer, and Jackson. | 43 02 | 75 00 | 1879.6 | + 8.43 | +0.72 | + 9.15 | J. T. Gardner. | N. Y. State Sur., 1880. |
| Prospect. | 43 02 | 75 27 | 1879.5 | + 8.58 | +0.78 | + 9.36 | J. T. Gardner. | N. Y. State Sur., 1880. |
| Eaton. | 43 02 | 75 33 | 1879.5 | + 7.93 | +0.78 | + 8.71 | J. T. Gardner. | N. Y. State Sur., 1879. |
| Little Falls. | 43 03 | 74 52 | 1880.7 | + 7.35 | +0.63 | + 7.98 | J. T. Gardner. | N. Y. State Sur., 1880. |
| Merry. | 43 03 | 75 10 | 1879.6 | + 8.63 | +0.71 | + 9.34 | J. T. Gardner. | N. Y. State Sur., 1880. |
| Clyde. | 43 03 | 76 52 | 1878.5 | + 5.72 | +0.87 | + 6.59 | J. T. Gardner. | N. Y. State Sur., 1879. |
| New Pre-emption Line, 72½ miles. | 43 03 | 76 58* | 1795.5 | + 3.83† | +5.03 | + 7.61 | B. Ellicott. | Geol. Sur. of N. Y. |
| Kirkville. | 43 04 | 75 56 | 1879.5 | + 7.05 | +0.78 | + 7.83 | J. T. Gardner. | N. Y. State Sur., 1879. |
| Tonawanda Reservation. | 43 04 | 78 22 | 1799.1 | + 1.50 | +5.06 | + 6.56 | J. Thompson. | Regents' Rep., 1869. |
| Tonawanda. | 43 04 | 78 56 | 1875.57 | + 3.83 | +1.16 | + 4.99 | A. C. Lamson. | P. P., U. S. Eng's, No. 24, 1882. |

*Corrected.

†An index correction of — 1¼° is needed, according to myself and H. W. Clarke; it has been applied in the column $D_{1890\cdot0}$—[SCH.]

*Table of Observed Magnetic Declinations and Values reduced to the Year* 1890—Continued.

NEW YORK—Continued.

| Name of station. | $\varphi$ | $\lambda$ | $t$ | D | $\Delta$D | $D_{1890.0}$ | Observer. | Reference. |
|---|---|---|---|---|---|---|---|---|
| | ° ′ | ° ′ | | ° | ° | ° | | |
| Niagara Falls. | 43 04 | 79 04 | 1874.58 | + 3.62 | +1.24 | + 4.86 | F. E. Hilgard. | Nat. Acad. Sc. |
| Allis and Canastota. | 43 05 | 75 46 | 1879.5 | + 7.52 | +0.78 | + 8.30 | J. T. Gardner. | N. Y. State Sur., 1879. |
| Utica. | 43 06 | 75 13 | 1835.5 | + 3.88* | +4.19 | + 8.07 | ---------- | Sill. Jour., Vol. 34, 1838. |
| Collamer. | 43 06 | 76 04 | 1879.5 | + 7.33 | +0.78 | + 8.11 | J. T. Gardner. | N. Y. State Sur., 1880. |
| Davison. | 43 06 | 76 17 | 1878.6 | + 6.57 | +0.83 | + 7.40 | J. T. Gardner. | N. Y. State Sur., 1879. |
| Suspension Bridge, Niagara. | 43 07 | 79 03 | 1875.54 | + 2.40 | +1.08 | + 3.48 | F. M. Towar. | P. P., U. S. Eng's, No. 24, 1882. |
| Barto. | 43 08 | 74 53 | 1879.6 | + 9.52 | +0.71 | +10.23 | J. T. Gardner. | N. Y. State Sur., 1880. |
| Rochester. | 43 08† | 77 39 | 1876.5 | + 5.68 | +1.10 | + 6.78 | L. L. Nichols. | MS. in C. and G. S. Office. |
| Gorham Purchase. | 43 08 | 78 01 | 1798.5 | + 1.03 | +5.06 | + 6.09 | G. Burgess. | Regents' Rep., 1869. |
| Orleans Co. | 43 09 | 78 16 | 1888.88 | + 6.07 | +0.08 | + 6.15 | D. D. Waldo. | MS. in C. and G. S. Office. |
| Schuyler. | 43 10 | 75 07 | 1879.6 | + 8.93 | +0.71 | + 9.64 | J. T. Gardner. | N. Y. State Sur., 1880. |
| Williams. | 43 10 | 75 13 | 1879.6 | + 8.97 | +0.71 | + 9.68 | J. T. Gardner. | N. Y. State Sur., 1880. |
| New Pre-emption Line at Lake Ontario. | 43 10 | 76 58† | 1795.5 | + 3.42‡ | +5.03 | + 7.20 | B. Ellicott. | Geol. Sur. of N. Y. |
| Charlotte. | 43 13 | 77 40 | 1875.43 | + 4.53 | +1.17 | + 5.70 | F. M. Towar. | P. P., U. S. Eng's, No. 24, 1882. |
| Rome. | 43 14 | 75 28 | 1879.5 | + 7.87 | +0.71 | + 8.58 | J. T. Gardner. | N. Y. State Sur., 1879. |
| High Dune. | 43 15 | 75 04 | 1883.55 | + 9.45 | +0.43 | + 9.88 | V. Colvin. | Ad. and S. L. Sur., 1884. |
| Vienna. | 43 15 | 75 41 | 1879.5 | + 8.40 | +0.71 | + 9.11 | J. T. Gardner. | N. Y. State Sur., 1879. |
| Youngstown. | 43 15 | 79 03 | 1864.5 | + 3.00 | +1.92 | + 4.92 | J. Barney. | P. P., U. S. Eng's, No. 24, 1882. |
| Fort Niagara. | 43 15 | 79 04 | 1864.5 | + 3.02 | +2.10 | + 5.12 | ---------- | U. S. Sur. N. and NW. Lakes. |
| Jerseyfield Lake. | 43 16 | 74 44 | 1883.52 | + 8.84§ | +0.43 | + 9.27 | V. Colvin. | Ad. and S. L. Sur., 1884. |
| Service's Patent, NE. corner. | 43 16 | 75 04 | 1883.55 | + 9.87‖ | +0.43 | +10.30 | V. Colvin. | Ad. and S. L. Sur., 1884. |

* Mean of two values. † Corrected.

‡ An index correction of —1¼° is needed, according to myself and H. W. Clarke; it has been applied in the column $D_{1890.0}$—[SCH.]

§ Mean of four stations. ‖ Mean of three stations.

*Table of Observed Magnetic Declinations and Values reduced to the Year* 1890—Continued.

NEW YORK—Continued.

| Name of station. | φ | λ | t | D | ΔD | $D_{1890.0}$ | Observer. | Reference. |
|---|---|---|---|---|---|---|---|---|
| | ° ′ | ° ′ | | ° | ° | ° | | |
| Oneida Co. | 43 16 | 75 04 | 1802.5 | + 5.00 | +5.10 | +10.10 | ------ | Ad. and S. L. Sur., 1884. |
| Great Sodus. | 43 16 | 76 58 | 1875.40 | + 6.83 | +1.20 | + 8.03 | J. Eisenmann. | P. P., U. S. Eng's, No. 24, 1882. |
| Lyon's Point. | 43 16 | 77 26 | 1875.42 | + 6.07 | +1.20 | + 7.27 | F. Terry. | P. P., U. S. Eng's, No. 24, 1882. |
| Holland Land Co. | 43 16 | 78 43 | 1799.5 | + 0.50 | +5.07 | + 5.57 | S. Benton, jr. | Regents' Rep., 1869. |
| Mouth of Niagara River. | 43 16 | 79 04 | 1875.53 | + 3.68 | +1.04 | + 4.72 | F. M. Towar. | P. P., U. S. Eng's, No. 24, 1882. |
| Luzerne. | 43 17 | 73 50 | 1883.58 | +10.92 | +0.43 | +11.35 | V. Colvin. | Ad. and S. L. Sur., 1884. |
| Six miles west of Little Sodus. | 43 18 | 76 49 | 1874.77 | + 6.83 | +1.26 | + 8.09 | J. Eisenmann. | P. P., U. S. Eng's, No. 24. 1882. |
| East Porter. | 43 18 | 78 55 | 1875.45 | + 3.27 | +1.05 | + 4.32 | J. Eisenmann. | P. P., U. S. Eng's, No. 24, 1882. |
| Little Sodus. | 43 19 | 76 43 | 1874.82 | + 7.05 | +1.26 | + 8.31 | F. Terry. | P. P., U. S. Eng's, No. 24, 1882. |
| Morehouseville. | 43 20 | 74 45 | 1883.59 | + 8.38 | +0.43 | + 8.81 | V. Colvin. | Ad. and S. L. Sur., 1884. |
| Braddock's Point. | 43 20 | 78 43 | 1875.41 | + 4.80 | +1.06 | + 5.86 | A. C. Lamson. | P. P., U. S. Eng's, No. 24, 1882. |
| Olcott Harbor. | 43 20 | 78 43 | 1875.49 | + 3.67 | +1.04 | + 4.71 | A. C. Lamson. | P. P., U. S. Eng's, No. 24, 1882. |
| At Lake Ontario. | 43 21 | 78 01 | 1799.5 | + 1.00 | +5.07 | + 6.07 | A. Atwater. | Regents' Rep., 1869. |
| Oak Orchard. | 43 22 | 78 12 | 1875.52 | + 3.77 | +1.10 | + 4.87 | F. Terry. | P. P., U. S. Eng's, No. 24, 1882. |
| Stoney Creek Station. | 43 23 | 73 51 | 1883.58 | +11.17 | +0.43 | +11.60 | V. Colvin. | Ad. and S. L. Sur., 1884. |
| Station south of Thurman. | 43 24 | 73 50 | 1883.59 | +11.50 | +0.43 | +11.93 | V. Colvin. | Ad. and S. L. Sur., 1884. |
| Piseco Lake, P. O. | 43 24 | 74 33 | 1883.60 | +11.02 | +0.43 | +11.45 | V. Colvin. | Ad. and S. L. Sur., 1884. |
| Oswego. | 43 25 | 76 34 | 1797.5 | + 3.00 | +5.08 | + 8.08 | S. De Witt. | MS. in C. and G. S. Office. |
| Warrensburgh. | 43 26 | 73 45 | 1838.5 | + 7.25 | +3.95 | +11.20 | ------ | Sill. Jour., Vol. 39, 1840. |
| Meyer's Hill. | 43 26 | 75 04 | 1883.54 | + 7.58* | +0.43 | + 8.01 | V. Colvin. | Ad. and S. L. Sur., 1884. |
| Thurman Depot. | 43 27 | 73 48 | 1883.58 | +11.33 | +0.43 | +11.76 | V. Colvin. | Ad. and S. L. Sur., 1884. |
| Near Warrensburgh. | 43 30 | 73 44 | 1883.60 | +11.00 | +0.43 | +11.43 | V. Colvin. | Ad. and S. L. Sur., 1884. |
| At the Glenn. | 43 33 | 73 51 | 1883.59 | +13.12 | +0.43 | +13.55 | V. Colvin. | Ad. and S. L. Sur., 1884. |

* Mean of two stations.

*Table of Observed Magnetic Declinations and Values reduced to the Year* 1890—Continued.

NEW YORK—Continued.

| Name of station. | φ | λ | t | D | ΔD | $D_{1890.0}$ | Observer. | Reference. |
|---|---|---|---|---|---|---|---|---|
| | ° ′ | ° ′ | | ° | ° | ° | | |
| Port Ontario. | 43 34 | 76 12 | 1874.72 | + 8.15 | +1.29 | + 9.44 | F. M. Towar. | P. P., U. S. Eng's, No. 24, 1882. |
| Horicon. | 43 36 | 73 45 | 1883.60 | +10.53 | +0.43 | +10.96 | V. Colvin. | Ad. and S. L. Sur., 1884. |
| Johnsburgh. | 43 36 | 73 57 | 1883.59 | +10.70 | +0.43 | +11.13 | V. Colvin. | Ad. and S. L. Sur., 1884. |
| West Canada Lakes. | 43 36 | 74 36 | 1772.5 | + 6.90 | +4.7 | +11.6 | ---------- | Ad. and S. L. Sur., 1884. |
| Gommer Hill. | 43 37 | 75 26 | 1883.54 | + 8.87 | +0.43 | + 9.30 | V. Colvin. | Ad. and S. L. Sur., 1884. |
| Starbuckville. | 43 38 | 73 45 | 1883.60 | +10.53 | +0.43 | +10.96 | V. Colvin. | Ad. and S. L. Sur., 1884. |
| Riverside. | 43 38 | 73 52 | 1883.59 | + 9.92 | +0.43 | +10.35 | V. Colvin. | Ad. and S. L. Sur., 1884. |
| Near Outlet of Shroon Lake. | 43 41 | 73 48 | 1883.59 | + 9.77 | +0.43 | +10.20 | V. Colvin. | Ad. and S. L. Sur., 1884. |
| Sandy Creek. | 43 42 | 76 12 | 1874.72 | − 7.83 | +1.29 | + 9.12 | F. Terry. | P. P., U. S. Eng's, No. 24, 1882. |
| Lowville. | 43 48 | 75 35 | 1821.5 | + 4.50 | +5.43 | + 9.93 | J. Clark. | MS. in C. and G. S. Office. |
| Stony Creek. | 43 49 | 76 16 | 1874.72 | + 8.38 | +1.29 | + 9.67 | J. Eisenmann. | P. P., U. S. Eng's, No. 24, 1882. |
| North Creek. | 43 50 | 73 58 | 1883.59 | +11.57 | +0.43 | +12.00 | V. Colvin. | Ad. and S. L. Sur., 1884. |
| Stony Island. | 43 52 | 76 20 | 1874.53 | + 6.30 | +1.30 | + 7.60 | J. Eisenmann. | P. P., U. S. Eng's, No. 24, 1882. |
| Snowshoe Bay. | 43 53 | 76 14 | 1874.68 | + 7.33 | +1.29 | + 8.62 | J. Eisenmann. | P. P., U. S. Eng's, No. 24, 1882. |
| Gallop Island. | 43 54 | 76 25 | 1874.59 | + 7.47 | +1.30 | + 8.77 | J. Eisenmann. | P. P., U. S. Eng's, No. 24, 1882. |
| Crown Point. | 43 55 | 73 27 | 1838.5 | + 8.78 | +4.38 | +13.16 | ---------- | Sill. Jour., Vol. 39, 1840. |
| Sacket's Harbor. | 43 57 | 76 07 | 1874.49 | + 9.77 | +1.30 | +11.07 | J. Eisenmann. | P. P., U. S. Eng's, No. 24, 1882. |
| Peninsula Point. | 43 58 | 76 16 | 1874.67 | + 8.28 | +1.29 | + 9.57 | J. R. Mayer. | P. P., U. S. Eng's, No. 24, 1882. |
| Near the mountain. | 44 01 | 73 50 | 1838.5 | + 8.27 | +4.38 | +12.65 | ---------- | Sill. Jour., Vol. 39, 1840. |
| Le Rayville. | 44 01 | 75 44 | 1826.44 | + 5.75 | +5.18 | +10.93 | ---------- | Ad. and S. L. Sur., 1886. |
| Crown Point. | 44 02 | 73 25 | 1879.5 | + 9.62 | +0.96 | +10.58 | V. Colvin. | Ad. Sur., 7th Rep. |
| West Moriah and Small Pond. | 44 02 | 73 39 | 1838.5 | + 7.16 | +4.38 | +11.54 | ---------- | Sill. Jour., Vol. 39, 1840. |
| East Moriah and Cedar Pt. | 44 03 | 73 30 | 1838.5 | + 9.82 | +4.38 | +14.20 | ---------- | Sill. Jour., Vol. 39, 1840. |
| Mount Dix. | 44 05 | 73 47 | 1879.5 | + 9.96 | +0.99 | +10.95 | V. Colvin. | Ad. Sur., 7th Rep. |

*Table of Observed Magnetic Declinations and Values reduced to the Year* 1890—Continued.

NEW YORK—Continued.

| Name of station. | φ | λ | t | D | ΔD | $D_{1890.0}$ | Observer. | Reference. |
|---|---|---|---|---|---|---|---|---|
| | ° ′ | ° ′ | | ° | ° | ° | | |
| Bald Peak. | 44 06 | 73 29 | 1879.5 | +11.99 | +0.99 | +12.98 | V. Colvin. | Ad. Sur., 7th Rep. |
| Mount Marcy. | 44 07 | 73 55 | 1879.5 | +10.71 | +0.90 | +11.61 | V. Colvin. | Ad. Sur., 7th Rep. |
| Jefferson Co. | 44 09 | 75 37 | 1794.60 | + 2.67 | +6.0 | + 8.7 | P. Pharoux. | Regents' Rep., 1869. |
| Keene Valley. | 44 10 | 73 46 | 1883.5 | +11.54 | +0.59 | +12.13 | V. Colvin. | Ad. and S. L. Sur., 1884. |
| Clear Pond. | 44 10 | 73 57 | 1883.73 | + 9.83 | +0.57 | +10.40 | V. Colvin. | Ad. and S. L. Sur., 1884. |
| Mt. Hurricane. | 44 14 | 73 42 | 1879.5 | + 9.15 | +0.99 | +10.14 | V. Colvin. | Ad. Sur., 7th Rep. |
| Moosehead Mountain. | 44 14 | 74 38 | 1883.64 | + 9.40 | +0.54 | + 9.94 | V. Colvin. | Ad. and S. L. Sur., 1884. |
| Plessis. | 44 16 | 75 55 | 1858.4 | + 7.58 | +2.78 | +10.36 | J. Clark. | MS. in C. and G. S. Office. |
| Upper Saranac Lake. | 44 19 | 74 15 | 1883.62 | +10.78 | +0.54 | +11.32 | V. Colvin. | Ad. and S. L. Sur., 1884. |
| Alexandria Bay. | 44 20 | 75 56 | 1872.71 | + 7.00 | +1.47 | + 8.47 | A. C. Lamson. | P. P., U. S. Eng's, No. 24, 1882. |
| Dial Mountain. | 44 21 | 73 49 | 1838.5 | + 8.34* | +4.02 | +12.36 | ---- ---------- | Sill. Jour., Vol. 39, 1840. |
| Wellesly Island. | 44 21 | 76 01 | 1873.62 | + 8.58 | +1.39 | + 9.97 | F. M. Towar. | P. P., U. S. Eng's, No. 24, 1882. |
| Whiteface Mountain. | 44 22 | 73 54 | 1879.5 | +10.99 | +0.99 | +11.98 | V. Colvin. | Ad. Sur., 7th Rep. |
| Rossie. | 44 22 | 75 43 | 1839.5 | + 6.72 | +4.43 | +11.15 | A. Hopkins. | Sill. Jour., Vol. 39, 1840. |
| Picnic Island. | 44 22 | 75 52 | 1872.76 | + 7.93 | +1.46 | + 9.39 | F. M. Towar. | P. P., U. S. Eng's, No. 24, 1882. |
| Bog Mountain. | 44 23 | 74 44 | 1883.64 | + 5.95 | +0.54 | + 6.49 | V. Colvin. | Ad. and S. L. Sur., 1884. |
| St. Regis Lakes. | 44 24 | 74 14 | 1883.63 | +10.18 | +0.54 | +10.72 | V. Colvin. | Ad, and S. L. Sur., 1884. |
| St. Regis Mountain. | 44 24 | 74 20 | 1879.5 | +10.52 | +0.92 | +11.44 | V. Colvin. | Ad. Sur., 7th Rep. |
| Munger at Raquette Station. | 44 25 | 74 45 | 1883.64 | +10.12 | +0.54 | +10.66 | V. Colvin. | Ad. and S. L. Sur., 1884. |
| Keeseville. | 44 28 | 73 32 | 1838.5 | + 8.67 | +4.02 | +12.69 | ---------- | Sill. Jour., Vol. 39, 1840. |
| Mt. Azure. | 44 28 | 74 28 | 1883.71 | + 9.65 | +0.54 | +10.19 | V. Colvin. | Ad. and S. L. Sur., 1884. |
| Chippewa Point. | 44 29 | 75 46 | 1872.63 | + 7.70 | +1.48 | + 9.18 | F. M. Towar. | P. P., U. S. Eng's, No. 24, 1882. |
| Colton Village. | 44 32 | 74 54 | 1883.64 | + 9.57 | +0.54 | +10.11 | V. Colvin. | Ad. and S. L. Sur., 1884. |
| Two miles N. E. of Oak Point. | 44 32 | 75 43 | 1872.63 | +11.00 | +1.48 | +12.48 | A. C. Lamson. | P. P., U. S. Eng's, No. 24, 1882. |
| Norway Mountain. | 44 34 | 73 41 | 1879.5 | +12.27 | +0.99 | +13.26 | V. Colvin. | Ad. Sur., 7th Rep. |
| Ogdensburgh. | 44 40† | 75 30† | 1838.5 | + 6.17 | +4.68 | +10.85 | ---------- | Regents' Rep., 1869. |

* Mean of two values. † Corrected.

*Table of Observed Magnetic Declinations and Values reduced to the Year* 1890—Continued.

NEW YORK—Continued.

| Name of station. | φ | λ | t | D | ΔD | $D_{1890.0}$ | Observer. | Reference. |
|---|---|---|---|---|---|---|---|---|
| | ° ′ | ° ′ | | ° | ° | ° | | |
| Four miles S. W. of Ogdensburgh. | 44 40 | 75 33 | 1871.77 | + 9.60 | +1.40 | +11.00 | A. C. Lamson. | P. P., U. S. Eng's, No. 24, 1882. |
| Lyon Mountain. | 44 42 | 73 52 | 1879.5 | +12.44 | +0.82 | +13.26 | V. Colvin. | Ad. Sur., 7th Rep. |
| Ragged Lake. | 44 42 | 74 00 | 1883.72 | +14.97 | +0.48 | +15.45 | V. Colvin. | Ad. and S. L. Sur., 1884. |
| Plattsburgh, N. E of breakwater. | 44 45 | 73 24 | 1870.76 | +10.87 | +1.58 | +12.45 | J. L. Gillespie. | P. P., U. S. Eng's, No. 24, 1882. |
| Rand Hill. | 44 46 | 73 36 | 1879.5 | +11.34 | +0.82 | +12.16 | V. Colvin. | Ad. Sur., 7th Rep. |
| La Motte. | 44 50 | 73 20 | 1879.5 | +13.36 | +0.82 | +14.18 | V. Colvin. | Ad. Sur., 7th Rep. |
| Malone, Low's Pinnacle. | 44 50 | 74 15 | 1883.63 | +12.47 | +0.48 | +12.95 | V. Colvin. | Ad. and S. L. Sur., 1884. |
| West Chazy. | 44 52 | 73 25 | 1838.5 | + 9.35 | +4.60 | +13.95 | ---------- | Sill. Jour., Vol. 39, 1840. |
| Goose Neck Island. | 44 55 | 75 07 | 1871.45 | + 9.65 | +1.43 | +11.08 | A. C. Lamson. | P. P., U. S. Eng's, No. 24, 1882. |
| St. Regis, Indian Village. | 44 59 | 74 39 | 1883.69 | +10.50 | +0.48 | +10.98 | V. Colvin. | Ad. and S. L. Sur., 1884. |
| Champlain, near Rouse's Point. | 45 00 | 73 26 | 1838.5 | + 9.50 | +4.60 | +14.10 | ---------- | Ad. and S. L. Sur., 1884. |
| Massena Point, Polly's Gut. | 45 00 | 74 46 | 1871.50 | +10.62 | +1.47 | +12.09 | A. C. Lamson. | P. P., U. S. Eng's, No. 24, 1882. |

NORTH CAROLINA.

Group 1.

| | | | | | | | | |
|---|---|---|---|---|---|---|---|---|
| Smithville, Fort Johnson. | 33 55 | 78 01 | 1887.20 | + 1.13 | +0.14 | + 1.27 | J. B. Baylor. | MS. in C. and G. S. Office. |
| Wilmington. | 34 14 | 77 57 | 1854.42 | — 1.22 | +2.19 | + 0.97 | G. W. Dean. | C. and G. S. Rep., 1881, App. 9. |
| Beaufort. | 34 43 | 76 40 | 1880.03 | + 1.74 | +0.54 | + 2.28 | J. B. Baylor. | C. and G. S. Rep., 1881, App. 9. |
| Portsmouth Island. | 35 04 | 76 03 | 1871.25 | + 2.37 | +1.08 | + 3.45 | A. T. Mosman. | C. and G. S. Rep., 1881, App. 9. |
| New Berne (S. V. S.). | 35 07 | 77 03 | 1887.22 | + 1.91 | ------ | + 2.27 | J. B. Baylor. | MS. in C. and G. S. Office. |
| Raleigh. | 35 47 | 78 38 | 1887.23 | + 1.30 | +0.14 | + 1.44 | J. B. Baylor. | MS. in C. and G. S. Office. |
| Bodies Island. | 35 48 | 75 32 | 1846.99 | + 1.22 | +2.48 | + 3.70 | C. O. Boutelle. | C. and G. S. Rep., 1881, App. 9. |
| Sand Island. | 35 50 | 75 40 | 1876.08 | + 2.98 | +0.77 | + 3.75 | E. Smith. | C. and G. S. Rep., 1881, App. 9. |
| Shellbank. | 36 04 | 75 44 | 1847.24 | + 1.75 | +2.47 | + 4.22 | C. O. Boutelle and G. Davidson. | C. and G. S. Rep., 1881, App. 9. |
| Stevenson's Point. | 36 06 | 76 11 | 1847.10 | + 1.66 | +2.48 | + 4.14 | C. O. Boutelle. | C. and G. S. Rep., 1881, App. 9. |

*Table of Observed Magnetic Declinations and Values reduced to the Year* 1890—Continued.

NORTH CAROLINA—Continued.

| Name of station. | φ | λ | t | D | ΔD | $D_{1890.0}$ | Observer. | Reference. |
|---|---|---|---|---|---|---|---|---|
| | ° ′ | ° ′ | | ° | ° | ° | | |
| Weldon. | 36 27 | 77 25 | 1887.24 | + 2.51 | +0.15 | + 2.66 | J. B. Baylor. | MS. in C. and G. S. Office. |
| Nottoway River, Riddicksville. | 36 32 | 76 56 | 1887.17 | + 2.50 | +0.15 | + 2.65 | C. H. Sinclair. | MS. in C. and G. S. Office. |
| N. C. and Va. Boundary, Knott Island. | 36 33 | 75 56 | 1887.06 | + 3.55 | +0.15 | + 3.70 | C. H. Sinclair. | MS. in C. and G. S. Office. |
| N. C. and Va. Boundary Station, NW. | 36 33 | 76 12 | 1886.99 | + 2.90 | +0.15 | + 3.05 | C. H. Sinclair. | MS. in C. and G. S. Office. |

Group 2.

| | | | | | | | | |
|---|---|---|---|---|---|---|---|---|
| Charlotte. | 35 14 | 80 46* | 1873.58 | — 1.06 | +0.93 | — 0.13 | F. E. Hilgard. | Nat. Acad. Sc. |
| Goldsborough. | 35 25 | 77 50 | 1875.49 | + 0.25 | +0.82 | + 1.07 | J. M. Poole. | Nat. Acad. Sc. |
| Wimble Shoals. | 35 34 | 75 24 | 1738.5 | + 4.00 | +0.50 | + 4.50 | ---------- | From a chart of the Shoals. |
| Asheville. | 35 35 | 82 30 | 1873.60 | — 1.97 | +0.91 | — 1.06 | F. E. Hilgard. | Nat. Acad. Sc. |
| Salisbury. | 35 40 | 80 20 | 1873.58 | — 0.87 | +0.93 | + 0.06 | F. E. Hilgard. | Nat. Acad. Sc. |
| Morgantown. | 35 47 | 81 30 | 1873.59 | — 1.18 | +0.91 | — 0.27 | F. E. Hilgard. | Nat. Acad. Sc. |
| Greensborough. | 36 04 | 79 40 | 1873.57 | — 0.72 | +0.93 | + 0.21 | F. E. Hilgard. | Nat. Acad. Sc. |

* Corrected.

NORTH DAKOTA.

Group 1.

| | | | | | | | | |
|---|---|---|---|---|---|---|---|---|
| Bismarck. | 46 46 | 100 47 | 1880.73 | —15.83 | +0.62 | —15.21 | J. B. Baylor. | C. and G. S. Rep., 1881, App. 9. |
| Jamestown. | 46 53 | 98 45 | 1880.70 | —13.51 | +0.62 | —12.89 | J. B. Baylor. | C. and G. S. Rep., 1881, App. 9. |
| Pembina. | 48 59 | 97 14 | 1880.69 | —12.61 | +0.62 | —11.99 | J. B. Baylor. | C. and G. S. Rep., 1881, App. 9. |

Group 2.

| | | | | | | | | |
|---|---|---|---|---|---|---|---|---|
| Near Fort Berthold. | 47 28 | 101 50 | 1860.5 | —18.97 | +1.48 | —17.49 | (W. F. Raynolds). | Expl. Exp., 1865. |
| Northwest Boundary. | 49 00 | 97 40 | 1872.5 | —15.00 | +0.88 | —14.12 | (W. J. Twining). | Rep. NW. Bound. Sur., 1878. |
| Northwest Boundary, near Pembina Mts. | 49 00 | 98 00 | 1872.5 | —15.17 | +0.88 | —14.29 | (W. J. Twining). | Rep. NW. Bound. Sur., 1878. |
| Northwest Boundary. | 49 00 | 98 10 | 1872.5 | —15.50 | +0.88 | —14.62 | (W. J. Twining). | Rep. NW. Bound. Sur., 1878. |
| Northwest Boundary. | 49 00 | 98 28 | 1872.5 | —15.50 | +0.88 | —14.62 | (W. J. Twining). | Rep. NW. Bound. Sur., 1878. |
| Northwest Boundary. | 49 00 | 98 33 | 1872.5 | —15.58 | +0.88 | —14.70 | (W. J. Twining). | Rep. NW. Bound. Sur., 1878. |

*Table of Observed Magnetic Declinations and Values reduced to the Year* 1890—Continued.

NORTH DAKOTA—Continued.

| Name of station. | $\varphi$ | $\lambda$ | $t$ | D | $\Delta$D | $D_{1890.0}$ | Observer. | Reference. |
|---|---|---|---|---|---|---|---|---|
| | ° ′ | ° ′ | | ° | ° | ° | | |
| Northwest Boundary. | 49 00 | 98 45 | 1872.5 | —15.25 | +0.88 | —14.37 | (W. J. Twining). | Rep. NW. Bound. Sur., 1878. |
| Northwest Boundary. | 49 00 | 98 55 | 1872.5 | —15.67 | +0.88 | —14.79 | (W. J. Twining). | Rep. NW. Bound. Sur., 1878. |
| Northwest Boundary. | 49 00 | 99 00 | 1872.5 | —15.75 | +0.88 | —14.87 | (W. J. Twining). | Rep. NW. Bound. Sur., 1878. |
| Northwest Boundary. | 49 00 | 99 05 | 1872.5 | —15.92 | +0.88 | —15.04 | (W. J. Twining). | Rep. NW. Bound. Sur., 1878. |
| Northwest Boundary. | 49 00 | 100 25 | 1873.6 | —16.67 | +0.82 | —15.85 | (W. J. Twining). | Rep. NW. Bound. Sur., 1878. |
| Northwest Boundary, near Bear Butte. | 49 00 | 100 30 | 1873.6 | —17.25 | +0.82 | —16.43 | (W. J. Twining). | Rep. NW. Bound. Sur., 1878. |
| Northwest Boundary. | 49 00 | 100 40 | 1873.6 | —17.17 | +0.82 | —16.35 | (W. J. Twining). | Rep. NW. Bound. Sur., 1878. |
| Northwest Boundary. | 49 00 | 101 40 | 1873.6 | —17.75 | +0.82 | —16.93 | (W. J. Twining). | Rep. NW. Bound. Sur., 1878. |
| Northwest Boundary. | 49 00 | 102 00 | 1873.6 | —18.00 | +0.82 | —17.18 | (W. J. Twining). | Rep. NW. Bound. Sur., 1878. |
| Northwest Boundary. | 49 00 | 102 15 | 1873.6 | —18.18 | +0.82 | —17.36 | (W. J. Twining). | Rep. NW. Bound. Sur., 1878. |
| Northwest Boundary, Woodend. | 49 00 | 103 00 | 1873.6 | —18.00 | +0.82 | —17.18 | (W. J. Twining). | Rep. NW. Bound. Sur., 1878. |
| Northwest Boundary. | 49 00 | 103 30 | 1873.7 | —18.13 | +0.82 | —17.31 | (W. J. Twining). | Rep. NW. Bound. Sur., 1878. |

OHIO.

Group 1.

| | | | | | | | | |
|---|---|---|---|---|---|---|---|---|
| South Point. | 38 25 | 82 35 | 1864.14 | — 1.88 | +1.59 | — 0.29 | A. T. Mosman. | C. and G. S. Rep., 1881, App. 9. |
| Cincinnati Observatory (S. V. S.). | 39 08 | 84 25 | 1888.58 | — 1.97 | ----- | — 1.80 | J. B. Baylor. | MS. in C. and G. S. Office. |
| Athens (S. V. S.). | 39 20 | 82 02 | 1880.93 | — 0.68 | ------ | — 0.14 | J. B. Baylor. | C. and G. S. Rep., 1881, App. 9. |
| Columbus. | 39 58 | 83 00 | 1871.76 | — 1.34 | +1.15 | — 0.19 | A. T. Mosman. | C. and G. S. Rep., 1881, App. 9. |
| Cleveland (S. V. S.). | 41 30 | 81 42 | 1888.55 | + 2.06 | ------ | + 1.92 | J. B. Baylor. | MS. in C. and G. S. Office. |

Group 2.

| | | | | | | | | |
|---|---|---|---|---|---|---|---|---|
| Portsmouth. | 38 48 | 82 50 | 1805.5 | — 5.00 | +3.56 | — 1.44 | Public Surveyor. | Sill. Jour., Vol. 34, 1838. |
| Gallipolis. | 38 53 | 82 07 | 1838.5 | — 2.58 | +2.92 | + 0.34 | J. Fletcher. | Sill. Jour., Vol. 39, 1840. |

*Table of Observed Magnetic Declinations and Values reduced to the Year* 1890—Continued.

OHIO—Continued.

| Name of station. | φ | λ | t | D | ΔD | $D_{1890.0}$ | Observer. | Reference. |
|---|---|---|---|---|---|---|---|---|
| | ° ′ | ° ′ | | ° | ° | ° | | |
| Mouth of Miami River. | 39 08 | 84 45 | 1810.5 | — 5.17 | +3.21 | — 1.96 | J. Mansfield. | Sill. Jour., Vol. 34, 1838. |
| Jackson. | 39 15 | 82 42 | 1838.5 | — 3.17 | +2.92 | — 0.25 | O. N. Tyson. | Sill. Jour., Vol. 39, 1840. |
| Chillicothe. | 39 21 | 82 54 | 1835.5 | — 3.25 | +3.03 | — 0.22 | A. Burne. | Sill. Jour., Vol. 39, 1840. |
| Near Marietta (S.V. S.). | 39 28 | 81 26 | 1838.5 | — 1.54 | ------ | + 0.79 | E. Loomis and B. E. Stone. | Sill. Jour., Vol. 34, 1838, and Vol. 39, 1840. |
| Wilmington. | 39 28 | 83 42 | 1838.5 | — 4.08 | +2.76 | — 1.32 | D. Wickersham. | Sill. Jour., Vol. 39, 1840. |
| Oxford. | 39 30 | 84 38 | 1845.6 | — 4.83 | +2.47 | — 2.36 | J. Locke. | C. S. Rep., 1855. |
| Springboro. | 39 31 | 84 16 | 1838.5 | — 4.07 | +2.76 | — 1.31 | E. Baily. | Sill. Jour., Vol. 39, 1840. |
| Washington. | 39 34 | 83 21 | 1838.5 | — 3.10 | +2.92 | — 0.18 | J. Bell. | Sill. Jour., Vol. 39, 1840. |
| Carrollton, Montgomery Co. | 39 38 | 84 09 | 1845.7 | — 4.76 | +2.46 | — 2.30 | J. Locke. | C. S. Rep., 1855. |
| Springfield. | 39 54 | 83 47 | 1835.5 | — 4.50 | +2.97 | — 1.53 | —— Dutton. | Whittlesey MS. |
| New Madison. | 39 56 | 84 37 | 1838.5 | — 4.85 | +2.76 | — 2.09 | J. Jaqua. | Sill. Jour., Vol. 39, 1840. |
| Columbus. | 39 57 | 82 59 | 1874.63 | — 1.20 | +0.96 | — 0.24 | F. E. Hilgard. | Nat. Acad. Sc. |
| Batesville. | 39 58 | 81 11 | 1838.5 | — 1.37 | +3.10 | + 1.73 | M. Atkinson. | Sill. Jour., Vol. 39, 1840. |
| Zanesville. | 39 58 | 82 04 | 1838.5 | — 2.50 | +3.10 | + 0.60 | J. Boyle. | Sill. Jour., Vol. 39, 1840. |
| Saint Clairsville. | 40 10 | 80 52 | 1838.5 | — 2.52 | +3.10 | + 0.58 | J. C. Moore. | Sill. Jour., Vol. 39, 1840. |
| Tuscarawas. | 40 24 | 81 50 | 1874.63 | + 0.33 | +0.87 | + 1.20 | F. E. Hilgard. | Nat. Acad. Sc. |
| Coshocton. | 40 28 | 81 57 | 1838.5 | — 1.50 | +2.98 | + 1.48 | J. W. Sweeney. | Sill. Jour., Vol. 39, 1840. |
| Dover. | 40 31 | 81 29 | 1838.5 | — 1.83 | +2.98 | + 1.15 | H. V. Beeson. | Sill. Jour., Vol. 39, 1840. |
| Marion. | 40 35 | 83 09 | 1838.5 | — 3.28 | +2.88 | — 0.40 | S. Holmes. | Sill. Jour., Vol. 39, 1840. |
| Carrollton, Carroll Co. | 40 36 | 81 09 | 1838.5 | — 0.50 | +2.98 | + 2.48 | —— Van Brown. | Sill. Jour., Vol. 39, 1840. |
| Sandy. | 40 37 | 81 28 | 1810.5 | — 2.17 | +3.68 | + 1.51 | E. Buckingham. | Sill. Jour., Vol. 39, 1840. |
| Kenton. | 40 39 | 83 37 | 1838.5 | — 5.28 | +2.88 | — 2.40 | J. H. Ross. | Sill. Jour., Vol. 39, 1840. |
| Wooster. | 40 49 | 81 58 | 1840.5 | — 1.78 | +2.76 | + 0.98 | C. W. Christmas. | Sill. Jour., Vol. 39, 1840. |
| New Lisbon. | 40 50 | 80 49 | 1880.5 | + 1.48 | +0.63 | + 2.11 | J. B. Strawn. | MS. in C. and G. S. Office. |
| Forest. | 40 50 | 83 28 | 1874.64 | — 2.30 | +0.82 | — 1.48 | F. E. Hilgard. | Nat. Acad. Sc. |

*Table of Observed Magnetic Declinations and Values reduced to the Year* 1890—Continued.

OHIO—Continued.

| Name of station. | φ | λ | t | D | ΔD | $D_{1890.0}$ | Observer. | Reference. |
|---|---|---|---|---|---|---|---|---|
| | ° ′ | ° ′ | | ° | ° | ° | | |
| Ohio and Pa. State Line, 75 miles south of Lake Erie. | 40 53 | 80 31* | 1880.4 | + 1.92 | +0.64 | +2.56 | J. B. Strawn. | MS. in C. and G. S. Office. |
| Chippeway. | 40 55 | 81 48 | 1810.5 | — 2.60 | +3.68 | +1.08 | J. Mansfield. | Sill. Jour., Vol. 34, 1838. |
| Kalida. | 40 59 | 84 14 | 1838.5 | — 3.00 | +2.88 | —0.12 | E. B. Fitch. | Sill. Jour., Vol. 39, 1840. |
| Western Reserve, S. E. corner of Poland. | 41 00 | 80 31* | 1810.5 | — 1.35 | +3.56 | +2.21 | J. Mansfield. | Sill. Jour., Vol. 34, 1838. |
| Canfield. | 41 00 | 80 50 | 1810.5 | — 1.62 | +3.56 | +1.94 | J. Mansfield. | Sill. Jour., Vol. 34, 1838. |
| Berlin. | 41 00 | 81 03 | 1810.5 | — 1.80 | +3.56 | +1.76 | J. Mansfield. | Sill. Jour., Vol. 34, 1838. |
| Atwater. | 41 00 | 81 21 | 1810.5 | — 2.07 | +3.56 | +1.49 | J. Mansfield. | Sill. Jour., Vol. 34, 1838. |
| Portage. | 41 00 | 81 31 | 1838.5 | — 1.25 | +2.82 | +1.57 | —— Mallison. | Sill. Jour., Vol. 39, 1840. |
| Suffield. | 41 00 | 81 34 | 1810.5 | — 2.37 | +3.56 | +1.19 | J. Mansfield. | Sill. Jour., Vol. 34, 1838. |
| Coventry. | 41 00 | 81 48 | 1810.5 | — 2.32 | +3.56 | +1.24 | J. Mansfield. | Sill. Jour., Vol. 34, 1838. |
| Norton. | 41 00 | 81 53 | 1810.5 | — 2.50 | +3.56 | +1.06 | J. Mansfield. | Sill. Jour., Vol. 34, 1838. |
| Seneca. | 41 00 | 83 20 | 1810.5 | — 3.95 | +3.68 | —0.27 | J. Mansfield. | Sill. Jour., Vol. 34, 1838. |
| Tallmadge, Summit Co. | 41 06 | 81 28 | 1806 | — 1.00 | +3.71 | +2.71(?) | Seth S. Ensign. | Whittlesey MS. |
| Akron, Summit Co., 4 miles north of. | 41 10 | 81 33 | 1797.54 | — 2.03 | +3.81 | +1.78 | M. Warren. | Whittlesey MS. |
| Youngstown, Mahoning Co. | 41 12 | 80 46 | 1796.6 | — 1.45 | +3.52 | +2.07 | A. Soofford. | Whittlesey MS. |
| Brookfield. | 41 14 | 80 37 | 1837.5 | — 0.67 | +2.86 | +2.19 | G. Boyse. | Sill. Jour., Vol. 39, 1840. |
| Braceville. | 41 14 | 81 03 | 1838.5 | — 0.83 | +2.82 | +1.99 | F. E. Stowe. | Sill. Jour., Vol. 39, 1840. |
| Hudson. | 41 15 | 81 26 | 1840.5 | — 0.87 | +2.74 | +1.87 | E. Loomis. | C. S. Rep., 1855. |
| Defiance. | 41 15 | 84 23 | 1810.5 | — 4.50 | +3.68 | —0.82 | J. Mansfield. | Sill. Jour., Vol. 34, 1838. |
| Streetsborough, Portage Co. | 41 17 | 81 22 | 1821.4 | — 2.08 | +3.38 | +1.30 | R. Cowles. | Whittlesey MS. |
| Flat Rock. | 41 18 | 84 12 | 1838.5 | — 3.23 | +2.88 | —0.35 | W. C. Brownell. | Sill. Jour., Vol. 39, 1840. |
| Lower Sandusky. | 41 21 | 83 09 | 1838.5 | — 2.80 | +2.96 | +0.16 | —— De Reeves. | Sill. Jour., Vol. 39, 1840. |

* Corrected.

*Table of Observed Magnetic Declinations and Values reduced to the Year* 1890—Continued.

OHIO—Continued.

| Name of station. | φ | λ | t | D | ΔD | $D_{1890.0}$ | Observer. | Reference. |
|---|---|---|---|---|---|---|---|---|
| | ° ′ | ° ′ | | ° | ° | ° | | |
| Aurora, north line, Portage Co. | 41 23 | 81 18 | 1796.66 | − 1.37 | +3.52 | + 2.15 | Seth Pease. | Whittlesey MS. |
| Huron Harbor and River. | 41 24 | 82 33 | 1845.5 | − 2.17 | +2.29 | + 0.12 | J. H. Simpson. | P. P., U. S. Eng's, No. 24, 1882. |
| Huron. | 41 25 | 82 35 | 1877.37 | − 0.48 | +0.60 | + 0.12 | F. Terry. | P. P., U. S. Eng's, No. 24, 1882. |
| Vermillion. | 41 26 | 82 21 | 1876.80 | − 0.47 | +0.63 | + 0.16 | F. M. Towar. | P. P., U. S. Eng's, No. 24, 1882. |
| Sandusky. | 41 27 | 82 45 | 1872.42 | − 0.92 | +0.86 | − 0.06 | A. C. Lamson. | P. P., U. S. Eng's, No. 24, 1882. |
| Kinsman, Ashtabula Co., north line. | 41 28 | 80 37 | 1796.63 | − 1.50 | +3.91 | + 2.41 | Seth Pease. | Whittlesey MS. |
| Black River. | 41 28 | 82 10 | 1876.82 | − 0.28 | +0.63 | + 0.35 | F. Terry. | P. P., U. S. Eng's, No. 24, 1882. |
| On Pennsylvania Line, 34 miles north. | 41 29 | 80 31* | 1796.59 | − 1.62 | +3.91 | + 2.29 | M. Halley. | Whittlesey MS. |
| Mesopotamia, Trumbull Co., north line. | 41 29 | 81 00 | 1796.63 | − 2.37 | +3.52 | + 1.15 | Seth Pease. | Whittlesey MS. |
| Newberry, Geauga Co., north line. | 41 29 | 81 18 | 1796.64 | − 1.33 | +3.52 | + 2.19 | Seth Pease. | Whittlesey MS. |
| Rocky River. | 41 29 | 81 52 | 1876.75 | + 0.18 | +0.63 | + 0.81 | F. M. Towar. | P. P., U. S. Eng's, No. 24, 1882. |
| Near Cedar Point Light, Sandusky. | 41 30 | 82 40 | 1862.5 | − 1.65 | +1.38 | − 0.27 | W. H. Hearding. | P. P., U. S. Eng's, No. 24, 1882. |
| Sand Point, Sandusky. | 41 30 | 82 43 | 1877.41 | − 0.62 | +0.59 | − 0.03 | A. C. Lamson. | P. P., U. S. Eng's, No. 24, 1882. |
| Rapids of Maumee. | 41 30 | 83 30 | 1810.5 | − 2.80 | +3.68 | + 0.88 | J. Mansfield. | Sill. Jour., Vol. 34, 1838. |
| Avon Point. | 41 31 | 82 01 | 1876.77 | + 0.60 | +0.63 | + 1.23 | F. M. Towar. | P. P., U. S. Eng's, No. 24, 1882. |
| Port Clinton. | 41 31 | 82 58 | 1877.54 | − 0.78 | +0.60 | − 0.18 | F. Terry. | P. P., U. S. Eng's, No. 24, 1882. |
| Mayfield, Cuyahoga Co., SE. corner. | 41 32 | 81 26 | 1796.66 | − 1.05 | +3.82 | + 2.77 | Seth Pease. | Whittlesey MS. |
| Euclid. | 41 34 | 81 34 | 1876.7 | + 1.17 | +0.64 | + 1.81 | F. Terry. | P. P., U. S. Eng's, No. 24, 1882. |
| Chardon. | 41 35 | 81 15 | 1838.5 | − 0.25 | +2.63 | + 2.38 | R. Cowles. | Sill. Jour., Vol. 39, 1840. |
| Catawba Island. | 41 35 | 82 50 | 1877.53 | − 0.67 | +0.60 | − 0.07 | A. C. Lamson. | P. P., U. S. Eng's, No. 24, 1882. |
| Kelley's Island. | 41 36 | 82 44 | 1877.46 | − 0.65 | +0.59 | − 0.06 | A. C. Lamson. | P. P., U. S. Eng's, No. 24, 1882. |
| Locust Point. | 41 36 | 83 06 | 1877.55 | − 0.67 | +0.66 | − 0.01 | F. M. Towar. | P. P., U. S. Eng's, No. 24, 1882. |

* Corrected.

*Table of Observed Magnetic Declinations and Values reduced to the Year* 1890—Continued.

OHIO—Continued.

| Name of station. | φ | λ | t | D | ΔD | $D_{1890.0}$ | Observer. | Reference. |
|---|---|---|---|---|---|---|---|---|
| | ° ′ | ° ′ | | ° | ° | ° | | |
| Bass Islands. | 41 39 | 82 44 | 1846.5 | — 2.38 | +2.28 | — 0.10 | (Chart). | U. S. Sur. N. and NW. Lakes. |
| Green Island. | 41 39 | 82 52 | 1845.64 | — 2.57 | +2.32 | — 0.25 | J. C. Woodruff. | P. P., U. S. Eng's, No. 24, 1882. |
| Willoughby. | 41 40 | 81 26 | 1876.70 | + 1.85 | +0.64 | + 2.49 | F. M. Towar. | P. P., U. S. Eng's, No. 24, 1882. |
| Willoughby, Lake Co. | 41 40 | 81 29 | 1796.7 | — 1.83 | +3.82 | + 1.99 | M. Halley. | Whittlesey MS. |
| Toledo. | 41 40 | 83 34 | 1877.64 | — 0.68 | +0.66 | — 0.02 | F. Terry and F. M. Towar. | P. P., U. S. Eng's, No. 24, 1882. |
| Kirtland, Lake Co., N. E. corner. | 41 41 | 81 21 | 1796.66 | — 1.00 | +3.82 | + 2.82 | Seth Pease. | Whittlesey MS. |
| North Bass Island. | 41 42 | 82 48 | 1877.40 | — 1.22 | +0.60 | — 0.62 | F. M. Towar. | P. P., U. S. Eng's, No. 24, 1882. |
| Mouth of Maumee River, east side. | 41 42 | 83 26 | 1862.64 | — 1.58 | +1.56 | — 0.02 | W. H. Hearding. | P. P., U. S. Eng's, No. 24, 1882. |
| Bloomfield. | 41 43 | 81 00 | 1796.63 | — 2.00 | +3.91 | + 1.91 | Seth Pease. | Whittlesey MS. |
| Mentor, Lake Co. | 41 43 | 81 22 | 1796.66 | — 1.83 | +3.82 | + 1.99 | M. Halley. | Whittlesey MS. |
| Cedar Point, Maumee Bay. | 41 43 | 83 20 | 1877.55 | + 0.17 | +0.66 | + 0.83 | A. C. Lamson. | P. P., U. S. Eng's, No. 24, 1882. |
| Cedar Point, Maumee Bay. | 41 43 | 83 31 | 1844.5 | — 2.27 | +2.43 | + 0.16 | J. H. Simpson. | P. P., U. S. Eng's, No. 24, 1882. |
| West Sister Island. | 41 44 | 83 06 | 1847.5 | — 2.33 | +2.27 | — 0.06 | (Chart). | U. S. Sur. N. and NW. Lakes. |
| Fairport. | 41 45 | 81 16 | 1876.70 | + 2.00 | +0.64 | + 2.64 | A. C. Lamson. | P. P., U. S. Eng's, No. 24, 1882. |
| Fourteen miles south of Lake Erie. | 41 47 | 80 31* | 1796.5 | — 0.88 | +3.91 | + 3.03 | A. Porter. | Whittlesey MS. |
| Denmark. | 41 47 | 80 45 | 1796.69 | — 1.50 | +3.91 | + 2.41 | M. Halley. | Whittlesey MS. |
| East Sister Isle. | 41 49 | 82 51 | 1847.5 | — 2.30 | +2.22 | — 0.08 | ---------- | C. S. Rep., 1856. |
| Madison. | 41 50 | 81 02 | 1876.47 | + 1.98 | +0.64 | + 2.62 | F. M. Towar. | P. P., U. S. Eng's, No. 24, 1882. |
| On Pennsylvania Line, 60 miles north. | 41 52 | 80 31* | 1796.60 | — 1.88 | +3.82 | + 1.94 | M. Halley. | Whittlesey MS. |
| Red Creek. | 41 53 | 80 51 | 1876.64 | + 2.00 | +0.75 | + 2.75 | A. C. Lamson. | P. P., U. S. Eng's, No. 24, 1882. |
| Ashtabula. | 41 55 | 80 48 | 1876.47 | + 1.77 | +0.75 | + 2.52 | A. C. Lamson. | P. P., U. S. Eng's, No. 24, 1882. |
| North Ringsville. | 41 56 | 80 41 | 1876.46 | + 1.27 | +0.75 | + 2.02 | F. M. Towar. | P. P., U. S. Eng's, No. 24, 1882. |
| Conneaut. | 41 58 | 80 32 | 1865.5 | —0.83(?) | +1.64 | +0.81(?) | ---------- | U. S. Sur. N. and NW. Lakes. |

* Corrected.

*Table of Observed Magnetic Declinations and Values reduced to the Year* 1890—Continued.

OREGON.

Group 1.

| Name of station. | φ | λ | t | D | ΔD | $D_{1890.0}$ | Observer. | Reference. |
|---|---|---|---|---|---|---|---|---|
| | ° ′ | ° ′ | | ° | ° | ° | | |
| Jacksonville. | 42 18 | 122 58 | 1881.54 | —17.41 | +0.02 | —17.39 | J. S. Lawson. | C. and G. S. Rep., 1881, App. 9. |
| Ewing Harbor. | 42 44 | 124 30 | 1851.89 | —18.50 | —0.75 | —19.25 | G. Davidson. | C. and G. S. Rep., 1881, App. 9. |
| Canyonville. | 42 54 | 123 18 | 1881.55 | —17.81 | +0.02 | —17.79 | J. S. Lawson. | C. and G. S. Rep., 1881, App. 9. |
| Coos Bay. | 43 24 | 124 17 | 1863.53 | —18.62 | —0.52 | —19.14 | J. S. Lawson. | C. and G. S. Rep., 1881, App. 9. |
| Oakland. | 43 26 | 123 18 | 1881.56 | —19.69 | +0.02 | —19.67 | J. S. Lawson. | C. and G. S. Rep., 1881, App. 9. |
| Ten Mile Knoll. | 43 53 | 124 09 | 1887.45 | —20.87(?) | —0.02 | —20.89(?) | E. F. Dickins. | MS. in C. and G. S. Office. |
| Cannery Hill. | 44 00 | 124 07 | 1887.47 | —21.40(?) | —0.02 | —21.42(?) | E. F. Dickins. | MS. in C. and G. S. Office. |
| Eugene. | 44 03 | 123 00 | 1881.56 | —20.80 | +0.02 | —20.78 | J. S. Lawson. | C. and G. S. Rep., 1881, App. 9. |
| Yaquina. | 44 36 | 124 00 | 1888.36 | —20.30 | —0.02 | —20.32 | R. A. Marr. | MS. in C. and G. S. Office. |
| Albany. | 44 39 | 123 02 | 1881.57 | —21.70 | +0.05 | —21.65 | J. S. Lawson. | C. and G. S. Rep., 1881, App. 9. |
| Yaquina Point, Lt. House. | 44 40 | 124 04 | 1885.33 | —20.84 | —0.04 | —20.88 | F. Morse (G. Davidson). | MS. in C. and G. S. Office. |
| Salem. | 44 56 | 122 58 | 1881.58 | —19.97 | +0.05 | —19.92 | J. S. Lawson. | C. and G. S. Rep., 1881, App. 9. |
| Portland. | 45 31 | 122 41 | 1887.97 | —21.86 | +0.02 | —21.84 | E. Smith and R. A. Marr. | MS. in C. and G. S. Office. |
| Three Mile Creek, near Dalles. | 45 39 | 120 58 | 1881.78 | —21.05 | +0.07 | —20.98 | J. S. Lawson. | C. and G. S. Rep., 1881, App. 9. |
| Blalock. | 45 44 | 120 15 | 1881.77 | —20.35 | +0.07 | —20.28 | J. S. Lawson. | C. and G. S. Rep., 1881, App. 9. |
| Saint Helen. | 45 52 | 122 48 | 1881.62 | —19.13 | +0.05 | —19.08 | J. S. Lawson. | C. and G. S. Rep., 1881, App. 9. |
| Umatilla. | 45 57 | 119 20 | 1881.76 | —21.54 | +0.09 | —21.45 | J. S. Lawson. | C. and G. S. Rep., 1881, App. 9. |
| Rainier. | 46 05 | 122 56 | 1886.50 | —23.75 | —0.02 | —23.77 | G. Davidson. | MS. in C. and G. S. Office. |
| Astoria. | 46 12 | 123 50 | 1881.61 | —22.44 | —0.18 | —22.62 | J. S. Lawson. | C. and G. S. Rep., 1881, App. 9. |

Group 2.

| | | | | | | | | |
|---|---|---|---|---|---|---|---|---|
| Canyonville. | 42 54 | 123 18 | 1885.5 | —19.4* | ------ | ------ | W. Thiel. | MS. in C. and G. S. Office. |
| Camp Harney. | 43 00 | 119 00 | 1876.1 | —18.38 | +0.02 | —18.36 | R. P. P. Wainwright. | Rep. Ch. of Eng's, 1876. |

* Local deflection.

*Table of Observed Magnetic Declinations and Values reduced to the Year* 1890—Continued.

OREGON—Continued.

| Name of station. | φ | λ | t | D | ΔD | $D_{1890.0}$ | Observer. | Reference. |
|---|---|---|---|---|---|---|---|---|
| | ° ′ | ° ′ | | ° | ° | ° | | |
| Cape Blanco, near and north of. | 43 06 | 124 18 | 1792.31 | —16.0 | —3.7 | —19.7 | G. Vancouver. | Hansteen's Mag. der Erde, 1819. |
| Lake Whatumpi. | 43 16 | 119 15 | 1859.51 | —18.17 | —0.16 | —18.33 | J. Dixon. | Sen. Pub. Doc., Vol. 9, 1859–'60. |
| Stillwater Slough. | 43 25 | 118 48 | 1859.52 | —18.17 | —0.16 | —18.33 | J. Dixon. | Sen. Pub. Doc., Vol. 9, 1859–'60. |
| Oakland. | 43 26 | 123 18 | 1888.5 | —19.62 | +0.01 | —19.61 | W. Thiel. | MS. in C. and G. S. Office. |
| Surprise Creek. | 43 37 | 118 38 | 1859.52 | —18.42 | —0.16 | —18.58 | J. Dixon. | Sen. Pub. Doc., Vol. 9, 1859–'60. |
| Ford of Owyhee River. | 43 47 | 116 58 | 1859.71 | —18.07 | —0.10 | —18.17 | J. Dixon. | Sen. Pub. Doc., Vol. 9, 1859–'60. |
| Malheur River, left bank. | 43 49 | 117 20 | 1859.54 | —18.25 | —0.10 | —18.35 | J. Dixon. | Sen. Pub. Doc., Vol. 9, 1859–'60. |
| Rock Creek Cañon. | 43 56 | 118 07 | 1859.53 | —18.50 | —0.16 | —18.66 | J. Dixon. | Sen. Pub. Doc., Vol. 9, 1859–'60. |
| Crooked River Cañon. | 44 03 | 120 00 | 1859.49 | —18.67 | —0.30 | —18.97 | J. Dixon. | Sen. Pub. Doc., Vol. 9, 1859–'60. |
| Birch Creek, Snake River. | 44 16 | 117 26 | 1859.73 | —18.15 | —0.15 | —18.30 | J. Dixon. | Sen. Pub. Doc., Vol. 9, 1859–'60. |
| Willow Creek. | 44 27 | 120 53 | 1859.47 | —18.92 | —0.30 | —19.22 | J. Dixon. | Sen. Pub. Doc., Vol. 9, 1859–'60. |
| Cape Foulweather, near. | 44 42 | 124 07 | 1792.31 | —18.00 | —4.1 | —22.1 | G. Vancouver. | Hansteen's Mag. der. Erde, 1819. |
| Crossing of Des Chutes. | 44 47 | 121 00 | 1859.44 | —19.25 | —0.40 | —19.65 | J. Dixon. | Sen. Pub. Doc., Vol. 9, 1859–'60. |
| Oak Grove Creek. | 45 06 | 121 15 | 1859.44 | —19.33 | —0.40 | —19.73 | J. Dixon. | Sen. Pub. Doc., Vol. 9, 1859–'60. |
| Near Cape Lookout. | 45 20 | 124 00 | 1789.51 | —16.08 | —4.6 | —20.7 | J. Meares. | Meares' Narrative. |
| Grande Ronde Valley | 45 16 | 117 43 | 1859.75 | —18.33 | —0.25 | —18.58 | J. Dixon. | Sen. Pub. Doc., Vol. 9, 1859–'60. |
| Grande Ronde River. | 45 20 | 117 57 | 1859.75 | —19.00 | —0.25 | —19.25 | J. Dixon. | Sen. Pub. Doc., Vol. 9, 1859–'60. |
| Lee's Encampment, Blue Mountains. | 45 33 | 118 21 | 1859.75 | —19.33 | —0.25 | —19.58 | J. Dixon. | Sen. Pub. Doc., Vol. 9, 1859–'60. |
| Fort Dallas, near Three Mile Creek. | 45 34 | 121 06 | 1859.42 | —19.75 | —0.40 | —20.15 | J. Dixon. | Sen. Pub. Doc., Vol. 9, 1859–'60. |
| Umatilla River, near McKay's Agency. | 45 41 | 118 40 | 1859.77 | —20.04 | —0.25 | —20.29 | J. Dixon. | Sen. Pub. Doc., Vol. 9, 1859–'60. |

PENNSYLVANIA. Group 1.

| | | | | | | | | |
|---|---|---|---|---|---|---|---|---|
| Girard College, Philadelphia (S. V. S.). | 39 58 | 75 10 | 1884.69 | + 6.36 | ------ | + 6.97 | E. Smith. | MS. in C. and G. S. Office. |
| Yard. | 39 58 | 75 23 | 1854.82 | + 6.70 | +2.59 | + 9.29 | J. E. Hilgard. | C. and G. S. Rep., 1881, App. 9. |

*Table of Observed Magnetic Declinations and Values reduced to the Year* 1890—Continued.

PENNSYLVANIA—Continued.

| Name of station. | φ | λ | t | D | ΔD | $D_{1890.0}$ | Observer. | Reference. |
|---|---|---|---|---|---|---|---|---|
| | ° ′ | ° ′ | | ° | ° | ° | | |
| Johnson's Tavern. | 40 00 | 79 48 | 1862.58 | + 1.23 | +1.83 | + 3.06 | C. A. Schott. | C. and G. S. Rep., 1881, App. 9. |
| Bristol, Vanuxem. | 40 07 | 74 53 | 1846.52 | + 4.46 | +3.11 | + 7.57 | J. Locke. | C. and G. S. Rep., 1881, App. 9. |
| Harrisburg (S.V.S.). | 40 16 | 76 53 | 1885.63 | + 5.36 | ------ | + 5.52 | J. B. Baylor. | MS. in C. and G. S. Office. |
| Allegheny Observatory (S. V. S.). | 40 28 | 80 01 | 1885.65 | + 2.93 | ------ | + 3.06 | J. B. Baylor. | MS. in C. and G. S. Office. |
| Lehigh University, Bethlehem (S.V.S). | 40 37 | 75 23* | 1874.47 | + 5.32 | ------ | + 6.66 | T. C. Hilgard. | C. and G. S. Rep., 1881, App. 9. |
| Williamsport. | 41 14 | 77 02 | 1862.62 | + 4.43 | +2.02 | + 6.45 | C. A. Schott. | C. and G. S. Rep., 1881, App. 9. |
| Erie, Marine Hospital (S. V. S.). | 42 09 | 80 05 | 1885.70 | + 3.14 | ------ | + 3.62 | J. B. Baylor. | MS. in C. and G. S. Office. |

Group 2.

| | | | | | | | | |
|---|---|---|---|---|---|---|---|---|
| Sylvan. | 39 43 | 77 03 | 1888.4 | + 4.00 | +0.13 | + 4.13 | A. S. Winger. | MS. in C. and G. S. Office. |
| Irwin's Mill, near Mercersburg. | 39 47 | 77 56 | 1840.65 | + 0.91 | +3.46 | + 4.37 | A. D. Bache. | C. S. Rep., 1862. |
| Gettysburg. | 39 49 | 77 15 | 1866.6 | + 3.50 | +1.79 | + 5.29 | County Surveyors. | Rep. S. of I. A., 1876. |
| West Boundary of State. | 39 51 | 80 31* | 1786.5 | — 2.17 | +3.12 | + 0.95 | A. Ellicott. | Sill. Jour., Vol. 34, 1838. |
| Uniontown, Fayette Co. | 39 54 | 79 43 | 1884.28 | + 3.30 | +0.42 | + 3.72 | A. J. Gilmore. | Rep. S. of I. A., 1885. |
| Waynesburg. | 39 54 | 80 12 | 1877.8 | + 2.17 | +0.77 | + 2.94 | County Surveyors. | Rep. S. of I. A., 1877. |
| Fulton Co. | 39 55† | 78 00† | 1885.85 | + 4.17 | +0.35 | + 4.52 | J. Lake. | Rep. S. of I. A., 1885. |
| Chambersburg (S. V. S.). | 39 56 | 77 39 | 1889.3 | + 4.08 | ------ | + 4.25 | County Surveyors. | MS. in C. and G. S. Office. |
| Westchester. | 39 57 | 75 40 | 1878.3 | + 5.87 | +0.91 | + 6.78 | County Surveyors. | Rep. S. of I. A., 1878. |
| York. | 39 58 | 76 44 | 1876.9 | + 4.90 | +0.66 | + 5.56 | County Surveyors. | Rep. S. of I. A., 1876. |
| West Boundary of State. | 39 59 | 80 31* | 1786.5 | — 1.20 | +3.12 | + 1.92 | A. Ellicott. | Sill. Jour., Vol. 34, 1838. |
| Bedford, Bedford Co. | 40 01 | 78 30 | 1883.3 | + 3.57 | +0.49 | + 4.06 | County Surveyors. | Rep. S. of I. A., 1885. |
| Somerset, Somerset Co. | 40 01 | 79 04 | 1883.3 | + 3.33 | +0.46 | + 3.79 | County Surveyors. | Rep. S. of I. A., 1885. |
| Upper Strasburg, Franklin Co. | 40 03 | 77 41 | 1889.4 | + 4.04 | +0.05 | + 4.09 | J. B. Kaufman. | MS. in C. and G. S. Office. |

* Corrected. † Doubtful.

*Table of Observed Magnetic Declinations and Values reduced to the Year* 1890—**Continued.**

PENNSYLVANIA—Continued.

| Name of station. | φ | λ | t | D | ΔD | $D_{1890.0}$ | Observer. | Reference. |
|---|---|---|---|---|---|---|---|---|
| | ° ′ | ° ′ | | ° | ° | ° | | |
| Greenfield. | 40 06 | 79 52 | 1874.62 | + 2.04 | +0.90 | + 2.94 | F. E. Hilgard. | Nat. Acad. Sc. |
| Norristown. | 40 07 | 75 19 | 1855.29 | + 4.73 | +2.90 | + 7.63 | County Surveyors. | Rep. S. of I. A., 1876. |
| Hopewell. | 40 07 | 78 17 | 1876.62 | + 3.18 | +0.87 | + 4.05 | County Surveyors. | Rep. S. of I. A., 1876. |
| Norriton. | 40 10 | 75 26 | 1770.5 | + 3.13 | +3.43 | + 6.56 | W. Smith. | Sill. Jour., Vol. 34, 1838. |
| Washington, Wash. Co. | 40 11 | 80 13 | 1876.9 | + 2.00 | +0.76 | + 2.76 | County Surveyors. | Rep. S. of I. A., 1876. |
| Hatboro' (S. V. S.). | 40 12* | 75 07 | 1850.5 | + 4.42 | ------ | + 7.56 | E. W. Beans. | MS. in C. and G. S. Office. |
| Carlisle, Cumberland Co. | 40 12 | 77 11 | 1883.77 | + 4.25 | +0.28 | + 4.53 | County Surveyors. | Rep. S. of I. A., 1885. |
| West Boundary of State. | 40 14 | 80 31* | 1786.5 | − 1.12 | +3.12 | + 2.00 | A. Ellicott. | Sill. Jour., Vol. 34, 1838. |
| Harrisburg, Capitol Grounds. | 40 16 | 76 53 | 1889.1 | + 5.52 | +0.04 | + 5.56 | J. B. Kaufman. | MS. in C. and G. S. Office. |
| Doylestown, Bucks Co. | 40 18 | 75 10 | 1885.3 | + 7.08 | +0.38 | + 7.46 | County Surveyors. | Rep. S. of I. A., 1885. |
| Greensburg, Westmoreland Co. | 40 19 | 79 32 | 1884.80 | + 3.12 | +0.29 | + 3.41 | County Surveyors. | Rep. S. of I. A., 1885. |
| Lebanon. | 40 20 | 76 26 | 1876.3 | + 4.87 | +0.69 | + 5.56 | County Surveyors. | Rep. S. of I. A., 1876. |
| Johnstown, Cambria Co. | 40 20 | 78 53 | 1875.68 | + 2.33 | +0.94 | + 3.27 | County Surveyors. | Rep. S. of I. A., 1876. |
| Hollidaysburg, Blair Co. | 40 28 | 78 23 | 1885.8 | + 4.00 | +0.29 | + 4.29 | County Surveyors. | Rep. S. of I. A., 1885. |
| Pittsburgh, near Homewood. | 40 28 | 80 00 | 1884.5 | + 2.68 | ------ | + 3.06 | —— Hemmings. | Rep. S. of I. A., 1885. |
| Huntingdon (S.V.S.). | 40 31 | 78 02 | 1885.98 | + 4.63 | ------ | + 4.95 | County Surveyors. | Rep. S. of I. A., 1885. |
| Altoona. | 40 31 | 78 23 | 1874.54 | + 2.78 | +1.14 | + 3.92 | F. E. Hilgard. | Nat. Acad. Sc. |
| Bethlehem (S.V. S.). | 40 36 | 75 23 | 1884.5 | + 6.10 | ------ | + 6.66 | R. W. Walker. | MS. in C. and G. S. Office. |
| Allentown. | 40 36 | 75 28 | 1878.2 | + 5.08 | +0.96 | + 6.04 | County Surveyors. | Rep. S. of I. A., 1878. |
| Lewistown, Mifflin Co. | 40 36 | 77 35 | 1876.8 | + 3.60 | +0.96 | + 4.56 | County Surveyors. | Rep. S. of I. A., 1876. |
| Indiana, Indiana Co. | 40 37 | 79 10 | 1857.61 | + 1.20 | +2.09 | + 3.29 | County Surveyors. | Rep. S. of I. A., 1876. |
| Tyrone. | 40 40 | 78 16 | 1879.21 | + 3.80 | +0.78 | + 4.58 | W. G. Waring. | MS. in C. and G. S. Office. |
| Beaver Co., Ohio line. | 40 40 | 80 31† | 1878.6 | + 1.37 | +0.75 | + 2.12 | County Surveyors. | Rep. Sec. of I. A., 1885. |

* Corrected. † Doubtful.

*Table of Observed Magnetic Declinations and Values reduced to the Year* 1890—Continued.

PENNSYLVANIA—Continued.

| Name of station. | φ | λ | t | D | ΔD | $D_{1890.0}$ | Observer. | Reference. |
|---|---|---|---|---|---|---|---|---|
| | ° ′ | ° ′ | | ° | ° | ° | | |
| Easton. | 40 42 | 75 15 | 1841.56 | + 3.63 | +3.68 | + 7.31 | A. D. Bache. | C. S. Rep., 1862. |
| West Boundary of State. | 40 42 | 80 31* | 1786.5 | — 0.85 | +2.88 | + 2.03 | A. Ellicott. | Sill. Jour., Vol. 34, 1838. |
| Meridian Station, West Boundary of State. | 40 43 | 80 31 | 1879.5 | + 1.52 | +0.69 | + 2.21 | Boundary Com'n of 1878. | Rep. S. of I. A., 1885. |
| Beaver (S. V. S.). | 40 44 | 80 19 | 1883.74 | + 1.70 | ------ | + 2.18 | County Surveyors. | Rep. S. of I. A., 1885. |
| Meridian Station, W. B. of State. | 40 45 | 80 31 | 1879.5 | + 1.65 | +0.69 | + 2.34 | Boundary Com'n of 1878. | Rep. S. of I. A., 1885. |
| Meridian Station, W. B. of State. | 40 49 | 80 31 | 1879.5 | + 1.90 | +0.69 | + 2.59 | Boundary Com'n of 1878. | Rep. S. of I. A., 1885. |
| West Boundary of State. | 40 50 | 80 31* | 1786.5 | — 0.28 | +2.88 | + 2.60 | A. Ellicott. | Sill. Jour., Vol. 34, 1838. |
| Sunbury, Northumberland Co. | 40 52 | 76 50 | 1884.54 | + 5.17 | +0.33 | + 5.50 | County Surveyors. | Rep. S. of I. A., 1885. |
| Bellefonte. | 40 54 | 77 48 | 1855.5 | + 2.50 | +2.52 | + 5.02 | County Surveyors. | Rep. S. of I. A., 1876. |
| Butler, Butler Co. | 40 54 | 79 50 | 1885.83 | + 2.05 | +0.24 | + 2.29 | B. F. Hilliard. | Rep. S. of I. A., 1885. |
| Portland. | 40 55 | 75 06 | 1887.8 | + 7.08 | +0.13 | + 7.21 | ---------- | Mag. Sur., N. J., Cook, Geologist, 1888. |
| Lewisburgh, Union Co. | 40 58 | 77 12 | 1884.8 | + 4.95 | +0.36 | + 5.31 | County Surveyors. | Rep. S. of I. A., 1885. |
| Curvinsville. | 40 58 | 78 36 | 1841.58 | + 1.75 | +3.17 | + 4.92 | A. D. Bache. | C. S. Rep., 1862. |
| Water Gap House. | 40 59 | 75 08 | 1887.8 | + 6.60 | +0.13 | + 6.73 | ---------- | Mag. Sur., N. J., Cook, Geologist, 1888. |
| Mountain Home, Monroe Co. | 41 00† | 75 30† | 1883.85 | + 7.00 | +0.50 | + 7.50 | County Surveyors. | Rep. S. of I. A., 1885. |
| West Boundary of State. | 41 00 | 80 31* | 1786.5 | — 0.32 | +3.13 | + 2.81 | A. Ellicott. | Sill. Jour., Vol. 34, 1838. |
| New Castle, Lawrence Co. | 41 01 | 80 19 | 1883.87 | + 1.83 | +0.41 | + 2.24 | County Surveyors. | Rep. S. of I. A., 1885. |
| Morrisdale. | 41 02 | 78 08† | 1870.81 | + 2.70 | +1.41 | + 4.11 | County Surveyors. | Rep. S. of I. A., 1876. |
| Meridian Station, W. B. of State. | 41 07 | 80 31 | 1879.5 | + 1.78 | +0.60 | + 2.38 | Bound. Com'n of 1878. | Rep. S. of I. A., 1885. |
| West Boundary of State. | 41 08 | 80 31* | 1786.5 | — 0.42 | +3.13 | + 2.71 | A. Ellicott. | Sill. Jour., Vol. 34, 1838. |
| Brookville. | 41 10 | 79 07 | 1885.3 | + 3.42 | +0.27 | + 3.69 | County Surveyors. | Rep. S. of I. A., 1885. |

* Corrected. † Doubtful.

*Table of Observed Magnetic Declinations and Values reduced to the Year* **1890—Continued.**

PENNSYLVANIA—Continued.

| Name of station. | φ | λ | t | D | ΔD | $D_{1890.0}$ | Observer. | Reference. |
|---|---|---|---|---|---|---|---|---|
| | ° ′ | ° ′ | | ° | ° | ° | | |
| Dingman. | 41 13 | 74 52 | 1884.8 | + 6.22 | +0.32 | + 6.54 | Geol. Surveyor. | Mag. Sur. of N. J., Cook, Geologist, 1888. |
| Meridian Station, W. B. of State. | 41 13 | 80 31 | 1879.5 | + 1.78 | +0.60 | + 2.38 | Bound. Com'n of 1878. | Rep. S. of I. A., 1885. |
| Clarion. | 41 14 | 79 24 | 1876.5 | + 2.33 | +0.87 | + 3.20 | County Surveyors. | Rep. S. of I. A., 1877. |
| Mercer. | 41 14 | 80 16 | 1853.95 | + 0.92 | +2.36 | + 3.28 | County Surveyors. | Rep. S. of I. A., 1876. |
| Williamsport, Lycoming Co. | 41 15 | 77 03 | 1878.5 | + 5.25 | +0.75 | + 6.00 | County Surveyors. | Rep. S. of I. A., 1878. |
| Sharpsville. | 41 17 | 80 27 | 1874.59 | + 1.00 | +0.90 | + 1.90 | F. E. Hilgard. | Nat. Acad. Sc. |
| Meridian Station, W. B. of State. | 41 17 | 80 31 | 1878.5 | + 1.70 | +0.67 | + 2.37 | Boundary Com'n of 1878. | Rep. S. of I. A., 1885. |
| Milford, Pike. | 41 21 | 74 48 | 1883.77 | + 6.00 | +0.37 | + 6.37 | County Surveyors. | Rep. S. of I. A., 1885. |
| Heiner's Run. | 41 21 | 77 48 | 1856.5 | + 3.32 | +2.46 | + 5.78 | S. Tyndale. | C. S. Rep., 1856. |
| Ridgway. | 41 26 | 78 43 | 1855.5 | + 1.50 | +2.43 | + 3.93 | County Surveyors. | Rep. S. of I. A., 1876. |
| Cameron Co. | 41 27 | 78 12 | 1883.87 | + 4.50 | +0.43 | + 4.93 | County Surveyors. | Rep. S. of I. A., 1885. |
| Honesdale. | 41 35 | 75 17 | 1876.8 | + 6.75 | +0.87 | + 7.62 | County Surveyors. | Rep. S. of I. A., 1876. |
| Meadville. | 41 39 | 80 09 | 1884.85 | + 3.13 | +0.32 | + 3.45 | County Surveyors. | Rep. S. of I. A., 1885. |
| Towanda, Bradford Co. | 41 47 | 76 30 | 1855.5 | + 4.33 | +2.51 | + 6.84 | County Surveyors. | Rep S. of I. A., 1876. |
| Montrose, Susquehanna Co. | 41 50 | 75 57 | 1877.9 | + 7.10* | +0.90 | + 8.00 | County Surveyors. | Rep. S. of I. A., 1877. |
| Warren. | 41 50 | 79 12 | 1883.3 | + 3.67 | +0.41 | + 4.08 | County Surveyors. | Rep. S. of I. A., 1885. |
| Bloomfield. | 41 50 | 79 50 | 1883.85 | + 3.25 | +0.38 | + 3.63 | County Surveyors. | Rep. S. of I. A., 1885. |
| Silver Lake. | 41 57 | 76 02 | 1841.64 | + 4.50 | +3.48 | + 7.98 | A. D. Bache. | C. S. Rep., 1862. |
| North terminal Monument, Pa. and Ohio line. | 41 58 | 80 31 | 1878.5 | + 2.73 | +0.74 | + 3.47 | Bound. Com'n of 1878. | Rep. S. of I. A., 1885. |
| Little Meadows, N. Y. and Pa. line at 39½ mile-stone. | 42 00 | 76 08 | 1883.70 | + 7.47 | +0.40 | + 7.87 | H. W. Clarke. | MS. in C. and G. S. Office. |
| New York line, Bradford Co. | 42 00 | 76 30* | 1877.5 | + 5.53 | +0.84 | + 6.37 | County Surveyors. | Rep. S. of I. A., 1877. |

* Doubtful.

*Table of Observed Magnetic Declinations and Values reduced to the Year* 1890—Continued.

PENNSYLVANIA—Continued.

| Name of station. | $\varphi$ | $\lambda$ | $t$ | D | $\Delta$D | $D_{1890.0}$ | Observer. | Reference. |
|---|---|---|---|---|---|---|---|---|
| | ° ′ | ° ′ | | ° | ° | ° | | |
| Burt, N. Y. and Pa. line. west of mile-stone 69. | 42 00 | 76 44 | 1882.68 | + 6.07 | +0.46 | + 6.53 | H. W. Clarke. | MS. in C. and G. S. Office. |
| N. Y. and Pa. line, ¼ mile west of mile-stone 90. | 42 00 | 77 08 | 1877.73 | + 5.25 | +0.82 | + 6.07 | H. W. Clarke. | MS. in C. and G. S. Office. |
| New York line, Tioga Co. | 42 00 | 77 12* | 1876.5 | + 5.43 | +0.90 | + 6.33 | County Surveyors. | Rep. S. of I. A., 1876. |
| Station N. Y. and Pa. line, near mile-stone 167. | 42 00 | 78 38 | 1879.52 | + 3.98 | +0.76 | + 4.74 | H. W. Clarke. | MS. in C. and G. S. Office. |
| Station N. Y. and Pa. line, near mile-stone 168. | 42 00 | 78 39 | 1879.52 | + 4.07 | +0.76 | + 4.83 | H. W. Clarke. | MS. in C. and G. S. Office. |
| Monument N. Y. and Pa. line, near mile-stone 171. | 42 00 | 78 42 | 1799.50 | + 1.00 | +4.33 | + 5.33 | B. Ellicott. | MS. in C. and G. S. Office. |
| Clark, Boundary station, Erie Co. | 42 00 | 79 45 | 1884.69 | + 3.35 | +0.31 | + 3.66 | H. W. Clarke. | MS. in C. and G. S. Office. |
| Meridian Boundary, N. Y. and Pa., mile-stone 18. | 42 00 | 79 46 | 1885.55 | + 3.47 | +0.26 | + 3.73 | H. W. Clarke. | MS. in C. and G. S. Office. |
| Pennsylvania line, near Lake Erie, 3 miles east of Ohio. | 42 00 | 80 28 | 1787.80 | + 0.12 | +3.75 | + 3.87 | S. de Witt and others. | Geol. Sur. of N. Y. |
| North Springfield. | 42 00 | 80 29 | 1875.77 | + 3.05 | +0.91 | + 3.96 | J. Eisenmann. | P. P., U. S. Eng's, No. 24. |
| Meridian Boundary, N. Y. and Pa., mile-stone 17. | 42 01 | 79 46 | 1885.55 | + 3.43 | +0.26 | + 3.69 | H. W. Clarke. | MS. in C. and G. S. Office. |
| Meridian Boundary, N. Y. and Pa., mile-stone 16. | 42 02 | 79 46 | 1885.55 | + 3.34 | +0.26 | + 3.60 | H. W. Clarke. | MS. in C. and G. S. Office. |
| Meridian Boundary, N. Y. and Pa., mile-stone 15. | 42 03 | 79 46 | 1885.57 | + 3.57 | +0.26 | + 3.83 | H. W. Clarke. | MS. in C. and G. S. Office. |
| Avonia. | 42 03 | 80 18 | 1875.77 | + 2.03 | +0.91 | + 2.94 | F. M. Towar. | P. P., U. S. Eng's, No. 24. |
| Meridian Boundary, N. Y. and Pa., mile-stone 14. | 42 04 | 79 46 | 1885.57 | + 3.53 | +0.26 | + 3.79 | H. W. Clarke. | MS. in C. and G. S. Office. |
| Meridian Boundary, N. Y. and Pa., mile-stone 13. | 42 04 | 79 46 | 1885.56 | + 3.53 | +0.26 | + 3.79 | H. W. Clarke. | MS. in C. and G. S. Office. |

* Doubtful.

*Table of Observed Magnetic Declinations and Values reduced to the Year* 1890—Continued.

PENNSYLVANIA—Continued.

| Name of station. | | λ | t | D | ΔD | $D_{1890.0}$ | Observer. | Reference. |
|---|---|---|---|---|---|---|---|---|
| | ° ′ | ° ′ | | ° | ° | ° | | |
| Meridian Boundary, N. Y. and Pa., mile-stone 12. | 42 05 | 79 46 | 1885.56 | + 3.44 | +0.26 | + 3.70 | H. W. Clarke. | MS. in C. and G. S. Office. |
| Fairview. | 42 05 | 80 27 | 1838.5 | 0.00 | +3.33 | + 3.33 | H. H. Sherwood. | Sill. Jour., Vol. 39, 1840. |
| Meridian Boundary, N. Y. and Pa., mile-stone 11. | 42 06 | 79 46 | 1885.57 | + 3.50 | +0.26 | + 3.76 | H. W. Clarke. | MS. in C. and G. S. Office. |
| Meridian Boundary, N. Y. and Pa., mile-stone 10. | 42 07 | 79 46 | 1885.57 | + 3.49 | +0.26 | + 3.75 | H. W. Clarke. | MS. in C. and G. S. Office. |
| Meridian Boundary, N. Y. and Pa., mile-stone 9. | 42 08 | 79 46 | 1885.57 | + 3.55 | +0.26 | + 3.81 | H. W. Clarke. | MS. in C. and G. S. Office. |
| Meridian Boundary, N. Y. and Pa., mile-stone 8. | 42 08 | 79 46 | 1885.58 | + 3.58 | +0.26 | + 3.84 | H. W. Clarke. | MS. in C. and G. S. Office. |
| Meridian Boundary, N. Y. and Pa., mile-stone 7. | 42 09 | 79 46 | 1885.58 | + 3.64 | +0.26 | + 3.90 | H. W. Clarke. | MS. in C. and G. S. Office. |
| Meridian Boundary, N. Y. and Pa., mile-stone 6. | 42 10 | 79 46 | 1885.58 | + 3.67 | +0.26 | + 3.93 | H. W. Clarke. | MS. in C. and G. S. Office. |
| Meridian Boundary, N. Y. and Pa., mile-stone 5. | 42 11 | 79 46 | 1885.58 | + 3.68 | +0.26 | + 3.94 | H. W. Clarke. | MS. in C. and G. S. Office. |
| Meridian Boundary, N. Y. and Pa., mile-stone 4. | 42 12 | 79 46 | 1885.58 | + 3.76 | +0.26 | + 4.02 | H. W. Clarke. | MS. in C. and G. S. Office. |
| Meridian Boundary, N. Y. and Pa., mile-stone 3. | 42 13 | 79 46 | 1885.58 | + 3.77 | +0.26 | + 4.03 | H. W. Clarke. | MS. in C. and G. S. Office. |
| Boundary Stone at Lake Erie, NW. corner Chautauqua Co. | 42 15 | 79 46 | 1865.66 | + 2.50 | +1.63 | + 4.13 | —— Peters. | MS. by H.W. Clarke. |
| North East. | 42 15 | 79 50 | 1875.73 | + 2.90 | +0.92 | + 3.82 | J. Eisenmann. | P. P., U. S. Eng's, No. 24. |
| Boundary Stone at Lake Erie, N. Y. and Pa. | 42 16 | 79 46 | 1869.71 | + 2.58 | +1.34 | + 3.92 | —— Peters. | MS. by J. S. Africa. |

*Table of Observed Magnetic Declinations and Values reduced to the Year* 1800—Continued.

RHODE ISLAND. Group 1.

| Name of station. | φ | λ | t | D | ΔD | $D_{1890.0}$ | Observer. | Reference. |
|---|---|---|---|---|---|---|---|---|
| | ° ′ | ° ′ | | ° | ° | ° | | |
| Watch Hill. | 41 19 | 71 51 | 1847.72 | + 7.56 | +2.46 | +10.02 | R. H. Fauntleroy. | C. and G. S. Rep., 1881, App. 9. |
| Point Judith. | 41 22 | 71 29 | 1847.68 | + 9.00 | +2.51 | +11.51 | R. H. Fauntleroy. | C. and G. S. Rep., 1881, App. 9. |
| Coaster's Harbor. | 41 30 | 71 20 | 1885.31 | +10.87 | +0.27 | +11.14 | J. B. Baylor. | MS. in C. and G. S. Office. |
| McSparran. | 41 30 | 71 27 | 1844.54 | + 8.81 | +2.75 | +11.56 | A. D. Bache and T. J. Lee. | C. and G. S. Rep., 1881, App. 9. |
| Spencer. | 41 41 | 71 30 | 1844.62 | + 9.10 | +2.72 | +11.82 | T. J. Lee. | C. and G. S. Rep., 1881, App. 9. |
| Providence, E. of Brown University (S. V. S.). | 41 50 | 71 24 | 1885.29 | +11.16 | ------ | +11.16 | J. B. Baylor. | MS. in C. and G. S. Office. |
| Beaconpole. | 42 00 | 71 27 | 1844.86 | + 9.45 | +2.87 | +12.32 | T. J. Lee. | C. and G. S. Rep., 1881, App. 9. |

Group 2.

| | | | | | | | | |
|---|---|---|---|---|---|---|---|---|
| Sakonnet Point. | 41 27 | 71 12 | 1775.5 | + 6.00 | + 4.7 | +10.7 | ---------- | Des Barres' Atl. Nep., 1781. |
| Newport. | 41 28 | 71 20* | 1832.5 | + 8.20 | +3.54 | +11.74 | A. S. Wadsworth. | Chart of Narragansett Bay. |

SOUTH CAROLINA. Group 1.

| | | | | | | | | |
|---|---|---|---|---|---|---|---|---|
| Graham, Hilton Head. | 32 13 | 80 46 | 1870.20 | — 1.92 | +1.18 | — 0.74 | C. O. Boutelle. | C. and G. S. Rep., 1881, App. 9. |
| Port Royal. | 32 18 | 80 38 | 1859.09 | — 3.07 | +1.87 | — 1.20 | C. O. Boutelle. | C. and G. S. Rep., 1881, App. 9. |
| Beaufort. | 32 26 | 80 40 | 1875.37 | — 1.97 | +0.86 | — 1.11 | C. O. Boutelle. | C. and G. S. Rep., 1881, App. 9. |
| East Base, Edisto Island. | 32 33 | 80 14 | 1850.26 | — 2.89 | +2.38 | — 0.51 | G. Davidson. | C. and G. S. Rep., 1881, App. 9. |
| Breach Inlet, Sullivan's Island. | 32 46 | 79 49 | 1885.99 | — 0.24 | +0.20 | — 0.04 | J. B. Baylor. | MS. in C. and G. S. Office. |
| Allston, near Georgetown. | 33 22 | 79 17 | 1853.98 | — 2.11 | +2.22 | + 0.11 | C. O. Boutelle. | C. and G. S. Rep., 1881, App 9. |
| Aiken. | 33 32 | 81 43 | 1885.97 | — 1.46 | +0.22 | — 1.24 | J. B. Baylor. | MS. in C. and G. S. Office. |
| Columbia. | 34 00 | 81 02 | 1854.14 | — 3.04 | +1.97 | — 1.07 | G. W. Dean. | C. and G. S. Rep., 1881, App. 9. |

* Corrected.

*Table of Observed Magnetic Declinations and Values reduced to the Year* 1890—Continued.

SOUTH CAROLINA—Continued. Group 2.

| Name of station. | φ | λ | t | D | ΔD | $D_{1900.0}$ | Observer. | Reference. |
|---|---|---|---|---|---|---|---|---|
| | ° ′ | ° ′ | | ° | ° | ° | | |
| Robertsville. | 32 36 | 81 12 | 1843.5 | — 3.42 | +2.61 | — 0.81 | W. T. Feay. | Agricultural Register. |
| Charleston (S.V.S.). | 32 47 | 79 56 | 1847.8 | — 2.25 | ------ | + 0.09 | C. Parker. | Pamphlet by C. Parker, Charleston, 1849. |
| Columbia. | 34 00 | 81 02 | 1875.48 | — 1.82 | +0.80 | — 1.02 | J. M. Poole. | Nat. Acad. Sc. |
| Florence. | 34 12 | 79 44 | 1875.48 | — 1.20 | +0.80 | — 0.40 | J. M. Poole. | Nat. Acad. Sc. |

SOUTH DAKOTA. Group 1.

| | | | | | | | | |
|---|---|---|---|---|---|---|---|---|
| Yankton. | 42 54 | 97 28 | 1880.77 | —12.07 | +0.69 | —11.38 | J. B. Baylor. | C. and G. S. Rep., 1881, App. 9. |

Group 2.

| | | | | | | | | |
|---|---|---|---|---|---|---|---|---|
| South Cheyenne River. | 43 18 | 103 50 | 1877.80 | —15.50 | +0.71 | —14.79 | W. S. Stanton. | Rep. Ch. of Eng's, 1878. |
| White River. | 43 45 | 99 45 | 1860.5 | —14.83 | +1.75 | —13.08 | (W. F. Raynolds.) | Expl. Exp'n, 1865, |
| French Creek. | 43 46 | 103 34 | 1877.79 | —15.36 | +0.71 | —14.65 | W. S. Stanton. | Rep. Ch. of Eng's. 1878. |
| Spring Creek. | 43 57 | 103 12 | 1877.77 | —16.36 | +0.71 | —15.65 | W. S. Stanton. | Rep. Ch. of Eng's, 1878. |
| Cold Springs. | 44 09 | 104 02 | 1877.60 | —15.69 | +0.72 | —14.97 | W. S. Stanton. | Rep. Ch. of Eng's, 1878. |
| Fort Pierre. | 44 25 | 100 24 | 1860.00 | —14.75 | +1.50 | —13.25 | (W. F. Raynolds.) | Expl. Exp'n, 1865. |
| Oak Grove. | 44 27 | 103 36 | 1877.77 | —16.06 | +0.71 | —15.35 | W. S. Stanton. | Rep. Ch. of Eng's, 1878. |
| Spearfish Creek. | 44 30 | 103 51 | 1877.63 | —15.44 | +0.72 | —14.72 | W. S. Stanton. | Rep. Ch. of Eng's, 1878. |
| Cheyenne River. | 44 35 | 101 25 | 1859.5 | —14.50 | +1.52 | —12.98 | (W. F. Raynolds.) | Expl. Exp'n, 1865. |
| Red Earth Creek. | 44 35 | 103 54 | 1859.5 | —17.00 | +1.52 | —15.48 | (W. F. Raynolds.) | Expl. Exp'n, 1865. |
| Encampment on Saint Peter River. | 44 41 | 97 00 | 1823.5 | —12.35 | ------ | ------ | S. H. Long. | Sill. Jour., Vol. 34, 1838. |
| Little Moreau River. | 45 18 | 101 02 | 1860.5 | —16.50 | +1.48 | —15.02 | (W. F. Raynolds.) | Expl. Exp'n, 1865. |
| Fort of Columbia, Fur Company. | 45 39 | 96 34 | 1823.5 | —12.48 | ------ | ------ | S. H. Long. | Sill. Jour., Vol. 34, 1838. |

TENNESSEE. Group 1.

| | | | | | | | | |
|---|---|---|---|---|---|---|---|---|
| Chattanooga. | 35 00 | 85 18 | 1881.57 | — 2.44 | +0.53 | — 1.91 | J. B. Baylor. | C. and G. S. Rep., 1881, App. 9. |
| Grand Junction. | 35 05 | 89 13 | 1881.69 | — 5.98 | +0.44 | — 5.54 | J. B. Baylor. | C. and G. S. Rep., 1881, App. 9. |
| Pulaski. | 35 13 | 87 03 | 1881.65 | — 5.02 | +0.53 | — 4.49 | J. B. Baylor. | C. and G. S. Rep., 1881, App. 9. |

*Table of Observed Magnetic Declinations and Values reduced to the Year* 1890—Continued.

TENNESSEE—Continued.

| Name of station. | φ | λ | t | D | ΔD | $D_{1890.0}$ | Observer. | Reference. |
|---|---|---|---|---|---|---|---|---|
| | ° ′ | ° ′ | | ° | ° | ° | | |
| Tullahoma. | 35 22 | 86 13 | 1881.59 | — 3.52 | +0.53 | — 2.99 | J. B. Baylor. | C. and G. S. Rep., 1881, App. 9. |
| Clifton | 35 23 | 88 01 | 1865.18 | — 5.80 | +1.24 | — 4.56 | A. T. Mosman. | C. and G. S. Rep., 1881, App. 9. |
| Athens. | 35 27 | 84 37 | 1881.55 | — 1.74 | +0.51 | — 1.23 | J. B. Baylor. | C. and G. S. Rep., 1881. App. 9. |
| Columbia. | 35 37 | 87 04 | 1881.63 | — 4.59 | +0.53 | — 4.06 | J. B. Baylor. | C. and G. S. Rep., 1881, App. 9. |
| Jackson. | 35 39 | 88 51 | 1881.71 | — 5.83 | +0.44 | — 5.39 | J. B. Baylor. | C. and G. S. Rep., 1881, App. 9. |
| Murfreesboro'. | 35 53 | 86 25 | 1881.61 | — 4.89 | +0.62 | — 4.27 | J. B. Baylor. | C. and G. S. Rep., 1881, App. 9. |
| Johnsonville. | 36 04 | 88 00 | 1865.19 | — 5.83 | +1.24 | — 4.59 | A. T. Mosman. | C. and G. S. Rep., 1881, App. 9. |
| Rutherford. | 36 09 | 89 01 | 1881.72 | — 5.99 | +0.44 | — 5.55 | J. B. Baylor. | C. and G. S. Rep., 1881, App. 9. |
| Nashville (S. V. S.). | 36 10 | 86 48 | 1888.60 | — 4.52 | ------ | — 4.40 | J. B. Baylor. | MS. in C. and G. S. Office. |
| Caryville. | 36 19 | 84 14 | 1881.53 | — 1.20 | +0.62 | — 0.58 | J. B. Baylor. | C. and G. S. Rep., 1881, App. 9. |
| Fort Henry. | 36 30 | 88 04 | 1865.19 | — 6.40 | +1.24 | — 5.16 | A. T. Mosman. | C. and G. S. Rep., 1881, App. 9. |
| Bristol. | 36 36 | 82 11 | 1881.52 | — 0.64 | +0.50 | — 0.14 | J. B. Baylor. | C. and G. S. Rep., 1881, App. 9. |

Group 2.

| | | | | | | | | |
|---|---|---|---|---|---|---|---|---|
| Memphis. | 35 09 | 90 03 | 1877.55 | — 6.78 | +0.65 | — 6.13 | C. F. Powell. | Rep. Ch. of Eng's, 1878. |
| Cleveland. | 35 10 | 85 00 | 1875.46 | — 3.51 | +0.87 | — 2.64 | F. E. Hilgard. | Nat. Acad. Sc. |
| Knoxville. | 35 57 | 83 56 | 1875.46 | — 2.25 | +0.94 | — 1.31 | F. E. Hilgard. | Nat. Acad. Sc. |
| Edgefield. | 36 15 | 86 46 | 1871.92 | — 5.03 | +1.26 | — 3.77 | T. C. Hilgard. | Nat. Acad. Sc. |
| Rogersville. | 36 25 | 83 03 | 1873.63 | — 1.82 | +1.06 | — 0.76 | F. E. Hilgard. | Nat. Acad. Sc. |

TEXAS.

Group 1.

| | | | | | | | | |
|---|---|---|---|---|---|---|---|---|
| Mouth of Rio Grande, observatory. | 25 57 | 97 09* | 1853.85 | — 9.02 | +1.45 | — 7.57 | W. H. Emory. | C. and G. S. Rep., 1881, App. 9. |
| Lavaca. | 28 38 | 96 37 | 1868.31 | — 9.09 | +1.07 | — 8.02 | E. Goodfellow. | C. and G. S. Rep., 1881, App. 9. |
| Jupiter. | 28 55 | 95 21 | 1853.36 | — 9.14 | +1.46 | — 7.68 | G. W. Dean. | C. and G. S. Rep., 1881, App. 9. |
| Galveston Island, East Base. | 29 13 | 94 56 | 1853.21 | — 9.08 | +1.46 | — 7.62 | G. W. Dean. | C. and G. S. Rep., 1881, App. 9. |

*Corrected.

*Table of Observed Magnetic Declinations and Values reduced to the Year* 1890—Continued.

TEXAS—Continued.

| Name of station. | φ | λ | t | D | ΔD | $D_{1890.0}$ | Observer. | Reference. |
|---|---|---|---|---|---|---|---|---|
| | ° ′ | ° ′ | | ° | ° | ° | | |
| San Antonio (S. V. S.). | 29 25 | 98 29 | 1878.44 | — 9.37 | ------ | — 8.74 | J. B. Baylor. | C. and G. S. Rep., 1881, App. 9. |
| Dollar Point. | 29 26 | 94 53 | 1878.41 | — 8.29 | +0.55 | — 7.74 | J. B. Baylor. | C. and G. S. Rep., 1881, App. 9. |
| Hempstead. | 30 08 | 96 10 | 1878.48 | — 8.61 | +0.63 | — 7.98 | J. B. Baylor. | C. and G. S. Rep., 1881, App. 9. |
| Austin. | 30 16 | 97 44 | 1878.47 | — 8.96 | +0.63 | — 8.33 | J. B. Baylor. | C. and G. S. Rep., 1881, App. 9. |
| Sierra Blanca. | 31 10 | 105 35 | 1888.93 | —11.30 | +0.04 | —11.26 | J. B. Baylor. | MS. in C. and G. S. Office. |
| Pecos City. | 31 26 | 103 20 | 1888.94 | —10.94 | +0.05 | —10.89 | J. B. Baylor. | MS. in C. and G. S. Office. |
| Groesbeck. | 31 33 | 96 30 | 1878.49 | — 9.25 | +0.63 | — 8.62 | J. B. Baylor. | C. and G. S. Rep., 1881, App. 9. |
| El Paso, north of Depot (S. V. S.). | 31 45 | 106 27 | 1888.92 | —11.90 | ------ | —11.93 | J. B. Baylor. | MS. in C. and G. S. Office. |
| Colorado. | 32 22 | 100 55 | 1888.94 | —11.00 | +0.05 | —10.95 | J. B. Baylor. | MS. in C. and G. S. Office. |
| Cisco. | 32 23 | 98 50 | 1888.95 | — 9.64 | +0.06 | — 9.58 | J. B. Baylor. | MS. in C. and G. S. Office. |
| Mineola. | 32 40 | 95 20 | 1888.97 | — 8.12 | +0.06 | — 8.06 | J. B. Baylor. | MS. in C. and G. S. Office. |
| Fort Worth. | 32 45 | 97 20 | 1888.96 | — 9.12 | +0.06 | — 9.06 | J. B. Baylor. | MS. in C. and G. S. Office. |
| Sherman. | 33 36 | 96 36 | 1878.52 | — 9.33 | +0.63 | — 8.70 | J. B. Baylor. | MS. in C. and G. S. Office. |

Group 2.

| | | | | | | | | |
|---|---|---|---|---|---|---|---|---|
| Ringgold Barracks. | 26 23 | 98 43 | 1853.5 | — 9.25 | +1.46 | — 7.79 | W. H. Emory. | Am. Acad. Sc., 1856. |
| Fort McIntosh. | 27 33* | 99 30* | 1852.5 | —10.00 | +1.47 | — 8.53 | W. H. Emory. | Am. Acad. Sc., 1856. |
| Pass Cavallo. | 28 21 | 96 24 | 1879.6 | — 8.33 | +0.58 | — 7.75 | U. S. Eng's. | Ch. of Eng's Rep., 1880. |
| Matagorda. | 28 41 | 95 58 | 1877.5 | — 8.42 | +0.68 | — 7.74 | A. H. Bishop. | MS. in C. and G. S. Office. |
| Eagle Pass. | 28 42 | 100 30 | 1852.5 | —10.02 | +1.47 | — 8.55 | W. H. Emory. | Am. Acad. Sc., 1856. |
| Mouth of Sabine River, Everett's house. | 29 44 | 93 52 | 1840.1 | — 8.67 | +1.89 | — 6.78 | J. D. Graham. | Am. Phil. Soc., 1846. |
| Austin, Travis Co. | 30 16 | 97 44 | 1835.5 | —10.00 | +1.46 | — 8.54 | (Austin Land Office Rec.). | MS. in C. and G. S. Office. |
| Fredericksburg, Gillespie Co.† | 30 16 | 98 48 | 1890.2 | — 9.22 | 0.00 | — 9.22 | A. Striegler. | MS. in C. and G. S. Office. |

* Corrected.

† Added Sept. 1890.

*Table of Observed Magnetic Declinations and Values reduced to the Year* 1890—Continued.

TEXAS—Continued.

| Name of station. | φ | λ | t | D | ΔD | $D_{1890.0}$ | Observer. | Reference. |
|---|---|---|---|---|---|---|---|---|
| | ° ′ | ° ′ | | ° | ° | ° | | |
| Willis, Montgomery Co. | 30 27 | 95 30 | 1838.5 | — 9.52 | +1.76 | — 7.76 | L. Burnes. | MS. in C. and G. S. Office. |
| Brazos. | 30 42 | 96 20 | 1823.5 | —10.62 | +1.20 | — 9.42 | (Austin Land Office Rec.). | MS. in C. and G. S. Office. |
| Burnet, Burnet Co. | 30 44 | 98 06 | 1873.88 | — 9.77 | +0.84 | — 8.93 | J. W. Glenn. | MS. in C. and G. S. Office. |
| Mouth of Cañon. | 31 02 | 105 37 | 1852.5 | —12.02 | +0.45 | —11.57 | W. H. Emory. | Am. Acad. Sc. 1856. |
| San Saba, San Saba Co. | 31 11 | 98 38 | 1874.00 | —10.98 | +0.84 | —10.14 | J. W. Glenn. | MS. in C. and G. S. Office. |
| Cherokee. | 31 45 | 95 00 | 1835.5 | — 9.33 | +1.86 | — 7.47 | (Austin Land Office Rec.). | MS. in C. and G. S., Office. |
| Fort Bliss, astronomical monument. | 31 46 | 106 29 | 1878.5 | —12.42 | ------ | —11.93 | ---------- | Ch. of Eng's Rep., 1879. |
| Frontera. | 31 49 | 106 33 | 1859.06 | —12.42 | +0.55 | —11.87 | J. H. Clark. | Rep. Com'r Gen. Land Off., 1882. |
| Longview. | 32 29 | 94 34 | 1872.29 | — 8.63 | +0.89 | — 7.74 | T. C. Hilgard. | Nat. Acad. Sc. |
| Fork of Brazos River. | 33 00 | 99 17 | 1854.5 | —11.20 | +1.20 | —10.00 | U. S. Officer. | Phil. Trans. Roy. Soc., 1875. |
| Sulphur Springs, Hopkins Co. | 33 08 | 95 32 | 1888.4 | — 8.80 | +0.09 | — 8.71 | E. H. Wells. | MS. in C. and G. S. Office. |
| West Fork of Trinity River. | 33 29 | 98 52 | 1854.5 | —10.28 | +1.20 | — 9.08 | J. Pope. | Pac. R. R. Exp. |
| Trinity Waters. | 33 34 | 98 15 | 1854.5 | —10.45 | +1.20 | — 9.25 | J. Pope. | Pac. R. R. Exp. |
| Elm Fork of Trinity River. | 33 42 | 97 23 | 1854.5 | —10.60 | +1.20 | — 9.40 | J. Pope. | Stone's Mag. Var., 1878. |

UTAH.

Group 1.

| | | | | | | | | |
|---|---|---|---|---|---|---|---|---|
| Beaver. | 38 16 | 112 38 | 1885.74 | —15.50 | +0.15 | —15.35 | G. F. Bird (W. Eimbeck). | MS. in C. and G. S. Office. |
| Tamarac. | 38 24 | 112 24 | 1885.62 | —15.62 | +0.16 | —15.46 | G. F. Bird, G. Lange (W. Eimbeck). | MS. in C. and G. S. Office. |
| Tushar. | 38 25 | 112 24 | 1885.66 | —15.37* | +0.15 | —15.22 | G. F. Bird, G. Lange (W. Eimbeck). | MS. in C. and G. S. Office. |
| Milford. | 38 25 | 113 00 | 1885.74 | —15.22 | +0.15 | —15.07 | G. F. Bird (W. Eimbeck). | MS. in C. and G. S. Office. |
| Deseret. | 39 18 | 112 38 | 1884.73 | —16.17 | +0.19 | —15.98 | W. Eimbeck, G. F. Bird. | MS. in C. and G. S. Office. |
| Scipio. | 39 24 | 112 12 | 1884.67 | —16.17 | +0.19 | —15.98 | W. Eimbeck, G. F. Bird. | MS. in C. and G. S. Office. |
| Nephi. | 39 42 | 111 51 | 1883.85 | —16.45 | +0.21 | —16.24 | W. Eimbeck, G. F. Bird. | MS. in C. and G. S. Office. |
| Mt. Nebo. | 39 48 | 111 46 | 1887.57 | —16.29 | +0.08 | —16.21 | W. Eimbeck, J. H. Turner. | MS. in C. and G. S. Office. |

* Mean of two.

*Table of Observed Magnetic Declinations and Values reduced to the Year* 1890—Continued.

UTAH—Continued.

| Name of station. | φ | λ | t* | D | ΔD | $D_{1890.0}$ | Observer. | Reference. |
|---|---|---|---|---|---|---|---|---|
| | ° ′ | ° ′ | | ° | ° | ° | | |
| Provo. | 40 15 | 111 40 | 1883.86 | —16.53 | +0.21 | —16.32 | W. Eimbeck, G. F. Bird. | MS. in C. and G. S. Office. |
| Mount Guyot. | 40 27 | 112 37 | 1887.74 | —16.64 | +0.07 | —16.57 | W. Eimbeck, J. H. Turner. | MS. in C. and G. S. Office. |
| Lake Shore. | 40 40 | 112 26 | 1887.79 | —16.64 | +0.07 | —16.57 | W. Eimbeck, J. H. Turner. | MS. in C. and G. S. Office. |
| Salt Lake City (S. V. S.). | 40 46 | 111 54 | 1887.86 | —16.51 | ------ | —16.27 | W. Eimbeck, J. H. Turner. | MS. in C. and G. S. Office. |
| Castle Rock. | 41 08 | 111 10 | 1878.80 | —16.95 | +0.33 | —16.62 | J. B. Baylor. | C. and G. S. Rep., 1881, App. 9. |
| Ogden, U. S. Engr's Observatory. | 41 13 | 112 00 | 1886.71 | —17.41 | +0.11 | —17.30 | R. A. Marr. | MS. in C. and G. S. Office. |
| Corinne. | 41 33 | 112 06 | 1881.35 | —17.52 | +0.27 | —17.25 | W. Eimbeck, R. A. Marr. | C. and G. S. Rep., 1881, App. 9. |
| Kelton. | 41 45 | 113 08 | 1881.34 | —17.76 | +0.27 | —17.49 | W. Eimbeck, R. A. Marr. | C. and G. S. Rep., 1881, App. 9. |

Group 2.*

| | | | | | | | | |
|---|---|---|---|---|---|---|---|---|
| Kanab. | 37 02 | 112 32 | 1872.5 | —14.38 | +0.30 | —14.08 | W. L. Marshall and E. P. Austin. | Rep. Ch. of Eng's, 1876. |
| Saint George. | 37 07 | 113 35 | 1871.5 | —16.45 | +0.22 | —16.23 | Eng'r Officer. | Geo. Pos. U. S. Eng's, Wash., 1885. |
| Virgin River. | 37 08 | 113 15 | 1872.5 | —15.48 | +0.22 | —15.26 | R. L. Hoxie. | Rep. Ch. of Eng's, 1876. |
| Camp on Virgin River. | 37 08 | 113 26 | 1872.5 | —15.48 | +0.22 | —15.26 | R. L. Hoxie. | Rep. Ch. of Eng's, 1876. |
| Paria. | 37 11 | 111 53 | 1872.5 | —14.50 | +0.30 | —14.20 | W. L. Marshall. | Rep. Ch. of Eng's, 1876. |
| Paria River. | 37 14 | 111 56 | 1872.5 | —14.22 | +0.30 | —13.92 | R. L. Hoxie. | Rep. Ch. of Eng's, 1876. |
| Toquerville. | 37 15 | 113 16 | 1872.5 | —16.18 | +0.22 | —15.96 | Eng'r Officer. | Geo. Pos. U. S. Eng's, Wash., 1885. |
| Pine Valley, near | 37 24 | 113 31 | 1872.5 | —16.00 | +0.22 | —15.78 | W. L. Marshall. | Rep. Ch. of Eng's, 1876. |
| Water Pocket, near Escalante River. | 37 28 | 111 02 | 1873.5 | —15.64 | +0.30 | —15.34 | R. L. Hoxie. | Rep. Ch. of Eng's, 1876. |
| Iron City. | 37 33 | 113 27 | 1872.5 | —18.50 | +0.22 | —18.28 | W. L. Marshall. | Rep. Ch. of Eng's, 1876. |
| Welcome Creek. | 37 34 | 111 27 | 1873.5 | —15.12 | +0.30 | —14.82 | R. L. Hoxie. | Rep. Ch. of Eng's, 1876. |
| Azay's Ranch. | 37 34 | 112 32 | 1872.5 | —16.85 | +0.30 | —16.55 | R. L. Hoxie. | Rep. Ch. of Eng's, 1876. |

*The greater part of the longitudes was supplied by me, as best I could, from charts.—[SCH.]

*Table of Observed Magnetic Declinations and Values reduced to the Year* 1890—Continued.

UTAH—Continued.

| Name of station. | φ | λ | t | D | ΔD | $D_{1890.0}$ | Observer. | Reference. |
|---|---|---|---|---|---|---|---|---|
| | ° ′ | ° ′ | | ° | ° | ° | | |
| Antelope Springs. | 37 46 | 113 26 | 1872.5 | −16.33 | +0.22 | −16.11 | W. L. Marshall. | Rep. Ch. of Eng's, 1876. |
| Desert Spring. | 37 49 | 113 57 | 1872.5 | −16.33 | +0.22 | −16.11 | W. L. Marshall. | Rep. Ch. of Eng's, 1876. |
| Paragoonah. | 37 55 | 112 48 | 1872.5 | −19.50 | +0.26 | −19.24 | W. L. Marshall. | Rep. Ch. of Eng's, 1876. |
| Mammoth Mill. | 38 05 | 113 46 | 1873.5 | −15.87 | +0.22 | −15.65 | R. L. Hoxie. | Rep. Ch. of Eng's, 1876. |
| Circleville. | 38 10 | 112 24 | 1872.5 | −21.50 | +0.22 | −21.28 | —— Marie. | Rep. Ch. of Eng's, 1876. |
| Minersville. | 38 13 | 112 56 | 1872.5 | −16.50 | +0.26 | −16.24 | W. L. Marshall. | Rep. Ch. of Eng's, 1876. |
| Dirty Devil River. | 38 16 | 111 11 | 1873.5 | −16.33 | +0.30 | −16.03 | R. L. Hoxie. | Rep. Ch. of Eng's, 1876. |
| Dirty Devil Cañon. | 38 17 | 111 00 | 1873.5 | −16.30 | +0.30 | −16.00 | R. L. Hoxie. | Rep. Ch. of Eng's, 1876. |
| Fort Cameron. | 38 17 | 111 44 | 1873.5 | −16.40 | +0.22 | −16.18 | G. M. Wheeler. | Rep. Ch. of Eng's, 1879. |
| Mill Spring Station. | 38 17 | 113 30 | 1872.5 | −17.33 | +0.30 | −17.03 | R. L. Hoxie. | Rep. Ch. of Eng's, 1876. |
| Rabbit Valley. | 38 19 | 111 25 | 1873.5 | −16.33 | +0.30 | −16.03 | R. L. Hoxie. | Rep. Ch. of Eng's, 1876. |
| Hay Spring. | 38 19 | 113 00 | 1872.5 | −16.26 | +0.30 | −15.96 | R. L. Hoxie. | Rep. Ch. of Eng's, 1876. |
| Grass Valley. | 38 20 | 111 54 | 1872.5 | −17.75 | +0.30 | −17.45 | W. L. Marshall. | Rep. Ch. of Eng's, 1876. |
| San Francisco Spring. | 38 27 | 113 17 | 1872.5 | −16.97 | +0.30 | −16.67 | R. L. Hoxie. | Rep. Ch. of Eng's, 1876. |
| Hawawat Spring. | 38 30 | 113 30 | 1869.5 | −16.66 | +0.30 | −16.36 | G. M. Wheeler and D. W. Lockwood. | Rep. Ch. of Eng's, 1876. |
| Grass Valley. | 38 34 | 111 50 | 1872.5 | −17.75 | +0.34 | −17.41 | W. L. Marshall. | Rep. Ch. of Eng's, 1876. |
| Black Rock Spring. | 38 43 | 112 57 | 1872.5 | −16.03 | +0.34 | −15.69 | R. L. Hoxie. | Rep. Ch. of Eng's, 1876. |
| Gunnison's Trail. | 38 48 | 111 30(?) | 1873.5 | −16.00 | +0.34 | −15.66 | R. L. Hoxie. | Rep. Ch. of Eng's, 1876. |
| Camp near Sevier Lake. | 38 50 | 113 15 | 1872.5 | −17.47 | +0.30 | −17.17 | R. L. Hoxie. | Rep. Ch. of Eng's, 1876. |
| Meadow Creek. | 38 51 | 112 26 | 1872.5 | −16.18 | +0.34 | −15.84 | R. L. Hoxie. | Rep. Ch. of Eng's, 1876. |
| Fillmore. | 38 57 | 112 17 | 1872.5 | −16.25 | +0.34 | −15.91 | R. L. Hoxie, G. M. Wheeler, and E. P. Austin. | Rep. Ch. of Eng's, 1876. |
| Muddy Creek. | 38 59 | 111 09 | 1873.5 | −16.00 | +0.34 | −15.66 | R. L. Hoxie. | Rep. Ch. of Eng's, 1876. |

*Table of Observed Magnetic Declinations and Values reduced to the Year* 1890—Continued.

UTAH—Continued.

| Name of station. | φ | λ | t | D | ΔD | $D_{1890.0}$ | Observer. | Reference. |
|---|---|---|---|---|---|---|---|---|
| | ° ′ | ° ′ | | ° | ° | ° | | |
| Fillmore City. | 38 59 | 112 20 | 1857.5 | −15.73 | 0.00 | −15.73 | ---------- | MS. from Smithsonian Inst'n. |
| Cottonwood Creek, South. | 39 05 | 111 07 | 1873.5 | −16.27 | +0.37 | −15.90 | R. L. Hoxie. | Rep. Ch. of Eng's, 1876. |
| Cedar Springs. | 39 08 | 113 00(?) | 1872.5 | −17.15 | +0.37 | −16.78 | —— Marie. | Rep. Ch. of Eng's, 1876. |
| Cottonwood Creek, North. | 39 14 | 111 03 | 1873.5 | −16.83 | +0.37 | −16.46 | R. L. Hoxie. | Rep. Ch. of Eng's, 1876. |
| Joe's Valley. | 39 25 | 111 12 | 1873.5 | −17.00 | +0.37 | −16.63 | R. L. Hoxie. | Rep. Ch. of Eng's, 1876. |
| Mt. Pleasant. | 39 32 | 111 29 | 1873.5 | −17.17 | +0.37 | −16.80 | R. L. Hoxie. | Rep. Ch. of Eng's, 1876. |
| Sevier Pass. | 39 33 | 112 17 | 1872.5 | −17.00 | +0.37 | −16.63 | W. L. Marshall. | Rep. Ch. of Eng's, 1876. |
| Sulphur. | 39 41 | 113 46 | 1859.5 | −14.93* | 0.00 | −14.93 | J. H. Simpson. | Stone's Mag. Var., 1878. |
| Fish Spring. | 39 52 | 113 21 | 1872.5 | −17.08 | +0.37 | −16.71 | R. L. Hoxie. | Rep. Ch. of Eng's, 1876. |
| Eureka City. | 39 58 | 112 07 | 1872.5 | −17.15 | +0.37 | −16.78 | W. L. Marshall. | Rep. Ch. of Eng's, 1876. |
| Santaquin. | 39 59 | 111 48 | 1872.5 | −17.43 | +0.37 | −17.06 | W. L. Marshall. | Rep. Ch. of Eng's, 1876. |
| Simpson's Spring. | 40 02 | 112 47 | 1859.4 | −15.70* | 0.00 | −15.70 | J. H. Simpson. | Stone's Mag. Var., 1878. |
| Faust's Station. | 40 12 | 112 27 | 1872.5 | −16.86 | +0.37 | −16.49 | R. L. Hoxie. | Rep. Ch. of Eng's, 1876. |
| Old Camp Floyd or Fairfield. | 40 16 | 112 05 | 1872.5 | −16.99 | +0.37 | −16.62 | R. L. Hoxie. | Rep. Ch. of Eng's, 1876. |
| Fort Douglas, astr'l monument. | 40 46 | 111 50 | 1872.5 | −17.02 | +0.37 | −16.65 | G. M. Wheeler. | Geo. Pos. U.S. Eng's, Wash., 1885. |
| Schneider's Creek. | 40 56 | 111 42 | 1858.9 | −18.92* | 0.00 | −18.92 | J. H. Simpson. | Stone's Mag. Var., 1878. |
| Box Elder. | 41 30 | 112 02 | 1884.25 | −17.39 | +0.20 | −17.19 | N. P. Anderson. | MS. in C. and G. S. Office. |
| Bear River. | 41 37 | 112 08 | 1881.70 | −17.50 | +0.27 | −17.23 | N. P. Anderson. | MS. in C. and G. S. Office. |
| Ten Miles SE. of Lake Town. | 41 45 | 111 10 | 1877.5 | −17.80 | +0.35 | −17.45 | S. E. Tillman. | Rep. Ch. of Eng's, 1878. |
| Meadowville, near. | 41 51 | 111 22 | 1877.5 | −18.02 | +0.35 | −17.67 | S. E. Tillman. | Rep. Ch. of Eng's, 1878. |
| Logan River, East Fork. | 41 56 | 111 33 | 1877.5 | −17.55 | +0.35 | −17.20 | S. E. Tillman. | Rep. Ch. of Eng's, 1878. |

*An index correction of +1° has been applied to Captain Simpson's declinations.—[SCH.]

*Table of Observed Magnetic Declinations and Values reduced to the Year* 1890—Continued.

VERMONT.

Group 1.

| Name of station. | φ | λ | t | D | ΔD | $D_{1890.0}$ | Observer. | Reference. |
|---|---|---|---|---|---|---|---|---|
| | ° ′ | ° ′ | | ° | ° | ° | | |
| Rutland (S. V. S.). | 43 36 | 72 56 | 1879.79 | +11.15 | ------ | +12.26 | J. B. Baylor. | C. and G. S. Rep., 1881, App. 9. |
| Burlington (S.V. S.). | 44 28 | 73 12 | 1873.79 | +11.32 | ------ | +12.85 | T. C. Hilgard. | C. and G. S. Rep., 1881, App. 9. |

Group 2.

| | | | | | | | | |
|---|---|---|---|---|---|---|---|---|
| Pawnal. | 42 46 | 72 59 | 1786.5 | + 5.87 | ------ | ------ | —— Williams. | Sill. Jour., Vol. 34, 1838. |
| Bellows Falls. | 43 09 | 72 28 | 1876.58 | +11.11 | +1.07 | +12.18 | F. E. Hilgard. | Nat. Acad. Sc. |
| White River Junction. | 43 40* | 72 18* | 1876.59 | +11.09 | +1.09 | +12.18 | F. E. Hilgard. | Nat. Acad. Sc. |
| West Hartford. | 43 42* | 72 22* | 1860.21 | +11.15 | +2.66 | +13.81 | J. M. Clark. | MS. in C. and G. S. Office. |
| Wells River. | 44 09 | 72 05 | 1876.60 | +11.91 | +1.03 | +12.94 | F. E. Hilgard. | Nat. Acad. Sc. |
| Ryegate. | 44 10 | 72 10 | 1801.5 | + 7.00 | +6.3 | +13.3 | J. Whitelaw. | Sill. Jour., Vol. 34, 1838. |
| Montpelier. | 44 17 | 72 36 | 1829.5 | +12.42 | +5.05 | +17.47(?) | (Exec. Doc.) | Sill. Jour., Vol. 34, 1838. |
| Saint Johnsbury. | 44 26 | 71 55 | 1837.5 | + 9.27 | +4.40 | +13.67 | A. C. Twining. | Sill. Jour., Vol. 34, 1838. |
| Essex Junction. | 44 31 | 73 06 | 1849.65 | + 9.40 | +3.21 | +12.61 | J. M. Clark. | MS. in C. and G. S. Office. |
| Barton. | 44 44 | 72 03 | 1837.5 | +10.85 | +4.67 | +15.52 | A. C. Twining. | Sill. Jour., Vol. 34, 1838. |
| *Swanton Falls. | 44 56 | 73 09 | 1850.29 | +11.47 | +3.45 | +14.92 | J. M. Clark. | MS. in C. and G. S. Office. |
| Derby. | 45 00 | 72 12 | 1876.61 | +13.30 | +0.93 | +14.23 | F. E. Hilgard. | Nat. Acad. Sc. |

* Corrected.

VIRGINIA.

Group 1.

| | | | | | | | | |
|---|---|---|---|---|---|---|---|---|
| Dismal Swamp, boundary stone. | 36 33 | 76 23 | 1886.95 | + 3.26 | +0.16 | + 3.42 | C. H. Sinclair. | MS. in C. and G. S. Office. |
| Hines, Va. and N. C. Boundary. | 36 33 | 76 34 | 1887.11 | + 3.08 | +0.15 | + 3.23 | C. H. Sinclair. | MS. in C. and G. S. Office. |
| Knott Island, north end. | 36 34 | 75 55 | 1873.30 | + 2.91 | +0.91 | + 3.82 | A. T. Mosman. | C. and G. S. Rep., 1881, App. 9. |
| Marion. | 36 48 | 81 31 | 1881.50 | + 0.03 | +0.48 | + 0.51 | J. B. Baylor. | C. and G. S. Rep., 1881, App. 9. |
| Norfolk, south of City Hall. | 36 50 | 76 17 | 1856.69 | + 1.56 | +1.85 | + 3.41 | C. A. Schott. | C. and G. S. Rep., 1881, App. 9. |
| Norfolk, near gas factory. | 36 51 | 76 18 | 1856.69 | + 1.65 | +1.85 | + 3.50 | C. A. Schott. | C. and G. S. Rep., 1881, App. 9. |

*Table of Observed Magnetic Declinations and Values reduced to the Year* 1890—Continued.

VIRGINIA—Continued.

| Name of station. | φ | λ | t | D | ΔD | $D_{1890.0}$ | Observer. | Reference. |
|---|---|---|---|---|---|---|---|---|
| | ° ′ | ° ′ | | ° | ° | ° | | |
| Wytheville. | 36 55 | 81 05 | 1881.48 | − 0.02 | +0.46 | + 0.44 | J. B. Baylor. | C. and G. S. Rep., 1881, App. 9. |
| Cape Henry Lighthouse (S. V. S.). | 36 56 | 76 00 | 1887.26 | + 3.34 | ------ | + 3.48 | J. B. Baylor. | MS. in C. and G. S. Office. |
| Old Point Comfort. | 37 00 | 76 18 | 1856.69 | + 1.24 | +1.85 | + 3.09 | C. A. Schott. | C. and G. S. Rep., 1881, App. 9. |
| Cape Charles. | 37 07 | 75 58 | 1856.68 | + 1.59 | +1.85 | + 3.44 | C. A. Schott. | C. and G. S. Rep., 1881, App. 9. |
| Petersburg, Roslyn. | 37 14 | 77 24 | 1871.78 | + 1.48 | +1.13 | + 2.61 | A. J. McIlvaine, jr. | C. and G. S. Rep., 1881, App. 9. |
| Williamsburg, W. and M. College (S. V. S.). | 37 16 | 76 43 | 1887.28 | + 3.05 | ------ | + 3.35 | J. B. Baylor. | MS. in C. and G. S. Office. |
| Scott. | 37 20 | 75 54 | 1856.68 | + 1.62 | +1.85 | + 3.47 | C. A. Schott. | C. and G. S. Rep., 1881, App. 9. |
| Wolftrap. | 37 24 | 76 15 | 1871.36 | + 2.82 | +1.09 | + 3.91 | A. T. Mosman. | C. and G. S. Rep., 1881, App. 9. |
| Richmond, Mayo's Island. | 37 32 | 77 26 | 1856.72 | + 0.24† | ------ | ------ | C. A. Schott. | C. and G. S. Rep., 1881, App. 9. |
| Joynes. | 37 42 | 75 37 | 1856.68 | + 2.06 | +2.14 | + 4.20 | C. A. Schott. | C. and G. S. Rep., 1881, App. 9. |
| Corner of Rockbridge, Alleghany and Botetourt Co's. | 37 46 | 79 34 | 1884.14 | + 1.08 | +0.33 | + 1.41 | J. B. Baylor. | MS. in C. and G. S. Office. |
| Tangier. | 37 48 | 75 59 | 1871.47 | + 3.05 | +1.18 | + 4.23 | A. T. Mosman. | C. and G. S. Rep., 1881, App. 9. |
| Covington. | 37 48 | 80 00* | 1881.46 | + 1.05 | +0.50 | + 1.55 | J. B. Baylor. | C. and G. S. Rep., 1881, App. 9. |
| Snead. | 37 58 | 75 26 | 1856.67 | + 2.31 | +2.14 | + 4.45 | C. A. Schott. | C. and G. S. Rep., 1881, App. 9. |
| Charlottesville. | 38 02 | 78 29 | 1887.26 | + 1.99 | +0.15 | + 2.14 | C. H. Sinclair. | MS. in C. and G. S. Office. |
| Greenwood. | 38 02 | 78 47 | 1880.43 | + 2.31 | +0.57 | + 2.88 | J. B. Baylor. | C. and G. S. Rep., 1881, App. 9. |
| Fredericksburg. | 38 18 | 77 27 | 1856.71 | + 1.04 | +2.04 | + 3.08 | C. A. Schott. | C. and G. S. Rep., 1881, App. 9. |
| Clark Mountain. | 38 19 | 78 00 | 1871.64 | + 1.78 | +1.22 | + 3.00 | C. O. Boutelle. | C. and G. S. Rep., 1881, App. 9. |
| Bull Run. | 38 53 | 77 42 | 1871.79 | + 4.36 | +1.29 | + 5.65 | C. O. Boutelle. | C. and G. S. Rep., 1881, App. 9. |
| Peach Grove. | 38 55 | 77 14 | 1869.84 | + 2.91 | +1.42 | + 4.33 | C. O. Boutelle. | C. and G. S. Rep., 1881, App. 9. |
| Strasburg. | 39 00 | 78 22 | 1884.49 | + 2.96 | +0.24 | + 3.20 | C. H. Sinclair. | MS. in C. and G. S. Office. |

* Corrected. † Local deflection.

*Table of Observed Magnetic Declinations and Values reduced to the Year* 1890—Continued.

VIRGINIA—Continued.

Group 2.

| Name of station. | φ | λ | t | D | ΔD | $D_{1890\text{-}0}$ | Observer. | Reference. |
|---|---|---|---|---|---|---|---|---|
| | ° ′ | ° ′ | | ° | ° | ° | | |
| South Boundary, on shore. | 36 33* | 75 52* | 1728.18 | + 3.00 | —0.05 | + 2.95 | W. Byrd. | Westover MS. |
| Brunswick and Greensville, N. C. line. | 36 36 | 80 50 | 1824.0 | — 0.92 | +3.62 | + 2.70 | —— Boye. | Boye's Map of Va., 1859. |
| Peach Bottom, N. C. line. | 36 36 | 81 00 | 1824.0 | — 3.83 | +3.62 | — 0.21 | —— Boye. | Boye's Map of Va., 1859. |
| Danville. | 36 37 | 79 20 | 1873.57 | + 1.27 | +0.97 | + 2.24 | F. E. Hilgard. | Nat. Acad. Sc. |
| Emory and Henry College, Washington Co. | 36 40 | 81 46 | 1881.2 | — 1.00 | +0.50 | — 0.50 | J. A. Davis. | MS. in C. and G. S Office. |
| Meadville, Halifax Co. | 36 47 | 78 57 | 1886.14 | + 1.50 | +0.21 | + 1.71 | M. French. | MS. in C. and G. S. Office. |
| Gosport Navy-Yard. | 36 49 | 76 17 | 1865.83 | + 2.63 | +1.35 | + 3.98 | W. Harkness. | Smith'n Cont's to Kn., 1873. |
| Norfolk. | 36 51 | 76 17 | 1880.08 | + 2.95 | +0.53 | + 3.48 | T. Bernard. | MS. in C. and G. S. Office. |
| Mount Airy. | 36 52 | 79 06 | 1873.64 | — 0.92 | +0.97 | + 0.05 | F. E. Hilgard. | Nat. Acad. Sc. |
| Wytheville. | 36 55 | 81 05 | 1882.33 | — 0.18 | +0.43 | + 0.25 | J. M. Gibboney. | MS. in C. and G. S. Office. |
| Christiansburg. | 37 11 | 80 18 | 1873.65 | — 0.58 | +0.96 | + 0.38 | F. E. Hilgard. | Nat. Acad. Sc. |
| Burkeville. | 37 13 | 78 12 | 1873.56 | + 2.00 | +1.01 | + 3.01 | F. E. Hilgard. | Nat. Acad. Sc. |
| Mobjack Bay. | 37 18 | 76 20 | 1824.0 | + 0.62 | +3.48 | + 4.10 | —— Boye. | Boye's Map of Va., 1859. |
| Lynchburg. | 37 25 | 79 09 | 1873.55 | + 0.56 | +1.01 | + 1.57 | F. E. Hilgard. | Nat. Acad. Sc. |
| Scottsville, Powhatan Co. | 37 30 | 77 54 | 1879.5 | + 2.50 | +0.63 | + 3.13 | County Surveyor. | MS. in C. and G. S. Office. |
| Richmond. | 37 32 | 77 26 | 1874.25 | + 2.26 | +0.98 | + 3.24 | W. Popp. | Rep. Ch. of Eng's., 1875. |
| Natural Bridge. | 37 35 | 79 22 | 1873.65 | + 0.08 | +0.98 | + 1.06 | F. E. Hilgard. | Nat. Acad. Sc. |
| Staunton. | 38 09 | 79 04 | 1873.66 | + 0.76 | +1.00 | + 1.76 | F. E. Hilgard. | Nat. Acad. Sc. |
| Harrisonburg. | 38 25 | 78 52 | 1873.67 | + 1.47 | +1.07 | + 2.54 | F. E. Hilgard. | Nat. Acad. Sc. |
| Culpeper. | 38 28 | 78 00 | 1873.53 | + 2.35 | +1.09 | + 3.44 | F. E. Hilgard. | Nat. Acad. Sc. |

WASHINGTON.

Group 1.

| | | | | | | | | |
|---|---|---|---|---|---|---|---|---|
| Vancouver, near old fort (S. V. S.). | 45 38 | 122 39 | 1881.82 | —20.89 | ------ | —21.00 | J. S. Lawson. | C. and G. S. Rep., 1881, App. 9. |
| Lower Cascades. | 45 39 | 122 00 | 1881.80 | —19.49 | +0.05 | —19.44 | J. S. Lawson. | C. and G. S. Rep., 1881, App. 9. |
| Walla Walla, near Court-House. (S. V. S.). | 46 04 | 118 21 | 1887.71 | —21.17 | ------ | —21.01 | E. Smith. | MS. in C. and G. S. Office. |
| Wallula. | 46 07 | 118 55 | 1881.75 | —19.93 | ------ | —20.17 | J. S. Lawson. | C. and G. S. Rep., 1881, App. 9. |

*Corrected.

*Table of Observed Magnetic Declinations and Values reduced to the Year* **1890—Continued.**

WASHINGTON.

Group 1.

| Name of station. | φ | λ | t | D | ΔD | $D_{1890.0}$ | Observer. | Reference. |
|---|---|---|---|---|---|---|---|---|
| | ° ′ | ° ′ | | ° | ° | ° | | |
| Ainsworth. | 46 14 | 119 03 | 1881.64 | —21.41 | +0.09 | —21.32 | J. S. Lawson. | C. and G. S. Rep., 1881, App. 9. |
| Cape Disappointment, beach (S. V. S.). | 46 17 | 124 03 | 1881.79 | —21.60 | ------ | —21.79 | H. E. Nichols. | C. and G. S. Rep., 1881, App. 9. |
| Pomeroy. | 46 31 | 117 40 | 1881.72 | —21.56 | +0.09 | —21.47 | J. S. Lawson. | C. and G. S. Rep., 1881, App. 9. |
| Sixty-mile Well. | 46 49 | 118 50 | 1881.65 | —22.78(?) | +0.09 | —22.69(?) | J. S. Lawson. | C. and G. S. Rep., 1881, App. 9. |
| Olympia. | 47 02 | 122 54 | 1881.84 | —21.58 | +0.04 | —21.54 | J. S. Lawson. | C. and G. S. Rep., 1881, App. 9. |
| Sprague. | 47 19 | 118 10 | 1881.65 | —22.92 | +0.09 | —22.83 | J. S. Lawson. | C. and G. S. Rep., 1881, App. 9. |
| Seattle (S. V. S.). | 47 36 | 122 20 | 1881.86 | —22.04 | ------ | —22.29 | J. S. Lawson. | C. and G. S. Rep., 1881, App. 9. |
| Seattle, University. | 47 37 | 122 20 | 1888.52 | —22.48 | | | E. Smith. | MS. in C. and G. S. Office. |
| Spokane Falls. | 47 43 | 117 25 | 1881.67 | —21.66 | +0.09 | —21.57 | J. S. Lawson. | C. and G. S. Rep., 1881, App. 9. |
| Port Townsend (S. V. S.). | 48 07 | 122 45 | 1881.88 | —21.45 | ------ | —21.54 | J. S. Lawson. | C. and G. S. Rep., 1881, App. 9. |
| Port Townsend, Marine Hospital. | 48 07 | 122 45 | 1888.56 | —22.81(?) | ------ | ------ | E. Smith. | MS. in C. and G. S. Office. |
| Nee-ah Bay, astr. sta'n (S. V. S.). | 48 22 | 124 38 | 1881.78 | —22.74 | ------ | —22.73 | H. E. Nichols. | C. and G. S. Rep., 1881, App. 9. |

Group 2.

| | | | | | | | | |
|---|---|---|---|---|---|---|---|---|
| Small Island, Columbia River. | 45 52 | 119 39 | 1860.5 | —18.00 | —0.25 | —18.25 | S. Garfielde. (?) | MS. in C. and G. S. Office. * |
| Chequees. | 45 56 | 121 23 | 1854.0 | —16.08 | —0.58 | —16.66 | J. Pope. | Stone's Mag. Var., 1878. |
| Columbia River, Township 6. | 46 00 | 118 58 | 1860.5 | —18.83 | —0.22 | —19.05 | S. Garfielde. (?) | MS. in C. and G. S. Office. * |
| Near Wallula. | 46 02 | 119 00 | 1860.0 | —19.77 | —0.24 | —20.01 | J. S. Harris. | NW. Bound. Comm. Map. |
| Old Fort Walla Walla. | 46 05 | 118 55 | 1861.5 | —20.50 | —0.20 | —20.70 | S. Garfielde. (?) | MS. in C. and G. S. Office. * |
| Monticello. | 46 07 | 122 55 | 1857.5 | —19.83 | —0.80 | —20.63 | S. Garfielde. (?) | MS. in C. and G. S. Office. * |
| Dry Creek. | 46 10 | 118 18 | 1860.0 | —20.22 | —0.24 | —20.46 | J. S. Harris. | NW. Bound. Comm. Map. |
| Near Mount Adams. | 46 12 | 121 03 | 1860.5 | —20.50 | —0.31 | —20.81 | S. Garfielde. (?) | MS. in C. and G. S. Office. * |

* MS. communication of Surveyor-General S. Garfielde; the latitude and longitudes I supplied as well as I could.—[SCH.]

*Table of Observed Magnetic Declinations and Values reduced to the Year* 1890—Continued.

WASHINGTON—Continued.

| Name of station. | φ | λ | t | D | ΔD | $D_{1890.0}$ | Observer. | Reference. |
|---|---|---|---|---|---|---|---|---|
| | ° ′ | ° ′ | | ° | ° | ° | | |
| Columbia Guide Meridian, Snake River. | 46 15 | 118 58 | 1860.5 | —20.00 | —0.22 | —20.22 | S. Garfielde. (?) | MS. in C. and G. S. Office. * |
| Mouth of Strong's River. | 46 15 | 123 23 | 1855.5 | —20.00 | —0.89 | —20.89 | S. Garfielde. (?) | MS. in C. and G. S. Office. * |
| Magnetic Station. | 46 18 | 117 51 | 1860.5 | —18.75 | —0.22 | —18.97 | S. Garfielde. (?) | MS. in C. and G. S. Office. * |
| Gray's Bay, Columbia River. | 46 18 | 123 42 | 1858.5 | —21.62 | —0.75 | —22.37 | S. Garfielde. (?) | MS. in C. and G. S. Office. * |
| Crossing Pataha Creek. | 46 23 | 117 34 | 1863.5 | —21.25 | —0.16 | —21.41 | S. Garfielde. (?) | MS. in C. and G. S. Office. * |
| Fort Simcoe. | 46 30 | 120 40 | 1865.5 | —21.50 | —0.28 | —21.78 | S. Garfielde. (?) | MS. in C. and G. S. Office. * |
| Tucanon River. | 46 32 | 118 00 | 1860.0 | —20.92 | —0.24 | —21.16 | J. S. Harris. | NW. Bound. Comm. Map. |
| Shoalwater Bay, east side. | 46 33 | 123 54 | 1856.5 | —20.50 | —1.16 | —21.66 | S. Garfielde. (?) | MS. in C. and G. S. Office. * |
| Crossing Snake River | 46 34 | 118 04 | 1860.5 | —19.00 | —0.22 | —19.22 | S. Garfielde. (?) | MS. in C. and G. S. Office. * |
| Crossing Columbia River. | 46 34 | 119 18 | 1863.5 | —21.50 | —0.16 | —21.66 | S. Garfielde. (?) | MS. in C. and G. S. Office. * |
| Leadbetter Point. | 46 36 | 124 03 | 1859.5 | —21.08 | —1.02 | —22.10 | S. Garfielde. (?) | MS. in C. and G. S. Office. * |
| Shoalwater Bay Light | 46 43 | 124 04 | 1858.5 | —21.08 | —1.06 | —22.14 | S. Garfielde. (?) | MS. in C. and G. S. Office. * |
| Cow Creek. | 46 53 | 118 10 | 1860.0 | —21.02 | —0.24 | —21.26 | J. S. Harris. | NW. Bound. Comm. Map. |
| Fourth Standard parallel and Gray's Harbor. | 46 54 | 124 01 | 1855.5 | —22.00 | —1.00 | —23.00 | S. Garfielde. (?) | MS. in C. and G. S. Office. * |
| Chehalis Point. | 46 55 | 124 07 | 1858.5 | —21.50 | —0.86 | —22.36 | S. Garfielde. (?) | MS. in C. and G. S. Office. * |
| Off Gray's Harbor. | 47 00 | 123 53 | 1792.96 | —18.00 | —4.6 | —22.6 | G. Vancouver. | Hansteen's Mag. der Erde, 1819. |
| North head of Gray's Harbor. | 47 03 | 124 05 | 1858.5 | —21.50 | —0.86 | —22.36 | S. Garfielde. (?) | MS. in C. and G. S. Office. * |
| Nisqually. | 47 07 | 122 38 | 1859.5 | —21.38 | —0.74 | —22.12 | R. W. Haig. | Phil. Trans. Roy. Soc., 1864. |
| Lugenbeel's Creek. | 47 09 | 118 07 | 1860.0 | —20.92 | —0.24 | —21.16 | J. S. Harris. | NW. Bound. Comm. Map. |
| Steilacoom. | 47 10 | 122 35 | 1856.5 | —21.50 | —0.88 | —22.38 | S. Garfielde. (?) | MS. in C. and G. S. Office. * |

* MS. communication of Surveyor-General S. Garfielde; the latitudes and longitudes I supplied, as well as I could.—[SCH.]

*Table of Observed Magnetic Declinations and Values reduced to the Year* 1890—Continued.

WASHINGTON—Continued.

| Name of station. | $\varphi$ | $\lambda$ | $t$ | D | $\Delta$D | $D_{1890.0}$ | Observer. | Reference. |
|---|---|---|---|---|---|---|---|---|
| | ° ′ | ° ′ | | ° | ° | ° | | |
| Intersection fifth standard parallel and Hood's Canal. | 47 15 | 123 08 | 1856.5 | —21.58 | —0.88 | —22.46 | S. Garfielde. (?) | MS. in C. and G. S. Office.* |
| Intersection fifth standard parallel and ocean. | 47 15 | 124 12 | 1859.5 | —21.75 | —0.82 | —22.57 | S. Garfielde. (?) | MS. in C. and G. S. Office.* |
| Magnetic Station. | 47 16 | 122 05 | 1855.5 | —21.00 | —0.65 | —21.65 | S. Garfielde. (?) | MS. in C. and G. S. Office.* |
| Head of Hood's Canal. | 47 28 | 122 50 | 1856.5 | —21.50 | —0.60 | —22.10 | S. Garfielde. (?) | MS. in C. and G. S. Office.* |
| Wenatshapaw. | 47 29 | 120 38 | 1854.0 | —18.83 | —0.42 | —19.25 | J. Pope. | Stone's Mag. Var., 1878. |
| Restoration Point. | 47 30 | 122 14 | 1792.40 | —19.60 | ------ | ------ | G. Vancouver. | Vancouver's Voy. of Discovery, 1798. |
| Magnetic Station. | 47 36 | 121 42 | 1865.5 | —22.33 | —0.24 | —22.57 | S. Garfielde. (?) | MS. in C. and G. S. Office.* |
| Seabeck, Hood's Canal. | 47 39 | 122 49 | 1859.5 | —22.00 | —0.17 | —22.17 | S. Garfielde. (?) | MS. in C. and G. S. Office.* |
| Peon's Prairie. | 47 43 | 117 14 | 1860.0 | —21.88 | —0.20 | —22.08 | J. S. Harris. | N. W. Bound. Comm. Map. |
| Port Madison, mill. | 47 43 | 122 33 | 1856.5 | —20.50 | —0.27 | —20.77 | S. Garfielde. (?) | MS. in C. and G. S. Office.* |
| Mouth of Skookum Chuck. | 47 45 | 122 40 | 1856.5 | —21.00 | —0.27 | —21.27 | S. Garfielde. (?) | MS. in C. and G. S. Office.* |
| Near Spokane Ferry. | 47 48 | 117 58 | 1860.0 | —22.12 | —0.20 | —22.32 | J. S. Harris. | N. W. Bound. Comm. Map. |
| Port Gamble, mill. | 47 51 | 122 34 | 1859.5 | —20.83 | —0.17 | —21.00 | S. Garfielde. (?) | MS. in C. and G. S. Office.* |
| Columbia Guide Meridian. | 47 55 | 118 58 | 1860.5 | —22.00 | —0.18 | —22.18 | S. Garfielde. (?) | MS. in C. and G. S. Office.* |
| Foulweather Bluff. | 47 56 | 122 36 | 1859.5 | —20.50 | —0.17 | —20.67 | S. Garfielde. (?) | MS. in C. and G. S. Office.* |
| Point Elliott. | 47 57 | 122 18 | 1855.5 | —21.50 | —0.30 | —21.80 | S. Garfielde. (?) | MS. in C. and G. S. Office.* |
| Chunikane River. | 48 00 | 117 45 | 1861.50 | —21.47 | —0.15 | —21.62 | R. W. Haig. | Phil. Trans. Roy. Soc., 1864. |
| Port Discovery, mill. | 48 01 | 122 51 | 1862.50 | —22.00 | +0.20 | —21.80 | S. Garfielde. (?) | MS. in C. and G. S. Office.* |
| Admiralty Head, Whitbey Island. | 48 09 | 122 41 | 1857.5 | —21.90 | +0.10 | —21.80 | S. Garfielde. (?) | MS. in C. and G. S. Office.* |
| Dungeness Light. | 48 11 | 123 06 | 1858.5 | —21.50 | +0.12 | —21.38 | S. Garfielde. (?) | MS. in C. and G. S. Office.* |
| Chattam Bay. | 48 15 | 124 16 | 1864.5 | —22.50 | 0.42 | —22.92 | S. Garfielde. (?) | MS. in C. and G. S. Office.* |

* MS. communication of Surveyor-General S. Garfielde; the latitudes and longitudes I supplied, as well as I could.—[SCH.]

*Table of Observed Magnetic Declinations and Values reduced to the Year* 1890—Continued.

WASHINGTON—Continued.

| Name of station. | φ | λ | t | D | ΔD | $D_{1890.0}$ | Observer. | Reference. |
|---|---|---|---|---|---|---|---|---|
| | ° ′ | ° ′ | | ° | ° | ° | | |
| Deception Pass, north of Whidbey Island. | 48 24 | 122 40 | 1858.5 | —21.75 | +0.12 | —21.63 | S. Garfielde.(?) | MS. in C. and G. S. Office.* |
| Nee-ah Island, north point. | 48 25 | 124 36 | 1841.50 | —22.50 | ------ | —22.73 | (Map.) | U. S. Expl. Exp. |
| Colville Depot. | 48 33 | 117 52 | 1860.5 | —22.52 | —0.13 | —22.65 | J. S. Harris. | N. W. Bound. Comm. Map. |
| Guide Meridian, Bellingham Bay. | 48 33 | 122 27 | 1859.5 | —22.15 | +0.14 | —22.01 | S. Garfielde.(?) | MS. in C. and G. S. Office.* |
| Colville Barracks. | 48 40 | 118 05 | 1861.50 | —21.67 | —0.10 | —21.77 | R. W. Haig. | Phil. Trans. Roy. Soc., 1864. |
| Fort Bellingham. | 48 47 | 122 32 | 1859.5 | —22.50 | +0.14 | —22.36 | S. Garfielde.(?) | MS. in C. and G. S. Office.* |
| Birch Bay. | 48 54 | 122 45 | 1792.50 | —19.50 | —4.0 | —23.5 | G. Vancouver. | Vancouver's Voy. of Discovery, 1798. |
| Magnetic Station. | 48 59 | 121 42 | 1860.0 | —22.78 | —0.15 | —22.93 | J. S. Harris. | N. W. Bound. Comm. Map. |
| Do. | 48 59 | 121 57 | 1860.0 | —22.65 | —0.15 | —22.80 | J. S. Harris. | N. W. Bound. Comm. Map. |
| Point Roberts. | 48 59 | 123 03 | 1859.07 | —22.63 | —0.13 | —22.76 | J. S. Harris and S. Garfielde.(?) | N. W. Bound. Comm. Map and MS.* |
| Magnetic Station. | 49 00 | 118 44 | 1860.0 | —22.12 | —0.15 | —22.27 | J. S. Harris. | N. W. Bound. Comm. Map. |
| Do. | 49 00 | 119 35 | 1860.0 | —23.57 | —0.15 | —23.72 | J. S. Harris. | N. W. Bound. Comm. Map. |
| Do. | 49 00 | 121 23 | 1860.0 | —22.15 | —0.15 | —22.30 | J. S. Harris. | N. W. Bound. Comm. Map. |

* MS. communication of Surveyor-General S. Garfielde; the latitudes and longitudes I supplied, as well as I could.—[SCH.]

WEST VIRGINIA.

Group I.

| | | | | | | | | |
|---|---|---|---|---|---|---|---|---|
| Alderson. | 37 45 | 80 40 | 1881.45 | + 0.92 | +0.52 | + 1.44 | J. B. Baylor. | C. and G. S. Rep., 1881, App. 9. |
| Charleston. | 38 21 | 81 38 | 1881.43 | + 1.05 | +0.51 | + 1.56 | J. B. Baylor. | C. and G. S. Rep., 1881, App. 9. |
| Point Pleasant. | 38 50 | 82 09 | 1864.08 | — 1.58 | +1.59 | + 0.01 | A. T. Mosman. | C. and G. S. Rep., 1881, App. 9. |
| Parkersburg. | 39 16 | 81 34 | 1881.41 | + 0.12 | +0.59 | + 0.71 | J. B. Baylor. | C. and G. S. Rep., 1881, App. 9. |
| Clarksburg. | 39 17 | 80 20 | 1880.94 | + 1.76 | +0.63 | + 2.39 | J. B. Baylor. | C. and G. S. Rep., 1881, App. 9. |
| Grafton. | 39 21 | 80 02 | 1864.03 | + 1.86 | +1.80 | + 3.66 | A. T. Mosman. | C. and G. S. Rep., 1881, App. 9. |
| Cameron. | 39 50 | 80 34 | 1864.04 | — 0.40 | +1.80 | + 1.40 | A. T. Mosman. | C. and G. S. Rep., 1881, App. 9. |
| Wheeling. | 40 03 | 80 44 | 1881.40 | + 0.02 | +0.58 | + 0.60 | J. B. Baylor. | C. and G. S. Rep., 1881, App. 9. |

*Table of Observed Magnetic Declinations and Values reduced to the Year* 1890—**Continued.**

WEST VIRGINIA—Continued.

Group 2.

| Name of station. | φ | λ | t | D | ΔD | $D_{1890.0}$ | Observer. | Reference. |
|---|---|---|---|---|---|---|---|---|
| | ° ′ | ° ′ | | ° | ° | ° | | |
| Bull Town, Braxton Co. | 38 48 | 80 31 | 1824.0 | − 2.17 | +3.61 | + 1.44 | —— Boye. | Boye's Map of Va., 1859. |
| North Branch of Potomac. | 39 18 | 79 19 | 1824.0 | − 1.58 | +3.83 | + 2.25 | —— Boye. | Boye's Map of Va., 1859. |
| Pruntytown, Taylor Co. | 39 20 | 80 05 | 1883.3 | + 2.55 | +0.46 | + 3.01 | R. McPheeters. | MS. in C. & G. S. Office. |
| Martinsburg. | 39 27 | 77 57 | 1873.52 | + 2.86 | +1.23 | + 4.09 | F. E. Hilgard. | Nat. Acad. Sci. |
| Cumberland Gap. | 39 38* | 78 44* | 1824.0 | −4.58(?) | +3.83 | −0.75(?) | —— Boye. | Boye's Map of Va., 1859. |

*Corrected.

WISCONSIN.

Group 1.

| | | | | | | | | |
|---|---|---|---|---|---|---|---|---|
| Milwaukee, near North Point Lighthouse (S. V. S.). | 43 04 | 87 53 | 1888.65 | − 4.37 | ------ | − 4.53 | J. B. Baylor. | MS. in C. and G. S. Office. |
| Madison, University Farm. | 43 04 | 89 25 | 1888.66 | − 5.89 | +0.11 | − 5.78 | J. B. Baylor. | MS. in C. and G. S. Office. |
| La Crosse. | 43 49 | 91 15 | 1877.73 | − 8.63 | +1.08 | − 7.55 | A. Braid. | C. and G. S. Rep., 1881, App. 9. |
| Superior, City (S. V. S.) | 46 40 | 92 04 | 1880.64 | − 9.76 | ------ | − 9.87 | J. B. Baylor. | C. and G. S. Rep., 1881, App. 9. |

Group 2.

| | | | | | | | | |
|---|---|---|---|---|---|---|---|---|
| Kenosha. | 42 35 | 87 49 | 1872.5 | − 5.00 | +1.26 | − 3.74 | H. Custer. | P. P., U. S. Eng's, No. 24, 1882. |
| Monroe. | 42 37 | 89 41 | 1859.61 | − 8.41 | +2.02 | − 6.39 | J. T. Dodge. | MS. in C. and G. S. Office. |
| Racine. | 42 44 | 87 48 | 1872.5 | − 4.48 | +1.26 | − 3.22 | H. Custer. | P. P., U. S. Eng's, No. 24, 1882. |
| Mineral Point. | 42 51 | 89 58 | 1839.84 | − 8.67 | +2.65 | − 6.02 | ---------- | Locke's Rep. on Min. Lands, 1839–'40. |
| Parish. | 42 58 | 90 10 | 1839.82 | − 8.92 | +2.65 | − 6.27 | ---------- | Locke's Rep. on Min. Lands, 1839–'40. |
| Trout Brook. | 42 59 | 90 45 | 1839.82 | − 9.00 | +2.65 | − 6.35 | ---------- | Locke's Rep. on Min. Lands, 1839–'40. |
| Campbell. | 43 01 | 89 26 | 1839.84 | − 8.65 | +2.65 | − 6.00 | ---------- | Locke's Rep. on Min. Lands, 1839–'40. |
| Blue Mound. | 43 01 | 89 38 | 1839.83 | − 8.63 | +2.65 | − 5.98 | ---------- | Locke's Rep. on Min. Lands, 1839–'40. |
| Fort Crawford. | 43 03 | 90 52 | 1823.5 | − 8.82 | +2.50 | − 6.32 | S. H. Long. | Sill. Jour., Vol. 34, 1838. |
| New Lisbon. | 43 08 | 88 12 | 1884.72 | − 4.92 | +0.47 | − 4.45 | W. Powrie. | MS. in C. and G. S. Office. |

*Table of Observed Magnetic Declinations and Values reduced to the Year* 1890—Continued.

WISCONSIN—Continued.

| Name of station. | φ | λ | t | D | ΔD | $D_{1890.0}$ | Observed. | Reference. |
|---|---|---|---|---|---|---|---|---|
| | ° ′ | ° ′ | | ° | ° | ° | | |
| Seven miles south of Sheboygan. | 43 39 | 87 44 | 1870.80 | — 8.38 | +1.62 | — 6.76 | J. W. Cuyler. | P. P., U. S. Eng's, No. 24, 1882. |
| Sheboygan. | 43 45 | 87 42 | 1865.6 | — 5.25 | +1.99 | — 3.26 | A. W. Unthank. | P. P., U. S. Eng's, No. 24, 1882. |
| Two miles south of Manitowoc. | 44 04 | 87 39 | 1870.63 | — 5.05 | +1.63 | — 3.42 | J. P. Mayer. | P. P., U. S. Eng's, No. 24, 1882. |
| Raley's Point. | 44 11 | 87 31 | 1866.77 | — 6.93 | +1.91 | — 5.02 | H. Gillman. | P. P., U. S. Eng's, No. 24, 1882. |
| Kewaunee. | 44 28 | 87 30 | 1866.66 | — 6.20 | +1.91 | — 4.29 | H. Gillman. | P. P., U. S. Eng's, No. 24, 1882. |
| Green Bay, near Fort Howard. | 44 31 | 87 54 | 1884.50 | — 4.43 | +0.48 | — 3.95 | C. S. Woodard. | MS. in C. and G. S. Office. |
| Two and a half miles south of Sable Point. | 44 32 | 87 56 | 1843.5 | — 6.43 | +3.00 | — 3.43 | J. H. Simpson. | P. P., U. S. Eng's, No. 24, 1882. |
| Head of Green Bay. | 44 33 | 87 59 | 1865.63 | — 5.42 | +1.99 | — 3.43 | O. N. Chaffee. | P. P., U. S. Eng's, No. 24, 1882. |
| Ahnepee. | 44 36 | 87 26 | 1866.60 | — 5.55 | +1.91 | — 3.64 | H. Gillman. | P. P., U. S. Eng's, No. 24, 1882. |
| Long Tail Point Light. | 44 36 | 87 54 | 1845.5 | — 6.42 | +2.95 | — 3.47 | (Chart.) | U. S. Lake Survey. |
| One mile north of Station Clay Banks. | 44 42 | 87 21 | 1866.57 | — 6.30 | +1.92 | — 4.38 | H. Gillman. | P. P., U. S. Eng's, No. 24, 1882. |
| Near Red River. | 44 43 | 87 43 | 1865.75 | — 6.13 | +1.98 | — 4.15 | A. C. Lamson. | P. P., U. S. Eng's, No. 24, 1882. |
| One mile north of Sugar Creek. | 44 48 | 87 39 | 1843.5 | — 6.15 | +2.95 | — 3.20 | J. H. Simpson. | P. P., U. S. Eng's, No. 24, 1882. |
| Little Sturgeon Bay. | 44 51 | 87 33 | 1865.70 | — 6.27 | +1.98 | — 4.29 | A. C. Lamson. | P. P., U. S. Eng's, No. 24, 1882. |
| Whitefish Point. | 44 52 | 87 12 | 1866.5 | — 5.82 | +1.92 | — 3.90 | O. N. Chaffee. | P. P., U. S. Eng's, No. 24, 1882. |
| Oconto. | 44 53 | 87 50 | 1865.6 | — 5.35 | +1.99 | — 3.36 | A. F. Chaffee. | P. P., U. S. Eng's, No. 24, 1882. |
| Whitefish Bay. | 44 54 | 87 12 | 1866.49 | — 5.82 | +1.92 | — 3.90 | H. Gillman. | P. P., U. S. Eng's, No. 24, 1882. |
| Sturgeon Bay, north side. | 44 54 | 87 24 | 1865.52 | — 4.60 | +2.00 | — 2.60 | A. C. Lamson. | P. P., U. S. Eng's, No. 24, 1882. |
| Four miles north of Big Sturgeon Bay. | 44 58 | 87 22 | 1843.5 | — 4.98 | +2.95 | — 2.03 | J. H. Simpson. | P. P., U. S. Eng's, No. 24, 1882. |
| Peshtigo. | 44 59 | 87 38 | 1865.6 | — 4.33 | +1.99 | — 2.34 | A. F. Chaffee. | P. P., U. S. Eng'r, No. 24, 1882. |
| Egg Harbor. | 45 03 | 87 16 | 1865.63 | — 4.82 | +1.99 | — 2.83 | H. C. Penny. | P. P., U. S. Eng's, No. 24, 1882. |
| Green Island. | 45 03 | 87 30 | 1863.8 | — 4.53 | +2.10 | — 2.43 | D. F. Henry. | P. P., U. S. Eng's, No. 24, 1882. |
| Bayley's Harbor Lt. H. | 45 04 | 87 05 | 1863.8 | — 4.43 | +2.10 | — 2.33 | J. R. Mayer. | P. P., U. S. Eng's, No. 24, 1882. |

*Table of Observed Magnetic Declinations and Values reduced to the Year* 1890—Continued.

WISCONSIN—Continued.

| Name of station. | φ | λ | t | D | ΔD | $D_{1890.0}$ | Observer. | Reference. |
|---|---|---|---|---|---|---|---|---|
| | ° ′ | ° ′ | | ° | ° | ° | | |
| Ephraim. | 45 09 | 87 10 | 1863.58 | — 4.70 | +2.11 | — 2.59 | H. Gillman. | P. P., U. S. Eng's, No. 24, 1882. |
| Chamber's Island. | 45 10 | 87 20 | 1864.6 | — 3.80 | +2.05 | — 1.75 | A. Molitor. | P. P., U. S. Eng's, No. 24, 1882. |
| Rawley's Bay. | 45 12 | 87 03 | 1863.7 | — 4.37 | +2.11 | — 2.26 | J. R. Mayer. | P. P., U. S. Eng's, No. 24, 1882. |
| Hedgehog Harbor. | 45 17 | 87 02 | 1863.64 | — 4.63 | +2.11 | — 2.52 | H. Gillman. | P. P., U. S. Eng's, No. 24, 1882. |
| Detroit Island. | 45 19 | 86 55 | 1862.83 | — 4.23 | +2.16 | — 2.07 | J. R. Mayer. | P. P., U. S. Eng's, No. 24, 1882. |
| Washington Harbor. | 45 24 | 86 56 | 1863.69 | — 3.63 | +2.11 | — 1.52 | S. W. Robinson. | P. P., U. S. Eng's, No. 24, 1882. |
| Washington Island. | 45 25 | 86 56 | 1865.5 | — 3.50 | +2.00 | — 1.50 | ---------- | P. P., U. S. Eng's, No. 24, 1882. |
| Oronto River. | 46 34 | 90 26 | 1868.60 | — 6.97 | +1.39 | — 5.58 | H. Gillman. | P. P., U. S. Eng's, No. 24, 1882. |
| Bay City. | 46 35 | 90 52 | 1869.5 | — 8.17 | +1.34 | — 6.83 | A. C. Lamson. | P. P., U. S. Eng's, No. 24, 1882. |
| Bad River. | 46 38 | 90 39 | 1869.5 | — 7.50 | +1.34 | — 6.16 | A. C. Lamson. | P. P., U. S. Eng's, No. 24, 1882. |
| Chaquamegon Point. | 46 41 | 90 45 | 1869.5 | — 7.60 | +1.34 | — 6.26 | A. C. Lamson. | P. P., U. S. Eng's, No. 24, 1882. |
| Madeline Island, south point. | 46 45 | 90 55 | 1824.5 | — 9.80 | ------ | ------ | H. W. Bayfield. | Phil. Trans. Roy. Soc., 1872. |
| Magdalena Island, north end. | 46 50 | 90 35 | 1869.5 | — 7.13 | +1.34 | — 5.79 | A. C. Lamson. | P. P., U. S. Eng's, No. 24, 1882. |
| Magdalena Island, north side. | 46 50 | 90 40 | 1869.5 | — 7.63 | +1.34 | — 6.29 | A. C. Lamson. | P. P., U. S. Eng's, No. 24, 1882. |
| Little Island, NE. of Michigan Isld. | 46 54 | 90 26 | 1869.5 | — 6.35 | +1.34 | — 5.01 | A. F. Chaffee. | P. P., U. S. Eng's, No. 24, 1882. |

WYOMING. Group I.

| | | | | | | | | |
|---|---|---|---|---|---|---|---|---|
| Cheyenne. | 41 08 | 104 49 | 1878.70 | —15.34* | +0.59 | —14.75 | J. B. Baylor. | C. and G. S. Rep., 1881, App. 9. |
| Sherman. | 41 08 | 105 24 | 1872.58 | —15.88 | +0.82 | —15.06 | W. Suess (R. D. Cutts). | C. and G. S. Rep., 1881, App. 9. |
| Laramie. | 41 19 | 105 36 | 1878.73 | —15.12 | +0.59 | —14.53 | J. B. Baylor. | C. and G. S. Rep., 1881, App. 9. |
| Green River. | 41 32 | 109 29 | 1878.77 | —16.77* | +0.34 | —16.43 | J. B. Baylor. | C. and G. S. Rep., 1881, App. 9. |
| Carter. | 41 36 | 110 26 | 1878.78 | —17.10 | +0.34 | —16.76 | J. B. Baylor. | C. and G. S. Rep., 1881, App. 9. |

*Corrected.

*Table of Observed Magnetic Declinations and Values reduced to the Year* 1890—Continued.

WYOMING—Continued.

| Name of station. | φ | λ | t | D | ΔD | $D_{1890\cdot0}$ | Observer. | Reference. |
|---|---|---|---|---|---|---|---|---|
| | ° ′ | ° ′ | | ° | ° | ° | | |
| Point of Rocks. | 41 43 | 108 58 | 1878.76 | —16.30 | +0.40 | —15.90 | J. B. Baylor. | C. and G. S. Rep., 1881, App. 9. |
| Fort F. Steele. | 41 47 | 106 57 | 1878.74 | —16.17* | +0.46 | —15.71 | J. B. Baylor. | C. and G. S. Rep., 1881, App. 9. |
| Creston. | 41 48 | 107 57 | 1878.75 | —16.06 | +0.46 | —15.60 | J. B. Baylor. | C. and G. S. Rep., 1881, App. 9. |
| Rock Creek. | 41 50 | 106 05 | 1878.73 | —15.76 | +0.46 | —15.30 | J. B. Baylor. | C. and G. S. Rep., 1881, App. 9. |
| Northeast corner of Wy. T. | 45 00 | 104 03 | 1882.45 | —15.65 | +0.40 | —15.25 | B. A. Colonna. | MS. in C. and G. S. Office. |
| Little Missouri River Station. | 45 00 | 104 25 | 1882.49 | —16.19 | +0.40 | —15.79 | B. A. Colonna. | MS. in C. and G. S. Office. |
| Mile Posts 283–284. | 45 00 | 105 20 | 1882.51 | —16.92 | +0.40 | —16.52 | B. A. Colonna. | MS. in C. and G. S. Office. |
| Mile Post 185. | 45 00 | 107 21 | 1882.54 | —17.96 | +0.32 | —17.64 | B. A. Colonna. | MS. in C. and G. S. Office. |
| Mile Post 42. | 45 00 | 110 12 | 1882.63 | —19.52 | +0.32 | —19.20 | B. A. Colonna. | MS. in C. and G. S. Office. |

Group 2.

| | | | | | | | | |
|---|---|---|---|---|---|---|---|---|
| Fort Sanders. | 41 17 | 105 35 | 1873.5 | —15.50 | +0.78 | —14.72 | G. M. Wheeler. | Tab. Geo. Pos. U. S. Eng's, 1883. |
| Fort Bridger. | 41 20 | 110 24 | 1858.9 | —16.62† | +0.33 | —16.29 | J. H. Simpson. | Stone's Mag. Var., 1878. |
| Green River, Court House. | 41 32 | 109 28 | 1878.65 | —16.96 | +0.34 | —16.62 | T. E. Thorpe. | Proc. Roy. Soc., 1880. |
| Chugwater Creek. | 41 45 | 104 50 | 1877.53 | —15.31 | +0.64 | —14.67 | W. S. Stanton. | Rep. Ch. of Eng's, 1878. |
| Bear River. | 41 54 | 111 00 | 1877.5 | —18.22 | +0.34 | —17.88 | S. E. Tillman. | Rep. Ch. of Eng's, 1878. |
| Chugsprings. | 41 59 | 104 51 | 1877.53 | —15.44 | +0.64 | —14.80 | W. S. Stanton. | Rep. Ch. of Eng's, 1878. |
| Fort Laramie. | 42 12 | 104 34 | 1877.73 | —15.41 | +0.63 | —14.78 | W. S. Stanton. | Rep. Ch. of Eng's, 1878. |
| Southeast base Laramie Peak. | 42 15 | 105 23 | 1877.72 | —16.71 | +0.63 | —16.08 | W. S. Stanton. | Rep. Ch. of Eng's, 1878. |
| Little Sandy Creek. | 42 15 | 109 40 | 1858.8 | —17.73† | +0.53 | —17.20 | J. H. Simpson. | Stone's Mag. Var., 1878. |
| Sweetwater River. | 42 30 | 108 35 | 1858.8 | —16.93† | +0.53 | —16.40 | J. H. Simpson. | Stone's Mag. Var., 1878. |
| Camp Aspen Hut. | 42 30 | 108 58 | 1858.47 | —16.70 | +0.53 | —16.17 | W. H. Wagner. | MS. in C. and G. S. Office. |
| Mouth of Piney Cañon. | 42 32 | 109 58 | 1858.56 | —17.88 | +0.53 | —17.35 | W. H. Wagner. | MS. in C. and G. S. Office. |

*Corrected. †Corrected by + 3°—[SCH.].

*Table of Observed Magnetic Declinations and Values reduced to the Year* 1890—Continued.

WYOMING—Continued.

| Name of station. | $\varphi$ | $\lambda$ | $t$ | D | $\Delta$D | $D_{1890.0}$ | Observer. | Reference. |
|---|---|---|---|---|---|---|---|---|
| | ° ′ | ° ′ | | ° | ° | ° | | |
| La Bonté River. | 42 35 | 105 22 | 1858.8 | —15.38* | +1.02 | —14.36 | J. H. Simpson. | Stone's Mag. Var., 1878. |
| Sweetwater River. | 42 38 | 107 25 | 1858.8 | —16.68* | +0.72 | —15.96 | J. H. Simpson. | Stone's Mag. Var., 1878. |
| Greasewood Creek. | 42 40 | 107 07 | 1858.8 | —17.40* | +0.72 | —16.68 | J. H. Simpson. | Stone's Mag. Var., 1878. |
| Smoky Creek. | 42 47 | 111 04 | 1877.5 | —18.42 | +0.34 | —18.08 | S. E. Tillman. | Rep. Ch. of Eng's, 1878. |
| West of Deer Creek. | 42 53 | 105 57 | 1858.8 | —15.47* | +0.92 | —14.55 | J. H. Simpson. | Stone's Mag. Var., 1878. |
| Popo Agie River. | 43 00 | 108 28 | 1860.5 | —15.20 | +0.55 | —14.65 | ---------- | Mo. and Yel. St. Expl. Exp., 1865. |
| Bad Water River. | 43 08 | 107 53 | 1860.5 | —16.00 | +0.55 | —15.45 | ---------- | Mo. and Yel. St. Expl. Exp., 1865. |
| Lance Creek. | 43 19 | 104 20 | 1877.59 | —15.24 | +0.50 | —14.74 | W. S. Stanton. | Rep. Ch. of Eng's, 1878. |
| Deer Creek. | 43 19 | 105 52 | 1859.5 | —16.38 | +0.92 | —15.46 | ---------- | Mo. and Yel. St. Expl. Exp., 1865. |
| Wind River. | 43 32 | 110 00 | 1860.5 | —19.50 | +0.55 | —18.95 | ---------- | Mo. and Yel, St. Expl. Exp., 1865. |
| Snake River, near mouth of Gros Ventres Creek. | 43 32 | 110 49 | 1872.75 | —17.67 | +0.40 | —17.27 | F. V. Hayden. | Geol. Sur. Ter., 1873. |
| South Cheyenne River. | 43 33 | 104 09 | 1877.60 | —15.67 | +0.49 | —15.18 | W. S. Stanton. | Rep. Ch. of Eng's, 1878. |
| Pass no Pass. | 43 33 | 110 23 | 1860.5 | —20.75 | +0.55 | —20.20 | ---------- | Mo. and Yel. St. Exp., 1865. |
| Powder River. | 43 38 | 106 33 | 1859.5 | —16.53 | +0.92 | —15.61 | ---------- | Mo. and Yel. St. Exp., 1865. |
| A small brook. | 43 39 | 105 52 | 1877.65 | —16.72 | +0.50 | —16.22 | W. S. Stanton. | Rep. Ch. of Eng's, 1878. |
| Camp 44. | 43 40 | 110 43 | 1872.74 | —17.63 | +0.40 | —17.23 | F. V. Hayden. | Geol. Sur. Ter., 1873. |
| Teton Cañon, 12 miles W. of Mt. Hayden. | 43 46 | 111 00 | 1872.56 | —17.92 | +0.40 | —17.52 | F. V. Hayden. | Geol. Sur. Ter., 1873. |
| Fort McKinney. | 43 47 | 106 15 | 1877.66 | —17.01 | +0.50 | —16.51 | W. S. Stanton. | Rep. Ch. of Eng's, 1878. |
| East Foot of Tetons. | 43 47 | 110 43 | 1872.74 | —17.70 | +0.40 | —17.30 | F. V. Hayden. | Geol. Sur. Ter., 1873. |
| A Swale. | 43 51 | 105 37 | 1877.64 | —16.33 | +0.50 | —15.83 | W. S. Stanton. | Rep. Ch. of Eng's, 1878. |
| Camp 42, foot of Jackson Lake. | 43 52 | 110 41 | 1872.73 | —17.93 | +0.40 | —17.53 | F. V. Hayden. | Geol. Sur. Ter., 1873. |

* Corrected by + 3°—[SCH.].

*Table of Observed Magnetic Declinations and Values reduced to the Year* 1890—Continued.

WYOMING—Continued.

| Name of station. | φ | λ | t | D | DΔ | $D_{1890.0}$ | Observer. | Reference. |
|---|---|---|---|---|---|---|---|---|
| | ° ′ | ° ′ | | ° | ° | ° | | |
| Beaver Creek Valley. | 43 53 | 104 06 | 1877.60 | −15.87 | +0.50 | −15.37 | W. S. Stanton. | Rep. Ch. of Eng's, 1878. |
| Mouth of Lewis Fork. | 44 08 | 110 40 | 1872.71 | −18.13 | +0.40 | −17.73 | F. V. Hayden. | Geol. Sur. Ter., 1873. |
| Beula Lake. | 44 09 | 110 44 | 1872.71 | −18.92 | +0.40 | −18.52 | F. V. Hayden. | Geol. Sur. Ter., 1873. |
| Belle Fourche River. | 44 11 | 105 05 | 1877.64 | −16.15 | +0.50 | −15.65 | W. S. Stanton. | Rep. Ch. of Eng's, 1878. |
| Beehler's Fork of Fall River. | 44 11 | 110 58 | 1872.59 | −18.25 | +0.40 | −17.85 | F. V. Hayden. | Geol. Sur. Ter., 1873. |
| Lewis Fork, near Lewis Lake. | 44 14 | 110 33 | 1872.70 | −18.22 | +0.40 | −17.82 | F. V. Hayden. | Geol. Sur. Ter., 1873. |
| Shoshone Lake. | 44 21 | 110 40 | 1872.68 | −18.25 | +0.40 | −17.85 | F. V. Hayden. | Geol. Sur. Ter., 1873. |
| Gilliss Creek. | 44 27 | 104 36 | 1877.64 | −16.19 | +0.50 | −15.69 | W. S. Stanton. | Rep. Ch. of Eng's, 1878. |
| Upper Geyser Basin. | 44 28 | 110 30 | 1872.63 | −18.48 | +0.40 | −18.08 | F. V. Hayden. | Geol. Sur. Ter., 1873. |
| Redwater Creek. | 44 32 | 104 06 | 1877.63 | −15.67 | +0.50 | −15.17 | W. S. Stanton. | Rep. Ch. of Eng's, 1878. |
| Lower Geyser Basin. | 44 34 | 110 55 | 1872.62 | −18.48 | +0.40 | −18.08 | F. V. Hayden. | Geol. Sur. Ter., 1873. |
| Yellowstone Falls. | 44 44 | 110 34 | 1872.58 | −19.00 | +0.40 | −18.60 | F. V. Hayden. | Geol. Sur. Ter., 1873. |
| Tongue River. | 44 53 | 107 14 | 1859.5 | −16.50 | +0.92 | −15.58 | J. Mullan. | Mo. and Yel. St. Expl. Exp., 1865. |
| Hot Springs, White Mountains. | 44 58 | 110 43 | 1872.57 | −19.28 | +0.40 | −18.88 | F. V. Hayden. | Geol. Sur., Ter. 1873. |

BERMUDAS AND WEST INDIA ISLANDS, CENTRAL AMERICA AND MEXICO TO LONGITUDE 100° W.

Group 1.

| | | | | | | | | |
|---|---|---|---|---|---|---|---|---|
| La Union, San Salvador. | 13 17 | 87 46 | 1880.84 | − 5.98 | +0.35 | − 5.63 | H. E. Nichols. | C. and G. S. Rep., 1881, App. 9. |
| Acajutla, San Salvador. | 13 34 | 89 51 | 1880.85 | − 6.26 | +0.35 | − 5.91 | H. E. Nichols. | C. and G. S. Rep., 1881, App. 9. |
| Champerico, Guatemala. | 14 18 | 91 55 | 1880.86 | − 7.01 | +0.35 | − 6.66 | H. E. Nichols. | C. and G. S. Rep., 1881, App. 9. |
| Port Escondido, Mexico. | 16 04 | 96 57 | 1880.88 | − 7.70 | +0.40 | − 7.30 | H. E. Nichols. | C. and G. S. Rep., 1881, App. 9. |
| Salina Cruz, Tehuantepec. | 16 10 | 95 27 | 1880.87 | − 7.29 | +0.40 | − 6.89 | H. E. Nichols. | C. and G. S. Rep., 1881, App. 9. |
| Acapulco, Mexico (S. V. S.). | 16 49 | 99 56 | 1880.90 | − 7.94 | ------ | − 7.64 | H. E. Nichols. | C. and G. S. Rep., 1881, App. 9. |
| Belize, British Honduras. | 17 29 | 88 12 | 1879.29 | − 5.79 | +0.50 | − 5.29 | S. M. Ackley. | C. and G. S. Rep., 1881, App. 9. |

*Table of Observed Magnetic Declinations and Values reduced to the Year* 1890—Continued.

BERMUDAS AND WEST INDIA ISLANDS, ETC.—Continued.

| Name of station. | φ | λ | t | D | ΔD | $D_{1890.0}$ | Observer. | Reference. |
|---|---|---|---|---|---|---|---|---|
| | ° ′ | ° ′ | | ° | ° | ° | | |
| Coatzacoalcos, Mexico. | 18 08 | 94 26 | 1880.14 | — 7.18 | +0.60 | — 6.58 | S. M. Ackley. | C. and G. S. Rep., 1881, App. 9. |
| Laguna de Terminos, Mexico. | 18 38 | 93 00 | 1880.17 | — 6.66 | +0.60 | — 6.06 | S. M. Ackley. | C. and G. S. Rep., 1881, App. 9. |
| Vera Cruz, Mexico (S. V. S.). | 19 12 | 96 08 | 1880.11 | — 7.44 | ------ | — 6.21 | S. M. Ackley. | C. and G. S. Rep., 1881, App. 9. |
| City of Mexico (S. V. S.). | 19 26 | 99 07 | 1884.29 | — 8.23 | ------ | — 7.77 | G. Davidson. | MS. in C. and G. S. Office. |
| Campeche, Yucatan. | 19 50 | 90 33 | 1880.19 | — 6.61 | +0.46 | — 6.15 | S. M. Ackley. | C. and G. S. Rep., 1881, App. 9. |
| Cozumel Island. | 20 33 | 86 57 | 1879.32 | — 5.20 | +0.56 | — 4.64 | S. M. Ackley. | C. and G. S. Rep., 1881, App. 9. |
| Mugeres Island. | 21 15 | 86 46 | 1879.32 | — 4.82 | +0.56 | — 4.26 | S. M. Ackley. | C. and G. S. Rep., 1881, App. 9. |
| Progresso, Yucatan. | 21 17 | 89 40 | 1880.20 | — 6.43 | +0.50 | — 5.93 | S. M. Ackley. | C. and G. S. Rep., 1881, App. 9. |
| Cape San Antonio, Cuba. | 21 56 | 84 55 | 1879.27 | — 4.73 | +0.56 | — 4.17 | S. M. Ackley. | C. and G. S. Rep., 1881, App. 9. |
| Arenas Cay, off Yucatan. | 22 07 | 91 25 | 1880.08 | — 6.55 | +0.50 | — 6.05 | S. M. Ackley. | C. and G. S. Rep., 1881, App. 9. |
| Perez Island, off Yucatan. | 22 24 | 89 42 | 1880.06 | — 6.32 | +0.50 | — 5.82 | S. M. Ackley. | C. and G. S. Rep., 1881, App. 9. |
| Bahia Honda, Cuba. | 22 58 | 83 12 | 1879.24 | — 4.06 | +0.61 | — 3.45 | S. M. Ackley. | C. and G. S. Rep., 1881, App. 9. |
| Matanzas, Cuba. | 23 03 | 81 37 | 1879.18 | — 3.44 | +0.61 | — 2.83 | S. M. Ackley. | C. and G. S. Rep., 1881, App. 9. |
| Havana, Colegio de Belen (S. V. S.). | 23 08 | 82 22 | 1879.20 | — 3.90 | ------ | — 3.02 | S. M. Ackley. | C. and G. S. Rep., 1881, App. 9. |
| Water Cay, Salt Key Banks. | 23 59 | 80 21 | 1879.16 | — 2.84 | +0.64 | — 2.20 | S. M. Ackley. | C. and G. S. Rep., 1881, App. 9. |
| Nassau, New Providence. | 25 06 | 77 20 | 1879.14 | — 1.43 | +0.66 | — 0.77 | S. M. Ackley. | C. and G. S. Rep., 1881, App. 9. |
| South Bemini, Bahama Islands. | 25 42 | 79 18 | 1879.15 | — 2.46 | +0.66 | — 1.80 | S. M. Ackley. | C. and G. S. Rep., 1881, App. 9. |

Group 2.

| | | | | | | | | |
|---|---|---|---|---|---|---|---|---|
| Guatemala, Colegio Seminario. | 14 35 | 90 30 | 1858.50 | — 7.25 | +1.35 | — 5.90 | Padres de la Co. de J. | Publication of the College. |
| Dominica. | 15 18 | 64 33 | 1826.5 | — 1.25 | +2.90 | + 1.65 | —— Zahrtmann. | Phil. Trans. Roy. Soc., 1875. |
| Beacon Key. | 15 48 | 79 51 | 1844.5 | — 6.00 | +2.10 | — 3.90 | —— Lawrence. | Phil. Trans. Roy. Soc. 1875. |
| South Key, Honduras Bay. | 16 03 | 86 59 | 1844.5 | —7.75 | +1.81 | — 5.94 | —— Lawrence. | Phil. Trans. Roy. Soc., 1875. |

*Table of Observed Magnetic Declinations and Values reduced to the Year* 1890—Continued.

BERMUDAS AND WEST INDIA ISLANDS, ETC.—Continued.

| Name of station. | $\varphi$ | $\lambda$ | $t$ | D | $\Delta$D | $D_{1890.0}$ | Observer. | Reference. |
|---|---|---|---|---|---|---|---|---|
| | ° ′ | ° ′ | | ° | ° | ° | | |
| The Hobbies. | 16 04 | 83 11 | 1833.5 | —6.00 | +2.60 | — 3.40 | —— Barnett. | Phil. Trans. Roy. Soc., 1875. |
| Antigua. | 17 08 | 61 52 | 1848.5 | —0.77 | +2.04 | + 1.27 | —— Barnett. | Phil. Trans. Roy. Soc., 1875. |
| Saint Croix. | 17 45 | 64 44 | 1853.5 | —1.53 | +1.60 | + 0.07 | —— Lang. | Phil. Trans. Roy. Soc., 1875. |
| Point Morant, Jamaica. | 17 55 | 76 16 | 1831.5 | —5.22 | +2.53 | — 2.69 | —— Austin. | Phil. Trans. Roy. Soc., 1875. |
| Kingston, Port Royal (S. V. S.). | 17 56 | 76 51 | 1880.5 | —3.10 | ------ | — 2.50 | ---------- | Brit. Admiralty Chart. |
| Anguilla Island. | 18 14 | 63 09 | 1846.5 | —0.93 | +1.95 | + 1.02 | —— Barnett. | Phil. Trans. Roy. Soc., 1875. |
| Saint Thomas. | 18 20 | 64 55 | 1865.87 | —0.66 | +1.03 | + 0.37 | W. Harkness. | Cruise of the Monadnock, Smith'n Cont'st o Kn., 1873. |
| Cocolopam, Orizaba. | 18 53 | 97 04 | 1856.65 | —8.47 | +1.89 | — 6.58 | A. Sonntag. | Smith'n Cont's to Kn., 1860. |
| Potrero, Mexico. | 18 56 | 96 48 | 1856.63 | —8.65 | +2.04 | — 6.61 | A. Sonntag. | Smith'n Cont's to Kn., 1860. |
| San Andres, Chalchecomula. | 18 59 | 97 15 | 1856.71 | —8.22 | +1.89 | — 6.33 | A. Sonntag. | Smith'n Cont's to Kn., 1860. |
| Tlamacas. | 19 03 | 98 39 | 1857.07 | —8.47 | +0.80 | — 7.67 | A. Sonntag. | Smith'n Cont's to Kn., 1860. |
| Mirador, Mexico. | 19 13 | 96 37 | 1856.77 | —8.03 | +2.04 | — 5.99 | A. Sonntag. | Smith'n Cont's to Kn., 1860. |
| Chalco. | 19 18 | 98 51 | 1857.02 | —9.05 | +0.80 | — 8.25 | A. Sonntag. | Smith'n Cont's to Kn., 1860. |
| Lerma, Yucatan. | 19 49 | 90 34 | 1847.5 | —8.03 | +1.88 | — 6.15 | —— Barnett. | Phil. Trans. Roy. Soc., 1875. |
| Cumberland Harbor, Cuba. | 19 55 | 75 15 | 1837.5 | —3.52 | +2.29 | — 1.23 | —— Milne. | Phil. Trans. Roy. Soc., 1875. |
| Saint Iago, Cuba. | 20 00 | 76 03 | 1837.5 | —3.65 | +2.29 | — 1.36 | —— Milne. | Phil. Trans. Roy. Soc., 1875. |
| Cape Maize, Cuba. | 20 14 | 74 12 | 1831.5 | —2.45 | +2.53 | + 0.08 | —— Austin. | Phil. Trans. Roy. Soc., 1875. |
| Baraçoa, Cuba. | 20 22 | 74 34 | 1831.5 | —3.28 | +2.53 | — 0.75 | Austin and Foster. | Phil. Trans. Roy. Soc., 1875. |
| San Domingo. | 21 33 | 75 45 | 1837.5 | —4.03 | +2.29 | — 1.74 | —— Milne. | Phil. Trans. Roy. Soc., 1875. |
| Crooked Island, Bahama Islands. | 22 07 | 74 24 | 1835.5 | —5.22(?) | ------ | ------ | —— Foster. | Phil. Trans. Roy. Soc., 1875. |
| Crooked Island, Bahama Islands. | 22 47 | 74 21 | 1837.5 | —2.57 | ------ | ------ | —— Milne. | Phil. Trans. Roy. Soc., 1875. |
| Havana, Colegio de Belen (S. V. S.). | 23 08 | 82 22 | 1886.97 | —3.58 | ------ | — 3.02 | B. Viñes. | Observ. Mag. y Met., etc., Habana, 1888. |

***Table of Observed Magnetic Declinations and Values reduced to the Year* 1890—Continued.**

BERMUDAS AND WEST INDIA ISLANDS, ETC.—Continued.

| Name of station. | φ | λ | t | D | ΔD | $D_{1890.0}$ | Observer. | Reference. |
|---|---|---|---|---|---|---|---|---|
| | ° ′ | ° ′ | | ° | ° | ° | | |
| Watling Island.* | 23 57 | 74 25 | 1831.5 | — 2.52 | ------ | ------ | —— Smith. | Phil. Trans. Roy. Soc., 1875. |
| St. George, Button Island, Bermudas.† (S. V. S.). | 32 23 | 64 43 | 1873.28 | + 7.25 | ------ | + 8.43 | Officers of the "Challenger." | Results of Voyage of "Challenger," Vol. II, London, 1882. |

MEXICO, WEST OF LONGITUDE 100° W.

Group 1.

| | | | | | | | | |
|---|---|---|---|---|---|---|---|---|
| Isla Grande, Mex. | 17 40 | 101 41 | 1880.91 | — 7.44 | +0.43 | — 7.01 | H. E. Nichols. | C. and G. S. Rep., 1881, App. 9. |
| Clarion Island. | 18 20 | 114 42 | 1880.77 | — 8.38 | +0.19 | — 8.19 | H. E. Nichols. | C. and G. S. Rep., 1881, App. 9. |
| Socorro Island. | 18 43 | 110 54 | 1880.78 | — 8.83 | +0.19 | — 8.64 | H. E. Nichols. | C. and G. S. Rep., 1881, App. 9. |
| Manzanilla, Mex. (S. V. S.). | 19 03 | 104 20 | 1880.92 | — 8.08 | +0.43 | — 7.65 | H. E. Nichols. | C. and G. S. Rep., 1881, App. 9. |
| San Blas, Mex. (S. V. S.). | 21 32 | 105 18 | 1880.93 | — 9.30 | ------ | — 8.50 | H. E. Nichols. | C. and G. S. Rep., 1881, App. 9. |
| Cape San Lucas, Lower Cal. (S.V.S.). | 22 54 | 109 55 | 1881.14 | — 9.44 | ------ | — 9.37 | H. E. Nichols. | C. and G. S. Rep., 1881, App. 9. |
| San José del Cabo, Lower Cal. | 23 04 | 109 41 | 1881.13 | — 9.73 | +0.19 | — 9.54 | H. E. Nichols. | C. and G. S. Rep., 1881, App. 9. |
| Mazatlan, Mex. | 23 12 | 106 27 | 1881.12 | — 9.66 | +0.19 | — 9.47 | H. E. Nichols. | C. and G. S. Rep., 1881, App. 9. |
| La Paz, Lower Cal. | 24 10 | 110 21 | 1881.10 | —10.15 | +0.17 | — 9.98 | H. E. Nichols. | C. and G. S. Rep., 1881, App. 9. |
| Pichilingue Bay Lower Cal. | 24 16 | 110 20 | 1881.10 | — 9.75 | +0.15 | — 9.60 | H. E. Nichols. | C. and G. S. Rep., 1881, App. 9. |
| Magdalena Bay, Lower Cal. (S.V.S.). | 24 38 | 112 09 | 1881.15 | —10.48 | ------ | —10.32 | H. E. Nichols. | C. and G. S. Rep., 1881, App. 9. |
| Isle San Josef, Lower Cal. | 24 55 | 110 37 | 1881.09 | — 9.79 | +0.15 | — 9.64 | H. E. Nichols. | C. and G. S. Rep., 1881, App. 9. |
| Point San Ignacio, Mex. | 25 36 | 109 17 | 1880.97 | —10.26 | +0.20 | —10.06 | H. E. Nichols. | C. and G. S. Rep., 1881, App. 9. |
| Loreto, Lower Cal. | 26 01 | 111 20 | 1881.08 | —10.27 | +0.20 | —10.07 | H. E. Nichols. | C. and G. S. Rep., 1881, App. 9. |
| Pequeña Bay, Lower Cal. | 26 16 | 112 28 | 1881.16 | —10.52 | +0.20 | —10.32 | H. E. Nichols. | C. and G. S. Rep., 1881, App. 9. |
| Santa Barbara Bay, Mex. | 26 42 | 109 38 | 1880.98 | —10.81 | +0.20 | —10.61 | H. E. Nichols. | C. and G. S. Rep., 1881, App. 9. |
| Point Albreojos, Lower Cal. | 26 47 | 113 31 | 1881.17 | —11.26 | +0.20 | —11.06 | H. E. Nichols. | C. and G. S. Rep., 1881, App. 9. |

* Supposed landfall of Columbus, 1492.

† A station in the Bermuda Islands supposed "normal."

*Table of Observed Magnetic Declinations and Values reduced to the Year* 1890—Continued.

MEXICO, WEST OF LONGITUDE 100° W.—Continued.

| Name of station. | φ | λ | t | D | ΔD | $D_{1890.0}$ | Observer. | Reference. |
|---|---|---|---|---|---|---|---|---|
| | ° ′ | ° ′ | | ° | ° | ° | | |
| Muleje, Lower Cal. | 26 54 | 111 58 | 1881.07 | —11.22 | +0.20 | —11.02 | H. E. Nichols. | C. and G. S. Rep., 1881, App. 9. |
| Ascension Island, Lower Cal. | 27 06 | 114 18 | 1881.18 | —11.38 | +0.20 | —11.18 | H. E. Nichols. | C. and G. S. Rep., 1881, App. 9. |
| Santa Maria Cove, Lower Cal. | 27 25 | 112 20 | 1881.06 | —11.10 | +0.25 | —10.85 | H. E. Nichols. | C and G. S. Rep., 1881, App. 9. |
| Guaymas, Mex. | 27 55 | 110 53 | 1880.99 | —11.80 | +0.25 | —11.55 | H. E. Nichols. | C. and G. S. Rep., 1881, App. 9. |
| Cerros Island, Lower Cal. (S. V. S.). | 28 03 | 115 11 | 1881.19 | —11.98 | ------ | —11.58 | H. E. Nichols. | C. and G. S. Rep., 1881, App. 9. |
| Lagoon Head, Lower Cal. | 28 14 | 114 06 | 1873.12 | —11.85 | +0.39 | —11.46 | W. Eimbeck (G. Davidson) | C. and G S. Rep., 1881, App. 9. |
| Santa Teresa Bay, Mex. | 28 25 | 112 52 | 1881.05 | —11.70 | +0.25 | —11.45 | H. E. Nichols. | C. and G. S. Rep., 1881, App. 9. |
| Guadalupe Island, Lower Cal. | 28 55 | 118 15 | 1881.21 | —12.91 | +0.25 | —12.66 | H. E. Nichols. | C. and G. S. Rep., 1881, App. 9. |
| Tiburon Island, Mex. | 29 12 | 112 27 | 1881.00 | —11.99 | +0.25 | —11.74 | H. E. Nichols. | C. and G. S. Rep., 1881, App. 9. |
| San Geronimo, Lower Cal. | 29 47 | 115 48 | 1881.23 | —12.70 | +0.14 | —12.56 | H. E. Nichols. | C. and G. S. Rep., 1881, App. 9. |
| San Luis Gonzales, Lower Cal. | 29 51 | 114 25 | 1881.04 | —12.46 | +0.14 | —12.32 | H. E. Nichols. | C. and G. S. Rep., 1881, App. 9. |
| San Martin Island, Lower Cal. | 30 29 | 116 07 | 1881.24 | —12.93 | +0.14 | —12.79 | H. E. Nichols. | C. and G. S. Rep., 1881, App. 9. |
| Point San Felipe, Lower Cal. | 31 02 | 114 50 | 1881.04 | —12.95 | +0.14 | —12.81 | H. E. Nichols. | C. and G. S. Rep., 1881, App. 9. |
| Rocky Point, Mex. | 31 17 | 113 33 | 1881.01 | —13.45 | +0.14 | —13.31 | H. E. Nichols. | C. and G. S. Rep., 1881, App. 9. |
| Philipps Point, mouth of river. | 31 46 | 114 43 | 1881.02 | —13.10 | +0.03 | —13.07 | H. E. Nichols. | C. and G. S. Rep., 1881, App. 9. |
| Todos Santos, Lower Cal. | 31 51 | 116 38 | 1881.26 | —12.01 | +0.03 | —11.98 | H. E. Nichols. | C. and G. S. Rep., 1881, App. 9. |

Group 2.

| | | | | | | | | |
|---|---|---|---|---|---|---|---|---|
| Near Roca Partida. | 19 06 | 112 00 | 1874.24 | — 8.35 | +0.25 | — 8.10 | C. Seymour and E. J. Young. | Cruise of the Narragansett (G. Dewey). |
| Near Benedicte Island. | 19 15 | 110 49 | 1874.24 | — 9.10 | +0.25 | — 8.85 | C. Seymour and E. J. Young. | Cruise of the Narragansett (G. Dewey). |
| Tabo Bay. | 20 24 | 105 40 | 1874.18 | — 8.90 | +0.68 | — 8.22 | C. Seymour and E. J. Young. | Cruise of the Narragansett (G. Dewey). |
| Peñas Anchorage. | 20 36 | 105 16 | 1874.17 | — 8.83 | +0.68 | — 8.15 | C. Seymour and E. J. Young. | Cruise of the Narragansett (G. Dewey). |
| Punta Mita. | 20 46 | 105 32 | 1875.34 | — 9.06 | +0.64 | — 8.42 | J. E. Craig and C. Seymour. | Cruise of the Narragansett (G. Dewey). |

*Table of Observed Magnetic Declinations and Values reduced to the Year* 1890—Continued.

MEXICO, WEST OF LONGITUDE 100° W—Continued.

| Name of station. | φ | λ | t | D | ΔD | $D_{1890.0}$ | Observer. | Reference. |
|---|---|---|---|---|---|---|---|---|
| | ° ′ | ° ′ | | ° | ° | ° | | |
| Isabel Island. | 21 56 | 105 41 | 1874.14 | − 9.40 | +0.68 | − 8.72 | C. Seymour and E. J. Young. | Cruise of the Narragansett (G. Dewey). |
| Todos Santos. | 23 24 | 110 14 | 1875.04 | − 9.23 | +0.21 | − 9.02 | G. C. Reiter. | Cruise of the Narragansett (G. Dewey). |
| Observation Point. | 23 33 | 109 29 | 1875.05 | − 9.96 | +0.21 | − 9.75 | G. C. Reiter. | Cruise of the Narragansett (G. Dewey). |
| Punta Arena. | 24 04 | 109 50 | 1875.06 | −10.10 | +0.21 | − 9.89 | G. C. Reiter. | Cruise of the Narragansett (G. Dewey). |
| El Conejo Point. | 24 21 | 111 30 | 1875.04 | −10.27* | +0.21 | −10.06 | G. C. Reiter and J. E. Craig. | Cruise of the Narragansett (G. Dewey). |
| Lupono Point, Espiritu Santo Island. | 24 24 | 110 21 | 1875.06 | − 9.43 | +0.21 | − 9.22 | G. C. Reiter and J. E. Craig. | Cruise of the Narragansett (G. Dewey). |
| Santa Maria Bay. | 24 45 | 112 16 | 1875.03 | −10.76 | +0.21 | −10.55 | J. E. Craig. | Cruise of the Narragansett (G. Dewey). |
| San Everisto, San Josef's Channel. | 24 52 | 110 42 | 1873.84 | − 8.88* | +0.21 | − 8.67 | C. Seymour and E. J. Young. | Cruise of the Narragansett (G. Dewey). |
| San Joseph Island. | 25 02 | 110 43 | 1875.10 | −10.08 | +0.21 | − 9.87 | J. E. Craig and G. C. Reiter. | Cruise of the Narragansett (G. Dewey). |
| Playa Colorado. | 25 12 | 108 24 | 1874.08 | −10.68 | +0.21 | −10.47 | H. P. Tuttle and E. J. Young. | Cruise of the Narragansett (G. Dewey). |
| Boca Soledad. | 25 16 | 112 08 | 1875.02 | −11.13 | +0.21 | −10.92 | G. C. Reiter. | Cruise of the Narragansett (G. Dewey). |
| Navachista. | 25 23 | 108 49 | 1874.08 | −10.34 | +0.21 | −10.13 | H. P. Tuttle and E. J. Young. | Cruise of the Narragansett (G. Dewey). |
| San Marcial Point. | 25 29 | 111 02 | 1875.10 | −10.18 | +0.21 | − 9.97 | G. C. Reiter. | Cruise of the Narragansett (G. Dewey). |
| Topolobampo. | 25 34 | 109 10 | 1874.08 | −10.68 | +0.21 | −10.47 | H. P. Tuttle and E. J. Young. | Cruise of the Narragansett (G. Dewey). |
| Carmen Island, Salinas Bay. | 26 00 | 111 07 | 1873.86 | −11.46* | +0.28 | −11.18 | H. P. Tuttle and E. J. Young. | Cruise of the Narragansett (G. Dewey). |
| San Juanico Point. | 26 03 | 112 40 | 1875.02 | −10.82 | +0.28 | −10.54 | G. C. Reiter. | Cruise of the Narragansett (G. Dewey). |
| Agiabampo. | 26 17 | 109 18 | 1874.07 | −12.02 | +0.28 | −11.74 | H. P. Tuttle and E. J. Young. | Cruise of the Narragansett (G. Dewey). |
| San Domingo Point. | 26 19 | 112 42 | 1875.01 | −10.36 | +0.28 | −10.08 | J. E. Craig and C. Seymour. | Cruise of the Narragansett (G. Dewey). |
| Pulpito Point. | 26 31 | 111 27 | 1875.11 | −11.56 | +0.28 | −11.28 | G. C. Reiter. | Cruise of the Narragansett (G. Dewey). |
| Abreojos Point. | 26 42 | 113 14 | 1873.51 | −11.96 | +0.28 | −11.68 | Z. L. Tanner and E. J. Young. | Cruise of the Narragansett (G. Dewey). |
| San Ignacio Point. | 26 46 | 113 16 | 1875.01 | −12.13 | +0.28 | −11.85 | J. E. Craig and C. Seymour. | Cruise of the Narragansett (G. Dewey). |
| Ciaris Island. | 26 59 | 109 57 | 1874.06 | −11.27 | +0.28 | −10.99 | H. P. Tuttle and E. J. Young. | Cruise of the Narragansett (G. Dewey). |

* Mean of two determinations.

*Table of Observed Magnetic Declinations and Values reduced to the Year* 1890—Continued.

MEXICO, WEST OF LONGITUDE 100° W—Continued.

| Name of station. | φ | λ | t | D | ΔD | $D_{1890.0}$ | Observer. | Reference. |
|---|---|---|---|---|---|---|---|---|
| | ° ′ | ° ′ | | ° | ° | ° | | |
| San Marcos Island, | 27 10 | 112 06 | 1875.12 | −10.63* | +0.28 | −10.35 | J. E. Craig and G. C. Reiter. | Cruise of the Narragansett (G. Dewey). |
| Off Lobos Island. | 27 20 | 110 38 | 1874.06 | −11.51 | +0.28 | −11.23 | H. P. Tuttle and E. J. Young. | Cruise of the Narragansett (G. Dewey). |
| San Bartolome Bay. | 27 39 | 114 52 | 1888.40 | −11.50 | +0.05 | −11.45 | C. F. Pond (F. A. Cook). | U. S. S. Ranger; Hyd. Not. No. 41, 1888. |
| San Carlos Point. | 28 00 | 112 48 | 1875.13 | −11.76 | +0.37 | −11.39 | J. E. Craig and G. C. Reiter. | Cruise of the Narragansett (G. Dewey). |
| San Pedro Anchorage. | 28 03 | 111 16 | 1874.00 | −12.41 | +0.38 | −12.03 | H. P. Tuttle and E. J. Young. | Cruise of the Narragansett (G. Dewey). |
| Cerros Island, S. E. Bay; Sebastian Vizcaino Bay (S.V. S.). | 28 03 | 115 13 | 1888.24 | −11.68 | | | C. F. Pond (F. A. Cook). | U. S. S. Ranger; Hyd. Not. No. 41, 1888. |
| Cerros Island, Morro Rodondo Bay; Sebastian Vizcaino Bay. | 28 04 | 115 12 | 1888.41 | −11.64 | ----- | −11.58 | C. F. Pond (F. A. Cook). | U. S. S. Ranger; Hyd. Not. No. 41, 1888. |
| Lagoon Head, Sebastian Vizcaino Bay. | 28 15 | 114 06 | 1888.05 | −11.52 | +0.06 | −11.46 | C. F. Pond (F. A. Cook). | U. S. S. Ranger; Hyd. Not. No. 41, 1888. |
| San Beneto Peak. | 28 18 | 115 36 | 1874.98 | −11.30 | +0.37 | −10.93 | J. E. Craig and C. Seymour. | Cruise of the Narragansett (G. Dewey). |
| Rosalia Bay, Sebastian Vizcaino Bay. | 28 40 | 114 14 | 1888.23 | 9.44 | +0.05 | −9.39 | C. F. Pond (F. A. Cook). | U. S. S. Ranger; Hyd. Not. No. 41, 1888. |
| Kino Bay. | 28 46 | 111 59 | 1873.99 | −12.55 | +0.38 | −12.17 | H. P. Tuttle and E. J. Young. | Cruise of the Narragansett (G. Dewey). |
| Tiburon Island. | 28 46 | 112 22 | 1873.99 | −12.47 | +0.38 | −12.09 | H. P. Tuttle and E. J. Young. | Cruise of the Narragansett (G. Dewey). |
| Las Animas. | 28 48 | 113 13 | 1873.92 | −12.59 | +0.38 | −12.21 | H. P. Tuttle and E. J. Young. | Cruise of the Narragansett (G. Dewey). |
| Raza Island. | 28 49 | 113 00 | 1875.21 | −12.50 | +0.37 | −12.13 | G. C. Reiter and J. E. Craig. | Cruise of the Narragansett (G. Dewey). |
| La Playa, Maria Bay. | 28 55 | 114 32 | 1874.97 | −11.36 | +0.37 | −10.99 | J. E. Craig and C. Seymour. | Cruise of the Narragansett (G. Dewey). |
| Angeles Bay. | 28 57 | 113 35 | 1873.92 | −12.69 | +0.38 | −12.31 | H. P. Tuttle and E. J. Young. | Cruise of the Narragansett (G. Dewey). |
| Angel de la Guardia Island. | 29 00 | 113 12 | 1875.14 | −12.48 | +0.37 | −12.11 | J. E. Craig and G. C. Reiter. | Cruise of the Narragansett (G. Dewey). |
| Remedios Bay. | 29 14 | 113 40 | 1873.93 | −12.56 | +0.18 | −12.38 | H. P. Tuttle and E. J. Young. | Cruise of the Narragansett (G. Dewey) |
| Patos Island. | 29 16 | 112 29 | 1873.98 | −13.00 | +0.18 | −12.82 | H. P. Tuttle and E. J. Young. | Cruise of the Narragansett (G. Dewey). |

*Mean of two determinations.

*Table of Observed Magnetic Declinations and Values reduced to the Year* 1890—Continued.

MEXICO, WEST OF LONGITUDE 100° W.—Continued.

| Name of station. | φ | λ | t | D | ΔD | $D_{1890.0}$ | Observer. | Reference. |
|---|---|---|---|---|---|---|---|---|
| | ° ′ | ° ′ | | ° | ° | ° | | |
| Angel de la Guardia Island. | 29 32 | 113 30 | 1875.15 | −12.53 | +0.18 | −12.35 | G. C. Reiter. | Cruise of the Narragansett (G. Dewey). |
| Mejia Island. | 29 33 | 113 35 | 1875.15 | −12.08 | +0.18 | −11.90 | G. C. Reiter and C. Seymour. | Cruise of the Narragansett (G. Dewey). |
| Presidio del Norte. | 29 34 | 104 25 | 1852.5 | −10.27 | +0.45 | − 9.82 | W. H. Emory. | Bd. Sur., Am. Acad. Sc., Vol. VI, 1856. |
| San Geronimo Island. | 29 47 | 115 48 | 1888.44 | −12.39 | +0.02 | −12.37 | C. F. Pond (F. A. Cook). | U. S. S. Ranger; Hyd. Not. No. 41. 1888. |
| Libertad Bay. | 29 54 | 112 45 | 1873.98 | −12.93 | +0.18 | −12.75 | H. P. Tuttle and E. J. Young. | Cruise of the Narragansett (G. Dewey). |
| San Luis Island. | 29 58 | 114 26 | 1873.96 | −12.50 | +0.18 | −12.32 | H. P. Tuttle and E. J. Young. | Cruise of the Narragansett (G. Dewey). |
| Sepoca Bay. | 30 16 | 112 53 | 1875.20 | −12.28 | +0.18 | −12.10 | G. C. Reiter. | Cruise of the Narragansett (G. Dewey). |
| San Quentin. | 30 22 | 115 59 | 1873.67 | −13.00 | +0.18 | −12.82 | Z. L. Tanner and E. J. Young. | Cruise of the Narragansett (G. Dewey). |
| San Firmin. | 30 25 | 114 40 | 1873.96 | −11.23 | +0.18 | −11.05 | H. P. Tuttle and E. J. Young. | Cruise of the Narragansett (G. Dewey). |
| San Martin Island. | 30 29 | 116 06 | 1888.44 | −12.39 | +0.02 | −12.37 | C. F. Pond (F. A. Cook). | U. S. S. Ranger; Hyd. Not. No. 41, 1888. |
| George's Island. | 31 01 | 113 16 | 1875.20 | −12.72 | +0.18 | −12.54 | G. C. Reiter and C. Seymour. | Cruise of the Narragansett (G. Dewey). |
| Espia. | 31 21 | 107 56 | 1855.2 | −12.08 | +0.50 | −11.58 | W. H. Emory. | Bd. Sur., Am. Acad. Sc., Vol. VI, 1856. |
| Adair Bay. | 31 30 | 114 08 | 1873.97 | −13.33 | +0.18 | −13.15 | H. P. Tuttle and E. J. Young. | Cruise of the Narragansett (G. Dewey). |
| Mouth of Rio Colorado. | 31 51 | 114 45 | 1841.5 | −11.25 | −0.88 | −12.13 | Duflot de Mofras. | Expl. of Oregon, 1844. |
| Ensinada Anchorage, Bay of Todos Santos. | 31 51 | 116 38 | 1873.65 | −12.69 | −0.02 | −12.71 | Z. L. Tanner and E. J. Young. | Cruise of the Narragansett (G. Dewey). |

BRITISH POSSESSIONS AND DOMINION OF CANADA, TO LONGITUDE 75° WEST. Group 1.

| | | | | | | | | |
|---|---|---|---|---|---|---|---|---|
| Yarmouth, N. S. | 43 50 | 66 07 | 1881.85 | +17.82 | +0.14 | +17.96 | S. W. Very. | C. and G. S. Rep., 1881, App. 9. |
| Weymouth, N. S. | 44 24 | 66 00 | 1881.86 | +18.72 | +0.14 | +18.86 | S. W. Very. | C. and G. S. Rep., 1881, App. 9. |
| Halifax, N. S. (S. V. S.). | 44 40 | 63 35 | 1879.69 | +20.72 | ------ | +20.70 | J. B. Baylor. | C. and G. S. Rep., 1881, App. 9. |
| Annapolis, N. S. | 44 44 | 65 31 | 1881.87 | +19.45 | +0.12 | +19.57 | S. W. Very. | C. and G. S. Rep., 1881, App. 9. |

*Table of Observed Magnetic Declinations and Values reduced to the Year* 1890—Continued.

BRITISH POSSESSIONS AND DOMINION OF CANADA, TO LONGITUDE 75° WEST—Continued.

| Name of station. | φ | λ | t | D | ΔD | $D_{1890.0}$ | Observer. | Reference. |
|---|---|---|---|---|---|---|---|---|
| | ° ′ | ° ′ | | ° | ° | ° | | |
| Windsor, N. S. | 45 00 | 64 08 | 1881.89 | +20.70 | +0.09 | +20.79 | S. W. Very. | C. and G. S. Rep., 1881, App. 9. |
| Chamcook, N. B. | 45 08 | 67 05 | 1859.79 | +17.60 | +1.14 | +18.74 | G. W. Dean (A. D. Bache). | C. and G. S. Rep., 1881, App. 9. |
| Arichat, Isle Madame | 45 30 | 61 01 | 1881.82 | +23.43 | −0.02 | +23.41 | S. W. Very. | C. and G. S. Rep., 1881, App. 9. |
| Montreal (S. V. S.). | 45 30 | 73 35 | 1879.73 | +13.68 | ------ | +14.44 | J. B. Baylor. | C. and G. S. Rep., 1881, App. 9. |
| Sidney, Cape Breton. | 46 09 | 60 12 | 1881.81 | +25.20 | −0.07 | +25.13 | S. W. Very. | C. and G. S. Rep., 1881, App. 9. |
| Quebec (S. V. S.). | 46 48 | 71 14 | 1879.72 | +17.23 | ------ | +17.51 | J. B. Baylor. | C. and G. S. Rep., 1881, App. 9. |
| St. John's, N. F. (S. V. S.). | 47 34 | 52 42 | 1881.74 | +30.62 | ------ | +30.51 | S. W. Very. | C. and G. S. Rep., 1881, App. 9. |
| Twillingate, N. F. | 49 39 | 54 46 | 1881.53 | +33.99 | −0.25 | +33.74 | S. W. Very. | C. and G. S. Rep., 1881, App. 9. |

Group 2.

| | | | | | | | | |
|---|---|---|---|---|---|---|---|---|
| Cape Sable. | 43 20 | 65 30 | 1828.5 | +12.00 | +3.05 | +15.05 | (Carte du Depot). | Becquerel's Tr. du Mag., 1846. |
| Negro Harbor. | 43 33 | 65 25 | 1859.5 | +17.33 | +0.97 | +18.30 | P. F. Shortland. | MS. in C. and G. S. Office. |
| Chester Harbor. | 44 36 | 64 10 | 1775.5 | +13.50 | +6.7 | +20.2 | J. F. W. Des Barres. | Des Barres' Atl. Nep., 1781. |
| Shelburn Light. | 43 37 | 65 16 | 1859.5 | +17.78 | +0.97 | +18.75 | P. F. Shortland. | MS. in C. and G. S. Office. |
| Lawrencetown. | 44 42 | 63 22 | 1881.5 | +21.25 | +0.10 | +21.35 | W. B. Dawson. | MS. in C. and G. S. Office. |
| Waverly. | 44 47 | 63 36 | 1881.8 | +21.02 | +0.09 | +21.11 | W. B. Dawson. | MS. in C. and G. S. Office. |
| Barnhart's Island. | 45 00 | 74 48 | 1871.5 | +10.37 | +1.35 | +11.72 | A. C. Lamson. | P. P., U. S. Eng's, No. 24, 1882. |
| Cornwall Canal. | 45 00 | 74 55 | 1869.5 | + 9.50 | +1.57 | +11.07 | ---------- | P. P., U. S. Eng's, No. 24, 1882. |
| Stanstead. | 45 02 | 72 10 | 1845.5 | +11.55 | +3.59 | +15.14 | (Bound. Sur.). | Phil. Trans. Roy. Soc., 1872. |
| Black Rock, near Light. | 45 10 | 64 46 | 1856.5 | +18.73 | +1.13 | +19.86 | P. F. Shortland. | MS. in C. and G. S. Office. |
| New Brunswick or Mispeck. | 45 12 | 66 00 | 1859.5 | +18.27 | +1.03 | +19.30 | P. F. Shortland. | MS. in C. and G. S. Office. |
| Saint John, N. B. | 45 14 | 66 03 | 1866.27 | +19.38 | +0.59 | +19.97 | J. H. Orlebar. | MS. of Sir F. J. Evans, 1867. |
| Prospect Hill and Connecticut River. | 45 15 | 71 14 | 1845.5 | +12.14 | +3.33 | +15.47 | (Bound. Sur.). | Phil. Trans. Roy. Soc., 1872. |

*Table of Observed Magnetic Declinations and Values reduced to the Year* 1890—Continued.

BRITISH POSSESSIONS AND DOMINION OF CANADA, TO LONGITUDE 75° WEST—Continued.

| Name of station. | $\varphi$ | $\lambda$ | $t$ | D | $\Delta$D | $D_{1890.0}$ | Observer. | Reference. |
|---|---|---|---|---|---|---|---|---|
| | ° ′ | ° ′ | | ° | ° | ° | | |
| Highland Boundary. | 45 18 | 71 05 | 1845.5 | +13.33 | +3.33 | +16.66 | (Bound. Sur.). | Phil. Trans. Roy. Soc., 1872. |
| Saint John's, near Montreal. | 45 19 | 73 00 | 1842.5 | +11.37 | +4.71 | +16.08 | J. H. Lefroy. | Phil. Trans. Roy. Soc., 1872. |
| Arnold's River. | 45 20 | 70 55 | 1845.5 | +13.50 | +3.33 | +16.83 | (Bound. Sur.). | Phil. Trans. Roy. Soc., 1872. |
| Dead River. | 45 26 | 70 48 | 1845.5 | +13.17 | +3.22 | +16.39 | (Bound. Sur.). | Phil. Trans. Roy. Soc., 1872. |
| Highland Boundary. | 45 31 | 70 43 | 1845.5 | +13.42 | +3.22 | +16.64 | (Bound. Sur.). | Phil. Trans. Roy. Soc., 1872. |
| Isle Madame. | 45 35 | 60 56 | 1848.5 | +22.50 | +1.65 | +24.15 | G. W. Keely. | Phil. Trans. Roy. Soc., 1872. |
| River La Graise. | 45 36 | 74 22 | 1843.5 | + 8.43 | +4.59 | +13.02 | J. H. Lefroy. | Phil. Trans. Roy. Soc., 1872. |
| Carillon. | 45 36 | 74 32 | 1843.5 | + 8.68 | +4.59 | +13.27 | J. H. Lefroy. | Phil. Trans. Roy. Soc., 1872. |
| Highland Boundary. | 45 37 | 70 37 | 1845.5 | +13.62 | +3.22 | +16.84 | (Bound. Sur.). | Phil. Trans. Roy. Soc., 1872. |
| Point aux Chênes. | 45 37 | 74 55 | 1843.5 | + 7.47 | +4.59 | +12.06 | J. H. Lefroy. | Phil. Trans. Roy. Soc., 1872. |
| Merigomish Harbor. | 45 38 | 62 27 | 1842.5 | +20.25 | +2.18 | +22.43 | H. W. Bayfield. | Phil. Trans. Roy. Soc., 1872. |
| Richmond Junction. | 45 41 | 72 03 | 1876.63 | +16.99 | +0.76 | +17.75 | F. E. Hilgard. | Nat. Acad. Sc. |
| Pictou Harbor. | 45 42 | 62 40 | 1841.5 | +20.32 | +2.26 | +22.58 | H. W. Bayfield. | Phil. Trans. Roy. Soc., 1872. |
| Highland Boundary. | 45 42 | 70 28 | 1844.5 | +13.83 | +3.28 | +17.11 | (Bound. Sur.). | Phil. Trans. Roy. Soc., 1872. |
| Wallace Harbor. | 45 49 | 63 26 | 1840.5 | +19.83 | +2.89 | +22.72 | H. W. Bayfield. | Phil. Trans. Roy. Soc., 1872. |
| Pugwash Harbor. | 45 53 | 63 41 | 1840.5 | +19.67 | +2.89 | +22.56 | H. W. Bayfield. | Phil. Trans. Roy. Soc., 1872. |
| Drummondville. | 45 53 | 72 34 | 1842.5 | +12.47 | +4.08 | +16.55 | J. H. Lefroy. | Phil. Trans. Roy. Soc., 1872. |
| Sorel. | 46 03 | 73 00 | 1842.5 | +11.37 | +4.29 | +15.66 | J. H. Lefroy. | Phil. Trans. Roy. Soc., 1872. |
| Stone Island. | 46 06 | 73 02 | 1830.5 | +10.50 | +5.52 | +16.02 | H. W. Bayfield. | Phil. Trans. Roy. Soc., 1872. |
| Isle de Grace. | 46 06 | 73 07 | 1830.5 | +10.45 | +5.52 | +15.97 | H. W. Bayfield. | Phil. Trans. Roy. Soc., 1872. |
| Cape Tormentine. | 46 10 | 63 50 | 1840.5 | +20.00 | +2.89 | +22.89 | H. W. Bayfield. | Phil. Trans. Roy. Soc., 1872. |
| Georgetown. | 46 11 | 62 33 | 1843.5 | +21.97 | +2.54 | +24.51 | H. W. Bayfield. | Phil. Trans. Roy. Soc., 1872. |
| Charlotte Town (S. V. S.). | 46 14 | 63 27 | 1862.41 | +23.32 | ------ | +23.66 | J. H. Orlebar. | MS. in C. and G. S. Office. |

*Table of Observed Magnetic Declinations and Values reduced to the Year* 1890—Continued.

BRITISH POSSESSIONS AND DOMINION OF CANADA, TO LONGITUDE 75° WEST—Continued.

| Name of station. | $\varphi$ | $\lambda$ | $t$ | D | $\Delta$D | $D_{1890.0}$ | Observer. | Reference. |
|---|---|---|---|---|---|---|---|---|
| | ° ′ | ° ′ | | ° | ° | ° | | |
| Isle Lake St. Peter. | 46 14 | 72 44 | 1828.5 | +11.25 | +5.42 | +16.67 | J. H. Lefroy, | Phil. Trans. Roy. Soc., 1872. |
| Carleton Head. | 46 15 | 63 43 | 1840.5 | +20.30 | +2.89 | +23.19 | H. W. Bayfield. | Phil. Trans. Roy. Soc., 1872. |
| Shediac Island. | 46 15 | 64 23 | 1839.5 | +19.98 | +3.02 | +23.00 | H. W. Bayfield. | Phil. Trans. Roy. Soc., 1872. |
| Cape Breton. | 46 17 | 60 23 | 1848.5 | +23.68 | +1.65 | +25.33 | G. W. Keely. | Phil. Trans. Roy. Soc., 1872. |
| Three Rivers. | 46 19 | 72 36 | 1842.5 | +11.97 | +4.08 | +16.05 | J. H. Lefroy. | Phil. Trans. Roy. Soc., 1872. |
| River St. Maurice. | 46 21 | 72 43 | 1835.5 | +11.53 | +4.81 | +16.34 | H. W. Bayfield. | Phil. Trans. Roy. Soc., 1872. |
| Beçancour. | 46 22 | 71 33 | 1876.63 | +15.72 | +0.25 | +15.97 | F. E. Hilgard. | Nat. Acad. Sc. |
| Badeque Harbor. | 46 24 | 63 48 | 1841.5 | +20.20 | +2.77 | +22.97 | H. W. Bayfield. | Phil. Trans. Roy. Soc., 1872. |
| River St. Croix. | 46 25 | 70 03 | 1844.5 | +15.03 | +3.24 | +18.27 | (Bound. Sur.). | Phil. Trans. Roy. Soc., 1872. |
| Isle Bigot and River Champlain. | 46 26 | 72 24 | 1835.5 | +12.69 | +4.81 | +17.50 | H. W. Bayfield. | Phil. Trans. Roy. Soc., 1872. |
| Cape Turner. | 46 30 | 63 20 | 1845.5 | +21.68 | +2.30 | +23.98 | H. W. Bayfield. | Phil. Trans. Roy. Soc., 1872. |
| Richmond Bay. | 46 34 | 63 43 | 1845.5 | +21.00 | +2.30 | +23.30 | H. W. Bayfield. | Phil. Trans. Roy. Soc., 1872. |
| Grondine. | 46 34 | 72 24 | 1835.5 | +12.45 | +4.81 | +17.26 | H. W. Bayfield. | Phil. Trans. Roy. Soc., 1872. |
| Platon Point. | 46 40 | 71 54 | 1837.5 | +12.87 | +3.97 | +16.84 | H. W. Bayfield. | Phil. Trans. Roy. Soc., 1872. |
| Richibucto River. | 46 43 | 64 49 | 1839.5 | +19.83 | +3.02 | +22.85 | H. W. Bayfield. | Phil. Trans. Roy. Soc., 1872. |
| Cascumpeque. | 46 48 | 64 03 | 1845.5 | +21.17 | +2.30 | +23.47 | H. W. Bayfield. | Phil. Trans. Roy. Soc., 1872. |
| Saint Thomas. | 46 59 | 70 33 | 1876.65 | +17.84 | +0.25 | +18.09 | F. E. Hilgard. | Nat. Acad. Sc. |
| Crane Island. | 47 05 | 70 32 | 1831.5 | +14.47 | +4.52 | +18.99 | H. W. Bayfield. | Phil. Trans. Roy. Soc., 1872. |
| Miramichi, Vin Island. | 47 06 | 65 04 | 1857.4 | +21.40 | +1.07 | +22.47 | J. H. Orlebar. | MS. in C. and G. S. Office. |
| Stone Pillar. | 47 12 | 70 22 | 1831.5 | +14.82 | +4.52 | +19.34 | H. W. Bayfield. | Phil. Trans. Roy. Soc., 1872. |
| Amherst Harbor. | 47 15 | 61 50 | 1833.5 | +22.60 | +3.85 | +26.45 | H. W. Bayfield. | Phil. Trans. Roy. Soc., 1872. |
| Isle aux Coudres. | 47 25 | 70 26 | 1831.5 | +15.28 | +4.52 | +19.80 | H. W. Bayfield, | Phil. Trans. Roy. Soc., 1872. |
| Bull Island, Newfoundland. | 47 26 | 53 47 | 1858.6 | +30.45 | +0.10 | +30.55 | —— Otter. | MS. of Sir F. J. Evans, 1867. |

*Table of Observed Magnetic Declinations and Values reduced to the Year* 1890—Continued.

BRITISH POSSESSIONS AND DOMINION OF CANADA, TO LONGITUDE 75° WEST—Continued.

| Name of station. | φ | λ | t | D | ΔD | $D_{1890.0}$ | Observer. | Reference. |
|---|---|---|---|---|---|---|---|---|
| | ° ′ | ° ′ | | ° | ° | ° | | |
| Duck Island, near Cape Ray. | 47 34 | 59 11 | 1856.5 | +27.37 | +0.68 | +28.05 | J. H. Orlebar. | MS. of Sir F. J. Evans, 1867. |
| Bay Roberts, Newfoundland. | 47 35 | 53 15 | 1866.72 | +30.93 | —0.21 | +30.72 | J. H. Orlebar. | MS. of Sir F. J. Evans, 1867. |
| Cape Ray, Newfoundland. | 47 37 | 59 19 | 1856.5 | +27.62 | +0.68 | +28.30 | J. H. Orlebar. | MS. of Sir F. J. Evans, 1867. |
| Timiscuata Lake. | 47 38 | 69 00 | 1818.5 | +16.52 | +5.25 | +21.77 | J. Johnson. | Sill. Jour., Vol. 34, 1838. |
| Carbiniere, Newfoundland. | 47 44 | 53 14 | 1866.53 | +31.03 | —0.20 | +30.83 | J. H. Orlebar. | MS. of Sir F. J. Evans, 1867. |
| Shipfrigan Harbor. | 47 45 | 64 43 | 1838.5 | +21.72 | +3.16 | +24.88 | H. W. Bayfield. | Phil. Trans. Roy. Soc., 1872. |
| Bryon Island. | 47 48 | 61 26 | 1835.5 | +23.50 | +3.57 | +27.07 | H. W. Bayfield. | Phil. Trans. Roy. Soc., 1872. |
| Caraquetta Island. | 47 50 | 64 53 | 1838.5 | +21.50 | +3.16 | +24.66 | H. W. Bayfield. | Phil. Trans. Roy. Soc., 1872. |
| Riviere au Loup en bas. | 47 51 | 69 25 | 1876.66 | +20.65 | +0.24 | +20.89 | F. E. Hilgard. | Nat. Acad. Sc. |
| Riviere du Loup. | 47 51 | 69 35 | 1831.5 | +17.60 | +4.52 | +22.12 | H. W. Bayfield. | Phil. Trans. Roy. Soc., 1872. |
| Heart's Content, Newfoundland. | 47 52 | 53 22 | 1866.58 | +31.35 | —0.21 | +31.14 | J. H. Orlebar. | MS. of Sir F. J. Evans, 1867. |
| Brandy Pot Island. | 47 53 | 69 42 | 1836.5 | +17.42 | +4.06 | +21.48 | H. W. Bayfield. | Phil. Trans. Roy. Soc., 1872. |
| Northeast Boundary (claimed before 1842). | 48 00 | 67 47 | 1859.5 | +19.50 | +1.23 | +20.73 | (State Sur.). | Sill. Jour., Vol. 39, 1849. |
| Hants Harbor, Newfoundland. | 48 01 | 53 14 | 1866.51 | +32.22 | —0.20 | +32.02 | J. H. Orlebar. | MS. of Sir F. J. Evans, 1867. |
| Miscon Harbor. | 48 01 | 64 30 | 1838.5 | +20.58 | +3.16 | +23.74 | H. W. Bayfield. | Phil. Trans. Roy. Soc., 1872. |
| Passebiac. | 48 01 | 65 35 | 1838.5 | +21.35 | +3.16 | +24.51 | H. W. Bayfield. | Phil. Trans. Roy. Soc., 1872. |
| Dalhousie Island. | 48 04 | 66 23 | 1839.5 | +20.25 | +3.21 | +23.46 | H. W. Bayfield. | Phil. Trans. Roy. Soc., 1872. |
| Old Perlican, Newfoundland. | 48 05 | 53 00 | 1866.41 | +31.70 | —0.20 | +31.50 | J. H. Orlebar. | MS. of Sir F. J. Evans, 1867. |
| Carleton Point. | 48 05 | 66 08 | 1838.5 | +20.38 | +3.34 | +23.72 | H. W. Bayfield. | Phil. Trans. Roy. Soc., 1872. |
| Tadousac. | 48 09 | 69 44 | 1829.5 | +17.58 | +4.69 | +22.27 | H. W. Bayfield. | Phil. Trans. Roy. Soc., 1872. |
| Point Maquereau. | 48 12 | 64 47 | 1837.5 | +22.00 | +3.29 | +25.29 | H. W. Bayfield. | Phil. Trans. Roy. Soc., 1872. |
| Razade Inlet. | 48 13 | 69 09 | 1829.5 | +17.57 | +4.69 | +22.26 | H. W. Bayfield. | Phil. Trans. Roy. Soc., 1872. |

*Table of Observed Magnetic Declinations and Values reduced to the Year* 1890—Continued.

BRITISH POSSESSIONS AND DOMINION OF CANADA, TO LONGITUDE 75° WEST—Continued.

| Name of station. | $\varphi$ | $\lambda$ | $t$ | D | $\Delta$D | $D_{1890.0}$ | Observer. | Reference. |
|---|---|---|---|---|---|---|---|---|
| | ° ′ | ° ′ | | ° | ° | ° | | |
| Bic Island. | 48 25 | 68 49 | 1830.5 | +17.48 | +4.61 | +22.09 | H. W. Bayfield. | Phil. Trans. Roy. Soc., 1872. |
| King's Cove, Newfoundland. | 48 34 | 53 18 | 1866.55 | +32.62 | —0.20 | +32.42 | J. H. Orlebar. | MS. of Sir F. J. Evans, 1867. |
| Port Neuf. | 48 37 | 69 07 | 1831.5 | +17.60 | +4.32 | +21.92 | H. W. Bayfield. | Phil. Trans. Roy. Soc., 1872. |
| Bonavista, Newfoundland. | 48 39 | 53 08 | 1866.43 | +34.09 | —0.20 | +33.89 | J. H. Orlebar. | MS. of Sir F. J. Evans, 1867. |
| Gaspe Basin. | 48 50 | 64 30 | 1846.0 | +22.82 | +2.24 | +25.06 | H. W. Bayfield. | Phil. Trans. Roy. Soc., 1872. |
| Bersimis Point. | 48 56 | 68 38 | 1831.5 | +18.80 | +4.32 | +23.12 | H. W. Bayfield. | Phil. Trans. Roy. Soc., 1872. |
| Cape Chatte. | 49 06 | 66 46 | 1830.5 | +21.45 | +4.44 | +25.89 | H. W. Bayfield. | Phil. Trans. Roy. Soc., 1872. |
| East Point, Anticosti. | 49 08 | 61 42 | 1830.5 | +25.32 | +4.26 | +29.58 | H. W. Bayfield. | Phil. Trans. Roy. Soc., 1872. |
| Mt. Lewis River. | 49 15 | 65 45 | 1828.5 | +22.00 | +4.4 | +26.4 | H. W. Bayfield. | Phil. Trans. Roy. Soc., 1872. |
| Point de Monts. | 49 19 | 67 23 | 1830.5 | +20.22 | +4.44 | +24.66 | H. W. Bayfield. | Phil. Trans. Roy. Soc., 1872. |
| Saint Nicholas Harbor. | 49 19 | 67 48 | 1830.5 | +19.95 | +4.44 | +24.39 | H. W. Bayfield. | Phil. Trans. Roy. Soc., 1872. |
| Egg Inlet. | 49 38 | 67 11 | 1832.5 | +21.58 | +4.21 | +25.79 | H. W. Bayfield. | Phil. Trans. Roy. Soc., 1872. |
| Cape Henry, Anticosti. | 49 48 | 64 24 | 1830.0 | +24.37 | +4.33 | +28.70 | H. W. Bayfield. | Phil. Trans. Roy. Soc., 1872. |
| Hamilton's Inlet, NW. River, Labrador. | 53 32 | 60 09 | 1860.66 | +39.05 | ------ | ------- | J. H. Orlebar. | MS. of Sir F. J. Evans, 1867. |
| Hamilton's Inlet, near Rigouletta, Labrador. | 54 11 | 58 25 | 1860.66 | +41.15 | ------ | ------- | J. H. Orlebar. | MS. of Sir F. J. Evans, 1867. |
| Hamilton's Inlet, Cats Islet. | 54 22 | 57 54 | 1860.66 | +40.65 | ------ | ------- | J. H. Orlebar. | MS. of Sir F. J. Evans, 1867. |

BRITISH POSSESSIONS AND DOMINION OF CANADA, BETWEEN LONGITUDES 75° AND 90° WEST.

Group 1.

| | | | | | | | | |
|---|---|---|---|---|---|---|---|---|
| Foot of Long Portage. | 47 55 | 84 45 | 1880.62 | + 3.23 | +0.64 | + 3.87 | S. W. Very. | C. and G. S. Rep., 1881, App. 9. |
| Michipicoten. | 47 56 | 84 51 | 1880.62 | + 1.34 | +0.64 | + 1.98 | S. W. Very. | C. and G. S. Rep., 1881, App. 9. |
| Big Stony Portage. | 48 14 | 84 15 | 1880.57 | + 4.20 | +0.64 | + 4.84 | S. W. Very. | C. and G. S. Rep., 1881, App. 9. |

*Table of Observed Magnetic Declinations and Values reduced to the Year* 1890—Continued.

BRITISH POSSESSIONS AND DOMINION OF CANADA, BETWEEN LONGITUDES 75° AND 90° W.—Cont'd.

| Name of station. | $\varphi$ | $\lambda$ | $t$ | D | $\Delta$D | $D_{1890\cdot0}$ | Observer. | Reference. |
|---|---|---|---|---|---|---|---|---|
| | ° ′ | ° ′ | | ° | ° | ° | | |
| Sandy Beach. | 48 18 | 84 01 | 1880.57 | + 1.32 | +0.64 | + 1.96 | S. W. Very. | C. and G. S. Rep., 1881, App. 9. |
| Fairy Point. | 48 21 | 83 44 | 1880.58 | + 3.37 | +0.64 | + 4.01 | S. W. Very. | C. and G. S. Rep., 1881, App. 9. |
| Missinaibi. | 48 29 | 83 28 | 1880.58 | + 2.35 | +0.64 | + 2.99 | S. W. Very. | C. and G. S. Rep., 1881, App. 9. |
| Foot of Swampy Grounds Portage. | 48 42 | 83 24 | 1880.68 | + 0.21 | +0.63 | + 0.84 | S. W. Very. | C. and G. S. Rep., 1881, App. 9. |
| Saint Paul's Rapids. | 48 50 | 83 24 | 1880.68 | + 4.17 | +0.63 | + 4.80 | S. W. Very. | C. and G. S. Rep., 1881, App. 9. |
| Moose River. | 49 08 | 83 22 | 1880.67 | + 4.34 | +0.68 | + 5.02 | S. W. Very. | C. and G. S. Rep., 1881, App. 9. |
| Twin Portage. | 49 12 | 83 24 | 1880.59 | + 4.97 | +0.69 | + 5.66 | S. W. Very. | C. and G. S. Rep., 1881, App. 9. |
| Albany Rapids. | 49 22 | 83 30 | 1880.67 | + 4.18 | +0.68 | + 4.86 | S. W. Very. | C. and G. S. Rep., 1881, App. 9. |
| Kettle Portage. | 49 47 | 83 16 | 1880.60 | + 4.25 | +0.69 | + 4.94 | S. W. Very. | C. and G. S. Rep., 1881, App. 9. |
| Storehouse Portage. | 50 04 | 83 16 | 1880.66 | + 4.91 | +0.69 | + 5.60 | S. W. Very. | C. and G. S. Rep., 1881, App. 9. |
| Near Cedar Island. | 50 21 | 82 42 | 1880.63 | + 5.24 | +0.70 | + 5.94 | S. W. Very. | C. and G. S. Rep., 1881, App. 9. |
| Moose River, near Falling Brook. | 50 36 | 82 07 | 1880.61 | + 7.95 | +0.70 | + 8.65 | S. W. Very. | C. and G. S. Rep., 1881, App. 9. |
| Long Gravel Bed. | 50 44 | 81 48 | 1880.65 | + 8.03 | +0.71 | + 8.74 | S. W. Very. | C. and G. S. Rep., 1881, App. 9. |
| Gypsum Beds. | 50 50 | 81 15 | 1880.65 | + 9.88 | +0.72 | +10.60 | S. W. Very. | C. and G. S. Rep., 1881, App. 9. |
| Moose Factory, Hudson's Bay. | 51 15 | 80 40 | 1880.63 | +15.46 | +0.73 | +16.19 | S. W. Very. | C. and G. S. Rep., 1881, App. 9. |

Group 2.

| | | | | | | | | |
|---|---|---|---|---|---|---|---|---|
| Middle Island, Lake Erie. | 41 41 | 82 41 | 1845.5 | — 1.90 | +2.71 | + 0.81 | J. H. Simpson. | P. P., U. S. Eng's, No. 24, 1882. |
| Pointe Pelée Island, Lake Erie. | 41 49 | 82 41 | 1877.43 | — 0.25 | +0.63 | + 0.38 | F. Terry. | P. P., U. S. Eng's, No. 24, 1882. |
| East Sister Island, Lake Erie. | 41 49 | 82 51 | 1845.5 | — 2.30 | +2.71 | + 0.41 | J. H. Simpson. | P. P., U. S. Eng's, No. 24, 1882. |
| Middle Sister Island, Lake Erie. | 41 51 | 83 00 | 1845.5 | — 2.00 | +2.71 | + 0.71 | J. H. Simpson. | P. P., U. S. Eng's, No. 24, 1882. |
| Pointe Pelée. | 41 55 | 82 31 | 1877.71 | — 0.42 | +0.62 | + 0.20 | F. M. Towar. | P. P., U. S. Eng's, No. 24, 1882. |
| Pigeon Bay. | 41 59 | 82 33 | 1877.71 | + 0.17 | +0.62 | + 0.79 | A. C. Lamson. | P. P., U. S. Eng's, No. 24, 1882. |

*Table of Observed Magnetic Declinations and Values reduced to the Year* 1890—Continued.

BRITISH POSSESSIONS AND DOMINION OF CANADA, BETWEEN LONGITUDES 75° AND 90° W.—Cont'd.

| Name of station. | $\varphi$ | $\lambda$ | $t$ | D | $\Delta$D | $D_{1890.0}$ | Observer. | Reference. |
|---|---|---|---|---|---|---|---|---|
| | ° ′ | ° ′ | | ° | ° | ° | | |
| Colchester. | 42 00 | 82 58 | 1877.68 | — 0.52 | +0.66 | + 0.14 | F. M. Towar. | P. P., U. S. Eng's, No. 24, 1882. |
| Kingsville. | 42 02 | 82 45 | 1877.69 | — 0.50 | +0.64 | + 0.14 | F. Terry. | P. P., U. S. Eng's, No. 24, 1882. |
| Bois Blanc Island. | 42 05 | 83 07 | 1874.36 | — 0.53 | +0.86 | + 0.33 | A. C. Lamson. | P. P., U. S. Eng's, No. 24, 1882. |
| Amherstburgh, Ontario. | 42 07 | 83 07 | 1840.5 | — 1.50 | ------ | ------ | J. N. Macomb. | P. P., U. S. Eng's, No. 24, 1882. |
| Pointe aux Pines. | 42 15 | 81 52 | 1845.5 | — 1.07 | +2.80 | + 1.73 | J. H. Simpson. | P. P., U. S. Eng's, No. 24, 1882. |
| Rondeau Light. | 42 16 | 81 54 | 1845.5 | — 1.07 | +2.80 | + 1.73 | (Chart). | U. S. Lake Sur. |
| River aux Puces. | 42 18 | 82 47 | 1868.96 | — 1.22 | +1.21 | — 0.01 | J. F. Gregory. | P. P., U. S. Eng's, No. 24, 1882. |
| Mouth of Thames River. | 42 19 | 82 27 | 1871.3 | — 0.48 | +1.06 | + 0.58 | A. C. Lamson. | P. P., U. S. Eng's, No. 24, 1882. |
| Belle Isle. | 42 20 | 83 00 | 1873.85 | — 0.58 | +0.78 | + 0.20 | A. C. Lamson. | P. P., U. S. Eng's, No. 24, 1882. |
| Long Point. | 42 33 | 80 05 | 1845.5 | + 0.92 | +2.84 | + 3.76 | J. H. Simpson. | P. P., U. S. Eng's, No. 24, 1882. |
| Long Point. | 42 33 | 80 09 | 1870.5 | + 1.67 | +1.28 | + 2.95 | ---------- | P. P., U. S. Eng's, No. 24, 1882. |
| Long Point. | 42 34 | 80 11 | 1876.63 | + 2.67 | +0.86 | + 3.53 | F. Terry. | P. P., U. S. Eng's, No. 24, 1882. |
| Mohawk Island. | 42 50 | 79 37 | 1870.5 | + 2.67 | +1.47 | + 4.14 | ---------- | P. P., U. S. Eng's, No. 24, 1882. |
| Ridgeway. | 42 52 | 79 04 | 1875.65 | + 3.55 | +1.04 | + 4.59 | J. Eisenmann. | P. P., U. S. Eng's, No. 24, 1882. |
| Port Colborne. | 42 53 | 79 14 | 1875.60 | + 3.75 | +1.04 | + 4.79 | J. Eisenmann. | P. P., U. S. Eng's, No. 24. 1882. |
| Lake Wawanash, Ontario. | 43 01 | 82 19 | 1859.68 | + 0.67 | +1.90 | + 2.57 | H. C. Penny. | P. P., U. S. Eng's, No. 24, 1882. |
| Fort Dalhousie. | 43 12 | 79 16 | 1875.5 | + 4.37 | +0.93 | + 5.30 | J. Eisenmann. | P. P., U. S. Eng's, No. 24, 1882. |
| Cape Ipperwash, Ontario. | 43 13 | 82 00 | 1859.80 | + 0.37 | +1.89 | + 2.26 | H. C. Penny. | P. P., U. S. Eng's, No. 24. 1882. |
| Toronto, Magnetic Observatory (S. V. S.). | 43 39 | 79 23 | 1884.6 | + 3.95 | ------ | + 4.12 | O. J. Klotz. | Proc. Ass. Dom. Land Sur's, 1885. |
| Goderich. | 43 44 | 81 43 | 1860.5 | + 1.70 | +1.86 | + 3.56 | W. P. Smith. | MS. of Lake Survey. |
| Point Peter. | 43 51 | 77 10 | 1869.5 | + 6.0 | +1.7 | + 7.7 | ---------- | P. P., U. S. Eng's, No. 24, 1882. |
| Darlington. | 43 52 | 78 38 | 1869.5 | + 3.50 | +1.59 | + 5.09 | ---------- | P. P., U. S. Eng's, No. 24, 1882. |

*Table of Observed Magnetic Declinations and Values reduced to the Year* 1890—Continued.

BRITISH POSSESSIONS AND DOMINION OF CANADA, BETWEEN LONGITUDES 75° AND 90° W.—Cont'd.

| Name of station. | φ | λ | t | D | ΔD | $D_{1890.0}$ | Observer. | Reference. |
|---|---|---|---|---|---|---|---|---|
| | ° ′ | ° ′ | | ° | ° | ° | | |
| Oshaway Port. | 43 52 | 78 48 | 1869.5 | +3.50 | +1.59 | + 5.09 | ---------- | P. P., U. S. Eng's, No. 24, 1882. |
| Duck Island. | 43 56 | 76 37 | 1874.58 | +5.00 | +1.24 | + 6.24 | C. Donovan. | P. P., U. S. Eng's, No. 24, 1882. |
| Timber Island. | 43 57 | 76 50 | 1874.63 | +7.32 | +1.24 | + 8.56 | F. M. Towar. | P. P., U. S. Eng's, No. 24, 1882. |
| Point Yeo. | 44 03 | 76 30 | 1818.5 | +2.50 | ------ | ------ | W. F. W. Owen. | 22d Regent's Rep., N. Y. |
| Cookstown. | 44 08 | 79 37 | 1880.00 | +4.06 | +0.50 | + 4.56 | H. Creswick. | MS. in C. and G. S. Office. |
| Wolfe Island, near Garden Island. | 44 11 | 76 29 | 1874.55 | +6.75 | +1.30 | + 8.05 | F. Terry. | P. P., U. S. Eng's, No. 24, 1882. |
| Amherst Island, east end. | 44 11 | 76 37 | 1874.56 | +7.20 | +1.30 | + 8.50 | F. M. Towar. | P. P., U. S. Eng's, No. 24, 1882. |
| Kingston. | 44 13 | 76 35 | 1840.5 | +4.00 | +4.29 | + 8.29 | ---------- | Phil. Trans. Roy. Soc., 1849. |
| Halliday's Point. | 44 14 | 76 18 | 1873.5 | +7.50 | +1.40 | + 8.90 | H. Custer. | P. P., U. S. Eng's, No. 24, 1882. |
| Wolfe Isl'd, Brown's Point. | 44 14 | 76 24 | 1874.66 | +6.42 | +1.29 | + 7.71 | F. M. Towar. | P. P., U. S. Eng's, No. 24, 1882. |
| Gananoque. | 44 18 | 76 12 | 1874.36 | +8.55 | +1.31 | + 9.86 | F. M. Towar. | P. P., U. S. Eng's, No. 24, 1882. |
| Allendale. | 44 20 | 79 41 | 1879.86 | +4.80 | +0.51 | + 5.31 | H. Creswick. | MS. in C. and G. S. Office. |
| Barrie, Lake Simcoe. | 44 21 | 79 37 | 1878.53 | +4.72 | +0.62 | + 5.34 | H. Creswick. | MS. in C. and G. S. Office. |
| Collingwood. | 44 31 | 80 12 | 1869.5 | +2.33 | +1.50 | + 3.83 | ---------- | P. P., U. S. Eng's, No. 24, 1882. |
| Two miles above Ogdensburgh. | 44 44 | 75 32 | 1818.5 | +3.50 | ------ | ------ | W. F. W. Owen. | 22d Regent's Rep., N. Y. |
| Penetanquishene. | 44 49 | 80 01 | 1848.5 | +1.47 | +2.56 | + 4.03 | —— Typer. | Phil. Trans. Roy. Soc., 1872. |
| Western Isles. | 45 05 | 80 25 | 1820.5 | −1.42 | | ------ | H. W. Bayfield. | Phil. Trans. Roy. Soc., 1872. |
| Chin Cape. | 45 07 | 81 25 | 1819.5 | −0.65 | ------ | ------ | H. W. Bayfield. | Phil. Trans. Roy. Soc., 1872. |
| Cape Hurd. | 45 14 | 81 51 | 1821.5 | −0.35 | ------ | ------ | H. W. Bayfield. | Phil. Trans. Roy. Soc., 1872. |
| Cabot's Head. | 45 15 | 81 26 | 1819.5 | −0.40 | ------ | ------ | H. W. Bayfield. | Phil. Trans. Roy. Soc., 1872. |
| Cove Island, entrance to Georgian Bay. | 45 19 | 81 42 | 1860.5 | +3.80 | +1.88 | + 5.68 | ---------- | U. S. Lake Sur. |
| Cove Island. | 45 20 | 81 43 | 1860.66 | +3.98 | +1.86 | + 5.84 | W. P. Smith. | U. S. Lake Sur. Rep., 1882. |
| Isle of Coves. | 45 20 | 81 43 | 1870.5 | +0.83(? | ------ | ----- | ---------- | P. P., U. S. Eng's, No. 24, 1882. |

*Table of Observed Magnetic Declinations and Values reduced to the Year* 1890—Continued.

BRITISH POSSESSIONS AND DOMINION OF CANADA, BETWEEN LONGITUDES 75° AND 90° W.—Cont'd.

| Name of station. | $\varphi$ | $\lambda$ | $t$ | D | $\Delta$D | $D_{1890.0}$ | Observer. | Reference. |
|---|---|---|---|---|---|---|---|---|
| | ° ′ | ° ′ | | ° | ° | ° | | |
| Half Moon Island. | 45 27 | 81 35 | 1821.5 | — 0.37 | ------ | ------ | H. W. Bayfield. | Phil. Trans. Roy. Soc., 1872. |
| Manitoulin Island. | 45 28 | 81 54 | 1821.5 | — 1.22 | ------ | ------ | H. W. Bayfield. | Phil. Trans. Roy. Soc., 1872. |
| Point Aylmer. | 45 29 | 75 48 | 1843.5 | + 6.97 | +4.33 | +11.30 | J. H. Lefroy. | Phil. Trans. Roy. Soc., 1872. |
| Rattlesnake Harbor. | 45 32 | 81 49 | 1821.5 | — 0.83 | ------ | ------ | H. W. Bayfield. | Phil. Trans. Roy. Soc., 1872. |
| Isles off Franklin Inlet. | 45 33 | 80 38 | 1821.5 | — 0.67 | ------ | ------ | H. W. Bayfield. | Phil. Trans. Roy. Soc., 1872. |
| Fort Portage. | 45 36 | 76 53 | 1843.5 | + 5.18 | +4.02 | + 9.20 | J. H. Lefroy. | Phil. Trans. Roy. Soc., 1872. |
| Alfred Township. | 45 37 | 75 12 | 1843.5 | + 6.97 | +4.33 | +11.30 | J. H. Lefroy. | Phil. Trans. Roy. Soc., 1872. |
| White Shingle Bank. | 45 37 | 81 31 | 1821.5 | — 0.35 | ------ | ------ | H. W. Bayfield. | Phil. Trans. Roy. Soc., 1872. |
| Island of Henvey Inlet. | 45 51 | 80 53 | 1821.5 | — 1.55 | ------ | ------ | H. W. Bayfield. | Phil. Trans. Roy. Soc., 1872. |
| Islet of Grondine Point. | 45 54 | 81 15 | 1821.5 | + 0.53 | ------ | ------ | H. W. Bayfield. | Phil. Trans. Roy. Soc., 1872. |
| Drummond Island. | 45 56 | 83 42 | 1859.5 | — 0.22 | +1.88 | + 1.66 | ------ | U. S. Lake Sur. |
| Lake Huron. | 45 57 | 81 32 | 1843.5 | + 0.63 | +2.59 | + 3.22 | J. H. Lefroy. | Phil. Trans. Roy. Soc., 1872. |
| Point on Shore. | 45 57 | 81 38 | 1821.5 | + 0.52 | ------ | ------ | H. W. Bayfield. | Phil. Trans. Roy. Soc., 1872. |
| Saint Joseph Island. | 46 04 | 84 09 | 1822.5 | — 3.00 | ------ | ------ | H. W. Bayfield. | Phil. Trans. Roy. Soc., 1872. |
| Fort La Cloche. | 46 07 | 82 25 | 1843.5 | + 1.97 | +2.47 | + 4.44 | J. H. Lefroy. | Phil. Trans. Roy. Soc., 1872. |
| Missesauga. | 46 08 | 83 10 | 1843.5 | + 0.92 | +2.47 | + 3.39 | J. H. Lefroy. | Phil. Trans. Roy. Soc., 1872. |
| Cranberry Bay. | 46 11 | 83 03 | 1845.5 | + 0.42 | +2.41 | + 2.83 | J. H. Lefroy. | Phil. Trans. Roy. Soc., 1872. |
| Roche Capitaine. | 46 15 | 78 20 | 1843.5 | + 4.80 | +3.26 | + 8.06 | J. H. Lefroy. | Phil. Trans. Roy. Soc., 1872. |
| Tessalon Point. | 46 16 | 83 31 | 1843.5 | + 0.52 | +2.47 | + 2.99 | J. H. Lefroy. | Phil. Trans. Roy. Soc., 1872. |
| Portage du Grand-vase. | 46 19 | 79 07 | 1843.5 | + 3.87 | +3.26 | + 7.13 | J. H. Lefroy. | Phil. Trans. Roy. Soc., 1872. |
| Bear Encampment. | 46 20 | 83 56 | 1845.5 | — 0.05 | +2.41 | + 2.36 | J. H. Lefroy. | Phil. Trans. Roy. Soc., 1872. |
| Portlock Harbor. | 46 20 | 84 07 | 1822.5 | — 2.85 | ------ | ------ | H. W. Bayfield. | Phil. Trans. Roy. Soc., 1872. |
| Mission Point. | 46 27 | 84 36 | 1855.6 | — 2.15 | +2.07 | — 0.08 | E. P. Scammon. | P. P., U. S. Eng's, No. 24, 1882. |

*Table of Observed Magnetic Declinations and Values reduced to the Year* 1890—Continued.

BRITISH POSSESSIONS AND DOMINION OF CANADA, BETWEEN LONGITUDES 75° AND 90° W.—Cont'd.

| Name of station. | $\varphi$ | $\lambda$ | $t$ | D | $\Delta$D | $D_{1890.0}$ | Observer. | Reference. |
|---|---|---|---|---|---|---|---|---|
| | ° ′ | ° ′ | | ° | ° | ° | | |
| Pointe aux Pins. | 46 28 | 84 28 | 1855.5 | — 1.40 | +2.07 | + 0.67 | E. P. Scammon. | P. P., U. S. Eng's, No. 24, 1882. |
| Point Iroquois. | 46 29 | 84 47 | 1824.5 | — 3.37 | ------ | ------ | H. W. Bayfield. | Phil. Trans. Roy. Soc., 1872. |
| Head of Lake George. | 46 32 | 84 20 | 1825.5 | — 3.32 | ------ | ------ | H. W. Bayfield. | Phil. Trans. Roy. Soc., 1872. |
| Gulais Point. | 46 41 | 84 33 | 1867.6 | — 0.38 | +1.45 | + 1.07 | O. N. Chaffee. | P. P., U. S. Eng's, No. 24, 1882. |
| South Sandy Island, White-fish Bay. | 46 48 | 84 39 | 1867.5 | — 0.25 | +1.45 | + 1.20 | O. N. Chaffee. | P. P., U. S. Eng's, No. 24, 1882. |
| Point au Crêpe. | 46 58 | 84 58 | 1843.5 | — 2.25 | +2.47 | + 0.22 | J. H. Lefroy. | Phil. Trans. Roy. Soc., 1872. |
| Little Trout River. | 47 09 | 88 54 | 1824.5 | — 9.20 | ------ | ------ | H. W. Bayfield. | Phil. Trans. Roy. Soc., 1872. |
| Montreal Island. | 47 19 | 84 52 | 1824.5 | — 3.47 | ------ | ------ | H. W. Bayfield. | Phil. Trans. Roy. Soc., 1872. |
| Gargantua. | 47 35 | 85 11 | 1824.5 | — 4.10 | ------ | ------ | H. W. Bayfield. | Phil. Trans. Roy. Soc., 1872. |
| Near Chienne River. | 47 52 | 85 24 | 1843.5 | — 2.37 | +2.5 | + 0.1 | J. H. Lefroy. | Phil. Trans. Roy. Soc., 1872. |
| Le Petit Mort. | 47 58 | 85 49 | 1843.5 | — 4.98 | +2.5 | — 2.5 | J. H. Lefroy. | Phil. Trans. Roy. Soc., 1872. |
| Grand Portage. | 47 58 | 89 49 | 1824.5 | —11.00 | ------ | ------ | H. W. Bayfield. | Phil. Trans. Roy. Soc., 1872. |
| Otter Head. | 48 05 | 86 10 | 1824.5 | — 5.12 | ------ | ------ | H. W. Bayfield. | Phil. Trans. Roy. Soc., 1872. |
| Isle Royale. | 48 07 | 88 49 | 1824.5 | — 9.65 | ------ | ------ | H. W. Bayfield. | Phil. Trans. Roy. Soc., 1872. |
| Tip Top. | 48 15 | 86 08 | 1871.65 | — 0.05 | +1.05 | + 1.0 | C. B. Comstock. | MS. of U. S. Lake Sur. |
| Fort William. | 48 24 | 89 23 | 1844.5 | — 6.35 | ------ | ------ | J. H. Lefroy. | Phil. Trans. Roy. Soc., 1872. |
| Bad Portage. | 48 29 | 89 40 | 1843.5 | — 5.55 | ------ | ------ | J. H. Lefroy. | Phil. Trans. Roy. Soc., 1872. |
| Trembling Portage. | 48 31 | 90 00 | 1857.5 | — 6.35 | ------ | ------ | J. Palliser. | Phil. Trans. Roy. Soc., 1872. |
| White River. | 48 33 | 86 27 | 1844.5 | — 2.17 | ------ | ------ | J. H. Lefroy. | Phil. Trans. Roy. Soc., 1872. |
| Fort Pic. | 48 38 | 86 39 | 1844.5 | — 5.52 | ------ | ------ | J. H. Lefroy. | Phil. Trans. Roy. Soc., 1872. |
| Peninsular Harbor. | 48 44 | 86 28 | 1824.5 | — 6.33 | ------ | ------ | H. W. Bayfield. | Phil. Trans. Roy. Soc., 1872. |
| Point on Shore. | 48 44 | 87 00 | 1824.5 | — 7.70 | ------ | ------ | H. W. Bayfield. | Phil. Trans. Roy. Soc., 1872. |
| Height of Land. | 48 45 | 85 05 | 1874.5 | — 1.00 | +1.00 | 0.0 | W. A. Austin. | MS. in C. and G. S. Office. |

*Table of Observed Magnetic Declinations and Values reduced to the Year* 1890—Continued.

BRITISH POSSESSIONS AND DOMINION OF CANADA, BETWEEN LONGITUDES 75° AND 90° W.—Cont'd.

| Name of station. | φ | λ | t | D | ΔD | $D_{1890.0}$ | Observer. | Reference. |
|---|---|---|---|---|---|---|---|---|
| | ° ′ | ° ′ | | ° | ° | ° | | |
| Isle Saint Ignace. | 48 45 | 88 02 | 1824.5 | — 8.25 | ------ | ------ | H. W. Bayfield. | MS. in C. and G. S. Office. |
| Halting Place. | 48 45 | 89 53 | 1857.5 | — 8.90 | ------ | ------ | J. Palliser. | Phil. Trans. Roy. Soc., 1872. |
| Saint Ignace Harbor, observatory post. | 48 47 | 87 49 | 1871.68 | — 6.43 | +0.9 | — 5.5 | G. A. Marr. | Phil. Trans. Roy. Soc., 1872. |
| Dog Lake. | 48 47 | 89 40 | 1843.5 | — 6.43 | ------ | ------ | J. H. Lefroy. | Phil. Trans. Roy. Soc., 1872. |
| Terre Platte. | 48 49 | 87 45 | 1843.5 | — 5.67 | ------ | ------ | J. H. Lefroy. | Phil. Trans. Roy. Soc., 1872. |
| Halting Place. | 48 55* | 89 54 | 1857.5 | — 9.08 | ------ | ------ | J. Palliser. | Phil. Trans. Roy. Soc., 1872. |

* Corrected.

BRITISH POSSESSIONS, NORTHWEST TERRITORY, SOUTH OF LATITUDE 51° AND WEST OF LONGITUDE 90° WEST.

Group 1.

| | | | | | | | | |
|---|---|---|---|---|---|---|---|---|
| Esquimalt, Vancouver Island. | 48 25 | 123 26 | 1881.75 | —22.93 | —0.07 | —23.00 | H. E. Nichols. | C. and G. S. Rep., 1881, App. 9. |
| Departure Bay, Vancouver Island. | 49 13 | 123 57 | 1881.77 | —23.93 | —0.14 | —24.07 | H. E. Nichols. | C. and G. S. Rep., 1881, App. 9. |
| Friendly Cove, Nootka Sound (S.V.S.). | 49 36 | 126 38 | 1881.74 | —23.60 | ------ | —23.95 | H. E. Nichols. | C. and G. S. Rep., 1881, App. 9. |
| North Harbor, Brit. Col. | 50 29 | 128 04 | 1881.73 | —24.90 | —0.14 | —25.04 | H. E. Nichols. | C. and G. S. Rep., 1881, App. 9. |
| Anchorage Cove, Brit. Col. | 50 53 | 126 12 | 1881.59 | —25.71 | —0.14 | —25.85 | H. E. Nichols. | C. and G. S. Rep., 1881, App. 9. |
| Waddington Harbor. Bute Inlet. | 50 54 | 124 50 | 1881.58 | —25.37 | —0.14 | —25.51 | H. E. Nichols. | C. and G. S. Rep., 1881, App. 9. |

Group 2.

| | | | | | | | | |
|---|---|---|---|---|---|---|---|---|
| Second Portage. | 48 15 | 92 27 | 1843.5 | —10.25 | ------ | ------ | J. H. Lefroy. | Phil. Trans. Roy. Soc., 1872. |
| Whiffen Spit, Vancouver Island. | 48 22 | 123 44 | 1864.5 | —20.33 | —0.09 | —20.42 | —— Pender. | Phil. Trans. Roy. Soc., 1872. |
| Off Cape Beale, Vancouver Island. | 48 22 | 125 30 | 1788.5 | —18.50 | ------ | ------ | (Meares). | Meares' Narrative, communicated by G. Davidson. |
| Lake à la Crosse. | 48 24 | 92 10 | 1843.5 | — 7.88 | ------ | ------ | J. H. Lefroy. | Phil. Trans. Roy. Soc., 1872. |
| Halting Place. | 48 27 | 92 30 | 1857.5 | — 9.88 | ------ | ------ | J. Palliser. | Phil. Trans. Roy. Soc.. 1872. |
| Port San Juan, Vancouver Island. | 48 31 | 124 30 | 1841.5 | —22.50 | —1.61 | - 24.11 | (Chart). | U. S. Exploring Expd. |

*Table of Observed Magnetic Declinations and Values reduced to the Year* 1890—Continued.

BRITISH POSSESSIONS, NORTHWEST TERRITORY, ETC.—Continued.

| Name of station. | φ | λ | t | D | ΔD | $D_{1890.0}$ | Observer. | Reference. |
|---|---|---|---|---|---|---|---|---|
| | ° ′ | ° ′ | | ° | ° | ° | | |
| Rainy Lake. | 48 32 | 92 56 | 1843.5 | —11.47 | ------ | ------- | J. H. Lefroy. | Phil. Trans. Roy. Soc., 1872. |
| Perch Lake. | 48 35 | 91 12 | 1857.5 | — 8.23 | ------ | ------- | J. Palliser. | Phil. Trans. Roy. Soc., 1872. |
| Two River Portage. | 48 35 | 91 27 | 1843.5 | —11.00 | ------ | ------- | J. H. Lefroy. | Phil. Trans. Roy. Soc., 1872. |
| Fort Frances. | 48 37 | 93 29 | 1857.5 | — 9.52 | ------ | ------- | J. Palliser. | Phil. Trans. Roy. Soc., 1872. |
| Entrance, Strait of Juan de Fuca. | 48 37 | 124 54 | 1788.63 | —19.23 | —5.04 | —24.27 | C. Duncan. | Dalrymple's Charts. |
| Rainy River. | 48 48 | 94 31 | 1843.5 | —13.12 | ------ | ------- | J. H. Lefroy. | Phil. Trans. Roy. Soc., 1872. |
| Halting Lake. | 48 50 | 93 58 | 1857.5 | —11.33 | ------ | ------- | J. Palliser. | Phil. Trans. Roy. Soc., 1872. |
| Savannah Portage. | 48 53 | 90 08 | 1857.5 | — 6.88 | ------ | ------- | J. Palliser. | Phil. Trans. Roy. Soc., 1872, |
| Wigwam River Station. | 49 00 | 114 45 | 1861.5 | —23.87 | —0.09 | —23.96 | R. W. Haig. | Phil. Trans. Roy. Soc., 1864. |
| Inshwointum. | 49 00 | 118 28 | 1860.5 | —20.28 | —0.13 | —20.41 | R. W. Haig. | Phil. Trans. Roy. Soc., 1864. |
| Osoyoos Station. | 49 00 | 119 24 | 1860.5 | —22.23 | —0.13 | —22.36 | R. W. Haig. | Phil. Trans. Roy. Soc., 1864. |
| Ashtnolou Station. | 49 00 | 120 00 | 1860.5 | —22.73 | —0.13 | —22.86 | R. W. Haig. | Phil. Trans. Roy. Soc., 1864. |
| Onchucklin Harbor. | 49 00 | 125 00 | 1861.5 | —24.22 | —0.09 | —24.31 | —— Richards. | Phil. Trans. Roy. Soc., 1872. |
| Akamina Station. | 49 01 | 114 04 | 1861.5 | —23.20 | —0.09 | —23.29 | R. W. Haig. | Phil. Trans. Roy. Soc., 1864. |
| Magnetic Station. | 49 01 | 121 45 | 1860.0 | —22.92 | —0.13 | —23.05 | J. S. Harris. | NW. Bound. Comm. Map. |
| Sumas Prairie. | 49 01 | 122 12 | 1858.5 | —21.50 | —0.20 | —21.70 | R. W. Haig. | Phil. Trans. Roy. Soc., 1864. |
| Schweltza Lake. | 49 02 | 122 00 | 1859.5 | —21.62 | —0.16 | —21.78 | R. W. Haig. | Phil. Trans. Roy. Soc., 1864. |
| Magnetic Station. | 49 03 | 120 55 | 1860.0 | —24.32 | —0.14 | —24.46 | J. S. Harris. | NW. Bound. Comm. Map. |
| Magnetic Station. | 49 05 | 121 07 | 1860.0 | —22.38 | —0.14 | —22.52 | J. S. Harris. | NW. Bound. Comm. Map. |
| Northwest Territory Station. | 49 06 | 113 50 | 1879.2 | —23.37 | +0.14 | —23.23 | J. C. Nelson. | MS. of G. M. Dawson, 1882. |
| Garry Point, Frazer River. | 49 07 | 123 11 | 1864.5 | —22.97 | —0.03 | —23.00 | —— Pender. | Phil. Trans. Roy. Soc., 1872. |
| On Ashtnolou River. | 49 08 | 120 00 | 1860.5 | —22.00 | —0.13 | —22.13 | R. W. Haig. | Phil. Trans. Roy. Soc., 1864. |

*Table of Observed Magnetic Declinations and Values reduced to the Year* 1890—Continued.

BRITISH POSSESSIONS, NORTHWEST TERRITORY, ETC.—Continued.

| Name of station. | $\varphi$ | $\lambda$ | $t$ | D | $\Delta$D | $D_{1890.0}$ | Observer. | Reference. |
|---|---|---|---|---|---|---|---|---|
| | ° ′ | ° ′ | | ° | ° | ° | | |
| Nanaimo. | 49 10 | 124 00 | 1862.5 | —22.95 | —0.4 | —23.35 | —— Richards. | Phil. Trans. Roy. Soc., 1872. |
| Ahomet. | 49 12 | 126 12 | 1788.5 | —19.7 | ------ | ------- | C. Duncan. | Dalrymple's Charts. |
| New Westminster. | 49 13 | 122 53 | 1862.5 | —22.67 | —0.4 | —23.07 | —— Richards. | Phil. Trans. Roy. Soc., 1872. |
| Barclay Sound. | 49 14 | 124 50 | 1861.5 | —24.62 | —0.5 | —25.12 | —— Richards. | Phil. Trans. Roy. Soc., 1872. |
| Post Cox or Clioquot. | 49 14 | 128 40 | 1787.5 | —19.5 | ------ | ------- | —— Buckley. | Dalrymple's Charts. |
| Hecate Bay. | 49 15 | 125 56 | 1861.5 | —22.65 | —0.5 | —23.15 | —— Richards. | Phil. Trans. Roy. Soc., 1872. |
| Port Moorly. | 49 19 | 122 50 | 1881.5 | —22.23 | +0.12 | —22.11 | M. Smith. | MS. of G. M. Dawson, 1882. |
| Northwest Territory Station. | 49 20 | 113 40 | 1879.2 | —22.98 | +0.14 | —22.84 | J. C. Nelson. | MS. of G. M. Dawson, 1882. |
| Northwest Territory Station. | 49 25 | 113 40 | 1879.2 | —22.97 | +0.14 | —22.83 | J. C. Nelson. | MS. of G. M. Dawson, 1882. |
| Halting Place. | 49 26 | 94 48 | 1857.5 | —10.28 | ------ | ------- | J. Palliser. | Phil. Trans. Roy. Soc., 1872. |
| Lake of the Woods. | 49 28 | 94 42 | 1843.5 | —12.88 | ------ | ------- | J. H. Lefroy. | Phil. Trans. Roy. Soc., 1872. |
| Northwest Territory Station. | 49 30 | 113 22 | 1879.2 | —22.60 | —0.14 | —22.46 | J. C. Nelson. | MS. of G. M. Dawson, 1882. |
| Magnetic Station. | 49 32 | 115 35 | 1860.0 | —23.57 | —0.15 | —23.72 | J. S. Harris. | NW. Bound. Comm. Map. |
| Town of Yale. | 49 34 | 121 25 | 1871.5 | —24.00 | +0.10 | —23.90 | J. Trutch. | MS. of G. M. Dawson, 1882. |
| Station S, the Gap. | 49 38 | 109 51 | 1880.58 | —21.73 | +0.31 | —21.42 | W. H. King. | MS. of G. M. Dawson, 1882. |
| Station U. | 49 39 | 112 18 | 1880.60 | —22.54 | +0.31 | —22.23 | W. H. King. | MS. of G. M. Dawson, 1882. |
| Station T. | 49 40 | 111 38 | 1880.60 | —21.86 | +0.31 | —21.55 | W. H. King. | MS. of G. M. Dawson, 1882. |
| Head of Howe Sound. | 49 42 | 123 09 | 1873.5 | —23.90 | +0.12 | —23.78 | C. H. Gamsby. | MS. of G. M. Dawson, 1882. |
| Northwest Territory Station. | 49 43 | 112 50 | 1879.1 | —22.47 | +0.27 | —22.20 | J. C. Nelson. | MS. of G. M. Dawson, 1882. |
| Station V, at Willow Creek. | 49 45 | 113 24 | 1880.63 | —22.64 | +0.24 | —22.40 | W. H. King. | MS. of G. M. Dawson, 1882. |
| Upper Fort Garry. | 49 53 | 97 02 | 1843.5 | —16.00 | ------ | ------- | J. H. Lefroy. | Phil. Trans. Roy. Soc., 1872. |
| Northwest Territory Station. | 49 53 | 112 30 | 1879.1 | —22.77 | +0.27 | —22.50 | J. C. Nelson. | MS. of G. M. Dawson, 1882. |
| Northwest Territory Station. | 49 55 | 111 40 | 1879.1 | —22.40 | +0.27 | —22.13 | J. C. Nelson. | MS. of G. M. Dawson, 1882. |

*Table of Observed Magnetic Declinations and Values reduced to the Year* 1890—Continued.

BRITISH POSSESSIONS, NORTHWEST TERRITORY, ETC.—Continued.

| Name of station. | $\varphi$ | $\lambda$ | $t$ | D | $\Delta$D | $D_{1890.0}$ | Observer. | Reference. |
|---|---|---|---|---|---|---|---|---|
| | ° ′ | ° ′ | | ° | ° | ° | | |
| Station R, at Maple Creek. | 50 03 | 108 51 | 1880.56 | —22.00 | +0.31 | —21.69 | W. H. King. | MS. of G. M. Dawson, 1882. |
| Squirrel Cove. | 50 08 | 124 57 | 1864.5 | —23.93 | —0.7 | —24.63 | —— Pender. | Phil. Trans. Roy. Soc., 1872. |
| Winnipeg River. | 50 10 | 95 09 | 1844.0 | —11.92 | ------ | ------- | J. H. Lefroy. | Phil. Trans. Roy. Soc., 1872. |
| Pinaway Portage. | 50 12 | 96 03 | 1843.5 | —12.80 | ------ | ------- | J. H. Lefroy. | Phil. Trans. Roy. Soc., 1872. |
| Northwest Territory Station. | 50 12 | 110 30 | 1878.7 | —21.92 | +0.28 | —21.64 | J. C. Nelson. | MS. of G. M. Dawson, 1882. |
| Mouth of Thompson River. | 50 13 | 121 36 | 1871.5 | —25.00 | +0.1 | —24.90 | J. Trutch. | MS. of G. M. Dawson, 1882. |
| Port Brooks. | 50 18 | 128 13 | 1787.5 | —22.5 | ------ | ------- | J. Johnstone. | Dalrymple's Charts. |
| Station W. | 50 22 | 113 49 | 1880.64 | —22.05 | +0.24 | —21.81 | W. H. King. | MS. of G. M. Dawson, 1882. |
| Station Q, Reed Lake. | 50 27 | 107 22 | 1880.55 | —21.58 | +0.31 | —21.27 | W. H. King. | MS. of G. M. Dawson, 1882. |
| Thompson River, mouth of Nicola. | 50 27 | 121 22 | 1871.5 | —25.50 | +0.1 | —25.40 | J. Trutch. | MS. of G. M. Dawson, 1882. |
| Lake Winnipeg. | 50 28 | 96 35 | 1857.5 | —14.42 | ------ | ------- | J. Palliser. | Phil. Trans. Roy. Soc., 1872. |
| Station P. | 50 29 | 106 47 | 1880.55 | —21.31 | +0.40 | —20.91 | W. H. King. | MS. of G. M. Dawson, 1882. |
| Northwest Territory Station. | 50 30 | 110 20 | 1878.7 | —23.23(?) | +0.24 | —22.99(?) | J. C. Nelson. | MS. of G. M. Dawson, 1882. |
| Fort Alexander. | 50 37 | 96 21 | 1844.0 | —14.23 | ------ | ------- | J. H. Lefroy. | Phil. Trans. Roy. Soc., 1872. |
| Thompson River. | 50 41 | 120 12 | 1871.5 | —24.00 | +0.1 | —23.90 | J. Trutch. | MS. of G. M. Dawson, 1882. |
| Station A. | 50 42 | 102 00 | 1880.39 | —18.84 | +0.5 | —18.34 | W. H. King. | MS. of G. M. Dawson, 1882. |
| Thompson River, near Kamloops. | 50 42 | 120 30 | 1877.5 | —24.25 | +0.1 | —24.15 | C. E. Perry. | MS. of G. M. Dawson, 1882. |
| Beaver Harbor. | 50 43 | 127 25 | 1866.5 | —24.50 | —0.6 | —25.10 | —— Pender. | Phil. Trans. Roy. Soc., 1872. |
| Station M. | 50 44 | 105 14 | 1880.53 | —20.36 | +0.4 | —19.96 | W. H. King. | MS. of G. M. Dawson, 1882. |
| Station B. | 50 45 | 101 31 | 1880.42 | —17.18 | +0.5 | —16.68 | W. H. King. | MS. of G. M. Dawson, 1882. |
| Station K, near Fort on Appelle. | 50 46 | 103 48 | 1880.51 | —19.58 | +0.5 | —19.08 | W. H. King. | MS. of G. M. Dawson, 1882. |
| Thompson River. | 50 46 | 121 05 | 1871.5 | —23.50 | +0.1 | —23.40 | J. Trutch. | MS. of G. M. Dawson, 1882. |
| Station N. | 50 47 | 105 51 | 1880.54 | —20.60 | +0.4 | —20.20 | W. H. King. | MS. of G. M. Dawson, 1882. |

*Table of Observed Magnetic Declinations and Values reduced to the Year* 1890—Continued.

BRITISH POSSESSIONS, NORTHWEST TERRITORY, ETC.—Continued.

| Name of station. | φ | λ | t | D | ΔD | $D_{1890.0}$ | Observer. | Reference. |
|---|---|---|---|---|---|---|---|---|
| | ° ′ | ° ′ | | ° | ° | ° | | |
| Mouth of Hut Creek. | 50 47 | 121 33 | 1873.5 | —27.00 | +0.1 | —26.90 | E. W. Jarvis. | MS. of G. M. Dawson, 1882. |
| Northwest Territory Station. | 50 48 | 113 18 | 1879.9 | —23.00 | +0.2 | —22.80 | J. C. Nelson. | MS. of G. M. Dawson, 1882. |
| Station L. | 50 49 | 104 16 | 1880.53 | —19.18 | +0.4 | —18.78 | W. H. King. | MS. of G. M. Dawson, 1882. |
| On Little Shushwap. | 50 50 | 119 46 | 1871.5 | —24.50 | +0.1 | —24.40 | J. Trutch. | MS. of G. M. Dawson, 1882. |
| Tracey Harbor. | 50 51 | 126 53 | 1863.5 | —26.67 | —0.75 | —27.42 | —— Pender. | Phil. Trans. Roy. Soc., 1872. |
| Northwest Territory Station. | 50 52 | 114 00 | 1879.8 | —24.32 | +0.2 | —24.12 | J. C. Nelson. | MS. of G. M. Dawson, 1882. |
| Magnetic Station. | 50 55 | 107 29 | 1860.0 | —24.52 | ------ | ------ | J. Palliser. | MS. of N.W. Bound. Comm. |
| Northwest Territory Station. | 50 56 | 114 10 | 1879.9 | —24.50 | +0.2 | —24.30 | J. C. Nelson. | MS. of G. M. Dawson, 1882. |
| North Thompson River. | 50 57 | 120 28 | 1871.5 | —23.88 | +0.1 | —23.78 | J. Trutch. | MS. of G. M. Dawson, 1882. |
| Land Survey Station. | 50 58 | 110 40 | 1882.59 | —22.62 | +0.25 | —22.37 | W. Ogilvie. | MS. of E. Deville, 1885. |

BRITISH POSSESSIONS, NORTHWEST TERRITORY, NORTH OF LATITUDE 51° AND WEST OF LONGITUDE 90° W.

Group 1.

| | | | | | | | | |
|---|---|---|---|---|---|---|---|---|
| Port McLaughlin. | 52 08 | 128 10 | 1881.60 | —26.72 | 0.0 | —26.72 | H. E. Nichols. | C. and G. S. Rep., 1881, App. 9. |
| Rose Harbor, Queen Charlotte's Island. | 52 09 | 131 15 | 1881.72 | —26.01 | 0.0 | —26.01 | H. E. Nichols. | C. and G. S. Rep., 1881, App. 9. |
| Port Simpson. | 54 34 | 130 26 | 1885.40 | —28.06 | +0.1 | —27.96 | R. A. Marr (R. Clover). | MS. in C. and G. S. Office. |

Group 2.

| | | | | | | | | |
|---|---|---|---|---|---|---|---|---|
| Station X. | 51 02 | 114 00 | 1880.69 | —24.22 | +0.16 | —24.06 | W. H. King. | MS. of G. M. Dawson, 1882. |
| Land Survey Station. | 51 03 | 112 14 | 1882.63 | —23.32 | +0.2 | —23.12 | W. Ogilvie. | MS. of E. Deville, 1885. |
| Lake Winnipeg. | 51 04 | 96 45 | 1843.5 | —14.23 | ------ | ------ | J. H. Lefroy. | Phil. Trans. Roy. Soc., 1872. |
| Station O. | 51 05 | 106 37 | 1880.54 | —21.31 | +0.15 | —21.16 | W. H. King. | MS. of G. M. Dawson, 1882. |
| Northwest Territory Station. | 51 05 | 115 00 | 1879.6 | —23.97 | +0.17 | —23.80 | J. C. Nelson. | MS. of G. M. Dawson, 1882. |
| Treadmill Harbor. | 51 06 | 127 34 | 1864.5 | —24.13 | ------ | ------ | —— Pender. | Phil. Trans. Roy. Soc., 1872. |

*Table of Observed Magnetic Declinations and Values reduced to the Year* 1890—Continued.

BRITISH POSSESSIONS, NORTHWEST TERRITORY, ETC.—Continued.

| Name of station. | $\varphi$ | $\lambda$ | $t$ | D | $\Delta$D | $D_{1890.0}$ | Observer. | Reference. |
|---|---|---|---|---|---|---|---|---|
| | ° ′ | ° ′ | | ° | ° | ° | | |
| Station J. | 51 12 | 103 54 | 1880.50 | —19.83 | ------ | ------ | W. H. King. | MS. of G. M. Dawson, 1882. |
| North Thompson River. | 51 12 | 120 22 | 1871.5 | —24.12 | +0.3 | —23.82 | J. Trutch. | MS. of G. M. Dawson, 1882. |
| Station I. | 51 22 | 104 00 | 1880.49 | —18.56 | ------ | ------ | W. H. King. | MS. of G. M. Dawson, 1882. |
| North Thompson River. | 51 28 | 120 25 | 1873.5 | —25.33 | +0.3 | —25.03 | E. W. Jarvis. | MS. of G. M. Dawson, 1882. |
| Station H, on Pelly Trail. | 51 32 | 103 43 | 1880.48 | —19.87 | ------ | ------ | W. H. King. | MS. of G. M. Dawson, 1882. |
| Safety Cove. | 51 32 | 127 57 | 1864.5 | —23.63 | ------ | ------ | —— Pender. | Phil. Trans. Roy. Soc., 1872. |
| North Thompson River. | 51 33 | 120 17 | 1871.5 | —25.50 | +0.3 | —25.20 | J. Trutch. | MS. of G. M. Dawson, 1882. |
| Lake Winnipeg. | 51 36 | 96 42 | 1844.0 | —15.70 | ------ | ------ | J. H. Lefroy. | Phil. Trans. Roy. Soc., 1872. |
| Station G. | 51 39 | 103 08 | 1880.47 | —19.56 | ------ | ------ | W. H. King. | MS. of G. M. Dawson, 1882. |
| Safety Port. | 51 41 | 128 31 | 1788.5 | —21.5 | ------ | ------ | C. Duncan. | Dalrymple's Charts. |
| Station F. | 51 42 | 103 04 | 1880.47 | —19.64 | ------ | ------ | W. H. King. | MS. of G. M. Dawson, 1882. |
| Station E. | 51 44 | 102 29 | 1880.46 | —18.93 | ------ | ------ | W. H. King. | MS. of G. M. Dawson, 1882. |
| Lake Winnipeg. | 51 45 | 96 53 | 1843.5 | —15.95 | ------ | ------ | J. H. Lefroy. | Phil. Trans. Roy. Soc., 1872. |
| Station D, Assiniboine River. | 51 45 | 102 01 | 1880.46 | —20.21 | ------ | ------ | W. H. King. | MS. of G. M. Dawson, 1882. |
| Fort Pelly. | 51 45 | 102 05 | 1836.9 | —17.00 | ------ | ------ | Th. Simpson. | Narr. of Discovery, 1843. |
| Station Z. | 51 52 | 114 00 | 1880.72 | —24.26 | +0.16 | —24.10 | W. H. King. | MS. of G. M. Dawson, 1882. |
| Station C, Swan River Bar. | 51 54 | 101 57 | 1880.44 | —19.62 | ------ | ------ | W. H. King. | MS. of G. M. Dawson, 1882. |
| Rose Harbor. | 52 09 | 131 20 | 1787 | —23.0 | ------ | ------ | J. Johnstone. | Dalrymple's Charts. |
| Clearwater River. | 52 12 | 120 12 | 1873.5 | —24.50 | ------ | ------ | E. W. Jarvis. | MS. of G. M. Dawson, 1882. |
| Kynumft Harbor. | 52 12 | 128 12 | 1866.5 | —26.17 | ------ | ------ | —— Pender. | Phil. Trans. Roy. Soc., 1872. |
| Milbank's Sound, Cove. | 52 14 | 129 00 | 1788.5 | —23.0 | ------ | ------ | C. Duncan. | Dalrymple's Charts. |
| Lake Winnipeg. | 52 15 | 97 07 | 1843.5 | —15.62 | ------ | ------ | J. H. Lefroy. | Phil. Trans. Roy. Soc., 1872. |
| Saskatchewan River. | 52 23 | 107 04 | 1844.5 | —25.35 | ------ | ------ | J. H. Lefroy. | Phil. Trans. Roy. Soc., 1872. |

*Table of Observed Magnetic Declinations and Values reduced to the Year* 1890—Continued.

BRITISH POSSESSIONS, NORTHWEST TERRITORY, ETC.—Continued.

| Name of station. | φ | λ | t | D | ΔD | $D_{1890.0}$ | Observer. | Reference. |
|---|---|---|---|---|---|---|---|---|
| | ° ′ | ° ′ | | ° | ° | ° | | |
| N. Bentinck Arm. | 52 23 | 126 48 | 1864.5 | —24.77 | ------ | ------ | —— Pender. | Phil. Trans. Roy. Soc., 1872. |
| Etches Sound. | 52 25 | 131 48 | 1788.5 | —23.5 | ------ | ------ | C. Duncan. | Dalrymple's Charts. |
| Carter Bay, Brit. Col. | 52 50 | 128 25 | 1866.5 | —25.98 | ------ | ------ | —— Pender. | Phil. Trans. Roy. Soc., 1872. |
| Carlton House. | 52 51 | 106 32* | 1844.5 | —22.92 | ------ | ------ | J. H. Lefroy. | Phil. Trans. Roy. Soc., 1872. |
| Head of Dean Inlet. | 52 52 | 127 13 | 1876.5 | —27.00 | ------ | ------ | W. S. Jennings. | MS. of G. M. Dawson, 1882. |
| Tete Jeanne Cache. | 52 58 | 119 50 | 1876.5 | —26.33 | +0.5 | —25.83 | G. A. Keefer. | MS. of G. M. Dawson, 1882. |
| Station a, Pipestone Creek. | 53 04 | 113 35 | 1880.73 | —25.24 | +0.2 | —25.04 | W. H. King. | MS. of G. M. Dawson, 1882. |
| Grand Rapids, Saskatchewan. | 53 08 | 99 27 | 1884.55 | —15.63 | ------ | ------ | O. J. Klotz. | MS. of E. Deville, 1885. |
| Saskatchewan, *a*. | 53 10 | 104 50 | 1884.39 | —21.9† | ------ | ------ | O. J. Klotz. | MS. of E. Deville, 1885. |
| Grand Rapids, *ε*. | 53 12 | 99 30 | 1884.54 | —15.3† | ------ | ------ | O. J. Klotz. | MS. of E. Deville, 1885. |
| Grand Rapids, j. | 53 12 | 99 33 | 1884.54 | —16.97† | ------ | ------ | O. J. Klotz. | MS. of E. Deville, 1885, |
| Calamity Harbor. | 53 12 | 130 24 | 1787.5 | —23.33 | ------ | ------ | J. Johnstone. | Dalrymple's Charts. |
| Anchor Cove, Brit. Col. | 53 12 | 132 14 | 1866.5 | —24.98 | ------ | ------ | —— Pender. | Phil. Trans. Roy. Soc., 1872. |
| Hudson Bay Co. Post. | 53 13 | 99 29 | 1884.54 | —15.7† | ------ | ------ | O. J. Klotz. | MS. of E. Deville, 1885. |
| Near Fort à la Corne. | 53 13 | 104 52 | 1884.39 | —21.83 | ------ | ------ | O. J. Klotz. | MS. of E. Deville, 1885. |
| Forks of Saskatchewan. | 53 14 | 105 05 | 1884.38 | —21.4† | ------ | ------ | O. J. Klotz. | MS. of E. Deville, 1885. |
| Head of Gardner Inlet. | 53 15 | 127 37 | 1875.5 | —26.50 | ------ | ------ | C. Horetzky and C. H. Gamsby. | MS. of G. M. Dawson, 1882. |
| Saskatchewan, b. | 53 16 | 100 01 | 1884.53 | —18.0† | ------ | ------ | O. J. Klotz. | MS. of E. Deville, 1885. |
| Jasper House. | 53 16 | 118 10 | 1871.5 | —26.00 | ------ | ------ | W. Moberly. | MS. of G. M. Dawson, 1882. |
| Saskatchewan, Chemahawin. | 53 20 | 100 32 | 1884.51 | —17.7† | ------ | ------ | O. J. Klotz. | MS. of E. Deville, 1885. |
| Saskatchewan Y. | 53 21 | 104 02 | 1884.43 | —18.6† | ------ | ------ | O. J. Klotz. | MS. of E. Deville, 1885. |
| North Saskatchewan River. | 53 23 | 114 19 | 1876.5 | —26.50 | ------ | ------ | H. N. Ruttau. | MS. of G. M. Dawson, 1882. |
| Port Stepteen. | 53 30 | 130 12 | 1788.5 | —24.2 | ------ | ------ | C. Duncan. | Dalrymple's Charts. |

* Corrected. † Roughly corrected for diurnal variation.

*Table of Observed Magnetic Declinations and Values reduced to the Year* 1890—Continued.

BRITISH POSSESSIONS, NORTHWEST TERRITORY, ETC.—Continued.

| Name of station. | $\varphi$ | $\lambda$ | $t$ | D | $\Delta$D | $D_{1890.0}$ | Observer. | Reference. |
|---|---|---|---|---|---|---|---|---|
| | ° ′ | ° ′ | | ° | ° | ° | | |
| Saskatchewan L. | 53 31 | 103 49 | 1884.43 | −18.7* | ------ | ------ | O. J. Klotz. | MS. of E. Deville, 1885. |
| Station b in valley, near Edmonton. | 53 32 | 113 30(?) | 1880.76 | −26.72 | +0.2 | −26.52 | W. H. King. | MS. of G. M. Dawson, 1882. |
| Station d on 14th base line. | 53 36 | 111 24 | 1880.79 | −25.77 | ------ | ------ | W. H. King. | MS. of G. M. Dawson, 1882. |
| Saskatchewan, a. | 53 38 | 103 42 | 1884.44 | −20.3* | ------ | ------ | O. J. Klotz. | MS. of E. Deville, 1885. |
| Saskatchewan, h. | 53 40 | 103 28 | 1884.44 | −20.3* | ------ | ------ | O. J. Klotz. | MS. of E. Deville, 1885. |
| Nelson River, Warren's Landing. | 53 43 | 98 05 | 1884.55 | −15.9* | ------ | ------ | O. J. Klotz. | MS. of E. Deville, 1885. |
| Saskatchewan, N. | 53 47 | 101 07 | 1884.49 | −18.7* | ------ | ------ | O. J. Klotz. | MS. of E. Deville, 1885. |
| Mouth of Chilaccoh River. | 53 50 | 123 00 | 1875.5 | −28.25 | ------ | ------ | H. P. Bell. | MS. of G. M. Dawson, 1882. |
| Saskatchewan ξ. | 53 52 | 103 01 | 1884.44 | −20.9* | ------ | ------ | O. J. Klotz. | MS. of E. Deville, 1885. |
| Alpha Bay, Brit. Col. | 53 52 | 130 18 | 1866.5 | −26.57 | ------ | ------ | —— Pender. | Phil. Trans. Roy. Soc., 1872. |
| Cumberland House. | 53 57 | 102 19 | 1884.46 | −20.2* | ------ | ------ | O. J. Klotz. | MS. of E. Deville, 1885. |
| Norway House. | 54 00 | 98 03 | 1884.65 | −15.0* | ------ | ------ | O. J. Klotz. | MS. of E. Deville, 1885. |
| Saskatchewan, j. | 54 02 | 101 35 | 1884.47 | −19.4 | ------ | ------ | O. J. Klotz. | MS. of E. Deville, 1885. |
| Land Survey Station. | 54 02 | 114 00 | 1882.91 | −26.61 | ------ | ------ | W. Ogilvie. | MS. of E. Deville, 1885. |
| Nelson River, i. | 54 06 | 97 56 | 1884.57 | −16.6 | ------ | ------ | O. J. Klotz. | MS. of E. Deville, 1885. |
| Skeaux River or Port Essington. | 54 14 | 129 47 | 1879.5 | −27.33 | +0.25 | −27.08 | G. A. Keefer. | MS. of G. M. Dawson, 1882. |
| Nelson River, x. | 54 15 | 97 49 | 1884.57 | −17.6* | ------ | ------ | O. J. Klotz. | MS. of E. Deville, 1885. |
| Nelson River, j. | 54 17 | 97 46 | 1884.57 | −16.3* | ------ | ------ | O. J. Klotz. | MS. of E. Deville, 1885. |
| Head of Work Inlet. | 54 18 | 129 43 | 1879.5 | −27.50 | +0.25 | −27.25 | G. A. Keefer. | MS. of G. M. Dawson, 1882. |
| Twenty Miles up Skeena River. | 54 19 | 129 19 | 1879.5 | −27.33 | +0.25 | −27.08 | G. A. Keefer. | MS. of G. M. Dawson, 1882. |
| Fort Assiniboine. | 54 20 | 114 28 | 1844.5 | −24.65 | ------ | ------ | J. H. Lefroy. | Phil. Trans. Roy. Soc., 1872. |
| Nelson River, ρ. | 54 21 | 97 49 | 1884.57 | −16.7* | ------ | ------ | O. J. Klotz. | MS. of E. Deville, 1885. |

* Roughly corrected for diurnal variation.

*Table of Observed Magnetic Declinations and Values reduced to the Year* 1890—Continued.

BRITISH POSSESSIONS, NORTHWEST TERRITORY, ETC.—Continued.

| Name of station. | $\varphi$ | $\lambda$ | $t$ | D | $\Delta$D | $D_{1890.0}$ | Observer. | Reference. |
|---|---|---|---|---|---|---|---|---|
| | ° ′ | ° ′ | | ° | ° | ° | | |
| Nelson River, $\chi$. | 54 22 | 97 51 | 1884.57 | —18.2* | ------ | ------ | O. J. Klotz. | MS. of E. Deville, 1885. |
| Thirty-one miles up Skeena River. | 54 22 | 129 00 | 1879.5 | —26.75 | +0.25 | —26.50 | G. A. Keefer. | MS. of G. M. Dawson, 1882. |
| Nelson River, p. | 54 25 | 97 53 | 1884.57 | —15.6* | ------ | ------ | O. J. Klotz. | MS. of E. Deville, 1885. |
| Fifty miles up Skeena River. | 54 30 | 128 35 | 1879.5 | —26.50 | +0.25 | —26.25 | G. A. Keefer. | MS. of G. M. Dawson, 1882. |
| Nelson River, k. | 54 31 | 97 52 | 1884.58 | —14.9* | ------ | ------ | O. J. Klotz. | MS. of E. Deville, 1885. |
| Nelson River, d. | 54 43 | 97 59 | 1884.58 | —12.9* | ------ | ------ | O. J. Klotz. | MS. of E. Deville, 1885. |
| Nelson River, o. | 54 45 | 98 06 | 1884.58 | —15.4* | ------ | ------ | O. J. Klotz. | MS. of E. Deville, 1885. |
| Nelson River, $\delta$. | 54 49 | 98 14 | 1884.59 | —20.5* | ------ | ------ | O. J. Klotz. | MS. of E. Deville, 1885. |
| Nelson River, $\upsilon$ and $\varphi$. | 54 55 | 98 09 | 1884.59 | —20.1* | ------ | ------ | O. J. Klotz. | MS. of E. Deville, 1885. |
| Nelson River, $\theta$. | 55 00 | 98 00 | 1884.59 | —15.8 | ------ | ------ | O. J. Klotz. | MS. of E. Deville, 1885. |
| Fort McLeod. | 55 00 | 123 11 | 1875.5 | —25.33 | ------ | ------ | A. Webster. | MS. of G. M. Dawson, 1882. |
| Nelson River, N. | 55 06 | 97 43 | 1884.59 | —21.3* | ------ | ------ | O. J. Klotz. | MS. of E. Deville, 1885. |
| Land Survey Station. | 55 10 | 114 04 | 1883.35 | —27.76 | ------ | ------ | W. Ogilvie. | MS. of E. Deville, 1885. |
| Nelson River, $\tau$. | 55 13 | 97 18 | 1884.60 | —17.4* | ------ | ------ | O. J. Klotz. | MS. of E. Deville, 1885. |
| Nelson River, h. | 55 19 | 97 08 | 1884.60 | —15.2* | ------ | ------ | O. J. Klotz. | MS. of E. Deville, 1885. |
| Nelson River, w. | 55 27 | 97 00 | 1884.61 | —12.5* | ------ | ------ | O. J. Klotz. | MS. of E. Deville, 1885. |
| Nelson River, i. | 55 41 | 96 55 | 1884.61 | —14.3* | ------ | ------ | O. J. Klotz. | MS. of E. Deville, 1885. |
| Forks of Pine River. | 55 44 | 121 18 | 1875.5 | —28.83 | ------ | ------ | A. Webster. | MS. of G. M. Dawson, 1882. |
| Nelson River, f. | 55 54 | 96 47 | 1884.62 | —18.0* | ------ | ------ | O. J. Klotz. | MS. of E. Deville, 1885. |
| Camp on Pearl River. | 55 58 | 123 13 | 1875.5 | —30.17 | ------ | ------ | A. Webster. | MS. of G. M. Dawson, 1882. |
| Hudson's Hope. | 56 02 | 121 58 | 1875.5 | —26.03 | ------ | ------ | A. Webster. | MS. of G. M. Dawson, 1882. |
| Head of Rocky Mountain Portage. | 56 03 | 122 15 | 1875.5 | —28.13 | ------ | ------ | A. Webster. | MS. of G. M. Dawson, 1882. |

*Roughly corrected for diurnal variation.

*Table of Observed Magnetic Declinations and Values reduced to the Year* 1890—Continued.

BRITISH POSSESSIONS, NORTHWEST TERRITORY, ETC.—Continued.

| Name of station. | $\varphi$ | $\lambda$ | $t$ | D | $\Delta$D | $D_{1890.0}$ | Observer. | Reference. |
|---|---|---|---|---|---|---|---|---|
| | ° ′ | ° ′ | | ° | ° | ° | | |
| Nelson River, R. | 56 04 | 96 47 | 1884.62 | —16.9* | ------ | ------ | O. J. Klotz. | MS. of E. Deville, 1885. |
| Land Survey Station. | 56 10 | 117 47 | 1883.72 | —30.17 | ------ | ------ | W. Ogilvie. | MS. of E. Deville, 1885. |
| Nelson River, E. | 56 11 | 96 26 | 1884.62 | —14.1* | ------ | ------ | O. J. Klotz. | MS. of E. Deville, 1885. |
| Fort Saint John. | 56 12 | 121 14 | 1875.5 | —26.00 | ------ | ------ | A. Webster. | MS. of G. M. Dawson, 1882. |
| Nelson River, R. | 56 14 | 96 08 | 1884.63 | —13.2* | ------ | ------ | O. J. Klotz. | MS. of E. Deville, 1885. |
| Nelson River, f. | 56 16 | 95 50 | 1884.63 | —16.6* | ------ | ------ | O. J. Klotz. | MS. of E. Deville, 1885. |
| Nelson River, a. | 56 16 | 96 00 | 1884.63 | —14.4* | ------ | ------ | O. J. Klotz. | MS. of E. Deville, 1885. |
| Nelson River, z. | 56 19 | 95 29 | 1884.64 | —10.1* | ------ | ------ | O. J. Klotz. | MS. of E. Deville, 1885. |
| Nelson River, Z. | 56 21 | 94 46 | 1884.65 | —13.8* | ------ | ------ | O. J. Klotz. | MS. of E. Deville, 1885. |
| Nelson River, V. | 56 21 | 94 53 | 1884.65 | — 9.4* | ------ | ------ | O. J. Klotz. | MS. of E. Deville, 1885. |
| Nelson River, M. | 56 21 | 95 02 | 1884.65 | —12.5* | ------ | ------ | O. J. Klotz. | MS. of E. Deville, 1885. |
| Nelson River, $\varphi$. | 56 21 | 95 13 | 1884.64 | — 9.9* | ------ | ------ | O. J. Klotz. | MS. of E. Deville, 1885. |
| Nelson River, P. | 56 27 | 94 26 | 1884.66 | —10.3* | ------ | ------ | O. J. Klotz. | MS. of E. Deville, 1885. |
| Nelson River, zz. | 56 34 | 94 12 | 1884.66 | —11.4* | ------ | ------ | O. J. Klotz. | MS. of E. Deville, 1885. |
| Nelson River, n. | 56 49 | 93 59 | 1884.66 | — 8.4* | ------ | ------ | O. J. Klotz. | MS. of E. Deville, 1885. |
| Nelson River, f. | 56 54 | 93 05 | 1884.68 | — 7.2* | ------ | ------ | O. J. Klotz. | MS. of E. Deville, 1885. |
| Nelson River, $\psi$. | 56 54 | 93 16 | 1884.68 | — 2.9*(?) | ------ | ------ | O. J. Klotz. | MS. of E. Deville, 1885. |
| Nelson River, N. | 56 59 | 92 54 | 1884.68 | — 7.7* | ------ | ------ | O. J. Klotz. | MS. of E. Deville, 1885. |
| York Factory (S.V.S). | 57 00 | 92 26 | 1884.70 | — 6.66* | ------ | —5.6 | O. J. Klotz. | MS. of E. Deville, 1885. |
| Fort Good Hope. | 66 16 | 128 30 | 1844.5 | —42.77 | ------ | ------ | J. H. Lefroy. | Phil. Trans. Roy. Soc., 1872. |
| Red River. | 67 27 | 133 36 | 1826.5 | —45.62 | ------ | ------ | J. Franklin. | Phil. Trans. Roy. Soc., 1872. |
| Shoalwater Bay. | 68 54 | 136 21 | 1837.52 | —49.37 | ------ | ------ | Th. Simpson. | Narr. of Discovery, 1843. |

* Roughly corrected for diurnal variation.

*Table of Observed Magnetic Declinations and Values reduced to the Year* 1890—Continued.

BRITISH POSSESSIONS, NORTHWEST TERRITORY, ETC.—Continued.

| Name of station. | $\varphi$ | $\lambda$* | $t$ | D | $\Delta$D | $D_{1890.0}$ | Observer. | Reference. |
|---|---|---|---|---|---|---|---|---|
| | ° ′ | ° ′ | | ° | ° | ° | | |
| Richardson Chain. | 69 01 | 137 25 | 1826.5 | —46.68 | ------ | ------ | J. Franklin. | Phil. Trans. Roy. Soc., 1872. |
| Point Kay. | 69 18 | 138 08 | 1837.53 | —49.00 | ------ | ------ | Th. Simpson. | Narr. of Discovery, 1843. |
| Herschel Island. | 69 36 | 139 42 | 1826.5 | —46.22 | ------ | ------ | J. Franklin. | Phil. Trans. Roy. Soc., 1872. |
| Clarence Bay. | 69 38 | 140 51 | 1826.5 | —45.72 | ------ | ------ | J. Franklin. | Phil. Trans. Roy. Soc., 1872. |

WATERS ADJACENT TO ALASKA AND EASTERN SIBERIA.†

| | | | | | | | | |
|---|---|---|---|---|---|---|---|---|
| At sea. | 45 14 | 159 41 | 1850.0 | —18.75 | +1.1 | —17.6 | H. Kellett. | Phil. Trans. Roy. Soc., 1872. |
| At sea. | 45 19 | 160 00 | 1850.0 | —17.77 | +1.1 | —16.7 | H. Kellett. | Phil. Trans. Roy. Soc., 1872. |
| At sea. | 45 33 | E. 161 05 | 1849.5 | — 4.50 | +2.0 | — 2.5 | H. Kellett. | Phil. Trans. Roy. Soc., 1872. |
| At sea. | 47 28 | E. 159 45 | 1849.5 | — 4.00 | +2.0 | — 2.0 | H. Kellett. | Phil. Trans. Roy. Soc., 1872. |
| At sea. | 48 08 | 146 39 | 1827.5 | —22.58 | ------ | ------ | F. P. Lütke. | Phil. Trans. Roy. Soc., 1872. |
| At sea. | 48 34 | E. 164 38 | 1851.5 | — 7.17 | +2.0 | — 5.2 | R. Collinson. | Phil. Trans. Roy. Soc., 1872. |
| At sea. | 48 44 | 143 23 | 1827.5 | —23.02 | ------ | ------ | F. P. Lütke. | Phil. Trans. Roy. Soc., 1872. |
| At sea. | 48 49 | E. 158 13 | 1849.5 | — 4.38 | +2.0 | — 2.4 | H. Kellett. | Phil. Trans. Roy. Soc., 1872. |
| At sea. | 50 05 | E. 158 39 | 1848.5 | — 2.32 | +2.2 | — 0.1 | H. Kellett. | Phil. Trans. Roy. Soc., 1872. |
| At sea. | 50 50 | E. 166 37 | 1850.5 | — 5.90 | +2.0 | — 3.9 | R. Collinson. | Phil. Trans. Roy. Soc., 1872. |
| At sea. | 51 46 | 152 36 | 1830.5 | —24.08 | +2.3 | —21.8 | A. Erman. | Phil. Trans. Roy. Soc., 1872. |
| At sea. | 51 54 | E. 168 38 | 1854.5 | — 8.60 | +1.7 | — 6.9 | R. Collinson. | Phil. Trans. Roy. Soc., 1872. |
| At sea. | 51 55 | 143 33 | 1827.0 | —24.50 | ------ | ------ | F. P. Lütke. | Phil. Trans. Roy. Soc., 1872. |
| At sea. | 53 00 | 149 56 | 1830.5 | —25.55 | ------ | ------ | A. Erman. | Phil. Trans. Roy. Soc., 1872. |
| Petropavlovsk, Siberia (S. V. S.). | 53 01 | E. 158 41 | 1876.57 | — 1.15 | ------ | — 0.68 | M. L. Onatzevich. | Onatzevich's Coll'n of obs's, St. Petersburg, 1878. |
| Natschika, Siberia. | 53 07 | E. 157 25 | 1829.5 | — 4.00 | +3.4 | — 0.6 | A. Erman. | Phil. Trans. Roy. Soc., 1872. |

* A prefixed E indicates East longitudes.

† The subdivisions into groups are omitted as unimportant.

*Table of Observed Magnetic Declinations and Values reduced to the Year* 1890—Continued.

WATERS ADJACENT TO ALASKA AND EASTERN SIBERIA—Continued.

| Name of station. | $\phi$ | $\lambda$* | $t$ | D | $\Delta$D | $D_{1890.0}$ | Observer. | Reference. |
|---|---|---|---|---|---|---|---|---|
| | ° ′ | ° ′ | | ° | ° | ° | | |
| At sea. | 53 36 | 143 38 | 1850.5 | —24.77 | ------ | ------ | R. Collinson. | Phil. Trans. Roy. Soc., 1872. |
| Bering Island. | 55 14 | E. 165 52 | 1879.6 | — 3.93 | +0.4 | — 3.5 | A. Wÿkander (A.E. Nordenskiöld). | Exped. of the "Vega," Stockholm, 1883. |
| At sea. | 57 21 | E. 176 24 | 1854.5 | —12.67 | +2.7 | —10.0 | R. Collinson. | Phil. Trans. Roy. Soc., 1872. |
| At sea. | 58 19 | E. 169 08 | 1849.5 | — 9.68 | +3.6 | — 6.1 | H. Kellett. | Phil. Trans. Roy. Soc., 1872. |
| At sea. | 59 05 | E. 169 49 | 1849.5 | —10.28 | +3.6 | — 6.7 | H. Kellett. | Phil. Trans. Roy. Soc., 1872. |
| At sea. | 59 32 | E. 173 12 | 1849.5 | —10.47 | +3.8 | — 6.7 | R. Collinson. | Phil. Trans. Roy. Soc., 1872. |
| At sea. | 59 38 | E. 171 10 | 1849.5 | —10.90 | +3.6 | — 7.3 | H. Kellett. | Phil. Trans. Roy. Soc., 1872. |
| At sea. | 61 20 | E. 177 23 | 1850.5 | —14.12 | +4.1 | —10.0 | R. Collinson. | Phil. Trans. Roy. Soc., 1872. |
| Plover Bay, Siberia. | 64 22 | 173 22 | 1880.66 | —18.42 | +1.6 | —16.8 | W. H. Dall and M. Baker. | C. and G. S. Rep., 1882. |
| At sea. | 64 47 | 171 35 | 1881.43 | —23.17 | +1.4 | —21.8 | C. L. Hooper. | Cruise of the Corwin; MS. of G. Davidson, 1881. |
| Konyam Bay. | 64 50 | 172 57 | 1879.6 | —17.87 | +1.8 | —16.1 | A. Wÿkander (A.E. Nordenskiöld). | Exped. of the "Vega," Stockholm, 1883. |
| Holy Cross Bay, Siberia. | 65 28 | 178 32 | 1828.5 | —21.07 | +5.6 | —15.5 | F. P. Lütke. | Phil. Trans. Roy. Soc., 1872. |
| Saint Laurence Bay. | 65 35 | 170 44 | 1879.5 | —20.38 | +1.7 | —18.7 | A. Wÿkander (A. E. Nordenskiöld). | Exped. of the "Vega," Stockholm, 1883. |
| At sea, Bering Strait. | 65 35 | 170 45 | 1881.43 | —23.42 | +1.4 | —22.0 | C. L. Hooper. | Cruise of the Corwin; MS. of G. Davidson, 1881. |
| Bay of St. Laurence. | 65 38 | 170 46 | 1828.5 | —24.07 | ------ | ------ | F. P. Lütke. | Phil. Trans. Roy. Soc., 1872. |
| Big Diomede Island, Bering Strait. | 65 45 | 169 04 | 1880.69 | —21.82 | +1.5 | —20.3 | W. H. Dall and M. Baker. | C. and G. S. Rep., 1882. |
| At sea. | 65 47 | 168 55 | 1881.41 | —22.83 | +1.4 | —21.4 | C. L. Hooper. | Cruise of the Corwin; MS. of G. Davidson, 1881. |
| At sea, Bering Strait. | 66 07 | 169 17 | 1881.43 | —23.67 | +1.4 | —22.3 | C. L. Hooper. | Cruise of the Corwin; MS. of G. Davidson, 1881. |

* A prefixed E indicates East longitudes.

*Table of Observed Magnetic Declinations and Values reduced to the Year* 1890—Continued.

WATERS ADJACENT TO ALASKA AND EASTERN SIBERIA—Continued.

| Name of station. | $\varphi$ | $\lambda$ | $t$ | D | $\Delta$D | $D_{1890.0}$ | Observer. | Reference. |
|---|---|---|---|---|---|---|---|---|
| | ° ′ | ° ′ | | ° | ° | ° | | |
| At sea. | 66 16 | 161 46 | 1881.69 | —27.05 | +1.3 | —25.7 | C. L. Hooper. | Cruise of the Corwin; MS. of G. Davidson, 1881. |
| At sea, Arctic Ocean. | 66 42 | 170 46 | 1881.42 | —24.00 | +1.4 | —22.6 | C. L. Hooper. | Cruise of the Corwin; MS. of G. Davidson, 1881. |
| Pitlekai. | 67 05 | 173 30 | 1878.7 | —19.72 | +1.8 | —17.9 | A. Wÿkander, (A. E. Nordenskiöld). | Exped. of the Vega, Stockholm, 1883. |
| At sea, Arctic Ocean. | 67 17 | 171 45 | 1881.41 | —22.50 | +1.5 | —21.0 | C. L. Hooper. | Cruise of the Corwin; MS. of G. Davidson, 1881. |
| Koliuchin Island, Siberia. | 67 27 | 175 35 | 1823.5 | —23.43 | ------ | ------ | F. v. Wrangell. | Phil. Trans. Roy. Soc., 1872. |
| Wankarem River, Siberia. | 67 43 | 176 27 | 1823.5 | —23.0 | ------ | ------ | F. v. Wrangell. | Phil. Trans. Roy. Soc., 1872. |
| At sea, off Koliuchin Bay. | 67 52 | 175 18 | 1881.60 | —19.82 | +1.5 | —18.3 | C. L. Hooper. | Cruise of the Corwin; MS. of G. Davidson, 1881. |
| At sea, off Koliuchin Bay. | 67 58 | 175 14 | 1881.42 | —23.50 | +1.5 | —22.0 | C. L. Hooper. | Ref. same as above. |
| At sea, off Cape Lisburne. | 68 50 | 165 10 | 1881.57 | —32.07 | +1.7 | —30.4 | C. L. Hooper. | Cruise of the Corwin; MS. of G. Davidson, 1881. |
| Irkaipi. | 68 50 | 180 00 | 1878.7 | —17.90 | +1.7 | —16.2 | A. Wÿkander (A. E. Nordenskiöld). | Exped. of the Vega, Stockholm, 1883. |
| North Cape, Siberia. | 68 55 | E. 179 56 | 1823.5 | —21.67 | ------ | ------ | F. v. Wrangell. | Phil. Trans. Roy. Soc., 1872. |
| East of Cape Jakan. | 69 36 | E. 176 58 | 1823.5 | —21.50 | ------ | ------ | F. v. Wrangell. | Phil. Trans. Roy. Soc., 1872. |
| Werkon River, Siberia. | 69 53 | E. 173 32 | 1823.5 | —18.95 | ------ | ------ | F. v. Wrangell. | Phil. Trans. Roy. Soc., 1872. |
| At sea, Arctic Ocean. | 69 58 | 162 38 | 1881.57 | —31.92 | +1.8 | —30.1 | C. L. Hooper. | Cruise of the Corwin; MS. of G. Davidson, 1881. |
| Kosmin Rock. | 70 01 | E. 171 55 | 1823.5 | —18.00 | ------ | ------ | F. v. Wrangell. | Phil. Trans. Roy. Soc., 1872. |
| Cape Schelagskoi. | 70 03 | E. 171 03 | 1823.5 | —18.05 | ------ | ------ | F. v. Wrangell. | Phil. Trans. Roy. Soc., 1872. |
| At sea, off Icy Cape. | 70 05 | 162 06 | 1881.56 | —32.23 | +1.8 | —30.4 | C. L. Hooper. | Cruise of the Corwin; MS. of G. Davidson, 1881. |
| At sea, off Icy Cape. | 70 15 | 161 55 | 1881.55 | —32.20 | +1.8 | —30.4 | C. L. Hooper. | |

*Table of Observed Magnetic Declinations and Values reduced to the Year* 1890—Continued.

WATERS ADJACENT TO ALASKA AND EASTERN SIBERIA—Continued.

| Name of station. | φ | λ | t | D | ΔD | $D_{1890.0}$ | Observer. | Reference. |
|---|---|---|---|---|---|---|---|---|
| | ° ′ | ° ′ | | ° | ° | ° | | |
| Magnetic Station, Siberia. | 70 20 | E. 174 13 | 1823.5 | —21.50 | ------ | ------ | F. v. Wrangell. | Phil. Trans. Roy. Soc., 1872. |
| At sea, off Herald Island. | 70 49 | 174 32 | 1881.58 | —24.78 | +1.6 | —23.2 | C. L. Hooper. | Cruise of the Corwin; MS. of G. Davidson, 1881. |
| At sea, off Herald Island. | 70 51 | 175 40 | 1881.58 | —23.43 | +1.6 | —21.8 | C. L. Hooper. | |
| Wrangell Island, south coast, Rodgers Hbr. | 70 57 | 178 10 | 1881.65 | —19.92 | +1.6 | —18.3 | R. M. Berry and —— Putnam. | U. S. Hyd. Office and Rep. by Gilder. |
| Wrangell Island, east coast. | 71 04 | 177 40 | 1881.61 | —23.43 | +1.6 | —21.8 | C. L. Hooper. | Cruise of the Corwin; MS. of G. Davidson, 1881. |
| Off Point Barrow. | 71 20 | 156 15 | 1881.63 | —37.30 | +2.1 | —35.2 | C. L. Hooper. | |
| On the ice, Arctic Ocean. | 71 34 | 162 00 | 1849.57 | —37.00 | ------ | ------ | H. Kellett. | From a chart. |
| On the ice, Arctic Ocean. | 72 50 | 164 40 | 1849.56 | —42.15 | ------ | ------ | H. Kellett. | From a chart. |

## CONSTRUCTION OF THE ISOGONIC CURVES.

The resulting declinations for 1890, as given in the preceding table, form the basis of the magnetic chart; the positions of the stations were plotted on two large maps on a scale of one five-millionth and the declinations set down in red ink; for this labor I am indebted to Mr. L. A. Bauer. The isogonic curves were next traced out with a free hand, first roughly and afterwards carefully, in accordance with the principle already referred to—on the one hand not to ignore the greater features and regions of local deviations from regular distribution, and on the other not to fall into error by following out defective values or very circumscribed local peculiarities. How to distinguish one case from the other has been explained, yet with all the experience gained on former occasions it was no very easy matter and frequently very embarrassing to settle finally upon the best location or form of the curve, and such uncertain or unsatisfactory parts are indicated on the chart by broken lines or dashes; the same broken curves are shown in regions where the sparseness of stations left much doubt as to the position of the curves.

For the sake of uniformity with the magnetic charts of dip and intensity published in Appendix No. 6, Annual Report for 1884–'85, the isogonic curves were transferred to the base-map of the United States, scale one seven-millionth; see first magnetic chart appended (illustration No. 25). The numerous observation stations and corresponding values could not be shown on this scale, as in some parts they would wholly cover the paper; the curves are drawn for every degree of declination and every fifth one is marked heavier for better distinction. Whatever imperfections this chart may possess they can only be removed or lessened by the acquisition of new and reliable observations.

To render the chart useful for other years than the one for which it is constructed, the leading values for the annual change of the declination, as given in Appendix No. 7, Annual Report for 1887–'88, have been transferred to our third magnetic chart (illustration No. 27), showing the magnetic meridians. These values refer to 1890, but may be applied without sensible inaccuracy for five or more years; the values answering to the year 1895 may also be found in the above-mentioned report.

*DISTRIBUTION OF THE MAGNETIC DECLINATION IN ALASKA AND ADJACENT REGIONS IN* 1890.

Since the first attempt made by me in February, 1883, to express the distribution of the magnetic declination in Alaska and adjacent waters for the epoch 1885, by a single analytical function, but little additional information could be obtained, and consequently no great improvement in our knowledge of the distribution of magnetism in this part of the United States could be expected.

A few recent observations in and near southeastern Alaska have been added to the collection of data and our knowledge of the secular variation in this region has been slightly advanced since 1883, but the general treatment of the material remains as in the first edition.

The observed declinations made use of in this paper were taken from the preceding general collection of observations as reduced to the epoch 1890. To form suitable normal values they were combined into groups, selected with respect to geographical position to cover as nearly as may be the whole area uniformly, and thus secure a satisfactory determination of the several co-efficients which enter into the function of distribution. These groups or normals are necessarily of very unequal value, primarily due to a deficiency of observations. The number of observations range from one to fourteen in a group.

*Table of normal values of the declination for* 1890 *and their geographical positions, arranged in the order of increasing west longitude from Greenwich.*

[All declinations are *east*, as shown by the minus sign prefixed; there are 101 stations altogether, combined into 34 groups.]

| Name of station. | Latitude. | West longitude. | Declination, 1890.0 | Remarks. |
|---|---|---|---|---|
| | ° | ° | ° | |
| Mouth of Thompson River. | 50.22 | 121.60 | —24.90 | |
| Thompson R., mouth of Nicola. | 50.45 | 121.37 | —25.40 | |
| Thompson River. | 50.68 | 120.20 | —23.90 | |
| Thompson River. | 50.77 | 121.09 | —23.40 | |
| Thompson R., near Kamloops. | 50.70 | 120.50 | —24.15 | |
| Mouth of Hut Creek. | 50.78 | 121.55 | —26.90 | |
| North Thompson River. | 50.95 | 120.47 | —23.78 | |
| North Thompson River. | 51.20 | 120.37 | —23.82 | |
| North Thompson River. | 51.47 | 120.42 | —25.03 | |
| North Thompson River. | 51.55 | 120.28 | —25.20 | |
| I. Mean. | 50.88 | 120.78 | —24.65 | Thompson River group. |
| II. Nee-ah Bay, Washington. | 48.36 | 124.63 | —22.73 | Fuca Strait. |
| III. Nootka Bay, Vancouver. | 49.59 | 126.62 | —23.95 | Vancouver Island. |
| Port Simpson. | 54.57 | 130.43 | —27.96 | |
| Port Essington, Skeaux River. | 54.23 | 129.78 | —27.08 | |
| Head of Work Inlet. | 54.30 | 129.72 | —27.25 | |
| 20 mls. up Skeena River. | 54.32 | 129.32 | —27.08 | |
| 30 mls. up Skeena River. | 54.37 | 129.00 | —26.50 | |
| 50 mls. up Skeena River. | 54.50 | 128.58 | —26.25 | |
| IV. Mean. | 54.38 | 129.47 | —27.02 | Skeena Inlet group. |
| Rose Harbor. | 52.15 | 131.25 | —26.01 | |
| Port McLaughlin. | 52.13 | 128.17 | —26.72 | |
| V. Mean. | 52.14 | 129.71 | —26.36 | Queen Charlotte group. |
| Tamgas Harbor. | 55.07 | 131.47 | —28.44 | |
| Pen Island. | 55.38 | 131.73 | —28.02 | |

*Table of normal values of the declination for* 1890, *etc.*—Continued.

| Name of station. | Latitude. | West longitude. | Declination, 1890.0 | Remarks. |
|---|---|---|---|---|
| | ° | ° | ° | |
| Union Bay. | 55.75 | 132.20 | —30.40 | |
| Kasaan Bay. | 55.50 | 132.32 | —27.60 | |
| Howcan Mission. | 54.83 | 132.83 | —26.89 | |
| Dewey Anchorage. | 55.93 | 132.37 | —28.36 | |
| Port McArthur. | 56.07 | 134.10 | —27.69 | |
| Point Chican. | 56.15 | 133.60 | —29.28 | |
| Shakan. | 56.15 | 133.63 | —29.75 | |
| Fort Wrangell. | 56.47 | 132.37 | —28.98 | |
| Red Bay. | 56.33 | 133.25 | —29.53 | |
| Ft. Wrangell, north base. | 56.45 | 132.38 | —29.19 | |
| South Base, Frederick Sound. | 56.92 | 132.85 | —29.52 | |
| East Base, Duncan Canal. | 56.60 | 133.10 | —29.99 | |
| VI. Mean. | 55.97 | 132.73 | —28.83 | Fort Wrangell group. |
| VII. Sitka. | 57.05 | 135.33 | —28.4 | Secular variation station. |
| VIII. Port Mulgrave. | 59.56 | 139.76 | —28.4 | Secular variation station. |
| IX. Fort Yukon. | 66.57 | 145.30 | —33.0 | |
| X. Port Etches. | 60.34 | 146.63 | —27.3 | Secular variation station. |
| Coal Point. | 59.60 | 151.40 | —24.54 | |
| Dangerous Cape. | 59.40 | 151.88 | —23.27 | |
| XI. Mean. | 59.50 | 151.64 | —23.90 | Cook Inlet group. |
| XII. Saint Paul. | 57.80 | 152.36 | —23.9 | Kadiak Isd. sec. var. station. |
| At sea. | 48.13 | 146.65 | —20.5 | From general collection of declinations. |
| At sea. | 48.73 | 143.38 | —20.9 | |
| At sea. | 51.77 | 152.60 | —22.3 | |
| At sea. | 45.32 | 160.00 | —16.1 | |
| At sea. | 45.23 | 159.68 | —17.1 | |
| XIII. Mean. | 47.83 | 152.46 | —19.4 | Group of N. E. Pacific Ocean. |
| Off Point Barrow. | 71.33 | 156.25 | —35.2 | |
| Uglaamie U. S. Polar Station. | 71.30 | 156.67 | —33.91 | |
| Plover Pt., Pt. Barrow. | 71.35 | 156.27 | —34.24 | |
| XIV. Mean. | 71.33 | 156.40 | —34.45 | Point Barrow group. |
| Chirikoff Island. | 55.80 | 155.72 | —21.65 | |
| Semidi Islands. | 56.08 | 156.65 | —21.58 | |
| Chiznik Bay. | 56.32 | 158.40 | —20.66 | |
| XV. Mean. | 56.07 | 156.92 | —21.30 | Semidi Islands group. |
| XVI. Hagmeister Island. | 58.80 | 160.83 | —21.24 | |
| Little Koniushi Isd. | 55.05 | 159.38 | —20.71 | |
| Dolgoi Isd. settlement. | 55.08 | 162.00 | —20.8 | |
| Humboldt Harbor. | 55.32 | 160.52 | —19.7 | |
| Chiachi Island. | 55.87 | 159.08 | —20.6 | |
| Port Moeller. | 55.92 | 160.58 | —20.0 | |

*Table of normal values of the declination for* 1890, *etc.*—Continued.

| Name of station. | Latitude. | West longitude. | Declination, 1890.0 | Remarks. |
|---|---|---|---|---|
| | ° | ° | ° | |
| Bailey's Harbor. | 55.15 | 162.12 | —20.5 | |
| Amok Island. | 55.45 | 164.03 | —20.0 | |
| XVII. Mean. | 55.41 | 161.10 | —20.33 | Shumagin Isds. group. |
| XVIII. Chamisso Island. | 66.22 | 161.82 | —25.2 | Secular variation station. |
| Near Cape Lisburne. | 68.88 | 166.10 | —24.1 | |
| At sea, Arctic Ocean. | 69.97 | 162.63 | —30.1 | |
| At sea, off Icy Cape. | 70.08 | 162.10 | —30.4 | |
| At sea, off Icy Cape. | 70.25 | 161.92 | —30.4 | |
| Near Icy Cape. | 70.22 | 162.25 | —28.5 | |
| XIX. Mean. | 69.88 | 163.00 | —28.7 | Group of capes Lisburne and Icy. |
| XX. Nunivak Island. | 60.42 | 166.13 | —20.03 | |
| XXI. Unalashka Island. | 53.88 | 166.52 | —18.56 | Secular variation station. |
| XXII. Port Clarence. | 65.27 | 166.83 | —21.2 | Secular variation station. |
| XXIII. Saint Paul Island. | 57.12 | 170.32 | —16.60 | |
| Saint Laurence Bay. | 65.58 | 174.73 | —18.7 | |
| At sea. | 65.58 | 170.75 | —22.0 | |
| At sea. | 65.78 | 168.92 | —21.4 | |
| Big Diomede Island. | 65.75 | 169.07 | —20.3 | |
| Bering Strait. | 66.12 | 169.28 | —22.3 | |
| Arctic Ocean. | 66.70 | 170.77 | —22.6 | |
| Pitlekai. | 67.08 | 173.50 | —17.9 | |
| Arctic Ocean. | 67.28 | 171.75 | —21.0 | |
| XXIV. Mean. | 66.23 | 171.10 | —20.8 | East Cape and Bering Strait group. |
| Plover Bay. | 64.37 | 173.37 | —16.8 | |
| Konyam Bay. | 64.83 | 172.95 | —16.1 | |
| At sea. | 64.78 | 171.58 | —21.8 | |
| XXV. Mean. | 64.66 | 172.63 | —18.2 | Plover Bay group. |
| XXVI. Atka Island. | 52.18 | 174.25 | —16.4 | |
| At sea, off Herald Island. | 70.82 | 174.53 | —23.2 | |
| At sea, off Herald Island. | 70.85 | 175.67 | —21.8 | |
| Wrangell Isd., Rodgers' Hbr. | 70.95 | 178.17 | —18.3 | |
| Wrangell Isld., east coast. | 71.07 | 177.67 | —21.8 | |
| XXVII. Mean. | 70.92 | 176.51 | —21.3 | Wrangell Island group. |
| At sea, Koliuchin Bay. | 67.87 | 175.30 | —18.3 | |
| At sea, Koliuchin Bay. | 67.97 | 175.23 | —22.0 | |
| Irkaipi. | 68.83 | 180.00 | —16.2 | |
| XXVIII. Mean. | 68.22 | 176.84 | —18.8 | Koliuchin group. |
| XXIX. Adakh Island. | 51.82 | 176.87 | —13.3 | |
| XXX. Kyska Island. | 51.98 | 182.50 | —10.5 | |
| At sea. | 59.53 | 186.80 | — 6.7 | From general collection of declinations. |
| At sea. | 59.63 | 188.83 | — 7.3 | |

*Table of normal values of the declination for* 1890, *etc.*—Continued.

| Name of station. | Latitude. | West longitude. | Declination, 1890.0 | Remarks. |
|---|---|---|---|---|
| | ° | ° | ° | |
| At sea. | 59.08 | 190.18 | — 6.7 | From general collection of declinations. |
| At sea. | 58.32 | 190.87 | — 6.1 | |
| XXXI. Mean. | 59.14 | 189.17 | — 6.7 | Cape Oliutorski group. |
| At sea. | 48.57 | 195.37 | — 5.2 | From general collection of declinations. |
| At sea. | 50.83 | 193.38 | — 3.9 | |
| At sea. | 51.90 | 191.37 | — 6.9 | |
| XXXII. Mean. | 50.43 | 193.37 | — 5.3 | Off southern Kamtchatka. |
| At sea. | 48.82 | 201.78 | — 2.4 | From general collection of declinations. |
| At sea. | 47.47 | 200.25 | — 2.0 | |
| XXXIII. Mean. | 48.15 | 201.02 | — 2.2 | Off Kuril Islands. |
| XXXIV. Petropavlovsk. | 53.02 | 201.28 | — 0.7 | Secular variation station. |

For the purpose of establishing an interpolation formula for the computation of the magnetic declination at any place within the area of Alaska and adjacent parts, we consider the observed values (arranged in 34 groups) as depending on their geographical position, that is, we take the declination D to be a function of the latitude $\varphi$ and of the longitude $\lambda$.

The distribution of the declination may then be expressed by the following formula, adapted to a spherical surface:

$$D=D_0+r\,.\,\Delta\varphi+s\,.\,\Delta\lambda\cos\varphi+t\,.\,\Delta\varphi^2+u\,.\,\Delta\varphi\Delta\lambda\cos\varphi+v\,.\,\Delta\lambda^2\cos^2\varphi$$
$$+w\,.\,\Delta\varphi^3+x\,.\,\Delta\varphi^2\Delta\lambda\cos\varphi+y\,.\,\Delta\varphi\Delta\lambda^2\cos^2\varphi+z\,.\,\Delta\lambda^3\cos^3\varphi+\text{ etc.}$$

where

$$\left.\begin{array}{l}\Delta\varphi=\varphi-\varphi_0\\ \Delta\lambda=\lambda-\lambda_0\end{array}\right\}\text{ and } r,\ s,\ t,\ \text{etc., are unknown numerical co-efficients}$$

to be determined by means of the observed declinations. Terms involving powers of $\Delta\varphi$ and $\Delta\lambda$ higher than the third are not needed.

Put $\varphi_0=58°$ and $\lambda_0=160°$, which are nearly the mean values of the 34 latitudes and 34 longitudes respectively; also take $D_0=D_1+q$ where $D_1=-21°$, an approximate value, and q a correction thereto for the central value $D_0$. Then the observation equations take the following form:

$$0=\left\{\begin{array}{l}D_1-D+q\\ +\varphi_1\,.\,r+\lambda_1\cos\varphi\,.\,s\\ +\varphi_1^2\,.\,t+\varphi_1\lambda_1\cos\varphi\,.\,u+\lambda_1^2\cos^2\varphi\,.\,v\\ +\varphi_1^3\,.\,w+\varphi_1^2\lambda_1\cos\varphi\,.\,x+\varphi_1\lambda_1^2\cos^2\varphi\,.\,y+\lambda_1^3\cos^3\varphi\,.\,z\end{array}\right.$$

where for shortness, $\varphi_1=\Delta\varphi$ and $\lambda_1=\Delta\lambda$. The first and second equations, for instance, would be:

$$0=+3.65+q-7.12r-24.74s+50.7t+176.1u+612.1v-361w-1254x-4358y-15143z$$
$$0=+1.73+q-9.64r-23.50s+92.9t+226.5u+552.2v-896w-2183x-5323y-12978z$$

The 34 observation equations thus formed, when treated by the method of least squares, give the following normal equations:

| $l$ | $q$ | $r$ | $s$ | $t$ | $u$ | $v$ | $w$ | $x$ | $y$ | $z$ |
|---|---|---|---|---|---|---|---|---|---|---|
| $0 = -14.35$ | $+34$ | $-0.88$ | $-12.79$ | $+1599.7$ | $+248.9$ | $+5557.2$ | $+4305$ | $+1090$ | $-31845$ | $-3963$ |
| $0 = +812.71$ | | $+1599.7$ | $+248.9$ | $+4305$ | $+1090$ | $-31845$ | $+155458$ | $+26143$ | $+278973$ | $+14964$ |
| $0 = -2726.3$ | | | $+5557.2$ | $+1090$ | $-31845$ | $-3693$ | $+26143$ | $-278973$ | $+14964$ | $+2475800$ |
| $0 = +954.1$ | | | | $+155458$ | $+26143$ | $+278973$ | $+878457$ | $+146780$ | $-2023310$ | $+119262$ |
| $0 = +13177$ | | | | | $+278973$ | $+14964$ | $+146780$ | $-2023310$ | $+119262$ | $-17834400$ |
| $0 = -27408$ | | | | | | $+2475790$ | $-2023310$ | $+119262$ | $-17834400$ | $+4015980$ |
| $0 = +80317$ | | | | | | | $+19165900$ | $+3054970$ | $+20498500$ | $-1233330$ |
| $0 = -118028$ | | | | | | | | $+20498500$ | $-1233330$ | $+146711600$ |
| $0 = +216147$ | | | | | | | | | $+146711600$ | $-37937000$ |
| $0 = -1170691$ | | | | | | | | | | $+1360440000$ |

To facilitate the solution of these equations we put:

$$q = +0.4 + q' \qquad t = -0.03 + t' \text{ and } 10\,t' = t'' \qquad w = -0.002 + w' \text{ and } 100\,w' = w''$$
$$r = -0.4 + r' \qquad u = +0.06 + u' \qquad 10\,u' = u'' \qquad x = +0.002 + x' \qquad 100\,x' = x''$$
$$s = +0.8 + s' \qquad v = +0.01 + v' \qquad 10\,v' = v'' \qquad y = +0.0006 + y' \qquad 100\,y' = y''$$
$$z = -0.00001 + z' \qquad 100\,z' = z''$$

Where the numerical quantities are rough approximations; the above equations will then change into the following modified normal equations:

| $l'$ | $q'$ | $r'$ | $s'$ | $t''$ | $u''$ | $v''$ | $w''$ | $x''$ | $y''$ | $z''$ |
|---|---|---|---|---|---|---|---|---|---|---|
| $0 = -13.61$ | $+34$ | $-0.88$ | $-12.79$ | $+159.97$ | $+24.89$ | $+555.7$ | $+43.05$ | $+10.90$ | $-318.45$ | $-39.63$ |
| $0 = -102.00$ | | $+1599.7$ | $+248.9$ | $+430.5$ | $+109.0$ | $-3184.5$ | $+1554.58$ | $+261.43$ | $+2789.73$ | $+149.64$ |
| $0 = +121.6$ | | | $+5557.2$ | $+109.0$ | $-3184.5$ | $-396.3$ | $+261.43$ | $+2789.73$ | $+149.64$ | $+24758$ |
| $0 = -224.0$ | | | | $+1554.58$ | $+261.43$ | $+2789.73$ | $+878.46$ | $+146.78$ | $-2023.31$ | $+119.26$ |
| $0 = -62.2$ | | | | | $+2789.73$ | $+149.64$ | $+146.78$ | $-2023.31$ | $+119.26$ | $-17834.4$ |
| $0 = -478.5$ | | | | | | $+24757.9$ | $-2023.31$ | $+119.26$ | $-17834.4$ | $+4015.98$ |
| $0 = -169.21$ | | | | | | | $+1916.59$ | $+305.50$ | $+2049.85$ | $-123.33$ |
| $0 = +32.00$ | | | | | | | | $+2049.85$ | $-123.33$ | $+14671.2$ |
| $0 = +382.44$ | | | | | | | | | $+14671.16$ | $-3793.7$ |
| $0 = +283.79$ | | | | | | | | | | $+136044$ |

Solving these equations* we get

$$q' = -0.79233 \qquad q = -0.39233$$
$$r' = +0.09844 \qquad r = -0.30156$$
$$s' = -0.05992 \qquad s = +0.74008$$
$$t'' = +0.14766 \qquad t' = +0.014766 \qquad t = -0.015234$$
$$u'' = -0.09189 \qquad u' = -0.009189 \qquad u = +0.050811$$
$$v'' = +0.02599 \qquad v' = +0.002599 \qquad v = +0.012599$$
$$w'' = +0.02510 \qquad w' = +0.0002510 \qquad w = -0.0017490$$
$$x'' = -0.06778 \qquad x' = -0.0006778 \qquad x = +0.0013222$$
$$y'' = -0.01209 \qquad y' = -0.0001209 \qquad y = +0.0004791$$
$$z'' = +0.00253 \qquad z' = +0.0000253 \qquad z = +0.0000153$$

with the following residuals in the original 10 equations:

$$\left\{\begin{array}{r} -.001 \\ -.01 \\ +.02 \\ +.1 \\ 0 \\ -2 \\ 0 \\ -2 \\ +3 \\ +16 \end{array}\right.$$

* The formation of the normal equations was made in duplicate by J. Page and C. H. Kummell, of the Computing Division, and the solution is due to the latter computer.

Hence our final expression becomes

$$D=\begin{cases} -21^{\circ}.392 \\ -0.3016\varphi_1 \quad +0.7401\lambda_1 \cos\varphi \\ -0.01523\varphi_1^2 \quad +0.05081\varphi_1\lambda_1 \cos\varphi \quad +0.01260\lambda_1^2 \cos^2\varphi \\ -0.001749\varphi_1^3 +0.001322\varphi_1^2\lambda_1 \cos\varphi +0.000479\varphi_1\lambda_1^2 \cos^2\varphi +0.0000153\lambda_1^3 \cos^3\varphi. \end{cases}$$

By means of this formula the declination was computed for each of the normal stations, whence we have the following representation of the observations:

| Group. | Obs'd D | Comp'd D | O—C | Group. | Obs'd D | Comp'd D | O—C | Group. | Obs'd D | Comp'd D | O—C |
|---|---|---|---|---|---|---|---|---|---|---|---|
| | ° | ° | ° | | ° | ° | ° | | ° | ° | ° |
| I | —24.65 | —25.01 | +0.36 | XIII | —19.4 | —19.7 | +0.3 | XXIV | —20.8 | —20.0 | —0.8 |
| II | —22.73 | —22.90 | +0.17 | XIV | —34.45 | —34.14 | —0.31 | XXV | —18.2 | —18.0 | —0.2 |
| III | —23.95 | —23.83 | —0.12 | XV | —21.30 | —21.93 | +0.63 | XXVI | —16.4 | —14.8 | —1.6 |
| IV | —27.02 | —27.27 | +0.25 | XVI | —21.24 | —21.31 | +0.07 | XXVII | —21.3 | —22.3 | +1.0 |
| V | —26.36 | —25.58 | —0.78 | XVII | —20.33 | —20.30 | —0.03 | XXVIII | —18.8 | —18.5 | —0.3 |
| VI | —28.83 | —27.97 | —0.86 | XVIII | —25.2 | —25.0 | —0.2 | XXIX | —13.3 | —13.7 | +0.4 |
| VII | —28.4 | —28.3 | —0.1 | XIX | —28.7 | —28.5 | —0.2 | XXX | —10.5 | —11.1 | +0.6 |
| VIII | —28.4 | —29.0 | +0.6 | XX | —20.03 | —19.47 | —0.56 | XXXI | — 6.7 | — 6.8 | +0.1 |
| IX | —33.0 | —33.1 | +0.1 | XXI | —18.56 | —18.00 | —0.56 | XXXII | — 5.3 | — 5.8 | +0.5 |
| X | —27.3 | —27.3 | 0.0 | XXII | —21.2 | —21.6 | +0.4 | XXXIII | — 2.2 | — 2.0 | —0.2 |
| XI | —23.90 | —25.12 | +1.22 | XXIII | —16.60 | —16.85 | +0.25 | XXXIV | — 0.7 | — 0.6 | —0.1 |
| XII | —23.9 | —24.1 | +0.2 | | | | | | | | |

The comparative smallness of these differences (O—C) indicates not only that the representation of the observations is a fair one, but that the latter seem to have been reduced with some success to a common epoch, as is shown by the distribution of the changes of sign; there are 16 negative and 17 positive signs, one of the differences being zero. The largest discrepancy (—1°.6) occurs at one of the volcanic islands, where but a single observation was available. Squaring the differences and computing the probable error (here of observation and of representation combined) by the usual formula

$$r=0.674\sqrt{\frac{[vv]}{n-m}}$$

where $n$ equals the number of differences $v$, and $m$ the number of normal equations, we get

$$r=\pm 0^{\circ}.44=\pm 26'$$

a value which we accept as very satisfactory, considering that in each case it is made up from, or subject to, four distinct sources of error, viz:

1. The error of observation;
2. The error in the reduction to the epoch;
3. The error due to the imperfection in our algebraical formula; and, lastly and principally,
4. The effect of local deflections and other irregularities in the distribution of magnetism which could not be taken into account by the general formula.

This last source alone would be sufficient to account for any or all of the differences shown in our comparison, and it is highly probable that the other sources combined contribute but a small part to the total amount.

There remains the construction of the isogonic curves, as shown in the accompanying chart (illustration No. 26); in other words, we have to find from our expression a sufficient number of corresponding values of latitude and longitude for any one proposed declination curve—the value of $D$ is thus fixed, and by taking for $\varphi$, as an independent variable, any suitable value the corre-

sponding value for $\lambda$ can be deduced by resolution of the equation, which process, however, is best effected by the method of trial and error. We take $\varphi$ as the independent variable for positions where the isogonic line makes a large angle with the parallel, but take $\lambda$ instead in case this line makes a small angle with the parallel. Below we give a few corresponding values, thus computed, for some of the leading curves, there being no advantage in tabulating all the roots that were needed for the actual construction of the curves. Between the computed points the lines are drawn by a free hand.

| D = 0° | | D = −5° | | D = −10° | | D = −15° | | D = −20° | | D = −25° | | D = −30° | | D = −35° | |
|---|---|---|---|---|---|---|---|---|---|---|---|---|---|---|---|
| $\varphi$ | $\lambda$ | $\varphi$ | $\lambda$ | $\varphi$ | $\lambda$ | $\varphi$ | $\lambda$ | $\varphi$ | $\lambda$ | $\varphi$ | $\lambda$ | $\varphi$ | $\lambda$ | $\varphi$ | $\lambda$ |
| ° | ° | ° | ° | ° | ° | ° | ° | ° | ° | ° | ° | ° | ° | ° | ° |
| 50 | 203.7 | 50 | 195.1 | 50 | 185.0 | 50 | 172.9 | 45.0 | 125 | 51.0 | 125 | 57 | 125.0 | 65 | 136.3 |
| 55 | 201.1 | 55 | 193.1 | 55 | 184.2 | 55 | 174.0 | 45.1 | 130 | 51.4 | 130 | 58 | 130.3 | 70 | 150.6 |
| 58 | 199.9 | 58 | 192.2 | 58 | 183.9 | 58 | 174.4 | 45.9 | 140 | 52 | 134.6 | 62 | 142.2 | 72.5 | 158.7 |
| | | 62 | 192.2 | 62 | 184.3 | 62 | 175.8 | 50 | 156.3 | 53.25 | 140 | 65 | 148.6 | | |
| | | 65 | 193.7 | 65 | 186.2 | 65 | 178.0 | 55 | 161.6 | 55 | 144.6 | 70 | 160.4 | | |
| | | | | | | 67.5 | 181.3 | 58 | 163.5 | 58 | 149.9 | | | | |
| | | | | | | | | 62 | 166.3 | 62 | 155.5 | | | | |
| | | | | | | | | 65 | 169.3 | 65 | 159.5 | | | | |
| | | | | | | | | 70 | 178.0 | 70 | 169.5 | | | | |
| | | | | | | | | | | 72.5 | 176.7 | | | | |

Along the central part of the peninsula of Kamtchatka our system of isogonic curves touches upon that peculiar feature in the distribution of magnetism which shows an area, oval shaped, of west declination entirely surrounded by east declination, and within which space the declination rises to 7° west. This feature is subject to secular variation, and consequently is in a continuous state of change; it seems to have formed in the present century and may not yet have reached its fullest development. In 1840 the maximum declination within the oval was a little more than 5° and the eastern limit of the agonic curve then passed through the sea of Okhotsk, which makes it probable that within the past half century the whole system has drifted slowly to the eastward.*

The chart itself is sufficiently explained by its legend.

### MAGNETIC MERIDIANS.

The ordinary method of charting observed declinations is that of drawing curves of equal angular deviation from the meridian, which are known as isogonic curves; this representation, though a wholly artificial one, is so eminently practical and directly adapted to the needs of the surveyor and navigator that another, and, from a physical stand-point, more interesting and instructive mode, is rarely resorted to. The conception of "magnetic meridians" is due to Euler, who, shortly after the middle of the last century, treated in a short digression from one of his magnetic investigations his so-called "magnetic routes," *i. e.*, curves on the earth's surface, the tangents to which at any point coincide with the direction of a compass needle placed at that point;

* Since writing the above, Vol. II of the "Journal of the College of Science, Imperial University of Japan," Tokyo, Japan, 1889, has been received; it contains an account of a new magnetic survey of Japan, carried out by order of the President of the University, by C. G. Knott and A. Tanakadate, in the year 1887. From this publication we learn that the earliest (native) magnetic survey of Japan was made by Ino about the beginning of the present century, and that his charts made at that time represent the magnetic and geographical meridians to be identical in direction, and it is further remarked that there could be no doubt that the average declination in Japan in Ino's days was zero. He completed his geographical survey between the years 1800 and 1818. About that time then the southeastern boundary of the oval was lying across Japan, whereas in 1887 the system had so far shifted as to bring the isogonics of 4½° and 5° W. over the main island. At Tokyo the annual rate of increase of westerly declination between the years 1860 and 1882 was found to be 3′.3, which, when carried back to Ino's time, would produce zero about the year 1802. [Added September, 1890.—Sch.]

these curves Euler prefers to the Halleyan lines for the purpose of representing certain magnetic phenomena. These Eulerian curves thus show the directions of lines of magnetic force (horizontal component) on the earth's surface; they have no direct relation to the geographical meridians, and consequently do not pass through the geographical poles like the isogonic curves, yet, with these, necessarily converge towards the magnetic poles (of vertical dip). We have here represented a physical fact, namely, the actual direction of the horizontal magnetic intensity. A general chart of this system was published by Captain Duperrey in 1836, and two illustrations of it on a small scale will be found in Sir G. B. Airy's Treatise on Magnetism (London, 1870). The distance between any two magnetic meridians is arbitrary. Duperrey also traced a series of curves which are in every point normal to the preceding; this second system of curves he denominates "magnetic parallels." Their utility, however, is not very obvious, and it suffices to mention them here.* In their place we find in Airy's treatise, curves of equal dip or the isoclinic lines, which, it may be seen, have a strong tendency to intersect the magnetic meridians at right angles, and the same may be said of the isodynamic curves of the horizontal intensity. The introduction of this second system in connection with the magnetic meridians has some bearing on the designation "magnetic latitude" sometimes given to the magnetic dip.

On the third chart (illustration No. 27), appended to this article, are exhibited the magnetic meridians and the present annual change of the declination for the epoch 1890. It is supposed that this is the first illustration of magnetic meridians specially delineated for the United States. The fifteen meridians, or lines of horizontal force, laid down on the chart were constructed directly from the isogonic curves; the length of each step for which a new direction was taken up averaged about 70 statute miles, or, on the scale of the map, $11^{mm}$. This, as will be noticed, produced a smooth curvature, notwithstanding the irregularities inherent in the isogonic curves. The distance between the meridians is arbitrary; it has been made equal as measured along the central horizontal intensity curve. There are also drawn on the chart three curves of equal dip and three curves of equal horizontal intensity for the year 1890, from which it would appear that the isoclinic curves more nearly approach to normal intersections with the meridians than the isodynamic curves. The interval between the dip lines is 5° and between the intensity lines 0.04 dyne; the irregularities exhibited by these curves are due to irregularities in the distribution of magnetism. The magnetic meridians, like other magnetic curves, are subject to variation in time, but this change in direction will be less marked to the eye than in the isogonic system. On this chart there is also inserted for convenience of reference the annual change of the declination for a number of stations for 1890, but the given change may be used for several years to come; for full information, however, the reader may be referred to Appendix No. 7. Report for 1887–'88.

* In a recent publication, "Détermination des Éléments Magnétiques en France, par Mr. Th. Moureaux, Paris, 1886," the magnetic meridians are laid down for January, 1885, and lines normal to the meridians are designated "magnetic parallels or equipotential lines." This second or normal system, however, is not delineated.

# APPENDIX No. 12.—1889.

## ENCROACHMENT OF THE SEA UPON THE COAST OF CAPE COD, MASSACHUSETTS, AS SHOWN BY COMPARATIVE SURVEYS.

A Report by HENRY L. MARINDIN, Assistant.

U. S. COAST AND GEODETIC SURVEY OFFICE,
*Washington, May* 10, 1889.

SIR: With the data obtained by the party of Physical Hydrography in my charge during the season of 1887 and 1888 on Cape Cod, Massachusetts, we are now able to make comparisons and show the changes which have taken place in the shore and bluff lines of this part of the Cape since previous surveys, and thus add to our knowledge of the physical history of the Cape, the study of which was initiated by Assistant Henry Mitchell in 1871 (see Appendices No. 9 in the Reports of the Coast and Geodetic Survey for 1871 and 1873).

In the following comparison the coast between Chatham and the Highland Light-house at Truro was subdivided into three sections (see illustration No. 28), each of which had been surveyed at different times. The earliest reliable survey was made in 1848, and the most recent before the last was made in 1868, so that the shortest period elapsed between any two surveys is nineteen years.

These three sections, incidentally divided, show separate characteristics. The first or southern section, 6 miles in length, surveyed in 1868 and 1887–1888, comprises the shore from a point about 1 mile north of the inlet into Pleasant Bay to the inlet into Nausett Harbor and Town Cove.

The second section, 4 miles in length, surveyed in 1856 and 1887, embraces the shore from the inlet into Nausett Harbor to the Nausett Three Lights.

The third section, 14 miles in length, extends from Nausett Three Lights to the Highland Light in Truro. This was surveyed in 1848 and 1888.

It is to be regretted that the older hydrographic surveys give so few soundings near the beach that a comparison of the "submerged apron" could not be made; therefore, in the computations of "quantity" of material moved we have considered nothing below the plane of mean low water, and we have assumed that the seaward slope of the bluffs, which was not determined in the earlier surveys, was the same as now, but the high-water line and the bluff line, where it exists, give reliable data for comparison.

In the first section the crest-line of the beach (highest water line) shows a mean recession of 159 feet in nineteen years, or 8 feet per year. The volume of material moved was 3,095,219 cubic yards; of this amount 2,107,831 cubic yards have entirely disappeared from the shore, resulting in an annual loss of 110,938 cubic yards, or 18,489 cubic yards per linear mile of coast-line, and 987,388 cubic yards merely shifted in position, going partly to build out the southern extremity of Nausett Beach at the entrance into Pleasant Bay.

Between the southern limit of the space compared above and a point 2¼ miles above the present entrance into Pleasant Bay, the shore-line has advanced into the sea from 0 feet at the northern limit to 1,100 feet at the southern end.

By consulting the accompanying sketch (illustration No. 28) a clearer idea of the changes will be gained.

Of the second or central section, between Nausett Harbor Inlet and Nausett Lights, we have two surveys, one in 1856 by Mr. C. T. Iardella, assistant, and one in 1887 by the party in my charge. The comparison shows a mean recession of the shore-line of 8 feet in thirty-one years, or at the rate of a quarter of a foot per year. The amount eroded was 1,158,652 cubic yards; of this amount 264,491 cubic yards have simply shifted position, and the balance, 894,161 cubic yards, has disappeared entirely, giving an annual loss of 28,844 cubic yards, or 7,211 cubic yards per mile of coast-line.

In the third section, from Nausett Lights to Highland Light, we have again two surveys, one made in 1848 by Mr. H. L. Whiting, assistant, and one in 1888 by the party in my charge. The mean recession of the shore was 128 feet, or at the rate of 3.2 feet per year, and shows a cut for the entire distance amounting to 30,231,038 cubic yards, or 755,776 cubic yards per year, which gives 53,984 cubic yards per linear mile of material moved.

Upon inspection of the volumes of material eroded per linear mile each year, it will be noted that they differ widely. In the first section the loss is 18,489 cubic yards, with a retreat of the high-water line of 8 feet per year. In the second section the loss is 7,211 cubic yards, with a retreat of the high-water line of a quarter of a foot per year. In the third section the loss is 53,984 cubic yards, with a retreat of 3.2 feet in the high-water line.

If we compare loss in area we find that the southern section loses yearly 0.8 of an acre for each linear mile.

The northern section loses 0.3 of an acre, and the central section, surrounding the Nausett Lights, loses only 0.03 of an acre each year per linear mile.

There might be an explanation of the above results in the theory which is held that somewhere in the vicinity of the Nausett Lights there is a division of the tidal forces; *i. e.*, that south of the Lights the resultant of the forces of the ebb and flood currents would be southerly, while to the north of the Lights the resultant would be northerly. This I believe has not been demonstrated by observations, and nothing short of a systematic series of current observations along this coast would tend to settle the question.

Summing up the changes along the entire length compared, we find that 32,233,030 cubic yards of earth and sand have disappeared. This volume can best be understood by supposing it deposited on a square mile, which it would cover to a depth of 29¼ feet, or by substituting the 55 acres included within the Capitol Grounds in Washington, D. C., which it would cover to a depth of 375 feet—in other words, the Statue of Freedom on the dome of the Capitol would be buried to a depth of 67 feet.

In the sketch is shown one cross-section in each of the three divisions (plotted from Table 2); these give an idea of the character of the shore and bluffs. In many places the highest seas at high tide wash the foot of the bluff, while in others there is a more or less wide beach with a crest and a gentle rear slope to the foot of the bluff.

Going from the inlet into Nausett Harbor towards the "Highlands of Truro" the height of the bluff increases irregularly from 34 feet (above mean sea-level) at the point first named to 65 feet at the Nausett Lights, and to 159 feet at cross-section No. 137, a short distance south of the Highland Light. At the Highland Light the bluff is 122.9 feet above mean sea-level. These bluffs have all a steep foreslope, generally at the angle of repose of the material composing them. These angles of slope we have computed from the actual measurements made on the ground, and they are given in the following table, together with other data useful for future comparisons:

TABLE No. 1.—*Seaward Bluff Slopes, Cape Cod*, 1888.

[The angle of slope is measured at foot of bluff.]

| No. of cross-section. | Horizontal distance between top and foot of bluff. | Elevation above mean sea-level. | | Vertical distance between top and foot of bluff. | Angle of slope. | Remarks. |
|---|---|---|---|---|---|---|
| | | Top of bluff. | Foot of bluff. | | | |
| | *Feet.* | *Feet.* | *Feet.* | *Feet.* | ° | |
| 1 | 91.9 | 65.0 | 13.5 | 51.5 | 29 | At Nausett Center light-house. |
| 3 | 111.5 | 84.9 | 9.3 | 75.6 | 34 | |
| 5 | 101.7 | 81.4 | 12.7 | 68.7 | 34 | |
| 7 | 137.8 | 83.6 | 14.6 | 69.0 | 27 | |
| 9 | 105.0 | 84.4 | 15.4 | 69.0 | 33 | |
| 11 | 121.4 | 78.2 | 15.7 | 62.5 | 27 | |
| 13 | 121.4 | 59.6 | 21.2 | 38.4 | 18 | |
| 15 | 124.7 | 77.5 | 22.0 | 55.5 | 24 | |
| 17 | 105.0 | 66.3 | 14.6 | 51.7 | 26 | |
| 19 | 85.3 | 69.6 | 8.2 | 61.4 | 36 | |
| 21 | 105.0 | 62.4 | 12.2 | 50.2 | 26 | |
| 23 | 98.4 | 63.4 | 10.6 | 52.8 | 28 | |
| 25 | 88.6 | 55.5 | 10.2 | 45.3 | 27 | |
| 27 | 101.7 | 53.6 | 13.3 | 40.3 | 22 | |
| 29 | 98.4 | 56.3 | 12.7 | 43.6 | 24 | |
| 31 | 75.5 | 42.5 | 10.3 | 32.2 | 23 | |
| 33 | 118.1 | 50.4 | 15.1 | 35.3 | 17 | |
| 35 | 111.5 | 51.2 | 8.1 | 43.1 | 21 | |
| 37 | 98.4 | 55.9 | 11.3 | 44.6 | 24 | |
| 39 | 111.5 | 62.2 | 11.8 | 50.4 | 24 | |
| 41 | 91.9 | 65.0 | 6.6 | 58.4 | 32 | |
| 43 | 131.2 | 82.5 | 12.6 | 69.9 | 28 | |
| 45 | 62.3 | 65.6 | 11.1 | 54.5 | 41 | |
| 47 | 118.1 | 92.7 | 11.1 | 81.6 | 35 | |
| 49 | 49.2 | 35.3 | 11.9 | 23.4 | 25 | |
| 51 | 150.9 | 66.7 | 12.9 | 53.8 | 20 | |
| 53 | 55.8 | 25.2 | 14.0 | 11.2 | 11 | |
| 55 | 121.4 | 47.9 | 13.3 | 34.6 | 16 | |
| 57 | 180.4 | 83.2 | 15.1 | 68.1 | 21 | |
| 59 | 154.2 | 53.8 | 19.4 | 34.4 | 13 | |
| 61 | 144.4 | 88.6 | 11.8 | 76.8 | 28 | |
| 63 | 124.7 | 66.7 | 13.1 | 53.6 | 23 | |
| 65 | 114.8 | 75.2 | 11.1 | 64.1 | 29 | |
| 67 | 88.6 | 68.3 | 18.6 | 49.7 | 29 | At Cahoon's Hollow life-saving station. |
| 69 | 141.1 | 87.0 | 15.9 | 71.1 | 27 | |
| 71 | 131.2 | 85.2 | 12.2 | 73.0 | 29 | |
| 73 | 78.7 | 43.5 | 11.6 | 31.9 | 22 | |
| 75 | 131.2 | 74.0 | 8.0 | 66.0 | 27 | |
| 77 | 183.7 | 100.7 | 11.7 | 89.0 | 26 | |
| 79 | 150.9 | 96.0 | 9.6 | 86.4 | 30 | |
| 81 | 75.5 | 43.1 | 11.9 | 31.2 | 22 | |
| 83 | 16.4 | 18.5 | 14.0 | 4.5 | 15 | |
| 85 | 105.0 | 22.2 | 12.2 | 10.0 | 5 | |

TABLE No. 1.—*Seaward Bluff Slopes, Cape Cod*, 1888—Continued.

| No. of cross-section. | Horizontal distance between top and foot of bluff. | Elevation above mean sea-level. | | Vertical distance between top and foot of bluff. | Angle of slope. | Remarks. |
|---|---|---|---|---|---|---|
| | | Top of bluff. | Foot of bluff. | | | |
| | *Feet.* | *Feet.* | *Feet.* | *Feet.* | ° | |
| 87 | 108.3 | 71.2 | 11.9 | 59.3 | 29 | |
| 89 | 88.6 | 53.6 | 15.5 | 38.1 | 23 | |
| 91 | 114.8 | 83.3 | 16.4 | 66.9 | 30 | |
| 93 | 154.2 | 102.0 | 13.4 | 88.6 | 30 | |
| 95 | 190.3 | 127.8 | 13.1 | 114.7 | 31 | |
| 97 | 105.0 | 68.6 | 14.2 | 54.4 | 27 | |
| 99 | 203.4 | 129.5 | 12.5 | 117.0 | 30 | |
| 101 | 196.9 | 138.4 | 10.6 | 127.8 | 33 | |
| 103 | 203.4 | 146.5 | 9.8 | 136.7 | 34 | |
| 105 | 101.7 | 79.6 | 12.0 | 67.6 | 34 | |
| 107 | 75.5 | 59.3 | 13.5 | 45.8 | 31 | |
| 109 | 111.5 | 76.6 | 15.0 | 51.6 | 25 | |
| 111 | 98.4 | 55.7 | 13.5 | 42.2 | 23 | At Pamet River life-saving station. |
| 113 | 78.7 | 36.7 | 5.9 | 30.8 | 21 | |
| 115 | 170.6 | 101.0 | 12.8 | 88.2 | 27 | |
| 117 | 203.4 | 130.8 | 13.3 | 117.5 | 30 | |
| 119 | 114.8 | 34.7 | 13.5 | 21.2 | 10 | |
| 121 | 223.1 | 133.3 | 15.2 | 118.1 | 28 | |
| 123 | 223.1 | 126.8 | 12.3 | 114.5 | 27 | |
| 125 | 131.2 | 93.4 | 11.5 | 81.9 | 32 | |
| 127 | 213.3 | 151.3 | 11.7 | 139.6 | 33 | |
| 129 | 160.8 | 80.3 | 13.5 | 66.8 | 23 | |
| 131 | 203.4 | 137.2 | 13.4 | 123.8 | 26 | |
| 133 | 259.2 | 149.4 | 11.9 | 137.5 | 28 | |
| 135 | 259.2 | 143.2 | 13.9 | 129.3 | 27 | |
| 137 | 272.3 | 159.5 | 11.4 | 148.1 | 29 | |
| 139 | 196.9 | 158.8 | 12.7 | 146.1 | 37 | |
| 141 | 150.9 | 110.7 | 15.0 | 95.7 | 32 | |
| 143 | 216.5 | 154.9 | 12.1 | 142.8 | 33 | |
| 145 | 187.0 | 113.5 | 16.4 | 97.1 | 27 | |
| 147 | 183.7 | 105.8 | 15.9 | 89.9 | 27 | |
| 149 | 196.9 | 122.9 | 13.4 | 109.5 | 29 | At Highland light-house. |
| 151 | 164.0 | 106.9 | 16.9 | 90.0 | 29 | |
| 153 | 121.4 | 87.7 | 18.5 | 69.2 | 30 | |
| 155 | 95.1 | 66.5 | 18.7 | 47.8 | 27 | |

NOTE.—For the location of cross-sections, see sketch.

TABLE No. 2.—*Cape Cod, Mass.*

[Party of Henry L. Marindin, Assistant, U. S. Coast and Geodetic Survey.]

| CROSS-SECTION No. 101, 1888. | | | CROSS SECTION No. 35, 1887. | | | CROSS-SECTION No. 43, 1887. | | |
|---|---|---|---|---|---|---|---|---|
| Distance from origin. | Height above or below mean sea-level. | Remarks. | Distance from origin. | Height above or below mean sea-level. | Remarks. | Distance from origin. | Height above or below mean sea-level. | Remarks. |
| *Metres.* | *Feet.* | | *Metres.* | *Feet.* | | *Metres.* | *Feet.* | |
| 0 | 150.3 | Origin: ° ′ ″ | 0 | -------- | Origin: ° ′ ″ | 0 | 12.3 | Origin: ° ′ ″ |
| | | Lat. 41 59 12.9 | | | Lat. 41 50 22.7 | | | Lat. 41 44 41.7 |
| | | Long. 70 00 49.7 | | | Long. 69 56 45.1 | | | Long. 69 55 48.3 |
| | | Azimuth 241° 56′ | | | Azimuth 258° 52′ | | | Azimuth 265° 13′ |
| 20 | 154.3 | | 100 | 23.4 | | 20 | 12.9 | |
| 40 | 156.3 | | 120 | 24.4 | | 40 | 12.7 | |
| 60 | 157.2 | | 140 | 28.3 | | 60 | 15.5 | |
| 80 | 161.1 | | 160 | 11.0 | | 80 | 22.0 | |
| 100 | 161.2 | | 180 | 10.8 | | 100 | 23.3 | |
| 120 | 164.3 | | 200 | 1.7 | | 120 | 23.2 | |
| 140 | 162.7 | | 210 | — 2.7 | | 140 | 15.6 | |
| 160 | 153.2 | | 300 | —11.5 | | 160 | 6.5 | |
| 170 | 150.3 | | 400 | —11.5 | | 180 | 3.9 | |
| 180 | 144.6 | | 500 | —18.5 | | 300 | —10.0 | |
| 200 | 138.4 | Bluff station. | 600 | —23.0 | | 400 | —16.5 | |
| 260 | 10.6 | Foot of bluff. | 700 | —25.0 | | 500 | —19.0 | |
| 263 | 9.4 | Crest of beach. | 800 | —27.0 | | 600 | —19.5 | |
| 295 | — 1.3 | | 900 | —34.0 | | 700 | —21.0 | |
| 400 | — 7.0 | | 975 | —38.0 | | 800 | —19.0 | |
| 500 | — 14.0 | | | | | 900 | —24.0 | |
| 600 | — 21.5 | | | | | 1000 | —29.0 | |
| 700 | — 22.0 | | | | | 1040 | —30.0 | |
| 800 | — 25.5 | | | | | | | |
| 900 | — 31.0 | | | | | | | |
| 1000 | — 35.5 | | | | | | | |

Compiled and computed by H. P. RITTER and E. E. HASKELL.

The material composing the bluffs is almost wholly sand, with here and there a stratum of blue clay cropping out, notably between sections 77 and 80, where the clay runs from the foot of the bluff (at 77) to half-way up the face of the bluff at section 79. This blue clay is also found at cross-sections 94 to 99.

At the Nausett Lights the sands of the bluff seem to be colored by iron oxides, but to the south of this point, notably on the sandy cordon which forms the sea barrier to Nausett Harbor, these sands are very white and have the appearance of having been washed by the sea and then thrown up again to form the barrier mentioned above.

This part of the Cape offers a wide and interesting field to the geologist.

In preparing this paper we have omitted much of the data obtained during the season. This will appear in the report which follows this paper as Appendix No. 13.

Yours respectfully,

HENRY L. MARINDIN,
*Assistant, Coast and Geodetic Survey.*

To the SUPERINTENDENT.

Blank page retained for pagination

# APPENDIX No. 13.—1889.

## CROSS-SECTIONS OF THE SHORE OF CAPE COD BETWEEN CHATHAM AND THE HIGHLAND LIGHT-HOUSE.

Report by HENRY L. MARINDIN, Assistant.

U. S. COAST AND GEODETIC SURVEY,
*Newton Highlands, April* 3, 1890.

The accompanying tables of cross-sections are submitted as a part of the results of the Physical Hydrographic Survey of Cape Cod, instituted in 1887.

Among the objects aimed at one was to obtain an accurate mold of the exposed shore of Cape Cod for present use in determining the amount of waste or fill since previous surveys—where the surveys are sufficiently detailed for this purpose—but the more direct object was to provide a base for future comparisons, which will be of value to geologists and others who study the changes in the coast-line.

The cross-sections are numbered consecutively from 1 to 143, beginning at a point near the entrance into Pleasant Bay at North Chatham and counting northward as far as Highland Light (also called Cape Cod Light). The sections will average one for each 300 metres of shore-line, with the exception of a part of the shore near Nausett Lights where the bluffs are high and rugged and where they were placed about 150 metres apart.

The plane of reference for the heights is mean sea-level, as derived from a series of observations of the tide made by the party of Lieut. J. E. Pillsbury, U. S. N., assistant, Coast and Geodetic Survey, at Chatham in 1886, and supplemented by other observations made by the party in my charge at the same place in 1887. These two independent series of tide observations gave very close results for the height of mean sea-level, but as the series observed in 1887 was the longer one the height derived from it was accepted and was found to be equal to 40.51 feet below the Coast and Geodetic Survey Bench No. IV, on Chatham North Light-House.

This plane was carried from section 1 to section 143 by means of two lines of precise levels, run in opposite directions, and referred to numerous bench-marks located at suitable points along the shore.

Each cross-section stands by itself, and can be reproduced on any chart by platting the position of the origin, which is expressed in latitude and longitude, and by laying off the azimuth as given in each table.

### EXPLANATION OF THE TABLES.

The number and year noted above the upper left-hand corner has reference to the field number and the year of survey.

In the first column is given the distance from the origin. This distance is given in metres, and is measured from inland seaward as far as the soundings were taken on the section.

In the second column are given the elevations above and depressions below mean sea-level in feet and tenths; all above the plane are plus and all below are expressed by the minus sign.

In the third column are given, first, the latitude and longitude of the origin, then the azimuth (true) of the section.

This azimuth is reckoned from south around by west to south, 0° to 360°.

The computations of the cross-sections were made by Messrs. E. E. Haskell and Homer P. Ritter conjointly.

The accompanying sketch (illustration No. 29) shows the approximate position of each cross-section with the location of the bench-marks.

A description of the bench-marks is given in Table A.

Respectfully submitted.

HENRY L. MARINDIN,
*Assistant, Coast and Geodetic Survey.*

To Prof. T. C. MENDENHALL,
*Superintendent.*

---

*Cross-Sections of the Shore of Cape Cod between Chatham and the Highland Light-House.*

| CROSS-SECTION NO. 1. No. 58 of 1888. | | | CROSS-SECTION NO. 2. No. 57 of 1888. | | |
|---|---|---|---|---|---|
| Distance from origin. | Height above or below mean sea-level. | Remarks. | Distance from origin. | Height above or below mean sea-level. | Remarks. |
| *Metres.* | *Feet.* | | *Metres.* | *Feet.* | |
| 0 | 2.8 | Origin: Lat. 41° 42′ 16″.3 | 0 | 2.7 | Origin: Lat. 41° 42′ 25″.6 |
| 20 | 7.6 | Long. 69° 55′ 44″.5 | 20 | 10.1 | Long. 69° 55′ 54″.4 |
| 40 | 10.4 | Azimuth, 266° 13′ | 40 | 12.6 | Azimuth, 266° 13′ |
| 60 | 5.8 | | 60 | 9.2 | |
| 80 | 8.7 | | 80 | 7.4 | |
| 100 | 12.5 | | 100 | 2.8 | |
| 120 | 7.9 | | 120 | 3.0 | |
| 140 | 8.4 | | 140 | 8.8 | |
| 160 | 9.8 | | 160 | 7.3 | |
| 180 | 11.0 | | 180 | 2.7 | |
| 190 | 7.3 | | 200 | 2.8 | |
| 300 | — 7.5 | | 220 | 3.0 | |
| 400 | —18.0 | | 240 | 5.6 | |
| 500 | —24.0 | | 260 | 6.6 | |
| 600 | —27.0 | | 280 | 6.4 | |
| 700 | —28.0 | | 300 | 5.6 | |
| 800 | —27.5 | | 320 | 5.9 | |
| 900 | —22.5 | | 340 | 6.5 | |
| 1,000 | —22.0 | | 360 | 7.6 | |
| 1,100 | —24.0 | | 380 | 7.7 | |
| 1,200 | —24.5 | | 400 | 8.7 | |
| 1,300 | —32.0 | | 420 | 11.1 | |
| 1,400 | —37.5 | | 440 | 7.9 | |

*Cross-Sections of the Shore of Cape Cod, etc.*—Continued.

CROSS-SECTION NO. 2—Continued.

No. 57 of 1888.

| Distance from origin. | Height above or below mean sea-level. | Remarks. |
|---|---|---|
| *Metres.* | *Feet.* | |
| 500 | — 4.0 | |
| 600 | —12.5 | |
| 700 | —15.5 | |
| 800 | —18.0 | |
| 900 | —19.5 | |
| 1,000 | —21.5 | |
| 1,100 | —30.0 | |
| 1,200 | —33.0 | |
| 1,300 | —27.5 | |
| 1,400 | —24.0 | |
| 1,500 | —26.5 | |
| 1,600 | —36.5 | |

CROSS-SECTION NO. 3.

No. 56 of 1888.

| | | |
|---|---|---|
| 0 | 5.8 | Origin: Lat. 41° 42′ 35″.3 |
| 20 | 7.6 | Long. 69° 55′ 52″.6 |
| 40 | 6.0 | Azimuth, 266° 13′ |
| 60 | 6.5 | |
| 80 | 10.3 | |
| 100 | 10.8 | |
| 120 | 13.0 | |
| 140 | 15.6 | |
| 160 | 10.6 | |
| 180 | 8.2 | |
| 200 | 5.7 | |
| 220 | 8.1 | |
| 240 | 6.5 | |
| 260 | 7.1 | |
| 280 | 6.3 | |
| 300 | 6.9 | |
| 320 | 7.8 | |
| 340 | 8.8 | |
| 360 | 10.9 | Crest of beach. |
| 500 | — 3.5 | |
| 600 | —11.0 | |
| 700 | —21.0 | |
| 800 | —22.5 | |
| 900 | —21,5 | |
| 1,000 | —24.0 | |
| 1,100 | —31.0 | |
| 1,200 | —36.5 | |

CROSS-SECTION NO. 4.

No. 55 of 1888.

| Distance from origin. | Height above or below mean sea-level. | Remarks. |
|---|---|---|
| *Metres.* | *Feet.* | |
| 0 | 5.2 | Origin: Lat. 41° 42′ 45″.3 |
| 20 | 5.7 | Long. 69° 55′ 45″.6 |
| 40 | 13.5 | Azimuth, 266° 13′ |
| 60 | 17.8 | |
| 80 | 14.7 | |
| 100 | 14.6 | |
| 120 | 12.6 | |
| 140 | 14.5 | |
| 160 | 13.3 | |
| 180 | 8.8 | |
| 200 | 10.3 | |
| 217 | 11.9 | Crest of beach. |
| 220 | 9.5 | |
| 300 | — 3.0 | |
| 400 | —15.0 | |
| 500 | —20.0 | |
| 600 | —21.0 | |
| 700 | —22.0 | |
| 800 | —23.0 | |
| 900 | —24.0 | |
| 950 | —28.0 | |

CROSS-SECTION NO. 5.

No. 54 of 1888.

| | | |
|---|---|---|
| 0 | 3.9 | Origin: Lat. 41° 42′ 55″.1 |
| 20 | 3.9 | Long. 69° 55′ 43″.8 |
| 40 | 5.8 | Azimuth, 266° 13′ |
| 60 | 4.3 | |
| 80 | 8.6 | |
| 100 | 19.2 | |
| 120 | 17.7 | |
| 140 | 9.8 | |
| 158 | 12.8 | Crest of beach. |
| 160 | 10.1 | |
| 180 | — 1.3 | |
| 190 | — 3.4 | |
| 200 | — 1.9 | |
| 220 | — 2.7 | |
| 300 | — 9.0 | |
| 400 | —20.5 | |

*Cross-Sections of the Shore of Cape Cod, etc.*—Continued.

CROSS-SECTION No. 5—Continued.

No. 54 of 1888.

| Distance from origin. | Height above or below mean sea-level. | Remarks. |
|---|---|---|
| *Metres.* | *Feet.* | |
| 500 | —22.0 | |
| 600 | —22.5 | |
| 700 | —23.5 | |
| 800 | —25.0 | |
| 900 | —24.5 | |
| 1,000 | —29.0 | |
| 1,100 | —37.0 | |

CROSS-SECTION No. 6.

No. 53 of 1888.

| | | |
|---|---|---|
| 0 | 1.9 | Origin: Lat. 41° 43′ 05″.0 |
| 20 | 2.9 | Long. 69° 55′ 46″.3 |
| 40 | 3.6 | Azimuth, 266° 13′ |
| 60 | 3.9 | |
| 80 | 5.2 | |
| 100 | 7.3 | |
| 120 | 7.3 | |
| 140 | 6.2 | |
| 160 | 7.3 | |
| 180 | 7.8 | |
| 200 | 9.3 | |
| 220 | 10.7 | |
| 240 | 8.9 | |
| 260 | — 0.8 | |
| 280 | — 0.5 | |
| 300 | — 1.8 | |
| 400 | —13.5 | |
| 500 | —20.0 | |
| 600 | —20.0 | |
| 700 | —20.0 | |
| 800 | —22.5 | |
| 900 | —24.5 | |
| 1,000 | —27.0 | |
| 1,100 | —30.0 | |
| 1,175 | —34.0 | |

CROSS-SECTION No. 7.

No. 52 of 1888.

| Distance from origin. | Height above or below mean sea-level. | Remarks. |
|---|---|---|
| *Metres.* | *Feet.* | |
| 0 | 0.7 | Origin: Lat. 41° 43′ 14″.6 |
| 20 | 2.6 | Long. 69° 55′ 47″.2 |
| 40 | 2.3 | Azimuth, 266° 13″ |
| 60 | 2.5 | |
| 80 | 2.2 | |
| 100 | 2.4 | |
| 120 | 5.1 | |
| 140 | 8.3 | |
| 160 | 13.3 | |
| 180 | 18.7 | |
| 200 | 20.5 | |
| 220 | 11.8 | |
| 240 | 10.9 | |
| 260 | 3.9 | |
| 280 | — 0.3 | |
| 300 | — 1.9 | |
| 400 | —13.5 | |
| 500 | —18.0 | |
| 600 | —19.0 | |
| 700 | —20.0 | |
| 800 | —20.5 | |
| 900 | —24.0 | |
| 1,000 | —27.5 | |
| 1,100 | —28.0 | |
| 1,200 | —37.0 | |

CROSS-SECTION No. 8.

No. 51 of 1888.

| | | |
|---|---|---|
| 0 | 2.5 | Origin: Lat. 41° 43′ 24″.4 |
| 20 | 2.7 | Long. 69° 55′ 43″.3 |
| 40 | 3.3 | Azimuth, 266° 13′ |
| 60 | 4.1 | |
| 80 | 6.5 | |
| 100 | 12.8 | |
| 120 | 16.9 | |
| 140 | 13.8 | |

*Cross-Sections of the Shore of Cape Cod, etc.*—Continued.

CROSS-SECTION NO 8—Continued

No. 51 of 1888.

| Distance from origin. | Height above or below mean sea-level. | Remarks. |
|---|---|---|
| *Metres.* | *Feet.* | |
| 160 | 6.0 | |
| 180 | — 2.6 | |
| 200 | — 2.1 | |
| 220 | — 4.1 | |
| 300 | — 12.0 | |
| 400 | —21.0 | |
| 500 | —26.0 | |
| 600 | —24.5 | |
| 700 | —22.0 | |
| 800 | —21.5 | |
| 900 | —20.0 | |
| 1,000 | —22.0 | |
| 1,100 | —24.0 | |
| 1,200 | —28.0 | |
| 1,300 | —30.0 | |
| 1,400 | —34.5 | |
| 1,500 | —34.5 | |
| 1,600 | —35.5 | |
| 1,700 | —36.0 | |

CROSS-SECTION NO. 9.

No. 50 of 1888.

| | | |
|---|---|---|
| 0 | 3.1 | Origin: Lat. 41° 43′ 33″.8 |
| 20 | 3.2 | Long. 69° 55′ 51″.5 |
| 40 | 3.2 | Azimuth, 266° 13′ |
| 60 | 3.8 | |
| 80 | 4.6 | |
| 100 | 6.9 | |
| 120 | 8.7 | |
| 140 | 9.6 | |
| 160 | 10.4 | |
| 180 | 12.6 | |
| 200 | 16.6 | |
| 220 | 9.0 | |
| 240 | 0.9 | |
| 260 | — 1.5 | |
| 280 | — 2.9 | |

CROSS-SECTION NO. 9—Continued.

No. 50 of 1888.

| Distance from origin. | Height above or below mean sea-level. | Remarks. |
|---|---|---|
| *Metres.* | *Feet.* | |
| 400 | — 8.9 | |
| 500 | —18.5 | |
| 600 | —21.0 | |
| 700 | —21.0 | |
| 800 | —19.0 | |
| 900 | —22.0 | |
| 1,000 | —22.0 | |
| 1,100 | —22.0 | |
| 1,200 | —26.0 | |
| 1,300 | —31.5 | |
| 1,400 | —34.0 | |

CROSS-SECTION NO. 10.

No. 49 of 1887.

| | | |
|---|---|---|
| 0 | 9.4 | Origin: Lat. 41° 43′ 43″.8 |
| 20 | 9.9 | Long. 69° 55′ 44″.2 |
| 40 | 12.0 | Azimuth, 266° 13′ |
| 60 | 17.1 | |
| 80 | 20.1 | |
| 100 | 20.4 | |
| 120 | 14.1 | |
| 140 | 13.5 | |
| 160 | 6.3 | |
| 180 | 4.2 | |
| 190 | 4.8 | |
| 210 | — 5.0 | |
| 300 | —17.0 | |
| 400 | —22.5 | |
| 500 | —26.5 | |
| 600 | —26.0 | |
| 700 | —20.5 | |
| 800 | —19.0 | |
| 900 | —20.5 | |
| 1,000 | —27.5 | |
| 1,100 | —35.0 | |
| 1,200 | —34.5 | |
| 1,275 | —36.0 | |

*Cross-Sections of the Shore of Cape Cod, etc.*—Continued.

CROSS-SECTION NO. 11.

No. 48 of 1887.

| Distance from origin. | Height above or below mean sea-level. | Remarks. |
|---|---|---|
| *Metres.* | *Feet.* | |
| 0 | 21.2 | Origin: Lat. 41° 43′ 53″.6 |
| 20 | 17.8 | Long. 69° 55′ 42″.5 |
| 40 | 13.9 | Azimuth, 266° 13′ |
| 60 | 15.4 | |
| 80 | 12.6 | |
| 100 | 5.9 | |
| 115 | 3.8 | |
| 200 | —11.0 | |
| 300 | —21.0 | |
| 400 | —23.5 | |
| 500 | —20.0 | |
| 600 | —19.0 | |
| 700 | —20.0 | |
| 800 | —28.0 | |
| 900 | —23.5 | |
| 1,000 | —24.0 | |
| 1,100 | —28.0 | |
| 1,200 | —33.5 | |

CROSS-SECTION NO. 12.

No. 47 of 1887.

| | | |
|---|---|---|
| 0 | 17.6 | Origin: Lat. 41° 44′ 03″.3 |
| 20 | 25.1 | Long. 69° 55′ 03″.6 |
| 40 | 15.4 | Azimuth, 266° 13′ |
| 60 | 15.9 | |
| 80 | 11.1 | |
| 100 | 3.7 | |
| 200 | —11.0 | |
| 300 | —19.0 | |
| 400 | —20.0 | |
| 500 | —21.0 | |
| 600 | —23.0 | |
| 700 | —22.0 | |
| 800 | —21.0 | |
| 900 | —23.0 | |
| 1,000 | —35.0 | |
| 1,100 | —37.5 | |
| 1,200 | —37.0 | |
| 1,250 | —37.0 | |

CROSS-SECTION NO. 13.

No. 46 of 1887.

| Distance from origin. | Height above or below mean sea-level. | Remarks. |
|---|---|---|
| *Metres.* | *Feet.* | |
| 0 | 10.5 | Origin: Lat. 41° 44′ 12″.4 |
| 20 | 11.0 | Long. 69° 55′ 50″.2 |
| 40 | 12.2 | Azimuth, 265° 13′ |
| 60 | 11.4 | |
| 80 | 12.2 | |
| 100 | 14.4 | |
| 120 | 17.5 | |
| 140 | 17.4 | |
| 160 | 19.0 | |
| 180 | 25.8 | |
| 200 | 25.0 | |
| 220 | 15.9 | |
| 240 | 10.2 | |
| 260 | 5.5 | |
| 270 | 3.5 | |
| 300 | — 3.0 | |
| 400 | —16.5 | |
| 500 | —21.0 | |
| 600 | —22.0 | |
| 700 | —21.0 | |
| 800 | —20.0 | |
| 900 | —21.5 | |
| 1,000 | —27.0 | |
| 1,100 | —30.5 | |
| 1,200 | —30.0 | |
| 1,300 | —33.0 | |
| 1,375 | —36.0 | |

CROSS-SECTION NO. 14.

No. 45 of 1887.

| | | |
|---|---|---|
| 0 | 19.8 | Origin: Lat. 41° 44′ 22″.7 |
| 20 | 23.0 | Long. 69° 55′ 43″.5 |
| 40 | 15.8 | Azimuth, 265° 13′ |
| 60 | 15.9 | |
| 80 | 7.1 | |
| 100 | 4.2 | |
| 110 | 3.5 | |
| 200 | —12.0 | |
| 300 | —22.0 | |

*Cross-Sections of the Shore of Cape Cod, etc.*—Continued.

CROSS-SECTION No. 14—Continued.

No. 45 of 1887.

| Distance from origin. | Height above or below mean sea-level. | Remarks. |
|---|---|---|
| *Metres.* | *Feet.* | |
| 400 | —25.0 | |
| 500 | —22.5 | |
| 600 | —20.5 | |
| 700 | —20.0 | |
| 800 | —22.0 | |
| 900 | —31.0 | |
| 1,000 | —37.0 | |
| 1,100 | —36.0 | |

CROSS-SECTION No. 15.

No. 44 of 1887.

| | | |
|---|---|---|
| 0 | 20.3 | Origin: Lat. 41° 44′ 32″.3 |
| 10 | 22.6 | Long. 69° 55′ 44″.6 |
| 20 | 19.6 | Azimuth, 265° 13′ |
| 40 | 16.0 | |
| 60 | 16.8 | |
| 80 | 8.5 | |
| 100 | 4.7 | |
| 110 | 3.6 | |
| 200 | —9.0 | |
| 300 | —20.0 | |
| 400 | —24.0 | |
| 500 | —21.0 | |
| 600 | —19.5 | |
| 700 | —20.5 | |
| 800 | —21.0 | |
| 900 | —26.0 | |
| 1,000 | —31.0 | |
| 1,075 | —34.0 | |

CROSS-SECTION No. 16.

No. 43 of 1887.

| | | |
|---|---|---|
| 0 | 12.3 | Origin: Lat. 41° 44′ 41″.7 |
| 20 | 12.9 | Long. 69° 55′ 48″.3 |
| 40 | 12.7 | Azimuth, 265° 13′ |
| 60 | 15.5 | |
| 80 | 22.0 | |
| 100 | 23.3 | |
| 120 | 23.2 | |

CROSS-SECTION No. 16—Continued.

No. 43 of 1887.

| Distance from origin. | Height above or below mean sea-level. | Remarks. |
|---|---|---|
| *Metres.* | *Feet.* | |
| 140 | 15.6 | |
| 160 | 6.5 | |
| 180 | 3.9 | |
| 300 | —10.0 | |
| 400 | —16.5 | |
| 500 | —19.0 | |
| 600 | —19.5 | |
| 700 | —21.0 | |
| 800 | —19.0 | |
| 900 | —24.0 | |
| 1,000 | —29.0 | |
| 1,040 | —30.0 | |

CROSS-SECTION No. 17.

No. 0 of 1887.

| | | |
|---|---|---|
| 0 | ---------- | Origin: Lat. 41° 44′ 50″.9 |
| 20 | 15.3 | Long. 69° 55′ 46″.6 |
| 40 | 16.4 | Azimuth, 265° 13′ |
| 60 | 16.1 | |
| 80 | 12.9 | |
| 100 | 6.5 | |
| 120 | 3.9 | |
| 200 | —11.0 | |
| 300 | —18.5 | |
| 400 | —18.0 | |
| 500 | —22.0 | |
| 600 | —24.0 | |
| 700 | —22.5 | |
| 800 | —19.5 | |
| 900 | —23.0 | |
| 1,000 | —30.0 | |
| 1,050 | —34.0 | |

CROSS-SECTION No. 18.

No. 1 of 1887.

| | | |
|---|---|---|
| 0 | 17.4 | Origin: Lat. 41° 45′ 00″.9. |
| 20 | 18.0 | Long. 69° 55′ 47″.8 |
| 40 | 12.8 | Azimuth, 265° 13′ |
| 60 | 13.0 | |

*Cross-Sections of the Shore of Cape Cod, etc.*—Continued.

CROSS-SECTION No. 18—Continued.
No. 1 of 1887.

| Distance from origin. | Height above or below mean sea-level. | Remarks. |
|---|---|---|
| *Metres.* | *Feet.* | |
| 80 | 4.0 | |
| 100 | 1.3 | |
| 110 | 0.8 | |
| 200 | —11.0 | |
| 300 | —24.0 | |
| 400 | —22.0 | |
| 500 | —22.0 | |
| 600 | —24.0 | |
| 700 | —19.0 | |
| 800 | —20.0 | |
| 900 | —24.0 | |
| 1,000 | —27.0 | |
| 1,100 | —34.0 | |

CROSS-SECTION No. 19.
No. 2 of 1887.

| | | |
|---|---|---|
| 0 | 9.6 | Origin: Lat. 41° 45′ 10″.6 |
| 20 | 9.8 | Long. 69° 55′ 50″.6 |
| 40 | 12.7 | Azimuth, 265° 13′ |
| 60 | 18.2 | |
| 75 | 23.9 | |
| 100 | 13.6 | |
| 120 | 3.7 | |
| 200 | — 5.5 | |
| 300 | —16.0 | |
| 400 | —20.0 | |
| 500 | —24.0 | |
| 600 | —22.0 | |
| 700 | —19.0 | |
| 800 | —19.0 | |
| 900 | —20.5 | |
| 1,000 | —25.0 | |
| 1,100 | —31.0 | |
| 1,150 | —36.0 | |

CROSS-SECTION No. 20.
No. 3 of 1887.

| | | |
|---|---|---|
| 0 | 19.6 | Origin: Lat. 41° 45′ 20″.4 |
| 20 | 15.8 | Long. 69° 55′ 51″.8 |

CROSS-SECTION No. 20—Continued.
No. 3 of 1887.

| Distance from origin. | Height above or below mean sea-level. | Remarks. |
|---|---|---|
| *Metres.* | *Feet.* | |
| 40 | 12.2 | Azimuth, 265° 13′ |
| 60 | 11.0 | |
| 80 | 10.2 | |
| 100 | 11.6 | |
| 120 | 11.4 | |
| 140 | 4.7 | |
| 160 | 5.1 | |
| 175 | 3.1 | |
| 200 | — 5.5 | |
| 300 | —12.0 | |
| 400 | —20.5 | |
| 500 | —26.5 | |
| 600 | —26.0 | |
| 700 | —19.5 | |
| 800 | —18.0 | |
| 900 | —23.0 | |
| 1,000 | —29.0 | |
| 1,100 | —34.0 | |

CROSS-SECTION No. 21.
No. 4 of 1887.

| | | |
|---|---|---|
| 0 | 16.7 | Origin: Lat. 41° 45′ 30″.1 |
| 15 | 20.1 | Long. 69° 55′ 51″.1 |
| 20 | 13.0 | Azimuth, 265° 13′ |
| 40 | 13.6 | |
| 60 | 6.5 | |
| 75 | 3.4 | |
| 100 | — 6.5 | |
| 200 | —17.0 | |
| 300 | — 16.5 | |
| 400 | —17.5 | |
| 500 | —20.5 | |
| 600 | —20.0 | |
| 700 | —18.0 | |
| 800 | —21.5 | |
| 900 | —24.0 | |
| 1,000 | —27.5 | |
| 1,100 | —33.5 | |
| 1,140 | —34.0 | |

*Cross-Sections of the Shore of Cape Cod, etc.*—Continued.

CROSS-SECTION No. 22.

No. 5 of 1887.

| Distance from origin. | Height above or below mean sea-level. | Remarks. |
|---|---|---|
| *Metres.* | *Feet.* | |
| 0 | 7.1 | Origin: Lat. 41° 45′ 39″.2 |
| 20 | 8.5 | Long. 69° 55′ 58″.0 |
| 40 | 10.5 | Azimuth, 265° 13′ |
| 60 | 12.3 | |
| 80 | 15.4 | |
| 100 | 19.1 | |
| 120 | 21.3 | |
| 140 | 23.0 | |
| 160 | 13.5 | |
| 180 | 13.2 | |
| 200 | 4.7 | |
| 215 | 3.3 | |
| 300 | —18.0 | |
| 400 | —23.0 | |
| 500 | —18.5 | |
| 600 | —17.0 | |
| 700 | —16.5 | |
| 800 | —15.5 | |
| 900 | —19.5 | |
| 1,000 | —25.0 | |
| 1,100 | —32.0 | |
| 1,140 | —35.0 | |

CROSS-SECTION No. 23.

No. 6 of 1887.

| | | |
|---|---|---|
| 0 | 21.2 | Origin: Lat. 41° 45′ 49″.0 |
| 20 | 16.1 | Long. 69° 55′ 54″.9 |
| 40 | 13.2 | Azimuth, 265° 13′ |
| 60 | 10.7 | |
| 80 | 11.1 | |
| 100 | 13.5 | |
| 120 | 5.0 | |
| 140 | 4.0 | |
| 150 | 3.4 | |
| 200 | —11.0 | |
| 300 | — 9.5 | |
| 400 | —15.5 | |
| 500 | —20.5 | |
| 600 | —21.5 | |
| 700 | —19.0 | |

CROSS-SECTION No. 23—Continued.

No. 6 of 1887.

| Distance from origin. | Height above or below mean sea-level. | Remarks. |
|---|---|---|
| *Metres.* | *Feet.* | |
| 800 | —19.0 | |
| 900 | —24.0 | |
| 1,000 | —28.0 | |
| 1,100 | —37.0 | |

CROSS-SECTION No. 24.

No. 7 of 1887.

| | | |
|---|---|---|
| 0 | 15.0 | Origin: Lat. 41° 45′ 58″.5 |
| 20 | 14.0 | Long. 69° 55′ 03″.5 |
| 40 | 9.2 | Azimuth, 265° 13′ |
| 60 | 6.2 | |
| 100 | — 6.5 | |
| 200 | —16.0 | |
| 300 | —17.0 | |
| 400 | —19.5 | |
| 500 | —21.0 | |
| 600 | —14.0 | |
| 700 | —16.5 | |
| 800 | —21.0 | |
| 900 | —27.0 | |
| 1,000 | —30.5 | |
| 1,060 | —34.0 | |

CROSS-SECTION No. 25.

No. 8 of 1887.

| | | |
|---|---|---|
| 0 | 6.9 | Origin: Lat. 41° 46′ 08″.3 |
| 20 | 6.1 | Long. 69° 55′ 04″.3 |
| 40 | 7.6 | Azimuth, 265° 13′ |
| 60 | 8.1 | |
| 80 | 8.6 | |
| 100 | 9.3 | |
| 120 | 10.0 | |
| 140 | 10.8 | |
| 160 | 11.5 | |
| 180 | 12.0 | |
| 200 | 13.6 | |
| 220 | 7.1 | |
| 240 | 3.3 | |
| 300 | —10.5 | |

*Cross-Sections of the Shore of Cape Cod, etc.*—Continued.

CROSS-SECTION No. 25—Continued.

No. 8 of 1887.

| Distance from origin. | Height above or below mean sea-level. | Remarks. |
|---|---|---|
| *Metres.* | *Feet.* | |
| 400 | —21.1 | |
| 500 | —17.0 | |
| 600 | —17.0 | |
| 700 | —16.5 | |
| 800 | —16.0 | |
| 900 | —19.0 | |
| 1,000 | —26.0 | |
| 1,100 | —29.0 | |
| 1,200 | —32.0 | |

CROSS-SECTION No. 26.

No. 9 of 1887.

| | | |
|---|---|---|
| 0 | 15.3 | Origin: Lat. 41° 46′ 18″.5 |
| 20 | 14.9 | Long. 69° 55′ 59″.3 |
| 40 | 9.9 | Azimuth, 265° 13′ |
| 60 | 9.0 | |
| 80 | 10.8 | |
| 100 | 3.5 | |
| 200 | —14.5 | |
| 300 | —20.0 | |
| 400 | —13.5 | |
| 500 | —12.5 | |
| 600 | —16.0 | |
| 700 | —19.5 | |
| 800 | —26.0 | |
| 900 | —28.0 | |
| 1,000 | —31.5 | |

CROSS-SECTION No. 27.

No. 10 of 1887.

| | | |
|---|---|---|
| 0 | 6.8 | Origin: Lat. 41° 46′ 28″.1 |
| 20 | 6.9 | Long. 69° 55′ 00″.4 |
| 40 | 7.6 | Azimuth, 265° 13′ |
| 60 | 9.7 | |
| 80 | 9.8 | |
| 100 | 3.7 | |
| 110 | 0.0 | |
| 200 | —14.5 | |
| 300 | —17.5 | |

CROSS-SECTION No. 27—Continued.

No. 10 of 1887.

| Distance from origin. | Height above or below mean sea-level. | Remarks. |
|---|---|---|
| *Metres.* | *Feet.* | |
| 400 | —17.7 | |
| 500 | —17.0 | |
| 600 | —12.0 | |
| 700 | —18.0 | |
| 800 | —25.0 | |
| 900 | —29.0 | |
| 1,000 | —30.0 | |

CROSS-SECTION No. 28.

No. 11 of 1887.

| | | |
|---|---|---|
| 0 | 4.2 | Origin: Lat. 41° 46′ 37″.7 |
| 20 | 7.8 | Long. 69° 55′ 04″.1 |
| 40 | 7.6 | Azimuth, 265° 13′ |
| 60 | 11.7 | |
| 80 | 13.5 | |
| 100 | 10.9 | |
| 120 | 3.0 | |
| 140 | — 1.4 | |
| 150 | — 1.6 | |
| 200 | — 6.0 | |
| 300 | —12.5 | |
| 400 | —12.0 | |
| 500 | —17.5 | |
| 600 | —21.0 | |
| 700 | —16.0 | |
| 800 | —26.0 | |
| 900 | —28.0 | |
| 1,000 | —33.0 | |

CROSS-SECTION No. 29.

No. 12 of 1887.

| | | |
|---|---|---|
| 0 | -------- | Origin: Lat. 41° 46′ 47″.6 |
| 20 | 18.0 | Long. 69° 56′ 00″.9 |
| 35 | 23.5 | Azimuth, 265° 13′ |
| 40 | 15.2 | |
| 60 | 7.2 | |
| 80 | 0.3 | |
| 90 | — 1.5 | |
| 100 | — 5.5 | |

*Cross-Sections of the Shore of Cape Cod, etc.*—Continued.

CROSS-SECTION NO. 29—Continued.

No. 12 of 1887.

| Distance from origin. | Height above or below mean sea-level. | Remarks. |
|---|---|---|
| *Metres.* | *Feet.* | |
| 200 | —13.0 | |
| 300 | —18.0 | |
| 400 | —23.0 | |
| 500 | —14.5 | |
| 600 | —19.0 | |
| 700 | —21.5 | |
| 800 | —29.0 | |
| 900 | —36.0 | |

CROSS-SECTION NO. 30.

No. 13 of 1887.

| | | |
|---|---|---|
| 0 | 24.1 | Origin: Lat. 41° 46′ 57″.3 |
| 20 | 11.6 | Long. 69° 56′ 01″.0 |
| 40 | — 1.2 | Azimuth, 265° 13′. |
| 100 | — 7.0 | |
| 200 | —11.0 | |
| 300 | —18.5 | |
| 400 | —20.0 | |
| 500 | —17.0 | |
| 600 | —21.0 | |
| 700 | —27.0 | |
| 800 | —31.0 | |
| 900 | —31.0 | |
| 925 | —34.0 | |

CROSS-SECTION NO. 31.

No. 14 of 1887.

| | | |
|---|---|---|
| 0 | 3.4 | Origin: Lat. 41° 47′ 07″.5 |
| 20 | 4.6 | Long. 69° 56′ 05″.6 |
| 40 | 7.8 | Azimuth, 265° 13′ |
| 60 | 13.8 | |
| 80 | 28.6 | |
| 100 | 15.4 | |
| 120 | 13.6 | |
| 140 | 7.2 | |
| 160 | — 2.2 | |
| 180 | — 2.1 | |
| 200 | — 2.7 | |
| 300 | — 9.0 | |

CROSS-SECTION NO. 31—Continued.

No. 14 of 1887.

| Distance from origin. | Height above or below mean sea-level. | Remarks. |
|---|---|---|
| *Metres.* | *Feet.* | |
| 400 | —14.5 | |
| 500 | —17.0 | |
| 600 | —17.5 | |
| 700 | —22.0 | |
| 800 | —22.5 | |
| 900 | —30.0 | |
| 1,000 | —37.0 | |

CROSS-SECTION NO. 32.

No. 15 of 1887.

| | | |
|---|---|---|
| 0 | 32.2 | Origin: Lat. 41° 47′ 16″.2 |
| 20 | 30.9 | Long. 69° 56′ 03″.3 |
| 40 | 11.8 | Azimuth, 265° 13′ |
| 49 | 12.2 | |
| 60 | 3.8 | |
| 75 | — 2.6 | |
| 200 | —11.0 | |
| 300 | —10.0 | |
| 400 | —18.0 | |
| 500 | —20.0 | |
| 600 | —19.0 | |
| 700 | —21.0 | |
| 800 | —33.5 | |
| 900 | —34.0 | |
| 1,000 | —34.0 | |

CROSS-SECTION NO. 33.

No. 16 of 1887.

| | | |
|---|---|---|
| 0 | 23.1 | Origin: Lat. 41° 47′ 25″.8 |
| 20 | 25.2 | Long. 69° 56′ 04″.2 |
| 38 | 26.2 | Azimuth, 265° 13′ |
| 40 | 25.8 | |
| 60 | 11.8 | |
| 80 | 11.3 | |
| 100 | 9.7 | |
| 120 | — 0.8 | |
| 130 | — 3.5 | |
| 200 | — 9.0 | |
| 300 | — 8.5 | |

*Cross-Sections of the Shore of Cape Cod, etc.*—Continued.

CROSS-SECTION No. 33—Continued.

No. 16 of 1887.

| Distance from origin. | Height above or below mean sea-level. | Remarks. |
|---|---|---|
| *Metres.* | *Feet.* | |
| 400 | —13.5 | |
| 500 | —19.0 | |
| 600 | —18.5 | |
| 700 | —23.0 | |
| 800 | —33.0 | |

CROSS-SECTION No. 34.

No. 17 of 1887.

| | | |
|---|---|---|
| 0 | 5.2 | Origin: Lat. 41° 47′ 35″.3 |
| 20 | 10.9 | Long. 69° 56′ 08″.0 |
| 40 | 24.2 | Azimuth, 265° 13′ |
| 60 | 29.6 | |
| 80 | 28.1 | |
| 100 | 34.5 | |
| 120 | 11.5 | |
| 140 | 11.1 | |
| 160 | 10.8 | |
| 172 | 9.8 | |
| 180 | 2.8 | |
| 200 | — 4.5 | |
| 300 | — 9.5 | |
| 400 | — 9.0 | |
| 500 | —16.5 | |
| 600 | —19.5 | |
| 700 | —17.5 | |
| 800 | —22.0 | |
| 900 | —27.5 | |
| 1,000 | —34.0 | |
| 1,050 | —40.0 | |

CROSS-SECTION No. 35.

No. 18 of 1887.

| | | |
|---|---|---|
| 0 | 20.2 | Origin: Lat. 41° 47′ 43″.0 |
| 20 | 7.8 | Long. 69° 56′ 16″.7 |
| 40 | 4.8 | Azimuth, 265° 13′ |

CROSS-SECTION No. 35—Continued.

No. 18 of 1887.

| Distance from origin. | Height above or below mean sea-level. | Remarks. |
|---|---|---|
| *Metres.* | *Feet.* | |
| 60 | 3.3 | |
| 80 | 4.2 | |
| 100 | 4.3 | |
| 120 | 4.0 | |
| 140 | 5.0 | |
| 160 | 5.3 | |
| 180 | 6.2 | |
| 200 | 6.9 | |
| 220 | 8.9 | |
| 240 | 11.4 | |
| 251 | 8.1 | |
| 260 | 6.5 | |
| 280 | — 3.0 | |
| 300 | — 3.5 | |
| 320 | — 4.1 | |
| 400 | — 3.5 | |
| 500 | — 6.0 | |
| 600 | — 6.5 | |
| 700 | — 9.0 | |
| 800 | —19.0 | |
| 900 | —21.5 | |
| 1,000 | —21.5 | |
| 1,100 | —31.0 | |
| 1,140 | —34.0 | |

CROSS-SECTION No. 36.

No. 19 of 1887.

| | | |
|---|---|---|
| 0 | ..... | Origin: Lat. 41° 47′ 51″.6 |
| 300 | — 4.0 | Long. 69° 56′ 05″.9 |
| 400 | —16.0 | Azimuth, 258° 52′ |
| 500 | —23.0 | |
| 600 | —19.0 | |
| 700 | —22.0 | |
| 800 | —28.5 | |
| 900 | —33.0 | |
| 960 | —37.0 | |

*Cross-Sections of the Shore of Cape Cod, etc.*—Continued.

CROSS-SECTION OVER BAR AT HARBOR ENTRANCE NEAR NO. 36.

| Distance from origin. | Height above or below mean sea-level. | Remarks. |
|---|---|---|
| *Metres.* | *Feet.* | |
| 0 | — 2.4 | Origin: Lat. 41° 47′ 51″.6 |
| 20 | + 1.5 | Long. 69° 56′ 08″.7 |
| 40 | — 2.9 | Azimuth, 263° 58′ |
| 60 | + 1.9 | |
| 80 | + 1.9 | |
| 100 | + 1.0 | |
| 120 | — 1.0 | |
| 140 | — 2.4 | |
| 160 | — 0.4 | |
| 180 | — 0.5 | |
| 200 | — 0.9 | |
| 220 | — 1.8 | |
| 240 | — 2.4 | |
| 260 | — 3.0 | |

CROSS-SECTION NO. 37.

No. 20 of 1887.

| | | |
|---|---|---|
| 0 | -------- | Origin: Lat. 41° 48′ 01″.3 |
| 240 | —10.0 | Long. 69° 56′ 08″.4 |
| 300 | —16.0 | Azimuth, 258° 52′ |
| 400 | —17.5 | |
| 500 | —16.5 | |
| 600 | —23.0 | |
| 700 | —29.0 | |
| 800 | —33.0 | |
| 900 | —38.0 | |

CROSS-SECTION OVER BAR AT HARBOR ENTRANCE NEAR NO. 37.

| | | |
|---|---|---|
| 0 | — 2.0 | Origin: Lat. 41° 47′ 58″.3 |
| 20 | — 2.0 | Long. 69° 56′ 13″.8 |
| 40 | — 1.5 | Azimuth, 260° 14′ |
| 60 | — 1.7 | |

CROSS-SECTION OVER BAR AT HARBOR ENTRANCE NEAR NO. 37—Continued.

| Distance from origin | Height above or below mean sea-level. | Remarks. |
|---|---|---|
| *Metres.* | *Feet.* | |
| 80 | — 2.0 | |
| 100 | — 2.6 | |
| 120 | — 2.1 | |
| 140 | — 2.7 | |
| 160 | — 2.6 | |
| 180 | — 2.7 | |
| 200 | — 2.5 | |
| 220 | — 2.8 | |

CROSS-SECTION NO. 38.

No. 21 of 1887.

| | | |
|---|---|---|
| 0 | 3.4 | Origin: Lat. 41° 48′ 09″.6 |
| 30 | 12.2 | Long. 69° 56′ 19″.8 |
| 50 | 10.6 | Azimuth, 258° 52′ |
| 70 | 11.4 | |
| 90 | 0.3 | |
| 110 | 0.4 | |
| 130 | 23.9 | |
| 150 | 22.1 | |
| 170 | 12.4 | |
| 190 | 9.1 | |
| 210 | 6.6 | |
| 230 | 4.9 | |
| 250 | 5.6 | |
| 270 | 6.5 | |
| 285 | 7.6 | |
| 300 | 5.8 | |
| 320 | — 0.2 | |
| 340 | — 1.1 | |
| 360 | — 0.3 | |
| 380 | — 2.2 | |
| 500 | —13.0 | |
| 600 | —16.0 | |

*Cross-Sections of the Shore of Cape Cod, etc.*—Continued.

CROSS-SECTION No. 38—Continued.

No. 21 of 1887.

| Distance from origin. | Height above or below mean sea-level. | Remarks. |
|---|---|---|
| *Metres.* | *Feet.* | |
| 700 | —13.0 | |
| 800 | —18.0 | |
| 900 | —25.0 | |
| 1,000 | —30.5 | |
| 1,100 | —33.0 | |
| 1,150 | —35.0 | |

CROSS-SECTION No. 39.

No. 22 of 1887.

| | | |
|---|---|---|
| 0 | 25.4 | Origin: Lat. 41° 48′ 20″.4 |
| 20 | 18.1 | Long. 69° 56′ 13″.3 |
| 40 | 16.0 | Azimuth, 258° 52′ |
| 60 | 7.4 | |
| 80 | 6.8 | |
| 92 | 8.8 | |
| 104 | 3.4 | |
| 120 | 3.1 | |
| 140 | — 2.8 | |
| 200 | — 9.0 | |
| 300 | —17.0 | |
| 400 | —21.0 | |
| 500 | —14.5 | |
| 600 | —22.0 | |
| 700 | —25.5 | |
| 800 | —31.0 | |
| 900 | —34.0 | |
| 1,000 | —36.0 | |

CROSS-SECTION No. 40.

No. 23 of 1887.

| | | |
|---|---|---|
| 0 | -------- | Origin: Lat. 41° 48′ 29″.8 |
| 20 | 29.6 | Long. 69° 56′ 15″.9 |
| 25 | 34.8 | Azimuth, 258° 52′ |
| 40 | 13.8 | |
| 60 | 9.5 | |
| 71 | 10.6 | |

CROSS-SECTION No. 40—Continued.

No. 23 of 1887.

| Distance from origin. | Height above or below mean sea-level. | Remarks. |
|---|---|---|
| *Metres.* | *Feet.* | |
| 86 | 7.6 | |
| 100 | 5.8 | |
| 120 | 4.5 | |
| 135 | — 1.6 | |
| 200 | —13.5 | |
| 300 | —15.0 | |
| 400 | —10.5 | |
| 500 | —16.0 | |
| 600 | —22.0 | |
| 700 | —25.0 | |
| 800 | —29.0 | |
| 900 | —33.0 | |
| 1,000 | —36.5 | |

CROSS-SECTION No. 41.

No. 24 of 1887.

| | | |
|---|---|---|
| 0 | 3.0 | Origin: Lat. 41° 48′ 39″.2 |
| 20 | 12.1 | Long. 69° 56′ 19″.2 |
| 40 | 16.0 | Azimuth, 258° 52′ |
| 60 | 22.9 | |
| 80 | 32.2 | |
| 100 | 16.6 | |
| 120 | 8.5 | |
| 140 | 10.3 | |
| 152 | 6.9 | |
| 160 | 2.9 | |
| 170 | — 1.0 | |
| 200 | — 7.5 | |
| 300 | —14.0 | |
| 400 | —12.5 | |
| 500 | —15.5 | |
| 600 | —21.5 | |
| 700 | —26.0 | |
| 800 | —29.0 | |
| 900 | —33.5 | |
| 1,000 | —38.0 | |

*Cross-Sections of the Shore of Cape Cod, etc.*—Continued.

CROSS-SECTION No. 42.

No. 25 of 1887.

| Distance from origin. | Height above or below mean sea-level. | Remarks. |
|---|---|---|
| *Metres.* | *Feet.* | |
| 0 | ---------- | Origin: Lat. 41° 48′ 48″.8 |
| 60 | 12.2 | Long. 69° 56′ 20″.8 |
| 80 | 17.0 | Azimuth, 258° 52′ |
| 100 | 8.2 | |
| 120 | — 1.7 | |
| 136 | — 0.4 | |
| 200 | — 6.0 | |
| 300 | —17.0 | |
| 400 | —10.0 | |
| 500 | —14.5 | |
| 600 | —21.0 | |
| 700 | —25.5 | |
| 800 | —30.0 | |
| 900 | —33.5 | |

CROSS-SECTION No. 43.

No. 26 of 1887.

| | | |
|---|---|---|
| 0 | ---------- | Origin: Lat. 41° 48′ 58″.3 |
| 100 | 41.4 | Long. 69° 56′ 23″.3 |
| 120 | 12.6 | Azimuth, 258° 52′ |
| 129 | 9.3 | |
| 140 | 4.3 | |
| 160 | — 3.6 | |
| 200 | — 5.5 | |
| 300 | —14.5 | |
| 400 | —13.5 | |
| 500 | —18.0 | |
| 600 | —22.0 | |
| 700 | —24.5 | |
| 800 | —27.5 | |
| 900 | —30.0 | |
| 1,000 | —34.0 | |

CROSS-SECTION No. 44.

No. 27 of 1887.

| | | |
|---|---|---|
| 0 | — 0.4 | Origin: Lat. 41° 49′ 07″.9 |
| 20 | 1.7 | Long. 69° 56′ 25″.7 |
| 40 | 6.2 | Azimuth, 258° 52′ |
| 60 | 17.2 | |
| 80 | 24.7 | |

CROSS-SECTION No. 44—Continued.

No. 27 of 1887.

| Distance from origin. | Height above or below mean sea-level. | Remarks. |
|---|---|---|
| *Metres.* | *Feet.* | |
| 100 | 37.2 | |
| 109 | 40.6 | |
| 120 | 23.0 | |
| 140 | 7.8 | |
| 160 | 9.4 | |
| 180 | 5.0 | |
| 200 | — 2.5 | |
| 300 | —13.5 | |
| 400 | —11.0 | |
| 500 | —16.0 | |
| 600 | —22.0 | |
| 700 | —24.0 | |
| 800 | —28.0 | |
| 900 | —33.0 | |

CROSS-SECTION No. 45.

No. 28 of 1887.

| | | |
|---|---|---|
| 0 | ---------- | Origin: Lat. 41° 49′ 17″.3 |
| 100 | 18.6 | Long. 69° 56′ 28″.1 |
| 120 | 31.4 | Azimuth, 258° 52′ |
| 140 | 7.8 | |
| 160 | 9.8 | |
| 180 | 3.5 | |
| 195 | — 3.2 | |
| 300 | —12.5 | |
| 400 | —14.0 | |
| 500 | —17.5 | |
| 600 | —23.5 | |
| 700 | —28.0 | |
| 800 | —31.0 | |
| 900 | —34.0 | |
| 950 | —35.0 | |

CROSS-SECTION No. 46.

No. 29 of 1887.

| | | |
|---|---|---|
| 0 | ---------- | Origin: Lat. 41° 49′ 26″.8 |
| 140 | 20.9 | Long. 69° 56′ 30″.8 |
| 160 | 23.3 | Azimuth, 258° 52′ |
| 169 | 23.2 | |
| 180 | 10.0 | |

*Cross-Sections of the Shore of Cape Cod, etc.*—Continued.

CROSS-SECTION NO. 46—Continued.
No. 29 of 1887.

| Distance from origin. | Height above or below mean sea-level. | Remarks. |
|---|---|---|
| *Metres.* | *Feet.* | |
| 200 | 5.8 | |
| 220 | — 0.7 | |
| 225 | — 2.9 | |
| 300 | —13.0 | |
| 400 | —11.5 | |
| 500 | —18.0 | |
| 600 | —24.0 | |
| 700 | —24.0 | |
| 800 | —25.5 | |
| 900 | —30.0 | |
| 1,000 | —36.0 | |

CROSS-SECTION NO. 47.
No. 30 of 1887.

| | | |
|---|---|---|
| 0 | 5.1 | Origin: Lat. 41° 49′ 36″.1 |
| 20 | 7.6 | Long. 69° 56′ 35″.1 |
| 40 | 10.1 | Azimuth, 258° 52′ |
| 60 | 12.2 | |
| 80 | 3.2 | |
| 100 | 17.4 | |
| 120 | 20.1 | |
| 140 | 22.9 | |
| 160 | 17.5 | |
| 180 | 33.0 | |
| 191 | 28.3 | |
| 200 | 18.1 | |
| 220 | 9.8 | |
| 229 | 10.1 | |
| 240 | 3.8 | |
| 255 | — 3.1 | |
| 300 | —10.5 | |
| 400 | — 8.5 | |
| 500 | —15.0 | |
| 600 | —20.0 | |
| 700 | —22.0 | |
| 800 | —27.0 | |
| 900 | —30.0 | |
| 1,000 | —36.5 | |
| 1,100 | —39.0 | |
| 1,200 | —40.0 | |
| 1,250 | —39.0 | |

CROSS-SECTION NO. 48.
No. 31 of 1887.

| Distance from origin. | Height above or below mean sea-level. | Remarks. |
|---|---|---|
| *Metres.* | *Feet.* | |
| 0 | -------- | Origin: Lat. 41° 49′ 45″.1 |
| 120 | 25.3 | Long. 69° 56′ 35″.7 |
| 140 | 32.4 | Azimuth, 258° 52′ |
| 160 | 33.7 | |
| 180 | 8.0 | |
| 200 | 9.1 | |
| 220 | — 0.2 | |
| 235 | — 4.2 | |
| 300 | — 7.0 | |
| 400 | —11.0 | |
| 500 | —17.5 | |
| 600 | —23.0 | |
| 700 | —23.0 | |
| 800 | —24.5 | |
| 900 | —27.5 | |
| 1,000 | —32.0 | |
| 1,100 | —35.0 | |

CROSS-SECTION NO. 49.
No. 32 of 1887.

| | | |
|---|---|---|
| 0 | -------- | Origin: Lat. 41° 49′ 54″.7 |
| 120 | 34.5 | Long. 69° 56′ 38″.1 |
| 140 | 30.9 | Azimuth, 258° 52′ |
| 160 | 12.0 | |
| 200 | 5.3 | |
| 220 | — 2.9 | |
| 300 | —12.0 | |
| 400 | —10.5 | |
| 500 | —19.0 | |
| 600 | —23.0 | |
| 700 | —22.0 | |
| 800 | —27.0 | |
| 900 | —31.0 | |
| 1,000 | —36.0 | |
| 1,100 | —40.0 | |
| 1,200 | —39.0 | |

CROSS-SECTION NO. 50.
No. 33 of 1887.

| | | |
|---|---|---|
| 0 | 1.6 | Origin: Lat. 41° 50′ 04″.2 |
| 20 | 7.1 | Long. 69° 56′ 41″.4 |

*Cross-Sections of the Shore of Cape Cod, etc.*—Continued.

CROSS-SECTION No. 50—Continued.

No. 33 of 1887.

| Distance from origin. | Height above or below mean sea-level. | Remarks. |
|---|---|---|
| *Metres.* | *Feet.* | |
| 40 | 11.8 | Azimuth, 258° 52′ |
| 60 | 12.8 | |
| 80 | 17.0 | |
| 100 | 24.1 | |
| 120 | 12.5 | |
| 140 | 6.7 | |
| 160 | 9.0 | |
| 180 | 27.1 | |
| 200 | 9.8 | |
| 213 | 8.2 | |
| 220 | 7.0 | |
| 240 | — 1.7 | |
| 300 | —10.0 | |
| 400 | —10.5 | |
| 500 | —16.5 | |
| 600 | —22.0 | |
| 700 | —24.0 | |
| 800 | —24.0 | |
| 900 | —29.0 | |
| 1,000 | —33.5 | |
| 1,100 | —33.5 | |
| 1,200 | —35.0 | |
| 1,300 | —38.0 | |

CROSS-SECTION No. 51.

No. 34 of 1887.

| | | |
|---|---|---|
| 0 | -------- | Origin: Lat. 41° 50′ 13″.0 |
| 100 | 25.0 | Long. 69° 56′ 43″.0 |
| 120 | 27.7 | Azimuth, 258° 52′ |
| 140 | 36.6 | |
| 160 | 15.2 | |
| 180 | 9.7 | |
| 200 | 0.6 | |
| 210 | — 2.6 | |
| 300 | —12.0 | |
| 400 | —12.0 | |
| 500 | —23.0 | |
| 600 | —25.0 | |
| 700 | —26.0 | |
| 800 | —27.0 | |
| 900 | —29.0 | |
| 1,000 | —36.0 | |

CROSS-SECTION No. 52.

No. 35 of 1887.

| Distance from origin. | Height above or below mean sea-level. | Remarks. |
|---|---|---|
| *Metres.* | *Feet.* | |
| 0 | -------- | Origin: Lat. 41° 50′ 22″.7 |
| 100 | 23.4 | Long. 69° 56′ 45″.1 |
| 120 | 24.4 | Azimuth, 258° 52′ |
| 140 | 28.3 | |
| 160 | 11.0 | |
| 180 | 10.8 | |
| 200 | 1.7 | |
| 210 | — 2.7 | |
| 300 | —11.5 | |
| 400 | —11.5 | |
| 500 | —18.5 | |
| 600 | —23.0 | |
| 700 | —25.0 | |
| 800 | —27.0 | |
| 900 | —34.0 | |
| 975 | —38.0 | |

CROSS-SECTION No. 53.

No. 35*a* of 1887.

| | | |
|---|---|---|
| 0 | 2.8 | Origin: Lat. 41° 50′ 32″.3 |
| 20 | 4.0 | Long. 69° 56′ 48″.5 |
| 40 | 4.2 | Azimuth, 258° 52′ |
| 60 | 9.3 | |
| 80 | 11.8 | |
| 100 | 19.6 | |
| 120 | 24.1 | |
| 140 | 30.0 | |
| 160 | 31.3 | |
| 180 | 10.2 | |
| 200 | 9.8 | |
| 220 | 0.3 | |
| 300 | —10.0 | |
| 400 | —13.0 | |
| 500 | —23.0 | |
| 600 | —24.0 | |
| 700 | —26.0 | |
| 800 | —29.0 | |
| 900 | —31.5 | |
| 1,000 | —34.5 | |

*Cross-Sections of the Shore of Cape Cod, etc.*—Continued.

CROSS SECTION No. 54.

No. 36 of 1887.

| Distance from origin. | Height above or below mean sea-level. | Remarks. |
|---|---|---|
| *Metres.* | *Feet.* | |
| 0 | -------- | Origin: Lat. 41° 50′ 41″.8 |
| 20 | -------- | Long. 69° 56′ 50″.4 |
| 40 | -------- | Azimuth, 258° 52′ |
| 60 | -------- | |
| 80 | 33.1 | |
| 100 | 40.7 | |
| 120 | 38.2 | |
| 140 | 10.6 | |
| 160 | 8.4 | |
| 173 | 9.5 | |
| 196 | — 3.2 | |
| 200 | — 5.0 | |
| 300 | — 9.5 | |
| 400 | —16.0 | |
| 500 | —21.5 | |
| 600 | —24.0 | |
| 700 | —24.0 | |
| 800 | —26.0 | |
| 900 | —30.0 | |
| 1,000 | —34.0 | |

CROSS-SECTION No. 55.

No. 37 of 1887.

| | | |
|---|---|---|
| 0 | 37.1 | Origin: Lat. 41° 50′ 51″.4 |
| 20 | 20.1 | Long. 69° 56′ 53″.4 |
| 40 | 20.8 | Azimuth, 258° 52′ |
| 60 | 20.8 | |
| 80 | 24.8 | |
| 100 | 30.1 | |
| 120 | 31.4 | |
| 140 | 13.1 | |
| 160 | 8.2 | |
| 180 | 9.7 | |
| 200 | — 2.8 | |
| 300 | — 6.5 | |
| 400 | —14.0 | |
| 500 | —20.0 | |
| 600 | —22.5 | |
| 700 | —24.5 | |
| 800 | —29.0 | |
| 900 | —37.0 | |
| 1,000 | —36.0 | |

CROSS-SECTION No. 56.

No. 38 of 1887.

| Distance from origin. | Height above or below mean sea-level. | Remarks. |
|---|---|---|
| *Metres.* | *Feet.* | |
| 0 | 53.8 | Origin: Lat. 41° 51′ 00″.8 |
| 20 | 49.0 | Long. 69° 56′ 58″.0 |
| 40 | 47.5 | Azimuth, 258° 52′ |
| 60 | 44.3 | |
| 80 | 39.3 | |
| 100 | 38.1 | |
| 120 | 32.1 | |
| 140 | 27.4 | |
| 160 | 28.4 | |
| 180 | 11.4 | |
| 210 | — 0.8 | |
| 300 | —12.0 | |
| 400 | —10.0 | |
| 500 | —19.5 | |
| 600 | —23.0 | |
| 700 | —25.5 | |
| 800 | —28.0 | |
| 900 | —32.0 | |

CROSS-SECTION No. 57.

No. 39 of 1887.

| | | |
|---|---|---|
| 0 | 57.0 | Origin: Lat. 41° 51′ 10″.0 |
| 20 | 60.5 | Long. 69° 56′ 04″.2 |
| 40 | 60.8 | Azimuth, 258° 52′ |
| 60 | 64.7 | |
| 80 | 66.2 | |
| 100 | 63.6 | |
| 120 | 55.5 | |
| 140 | 54.8 | |
| 160 | 47.2 | |
| 180 | 38.2 | |
| 200 | 42.6 | |
| 220 | 44.4 | |
| 240 | 10 5 | |
| 260 | 10.1 | |
| 285 | — 1.6 | |
| 300 | — 1.5 | |
| 400 | — 7.5 | |
| 500 | —15.0 | |
| 600 | —22.0 | |
| 700 | —23.5 | |

*Cross-Sections of the Shore of Cape Cod, etc.*—Continued.

CROSS-SECTION No. 57—Continued.

No. 39 of 1887.

| Distance from origin. | Height above or below mean sea-level. | Remarks. |
|---|---|---|
| *Metres.* | *Feet.* | |
| 800 | —25.0 | |
| 900 | —26.5 | |
| 1,000 | —28.0 | |
| 1,100 | —30.5 | |

CROSS-SECTION No. 58.

No. 40 of 1887.

| Distance from origin. | Height above or below mean sea-level. | Remarks. |
|---|---|---|
| 0 | 55.0 | Origin: Lat. 41° 51′ 19″.9 |
| 20 | 58.0 | Long. 69° 57′ 04″.2 |
| 40 | 66.8 | Azimuth, 258° 52′ |
| 60 | 51.4 | |
| 80 | 45.4 | |
| 100 | 42.6 | |
| 120 | 42.4 | |
| 140 | 13.3 | |
| 160 | 13.8 | |
| 180 | 5.7 | |
| 200 | — 1.3 | |
| 300 | — 5.0 | |
| 400 | —13.5 | |
| 500 | —23.5 | |
| 600 | —25.0 | |
| 700 | —25.0 | |
| 800 | —28.0 | |
| 900 | —33.0 | |

CROSS-SECTION No. 59.

No. 41 of 1887.

| Distance from origin. | Height above or below mean sea-level. | Remarks. |
|---|---|---|
| 0 | 27.6 | Origin: Lat. 41° 51′ 30″.0 |
| 20 | 26.9 | Long. 69° 57′ 03″.4 |
| 40 | 22.2 | Azimuth, 258° 52′ |
| 60 | 22.2 | |
| 65 | 13.7 | |
| 90 | 0.2 | |
| 200 | —11.0 | |
| 300 | —17.0 | |
| 400 | —25.0 | |
| 500 | —26.0 | |
| 600 | —25.0 | |
| 700 | —28.0 | |
| 800 | —35.0 | |

CROSS-SECTION No. 60.

No. 1 of 1888.

| Distance from origin. | Height above or below mean sea-level. | Remarks. |
|---|---|---|
| *Metres.* | *Feet.* | |
| 0 | 69.7 | Origin: Lat. 41° 51′ 38″.6 |
| | | Long. 69° 57′ 06″.3 |
| | | Azimuth, 256° 58′ |
| 26 | 70.0 | Foot of Nausett Center L. H. |
| 45 | 65.0 | Bluff station. |
| 48 | 63.3 | Edge of bluff. |
| 73 | 13.5 | Foot of bluff. |
| 80 | 10.9 | Beach station. |
| 88 | 9.2 | Crest of beach. |
| 117 | — 2.1 | |
| 200 | — 8.0 | |
| 300 | —15.0 | |
| 400 | —24.0 | |
| 500 | —22.0 | |
| 600 | —25.0 | |
| 700 | —29.0 | |
| 800 | —33.0 | |
| 900 | —38.0 | |
| 1,000 | —42.0 | |

CROSS-SECTION No. 61.

No. 3 of 1888.

| Distance from origin. | Height above or below mean sea-level. | Remarks. |
|---|---|---|
| 0 | 63.8 | Origin: Lat. 41° 51′ 47″.8 |
| 20 | 70.8 | Long. 69° 57′ 10″.0 |
| 40 | 81.7 | Azimuth, 257° 03′ |
| 60 | 84.9 | Bluff station. |
| 94 | 9.3 | Foot of bluff. |
| 95 | 9.8 | Crest of beach. |
| 100 | 7.6 | Beach station. |
| 119 | — 2.0 | |
| 200 | — 8.0 | |
| 300 | —12.0 | |
| 400 | —21.0 | |
| 500 | —22.5 | |
| 600 | —21.0 | |
| 700 | —26.0 | |
| 800 | —29.0 | |
| 900 | —34.0 | |
| 1,000 | —40.0 | |
| 1,050 | —40.0 | |

*Cross Sections of the Shore of Cape Cod, etc.*—Continued.

CROSS-SECTION No. 62.

No. 5 of 1888.

| Distance from origin. | Height above or below mean sea-level. | Remarks. |
|---|---|---|
| *Metres.* | *Feet.* | |
| 0 | 59.9 | Origin: Lat. 41° 51′ 57″.0 |
| 20 | 73.0 | Long. 69° 57′ 13″.3 |
| 40 | 77.0 | Azimuth, 257° 04′ |
| 60 | 81.4 | Bluff station. |
| 91 | 12.7 | Foot of bluff. |
| 110 | 12.0 | Beach station. |
| 119 | 10.0 | Crest of beach. |
| 143 | — 1.3 | |
| 200 | — 7.0 | |
| 300 | —10.5 | |
| 400 | —21.0 | |
| 500 | —22.0 | |
| 600 | —20.0 | |
| 700 | —24.0 | |
| 800 | —29.0 | |
| 900 | —34.0 | |
| 1,000 | —38.0 | |

CROSS-SECTION No. 63.

No. 7 of 1888.

| | | |
|---|---|---|
| 0 | 76.1 | Origin: Lat. 41° 52′ 06″.8 |
| 20 | 77.5 | Long. 69° 57′ 16″.7 |
| 40 | 80.8 | Azimuth, 256° 13′ |
| 60 | 83.6 | Bluff station. |
| 102 | 14.6 | Foot of bluff. |
| 103 | 9.8 | Crest of beach. |
| 110 | 7.7 | |
| 131 | — 2.3 | |
| 200 | — 4.5 | |
| 300 | —14.5 | |
| 400 | —22.0 | |
| 500 | —22.5 | |
| 600 | —22.5 | |
| 700 | —26.0 | |
| 800 | —30.0 | |
| 900 | —36.5 | |
| 925 | —38.5 | |

CROSS-SECTION No. 64.

No. 9 of 1888.

| Distance from origin. | Height above or below mean sea-level. | Remarks. |
|---|---|---|
| *Metres.* | *Feet.* | |
| 0 | 73.4 | Origin: Lat. 41° 52′ 16″.0 |
| 20 | 75.5 | Long. 69° 57′ 19″.8 |
| 40 | 79.2 | Azimuth, 256° 06′ |
| 60 | 84.4 | At bluff station. |
| 92 | 15.4 | At foot of bluff. |
| 110 | 11.5 | At beach station. |
| 119 | 9.5 | At crest of beach. |
| 140 | — 4.3 | |
| 200 | — 6.0 | |
| 300 | —10.0 | |
| 400 | —20.0 | |
| 500 | —24.0 | |
| 600 | —22.0 | |
| 700 | —27.0 | |
| 800 | —29.5 | |
| 900 | —33.0 | |
| 1,000 | —38.0 | |

CROSS-SECTION No. 65.

No. 11 of 1888.

| | | |
|---|---|---|
| 0 | 73.9 | Origin: Lat. 41° 52′ 25″.5 |
| 20 | 72.1 | Long. 69° 57′ 23″.7 |
| 40 | 71.9 | Azimuth, 256° 10′ |
| 60 | 74.4 | |
| 80 | 78.2 | At bluff station. |
| 117 | 15.7 | At foot of bluff. |
| 129 | 11.5 | At beach station. |
| 142 | 9.8 | At crest of beach. |
| 164 | — 1.6 | |
| 200 | — 4.5 | |
| 300 | — 9.0 | |
| 400 | —20.0 | |
| 500 | —22.5 | |
| 600 | —23.0 | |
| 700 | —25.0 | |
| 800 | —28.0 | |
| 900 | —36.0 | |
| 975 | —40.0 | |

*Cross-Sections of the Shore of Cape Cod, etc.*—Continued.

CROSS-SECTION No. 66.

No. 13 of 1888.

| Distance from origin. | Height above or below mean sea-level. | Remarks. |
|---|---|---|
| *Metres.* | *Feet.* | |
| 0 | 64.8 | Origin: Lat. 41° 52′ 34″.8 |
| 20 | 65.6 | Long. 69° 57′ 26″.8 |
| 40 | 70.1 | Azimuth, 256° 07′ |
| 57 | 74.1 | |
| 60 | 70.1 | |
| 80 | 59.6 | |
| 117 | 21.2 | At foot of bluff. |
| 120 | 12.5 | At crest of beach. |
| 125 | 9.4 | At beach station. |
| 150 | — 0.8 | |
| 200 | — 7.0 | |
| 300 | —12.0 | |
| 400 | —18.0 | |
| 500 | —21.0 | |
| 600 | —20.5 | |
| 700 | —23.0 | |
| 800 | —27.0 | |
| 900 | —33.0 | |
| 1,000 | —37.5 | |
| 1,040 | —40.5 | |

CROSS-SECTION No. 67.

No. 15 of 1888.

| | | |
|---|---|---|
| 0 | 69.7 | Origin: Lat. 41° 52′ 44″.1 |
| 20 | 70.4 | Long. 69° 57′ 29″.5 |
| 40 | 72.7 | Azimuth, 256° 10′ |
| 60 | 77.2 | |
| 80 | 77.5 | At bluff station. |
| 118 | 22.0 | At foot of bluff and beach station. |
| 123 | 9.7 | At crest of beach. |
| 154 | — 0.9 | |
| 200 | — 5.5 | |
| 300 | — 8.0 | |
| 400 | —18.0 | |
| 500 | —19.0 | |
| 600 | —21.5 | |
| 700 | —23.5 | |

CROSS-SECTION No. 67—Continued.

No. 15 of 1888.

| Distance from origin. | Height above or below mean sea-level. | Remarks. |
|---|---|---|
| *Metres.* | *Feet.* | |
| 800 | —33.0 | |
| 900 | —34.5 | |
| 1,000 | —37.5 | |
| 1,020 | —39.0 | |

CROSS-SECTION No. 68.

No. 17 of 1888.

| | | |
|---|---|---|
| 0 | 67.1 | Origin: Lat. 41° 52′ 53″.2 |
| 20 | 66.2 | Long. 69° 57′ 34″.6 |
| 40 | 68.2 | Azimuth, 256° 14′ |
| 60 | 70.6 | |
| 80 | 66.4 | |
| 100 | 66.5 | |
| 120 | 66.3 | At bluff station. |
| 158 | 14.6 | At beach station. |
| 220 | — 4.0 | |
| 300 | — 6.0 | |
| 400 | —17.5 | |
| 500 | —20.0 | |
| 600 | —20.0 | |
| 700 | —22.0 | |
| 800 | —28.5 | |
| 900 | —34.0 | |
| 1,000 | —36.5 | |
| 1,050 | —40.5 | |

CROSS-SECTION No. 69.

No. 19 of 1888.

| | | |
|---|---|---|
| 0 | 64.8 | Origin: Lat. 41° 53′ 03″.1 |
| 20 | 65.2 | Long. 69° 57′ 37″.5 |
| 40 | 65.8 | Azimuth, 256° 10′ |
| 60 | 65.6 | |
| 80 | 65.8 | |
| 100 | 74.4 | |
| 120 | 69.6 | At bluff station. |
| 151 | 8.2 | At beach station. |
| 200 | — 5.5 | |

*Cross Sections of the Shore of Cape Cod, etc.*—Continued.

CROSS-SECTION No. 69—Continued.

No. 19 of 1888.

| Distance from origin. | Height above or below mean sea-level. | Remarks. |
|---|---|---|
| *Metres.* | *Feet.* | |
| 300 | — 9.0 | |
| 400 | —14.5 | |
| 500 | —22.5 | |
| 600 | —19.0 | |
| 700 | —22.0 | |
| 800 | —28.0 | |
| 900 | —33.5 | |
| 1,000 | —38.5 | |

CROSS-SECTION No. 70.

No. 21 of 1888.

| | | |
|---|---|---|
| 0 | 70.9 | Origin: Lat. 41° 53′ 12″.5 |
| 20 | 74.2 | Long. 69° 57′ 40″.0 |
| 40 | 69.6 | Azimuth, 256° 07′ |
| 60 | 69.1 | |
| 80 | 68.1 | |
| 100 | 62.4 | At bluff station. |
| 132 | 12.2 | At foot of bluff. |
| 146 | 11.7 | At beach station. |
| 157 | 9.6 | At crest of beach. |
| 181 | — 1.8 | |
| 200 | — 5.0 | |
| 300 | — 8.0 | |
| 400 | —19.5 | |
| 500 | —27.0 | |
| 600 | —20.5 | |
| 700 | —22.0 | |
| 800 | —27.0 | |
| 900 | —33.0 | |
| 1,000 | —36.0 | |
| 1,040 | —39.0 | |

CROSS-SECTION No. 71.

No. 23 of 1888.

| | | |
|---|---|---|
| 0 | 61.7 | Origin: Lat. 41° 53′ 21″.8 |
| 20 | 57.7 | Long. 69° 57′ 44″.5 |
| 40 | 57.1 | Azimuth, 256° 00′ |
| 60 | 55.4 | |
| 80 | 59.7 | |

CROSS-SECTION No. 71—Continued.

No. 23 of 1888.

| Distance from origin. | Height above or below mean sea-level. | Remarks. |
|---|---|---|
| *Metres.* | *Feet.* | |
| 100 | 63.0 | |
| 120 | 63.4 | At bluff station. |
| 150 | 10.6 | At foot of bluff. |
| 160 | 5.4 | |
| 170 | -------- | At beach station. |
| 172 | — 0.5 | |
| 200 | — 6.0 | |
| 300 | —10.0 | |
| 400 | —15.0 | |
| 500 | —22.0 | |
| 600 | —21.0 | |
| 700 | —23.0 | |
| 800 | —28.5 | |
| 900 | —36.0 | |
| 920 | —37.0 | |

CROSS-SECTION No. 72.

No. 25 of 1888.

| | | |
|---|---|---|
| 0 | 49.8 | Origin: Lat. 41° 53′ 30″.9 |
| 20 | 50.2 | Long. 69° 57′ 49″.0 |
| 40 | 51.5 | Azimuth, 256° 03′ |
| 60 | 52.6 | |
| 80 | 52.5 | |
| 100 | 52.8 | |
| 120 | 54.2 | |
| 140 | 54.6 | |
| 160 | 55.5 | At bluff station. |
| 187 | 10.2 | At foot of bluff. |
| 201 | 8.7 | |
| 207 | 7.5 | At beach station. |
| 223 | — 0.7 | |
| 300 | — 8.0 | |
| 400 | — 9.0 | |
| 500 | —19.0 | |
| 600 | —20.0 | |
| 700 | —22.0 | |
| 800 | —25.0 | |
| 900 | —30.0 | |
| 1,000 | —37.0 | |
| 1,020 | —38.0 | |

*Cross-Sections of the Shore of Cape Cod, etc.*—Continued.

CROSS-SECTION NO. 73.

No. 27 of 1888.

| Distance from origin. | Height above or below mean sea-level. | Remarks. |
|---|---|---|
| *Metres.* | *Feet.* | |
| 0 | 58.5 | Origin: Lat. 41° 53′ 39″.9 |
| 20 | 58.9 | Long. 69° 57′ 52″.7 |
| 40 | 58.6 | Azimuth, 253° 39′ |
| 60 | 58.4 | |
| 80 | 57.8 | |
| 100 | 56.5 | |
| 120 | 55.4 | |
| 140 | 54.6 | |
| 160 | 53.6 | At bluff station. |
| 191 | 13.3 | At foot of bluff. |
| 211 | 11.4 | At beach station. |
| 220 | 9.5 | |
| 241 | — 0.9 | |
| 300 | — 6.5 | |
| 400 | —13.0 | |
| 500 | —20.5 | |
| 600 | —21.0 | |
| 700 | —20.5 | |
| 800 | —25.0 | |
| 900 | —29.5 | |
| 1,000 | —36.0 | |
| 1,020 | —38.0 | |

CROSS-SECTION NO. 74.

No. 29 of 1888.

| | | |
|---|---|---|
| 0 | 57.3 | Origin: Lat. 41° 53′ 49″.2 |
| 20 | 54.7 | Long. 69° 57′ 56″.1 |
| 40 | 51.2 | Azimuth, 253° 34′ |
| 60 | 54.7 | |
| 80 | 48.9 | |
| 100 | 51.2 | |
| 120 | 53.6 | |
| 140 | 55.2 | |
| 160 | 56.3 | At bluff station. |
| 190 | 12.7 | At foot of bluff. |
| 210 | 8.5 | At beach station. |
| 224 | — 2.0 | |
| 300 | — 8.0 | |
| 400 | —10.0 | |

CROSS-SECTION NO. 74—Continued.

No. 29 of 1888.

| Distance from origin. | Height above or below mean sea-level. | Remarks. |
|---|---|---|
| *Metres.* | *Feet.* | |
| 500 | —20.0 | |
| 600 | —21.5 | |
| 700 | —20.0 | |
| 800 | —24.5 | |
| 900 | —33.0 | |
| 1,000 | —38.5 | |

CROSS-SECTION NO. 75.

No. 31 of 1888.

| | | |
|---|---|---|
| 0 | 43.2 | Origin: Lat. 41° 53′ 58″.4 |
| 20 | 42.4 | Long. 69° 58′ 00″.7 |
| 40 | 42.6 | Azimuth, 253° 35′ |
| 60 | 43.7 | |
| 80 | 44.9 | |
| 100 | 45.3 | |
| 120 | 45.0 | |
| 140 | 44.2 | |
| 160 | 43.2 | |
| 180 | 42.5 | At bluff station. |
| 203 | 10.3 | At foot of bluff. |
| 213 | 4.7 | At crest of beach. |
| 223 | 0.1 | |
| 225 | -------- | At beach station. |
| 300 | — 8.5 | |
| 400 | — 9.0 | |
| 500 | —19.0 | |
| 600 | —21.0 | |
| 700 | —21.0 | |
| 800 | —24.0 | |
| 900 | —30.0 | |
| 1,000 | —33.0 | |
| 1,100 | —39.5 | |

CROSS-SECTION NO. 76.

No. 33 of 1888.

| | | |
|---|---|---|
| 0 | 50.1 | Origin: Lat. 41° 54′ 07″.5 |
| 20 | 50.6 | Long. 69′ 58′ 06″.3 |
| 40 | 50.1 | Azimuth, 253° 20′ |

*Cross-Sections of the Shore of Cape Cod, etc.*—Continued.

CROSS-SECTION No. 76—Continued.

No. 33 of 1888.

| Distance from origin. | Height above or below mean sea-level. | Remarks. |
|---|---|---|
| *Metres.* | *Feet.* | |
| 60 | 49.0 | |
| 80 | 47.7 | |
| 100 | 47.4 | |
| 120 | 47.5 | |
| 140 | 48.0 | |
| 160 | 48.5 | |
| 180 | 50.4 | |
| 200 | 50.6 | |
| 220 | 50.4 | At bluff station. |
| 256 | 15.1 | At foot of bluff. |
| 267 | 5.8 | |
| 271 | -------- | At beach station. |
| 279 | 0.8 | |
| 300 | -------- | |
| 400 | —12.0 | |
| 500 | —14.0 | |
| 600 | —23.0 | |
| 700 | —22.5 | |
| 800 | —22.0 | |
| 900 | —26.0 | |
| 1,000 | —33.0 | |
| 1,100 | —38.0 | |

CROSS-SECTION No. 77.

No. 35 of 1888.

| | | |
|---|---|---|
| 0 | 48.4 | Origin: Lat. 41° 54′ 17″.1 |
| 20 | 48.0 | Long. 69° 58′ 10″.5 |
| 40 | 48.6 | Azimuth, 253° 43′ |
| 60 | 48.7 | |
| 80 | 49.1 | |
| 100 | 48.8 | |
| 120 | 49.1 | |
| 140 | 49.6 | |
| 160 | 49.6 | |
| 180 | 50.7 | |
| 200 | 50.9 | |
| 220 | 51.2 | At bluff station. |
| 276 | 8.1 | |
| 283 | -------- | At beach station. |

CROSS-SECTION No. 77—Continued.

No. 35 of 1888.

| Distance from origin. | Height above or below mean seal-evel. | Remarks. |
|---|---|---|
| *Metres.* | *Feet.* | |
| 300 | — 6.0 | |
| 400 | — 8.0 | |
| 500 | —14.5 | |
| 600 | —22.5 | |
| 700 | —24.5 | |
| 800 | —23.5 | |
| 900 | —26.5 | |
| 1,000 | —31.0 | |
| 1,100 | —37.0 | |
| 1,130 | —39.5 | |

CROSS-SECTION No. 78.

No. 37 of 1888.

| | | |
|---|---|---|
| 0 | 53.3 | Origin: Lat. 41° 54′ 26″.2 |
| 20 | 54.9 | Long. 69° 58′ 10″.5 |
| 40 | 55.4 | Azimuth, 253° 32′ |
| 60 | 55.1 | |
| 80 | 55.0 | |
| 100 | 55.6 | |
| 120 | 56.0 | |
| 140 | 56.1 | |
| 160 | 56.3 | |
| 180 | 56.4 | |
| 200 | 56.2 | |
| 220 | 55.9 | At bluff station. |
| 250 | 11.3 | At foot of bluff. |
| 272 | 11.3 | |
| 278 | 11.3 | At crest of beach. |
| 280 | -------- | At beach station. |
| 305 | — 2.1 | |
| 400 | — 8.0 | |
| 500 | —14.0 | |
| 600 | —23.5 | |
| 700 | —24.5 | |
| 800 | —24.5 | |
| 900 | —26.0 | |
| 1,000 | —32.0 | |
| 1,100 | —40.0 | |

*Cross-Sections of the Shore of Cape Cod, etc.*—Continued.

CROSS-SECTION NO. 79.

No. 39 of 1888.

| Distance from origin. | Height above or below mean sea-level. | Remarks. |
|---|---|---|
| *Metres.* | *Feet.* | |
| 0 | 67.7 | Origin: Lat. 41° 54′ 35″.5 |
| 20 | 68.4 | Long. 69° 58′ 17″.6 |
| 40 | 68.9 | Azimuth, 253° 34′ |
| 60 | 67.3 | |
| 80 | 63.5 | |
| 100 | 58.5 | |
| 120 | 63.4 | |
| 140 | 59.0 | |
| 160 | 59.4 | |
| 180 | 60.8 | |
| 200 | 61.8 | |
| 220 | 62.2 | At bluff station. |
| 254 | 11.8 | At foot of bluff. |
| 279 | 11.3 | At beach station. |
| 285 | 11.8 | At crest of beach. |
| 322 | — 2.9 | |
| 400 | — 7.0 | |
| 500 | —17.0 | |
| 600 | —23.0 | |
| 700 | —23.5 | |
| 800 | —23.0 | |
| 900 | —27.0 | |
| 1,000 | —33.0 | |
| 1,100 | —38.0 | |

CROSS-SECTION NO. 80.

No. 41 of 1888.

| | | |
|---|---|---|
| 0 | 75.7 | Origin: Lat. 41° 54′ 45″.8 |
| 20 | 70.3 | Long. 69° 58′ 15″.4 |
| 40 | 68.8 | Azimuth, 253° 43′ |
| 60 | 67.9 | |
| 80 | 67.3 | |
| 100 | 66.2 | |
| 120 | 65.0 | At bluff station. |
| 156 | 6.6 | At beach station. |
| 200 | — 6.0 | |
| 300 | —12.5 | |
| 400 | —14.0 | |
| 500 | —22.0 | |
| 600 | —23.0 | |

CROSS-SECTION NO. 80—Continued.

No. 41 of 1888.

| Distance from origin. | Height above or below mean sea-level. | Remarks. |
|---|---|---|
| *Metres.* | *Feet.* | |
| 700 | —24.5 | |
| 800 | —29.0 | |
| 900 | —37.0 | |
| 950 | —39.0 | |

CROSS-SECTION NO. 81.

No. 42 of 1888.

| | | |
|---|---|---|
| 0 | 100.0 | Origin: Lat. 41° 54′ 49″.5 |
| 60 | 85.5 | Long. 69° 58′ 21″.6 |
| 80 | 84.8 | Azimuth, 253° 34′ |
| 100 | 84.8 | |
| 120 | 84.3 | |
| 140 | 84.0 | |
| 160 | 84.2 | |
| 180 | 84.0 | |
| 200 | 82.9 | At bluff station. |
| 242 | 12.1 | At foot of bluff. |
| 245 | 12.0 | At beach station. |
| 248 | 11.1 | At crest of beach. |
| 280 | 2.1 | |
| 300 | — 6.0 | |
| 400 | — 7.0 | |
| 500 | —17.0 | |
| 600 | —22.5 | |
| 700 | —22.5 | |
| 800 | —25.5 | |
| 900 | —30.0 | |
| 1,000 | —35.0 | |
| 1,075 | —40.0 | |

CROSS-SECTION NO. 82.

No. 43 of 1888.

| | | |
|---|---|---|
| 0 | 86.2 | Origin: Lat. 41° 54′ 54″.9 |
| 20 | 85.6 | Long. 69° 58′ 24″.5 |
| 40 | 78.2 | Azimuth, 253° 34′ |
| 60 | 78.9 | |
| 80 | 77.6 | |
| 100 | 78.1 | |
| 120 | 78.1 | |

*Cross-Sections of the Shore of Cape Cod, etc.*—Continued.

CROSS-SECTION No. 82—Continued.

No. 43 of 1888.

| Distance from origin. | Height above or below mean sea-level. | Remarks. |
|---|---|---|
| *Metres.* | *Feet.* | |
| 140 | 78.6 | |
| 160 | 79.7 | |
| 180 | 80.7 | |
| 200 | 81.9 | |
| 220 | 82.5 | At bluff station. |
| 260 | 12.6 | At beach station and foot of bluff. |
| 293 | — 1.5 | |
| 300 | — 6.0 | |
| 400 | —11.0 | |
| 500 | —13.0 | |
| 600 | —23.0 | |
| 700 | —22.0 | |
| 800 | —23.0 | |
| 900 | —30.0 | |
| 1,000 | —36.5 | |
| 1,030 | —39.0 | |

CROSS-SECTION No. 83.

No. 44 of 1888.

| Distance from origin. | Height above or below mean sea-level. | Remarks. |
|---|---|---|
| 0 | 95.8 | Origin, at summit: |
| 20 | 92.8 | Lat. 41° 54′ 59″.0 |
| 40 | 88.7 | Long. 69° 58′ 28″.1 |
| 60 | 83.1 | Azimuth, 253° 27′ |
| 80 | 85.2 | |
| 100 | 86.2 | |
| 120 | 87.5 | |
| 140 | 87.6 | |
| 160 | 88.4 | |
| 180 | 88.8 | |
| 200 | 89.2 | |
| 220 | 89.0 | |
| 240 | 89.7 | |
| 260 | 89.2 | At bluff station. |
| 292 | -------- | At foot of bluff. |
| 302 | 11.6 | At beach station. |
| 350 | — 5.0 | |
| 400 | — 9.0 | |
| 500 | —11.0 | |
| 600 | —17.0 | |

CROSS-SECTION No. 83—Continued.

No. 44 of 1888.

| Distance from origin. | Height above or below mean sea-level. | Remarks. |
|---|---|---|
| *Metres.* | *Feet.* | |
| 700 | —19.0 | |
| 800 | —20.5 | |
| 900 | —27.0 | |
| 1,000 | —32.5 | |
| 1,100 | —38.0 | |

CROSS-SECTION No. 84.

No. 45 of 1888.

| Distance from origin. | Height above or below mean sea-level. | Remarks. |
|---|---|---|
| 0 | 52.3 | Origin: Lat. 41° 55′ 05″.1 |
| 20 | 57.1 | Long. 69° 58′ 23″.5 |
| 40 | 58.8 | Azimuth, 253° 27′ |
| 60 | 61.6 | |
| 80 | 64.3 | |
| 100 | 65.6 | At bluff station. |
| 119 | 11.1 | At foot of bluff. |
| 129 | 10.6 | |
| 149 | -------- | At beach station. |
| 169 | 12.1 | At crest of beach. |
| 181 | — 1.7 | |
| 200 | — 5.0 | |
| 300 | — 9.5 | |
| 400 | —16.5 | |
| 500 | —21.5 | |
| 600 | —20.0 | |
| 700 | —24.0 | |
| 800 | —30.0 | |
| 900 | —34.0 | |
| 935 | —36.0 | |

CROSS-SECTION No. 85.

No. 46 of 1888.

| Distance from origin. | Height above or below mean sea-level. | Remarks. |
|---|---|---|
| 0 | 82.5 | Origin: Lat. 41° 55′ 08″.7 |
| 20 | 79.5 | Long. 69° 58′ 30″.4 |
| 40 | 76.7 | Azimuth, 253° 27′ |
| 60 | 68.9 | |
| 80 | 65.2 | |
| 100 | -------- | |
| 120 | 68.7 | |
| 140 | 68.6 | |

*Cross Sections of the Shore of Cape Cod, etc.*—Continued.

CROSS-SECTION No. 85—Continued.

No. 46 of 1888.

| Distance from origin. | Height above or below mean sea-level. | Remarks. |
|---|---|---|
| *Metres.* | *Feet.* | |
| 160 | 68.6 | |
| 180 | 66.2 | |
| 200 | 64.7 | |
| 220 | 64.5 | At bluff station. |
| 245 | -------- | At foot of bluff. |
| 250 | 10.4 | At beach station. |
| 300 | 1.0 | |
| 400 | — 4.0 | |
| 500 | —17.0 | |
| 600 | —22.0 | |
| 700 | —21.5 | |
| 800 | —23.0 | |
| 900 | —27.5 | |
| 1,000 | —32.5 | |
| 1,050 | —37.0 | |

CROSS-SECTION No. 86.

No. 47 of 1888.

| | | |
|---|---|---|
| 0 | 82.6 | Origin: Lat. 41° 55′ 13″.3 |
| 20 | 86.0 | Long. 69° 58′ 32″.1 |
| 40 | 85.4 | Azimuth, 253° 27′ |
| 60 | 89.7 | |
| 80 | 89.2 | |
| 100 | 89.3 | |
| 120 | 90.2 | |
| 140 | 91.0 | |
| 160 | 92.2 | |
| 180 | 92.7 | |
| 200 | 92.7 | At bluff station. |
| 236 | 11.1 | At foot of bluff. |
| 239 | 10.0 | |
| 249 | 10.8 | At crest of beach and beach station. |
| 280 | — 2.8 | |
| 300 | — 5.0 | |
| 400 | —10.0 | |
| 500 | —19.0 | |
| 600 | —24.0 | |
| 700 | —23.0 | |
| 800 | —24.0 | |
| 900 | —28.0 | |
| 1,000 | —33.0 | |
| 1,020 | —34.5 | |

CROSS-SECTION No. 87.

No. 48 of 1888.

| Distance from origin. | Height above or below mean sea-level. | Remarks. |
|---|---|---|
| *Metres.* | *Feet.* | |
| 0 | 51.4 | Origin: Lat. 41° 55′ 18″.5 |
| 20 | 58.3 | Long. 69° 58′ 32″.5 |
| 40 | 58.4 | Azimuth, 253° 27′ |
| 60 | 57.5 | |
| 80 | 59.7 | |
| 100 | 61.6 | |
| 120 | 62.1 | |
| 140 | 62.8 | |
| 160 | 64.0 | At bluff station. |
| 180 | 12.6 | At foot of bluff. |
| 199 | -------- | At beach station. |
| 270 | — 6.0 | |
| 300 | — 7.5 | |
| 400 | —14.5 | |
| 500 | —23.5 | |
| 600 | —25.0 | |
| 700 | —22.5 | |
| 800 | -------- | |
| 900 | —30.5 | |
| 1,000 | —37.0 | |

CROSS-SECTION No. 88.

No. 49 of 1888.

| | | |
|---|---|---|
| 0 | 63.3 | Origin: Lat. 41° 55′ 21″.8 |
| 20 | 60.8 | Long. 69° 58′ 39″.5 |
| 40 | 57.8 | Azimuth, 253° 31′ |
| 60 | 57.7 | |
| 80 | 61.0 | |
| 100 | 63.7 | |
| 120 | 52.6 | |
| 140 | 52.0 | |
| 160 | 45.5 | |
| 180 | 43.5 | |
| 200 | 42.9 | |
| 220 | 41.7 | |
| 240 | 44.1 | |
| 260 | 37.1 | |
| 280 | 35.3 | At bluff station. |
| 295 | 11.9 | At foot of bluff. |
| 305 | 11.2 | |
| 309 | 9.4 | At crest of beach. |

*Cross-Sections of the Shore of Cape Cod, etc.*—Continued.

CROSS-SECTION NO. 88—Continued.

No. 49 of 1888.

| Distance from origin. | Height above or below mean sea-level. | Remarks. |
|---|---|---|
| *Metres.* | *Feet.* | |
| 325 | -------- | At beach station. |
| 357 | — 1.4 | |
| 400 | — 8.0 | |
| 500 | —13.0 | |
| 600 | —23.0 | |
| 700 | —25.0 | |
| 800 | —23.5 | |
| 900 | —25.0 | |
| 1,000 | —28.0 | |
| 1,100 | —35.5 | |

CROSS-SECTION NO. 89.

No. 50 of 1888.

| | | |
|---|---|---|
| 0 | 71.7 | Origin: Lat. 41° 55′ 27″.5 |
| 20 | 65.2 | Long. 69° 58′ 36″.5 |
| 40 | 58.3 | Azimuth, 253° 20′ |
| 60 | 55.9 | |
| 80 | 53.1 | |
| 100 | 50.1 | |
| 120 | 46.5 | |
| 140 | 42.1 | |
| 160 | 44.8 | At bluff station. |
| 190 | 12.7 | At foot of bluff. |
| 210 | -------- | At beach station. |
| 300 | —10.0 | |
| 400 | —12.0 | |
| 500 | —23.0 | |
| 600 | —27.5 | |
| 700 | —24.5 | |
| 800 | —25.0 | |
| 900 | —28.0 | |
| 1,000 | —34.5 | |
| 1,050 | —36.0 | |

CROSS-SECTION NO. 90.

No. 51 of 1888.

| | | |
|---|---|---|
| 0 | 91.3 | Origin: Lat. 41° 55′ 31″.7 |
| 20 | 85.9 | Long. 69° 58′ 40″.4 |
| 40 | 83.1 | Azimuth, 253° 25′ |
| 60 | 86.0 | |

CROSS-SECTION NO. 90—Continued.

No. 51 of 1888.

| Distance from origin. | Height above or below mean sea-level. | Remarks. |
|---|---|---|
| *Metres.* | *Feet.* | |
| 80 | 79.9 | |
| 100 | 75.1 | |
| 120 | 66.5 | |
| 140 | 64.2 | |
| 160 | 67.9 | |
| 180 | 68.8 | |
| 200 | 66.7 | At bluff station. |
| 246 | 12.9 | At foot of bluff. |
| 268 | 11.9 | At beach station. |
| 271 | 11.8 | At crest of beach. |
| 296 | — 1.3 | |
| 300 | — 5.5 | |
| 400 | — 8.0 | |
| 500 | —19.0 | |
| 600 | —24.5 | |
| 700 | —26.5 | |
| 800 | —24.0 | |
| 900 | —27.0 | |
| 1,000 | —31.0 | |
| 1,030 | —36.0 | |

CROSS-SECTION NO. 91.

No. 52 of 1888.

| | | |
|---|---|---|
| 0 | 89.6 | Origin: Lat. 41° 55′ 36″.1 |
| 20 | 85.9 | Long. 69° 58′ 41″.0 |
| 40 | 87.8 | Azimuth, 253° 25′ |
| 60 | 84.7 | |
| 80 | 78.5 | |
| 100 | 73.3 | |
| 120 | 72.7 | |
| 140 | 69.6 | |
| 160 | 71.7 | |
| 180 | 69.3 | At bluff station. |
| 218 | -------- | At foot of bluff. |
| 238 | 11.6 | At beach station. |
| 300 | — 5.0 | |
| 400 | —11.5 | |
| 500 | —22.5 | |
| 600 | —26.5 | |
| 700 | —25.5 | |

*Cross-Sections of the Shore of Cape Cod, etc.*—Continued.

CROSS-SECTION No. 91—Continued.

No. 52 of 1888.

| Distance from origin. | Height above or below mean sea-level. | Remarks. |
|---|---|---|
| *Metres.* | *Feet.* | |
| 800 | —24.0 | |
| 900 | —27.5 | |
| 1,000 | —34.0 | |

CROSS-SECTION No. 92.

No. 53 of 1888.

| Distance from origin. | Height above or below mean sea-level. | Remarks. |
|---|---|---|
| 0 | 52.1 | Origin: Lat. 41° 55′ 40″.8 |
| 20 | 55.9 | Long. 69° 58′ 43″.0 |
| 40 | 39.9 | Azimuth, 253° 20′ |
| 60 | 54.0 | |
| 80 | 50.6 | |
| 100 | 43.9 | |
| 120 | 37.3 | |
| 140 | 30.4 | |
| 160 | 28.8 | |
| 180 | 22.9 | |
| 200 | 25.2 | At bluff station. |
| 217 | 14.0 | At foot of bluff. |
| 219 | 13.6 | |
| 229 | 12.0 | |
| 239 | -------- | At beach station. |
| 279 | — 1.6 | |
| 300 | — 6.0 | |
| 400 | —10.5 | |
| 500 | —22.0 | |
| 600 | —24.5 | |
| 700 | —24.5 | |
| 800 | —25.5 | |
| 900 | —30.0 | |
| 980 | —35.5 | |

CROSS-SECTION No. 93.

No. 55 of 1888.

| Distance from origin. | Height above or below mean sea-level. | Remarks. |
|---|---|---|
| 0 | 58.6 | Origin: Lat. 41° 55′ 49″.6 |
| 2 | 57.8 | Long. 69° 58′ 48″.6 |
| 22 | 51.6 | Azimuth, 251° 35′ |
| 42 | 50.9 | |
| 62 | 46.8 | |
| 82 | 51.8 | |

CROSS-SECTION No. 93—Continued.

No. 55 of 1888.

| Distance from origin. | Height above or below mean sea-level. | Remarks. |
|---|---|---|
| *Metres.* | *Feet.* | |
| 102 | 49.2 | |
| 122 | 47.9 | At bluff station. |
| 159 | 13.3 | At foot of bluff. |
| 164 | 14.8 | |
| 183 | 13.0 | |
| 184 | 12.2 | At beach station. |
| 206 | — 1.4 | |
| 300 | — 6.0 | |
| 400 | — 7.0 | |
| 500 | —15.0 | |
| 600 | —21.0 | |
| 700 | —22.5 | |
| 800 | —23.5 | |
| 900 | —27.0 | |
| 1,000 | —33.0 | |
| 1,050 | —35.0 | |

CROSS-SECTION No. 94.

No. 57 of 1888.

| Distance from origin. | Height above or below mean sea-level. | Remarks. |
|---|---|---|
| 0 | 66.1 | Origin: Lat. 41° 55′ 58″.7 |
| 20 | 76.3 | Long. 69° 58′ 52″.7 |
| 40 | 63.3 | Azimuth, 250° 07′ |
| 60 | 67.0 | |
| 80 | 66.4 | |
| 100 | 64.8 | |
| 120 | 62.1 | |
| 140 | 62.1 | |
| 160 | 71.0 | |
| 180 | 79.9 | |
| 200 | 89.3 | |
| 220 | 83.2 | At bluff station. |
| 275 | 15.1 | At foot of bluff. |
| 278 | 14.4 | At beach station. |
| 299 | 13.0 | At crest of beach. |
| 323 | — 2.7 | |
| 400 | — 8.0 | |
| 500 | —13.5 | |
| 600 | —20.0 | |
| 700 | —19.5 | |

*Cross-Sections of the Shore of Cape Cod, etc.*—Continued.

CROSS-SECTION No. 94—Continued.

No. 57 of 1888.

| Distance from origin. | Height above or below mean sea-level. | Remarks. |
|---|---|---|
| *Metres.* | *Feet.* | |
| 800 | —22.0 | |
| 900 | —28.5 | |
| 1,000 | —34.5 | |
| 1,060 | —40.0 | |

CROSS-SECTION No. 95.

No. 59 of 1888.

| Distance from origin. | Height above or below mean sea-level. | Remarks. |
|---|---|---|
| 0 | 87.0 | Origin: Lat. 41° 56′ 08″.4 |
| 20 | 83.3 | Long. 69° 58′ 56″.0 |
| 40 | 70.6 | Azimuth, 250° 02′ |
| 60 | 60.3 | |
| 80 | 56.2 | |
| 100 | 52.8 | |
| 120 | 54.5 | |
| 140 | 64.9 | |
| 160 | 64.9 | |
| 180 | 65.4 | |
| 200 | 53.8 | At bluff station. |
| 247 | 19.4 | At beach station and foot of bluff. |
| 255 | 16.7 | At crest of beach. |
| 285 | — 3.8 | |
| 300 | — 6.0 | |
| 400 | — 9.5 | |
| 500 | —16.0 | |
| 600 | —19.0 | |
| 700 | —21.5 | |
| 800 | —23.5 | |
| 900 | —30.5 | |
| 1,000 | —37.5 | |
| 1,025 | —39.0 | |

CROSS-SECTION No. 96.

No. 61 of 1888.

| Distance from origin. | Height above or below mean sea-level. | Remarks. |
|---|---|---|
| 0 | 88.6 | Origin: Lat. 41° 56′ 16″.9 |
| 20 | 91.6 | Long. 69° 59′ 00″.2 |
| 40 | 90.1 | Azimuth, 250° 02′ |
| 60 | 79.7 | |
| 80 | 79.9 | |
| 100 | 83.2 | |

CROSS-SECTION No. 96—Continued.

No. 61 of 1888.

| Distance from origin. | Height above or below mean sea-level. | Remarks. |
|---|---|---|
| *Metres.* | *Feet.* | |
| 120 | 80.3 | |
| 140 | 87.3 | |
| 160 | 83.0 | |
| 180 | 78.1 | |
| 200 | 88.6 | At bluff station. |
| 244 | 11.8 | At foot of bluff and beach station. |
| 255 | 9.6 | At crest of beach. |
| 299 | — 1.0 | |
| 400 | — 7.0 | |
| 500 | —20.0 | |
| 600 | —18.5 | |
| 700 | —20.5 | |
| 800 | —23.0 | |
| 900 | —28.5 | |
| 1,000 | —34.5 | |
| 1,025 | —38.0 | |

CROSS-SECTION No. 97.

No. 63 of 1888.

| Distance from origin. | Height above or below mean sea-level. | Remarks. |
|---|---|---|
| 0 | 111.3 | Origin: Lat. 41° 56′ 25″.9 |
| 20 | 107.3 | Long. 69° 59′ 04″.4 |
| 40 | 103.2 | Azimuth, 248° 35′ |
| 60 | 97.1 | |
| 80 | 93.9 | |
| 100 | 93.7 | |
| 120 | 91.5 | |
| 140 | 84.2 | |
| 160 | 82.9 | |
| 180 | 72.8 | |
| 200 | 66.7 | At bluff station. |
| 238 | 13.1 | At foot of bluff. |
| 244 | 11.6 | At beach station. |
| 249 | 11.8 | At crest of beach. |
| 283 | — 0.4 | |
| 300 | -------- | |
| 325 | — 5.0 | |
| 400 | — 9.5 | |
| 500 | — 20.5 | |
| 600 | — 23.0 | |

*Cross-Sections of the Shore of Cape Cod, etc.*—Continued.

CROSS-SECTION No. 97—Continued.

No. 63 of 1888.

| Distance from origin. | Height above or below mean sea-level. | Remarks. |
|---|---|---|
| *Metres.* | *Feet.* | |
| 700 | — 21.0 | |
| 800 | — 22.0 | |
| 900 | — 25.0 | |
| 1,000 | — 30.0 | |
| 1,100 | — 38.5 | |

CROSS-SECTION No. 98.

No. 65 of 1888.

| | | |
|---|---|---|
| 0 | 130.0 | Origin: Lat. 41° 56′ 35″.3 |
| 20 | 114.1 | Long. 69° 59′ 09″.5 |
| 40 | 104.7 | Azimuth, 247° 00′ |
| 60 | 95.4 | |
| 80 | 85.5 | |
| 100 | 78.2 | |
| 120 | 70.5 | |
| 140 | 72.9 | |
| 160 | 79.7 | |
| 180 | 80.4 | |
| 200 | 75.2 | At bluff station. |
| 235 | 11.1 | At foot of bluff. |
| 250 | 12.1 | At beach station. |
| 280 | — 0.9 | |
| 300 | — 6.0 | |
| 400 | — 15.0 | |
| 500 | — 27.5 | |
| 600 | — 27.5 | |
| 700 | — 22.0 | |
| 800 | — 23.5 | |
| 900 | — 29.5 | |
| 1,000 | — 39.5 | |

CROSS-SECTION No. 99.

No. 67 of 1888.

| | | |
|---|---|---|
| 0 | 88.1 | Origin: Lat. 41° 56′ 44″.7 |
| 20 | 86.6 | Long. 69° 59′ 10″.2 |
| 40 | 82.7 | Azimuth, 247° 00′ |
| 60 | 79.0 | |
| 80 | 79.1 | |
| 100 | 74.2 | |

CROSS-SECTION No. 99—Continued.

No. 67 of 1888.

| Distance from origin. | Height above or below mean sea-level. | Remarks. |
|---|---|---|
| *Metres.* | *Feet.* | |
| 120 | 73.7 | |
| 140 | 68.3 | At bluff station. |
| 167 | 18.6 | At foot of bluff. |
| 187 | -------- | At beach station. |
| 192 | 15.2 | At crest of beach. |
| 217 | — 2.3 | |
| 300 | — 7.5 | |
| 400 | — 8.5 | |
| 500 | —20.0 | |
| 600 | —25.0 | |
| 700 | —28.5 | |
| 800 | —23.0 | |
| 900 | —24.5 | |
| 1,000 | —29.5 | |
| 1,050 | —37.0 | |

CROSS-SECTION No. 100.

No. 69 of 1888.

| | | |
|---|---|---|
| 0 | 69.2 | Origin: Lat. 41° 56′ 54″.2 |
| 20 | 75.4 | Long. 69° 59′ 14″.7 |
| 40 | 82.3 | Azimuth, 249° 40′ |
| 60 | 81.5 | |
| 80 | 87.0 | At bluff station. |
| 123 | 15.9 | At foot of bluff. |
| 200 | — 7.5 | |
| 300 | —10.5 | |
| 400 | —18.5 | |
| 500 | —24.5 | |
| 600 | —23.5 | |
| 700 | —23.5 | |
| 800 | —24.0 | |
| 900 | —31.0 | |
| 1,000 | —35.5 | |

CROSS-SECTION No. 100½.

No. 70 of 1888.

| | | |
|---|---|---|
| 0 | 108.9 | Origin at bluff station: |
| -------- | -------- | Lat. 41° 56′ 59″.5 |
| -------- | -------- | Long. 69° 59′ 14″.4 |
| -------- | -------- | Azimuth, 246° 55′ |

*Cross-Sections of the Shore of Cape Cod, etc.*—Continued.

CROSS-SECTION NO. 100½—Continued.

No. 70 of 1888.

| Distance from origin. | Height above or below mean sea level. | Remarks. |
|---|---|---|
| *Metres.* | *Feet.* | |
| 51 | 10.7 | At beach station. |
| 100 | — 5.0 | |
| 200 | — 7.9 | |
| 300 | —17.0 | |
| 400 | —21.0 | |
| 500 | —21.0 | |
| 600 | —23.5 | |
| 700 | —28.0 | |
| 800 | —35.0 | |
| 860 | —37.5 | |

CROSS-SECTION NO. 101.

No. 71 of 1888.

| | | |
|---|---|---|
| 0 | 64.8 | Origin: Lat. 41° 57′ 02″.9 |
| 20 | 69.1 | Long. 69° 59′ 21″.6 |
| 40 | 74.2 | Azimuth, 246° 09′ |
| 60 | 81.3 | |
| 80 | 85.8 | |
| 100 | 85.2 | |
| 120 | 85.2 | |
| 160 | 12.2 | At foot of bluff. |
| 162 | 11.4 | At beach station. |
| 168 | 11.0 | At crest of beach. |
| 198 | — 0.6 | |
| 300 | — 8.0 | |
| 400 | —19.5 | |
| 500 | —20.5 | |
| 600 | —20.5 | |
| 700 | —23.0 | |
| 800 | —26.5 | |
| 900 | —34.5 | |
| 950 | —37.5 | |

CROSS-SECTION NO. 102.

No. 73 of 1888.

| | | |
|---|---|---|
| 0 | 11.1 | Origin: Lat. 41° 57′ 10″.7 |
| -------- | -------- | Long. 69° 59′ 30″.1 |
| -------- | -------- | Azimuth, 246° 09′ |
| 20 | 4.7 | At edge of cranberry bog. |

CROSS-SECTION NO. 102—Continued.

No. 73 of 1888.

| Distance from origin. | Height above or below mean sea-level. | Remarks. |
|---|---|---|
| *Metres.* | *Feet.* | |
| 40 | 4.8 | |
| 60 | 4.8 | |
| 70 | 3.3 | Water surface of bog. |
| 80 | 4.6 | |
| 100 | 4.7 | |
| 118 | 5.0 | At edge of cranberry bog. |
| 120 | 7.8 | |
| 140 | 21.7 | |
| 160 | 35.8 | |
| 180 | 40.2 | |
| 200 | 43.3 | |
| 220 | 43.5 | At bluff station. |
| 244 | 11.6 | At foot of bluff. |
| 246 | 10.9 | At beach station. |
| 259 | 9.6 | At crest of beach. |
| 284 | — 1.1 | |
| 300 | — 6.0 | |
| 400 | — 9.5 | |
| 500 | —21.5 | |
| 600 | —22.0 | |
| 700 | —21.5 | |
| 800 | —23.5 | |
| 900 | —30.5 | |
| 1,000 | —36.5 | |
| 1,020 | —38.5 | |

CROSS-SECTION NO. 103.

No. 75 of 1888.

| | | |
|---|---|---|
| 0 | 95.3 | Origin: Lat. 41° 57′ 18″.1 |
| 20 | 92.8 | Long. 69° 59′ 40″.0 |
| 40 | 89.6 | Azimuth, 246° 09′ |
| 60 | 85.3 | |
| 80 | 90.3 | |
| 100 | 95.3 | |
| 120 | 90.4 | |
| 140 | 81.9 | |
| 160 | 80.2 | |
| 180 | 84.4 | |
| 200 | 81.7 | |
| 220 | 81.4 | |

*Cross-Sections of the Shore of Cape Cod, etc.*—Continued.

CROSS-SECTION No. 103—Continued.

No. 75 of 1888.

| Distance from origin. | Height above or below mean sea-level. | Remarks. |
|---|---|---|
| *Metres.* | *Feet.* | |
| 240 | 81.2 | |
| 260 | 86.0 | |
| 280 | 86.5 | |
| 300 | 82.8 | |
| 320 | 74.0 | At bluff station. |
| 356 | 15.5 | |
| 360 | 8.0 | At foot of bluff and beach station. |
| 385 | — 3.4 | |
| 400 | — 6.5 | |
| 500 | — 9.5 | |
| 600 | —14.0 | |
| 700 | —24.0 | |
| 800 | —23.5 | |
| 900 | —24.5 | |
| 1,000 | —29.0 | |
| 1,100 | —34.0 | |
| 1,150 | —38.5 | |

CROSS-SECTION No. 104.

No. 77 of 1888.

| | | |
|---|---|---|
| 0 | 84.2 | Origin: Lat. 41° 57′ 30″.2 |
| 20 | 88.9 | Long. 69° 59′ 35″.7 |
| 40 | 94.2 | Azimuth, 246° 10′ |
| 60 | 100.7 | At bluff station. |
| 116 | 11.7 | At foot of bluff. |
| 120 | 10.7 | At beach station. |
| 122 | 10.8 | At crest of beach. |
| 150 | — 0.2 | |
| 200 | — 5.5 | |
| 300 | — 12.5 | |
| 400 | — 19.5 | |
| 500 | — 20.5 | |
| 600 | — 21.5 | |
| 700 | — 26.5 | |
| 800 | — 32.5 | |
| 880 | — 38.5 | |

CROSS-SECTION No. 105.

No. 79 of 1888.

| Distance from origin. | Height above or below mean sea-level. | Remarks. |
|---|---|---|
| *Metres.* | *Feet.* | |
| 0 | 93.9 | Origin: Lat. 41° 57′ 39″.8 |
| 20 | 95.9 | Long. 69° 59′ 46″.1 |
| 40 | 98.5 | Azimuth, 246° 10′ |
| 60 | 99.3 | |
| 80 | 100.0 | |
| 100 | 107.1 | |
| 120 | 107.6 | |
| 140 | 104.8 | |
| 160 | 94.5 | |
| 180 | 95.8 | |
| 200 | 96.0 | At bluff station. |
| 246 | 9.6 | At foot of bluff. |
| 251 | 7.4 | At beach station. |
| 266 | 1.2 | |
| 300 | — 6.5 | |
| 400 | — 10.5 | |
| 500 | — 17.0 | |
| 600 | — 20.0 | |
| 700 | — 21.0 | |
| 800 | — 22.5 | |
| 900 | — 27.0 | |
| 1,000 | — 34.5 | |

CROSS-SECTION No. 106.

No. 81 of 1888.

| | | |
|---|---|---|
| 0 | 33.0 | Origin: Lat. 41° 57′ 45″.7 |
| 20 | 32.7 | Long. 69° 59′ 52″.4 |
| 40 | 29.1 | Azimuth, 244° 38′ |
| 60 | 20.0 | |
| 80 | 19.0 | |
| 100 | 21.3 | |
| 120 | 27.2 | |
| 140 | 34.8 | |
| 160 | 45.1 | |
| 180 | 47.8 | |
| 200 | 47.5 | |
| 220 | 45.6 | |

*Cross-Sections of the Shore of Cape Cod, etc.*—Continued.

CROSS-SECTION No. 106—Continued.

No. 81 of 1888.

| Distance from origin. | Height above or below mean sea-level. | Remarks. |
|---|---|---|
| *Metres.* | *Feet.* | |
| 240 | 43.1 | At bluff station. |
| 263 | 11.9 | At foot of bluff. |
| 272 | 10.8 | At beach station. |
| 277 | 10.9 | At crest of beach. |
| 297 | 2.5 | |
| 400 | — 5.0 | |
| 500 | —12.5 | |
| 600 | —19.5 | |
| 700 | —21.0 | |
| 800 | —23.5 | |
| 900 | —28.0 | |
| 1,000 | —35.5 | |
| 1,020 | —37.5 | |

CROSS-SECTION No. 107.

No. 83 of 1888.

| | | |
|---|---|---|
| 0 | 27.6 | Origin: Lat. 41° 57′ 55″.0 |
| 18 | 21.8 | Long. 69° 59′ 56″.4 |
| 38 | 15.6 | Azimuth, 242° 30′ |
| 58 | 10.5 | |
| 78 | 6.9 | |
| 98 | 6.0 | |
| 118 | 6.1 | |
| 138 | 7.0 | |
| 158 | 10.7 | |
| 178 | 13.3 | |
| 198 | 18.5 | At bluff station. |
| 203 | 14.0 | At foot of bluff. |
| 205 | 14.7 | At crest of beach. |
| 230 | 3.3 | |
| 235 | -------- | At beach station. |
| 250 | — 4.5 | |
| 300 | — 8.5 | |
| 400 | — 9.5 | |
| 500 | —13.5 | |
| 600 | —22.5 | |
| 700 | —22.0 | |
| 800 | —24.5 | |
| 900 | —30.5 | |
| 950 | —35.5 | |

CROSS-SECTION No. 108.

No. 85 of 1888.

| Distance from origin. | Height above or below mean sea-level. | Remarks. |
|---|---|---|
| *Metres.* | *Feet.* | |
| 0 | 26.2 | Origin: Lat. 41° 58′ 03″.0 |
| 20 | 31.7 | Long. 70° 00′ 05″.1 |
| 40 | 34.2 | Azimuth, 243° 54′ |
| 60 | 35.4 | |
| 80 | 25.8 | |
| 100 | 26.7 | |
| 120 | 29.0 | |
| 140 | 28.4 | |
| 160 | 32.5 | |
| 180 | 27.7 | |
| 200 | 28.5 | |
| 220 | 27.9 | |
| 240 | 22.2 | At bluff station. |
| 272 | 12.2 | At foot of bluff. |
| 297 | 11.0 | At crest of beach. |
| 300 | 8.8 | At beach station. |
| 315 | 2.5 | |
| 400 | — 5.0 | |
| 500 | —14.5 | |
| 600 | —23.5 | |
| 700 | —23.5 | |
| 800 | —24.0 | |
| 900 | —27.5 | |
| 1,000 | —33.5 | |
| 1,050 | —36.0 | |

CROSS-SECTION No. 109.

No. 87 of 1888.

| | | |
|---|---|---|
| 0 | 52.5 | Origin: Lat. 41° 58′ 13″.7 |
| 20 | 62.8 | Long. 70° 00′ 04″.5 |
| 40 | 68.2 | Azimuth, 243° 54′ |
| 60 | 71.0 | |
| 80 | 71.2 | At bluff station. |
| 111 | 16.2 | |
| 113 | 11.9 | At foot of bluff and crest of beach. |
| 141 | 0.5 | At beach station. |
| 200 | — 9.5 | |
| 300 | —11.5 | |
| 400 | —16.0 | |

*Cross-Sections of the Shore of Cape Cod, etc.*—Continued.

CROSS-SECTION No. 109—Continued.

No. 87 of 1888.

| Distance from origin. | Height above or below mean sea-level. | Remarks. |
|---|---|---|
| *Metres.* | *Feet.* | |
| 500 | —24.0 | |
| 600 | —25.0 | |
| 700 | —28.0 | |
| 800 | —32.5 | |
| 875 | —35.0 | |

CROSS-SECTION No. 110.

No. 89 of 1888.

| | | |
|---|---|---|
| 0 | 57.2 | Origin: Lat. 41° 58′ 20″.8 |
| 20 | 47.0 | Long. 70° 00′ 15″.6 |
| 40 | 43.7 | Azimuth, 243° 54′ |
| 60 | 30.7 | |
| 80 | 40.7 | |
| 100 | 44.7 | |
| 120 | 46.4 | |
| 140 | 51.3 | |
| 160 | 50.3 | |
| 180 | 47.8 | |
| 200 | 52.7 | |
| 220 | 53.6 | At bluff station. |
| 247 | 15.5 | At foot of bluff. |
| 252 | 14.1 | At crest of beach. |
| 277 | 7.9 | At beach station. |
| 289 | 2.4 | |
| 300 | — 7.5 | |
| 400 | — 7.0 | |
| 500 | —14.0 | |
| 600 | —23.0 | |
| 700 | —23.5 | |
| 800 | —27.5 | |
| 900 | —31.0 | |
| 1,000 | —34.0 | |

CROSS-SECTION No. 111.

No. 91 of 1888.

| | | |
|---|---|---|
| 0 | 102.0 | Origin: Lat. 41° 58′ 30″.0 |
| 20 | 112.0 | Long. 70° 00′ 19″.5 |
| 40 | 115.1 | Azimuth, 243° 48′ |
| 60 | 115.0 | |
| 80 | 108.3 | |

CROSS-SECTION No. 111—Continued.

No. 91 of 1888.

| Distance from origin. | Height above or below mean sea-level. | Remarks. |
|---|---|---|
| *Metres.* | *Feet.* | |
| 100 | 100.8 | |
| 120 | 90.6 | |
| 140 | 91.3 | |
| 160 | 91.7 | |
| 180 | 83.3 | At bluff station. |
| 215 | 16.4 | At foot of bluff. |
| 220 | 13.8 | At crest of beach. |
| 230 | 8.9 | At beach station. |
| 242 | 1.0 | |
| 300 | — 8.0 | |
| 400 | — 8.0 | |
| 500 | — 11.5 | |
| 600 | — 19.5 | |
| 700 | — 23.0 | |
| 800 | — 24.0 | |
| 900 | — 27.5 | |
| 1,000 | — 33.5 | |

CROSS-SECTION No. 112.

No. 93 of 1888.

| | | |
|---|---|---|
| 0 | 115.3 | Origin: Lat. 41° 58′ 38″.4 |
| 20 | 129.3 | Long. 70° 00′ 25″.9 |
| 40 | 134.1 | Azimuth, 243° 51′ |
| 60 | 130.2 | |
| 80 | 121.5 | |
| 100 | 102.0 | |
| 120 | 116.1 | |
| 140 | 107.6 | |
| 160 | 105.2 | |
| 180 | 103.4 | |
| 200 | 102.0 | At bluff station. |
| 247 | 13.4 | At foot of bluff. |
| 249 | 13.4 | At beach station. |
| 250 | 13.4 | At crest of beach. |
| 277 | 1.9 | |
| 300 | — 8.5 | |
| 400 | — 11.0 | |
| 500 | — 11.5 | |
| 600 | — 19.5 | |
| 700 | — 23.0 | |

*Cross-Sections of the Shore of Cape Cod, etc.*—Continued.

CROSS-SECTION NO. 112—Continued.

No. 93 of 1888.

| Distance from origin. | Height above or below mean sea-level. | Remarks. |
|---|---|---|
| *Metres.* | *Feet.* | |
| 800 | — 23.5 | |
| 900 | — 25.5 | |
| 1,000 | — 31.0 | |
| 1,050 | — 33.0 | |

CROSS-SECTION NO. 113.

No. 95 of 1888.

| | | |
|---|---|---|
| 0 | 91.2 | Origin: Lat. 41° 58′ 47″.0 |
| 20 | 98.3 | Long. 70° 00′ 30″.7 |
| 40 | 98.1 | Azimuth, 243° 51′ |
| 60 | 103.0 | |
| 80 | 106.9 | |
| 100 | 115.9 | |
| 120 | 116.0 | |
| 140 | 122.8 | |
| 160 | 125.3 | |
| 180 | 127.8 | At bluff station. |
| 238 | 13.1 | At foot of bluff and beach station. |
| 249 | 13.0 | At crest of beach. |
| 278 | 0.5 | |
| 300 | — 4.5 | |
| 400 | — 9.5 | |
| 500 | — 20.0 | |
| 600 | — 22.5 | |
| 700 | — 22.5 | |
| 800 | — 26.5 | |
| 900 | — 31.0 | |
| 980 | — 33.5 | |

CROSS-SECTION NO. 114.

No. 97 of 1888.

| | | |
|---|---|---|
| 0 | 79.2 | Origin: Lat. 41° 58′ 56″.4 |
| 20 | 74.4 | Long. 70° 00′ 35″.2 |
| 40 | 66.4 | Azimuth, 243° 50′ |
| 60 | 58.2 | |
| 80 | 61.8 | |
| 100 | 62.2 | |
| 120 | 61.8 | |
| 140 | 62.8 | |

CROSS-SECTION NO. 114—Continued.

No. 97 of 1888.

| Distance from origin. | Height above or below mean sea-level. | Remarks. |
|---|---|---|
| *Metres.* | *Feet.* | |
| 160 | 68.6 | At bluff station. |
| 192 | 14.2 | At foot of bluff and beach station. |
| 204 | 12.5 | At crest of beach. |
| 226 | 0.3 | |
| 300 | — 7.0 | |
| 400 | — 9.5 | |
| 500 | —19.0 | |
| 600 | —25.5 | |
| 700 | —24.0 | |
| 800 | —28.5 | |
| 900 | —34.0 | |

CROSS-SECTION NO. 115.

No. 99 of 1888.

| | | |
|---|---|---|
| 0 | 142.8 | Origin: Lat. 41° 59′ 03″.0 |
| 20 | 138.8 | Long. 70° 00′ 47″.6 |
| 40 | 136.6 | Azimuth, 243° 00′ |
| 60 | 129.5 | |
| 80 | 127.8 | |
| 100 | 125.8 | |
| 120 | 132.3 | |
| 140 | 138.0 | |
| 160 | 138.5 | |
| 180 | 142.9 | |
| 200 | 146.5 | |
| 220 | 140.4 | |
| 240 | 131.4 | |
| 260 | 123.1 | |
| 280 | 119.9 | |
| 300 | 129.5 | At bluff station. |
| 362 | 12.5 | At foot of bluff. |
| 367 | 11.0 | At beach station. |
| 383 | 11.9 | At crest of beach. |
| 402 | 0.4 | |
| 500 | — 6.0 | |
| 600 | — 16.0 | |
| 700 | — 21.0 | |
| 800 | — 21.0 | |
| 900 | — 23.5 | |
| 1,000 | — 31.5 | |
| 1,050 | — 35.0 | |

*Cross-Sections of the Shore of Cape Cod, etc.*—Continued.

CROSS-SECTION No. 116.

No. 101 of 1888.

| Distance from origin. | Height above or below mean sea-level. | Remarks. |
|---|---|---|
| *Metres.* | *Feet.* | |
| 0 | 150.3 | Origin: Lat. 41° 59′ 12″.9 |
| 20 | 154.3 | Long. 70° 00′ 49″.7 |
| 40 | 156.3 | Azimuth, 241° 56′ |
| 60 | 157.2 | |
| 80 | 161.1 | |
| 100 | 161.2 | |
| 120 | 164.3 | |
| 140 | 162.7 | |
| 160 | 153.2 | |
| 170 | 150.3 | |
| 180 | 144.6 | |
| 200 | 138.4 | At bluff station. |
| 260 | 10.6 | At foot of bluff. |
| 263 | 9.4 | At beach station and crest of beach. |
| 295 | — 1.3 | |
| 400 | — 7.0 | |
| 500 | — 14.0 | |
| 600 | — 21.5 | |
| 700 | — 22.0 | |
| 800 | — 25.5 | |
| 900 | — 31.0 | |
| 1,000 | — 35.5 | |

CROSS-SECTION No. 117.

No. 103 of 1888.

| | | |
|---|---|---|
| 0 | 142.5 | Origin: Lat. 41° 59′ 22″.4 |
| 20 | 147.8 | Long. 70° 00′ 53″.7 |
| 40 | 150.1 | Azimuth, 241° 56′ |
| 60 | 149.0 | |
| 80 | 145.1 | |
| 100 | 146.9 | |
| 120 | 150.4 | |
| 140 | 146.5 | At bluff station. |
| 205 | 9.8 | At beach station. |
| 300 | — 5.5 | |
| 400 | — 12.0 | |
| 500 | — 17.5 | |
| 600 | — 23.0 | |
| 700 | — 25.0 | |

CROSS-SECTION No. 117—Continued.

No. 103 of 1888.

| Distance from origin. | Height above or below mean sea-level. | Remarks. |
|---|---|---|
| *Metres.* | *Feet.* | |
| 800 | — 28.5 | |
| 900 | — 35.0 | |
| 970 | — 37.0 | |

CROSS-SECTION No. 118.

No. 105 of 1888.

| | | |
|---|---|---|
| 0 | 113.4 | Origin: Lat. 41° 59′ 31″.1 |
| 20 | 109.3 | Long. 70° 00′ 57″.4 |
| 40 | 109.8 | Azimuth, 241° 55′ |
| 60 | 110.0 | |
| 80 | 102.5 | |
| 100 | 91.6 | |
| 120 | 79.6 | At bluff station. |
| 151 | 12.0 | At foot of bluff. |
| 156 | 12 0 | At beach station and crest of beach. |
| 191 | — 0.8 | |
| 200 | — 4.0 | |
| 300 | — 9.5 | |
| 400 | — 21.5 | |
| 500 | — 24.5 | |
| 600 | — 23.0 | |
| 700 | — 26.5 | |
| 800 | — 33.5 | |
| 900 | — 37.5 | |

CROSS-SECTION No. 119.

No. 107 of 1888.

| | | |
|---|---|---|
| 0 | 46.0 | Origin: Lat. 41° 59′ 39″.1 |
| 5 | 36.7 | Long. 70° 01′ 06″.1 |
| 25 | 23.0 | Azimuth, 241° 56′ |
| 45 | 23.0 | |
| 65 | 23.0 | |
| 85 | 23.0 | |
| 105 | 27.8 | |
| 125 | 43.0 | |
| 145 | 52.0 | |
| 165 | 51.4 | |

*Cross-Sections of the Shore of Cape Cod, etc.*—Continued.

CROSS-SECTION NO. 119—Continued.

No. 107 of 1888.

| Distance from origin. | Height above or below mean sea-level. | Remarks. |
|---|---|---|
| *Metres.* | *Feet.* | |
| 185 | 59.3 | At bluff station. |
| 208 | 13.5 | At foot of bluff. |
| 211 | 11.8 | At beach station. |
| 236 | 13.0 | At crest of beach. |
| 258 | 0.5 | |
| 300 | — 4.5 | |
| 400 | —13.5 | |
| 500 | —20.5 | |
| 600 | —22.0 | |
| 700 | —24.5 | |
| 800 | —29.0 | |
| 920 | —33.5 | |

CROSS-SECTION NO. 120.

No. 109 of 1888.

| | | |
|---|---|---|
| 0 | 37.4 | Origin: Lat. 41° 59′ 45″.1 |
| 10 | 33.1 | Long. 70° 01′ 18″.8 |
| 30 | 31.0 | Azimuth, 241° 56′ |
| 50 | 30.9 | |
| 70 | 26.8 | |
| 90 | 18.4 | |
| 110 | 14.4 | |
| 130 | 14.4 | |
| 150 | 22.2 | |
| 170 | 28.1 | |
| 190 | 36.2 | |
| 210 | 45.2 | |
| 230 | 54.0 | |
| 250 | 61.7 | |
| 270 | 68.3 | |
| 290 | 69.9 | |
| 310 | 82.9 | |
| 330 | 86.4 | |
| 350 | 76.6 | At bluff station. |
| 384 | 15.0 | At foot of bluff and beach station. |
| 406 | 10.7 | At crest of beach. |
| 423 | 1.5 | |
| 500 | — 7.5 | |
| 600 | —14.0 | |

CROSS-SECTION NO. 120—Continued.

No. 109 of 1888.

| Distance from origin. | Height above or below mean sea-level. | Remarks |
|---|---|---|
| *Metres.* | *Feet.* | |
| 700 | —21.5 | |
| 800 | —21.5 | |
| 900 | —24.5 | |
| 1,000 | —33.5 | |
| 1,040 | —33.5 | |

CROSS-SECTION NO. 121.

No. 111 of 1888.

| | | |
|---|---|---|
| 0 | 5.6 | Origin: Lat. 41° 59′ 55″.8 |
| 20 | 4.0 | Long. 70° 01′ 19″.5 |
| 40 | 6.9 | Azimuth, 239° 22′ |
| 60 | 12.8 | |
| 80 | 21.8 | |
| 100 | 36.6 | |
| 120 | 55.3 | |
| 140 | 60.4 | |
| 160 | 63.6 | |
| 180 | 63.4 | |
| 200 | 55.7 | At bluff station. |
| 231 | 13.5 | At foot of bluff. |
| 236 | 12.4 | At beach station. |
| 242 | 11.8 | At crest of beach. |
| 263 | 2.2 | |
| 300 | — 7.0 | |
| 400 | —13.5 | |
| 500 | —21.5 | |
| 600 | —21.5 | |
| 700 | —22.5 | |
| 800 | —26.0 | |
| 900 | —33.5 | |

CROSS-SECTION NO. 122.

No. 113 of 1888.

| | | |
|---|---|---|
| 0 | 4.7 | Origin: Lat. 42° 00′ 04″.4 |
| 20 | 6.0 | Long. 70° 01′ 26″.0 |
| 40 | 21.9 | Azimuth, 239° 05′ |
| 60 | 42.7 | |
| 80 | 54.9 | |

*Cross-Sections of the Shore of Cape Cod, etc.*—Continued.

CROSS-SECTION NO. 122—Continued.

No. 113 of 1888.

| Distance from origin. | Height above or below mean sea-level. | Remarks. |
|---|---|---|
| *Metres.* | *Feet.* | |
| 100 | 53.1 | |
| 120 | 47.0 | |
| 140 | 43.9 | |
| 160 | 46.7 | |
| 180 | 43.7 | |
| 200 | 36.7 | At bluff station. |
| 230 | 5.9 | At beach station. |
| 300 | — 7.7 | |
| 400 | —11.7 | |
| 500 | —20.2 | |
| 600 | —22.7 | |
| 700 | —22.7 | |
| 800 | —24.7 | |
| 960 | —32.7 | |
| 950 | —33.7 | |

CROSS-SECTION NO. 123.

No. 115 of 1888.

| | | |
|---|---|---|
| 0 | 73.3 | Origin: Lat. 42° 00′ 12″.2 |
| 20 | 66.7 | Long. 70° 01′ 33″.5 |
| 40 | 63.2 | Azimuth, 239° 18′ |
| 60 | 72.6 | |
| 80 | 73.1 | |
| 100 | 71.0 | |
| 120 | 72.8 | |
| 140 | 79.6 | |
| 160 | 82.5 | |
| 180 | 95.1 | |
| 200 | 101.0 | At bluff station. |
| 252 | 12.8 | At foot of bluff. |
| 255 | 10.6 | At beach station. |
| 265 | 10.2 | At crest of beach. |
| 276 | 2.3 | |
| 300 | — 5.0 | |
| 400 | — 7.5 | |
| 500 | — 19.5 | |
| 600 | — 26.5 | |
| 700 | — 23.5 | |
| 800 | — 23.0 | |
| 900 | — 28.0 | |
| 975 | — 30.5 | |

CROSS-SECTION NO. 124.

No. 117 of 1888.

| Distance from origin. | Height above or below mean sea-level. | Remarks. |
|---|---|---|
| *Metres.* | *Feet.* | |
| 0 | 46.6 | Origin: Lat. 42° 00′ 20″.2 |
| 20 | 65.0 | Long. 70° 01′ 40″.7 |
| 40 | 82.4 | Azimuth, 239° 20′ |
| 60 | 97.8 | |
| 80 | 114.8 | |
| 100 | 122.2 | |
| 120 | 125.1 | |
| 140 | 126.8 | |
| 160 | 126.9 | |
| 180 | 126.2 | |
| 200 | 130.8 | At bluff station. |
| 262 | 13.3 | At foot of bluff. |
| 271 | 10.3 | At beach station. |
| 284 | 10.6 | At crest of beach. |
| 296 | 2.2 | |
| 300 | — 7.5 | |
| 400 | — 7.0 | |
| 500 | — 21.0 | |
| 600 | — 24.5 | |
| 700 | — 23.5 | |
| 800 | — 23.5 | |
| 900 | — 28.5 | |
| 980 | — 31.5 | |

CROSS-SECTION NO. 125.

No. 119 of 1888.

| | | |
|---|---|---|
| 0 | 81.1 | Origin: Lat. 42° 00′ 29″.2 |
| 20 | 72.8 | Long. 70° 01′ 46″.2 |
| 40 | 64.5 | Azimuth, 239° 20′ |
| 60 | 57.6 | |
| 80 | 55.8 | |
| 100 | 51.6 | |
| 120 | 52.2 | |
| 140 | 52.7 | |
| 160 | 51.3 | |
| 180 | 46.7 | |
| 200 | 34.7 | At bluff station. |
| 235 | 13.5 | At foot of bluff. |
| 239 | 12.0 | At beach station. |
| 254 | 11.7 | At crest of beach. |

*Cross-Sections of the Shore of Cape Cod, etc.*—Continued.

CROSS-SECTION NO. 125—Continued.

No. 119 of 1888.

| Distance from origin. | Height above or below mean sea-level. | Remarks. |
|---|---|---|
| *Metres.* | *Feet.* | |
| 272 | 3.4 | |
| 300 | — 5.5 | |
| 400 | —13.5 | |
| 500 | —21.5 | |
| 600 | —23.5 | |
| 700 | —21.5 | |
| 800 | —24.5 | |
| 900 | —30.0 | |
| 1,000 | —34.0 | |

CROSS-SECTION NO. 126.

No. 121 of 1888.

| | | |
|---|---|---|
| 0 | 123.1 | Origin: Lat. 42° 00′ 37″.2 |
| 20 | 123.8 | Long. 70° 01′ 53″.8 |
| 40 | 117.6 | Azimuth, 239° 20′ |
| 60 | 116.2 | |
| 80 | 120.4 | |
| 100 | 121.1 | |
| 120 | 119.3 | |
| 140 | 115.6 | |
| 160 | 115.5 | |
| 180 | 123.6 | |
| 200 | 133.3 | At bluff station. |
| 268 | 15.2 | At foot of bluff and beach station. |
| 277 | 13.3 | At crest of beach. |
| 305 | 3.6 | |
| 400 | — 8.0 | |
| 500 | — 16.0 | |
| 600 | — 19.0 | |
| 700 | — 19.5 | |
| 800 | — 22.0 | |
| 900 | — 28.5 | |
| 1,000 | — 34.0 | |

CROSS-SECTION NO. 127.

No. 123 of 1888.

| | | |
|---|---|---|
| 0 | 95.6 | Origin: Lat. 42° 00′ 45″.4 |
| 15 | 102.8 | Long. 70° 02′ 00″.5 |
| 50 | 102.6 | Azimuth, 240° 42′ |

CROSS-SECTION NO. 127—Continued.

No. 123 of 1888.

| Distance from origin. | Height above or below mean sea-level. | Remarks. |
|---|---|---|
| *Metres.* | *Feet.* | |
| 67 | 101.6 | |
| 89 | 97.6 | |
| 110 | 106.6 | |
| 143 | 119.2 | |
| 160 | 130.6 | |
| 180 | 124.3 | |
| 200 | 126.8 | At bluff station. |
| 272 | -------- | At beach station. |
| 274 | 17.4 | |
| 276 | 12.3 | At foot of bluff. |
| 293 | 12.3 | At crest of beach. |
| 316 | — 0.8 | |
| 400 | — 7.0 | |
| 500 | — 16.5 | |
| 600 | — 20.5 | |
| 700 | — 19.5 | |
| 800 | — 22.5 | |
| 900 | — 29.0 | |
| 1,000 | — 35.5 | |

CROSS-SECTION NO. 128.

No. 125 of 1888.

| | | |
|---|---|---|
| 0 | 160.1 | Origin: Lat. 42° 00′ 53″.3 |
| 5 | 158.6 | Long. 70° 02′ 06″.6 |
| 10 | 149.6 | Azimuth, 237° 38′ |
| 40 | 143.7 | |
| 60 | 139.1 | |
| 80 | 125.9 | |
| 100 | 102.6 | |
| 120 | 84.1 | |
| 140 | 86.0 | |
| 160 | 95.3 | |
| 180 | 100.8 | |
| 200 | 93.4 | At bluff station. |
| 235 | 17.7 | |
| 240 | 11.5 | At foot of bluff and crest of beach. |
| 250 | -------- | At beach station. |
| 275 | 0.3 | |
| 300 | — 2.0 | |

*Cross-Sections of the Shore of Cape Cod, etc.*—Continued.

CROSS-SECTION No. 128—Continued.

No. 125 of 1888.

| Distance from origin. | Height above or below mean sea-level. | Remarks. |
|---|---|---|
| *Metres.* | *Feet.* | |
| 400 | — 11.5 | |
| 500 | — 19.5 | |
| 600 | — 25.0 | |
| 700 | — 23.5 | |
| 800 | — 21.5 | |
| 900 | — 26.5 | |
| 1,000 | — 38.5 | |

CROSS-SECTION No. 129.

No. 127 of 1888.

| | | |
|---|---|---|
| 0 | 150.9 | Origin: Lat. 42° 01′ 01″.0 |
| 10 | 154.7 | Long. 70° 02′ 15″.2 |
| 30 | 156.7 | Azimuth, 235° 20′ |
| 50 | 157.4 | |
| 83 | 158.5 | |
| 120 | 158.4 | |
| 140 | 160.7 | |
| 160 | 160.4 | |
| 180 | 159.5 | |
| 200 | 151.3 | At bluff station. |
| 265 | 11.7 | At foot of bluff. |
| 276 | 12.7 | At beach station. |
| 278 | 12.8 | At crest of beach. |
| 303 | 1.4 | |
| 400 | — 7.5 | |
| 500 | — 17.5 | |
| 600 | — 23.0 | |
| 700 | — 22.0 | |
| 800 | — 23.5 | |
| 900 | — 35.0 | |
| 1,020 | — 35.5 | |

CROSS-SECTION No. 130.

No. 129 of 1888.

| | | |
|---|---|---|
| 0 | 48.8 | Origin: Lat. 42° 01′ 09″.6 |
| 20 | 52.9 | Long. 70° 02′ 21″.6 |
| 40 | 52.6 | Azimuth, 235° 20′ |
| 60 | 53.6 | |
| 80 | 55.0 | |

CROSS-SECTION No. 130—Continued.

No. 129 of 1888.

| Distance from origin. | Height above or below mean sea-level. | Remarks. |
|---|---|---|
| *Metres.* | *Feet.* | |
| 100 | 57.9 | |
| 120 | 61.9 | |
| 140 | 67.5 | |
| 160 | 78.6 | |
| 180 | 80.4 | |
| 200 | 80.3 | At bluff station. |
| 249 | 13.5 | At beach station and foot of bluff. |
| 280 | 0.6 | |
| 300 | — 4.5 | |
| 400 | — 6.0 | |
| 500 | —16.5 | |
| 600 | —23.0 | |
| 700 | —22.5 | |
| 800 | —21.5 | |
| 900 | —28.5 | |
| 1,000 | —36.5 | |
| 1,050 | —37.5 | |

CROSS-SECTION No. 131.

No. 131 of 1888.

| | | |
|---|---|---|
| 0 | 148.1 | Origin: Lat. 42° 01′ 18″.1 |
| 6 | 144.6 | Long. 70° 02′ 27″.6 |
| 46 | 133.5 | Azimuth, 235° 20′ |
| 66 | 133.9 | |
| 86 | 139.4 | |
| 106 | 141.4 | |
| 126 | 144.2 | |
| 146 | 137.2 | At bluff station. |
| 208 | 13.4 | At foot of bluff. |
| 210 | 13.4 | At beach station. |
| 239 | 0.9 | |
| 300 | — 8.0 | |
| 400 | — 12.0 | |
| 500 | — 21.0 | |
| 600 | — 22.0 | |
| 700 | — 21.0 | |
| 800 | — 23.5 | |
| 900 | — 31.5 | |
| 975 | — 38.0 | |

*Cross-Sections of the Shore of Cape Cod, etc.*—Continued.

CROSS-SECTION NO. 132.

No. 132 of 1888.

| Distance from origin. | Height above or below mean sea-level. | Remarks. |
|---|---|---|
| *Metres.* | *Feet.* | |
| 0 | 134.5 | Origin: Lat. 42° 01′ 26″.6 |
| 20 | 139.0 | Long. 70° 02′ 34″.2 |
| 40 | 143.9 | Azimuth, 235° 20′ |
| 50 | 149.4 | |
| 60 | 152.6 | |
| 80 | 147.3 | |
| 100 | 149.4 | At bluff station. |
| 179 | 11.9 | At foot of bluff. |
| 183 | 11.5 | At beach station. |
| 196 | 12.0 | At crest of beach. |
| 222 | 2.7 | |
| 300 | — 6.5 | |
| 400 | — 16.5 | |
| 500 | — 19.0 | |
| 600 | — 19.5 | |
| 700 | — 21.5 | |
| 800 | — 27.5 | |
| 900 | — 33.0 | |
| 980 | — 37.5 | |

CROSS-SECTION NO. 133.

No. 135 of 1888.

| | | |
|---|---|---|
| 0 | 151.4 | Origin: Lat. 42° 01′ 32″.2 |
| 20 | 151.6 | Long. 70° 02′ 44″.7 |
| 40 | 150.6 | Azimuth, 232° 10′ |
| 60 | 151.6 | |
| 65 | 152.3 | |
| 80 | 151.3 | |
| 96 | 144.8 | |
| 120 | 138.8 | |
| 140 | 138.5 | |
| 160 | 145.3 | |
| 166 | 147.0 | |
| 180 | 141.2 | |
| 200 | 143.2 | At bluff station. |
| 279 | 13.9 | At foot of bluff. |
| 288 | 13.0 | At crest of beach and station. |
| 316 | 2.9 | |
| 400 | — 11.0 | |
| 500 | — 13.5 | |

CROSS-SECTION NO. 133—Continued.

No. 135 of 1888.

| Distance from origin. | Height above or below mean sea-level. | Remarks. |
|---|---|---|
| *Metres.* | *Feet.* | |
| 600 | — 16.0 | |
| 700 | — 18.5 | |
| 800 | — 22.5 | |
| 900 | — 29.5 | |
| 1,000 | — 34.5 | |
| 1,100 | — 38.5 | |
| 1,140 | — 42.0 | |

CROSS-SECTION NO. 134.

No. 137 of 1888.

| | | |
|---|---|---|
| 0 | 160.4 | Origin: Lat. 42° 01′ 41″.1 |
| 10 | 162.2 | Long. 70° 02′ 49″.8 |
| 20 | 161.2 | Azimuth, 228° 56′ |
| 30 | 159.4 | |
| 50 | 158.1 | |
| 80 | 164.2 | |
| 90 | 166.2 | |
| 100 | 159.5 | At bluff station. |
| 183 | 11.4 | At foot of bluff. |
| 190 | 12.1 | At beach station. |
| 196 | 12.9 | At crest of beach. |
| 226 | 2.4 | |
| 300 | — 6.5 | |
| 400 | — 16.5 | |
| 500 | — 25.0 | |
| 600 | — 18.0 | |
| 700 | — 17.0 | |
| 800 | — 25.5 | |
| 900 | — 31.5 | |
| 1,000 | — 38.0 | |
| 1,050 | — 40.5 | |

CROSS-SECTION NO. 135.

No. 139 of 1888.

| | | |
|---|---|---|
| 0 | 142.5 | Origin: Lat. 42° 01′ 47″.5 |
| 20 | 146.0 | Long. 70° 03′ 00″.0 |
| 40 | 152.0 | Azimuth, 228° 56′ |
| 60 | 156.4 | |
| 70 | 157.5 | |

*Cross-Sections of the Shore of Cape Cod, etc.*—Continued.

CROSS-SECTION No. 135—Continued.

No. 139 of 1888.

| Distance from origin. | Height above or below mean sea-level. | Remarks. |
|---|---|---|
| *Metres.* | *Feet.* | |
| 80 | 154.0 | |
| 100 | 152.7 | |
| 120 | 145.5 | |
| 130 | 141.2 | |
| 140 | 145.5 | |
| 160 | 155.4 | |
| 180 | 158.8 | At bluff station. |
| 240 | 12.7 | At foot of bluff and crest of beach. |
| 253 | -------- | At beach station. |
| 274 | 1.2 | |
| 300 | — 4.5 | |
| 400 | — 15.5 | |
| 500 | — 23.5 | |
| 600 | — 22.0 | |
| 700 | — 18.0 | |
| 800 | — 23.0 | |
| 900 | — 30.0 | |
| 1,000 | — 34.5 | |
| 1,050 | — 38.0 | |

CROSS-SECTION No. 136.

No. 141 of 1888.

| Distance from origin. | Height above or below mean sea-level. | Remarks. |
|---|---|---|
| 0 | 134.3 | Origin: Lat. 42° 01′ 54″.3 |
| 20 | 138.0 | Long. 70° 03′ 09″.1 |
| 40 | 139.7 | Azimuth, 228° 55′ |
| 60 | 132.0 | |
| 80 | 130.4 | |
| 100 | 127.5 | |
| 113 | 125.6 | |
| 120 | 123.4 | |
| 140 | 112.3 | |
| 160 | 102.4 | |
| 180 | 105.4 | |
| 200 | 110.7 | At bluff station. |
| 240 | 15.0 | At foot of bluff. |
| 242 | 10.9 | At crest of beach. |
| 256 | -------- | At beach station. |
| 271 | — 0.1 | |
| 300 | — 4.0 | |
| 400 | — 13.0 | |
| 500 | — 22.0 | |

CROSS-SECTION No. 136—Continued.

No. 141 of 1888.

| Distance from origin. | Height above or below mean sea-level. | Remarks. |
|---|---|---|
| *Metres.* | *Feet.* | |
| 600 | — 19.5 | |
| 700 | — 17.5 | |
| 800 | — 22.0 | |
| 900 | — 26.5 | |
| 1,000 | — 33.5 | |
| 1,075 | — 36.5 | |

CROSS-SECTION No. 137.

No. 143 of 1888.

| Distance from origin. | Height above or below mean sea-level. | Remarks. |
|---|---|---|
| 0 | 153.4 | Origin: Lat. 42° 02′ 01″.5 |
| 20 | 157.3 | Long. 70° 03′ 18″.3 |
| 40 | 159.5 | Azimuth, 228° 56′ |
| 60 | 156.9 | |
| 80 | 158.5 | |
| 100 | 158.5 | |
| 120 | 159.2 | |
| 140 | 157.9 | |
| 160 | 158.9 | |
| 170 | 160.2 | |
| 180 | 156.2 | |
| 200 | 154.9 | At bluff station. |
| 266 | 12.1 | At foot of bluff. |
| 268 | 11.7 | At beach station. |
| 284 | 10.9 | At crest of beach. |
| 297 | 2.4 | |
| 300 | — 2.0 | |
| 400 | — 19.5 | |
| 500 | — 18.5 | |
| 600 | — 18.0 | |
| 700 | — 20.0 | |
| 800 | — 23.0 | |
| 900 | — 30.5 | |
| 1,000 | — 35.5 | |
| 1,075 | — 38.5 | |

CROSS-SECTION No. 138.

No. 145 of 1888.

| Distance from origin. | Height above or below mean sea-level. | Remarks. |
|---|---|---|
| 0 | 97.1 | Origin: Lat. 42° 02′ 10″.8 |
| 20 | 101.7 | Long. 70° 03′ 23″.2 |
| 60 | 105.7 | Azimuth, 226° 50′ |

*Cross-Sections of the Shore of Cape Cod, etc.*—Continued.

CROSS-SECTION NO. 138—Continued.

No. 145 of 1888.

| Distance from origin. | Height above or below mean sea-level. | Remarks. |
|---|---|---|
| *Metres.* | *Feet.* | |
| 100 | 113.5 | At bluff station. |
| 157 | 16.4 | At foot of bluff. |
| 162 | 14.4 | |
| 163 | 10.4 | At foot of bench. |
| 167 | 8.6 | At beach station. |
| 171 | 7.4 | |
| 201 | 10.2 | At crest of beach. |
| 217 | 2.1 | |
| 300 | — 8.0 | |
| 400 | — 16.5 | |
| 500 | — 18.0 | |
| 600 | — 18.0 | |
| 700 | — 22.0 | |
| 800 | — 26.5 | |
| 900 | — 31.0 | |
| 950 | — 34.0 | |

CROSS-SECTION NO. 139.

No. 147 of 1888.

| | | |
|---|---|---|
| 0 | 112.0 | Origin: Lat. 42° 02′ 15″.4 |
| 0 | 118.9 | Long. 70° 03′ 35″.4 |
| 40 | 122.0 | Azimuth, 225° 40′ |
| 60 | 120.7 | |
| 80 | 117.8 | |
| 100 | 115.1 | |
| 120 | 112.4 | |
| 140 | 103.8 | |
| 160 | 93.0 | |
| 180 | 95.0 | |
| 200 | 105.8 | At bluff station. |
| 256 | 15.9 | At foot of bluff. |
| 257 | 14.9 | |
| 270 | 15.9 | |
| 271 | 13.2 | At foot of bench. |
| 272 | 13.1 | At beach station. |
| 288 | 6.8 | |
| 321 | 10.7 | At crest of beach. |
| 334 | 3.5 | |
| 400 | — 8.5 | |
| 500 | — 17.5 | |

CROSS-SECTION NO. 139—Continued.

No. 147 of 1888.

| Distance from origin. | Height above or below mean sea-level. | Remarks. |
|---|---|---|
| *Metres.* | *Feet.* | |
| 600 | — 19.5 | |
| 700 | — 19.0 | |
| 800 | — 22.5 | |
| 900 | — 26.5 | |
| 1,000 | — 32.0 | |

CROSS-SECTION NO. 140.

No. 149 of 1888.

| | | |
|---|---|---|
| 0 | 125.2 | Origin: Lat. 42° 02′ 22″.4 |
| 20 | 122.4 | Long. 70° 03′ 45″.6 |
| 47 | 120.4 | Azimuth, 230° 10′ |
| 80 | 121.0 | |
| 100 | 119.3 | |
| 120 | 122.7 | |
| 140 | 123.5 | |
| 160 | 120.2 | |
| 180 | 119.0 | |
| 200 | 122.9 | At bluff station. |
| 270 | 13.4 | At foot of bluff. |
| 282 | 11.0 | At beach station. |
| 288 | 9.8 | |
| 308 | 10.9 | At crest of beach. |
| 344 | 3.3 | |
| 400 | — 7.5 | |
| 500 | — 16.5 | |
| 600 | — 20.5 | |
| 700 | — 22.0 | |
| 800 | — 19.5 | |
| 900 | — 23.5 | |
| 1,000 | — 29.0 | |
| 1,050 | — 31.0 | |

CROSS-SECTION NO. 141.

No. 151 of 1888.

| | | |
|---|---|---|
| 0 | 89.0 | Origin: Lat. 42° 02′ 28″.3 |
| 20 | 91.1 | Long. 70° 03′ 52″.9 |
| 40 | 93.2 | Azimuth, 222° 50′ |
| 60 | 100.5 | |
| 80 | 107.5 | |
| 85 | 111.0 | |

*Cross-Sections of the Shore of Cape Cod, etc.*—Continued.

CROSS-SECTION NO. 141—Continued.

No. 151 of 1888.

| Distance from origin. | Height above or below mean sea-level. | Remarks. |
|---|---|---|
| *Metres.* | *Feet.* | |
| 90 | 114.5 | |
| 120 | 118.8 | |
| 140 | 119.4 | |
| 150 | 121.6 | |
| 160 | 117.6 | |
| 180 | 106.9 | At bluff station. |
| 230 | 16.9 | At foot of bluff. |
| 238 | 16.9 | At top of bench. |
| 239 | 13.1 | At foot of bench. |
| 244 | 9.8 | |
| 260 | 11.8 | At crest of beach and beach station. |
| 282 | 4.5 | |
| 300 | — 2.0 | |
| 400 | — 7.5 | |
| 500 | — 16.5 | |
| 600 | — 21.0 | |
| 700 | — 22.0 | |
| 800 | — 20.0 | |
| 900 | — 23.5 | |
| 940 | — 26.5 | |

CROSS-SECTION NO. 142.

No. 153 of 1888.

| | | |
|---|---|---|
| 0 | 73.3 | Origin: Lat. 42° 02′ 35″.0 |
| 20 | 70.5 | Long. 70° 04′ 02″.6 |
| 40 | 68.1 | Azimuth, 221° 05′ |
| 60 | 67.7 | |
| 80 | 66.8 | |
| 100 | 70.0 | |
| 120 | 75.0 | |
| 130 | 76.1 | |
| 150 | 74.2 | |
| 180 | 80.7 | |
| 200 | 87.7 | At bluff station. |
| 234 | 18.5 | At foot of bluff. |
| 245 | 18.5 | At top of bench. |
| 246 | 14.8 | At foot of bench. |
| 251 | 11.3 | At beach station. |

CROSS-SECTION NO. 142—Continued.

No. 153 of 1888.

| Distance from origin. | Height above or below mean sea-level. | Remarks. |
|---|---|---|
| *Metres.* | *Feet.* | |
| 265 | 11.5 | At crest of beach. |
| 276 | 5.2 | |
| 300 | — 2.5 | |
| 400 | — 9.0 | |
| 500 | —19.5 | |
| 600 | —25.0 | |
| 700 | —20.0 | |
| 800 | —22.0 | |
| 900 | —27.5 | |
| 975 | —33.0 | |

CROSS-SECTION NO. 143.

No. 155 of 1888.

| | | |
|---|---|---|
| 0 | 83.9 | Origin: Lat. 42° 02′ 41″.5 |
| 20 | 83.7 | Long. 70° 04′ 12″.1 |
| 40 | 82.1 | Azimuth, 221° 05′ |
| 60 | 81.7 | |
| 70 | 80.5 | |
| 90 | 74.6 | |
| 110 | 65.4 | |
| 130 | 70.9 | |
| 150 | 86.2 | |
| 170 | 90.0 | |
| 180 | 86.2 | |
| 200 | 66.5 | At bluff station. |
| 229 | 18.7 | At foot of bluff. |
| 245 | 17.6 | At top of bench. |
| 246 | 12.0 | At foot of bench. |
| 250 | 11.0 | At beach station. |
| 263 | 11.5 | At crest of beach. |
| 282 | 5.1 | |
| 300 | — 7.5 | |
| 400 | — 7.5 | |
| 500 | —16.0 | |
| 600 | —23.0 | |
| 700 | —19.5 | |
| 800 | —21.5 | |
| 900 | —26.5 | |
| 1,000 | —32.0 | |

TABLE A.—*Elevation of Bench-Marks on Cape Cod, Massachusetts, determined by geodetic leveling in 1887–'88–'89.*

| Number and locality of bench-mark. | Elevation above mean sea-level. | |
|---|---|---|
| | *Metres.* | *Feet.* |
| B. M. I, at Nausett Harbor Entrance | 2.7766 | 9.110 |
| B. M. II, at Nausett Harbor Entrance | 7.9376 | 26.042 |
| B. M. III, at East Orleans Life-Saving Station | 9.5022 | 31.175 |
| B. M. IV, on Chatham North Light-House | 12.3473 | 40.510 |
| B. M. V, at Harding's Beach Light-House | 2.3545 | 7.725 |
| B. M. VI, at Harding's Beach Wharf | 1.6286 | 5.343 |
| B. M. VII, near Nausett Life-Saving Station | 19.4289 | 63.743 |
| T. B. M. 28, at Nausett Life-Saving Station | 10.2798 | 33.727 |
| B. M. VIII, at Nausett Three Lights | 21.7302 | 71.294 |
| B. M. IX, at Nausett Three Lights | 22.3504 | 73.329 |
| B. M. X, at Nausett Three Lights | 20.3704 | 66.832 |
| T. B. M. 38, 1½ miles north of Nausett Three Lights | 23.1229 | 75.863 |
| T. B. M. 50, on Cahoon's Hollow Life-Saving Station | 15.8915 | 52.138 |
| B. M. XI, at Newcomb's Hollow | 8.1305 | 26.675 |
| T. B. M. 56, on Pamet River Life-Saving Station | 7.4806 | 24.543 |
| B. M. XII, near Pamet River Life-Saving Station | 2.9899 | 9.810 |
| B. M. XIII, on Highland Light-House | 42.1653 | 138.339 |
| B. M. XIV, near Highland Light-House | 37.5770 | 123.285 |
| T. B. M. 64, near Highland Light-House | 39.2025 | 128.618 |

## DESCRIPTION OF BENCH-MARKS.

### *B. M. I.*

At the entrance into Nausett Harbor. The reference is the top of a copper bolt, one-half inch in diameter, set with lead into a large granite bowlder at the water's edge, about 200 metres northwest of the water-fence on which the tide-gauge was placed. The bowlder is on land owned by Oliver Doane and in front of a small cottage on the bluff.

Bench-marks I and II are within 400 metres of each other.

Established September 28, 1887.

### *B. M. II.*

At the entrance into Nausett Harbor. The reference is the top of a copper bolt one-half inch in diameter, set into a large granite bowlder (with lead), which is situated on the slope of the bluff about 400 metres to the southward of B. M. I. The B. M. is on the larger of the two bowlders lying side by side. The top of the bolt was hammered, giving it a ragged appearance.

Established September 28, 1887.

### *B. M. III.*

Situated on a bowlder about 80 paces west of the flag-staff of the East Orleans Life-Saving Station, Cape Cod, Massachusetts. The reference is the top of a copper bolt, about one-half inch in diameter, let into the top of the granite bowlder, which is about 5 feet square, and projects from 1 to 1½ feet above the ground. The bolt projects nearly one-half inch above the face of the bowlder, and is fastened into it with brimstone.

Established October 19, 1887.

*B. M. IV.*

On Chatham North Light-House. The reference is a square, horizontal surface inclosed by lines cut into the top facing of the concrete foundation just south of the point where the lightning-rod enters the ground. The B. M. surface is about 1½ inches square, and around it are cut the letters U. S. C. S. (above) and the figures 87 (below).

Established September 17, 1887.

*B. M. V.*

This B. M. is on the southeast corner of the dwelling at Stage Harbor Light-House, Cape Cod, Massachusetts. The reference is the middle of the horizontal mark cut in the west face of the corner brick, fourth layer from the top. There are also cut into the brick the letters U. S. C. & G. S. above and the figures 87 below the mark.

Established September 13, 1887.

*B. M. VI.*

This B. M. is on the southwest corner of Howe's packing stand at Stage Harbor, Cape Cod, Massachusetts. The reference is the middle of the center nail of the seven that are driven in the form of a "cross" into the foundation post of the building. The letters U. S. C. S. are cut into the post above and the figures 87 below the cross.

Established September 13, 1887.

*B. M. VII.*

On Enoch Rock, about three-fourths of a mile to the westward of the Nausett Life-Saving Station at North Eastham, Cape Cod, Massachusetts. The reference is the top of a copper bolt, one-half inch in diameter, sunk into the eastern face of Enoch Rock, and about 7 feet from the ground. The bolt is fastened into the rock with brimstone and projects about 1 inch above the surface. The letters B. M. are cut into the face of the rock just above the bolt. This rock is one of those bowlders of the glacial period, the part above the ground being about 15 feet in height and about 100 feet in circumference at the base.

Established July 14, 1888.

*T. B. M. 28.*

This T. B. M. is on the northwest corner of the Nausett Life-Saving Station, Cape Cod, Massachusetts. The reference is the horizontal plane touching the heads of the three nails driven in the form of a triangle in the flooring of the piazza just outside of the corner post.

Established July 16, 1888.

*B. M. VIII.*

This B. M. is at Nausett Three Lights, Cape Cod, Massachusetts. The reference is the top of the granite post marking the northeast boundary of the light-house reservation; the top of the post is dressed, and has the letters U. S. L. H. E. cut in its upper face; the rod was held at the intersection of the diagonals joining the corners.

Established July 14, 1888.

*B. M. IX.*

This B. M. is at Nausett Three Lights, Cape Cod, Massachusetts. The reference is the horizontal line cut in the end of a copper bolt about three-sixteenths of an inch in diameter set in one of the bricks of the foundation wall at the northeast corner of the frame dwelling of the light-keeper. It is in the third brick, counting from the top course; in the fourth course are the letters B. M.

Established August 21, 1888.

*B. M. X.*

At Nausett Three-Lights, North Eastham, Cape Cod, Massachusetts. The reference is the top of the granite post which marks the northwest corner of the light-house reservation. The upper portion of the post is dressed, the top surface being about 6 inches square, and has the letters U. S. L. H. E. cut in it; the rod was held at the intersection of the diagonals joining the corners.

Established August 21, 1888.

*T. B. M. 38.*

This T. B. M. is on a granite stone set to mark a point on the boundary line between the towns of Eastham and Wellfleet, Cape Cod, Massachusetts. It is about 1½ miles north of Nausett Three Lights, standing within 15 metres of the top of the bluff facing the ocean. The stone is firmly planted in the sand, and at present projects 2 feet above the ground. It measures 8 inches on the face, and is 5 inches thick; on the western side is cut this symbol $\frac{W|E}{18|86}$; a notch was hammered into the top edge of the stone and the rod held therein.

Established July 30, 1888.

*T. B. M. 50.*

On the east face of the northeast corner of the main building of the Cahoon's Hollow Life-Saving Station, Wellfleet, Cape Cod, Massachusetts.

It consists of a copper bolt one-half inch in diameter driven into the corner board about 8 inches above the water-table and opposite the middle of the second layer of shingles (counting from the bottom) with which the side of the building is covered. The bolt is driven flush with the face of the board, and is smooth; the horizontal line cut into it (thus ⊖) is the reference.

Established October 6, 1888.

*B. M. XI.*

On top of the eastern boundary stone between the towns of Wellfleet and Truro, Cape Cod, Massachusetts. The reference is the top of a copper bolt, five-eighths of an inch in diameter, set in the stone. The stone is of black and white granite, 10 by 12 inches square, and at this date it projects 2½ feet out of the ground. The southern face of the stone is marked W, with 1887 under it; the northern face T, with 1887 under it, and on the eastern face 1887. The letters only are cut into the stone, the dates are painted in black. The stone is 165 metres from the high-water line of the beach, in a westerly direction. The top of the bolt is filed smooth.

Established September 5, 1888.

*T. B. M. 56.*

This T. B. M. is on the north side of the northeast corner of the Pamet River Life-Saving Station, Cape Cod, Massachusetts. The reference is a horizontal line cut in the head of a copper nail driven in the corner board opposite the seventh course of shingles, counting from the water-table.

Established August 31, 1888.

*B. M. XII.*

In a field owned by John Joseph, a Portuguese, near the north bank of the Pamet River, and about 600 metres west of the Pamet River Life-Saving Station, Cape Cod, Massachusetts. The reference is the top of a copper bolt, one-half an inch in diameter, set in the top of a granite bowlder which projects about 1 foot above the ground and is about 9 feet in circumference.

Established October 2, 1888.

*B. M. XIII.*

On Highland Light-House tower, Highlands of Truro, Cape Cod, Massachusetts. The reference is the middle of a horizontal mark cut in one of the granite window-sills along with the letters B. M.

Established July 19, 1889.

*B. M. XIV.*

In a pasture owned by I. M. Small, about 360 metres back from Highland Light-House. The reference is the top of a copper bolt leaded in a large rock. This rock is one of three in the immediate vicinity, and has the letters B. M. cut in top.

Established July 19, 1889.

*T. B. M. 64.*

This T. B. M. is the geometrical center of the top of the stone post marking the northwest corner of Highland Light-House grounds. This post is of granite, having a dressed top, with the letters U. S. L. H. E. cut in it. It is also just at the corner of the platform in front of the Highland Signal Station.

Established July 2, 1889.

Blank page retained for pagination

# APPENDIX NO. 14.—1889.

## RECENT CHANGES IN THE SOUTH INLET INTO EDGARTOWN HARBOR, MARTHA'S VINEYARD.

A report by HENRY L. WHITING, Assistant.

WEST TISBURY, DUKES COUNTY, MASS., *August* 15, 1889.

DEAR SIR: I present herewith a report on my recent resurvey of the south opening or inlet into Edgartown Harbor, on Martha's Vineyard, and also of the changed location of the dry shoal of "Skiffs Island" lying off the southern entrance of Muskeget Channel.* This latter feature was not included in the original scheme of the present resurvey, but finding it denoted the resultants of important tidal and sea-wave action so near this channel-way, I included the determination of its present position in connection with the changes in the south inlet of Edgartown Harbor.

There has been more change in all of these features of the coast than was anticipated, although those that have taken place are in accord with the predictions based on our knowledge of former changes and the laws which seem to govern and produce the normal "set" of the tidal currents along this particular section of the shore, as well as the prevailing sea-dash. The degree of change, however, has been greater, as before remarked, than that which has occurred in former corresponding periods of time. To what influences these more rapid changes and movements are due, I have no data to present in explanation, unless it be the less substantial nature and condition of the beaches themselves, and, possibly, even probably, the more than ordinarily violent storms of the last year. The heavier breakers upon this beach have tended to cut down the sand hills and smaller bluffs which characterized the previous condition of the beach, so that it has been more subject to overflow, and this, in turn, has left the sands in a less firm and compact state.

Between the last resurvey of this inlet, by Assistant W. I. Vinal, in 1887, and my last resurvey in June, 1889, an interval of about two years, the westerly chop of the inlet has worked eastwardly about 3,450 feet, and the east chop of the inlet about 3,750 feet in the same direction, leaving a present width of inlet between its outer chops of about 2,050 feet, against the width of 1,650 feet in 1887. In the present opening, however, a sand island has formed, or remains as part of the original beach, near the westerly point and lying within and lapping by it to the westward, so that there are now two channel-ways of access into the bay and harbor within. It is interesting to note that this condition of the inlet resembles that which existed at the time of our first survey, in 1846, and also that shown by Des Barres in his surveys of 1776. We are able to account for the present condition of the inlet from the facts of its formation, which was caused by a new opening to the west of the older one, leaving a section of the original beach between them. It is a remnant of this section of the beach which constitutes the small island above referred to. The outer westerly point of the inlet will, undoubtedly, continue to move eastward, and will probably be beaten inward by the sea dash until it unites with the sand island, and thus closes the smaller westerly channel-way.

* See also Appendix No. 9—1886.

It is reasonable to predict, in view of the past movement of these beaches and the forces acting on them, that nature will repeat itself, and that the easterly point of the inlet will move eastward past the "Wasque Hills," so called, leaving a long canal-shaped passage-way between an outer beach so formed and the fast land of Chappaquiddick. Perhaps this long passage-way will extend to the easterly line of Chappaquiddick, as it did previous to the closing of the former inlet in 1869. There is, however, more liability now than then of a new opening breaking through at points along the main beach, which is much lower than it has been for many years. In my own experience there has been no time since 1846 when the whole extent of beach across the face of Cotamy Bay—a distance of about 3½ miles—presented so feeble a barrier against the ocean waves and breakers as it does now. This fact suggests the question of the consideration of artificial means—by wind hedges, etc.—of building up the beach to a height that would better resist or prevent the heavier breakers from dashing entirely over it, as they probably would do in its present condition.

The mass of the beach which has formed across the site of the inlet of 1887 is about 400 feet outside—seaward—of the alignment of the former beach, while east of the present opening the former beach has been cut away to about the same extent. The extreme easterly point of the new inlet has been beaten in, and partially fills up the former southeast corner of the bay. The general position of the shore-line of Wasque Point remains nearly the same as in 1886. The easterly face of Chappaquiddick near the point has made outward—eastward—about 100 feet.

The change in position, size, and shape of Skiffs Island illustrates quite markedly the forces of wave and current action on such exposed sandy shoals. The result is interesting and important as demonstrating the instability of such material in such localities. While the mass of sands forming the large extent of the shoals of which Skiffs Island is the summit and easterly head, as it were, are kept in general place by the complicated forces peculiar to this locality, they are ever subject to local changes. At the time of the survey of 1886, Skiffs Island had become so much larger and higher than it had been for many previous years that it led to the suggestion of means for its more permanent preservation, yet during the interval of the three following years it has been entirely swept away as an island above high water and been again thrown up above that level, but in another place. The main mass of the island is considerably west of its former position, the general distance being about 225 feet. Its present area is but about one-third of its size in 1886.

I state these particulars of change because of the physical conditions and influences peculiar to this locality—phenomena which have already received so much attention and consideration. In his able reports* Professor Mitchell has stated the peculiar physical relations of the tides of the Vineyard and Nantucket Sounds to those coming upon the south shores of the islands of Martha's Vineyard and Nantucket, and the circulation of currents through Edgartown Harbor and the former opening in Cotamy Beach. I will not, therefore, discuss these subjects in my report. It seems, however, pertinent to remark that the question of controlling these elements by artificial means is one of much uncertainty and grave importance. The unsuccessful expenditure by the General Government of $22,000 in attempting to open a south inlet into Edgartown Harbor which natural forces afterward effected, is a fact of much significance as bearing on the question of the expediency or inexpediency of such undertakings.

I append hereto a tracing from the field-sheet (illustration No. 30) used in the last three surveys in order to show for your more convenient reference the changes referred to in my report.

Very respectfully submitted.

HENRY L. WHITING,
*Assistant, Coast and Geodetic Survey.*

Prof. T. C. MENDENHALL,
*Superintendent Coast and Geodetic Survey,*
*Washington, D. C.*

---

* Appendices 37, Report 1856; and 15, Report 1869.

# APPENDIX NO. 15.—1889.

## RESULTS OF SPIRIT-LEVELING BETWEEN TIDE-WATER AT ANNAPOLIS, MD., AND THE CAPITOL BENCH-MARK AT WASHINGTON, D. C., FROM OBSERVATIONS IN 1875 BY F. W. PERKINS, ASSISTANT.

Report by C. A. SCHOTT, Assistant.

COAST AND GEODETIC SURVEY OFFICE,
*Computing Division, March* 20, 1889.

At the time this leveling operation between Annapolis and Washington was carried on, it was intended that it should serve for the basis of the heights of the stations of the primary triangulation in this vicinity,* which stations had been connected by measures of zenith distances. For this particular purpose no very high accuracy in the levels was needed, but when in 1877 it was decided to carry into effect the plan of running a line of precise or geodetic levels across the country† along the thirty-ninth parallel, from ocean to ocean, the highest accuracy attainable in such an operation was called for. At the same time it was seen that the Annapolis-Washington line could be included with great advantage as an *independent link* to connect the proposed transcontinental line with the Atlantic, or what comes to the same thing, with the Chesapeake Bay level. It was also found that the accuracy of the measure was just sufficient to make the result acceptable for the new application. Check tidal observations, however, were required, and these were supplied, incidentally, by Lieut. M. L. Wood, U. S. N., in 1888, while engaged on a hydrographic resurvey in the vicinity of Annapolis. Before this time Washington had already been connected by precise levels with Hagerstown, Md., and thence with Sandy Hook, N. J., forming a junction of 359.70 statute miles‡ (578.87 kilometres) from tide-water at Sandy Hook to Washington, D. C. The particulars of the work are given under the usual heads, as follows:

*Observer and date of leveling.*—The observations were made by F. W. Perkins, Assistant; also a side line from Annapolis to trigonometrical station Taylor was leveled, and a second side line from trigonometrical station Wilson to Hill, the latter line by J. De Wolf, aid. Leveling commenced November 9 and terminated December 15, 1875. Assistant J. B. Weir leveled between the Navy-Yard and the Capitol at Washington in June, 1880, and again in June, 1884.

*Route of levels.*—The line starts from a bench-mark near the Annapolis tide-gauge, follows the Annapolis railroad as far as Odenton; thence by the Baltimore and Potomac Railroad via Bowie to the Washington Navy-Yard. The Navy-Yard flag-staff station was subsequently connected with the newly (1884) established bench-mark at the Senate wing of the Capitol. Distances leveled over from Annapolis to Navy-Yard, Washington, 60.837 kilometres; thence to the Capitol,

* C. S. Rep. for 1876, p. 29.

† C. & G. S. Rep. for 1878, p. 24.

‡ Sandy Hook, N. J., to Hagerstown, Md., 441.372 kilometres; Hagerstown to Georgetown, D. C., 129.816 kilometres; Georgetown to Washington, 7.681 kilometres; total, 578.869 kilometres.

2.343 kilometres; total, 63.180 kilometres; making the length of the whole circuit from tide-water at Annapolis to tide-water at Sandy Hook 642.05 kilometres, nearly 399 statute miles.

*Connection with the half-tide level of the ocean.*—The width of the connection of the Atlantic Ocean with the Chesapeake Bay, about 11 miles across the entrance, the depth of the water of the bay and its general straight direction, and the paucity of shoals, islands, or other obstructions in the direction of propagation of the tide-wave, render it tolerably safe to assume that the average levels of the bay and of the ocean outside are one and the same. At Annapolis the waters of the harbor are in free communication with the bay. The Atlantic tide rolling into the bay requires about $9^h\ 13^m$ to traverse the 148 statute miles between the Capes and Annapolis,* and is accompanied by a diminution of the average range of the tide from 2.8 feet at the Capes to 0.8 foot at Annapolis.

We have two series of tidal observations at Annapolis available for our purpose; the first by Assistant F. W. Perkins began November 24 and ended December 18, 1875; the second by Lieut. M. L. Wood, U. S. N., began August 16 and ended September 18, 1888. These series were reduced and discussed in the Tidal Division of the Office, and the results were communicated by Mr. A. S. Christie, in charge of that division. We have accordingly:

| | | Feet. |
|---|---|---|
| (I) | Mean of 47 high waters, observed in 1875, reads on Perkins's staff | 3.05 |
| | Mean of 46 low waters, observed in 1875, reads on Perkins's staff | 2.23 |
| | Mean half-tide level reads | 2.64 |
| | Mean range of tide | 0.82 |

Perkins's bench-mark above zero of gauge, 7.09 feet; hence bench-mark above the half-tide level, 4.45 feet; correction for annual inequality of tides,† —0.32 foot; hence Perkins's bench-mark above (corrected) half-tide level, 4.13 feet.

(II) Mean of 20 high waters, observed in 1888, reads on Wood's staff 3.81 feet, but using all the information that may be had from the half-hourly observations, 41 high waters read 3.96 feet. Which is adopted.

Mean of 56 low waters reads 3.19, and mean of 65 low waters 3.18; mean adopted, 3.185; hence mean half-tide level reads 3.57 feet.

Mean range of tide,‡ 0.78 foot. Wood's bench-mark above zero of gauge, 7.10 feet; hence bench-mark above the half-tide level, 3.53 feet; correction for annual inequality of tides, +0.14 foot; hence Wood's bench-mark above (corrected) half-tide level, 3.67 feet. Perkins's bench-mark *above* Wood's bench-mark, 0.518 foot; hence Perkins's mark above the half-tide level, 4.19 feet.

Mean of the two values I and II, Perkins's bench-mark above the half-tide level, 4.16 feet, or 1.268 metres.

*Instrument.*—The Würdemann pivot level No. 21; aperture of telescope, 3.5 centimetres; focal length, 36.0 centimetres; magnifying power, 25 (nearly); it has a glass diaphragm of three horizontal lines intersected by a vertical line. The angular distance of the horizontal extreme lines was determined on November 4, 1875, at distances of the staff of 50, 100, and 150 metres, and found

* It does not appear that the formula for the velocity $v$ of propagation of a free wave in water of depth $p$, viz, $v = \sqrt{gp}$, applies to this case, since the calculated depth $p$ comes out but 3 fathoms, whereas the average soundings make it about 6¼ fathoms.

† The influence of the annual inequality of the tide in height was at first not suspected, but became manifest when the two results for mean level, as independently derived in 1875 and 1888, were compared. Mr. Christie then furnished me with the monthly ordinates of this inequality, as found from one year's observation at Old Point Comfort, Va., where its semi-amplitude amounts to 0.35 foot.

‡ The Tidal Division also communicated the following values: From 262 high waters and corresponding low waters observed in 1844, rise and fall (or range) 0.88 foot—Lieut. G. S. Blake, observer; again, from 106 high waters and 105 low waters observed in 1852–'53, rise and fall 0.86 foot; and from 52 high waters and 50 low waters observed by W. W. Harding in 1870–'71, rise and fall 0.87 foot. The mean rise and fall from these several series is 0.83 foot, which is probably the smallest range on the bay, the gradual contraction of its width and the diminution in depth towards the head producing a corresponding increase of the ranges. It is a noteworthy fact that the tidal wave takes very nearly twelve hours to traverse the whole length of the bay, so that we have simultaneously high water at the entrance and at the head of the bay; and this will probably explain, by the principle of reflection and of interference, the difference noted in the observed small velocity of propagation of wave and the velocity apparently, by theory due to the average depth of the water. The length of the wave is about 185 statute miles.

to equal 33′ 12″.5; the value of one division of the level was 5″. [This instrument has since been converted into geodetic level No. 1, and is now known by the latter designation.]

*Method of observing.*—The staff, which was metrically graduated, was directly read off by the observer for each of the three focal lines; the inclination of the telescope was determined by means of the spirit-level; the distance of the instrument from the staff was on the average 100 metres, and forward and backward sights were equidistant. The whole line was leveled twice, independently, once in a forward and once in a backward direction.

*Computation and results.*—The field computation was made by F. W. Perkins, the office computation by E. H. Courtenay, and the probable error was deduced by L. A. Bauer, who also prepared the abstract of the results for publication.

*Results of spirit-leveling between tide-water at Annapolis, Md., and the Capitol bench-mark at Washington, D. C., from observations in* 1875, 1880, *and* 1884, *by Assistants F. W. Perkins and J. B. Weir.*

| Date. | | Bench-marks. | | Distance. | | Difference of height between bench-marks. | | | Discrepancy. | | Height of bench-mark above mean Chesapeake Bay level. |
|---|---|---|---|---|---|---|---|---|---|---|---|
| | | From | To | Between successive bench-marks. | From initial mark. | Direction of measure. Forwards. | Direction of measure. Backwards. | Mean. | Partial. "F."–"B." | Total. | |
| 1875. | | | | *Km.* | *Km.* | *Metres.* | *Metres.* | *Metres.* | *Mm.* | *Mm.* | *Metres.* |
| Nov. | | | *a* | | 0.000 | | | | | 0 | + 1.268 |
| -- | 30 | *a* | XIV | 0.026 | 0.026 | -------- | − 0.636 | − 0.636 | ------ | 0 | + 0.632 |
| 30 | 30 | XIV | XIII | 0.849 | 0.875 | +11.986 | +11.975 | +11.980 | +11 | + 11 | +12.612 |
| 30 | 24 | XIII | XII | 0.394 | 1.269 | + 0.451 | + 0.447 | + 0.449 | + 4 | + 15 | +13.061 |
| 24 | 29 | XII | XI | 3.288 | 4.557 | + 8.878 | + 8.877 | + 8.878 | + 1 | + 16 | +21.939 |
| 25 | 25, 27, 29 | XI | X | 11.767 | 16.324 | + 8.923 | + 8.962 | + 8.942 | −39 | − 23 | +30.881 |
| 22 | 22 | X | IX | 8.050 | 24.374 | +18.976 | +19.005 | +18.990 | −29 | − 52 | +49.871 |
| 20 | 20 | IX | VIII | 4.167 | 28.541 | −24.404 | −24.381 | −24.392 | −23 | − 75 | +25.479 |
| 19 | 19 | VIII | VII | 6.705 | 35.246 | +19.807 | +19.793 | +19.800 | +14 | − 61 | +45.279 |
| 18 | 18 | VII | VI | 3.274 | 38.520 | + 5.244 | + 5.275 | + 5.260 | −31 | − 92 | +50.539 |
| 15 & 16 | 15 | VI | V | 6.404 | 44.924 | −10.128 | −10.153 | −10.140 | +25 | − 67 | +40.399 |
| 13 | 13 | V | IV | 3.636 | 48.560 | −22.500 | −22.491 | −22.496 | − 9 | − 76 | +17.903 |
| 12 | 13 | IV | III | 7.211 | 55.771 | − 6.284 | − 6.263 | − 6.274 | −21 | − 97 | +11.629 |
| 9 | 9 | III | II | 3.852 | 59.623 | − 9.324 | − 9.311 | − 9.318 | −13 | −110 | + 2.311 |
| 9 | 9 | II | I | 1.214 | 60.837 | + 9.586 | + 9.590 | + 9.588 | − 4 | −114 | +11.899 |
| CONNECTION OF B. M. I. (NAVY-YARD FLAG-STAFF) WITH CAPITOL B. M., BY J. B. WEIR IN 1880 AND 1884. | | | | | | | | | | | |
| 1880. | | | | | | | | | | | |
| June. | | | I or 5 | | 60.837 | | | | | 0.0 | +11.899 |
| 11 & 14 | | I or 5 | 4 | 0.937 | 61.774 | − 0.4028* | − 0.4014* | − 0.4021 | − 1.4 | − 1.4 | +11.497 |
| 10, 11, 12 & 14 | | 4 | 3 | 0.433 | 62.207 | − 2.3794* | − 2.3780* | − 2.3787 | − 1.4 | − 2.8 | + 9.118 |
| 10, 11, 12 & 14 | | 3 | 2 | 0.561 | 62.768 | +12.4544* | +12.4554* | +12.4549 | − 1.0 | − 3.8 | +21.573 |
| 10 12 & 14 | | 2 | 1 | 0.338 | 63.106 | + 5.6100* | + 5.6095* | + 5.6098 | + 0.5 | − 3.3 | +27.183 |
| 1884. | | | | | | | | | | | |
| June. | | | | | | | | | | | |
| 5 | | 1 | Capitol B. M. (A) | 0.074 | 63.180 | + 0.4355* | + 0.4346* | + 0.4350 | + 0.9 | − 2.4 | +27.618 |

* Mean of two determinations.

*Results of spirit-leveling between tide-water at Annapolis, Md., and the Capitol bench-mark at Washington, D. C., etc.*—Continued.

| Date. | Bench-marks. From | Bench-marks. To | Distance. Between successive bench-marks. | Distance. From initial mark. | Difference of height between bench-marks. Direction of measure. Forwards. | Difference of height between bench-marks. Direction of measure. Backwards. | Difference of height between bench-marks. Mean. | Discrepancy. Partial. "F."–"B." | Discrepancy. Total. | Height of bench-mark above mean Chesapeake Bay level. |
|---|---|---|---|---|---|---|---|---|---|---|
| **BRANCH LINES, BY F. W. PERKINS.** | | | | | | | | | | |
| 1875. | | | *Km.* | *Km.* | *Metres.* | *Metres.* | *Metres.* | *Mm.* | *Mm.* | *Metres.* |
| Nov. | | XIV | | | | | | | | + 0.632 |
| 30 ---- | XIV | *b* | 0.020 | | + 0.519 | -------- | + 0.519 | -------- | | + 1.151 |
| Dec. 1 1 | XIV | Top of Ferry Wharf gauge. | ----- | | — 0.163 | — 0.163 | — 0.163 | 0 | | + 0.469 |
| 1 1 | Top of Ferry Wharf gauge. | Taylor | 2.014 | | + 28.500 | +28.494 | +28.497 | + 6 | | +28.966 |
| | | IV | | | | | | | | +17.903 |
| 4, 6, 10–15 | IV | Hill. | 5.971 | | +66.139 | +66.161 | +66.150 | —22 | | +84.053 |
| **BRANCH LINE, BY A. BRAID.** | | | | | | | | | | |
| 1888. | | *a* | | | | | | | | + 1.268 |
| Dec. 7 | *a* | Wood's | 0.000 | | — 0.158 | — 0.158 | — 0.158 | 0 | | + 1.110 |
| **BRANCH LINE, BY J. W. DONN.** | | | | | | | | | | |
| 1889. | | Wood's. | | | | | | | | + 1.110 |
| January 14 | Wood's | 5 S. R. | | | + 1.758 | + 1.759 | + 1.758 | | | + 2.868 |
| January 14 | 5 S. R. | 1 S. R. | | | + 2.403 | -------- | | | | + 5.271 |
| January 14 | 5 S. R. | Obs. | | | + 4.146 | -------- | | | | + 7.014 |
| January 14 | 5 S. R. | Hern. | | | + 6.031 | -------- | | | | + 8.899 |
| **BRANCH LINE, BY C. A. SCHOTT.** | | | | | | | | | | |
| 1863. | | 5 or I | | | | | | | | +11.899 |
| Feb. 7 | 5 or I | Tidal B. M. at Navy-Yard. | | | —10.552 | —10.543 | —10.548 | — 9 | | + 1.351 |

*Results of spirit-leveling between tide-water at Annapolis, Md., and the Capitol bench-mark at Washington, D. C., etc.*—Continued.

| BRANCH LINES, BY J. B. WEIR. | | | | | | | | | | |
|---|---|---|---|---|---|---|---|---|---|---|
| Date. | Bench-marks. | | Distance. | | Difference of height between bench-marks. | | | Discrepancy. | | Height of bench-mark above mean Chesapeake Bay level. |
| | From | To | Between successive bench-marks. | From initial mark. | Direction of measure. Forwards. | Direction of measure. Backwards. | Mean. | Partial. "F."–"B." | Total. | |
| 1880. | | | *Km.* | *Km.* | *Metres.* | *Metres.* | *Metres.* | *Mm.* | *Mm.* | *Metres.* |
| June. | | 2 | | | | | | | | +21.573 |
| 16 -- | 2 | Old C. S. Office. | 0.102 | | + 1.3801* | | | -------- | | +22.953 |
| 14 -- | 2 | New C. S. Office. | 0.076 | | + 2.1511* | | | -------- | | +23.724 |
| 1884. | | | | | | | | | | |
| June. | | 1 | | | | | | | | +27.183 |
| 7 -- | 1 | Eng. B. M. | ---- | | + 0.4405 | | | | | +27.623 |
| | | Capitol. | | | | | | | | +27.618 |
| -- 7 | Cap. | Eng. B. M. | ---- | | | + 0.0073 | | -------- | | +27.625 |
| | Mean Eng. B. M. | | | | | | | | | +27.624 |

* Mean of two determinations.

ACCURACY OF THE PRECEDING RESULTS.

Estimated in the usual way, we find the mean and probable errors as depending on the differences in height of the several bench-marks in the forward and return measures as follows: From comparison of results at thirteen intermediate marks we get the mean (square) error of a single leveling in one kilometre $m_{,} = \sqrt{\frac{1}{2n}\left[\frac{dd}{s}\right]} = \pm$ 6.52mm, the probable error of double leveling of one kilometre $r_{,,} = \pm$ 3.11mm, and the probable error of the resulting difference of height for the whole line $r = r_{,,} \sqrt{S} = \pm$ 24.2mm. To this must be added the probable error of the adopted average sea-level as derived from the tidal observations. This can only be estimated, and may be taken = ± 25mm; hence, resulting height of bench-mark at the Senate wing of the Capitol at Washington as deduced from the Annapolis line, 27.618 ± 0.035 metres, or 90.61 ± 0.11 feet.

*Description of permanent bench-marks and tide-gauges between Annapolis, Md., and the Capitol at Washington, D. C.*

*a.*—Perkins's tidal bench-mark at Annapolis, Md. On southwest corner of stone door-sill of Moss's chandler store, No. 23 (now No. 2) Market Space. Top of step.

*Wood's.*—A horizontal line directly below B. M. *a.* On side of step 0.158 metre below it. Marked U. S. C. & G. S.—M. L. W. '88.

*b.*—At Annapolis, Md. On granite block in foundation at northwest corner of brick building designated "D. M. Sprogle's Lumber, Brick & Lime Yard." Building torn down between 1876 and 1880.

*Description of four bench-marks in Naval Academy at Annapolis, Md.*

5 *S. R.*—On front door-sill of house No. 5, Stribling Row, 7¾ inches from west door-frame, 2 inches from edge of step, and 14 inches from west end of step.

1 *S. R.*—On projecting base, about 1 metre above ground, at northwest corner of house No. 1, Stribling Row.

*Obs.*—On center of top of stone pier, 8 feet southwest of front of Observatory building.

*Hern.*—On northeast side of base of Herndon Monument, midway of length, about 2 inches out from face of shaft, and about 3 feet above ground.

*Description of bench-marks between Annapolis and Washington, D. C.*—Continued.

*XIV.*—Five-foot mark on Perkins's tide-gauge (1875), at northwest corner of Market Square Basin, Annapolis, Md.

*Ferry Wharf Gauge* (1875).—On north side of Severn River, Annapolis, Md.

*Wood's Gauge* (1888).—At northwest corner of Market Square Basin, Annapolis, Md.

*Taylor.*—A trigonometrical station. On top of the hill where signal stood; exact point not recovered.

*XIII.*—At Annapolis, Md. On southwest corner of fourth granite block supporting iron fence around the Governor's house, counting northeast from southwest corner. Marked by a cross cut in stone.

*XII.*—At Annapolis, Md. A cut in east corner of west door-sill of church on West street, opposite Washington Street Market.

*VII.*—On sill of danger-signal at Bowie Station, B. & P. R. R., Maryland.

*IV.*—On west side of arch culvert near pump-house, at Wilson Station, Maryland. Marked thus: ⊗.

*Hill.*—At trigonometrical station.

*II.*—On northeast corner of curb-stone of Navy-Yard Bridge, at east end of, and north side, Washington, D. C.

*I or 5.*—A cross on stone around Navy-Yard flag-staff near entrance gate.

*Tidal B. M.*—Upper surface of stone wall of pier in front of Navy-Yard offices, near steps at boat-house.

*Old C. S. Office.*—Top of stone base-molding separating ground floor from first floor. The precise point is 2 feet from left-hand door-facing. Building now known as "Law House," New Jersey Avenue and C street South.

*New C. S. Office.*—The center of central square in vestibule of main entrance. Building on New Jersey Avenue near B street South.

1.—On flagging in front of east entrance to rotunda of Capitol.

*Capitol B. M.* (A).—On southeast corner of Senate wing. The head of a copper bolt set vertically in water-table on south side of Senate wing, just under the center of window near extreme east end. The bolt is in the center of a square brass plate marked thus: "Capitol Bench-Mark, U. S. Coast and Geodetic Survey, 1884."

*Engineer's B. M.*—On northeast corner of imitation granite pediment forming the first course of masonry in central flight of steps leading up to main entrance of Capitol on the east side. It was originally established in 1815, and was identified in 1884 as the upper surface of the stone course at the northeast angle of the central steps.

# APPENDIX No. 16.—1889.

## GULF STREAM EXPLORATIONS—OBSERVATIONS OF CURRENTS, 1888 AND 1889.

A report by LIEUT. J. E. PILLSBURY, U. S. N., Assistant.

U. S. COAST AND GEODETIC SURVEY, STEAMER BLAKE,
*New York, N. Y., October 19, 1889.*

SIR: I beg to submit a report of the work of the Hydrographic party under my command during the past two seasons in investigating the Gulf Stream currents.

The winter's season of 1888 was devoted to an examination of the waters entering the Caribbean Sea, and permission was granted by your predecessor to continue the research of these currents during the present year, in order to obtain additional data bearing upon the subject before drawing conclusions as to the circulation.

The labors of the party in southern waters were ended in April, in order to take advantage of the good weather of May and June for observations off Cape Hatteras and Nantucket Shoals.

The vessel left New York January 7, 1889, towing the Coast Survey schooner *Ready* to Hampton Roads, and, upon arriving at the Anegada Passage, January 19, began the observations, which were continued with but slight interruptions until the end of the fiscal year. The weather while in the Caribbean was abnormally good, the trades were light, and the seas comparatively smooth. The month of May in northern waters was also exceptionally fine, but in June but little work was executed, and that unsatisfactory. The manner of observing the currents has been the same this season as in the last, no change having been made in either the anchoring gear or current meters.

While en route from Key West to Cape Hatteras an extra anchorage was made in the Straits of Florida off Fowey Rocks for the purpose of making a test of the currents, on a prediction based upon former observation.

Before leaving Key West I wrote the following prediction for April 17 at the proposed place of anchorage in the axis of the stream: "Day's average surface current, about 3½ knots, varying between 2½ and 4 knots. Strongest current about 5 p. m.; slight rise in velocity at 4 a. m." The observations were as follows: Time of maximum velocity, 4.21 p. m. Average of the "slight rise" in velocity, 4.01 a. m. Greatest velocity, 3.41 knots. Least velocity, 2.22 knots. Average velocity for the day, 3.01 knots—a disagreement between the actual and predicted velocities of about 14 per cent. The current curves of this anchorage are shown on illustration No. 41.

Eleven anchorages have been made outside the Caribbean Sea during the two seasons. One north of Barbadoes, No. 32; two east of the St. Lucia passage, Nos. 20 and 21, and eight anchorages between Barbadoes and Tobago, numbered from 1 to 5; all within the limits of the equatorial stream.

At the anchorages most distant from the South American coast the flow was more nearly in the direction of the trade-winds and the velocity less than was found nearer the South American coast.

The strongest set is found close to Tobago, and here the direction of the upper strata is inclined well to the northward. Anchorage 4[a] made this year confirmed the observations of 1888, and also showed the counter or tidal current, which was found in the first season in several instances. At

8.45 a. m. the direction was E. ½ N. at 200 fathoms; about three hours later the depth of the upper flow had become more shallow, so that at 130 fathoms the direction was SE. by S., and at 200 fathoms it had changed to E. by. S. Between 2 and 3 p. m., at 65 fathoms, it had changed to E., 130 fathoms to S. by W., and 200 fathoms to SW. At 5.30 p. m. the 130-fathom current showed a still greater change to the southward and westward. At this time we were obliged to leave the anchorage.

The following table shows the changes in about nine hours' time:

| 30 fathoms. | 65 fathoms. | 130 fathoms. | 200 fathoms. |
|---|---|---|---|
| N. ½ W. | WNW. | WSW. | E. ½ N. |
| N. by W. | WNW. | SE. by S. | E. by S. |
| North | East | S. by W. | SW. |
| N. by W. | | SW. ½ W. | |

It seems to be apparent that the subcurrent was chiefly tidal; that the thickness of the stratum increased and decreased, and probably its direction continued to change to the right through the entire circle.

The evidence of this tidal action was found last year at most of the stations where the lower current changed at times to SE., but at no time was it so marked as to show successive changes in the directions.

The temperatures of the various stations north and south of Barbadoes are shown in the table below:

| Station. | 3½ fathoms. | 15 fathoms. | 30 fathoms. | 65 fathoms. | 130 fathoms. | 200 fathoms. |
|---|---|---|---|---|---|---|
| 32 | 79.44 | 79.28 | 79.22 | 70.22 | 57.63 | 49.75 |
| 1 | 78.0 | 77.5 | 76.12 | 71.25 | 56.0 | |
| 2 | 79.20 | 77.25 | 77.0 | 70.0 | 54.50 | |
| 3 | 79.33 | 77.20 | 76.9 | 64.5 | 51.57 | |
| 4 | 79.71 | 77.69 | 74.29 | 59.92 | 49.79 | |
| 4[a] | 79.75 | 77.63 | 75.62 | 57.62 | 49.17 | 46.50 |
| 5 | 79.63 | 76.25 | 64.9 | 60.08 | 49.75 | |
| 5[a] | 79.43 | 78.57 | 70.36 | 60.63 | 50.37 | |
| 5[b] | 79.62 | 77.65 | 67.64 | 61.29 | 51.25 | |

This shows a slightly cooler surface temperature at the northerly than at the southerly stations, but this difference is not greater than what might be expected at any station on different days.

The differences at the lower depths, however, are very noticeable, and furnish direct evidence of the influence of the South American coast on the moving water. The equatorial stream impinges on the coast, and the colder water from the lower depths is pushed upward on the slope of its shores, lowering the normal temperatures at the various depths below 65 fathoms, and at times even at 30 fathoms. Another instance of this was seen in the passage between Curaçoa and the main-land, where an eddy subcurrent came from the westward between Oruba and Curaçoa.

| | 3½ | 15 | 30 | 65 | 130 | 200 |
|---|---|---|---|---|---|---|
| No. 34 in deep water. | 77.62 | 76.50 | 72.06 | 63.44 | 53.88 | 48.50 |
| No. 35 nearer the coast. | 76.58 | 73.37 | 67.50 | 61.90 | 53.70 | |

After leaving the latter anchorage, which was in 425 fathoms, surface temperatures were taken on a course across the passage from about the 100-fathom curve on the main land side. At this point the temperature was 74°, but it quickly changed to 78° as deep water was reached. The eddy subcurrent evidently pushed its way up the slope, lowering even the surface temperature.

In the equatorial stream, as stated before, the directions of the upper strata change toward the north as we approach the South American coast. It is evidently a resultant of a gentle current to the westward in the average direction of the wind, and a strong current setting along the shore, receiving its final direction from the general course of the coast-line. The former is, I believe, due to the friction of the trade-wind on the surface of the water. The latter current varies in velocity greatly, and is made up of the part of the wind current impinging on the shore and of the water which is thrown to leeward by the sea until it reaches the obstruction whence it must escape by the line of least resistance. A portion probably finds its escape by a counter subcurrent, and a portion augments the shore surface current. At times this current entirely overcomes the normal frictional current in the passage to the west of Barbadoes, and attains a velocity of three or more knots, but it seems to be only after the trades have been blowing with unusual severity. Station 32, about 60 miles north of Barbadoes, was wholly within the "gentle flow," and seemed to be uninfluenced by the South American coast current.

Station No. 1, south of Barbadoes, was apparently a resultant of the two; the surface currents to 30 fathoms depth being under the influence of first one current and then the other, while the lower strata were coming from the southward.

At No. 20 anchorage, about 10 miles to the eastward of the middle of the St. Lucia passage, the average directions found were as follows:

| Depth in fathoms. | Direction. | No. of observations. |
|---|---|---|
| 3½ | WNW. | 16 |
| 15 | WSW. | 15 |
| 30 | WSW. | 15 |
| 65 | NNW. | 6 |
| 65 | SW. | 7 |
| 130 | NE. by N. | 6 |
| 130 | South. | 7 |

It is seen from this table that at this time the surface flow was to the northward and westward, but deflected slightly by the current from the eastward which occupied the intermediate stratum. That at 65 fathoms it was tidal, but influenced by the westerly surface current to deflect the normal directions of the ebb and flow to NNW. and SW., the mean being W. by N., and that at 130 fathoms depth the eddy current out of the Caribbean caused a deflection of its normal ebb and flow to NE. by N. and S., the mean being ESE., which is exactly opposite the surface direction.

At Station 21, about 15 miles farther east, only two observations at each depth could be obtained on account of bad weather; but they were very interesting as showing an indication of the same. The directions were, at 3½ fathoms, WNW.; 15 fathoms, NW. by W.; 30 fathoms, W. by N.; 65 fathoms, WSW., and at 130 fathoms, S. by W.

Steaming to Barbadoes the same day, and back to St. Lucia 36 hours later, a current of 2½ knots or more NW. by N. was found by dead reckoning. At Barbadoes it is said that the stronger the trades the stronger the current to the northward and westward, and for some time before this occasion they had been blowing abnormally strong.

There seems to be a strong current at all times along the Tobago Island shore, but when its volume is small its force is not felt far to the northward. It will be noticed that the directions of these surface coast currents, continued in the same courses, will eventually impinge on the outside of St. Vincent and St. Lucia. If they were of great volume, the velocity of current in the St. Lucia

Passage would be very great. Instead of this, however, we find, with a fair surface current, an ebb and flow into and out of the Caribbean in the lower strata, but predominating outward below 100 fathoms.

An examination of the current curves of this passage shows that at—

Station 10.—The current was west (into the Caribbean), except at 130 fathoms, where it was tidal, flowing in and out.

Station 10[a].—The same.

Station 12.—Current flowing into the Caribbean with about the same velocity down to 30 fathoms, at 65 fathoms tidal, and at 130 fathoms flowing out.

Station 9.—Flowing into the Caribbean above 30 fathoms, and tidal action below that depth.

Station 10[b].—Flowing in the same direction above 65 fathoms, and tidal action at 130 fathoms.

An anchorage was made this year on the outside edge of the Grenadine Bank, and the current was found to be setting to the southward, varying between SW. and SE. In 1888, in the passage next to the southward, between Grenada and Trinidad, it was flowing out of the Caribbean in the deep water portions. This year it was found to be the reverse, except at 65 and 130 fathoms, where, as will be seen below, the current was tidal.

| Times. | 5.30 | 6.00 | 8.30 | 9.00 | 11.30 | 12.00 | 2.00 | 3.00 | 4.00 |
|---|---|---|---|---|---|---|---|---|---|
| 65 fathoms. | W. by S. | | W. by S. | | W. ½ S. | | NE. | | West |
| 130 fathoms. | | WSW. | | NNE. | | NE. | | West | |

Between Martinique and St. Lucia a surface current was found flowing in, but a sufficient outward flow at the lower depths to deflect the currents at 65 and 130 fathoms. Probably in this passage the current predominates to the eastward below 150 fathoms. It is probable that at times, the current leaving Tobago Island after unusually strong winds, may be of sufficient strength and volume to reach St. Lucia, and cause an inward flow in the passages on either side reaching the bottom, but ordinarily this will not be the case.

Between Curaçoa and the main-land three anchorages were made. At all of them a westerly surface flow and an easterly counter current was found, as will be seen in the table below.

| Station. | 3½ | 15 | 30 | 65 | 130 | 200 |
|---|---|---|---|---|---|---|
| No. 34. | NW. by N. | NW. | NW. ½ W. | SE. | SE. by E. | SE. by E. |
| No. 35. | WNW. ½ W. | NW. ¾ N. | SE. by E. ½ E. | SE. ¼ E. | SE. by E. | |

It is evident that in the southeastern Caribbean there is an eddy current setting to the eastward at the lower depths, and it reaches the surface at times.

The passage south of Grenada probably carries most of the volume of water escaping from the sea, and each of the near passages farther north assists, but with lessening amounts. The eddy, I think, will be strongest after strong trade-winds have been blowing for some time; for, under such circumstances, the coast portion of the equatorial flow will be large in volume and great in velocity from the escape of the water thrown to leeward, and as the direction of its escape is nearly at right angles to the "gentle fractional" part of the equatorial, the latter will be overcome and the eddy produced. A certain amount flows to the westward between Tobago and Trinidad, but the passage is narrow and shoal, and while the velocity is considerable the volume can not be large enough to cause any great current except on the banks. A strong westerly current is found in the "Serpent's Mouth," south of Trinidad, into the Gulf of Paria, and it is sufficient in volume to neutralize the flood tide in the Dragon's Mouth. Heavy tide rips are found about the latter, which are probably caused by these two currents meeting. The influence of the various forces

acting on the currents off Trinidad is shown in the table below. No. 6 is nearest the Dragon's Mouth, and in 65 fathoms water; No. 7, 85 fathoms, and No. 8 in 362 fathoms.

| Stations. | 3½ | 15 | 30 | 65 | 130 |
|---|---|---|---|---|---|
| 6 | N. by W. | N. by E. | NE. | | |
| 6 | | | SE. by E. | | |
| 7 | W. | NE. by E. | SW. | | |
| 7 | | WSW. | | | |
| 8 | NE. by E. | NE. by N. | ENE. | NE. by N. | NE. by N. |
| 8 | SE. by E. | SE. by S. | SE. by E. | E. by S. | ESE. |
| 8a | WSW. | SW. | SW. by W. | WSW. | W. by S. |
| 8a | | | | NE. | NE. by N. |

At No. 6, which was nearest the Gulf of Paria, when the tide was ebb the average current was N. by W. on the surface and N. by E. at 15 fathoms. At 30 fathoms, where the influence of the tide from the Gulf would be least felt, the direction at the beginning was NE. and changed to SE. by E. after low water. Probably on this bank the direction of the ebb and flood currents would be north and south, but the deflection of the eddy current coming from the Caribbean gave a resultant direction at 30 fathoms of NE. and SE.

The position of No. 7 anchorage was almost in the prolongation of the axis of the passage between Tobago and Trinidad. Its effect on the tidal action at this anchorage was to deflect to the westward.

No. 8 station, situated near the middle of the deep water of the passage, shows at all depths the influence of the eddy, deflecting the tidal currents between NE. and SE. To the northward of Martinique the next three passages possess currents much different from those to the southward. Here tidal action is noticeable, but only to deflect the entering water and not to reverse its direction. The vertical curves (illustration No. 36) show the difference in the character of the currents in the various passages, and seem to confirm the view that the causes of the currents entering those to the northward are different from those to the southward of that island, and the curves shown on illustrations 32 and 33 seem to point to the same fact. Comparing them with the curves of the South American coast current, or of the St. Lucia Passage, it will be seen how very different they are.

The South American curves show the surface current greater than at 15 fathoms. Between St. Lucia, St. Vincent, and Martinique the maximum velocity is at 15 fathoms, with but a single exception. These are the passages receiving nearly all of the South American coast current which succeeds in finding its way into the Caribbean.

In the passages between Martinique and Antigua the flow is composed of the gentle fractional equatorial and the escaping water banked up against their windward sides. The velocity of the current entering the passages is probably in excess of the current due to wind friction alone in the trade region outside the islands. Whatever the latter current may be, it would when it impinges on the islands raise the elevation of the surface and increase the velocity of the escaping water to the westward. The accumulation on the outside due to the break of the waves, throwing tons of water from the crest to the trough of the sea, would increase it still more. The elevations or differences of level would probably be extremely slight, but would be sufficient to increase the flow through the passages when there was no other escape for it.

The three passages next in order of their examination are the Anegada, Mona, and Windward, and in these only a tidal current was found, complicated by interfering local causes.

On the east side of the Anegada Passage, in 1888, the surface current varied between SW. and SE. by E.; 15 fathoms, NNE. to E. by S.; 30 fathoms, N. to E. by S.; 65 fathoms, N. to E. by S., and 130 fathoms, NW. to SE. by the NE. quadrant.

This year the directions above the 30-fathom depth changed regularly to the right, making the circle in about twelve hours. At 65 and 130 fathoms the directions were irregular, but mostly to the westward.

At Station No. 23, situated near the middle of the passage, a gentle current was found, tidal in character.

At No. 24, on the west side of the passage, it was the same. The following table gives the surface velocities and directions at this station for each year:

| 1888. | | | 1889. | | |
|---|---|---|---|---|---|
| Time. | Direction. | Velocity. | Time. | Direction. | Velocity. |
| 9.40 | S. by W. | 0.41 | 8.35 | SSE. | 1.13 |
| 11.10 | N. NE. | 0.63 | 11.00 | NE. by N. | .93 |
| 1.30 | NE by E. | 0.48 | 2.00 | E. ½ S. | .98 |
| 4.00 | NE by N. | 0.49 | 4.45 | E. by N. | .93 |
| 6.15 | SE by E. | 0.48 | 7.25 | ENE. | 1.00 |
| 8.30 | S. by W. | 0.50 | 10.00 | East | .54 |
| 10.40 | NNW. | 0.62 | | | |
| 1.40 | E. by N. | 0.64 | | | |

It is seen that in 1888 the velocities were very light, the change in direction was to the right, and in about twelve hours these changes made the tour of all points of the compass in succession. In 1889 the velocities are stronger, and the current was generally setting to the eastward against a fresh trade-wind.

In the Mona Passage five anchorages were made. On the east side, in 1888, the currents were light, and were mostly to the northward and westward. A year later they were found to be the same, except at 130 fathoms, when they varied in direction between NE. and S. by E., but stronger in force as in the Anegada.

Near the middle of the passage the currents were light, and to 30 fathoms depth generally varied between NE., SE., and SW.; below 30 fathoms the tidal influence was felt predominating toward the east. On the west side the currents were the same as in the middle.

In 1888 three anchorages were made in the Windward Passage; No. 27, about 6 miles west of St. Nicolas Mole; No. 29, about 16 miles SE. of Cape Maisi Light-House, and No. 28, outside the line drawn between them, but in the prolongation of the middle of the passage.

At Station 27 the directions were in the NE. and SE. quadrants (the former predominating decidedly), except at 130 fathoms, at which depth the current was found to be weak and irregular. A year later the same condition was found, except that the thickness of the regular northeasterly and southeasterly current was but 30 fathoms, and below that depth it was weak and irregular.

At Station 28 the set was NE. and NW., except at 130 fathoms, where for a short time it was WSW. In 1889 the current was less than one-half knot in velocity, and its direction was generally to the southward and westward, except at 130 and 200 fathoms, where it was northerly.

Station No. 29 was found to be setting to the southward at each depth except 200 fathoms. At 20ᵐ the surface was setting northwesterly, and at all other depths tidal action was found except at 65 fathoms, where from some cause the flow was southwesterly. These currents are shown on illustration No. 40, the curves being drawn by resolving the velocity and taking the component in the direction of the axis of the passage. The vertical curves deduced from these are shown on illustration No. 36, Fig. 5, together with those of the previous year.

The water entering the Caribbean on the westward side at the time of the latest observations, was entirely as a subcurrent between 20 and 120 fathoms depth, whereas in 1888 it was entering at all depths observed. On the east side, in 1888, more water left the sea than entered from the surface to 130 fathoms, whereas this year the northerly current existed only to 30 fathoms depth, but was hardly perceptible below that depth. There seems to be an eddy current in this passage as in the others, and generally it will be found that it is northerly on the Haytian side and southerly on the Cuban side. It is probable, too, that there is a slight excess of water entering the passage.

There is evidently a current setting to the westward outside the islands from the Anegada to the Windward passages. This is probably composed in part of the same gentle flow as that found

in the passages north of Martinique, but it is much augmented by the water driven to leeward by the sea. In meeting the obstruction of the islands, the direction is changed slightly, and when an opening is reached, an eddy current is formed, the strength of which depends largely upon the continuity of the land to the eastward.

At the Anegada Passage the few islands to the eastward act more as a sieve than as an accumulator of the water, and consequently its eddy is weak and irregular, and tidal action most pronounced.

In the Mona Passage the same condition is found, the accumulation of water on the northern shore of Puerto Rico being insufficient to produce a marked eddy.

The Windward Passage to leeward of the large island of Hayti is situated favorably for formation of an eddy, and here it was found. In 1888 it was decided; in 1889 it was not. The first was a season of strong trade; in the last the winds were abnormally light.

Farther to the westward the coast current encounters the narrow part of the old Bahama Channel, and the different conditions existing at the two examinations seem to be indicated directly by the observations in the Windward Passage.

The first examination of Station No. 30 developed the fact that the surface current which was running to the eastward was but a shallow one. At 65 fathoms depth the direction changed first one way and then the other at fairly regular intervals, and below that depth at 130 and 200 fathoms it was running to the westward with a velocity of from 1½ to 2 knots per hour. At the time of the examination this year, the first twenty-four hours showed a current exactly opposite; that is, flowing to the westward on the surface, to the eastward at the lower depths, and at 65 fathoms the average turning point. In the next twenty-four hours the whole mass of water was running to the northward and westward.

In the vertical curves of the Windward and Old Bahama Channels (illustration No. 36, Sketches 5 and 6) the data are obtained by resolving the velocities in the directions of the axis, so that they represent relatively the volume of water passing through. The differences in the two years' observations will be seen at a glance.

An analysis of the temperatures in these passages will be of interest.

1888.

| Station. | 3½ | 15 | 30 | 65 | 130 | 200 |
|---|---|---|---|---|---|---|
| Windward Passage, 27. | 75.94 | 75.22 | 74.87 | 71.67 | 61.94 | |
| Windward Passage, 28. | 74.88 | 74.05 | 72.90 | 70.20 | 61.30 | |
| Windward Passage, 29. | 74.80 | 73.45 | 72.25 | 69.78 | 61.89 | 57.63 |
| Old Bahama, 30. | 74.38 | 73.30 | 73.14 | 72.30 | 63.86 | 58.17 |

1889.

| | | | | | | |
|---|---|---|---|---|---|---|
| Windward Passage, 27ª. | 79.44 | 78.63 | 77.43 | 74.06 | 63.58 | 57.07 |
| Windward Passage, 28ª. | 78.00 | 77.75 | 76.75 | 72.75 | 65.50 | 60.00 |
| Windward Passage, 29ª. | 78.44 | 76.79 | 76.75 | 74.21 | 66.29 | 62.14 |
| Old Bahama, 30ª. | 75.90 | 75.44 | 75.09 | 74.34 | 65.47 | 62.53 |

We see here that in the first table, at No. 27 anchorage, on the east side of the passage, the temperature at each depth is warmer than at the corresponding depth at the other stations. This water was leaving the Caribbean.

At No. 29 station at each depth it is colder than at the other stations, with the exception of 130 fathoms. This water was entering the Caribbean from the northward. In the Old Bahama Channel the surface water, coming from the Gulf of Mexico, was about the same as the water entering the Windward Passage at Station 29, but the lower water was warmer than at any corresponding depth between Hayti and Cuba, while in 1889 the surface water at Station 30ª was colder and the lower strata warmer.

Outside the Bahama Islands, and east of the probable limit of the Gulf Stream, two anchor-

ages were made, No. 31, in latitude 27° 53′, longitude 76° 59′, and No. 44, in latitude 30° 56′, longitude 76° 16′. At both, the flow is a continuation of that found in the trade-wind region, and is not from the Straits of Florida. At the second station, observations were carried to a depth of 600 fathoms. Below 200 fathoms the prevailing current was in the same direction as the surface; but at times changes were observed which seemed as if tidal action or a lower counter current overcame the regular set. The average directions, velocities, and number of observations at the two stations are given in the table below. The length of time required to take a series of observations from the surface to 600 fathoms necessitated an abandonment of the examination at most of the upper depths.

| Station. | No. | 3½ | Vel. | No. | 15 | Vel. | No. | 30 | Vel. | No. | 65 | Vel. |
|---|---|---|---|---|---|---|---|---|---|---|---|---|
| 31 | 9 | NW. by W. | .86 | 9 | NW. by W. | 1.07 | 9 | NW. by W. | .98 | 9 | NW. | .88 |
| 44 | 2 | NNE. | 1.06 | 1 | NE. by N. | 1.15 | 2 | NE. by N. | 1.14 | 1 | NNE. | 1.13 |
| **Station.** | **No.** | **130** | **Vel.** | **No.** | **200** | **Vel.** | **No.** | **375** | **Vel.** | **No.** | **600** | **Vel.** |
| 31 | 9 | NW. by N. | .70 | 9 | NW. by N. | .65 | | | | | | |
| 44 | 7 | NE. ½ N. | .90 | 7 | NE. by E. | .92 | 5 | NE. by E. | .82 | 6 | NE. | .60 |
| 44 | | | | | | | 2 | SW. ½ S. | .75 | 1 | SSE. | .54 |

It will be noticed that at Station 31 all the water was flowing to the northward and westward, but the lower strata more to the northward (toward the right) than the upper. At Station 44, about 180 miles distant, the directions were found to be mostly in the northeast quadrant, with the lower strata setting more to the right than the upper.

Off Cape Hatteras two anchorages were made in 1887, and seven the present year. The various stations are shown on the accompanying chart (illustration No. 42), and it will be seen that all are well within the supposed limits of the Gulf Stream.

At Station No. 1, Section F, observations were made three times (see illustration). The first, in 1887, shows a strong current to the northward and eastward, except at the lower depths where it was tidal. At 200 fathoms it averaged NNW. ½ W. and SSE. ½ E., changing with regularity, but running longer to the southward than to the northward. At 130 fathoms there was an evident interference between the regular and the tidal currents.

At Station 1[a] practically the same directions were found, with an indication of the tidal interference at 130 fathoms.

Station 1[b] gave an eddy current during the whole time of the anchorage, every direction with one exception at 65 fathoms being in the southwest quadrant.

At Nos. 2 and 3 stations the currents were always to the northward and eastward, and the velocities strong.

At Nos. 4, 5, and 6 stations the currents were most erratic in the upper strata, but persistently flowing to the northward and eastward at the lower depths. There were some anomalous temperatures found that lead me to the belief that inferences drawn as to direction of flow of water from surface temperatures can not be relied upon.

At Station 5 the directions of the surface flow changed gradually from W. to NE. by E. and SSE., with greatly varying temperatures, as shown in the following table:

*3½ fathoms, Station 5, Section F.*

| Time (h. m.). | 1.45 | 5.22 | 11.50 | | 6.10 | 7.30 | 9.45 | 1.07 | 4.20 | 7.24 |
|---|---|---|---|---|---|---|---|---|---|---|
| Temperature. | 76°.5 | | 73°.5 | | 72° | 74° | 76°.5 | 78°.5 | 79°. | 78°. |
| Direction. | West | NW. by W. | N. by W. | North | NNE. | NE. by E. | SE. | SSE. | SSE. | SSE. |
| Velocity. | .94 | .98 | .96 | .91 | .76 | .63 | 1.05 | 1.21 | .97 | .98 |

The current when flowing N. by W. and NNE. was colder than when flowing either W. or SSE. by many degrees.

At Station 1 great differences were observed also in 1887; the surface directions were all in the northeast quadrant, with an average temperature of 77°.3.

At 1[a] the directions were the same and the temperature 75°.1.

At 1[b] the average surface flow was SW. with a temperature of 80°.6. At 130 fathoms, however, the directions and temperatures followed each other more closely, No. 1[a] having the most persistent northeasterly current, and the highest temperature 53°.1; No. 1 NE. and SE. with 51°.7, and No 1[b] SW. with 49°.6.

The table below shows the temperatures at the various stations, and the number of observations, and also the general course of the currents off Cape Hatteras.

| Station. | 3½ | | | 15 | | | 30 | | |
|---|---|---|---|---|---|---|---|---|---|
| | Temp. | No. | Direc. | Temp. | No. | Direc. | Temp. | No. | Direc. |
| | ° | | | ° | | | ° | | |
| No. 1 (1887). | 77.3 | 58 | NE. | 75.6 | 5 | NE. | 72.4 | 4 | NE. |
| No. 1[a] (1889). | 75.1 | 8 | NE. | 74.4 | 8 | NE. | 72.1 | 8 | NE. |
| No. 1[b] (1889). | 80.2 | 8 | SW. | 76.2 | 8 | SW. | 69.1 | 8 | SW. |
| No. 2 (1889). | 79.8 | 3 | NE. | 79.5 | 4 | NE. | 79.0 | 3 | NE. |
| No. 3 (1887). | 78.6 | 9 | NE. | ------ | 4 | NE. | ------ | 4 | NE. |
| No. 3[a] (1889). | 77.9 | 10 | E. | 75.8 | 8 | NE. | 74.4 | 9 | NE. |
| No. 4 (1889). | 74.7 | 8 | NE. SE. | 73.6 | 8 | NE. | 71.6 | 8 | NE. SE. |
| No. 5 (1889). | 74.8 | 11 | NW. NE. SE. | 73.2 | 10 | NW. NE. SE. | 71.4 | 8 | NW. NE. SE. |
| No. 6 (1889). | 77.5 | 8 | W. | 76.7 | 8 | W. | 74.8 | 8 | W. |

| Station. | 65 | | | 130 | | | 200 | | |
|---|---|---|---|---|---|---|---|---|---|
| | Temp. | No. | Direc. | Temp. | No. | Direc. | Temp. | No. | Direc. |
| | ° | | | ° | | | ° | | |
| No. 1 (1887). | 59.4 | 5 | ENE. | 51.7 | 3 | N. E. | 46.5 | 8 | N. NW. S. SE. |
| No. 1[a] (1889). | 64.7 | 8 | NE. | 53.1 | 8 | NE. | | | |
| No. 1[b] (1889). | 58.1 | 8 | SW. | 49.6 | 8 | SW. | 44.7 | 8 | SW. |
| No. 2 (1889). | 73.2 | 3 | NE. | | | | | | |
| No. 3 (1887). | ------ | 4 | N. | | | | | | |
| No. 3[a] (1889). | 70.9 | 8 | E. | 64.5 | 8 | NE. | 62.6 | 8 | |
| No. 4 (1889). | 67.8 | 7 | NE. SE. | 64.1 | 7 | NE. E. | 63.5 | 2 | E. |
| No. 5 (1889). | 70.8 | 9 | NE. | 65.1 | 9 | NE. | 61.1 | 9 | NE. |
| No. 6 (1889). | 70.8 | 8 | N. | 64.5 | 8 | NE. | 62.2 | 8 | NE. |

The daily variations in the South American coast current, and in the passages receiving its waters (the St. Lucia and Martinique Passages), are very marked.

The following table shows the approximate time of the arrival of the maximum current, *after* the transit of the moon:

| | h. | m. |
|---|---|---|
| Equatorial stream between Tobago and Barbadoes | 5 | 56 |
| South of St. Lucia | 6 | 05 |
| South of Martinique | 6 | 49 |
| Outside the Bahamas | 11 | 30 |

The question arises, what is the cause of this daily variation in the velocity? It is not marked in open sea where the current or tidal wave is unobstructed, but when it is noticed, the close agreement between the current establishment and the tidal establishment causes the belief that they are intimately connected. It appears that the current has a comparatively uniform velocity. The tidal wave, upon meeting an obstruction in open sea, elevates the water and causes a varying velocity in the current, but the effect is retarded in point of time depending upon outside influences.

For example:

| | Tobago. | St. Lucia. | Martinique. |
|---|---|---|---|
| | h. m. | h. m. | h. m. |
| Tidal establishment. | 3 00 | 4 08 | |
| Maximum current. | 5 56 | 6 05 | 6 49 |

That is, the maximum velocity is from two to three hours after the water is elevated greatest by the tidal wave.

Off Bahama the maximum flow is $11^h\ 30^m$ after the transit. The average tidal establishment of the Atlantic coast south of Hatteras is about $7^h\ 30^m$, resulting in a difference of 4 hours after the tidal elevation on the coast. In the confined waters of the Gulf Stream, issuing from the Gulf of Mexico, it is still a question of "head," but in another way, for here the maximum flow is after the depression of low water in the Atlantic.

The maximum current in the Straits of Florida at Fowey Rocks is 9 hours before the transit of the moon or $3^h\ 26^m$ after.

Low water in the Atlantic is at about $1^h\ 17^m$, leaving a difference of $2^h\ 07^m$. In the Straits of Yucatan the same law seems to hold, but the irregular and conflicting tidal waves of the Gulf of Mexico cause a greater retardation to about 5 hours after low water. This subject will receive further attention on later examinations, when it is hoped that the question may be definitely settled.

To summarize my conclusions as to the probable course taken by the water entering the Caribbean to form the Gulf Stream:

Outside the Windward Islands the surface flow is in the prevailing direction of the trade-winds; this is probably a persistent current as a whole, but is interrupted over small areas by the lower currents coming to the surface, and also by the South American coast current increasing in velocity and volume at the time of abnormally strong trade-winds. The observations show the currents to be as follows in the various passages from Cuba to Antigua:

*Grenada Passage.*—Variable on the surface; subcurrent from the Caribbean into the Atlantic.

*St. Lucia Passage.*—Surface into the Caribbean; subcurrent out with a tidal current between.

*Martinique Passage.*—Surface current into the Caribbean; tidal current below but predominating to the westward.

*Dominica, Guadaloupe, and Antigua Passages.*—A gentle westerly current into the Caribbean.

*Anegada and Mona Passages.*—Irregular and weak tidal currents, with probably a slightly predominating current out of the Caribbean on the eastern sides, and into the Caribbean on the western sides of the passages.

*Windward Passage.*—The same as in the Anegada and Mona Passages, but the currents more decided in velocity, depending probably upon the prevailing strength of wind.

*South of Curaçoa.*—Generally to the westward on the surface, and to the eastward underneath, but the subcurrent is of such volume that it is liable to entirely overcome the surface set.

*Between Jamaica and Honduras.*—Southwest of Pedro Bank, SW. by W. on the surface, gradually changing to the westward to 130 fathoms, and tidal below that depth.

*Between Pedro Bank and Jamaica.*—Tidal or eddy current setting to eastward.

*Old Bahama Channel.*—Current in both directions, depending upon the velocity, direction, and persistency of the prevailing winds.

*In general.*—The trade-wind seems to cause a surface current in its direction, and in all the passages of the Windward Islands an inflow exists to a greater or less extent. In the passages on the northern side of the Caribbean there is no fixed current. In addition to this flow there is a large volume entering all the passages, from the break of the waves.

Passing across the Caribbean, the obstruction of Honduras and Yucatan causes an elevation (probably very slight, however) and a flow through the natural outlet of the Straits of Yucatan and Straits of Florida, thus forming the Gulf Stream proper.

The course of the currents between the Bahama Islands and Cape Hatteras indicates that the Gulf Stream receives large additions from the Atlantic flow. The complications off Cape Hatteras, caused by this current, and the inshore counter current meeting the Gulf Stream at an angle, makes it impossible, however, to solve the problem of the mysteries of the latter at the present time. The position of its axis seems to be fairly well located in the vicinity of No. 3 anchorage, but from all the evidence of mariners a strong current is often experienced farther south; sometimes it is broad and sometimes narrow. There seems to be a subcurrent generally setting in the proper direction of the Stream, even when the surface flow is opposite; it is probable that the former overcomes the latter, making a surface current to the northward; that is, the increase in width of surface flow comes from below, but the cause or the time of these expansions can not now be stated. The connection between the expansion and the declination or transit of the moon, or meteorological condition of the atmosphere, is not evident, although there are indications that these are the forces which influence if not govern it. Many more observations are necessary to determine the question.

The following officers were attached to the vessel during the past season: Ensign R. M. Hughes, U. S. N., observer; Ensign Harry Kimmel, U. S. N., observer; Ensign C. S. Stanworth, U. S. N., observer; Ensign J. E. Shindel, U. S. N., observer; Ensign Philip Andrews, U. S. N., observer; Assistant Surgeon Thomas Owens, U. S. N., recorder; Assistant Engineer W. W. White, U. S. N., recorder; Pay Yeoman N. G. Henry, U. S. N., recorder; Ship's Writer, Wm. H. de Luce, recorder.

*Statistics.*

| | |
|---|---|
| Number of anchorages for observing currents | 39 |
| Number of observations for current | 2,577 |
| Number of observations of temperature of sea water | 2,535 |
| Number of miles steamed during the six months ending July 1, 1889 | 11,850 |

Respectfully,

J. E. PILLSBURY,
*Lieutenant, U. S. N., Commanding,*
*Assistant, Coast and Geodetic Survey.*

Mr. T. C. MENDENHALL,
*Superintendent Coast and Geodetic Survey,*
*Washington, D. C.*

Blank page retained for pagination

# APPENDIX NO. 17.—1889.

## REPORT ON THE RESULTING LENGTH AND PROBABLE UNCERTAINTY OF FIVE PRINCIPAL BASE-LINES, MEASURED WITH THE COMPENSATION BASE APPARATUS, BACHE-WÜRDEMANN, OF THE COAST SURVEY, BETWEEN THE YEARS 1847 AND 1855, INCLUSIVE.*

Submitted by CHARLES A. SCHOTT, Assistant, Coast and Geodetic Survey.

Of the seven principal base-lines, measured up to the present time with the Bache-Würdemann Compensation Base Apparatus, an account of two only has been published, viz: Length and accuracy of the Epping base-line, Maine, in Appendix No. 21, Annual Report for 1865, and measurement of a primary base-line on Peach Tree Ridge, near Atlanta, Ga., in Appendix No. 12, Annual Report for 1873. For the sake of completeness of information respecting the results obtained with this apparatus, it appeared desirable to present an account and give the resulting lengths with probable errors of the remaining five principal base-lines, which were reported on individually by me some time between December, 1871, and September, 1872.

These lines are as follows:

1. Base-line on Dauphine Island, Ala., measured in 1847.
2. Base-line on Bodies Island, N. C., measured in 1848.
3. Base-line on Edisto Island, S. C., measured in 1850.
4. Base-line on Key Biscayne, Fla., measured in 1855.
5. Base-line on Cape Sable, Fla., measured in 1855.

The sixth and seventh lines in the order of time were the Epping Plains base in 1857, and the Peach Tree Ridge base in 1872 and 1873.

With this last measure the first part of the history of this compensation apparatus closes, as it has not been employed since 1873. Between the years 1847 and 1873 the 6-metre bars (tubes) remained substantially as originally constructed and adjusted, excepting a small change in length of one of the tubes, due to an accident to the agate end during the first measure made in 1855. The treatment and principles of computation for the length of these seven bases and for their probable error are therefore the same or similar, in particular since all depend upon the same original comparisons and fundamental data.

After the measure of the last base some slight improvements and re-adjustments of the tubes were made at the Survey Office at Washington, which of course would now necessitate a series of new comparisons with the 6-metre standard bar, in case it was the intention to use the apparatus

* This report is now published by direction of the Superintendent, and without any other comment than to state that it was desirable to give the information it contains to the public as a part of the history of the base measures of the Survey, and as the foundation of distances for a number of triangulations based upon these measures. It was originally made in 1874 to the (then) Assistant in charge of the Office, and was intended for insertion in the Superintendent's Annual Report for that year.—[June, 1890, C. A. S.]

again.* A full description of it, accompanied by a plate of illustrations, is given in Appendix No. 35, Coast Survey Report for 1854. This account is from the pen of Maj. E. B. Hunt, U. S. A., then Assistant in the Coast Survey. This report having become scarce, the article was reprinted in Appendix No. 12, Report for 1873, pp. 132–136, with a supplement referring to some improvements made in 1874. The illustrations are reproduced on plate 18 (with the added Borda scale of figure 3).

The unit of length adopted in the Coast Survey, since its existence, is one of the original iron metres of the French committee of the last century, the property of the American Philosophical Society, of Philadelphia, and lent to the Survey. In 1867 it was taken to Paris by Dr. F. A. P. Barnard, then Assistant in the Survey, and by him compared with the metre of the Archives, with the co-operation of Mr. Tresca, of the Conservatoire des Arts et Metiers (see Coast Survey Report for 1867, Appendix No. 7). Later indirect comparisons have shown that this metre (C. M.) is very nearly (most probably less than a micron) of the length of the new International Prototype Metre (see Bulletin No. 17, Coast and Geodetic Survey.—The relation between the Metric Standards of Length of the U. S. Coast and Geodetic Survey and the U. S. Lake Survey, published October 11, 1889). The National Prototype Metre having since been received, it now only remains to compare the Committee Metre (C. M.) with it in order to make any small correction in cases where the greatest precision is demanded.

For determining the length of the tubes and for adjusting the compensation of the base apparatus an iron standard bar was provided (in 1847), and its length in terms of the C. M. was found to equal 5.9999497 metres at 0° C. from comparisons made in 1860 by Assistant J. E. Hilgard, but
$\pm$ 9
5.9999583 from comparisons in 1877 by H. W. Blair of the Survey, and 5.9999547 as revised by me
$\pm$ 7 $\pm$ 25
in March, 1883.
The co-efficient of expansion of the bar was determined in 1860 by Assistant Hilgard, and was found to be 0.00000641 for Fahrenheit's scale, or 0.00001154 for the centigrade scale. (See Appen-
$\pm$ 2 $\pm$ 4
dix No. 26, Report for 1862.)

The co-efficient of expansion of the C. M. is discussed and stated in Bulletin No. 17, p. 172, viz: $11.795 \times 10^{-6}$ for the centigrade scale.
$\pm$ 25

* The drawbacks to the advantageous use of this apparatus (length 6 metres), as now recognized, are twofold: First, the cumbersome and expensive character of its manipulation, and demand for a careful grading of the line; second, the complexity of the lever arrangement and of the bimetallic compensation rendering the apparatus liable to changes in length during service in the field, through the effect of difference of temperature in the bars. The experience of the U. S. Lake Survey, which had secured a copy of the apparatus (length only about 4½ metres, by the same maker; see description in the Report for 1868), was similar to that of the Coast Survey, and led ultimately to its abandonment in favor of a steel bar with attachment (in its middle) of a zinc bar to serve as a Borda thermometer. On the Coast Survey, on the other hand, an apparatus was brought out using a rigid bimetallic invariable bar (length 5 metres), (see description in Appendices Nos. 7 and 8, Report for 1882; also length of the Yolo base, California, in Appendix No. 11, Report for 1883). It is not too much to say that greater accuracy may be reached with a plain bar (steel) than by means of any mechanical combinations; the modern tendency appears to be in favor of the most simple means. The great progress made of late in refined thermometry aids materially in reaching this greater precision.

## PART I.—RESULTING LENGTH AND PROBABLE UNCERTAINTY OF THE BASE-LINE MEASURED ON DAUPHINE ISLAND, ALABAMA., IN 1847, BY A. D. BACHE, SUPERINTENDENT U. S. COAST SURVEY.

[Reported April 9, 1872.]

When reconnoitering for the primary triangulation of the coast of Alabama and Mississippi in 1845, Assistant F. H. Gerdes selected the site on Dauphine Island as a suitable one for the measure of a base-line. The elevation of the island is but a few feet above the mean level of the Gulf of Mexico. The line passes over sand, generally bare, but in part covered with low grass or rushes. The irregularities of the ground are inconsiderable, but a number of sand ridges had to be leveled and some gullies, cut out by the sea, had to be crossed.

After a preliminary chaining in 1845–'46, the measurement was made by means of the compensation base apparatus in May and June, 1847, by A. D. Bache, Superintendent. This is the first base-line measured with this apparatus.

The line is nearly 6⅔ statute miles in length; its termini are marked by stone monuments, between which there are six so-called mile-stones, also a stone half a mile beyond the sixth mile-mark. In August, 1852, a hurricane swept over the island, causing the sea to wash over the line and to disturb the mile-stones V and VI, also VI½, as well as the western monument; two of the original verification marks (nails in heavy logs), however, were recognized in May, 1854, by Assistants F. H. Gerdes and J. E. Hilgard and secured by marble blocks, and for further security Assistant Gerdes, in 1857, inserted a screw pile in the line with reference to these marks.

The compensating tubes Nos. 1 and 2 were compared among themselves, and tube 2 directly with the standard 6-metre bar before the apparatus left Washington. On Dauphine Island, before and after the base measures, the relative length of the tubes was ascertained; tube 2 was compared with the standard before the base measure and tube 1 was similarly compared after the measure. The results of these comparisons are as follows:

By direct comparisons of the tubes, No. 1 was found longer than No. 2—

| | Metres. |
|---|---|
| At Washington, in March, 1847 | 0.00001825 |
| At Dauphine Island, in May, 1847 | 0.00002180 |
| At Dauphine Island, in June, 1847 | 0.00002147 |

Before the comparisons at Dauphine Island were made, a re-adjustment of one of the iron stems carrying the knife-edge became necessary; the mean of the results obtained in May and June for tube 1 longer than 2, $0^m.00002157 \pm 0\ .00000140$ was therefore preferred to the mean of the three values.

For the same reason the results of the Dauphine Island comparisons of the tubes with the standard alone are used; they are: May 11 and 12, 1847, before the base measure, tube 2 = $6^m.0000573 \pm 0^m.0000110$, and June 10, 1847, after the base measure, tube 1 = $6^m.0000640 \pm 0^m.0000110$. The above difference in the length of the tubes is well ascertained, but the derived absolute length of the tubes depends mainly on the closeness with which the temperature of the standard bar is indicated by the thermometers during the comparisons. During the first-named comparisons, made at an average temperature of 74°.53 Fahr., the temperature of the air was probably slightly rising; during the second comparisons, made at an average temperature of 76°.93 Fahr., the temperature of the air was probably slightly falling, and if in the first case the substance of the bar was but ¼° Fahr. lower, and in the second case, by the same amount higher than indicated, the resulting change in length would more than make up the observed difference. Equating the measures with consideration of weights, we finally have:

| | |
|---|---|
| Length of tube 1 | $6^m.0000710 \pm 0^m.0000110$ |
| Length of tube 2 | $6\ .0000503 \pm 0\ .0000110$ |

The adjustment of the compensation for changes of temperature was made in 1846 by the late Superintendent, and the tubes are still in the same condition as at first made. This compensation was then shown to be perfect for various natural temperatures and for different rates of change of temperature by the invariable length of the tubes under these conditions. This process

required but an approximate knowledge of the co-efficients of the two metals composing each tube. In 1865, when the final result for the length of the Epping base was presented, the former conclusion of the absence of any appreciable differential expansion and contraction in the tubes under variable temperatures was again accepted, and the same idea was presented in the discussion of the length of the Bodies Island base. It suffices to remark that the perfect compensation of the tubes for changes of temperature can not be called in question by any comparisons conducted in the field with bar and thermometers but partly protected from the variations in the temperature of the air, and that the apparent outstanding differential quantities, under such circumstances, are to be ascribed to the difference in the actual and attributed temperature of the metal of the bar. The treatment of the measures for the length of the base will be uniform for each of the six lines so far measured with the compensation apparatus. The absolute length of the tubes, however, is not invariable, as may be seen by a comparison of the results given for the several base-lines; but as the length of the latter is not affected thereby the fact is of little importance. This shortening of the tubes is ascribed to the joint effect of a gradual wearing of movable parts and to sagging or settling.

The probable error assigned to the deduced length of the tubes may be taken to include all uncertainty arising from direct comparisons with the standard, the uncertainty in the length of the standard itself, and all uncertainty respecting imperfect indications by the thermometers during the comparisons, but excluding any small effect from a supposed imperfection in the compensation of the apparatus.

To estimate this last we know that the average temperature of the tubes during the measurement of the base, as indicated by the three thermometers attached to each tube and read for each contact, is 85°.9 Fahr., and the mean temperature during the comparisons with the standard is 75°.7 Fahr. Owing to this difference of 10.°2 Fahr., the probable error of the length of each of the tubes, as given before, has been increased to $\pm 0^{m}.0000146$

The greater number of tubes was placed level, or nearly so, during the measure, and the maximum inclination but little exceeds 1°.

The general surface of the island is but 2 or 3 feet above the average tidal level of the Sound; the latitude of the middle of the base is 30° 15′, and the azimuth of the line S. $84\frac{1}{4}$° W., and the elevation of the tubes above the average Gulf level 1.83 metres, making the reduction to that level $= -0^{m}.00306$

The excess of length of the end of tube 1777 over the west end of the base was measured with a brass metre scale, and allowance was made for effect of the actual temperature above that for which it was standarded. The length of the base becomes, consequently:

| | Metres. |
|---|---|
| 1776 tubes of mean length | 10656 + 0. 1076 |
| One tube No. 1 | 6 + 0. 0001 |
| Correction for inclination of tubes | — 0. 0958 |
| Correction to reduce to mean of double measure of 97 tubes | + 0. 0001 |
| Excess of 1777 tubes at west end | — 0. 1713 |
| Reduction to half-tide level of Gulf | — 0. 0031 |
| | 10662 — 0. 1624 |
| Resulting length of base | 10661. 8376 |

We have also the following resulting distances of the mile-stones and verification marks from the east end of the base:

| | Metres. |
|---|---|
| To first mile-stone | 1608. 0156 |
| To second mile-stone | 3216. 0325 |
| To third mile-stone | 4824. 0482 |
| To fourth mile-stone | 6432. 0639 |
| To fifth mile-stone | 8040. 0798 |
| To west end of tube 1532 | 9192. 0081 |
| To sixth mile-stone | 9648. 0959 |
| To west end of tube 1658 | 9948. 0058 |
| To sixth and a half mile-stone | 10452. 1037 |

The hurricane of of August, 1852, having displaced mile-stones V, VI, and VI½, as well as the western monument at end of base, that portion of the old line lying between the verification marks (east end of tubes 1533 and 1659) was remeasured in May, 1855, by Assistants F. H. Gerdes and J. E. Hilgard by means of the subsidiary apparatus of contact iron rods Nos. 1 and 2, each 4 metres in length. (For a description of this apparatus see Coast Survey Report for 1856, Appendix No. 60.) The rods were directly compared with the double metre standards known as A and B; the resulting length is: Rod No. 1, $3^{m}.9999377$, and Rod No. 2, $3^{m}.9999098$, at the temperature of melting ice.

The length remeasured is as follows:

| | Metres. |
|---|---|
| 188 rods of mean length at 87°.21 Fahr | 752.2518 |
| 1 rod, No. 1, at 94° Fahr | 4.0015 |
| Excess of last rod over line | — 0.2600 |
| Reduction to sea-level | — 0.0002 |
| Resulting length | 755.9931 |
| Original length as measured by means of the compensation apparatus | 755.9977 |

Difference of the two measures, $0^{m}.0046$ (equal to 0.18 inch), or $\frac{1}{164000}$ of the whole length, nearly, by which amount the measure by subsidiary apparatus differs from that by the standard apparatus.

Based upon the measure of 1855, Assistant Gerdes, in 1857, inserted a screw pile in the line at a distance of $9942^{m}.7984$ from the east end of the base, its distance east of the east end of tube 1659 being $5^{m}.2074$

The probable error of the assigned length of the base arising from the uncertainty in the length of a tube is 1777 times $\pm 0^{m}.0000146 = \pm 0^{m}.02594$

The probable errors due to contact and transfer errors during the measurement, which occupied seventeen working days, are $\pm 0^{mm}.010\sqrt{1776} = \pm 0.^{m}00042$ and $\pm 0^{mm}.082\sqrt{68} = \pm 0^{m}.00068$, respectively. These last errors are vanishing when compared with the principal source of error. (An account of the experiments and results for contact and transfer errors is given in the record and discussion of the measures on Bodies Island in 1848.) The probable error of the base is, consequently,

$$\sqrt{(0.02594)^2 + (0.00080)^2} = \pm 0^{m}.02595$$

An uncertainty of $\pm 0^{m}.0260$ (or nearly of 1 inch) equals $\frac{1}{410000}$, nearly, of the length of the base, and the corresponding uncertainty in the logarithm of this length is $\pm 0.0000010571$

We have, consequently, the final value for the measured length of the Dauphine Island base

$$10661.8376 \pm 0.0260 \text{ metres}$$

and its logarithm

$$\begin{array}{r} 4.0278320635 \\ \pm \quad 10571 \end{array}$$

---

## PART II.—RESULTING LENGTH AND PROBABLE UNCERTAINTY OF THE BASE-LINE MEASURED ON BODIES ISLAND, NORTH CAROLINA, IN 1848, BY A. D. BACHE, SUPERINTENDENT U. S. COAST SURVEY.

[Reported December 26, 1871.]

The site for the base-line was selected by Assistant C. O. Boutelle, in March, 1848. It is located on, and extends over, the sandy and in part marshy beach of the low and narrow strip of land on the coast of North Carolina, between Roanoke Sound and the Atlantic Ocean. Its middle point is nearly opposite the north end of a base-site selected in 1845, the measurement of which, however, was prevented by the sea breaking through it in September, 1846.

After a preliminary measure by chaining, the final measurement, by means of the compensation base apparatus, was made between November 7 and 23, by A. D. Bache, Superintendent. The Bodies Island base is the second primary base measured with this apparatus. The whole

length of the line is nearly 6¾ statute miles, and its termini are marked by stone monuments; there are also 6 mile-stones placed in the line, which are used for purposes of a subordinate; triangulation.

The compensating tubes Nos. 1 and 2 were compared with the 6 metre iron standard bar before the apparatus left Washington, and again before, during, and after the base measure at Bodies Island. The result of the comparisons taken on the island between November 3 and November 27, omitting those taken November 28 and 29, when the temperature was comparatively low, depends on twenty-one separate measures on four days, on each of which the temperature was very nearly uniform during the time occupied by the experiments; the mean temperature is but 0°.2 higher than the temperature at which the base was measured, and which was indicated by six thermometers attached to the tubes. The mean temperature on the days of comparison ranged from 40°.8 to 62°.3 Fahr., the average being 53°.0 Fahr.; on two of these days the temperature (during the comparisons) remained sensibly uniform; on the first day it was slowly falling, and on the fourth slowly rising. The temperature during the base-measure was 52°.3 Fahr., when corrected for difference in exposure and scale errors with reference to the indications of the thermometers of the standard bar.

One turn of the screw of the reflecting comparator was found equal to 56.333 divisions, and one division equal to 0.000004509 metre. From the above-mentioned field comparisons we deduce the following length for each of the compensation tubes:

Tube No. 1.....$5^m.9999514 \pm 0^m.0000140$
Tube No. 2.....5 .9997852 ± 0 .0000142

After a special investigation of the Bodies Island comparisons the result was again accepted that the compensation of the tubes for variation in temperature, whether slow or fast, was so nearly perfect that any supposed small deficiency or differential expansión and contraction could not be detected with certainty from these comparisons; they again proved the unreliability in the indications of the thermometers, when read in the air, though in contact with the metallic bars. It will be noticed that, as far as the length of the base is concerned, it matters little whether the tubes are or are not *perfectly* compensated, the length assigned to the tubes being that derived from the comparisons with the standard at a temperature almost identical with that during the measurement. The observations for compensation were made at the Coast Survey Office by the late Superintendent in 1846; during these experiments the compensating bars were immersed in a liquid, and when finally adjusted showed no change in length with variations in the temperature of the liquid. They have since remained in the same condition of mechanical adjustment.

The probable error assigned to the value for the length of the tubes may be taken to include all uncertainty arising from direct comparisons with the standard, the uncertainty in the length of the standard itself (on account of its smallness), and all uncertainty respecting imperfect indications by the thermometers of the actual temperature of the bars during comparison, also any small defect arising from imperfect compensation of the tubes.

The correction for inclination of tubes during the measure is very small, the larger of the sand hills, found in the line, having been reduced to an easy grade.

It was ascertained by means of a leveling operation and from tidal observations that the average elevation of the surface along the line was 1.265 metres above the half-tide level of the ocean, and allowing for height of apparatus above ground, a reduction for effect of 2.347 metres has to be applied to the measured length. The latitude of the middle of the base is 35° 51′, and its azimuth N. 23½° W.

The length of the base becomes, consequently:

| | Metres. |
|---|---|
| 1506 tubes of mean length | 10836 — 0.2378 |
| 1 tube, No. 1 | 6 — 0.0001 |
| Correction for inclination of tubes | — 0.0327 |
| Reduction to half-tide level of ocean | — 0.0040 |
| | 10842 — 0.2746 |
| Resulting length of base | 10841.7254 |

We have also the following resulting distances of the mile-stones from the north end of the base:

| | Metres. |
|---|---|
| To first stone | 1607.964 |
| To second stone | 3215.928 |
| To third stone | 4823.892 |
| To fourth stone | 6431.856 |
| To fifth stone | 8039.821 |
| To sixth stone | 9647.785 |

The probable error of the assigned length of the base arising from the probable error in the assigned length of the mean tube, is 1807 times $\pm 0^{m}.0000141 = \pm 0^{m}.0255$ The probable error arising from the measuring operation proper was found from special experiments made on November 25,1848, when a line of twenty-one tubes was measured five times on nearly level ground, partly over hard sand, partly over soft marsh. Each of the measures was marked on the ground at the forward end of the tubes 15, 16, 20, and 21. The errors of measure are principally of two kinds, which may be distinguished by the names "errors of *transfer*" and "errors of *contact*." The former arise from the operation of a transfer of the vertical at the end of a tube to the ground or from the reverse operation, as performed by means of a theodolite mounted near and at right angles to the line. The latter arise from the instability of the tubes, produced by any yielding of the ground, by its elasticity, or by the effect of the wind; this error is much enlarged when the tubes are inclined, in which case their weight acts as a disturbing cause. From these experiments we deduce the probable error of a transfer, $\varepsilon_t = \pm 0^{mm}.082$, and the probable error of a contact, $\varepsilon_c = \pm 0^{mm}.010$

On each of the ten days of measurements for the base there were four transfers, or forty in all, which produce an uncertainty in the length of the base of $\pm 0^{mm}.082\sqrt{40} = \pm 0^{mm}.519$; the 1,806 contacts produce $\pm 0^{mm}.010\sqrt{1806} = \pm 0^{mm}.425$; their combined effect, or the probable error of measure, is consequently $\pm 0^{mm}.671$ If we combine this with the former probable error arising from the uncertainty in the assigned length of the apparatus, we find the error of measure to be vanishing, and the whole uncertainty in the base becomes $\pm 0^{m}.0255$, or 1 inch nearly; it is equal to $\frac{1}{425500}$ of the length; the corresponding value in the logarithm of the length is $\pm 0.0000010215$.

We have, consequently, the final value for the measured length of the Bodies Island base-line

$$10841.7254 \pm 0.0255 \text{ metres}$$

and its logarithm

$$\begin{array}{l} 4.0350984032 \\ \pm \quad 10215 \end{array}$$

---

## PART III.—RESULTING LENGTH AND PROBABLE UNCERTAINTY OF THE BASE-LINE MEASURED ON EDISTO ISLAND, SOUTH CAROLINA, IN 1850, BY A. D. BACHE, SUPERINTENDENT U. S. COAST SURVEY.

Reported August 15, 1872.

In May, 1847, Assistant James S. Williams, who had been charged with the examination of the coast of Georgia and South Carolina for the location of a base-line, reported the site on Edisto Island, South Carolina, as possessing the necessary requirements for a satisfactory measure. The line was subsequently inspected by the Superintendent of the Survey, and was directed to be opened and prepared for measurement. It is located on the southeast side of the island, and extends over dry and firm land. The undulations of the ground are slight and gentle, with an average surface elevation of a little less than 2 metres above high-water mark. The line runs principally over cultivated ground, and is nearly 6⅔ statute miles in length. The ends of the base are marked by stone monuments, and there are six, so called, mile-stones planted in the line. The Edisto base is the third one measured with the compensation apparatus.

The measurement commenced January 3, 1850, at the eastern end, and terminated January 18 at the western extremity. With a view of obtaining a value for the probable error of measure, a distance of 270 metres was measured three times. The compensation tubes Nos. 1 and 2 were

compared with the standard bar, both before and after the base measure; in these comparisons the length and the co-efficient of expansion of the standard have been taken as found by direct experiments, for which see Coast Survey Report of 1862, Appendix No. 26.

Six sets of comparisons were made, in five of which the temperature was slightly rising, and the combination of the individual results in each was such as to eliminate any change in the interval of the comparison of the standard and tubes. The first set, being at the comparatively low temperature of 34°.83 Fahr., was not used, in order that the mean temperature during the comparisons should approximate, as near as may be, to the temperature during the base measurement. The comparisons for tube 1 gave the following results:

| Date. | Condition of temperature. | Mean temp. | Length of tube 1. |
|---|---|---|---|
| 1850. | ° | ° | *Metres.* |
| Jan. 1, p. m. | Falling, 4.1 | 47.65 | 5.9998620 |
| Jan. 2, a. m. | Rising, 1.1 | 47.75 | 502 |
| Jan. 20, a. m. | Rising, 0.6 | 52.16 | 589 |
| Jan. 22, a. m. | Rising, 0.9 | 46.28 | 413 |
| Jan. 27, a. m. | Rising, 0.2 | 63.14 | 953 |

Hence, length of tube 1, $5^m.9998615 \pm 0^m.0000063$ from comparisons made at a mean temperature of 51°.40 Fahr. The length of tube 2 we derive directly from the comparisons with tube 1, taking, however, all six sets, these comparisons being independent (or very nearly so) of temperature. We find the difference $0^m.0001327 \pm 0^m.0000025$, by which quantity tube 2 is shorter than tube 1. Their length as used for the Edisto base is, accordingly:

Length of tube 1.....$5^m.9998615 \pm 0^m.0000063$
Length of tube 2.....$5^m.9997288 \pm 0^m.0000063$

The general treatment of the measures for length of the base-lines depending upon the compensation apparatus is the same for all, and is based on the supposition that the mechanical compensation, originally perfected in 1846, remained sensibly unchanged. To guard, however, against any possible differential expansion, the temperature during the base measure should be near that of the comparisons. In the present case the former temperature was 59°.3, the latter 51°.4, difference, 7°.9 Fahr. In the previous discussions of the length of the Dauphine and Bodies Islands base-lines, it has been fully stated that the actual compensation of the tubes for different temperatures and for different rates of change of temperatures can not be called in question by any comparisons made in the field, when the bar and the thermometers can only partly be protected from the changes of the temperature of the air. Under these circumstances we must be satisfied with an approximate knowledge of the actual effective temperature of the mass of the bar, and the accuracy of the base measure will mainly depend upon the closeness with which we can assign the true temperature of the standard during the comparisons. To make some additional allowance for this circumstance, the probable error above assigned to the resulting length of the tubes has been increased to an amount which corresponds to an effect of an outstanding possible differential expansion of nearly $\frac{1}{30}$ of the full expansion, or, what comes to the same thing, of nearly $\frac{1}{4}$° Fahr. uncertainty in the indicated thermometer temperature, due to index or graduation error.

The greater number of tubes are measured level or with small inclinations, and none of the angles of inclination rise above $1\frac{1}{2}$°. The sum total of corrections for inclination is $-0^m.20486$

The average level of the island is 5.6 feet above high-water mark, the average rise and fall of the tide is 5.2 feet, and the average elevation of the axis of the tubes above the ground is 3.5 feet, which gives 3.57 metres to be used for the reduction of the base to the half-tide level of the ocean. This amounts to $-0^m.00600$, the middle point of the base being in latitude 32° 32′, and the azimuth of the line 61° 20′ W. of S. and E. of N.

The resulting length of the base is as follows:

| | Metres. |
|---|---|
| 1786 tubes of mean length | 10716 — 0. 36586 |
| 1 tube, No. 1 | 6 — 0. 00014 |
| Correction for inclination of tubes | — 0. 20486 |
| Reduction to half-tide level of ocean | — 0. 00600 |
| | 10722 — 0. 57686 |
| Resulting length of base | 10721. 42314 |

We have also the following resulting distances of the mile-stones from the east end of the base:

| | Metres. |
|---|---|
| To first mile-stone | 1607. 9442 |
| To second mile-stone | 3215. 8884 |
| To third mile-stone | 4823. 8326 |
| To fourth mile-stone | 6431. 7760 |
| To fifth mile-stone | 8039. 7192 |
| To sixth mile-stone | 9647. 6617 |

The probable error in the length of the base arising from the uncertainty in the assigned length of a tube, is $\pm 0.0000063$ times $1787 = \pm 0^{m}.01126$; that arising from an uncertainty of a supposed differential expansion or index error equals $\pm 0^{m}.01787$; if, however, we assume a defect of $\pm \frac{1}{3}°$ instead of $\pm \frac{1}{4}°$, we find $\pm 0^{m}.0229$; the two combined give $\pm 0^{m}.02552$

From the three measures of a short experimental line of forty-five tubes treated similarly as the five measures over a shorter line on Bodies Island, in 1848, the probable error of transfer $\varepsilon_t$ equals $\pm 0.082$ millimetres, and the probable error of contact $\varepsilon_c$ equals $\pm 0.052$ millimetres. The first kind of errors accompanies the operation of transferring the end of a tube to a mark on the ground by means of a sector; the second kind of errors arises principally from instability of tubes due to yielding of ground by the weight of the apparatus, to elasticity of ground and of apparatus, from disturbances occasioned by observers walking about the apparatus, and from pressure of wind against its sides, or other influences. Taking the mean value of as $\varepsilon_t$ found here and at Bodies Island, and supposing fifty-six transfers or fourteen working days, we find the effect on the base $= \pm 0.075\sqrt{56}$, also the effect of the contact error $= \pm 0.052\sqrt{1786}$, and by their combination $\pm 2^{mm}.27$

The total probable error of the base becomes, accordingly:

$\sqrt{(0.02552)^2 + (0.00227)^2} = \pm 0^{m}.02561$, which is equal to $\frac{1}{418600}$ of the length.

We have, consequently, the final value of the measured length of the Edisto Island base,

$$10721.4231 \pm 0.0256 \text{ metres}$$

and its logarithm

$$\begin{array}{rr} & 4.0302524365 \\ \pm & 10374 \end{array}$$

---

## PART IV.—RESULTING LENGTH AND PROBABLE UNCERTAINTY OF THE BASE-LINE MEASURED ON KEY BISCAYNE, CAPE FLORIDA, IN 1855, BY A. D. BACHE, SUPERINTENDENT U. S. COAST SURVEY.

[Reported August 29, 1872.]

In October, 1849, Assistant F. H. Gerdes was instructed to examine and report on the practicability of measuring a primary base-line on Key Biscayne, Florida Reef, in consequence of which a plane-table survey was made of the Key in the winter of 1850–'51, when a site suitable for the purpose was found and determined on. The line is a little over 3½ statute miles in length, and follows the eastern side of the island in a nearly north and south course. It is but little elevated above the sea, parts of the surface being actually below the mean tide-level, and passes over a firm calcareous soil, with irregularities of surface generally less than 3 feet in height; it traverses also some patches of marshy ground. The whole was thickly covered either with coarse grass or a dense growth of palmettoes and mangroves, the roots of which formed a considerable obstacle to the preparation of the line for measure. In December, 1849, a preliminary and broken line was measured by Assistants F. H. Gerdes and J. E. Hilgard, by means of two wooden rods, each 4

metres in length. This measure was used until 1855, when the primary line was measured with the compensation tubes, under the immediate direction of the Superintendent of the Survey. The measure commenced at the northern end April 9, and terminated at the southern end April 18, 1855. It is the fourth line measured with this apparatus. The middle of the base is in latitude 25° 41′ and its azimuth is 2° 28′ west of north and east of south. Stone monuments mark the terminal points of the base, and there are also three mile-stones inserted in it. The compensation tubes 1 and 2 were compared, for length, with the standard bar, both before and after the base measure. The first sets of comparisons are used for the measures taken before April 13, on which day one of the agates of tube 1 was shivered by an accident. After grinding a new surface to the agate, and straightening its supporting stem, the tube being now designated tube 1 bis, the measure of the base was completed, the last sets of comparisons serving for this portion of the line. In the computations for length of tubes, that of the standard and its co-efficient of expansion were taken from Coast Survey Report for 1862, Appendix No. 26.

The results of the first series of comparisons are as follows:

| Date. | Condition of temperature. | Mean temp. | Length of tube 1. |
|---|---|---|---|
| 1855. | ° | ° | *Metres.* |
| March 29, p. m. | Falling, 1.3 | 70.70 | 5.9999044 |
| April 1, a. m. | Rising, 2.6 | 58.76 | 197 |
| April 2, a. m. | Rising, 1.7 | 57.72 | 218 |
| April 3, a. m. | Rising, 0.7 | 69.83 | 474 |
| April 5, a. m. | Rising, 0.5 | 73.93 | 820 |
| April 6, p. m. | Falling, 0.2 | 82.07 | 189 |

According to principles stated in the reports of preceding base measures with this apparatus, the results of sets 1 and 6 (with falling temperatures) were combined with sets 4 and 5, and the mean of sets 2 and 3 (with rising temperatures), which gives the length of tube $1 = 5^{m}.9999308 \pm 0^{m}.0000077$, and from differential comparison the length of tube $2 = 5^{m}.9997542 \pm 0^{m}.0000077$

The second series of comparisons gives the following results:

| Date. | Condition of temperature. | Mean temp. | Length of tube 1 bis. |
|---|---|---|---|
| 1855. | ° | ° | *Metres.* |
| Apr. 19, a. m. | Rising, 1.5 | 74.33 | 5.9995114 |
| Apr. 19, a. m. | Rising, 1.1 | 81.95 | 5093 |
| Apr. 19, p. m. | Falling, 1.8 | 77.15 | 5057 |
| Apr. 20, a. m. | Rising, 1.6 | 73.66 | 4887 |
| Apr. 20, a. m. | Rising, 2.2 | 75.72 | 5213 |
| Apr. 20, p. m. | Falling, 0.7 | 83.00 | 4851 |
| Apr. 20, p. m. | Falling, 1.0 | 77.74 | 4748 |
| Apr. 21, a. m. | Rising, 1.4 | 73.30 | 5241 |
| Apr. 21, a. m. | Rising, 0.8 | 75.08 | 5514 |
| Apr. 21, a. m. | Rising, 1.4 | 84.59 | 5051 |

Combining, as before, the results at falling temperatures with results at rising temperatures, we find length of tube 1 bis $= 5^{m}.9995022 \pm 0^{m}.0000047$, and from differential comparison, the length of tube $2 = 5^{m}.9997638 \pm 0^{m}.0000050$ The mean temperature during the first series of comparisons was 71.9°, during the second series 78.1°, and during the base measure 84°.3 Fahr. In the reduction of the base the mean value for length of tube 2, or $5^{m}.9997610 \pm 0^{m}.0000012$, is used, this tube

having apparently sustained no injury from the accident. The unit of length is the Committee metre, the same in which all distances of the Survey are expressed.

The conclusions arrived at respecting the compensation of the apparatus for absolute temperatures and for changes of temperature have been stated in full in preceding reports, especially in that of the Epping base (Coast Survey Report for 1865, pp. 189–191), and it suffices to remark that they are necessarily adopted here.

The greatest inclination of any tube during the measure was 1° 20′, and the sum total of corrections for inclination equals —0m.14681 The average level of the surface is only 0.06 foot above the half-tide level; adding 3.5 feet for average elevation of axis of tubes during measure, the reduction of the base to the sea-level becomes —0m.00100

The resulting length of the base is as follows:

| | Metres. |
|---|---|
| 181 tubes 1 | 1086 — 0.01253 |
| 302 tubes 1 bis | 1812 — 0.15034 |
| 482 tubes 2 | 2892 — 0.11520 |
| Correction for inclination of tubes | — 0.14681 |
| Excess of last tube over south end | — 0.34790 |
| Reduction to half-tide level of ocean | — 0.00100 |
| | 5790 — 0.77378 |
| Resulting length of base | 5789.22622 |

We have also the following resulting distances to the so-called mile-stones:

| | Metres. |
|---|---|
| North end of base to first mile-stone | 1607.9583 |
| North end of base to second mile-stone | 3215.8793 |
| North end of base to third mile-stone | 4823.7804 |

The probable error in the length of the base arising from the uncertainty in the assigned length of the tubes is ±0m.00284 If we suppose the mean index or graduation error of the thermometers to be ⅓°, and if we suppose this to cover also the uncertainty arising from any possible differential expansion, the mean temperature during comparisons being 9°.3 Fahr. lower than that of the base measure, we have to add the probable uncertainty ±0m.01237 Referring to the reports on the length of the Bodies Island and Edisto Island base-lines for the probable error of contact ($\varepsilon_c$) and the probable error of transfer ($\varepsilon_t$), the probable error in the length of the base arising from the measurement proper is ±0m.00106 Combining the uncertainties from these three sources, we find the probable error of the length of the Key Biscayne base =±0m.01274, equal to $\frac{1}{454400}$, nearly, of its length.

We have, consequently, the final value of the measured length of the Key Biscayne base.

$$5789.2262 \pm 0.0127 \text{ metres}$$

and its logarithm

$$\begin{array}{r} 3.7626205204 \\ \pm \quad 9557 \end{array}$$

---

## PART V.—RESULTING LENGTH AND PROBABLE UNCERTAINTY OF THE BASE-LINE MEASURED AT CAPE SABLE, FLORIDA, IN 1855, BY A. D. BACHE, SUPERINTENDENT U. S. COAST SURVEY.

[Reported September 20, 1872.]

In April, 1849, Assistant F. H. Gerdes received instructions from the Superintendent of the Survey to reconnoitre the vicinity of Cape Sable, Florida, for a site of a primary base-line. In the following winter a suitable site was found, lying between the Gulf shore and the everglades, and running to the eastward and northward from the cape for 4 miles.

The ground selected presents to the eye an almost unbroken level, and but a small amount of labor was required to prepare it for measure.

The soil is composed of calcareous clay, with a layer of vegetable matter from 3 to 6 inches in depth; it is firm and solid when dry, but soft and shaky when wet. The general elevation of the surface above the Gulf level is about half a metre.

Immediately after the completion of the measurement of the Key Biscayne base, in April, 1855, the observing party was transferred to Cape Sable, where the operation of final measure was commenced May 3 and concluded May 11, 1855. The direction of measure was from SW. to NE. The base termini and the first and third mile are marked by iron screw-piles; the second mile, or middle of the base, is marked by a stone. Its middle point is in latitude 25° 08′, and the azimuth of the line is 20° 07′ north of east and south of west.

This is the fifth base measured with the compensation apparatus.

The comparisons of the standard with the tubes, taken in April, 1855, at Key Biscayne, Florida, will also answer for the Cape Sable base, and stand in the place of those comparisons usually taken before the base measure; no appreciable change in the apparatus could be supposed in the interval. A second set of comparisons was taken immediately after the base measure in May, 1855.

The principle of combination of the separate results was the same as that adopted for the preceding base-lines measured with this apparatus, the adopted length and co-efficient of expansion of the standard being the same for all. The result of the first series of comparisons is given in the account of the Key Biscayne base, viz: Length of tube 1 bis, $5^m.9995022 \pm 0^m.0000047$, and of tube 2, $5^m.9997638 \pm 0^m.0000050$, the mean temperature during the comparisons being 78°.1 Fahr. The second set of comparisons may be arranged in two groups, one with falling temperatures, the other with rising temperatures, one result with stationary temperature being added to each. The differences in length between standard and tube 1 bis, expressed in scale divisions, of which one equals $0^m.0000039865$, are as follows:

| Falling temperature. | | | | Rising temperature. | | | |
|---|---|---|---|---|---|---|---|
| 1855. | Amount. | Mean temp. | Diff. in length. | 1855. | Amount. | Mean temp. | Diff. in length. |
| | ° Fahr. | ° | d | | ° Fahr. | ° | d |
| May 14, p. m. | 1.35 | 81.58 | 606.7 | May 15, a. m. | 2.50 | 81.30 | 578.6 |
| May 14, p. m. | 2.70 | 79.41 | 589.7 | May 15, a. m. | 0.95 | 83.35 | 604.9 |
| May 15, p. m. | 1.00 | 83.54 | 621.8 | May 17, a. m. | 1.25 | 80.31 | 577.3 |
| May 15, p. m. | 0.75 | 81.34 | 601.9 | May 17, a. m. | 0.75 | 82.11 | 598.4 |
| May 15, p. m. | 0 | 82.47 | 612.9 | May 17, p. m. | 0.25 | 83.37 | 617.9 |
| | | | | May 15, p. m. | 0 | 82.47 | 612.9 |

Mean difference, standard and tube 1 bis, at 81°.58 Fahr., and falling $605^d.9$, and at 82°.12 Fahr. and rising $597^d.0$; the mean or resulting length becomes accordingly $5^m.9994602 \pm 0^m.0000132$ Ten sets of comparisons, intermediate between those given above, give tube 2 longer than tube 1 bis $0^m.0002794 \pm 0^m.0000017$; hence tube 2 equals $5^m.9997396 \pm 0^m.0000133$

Combining the two values found from comparisons before and after the base measure, we have the final values of length for tube 1 bis and tube 2, as follows:

Tube 1 bis $= 5^m.9994812 \pm 0^m.0000070$ and
Tube 2 $= 5\ .9997517 \pm 0\ .0000071$

The mean temperature during the second set of comparisons was 81°.85 Fahr. The resulting lengths of the tubes were therefore determined at a temperature of 80°.0 Fahr.

The conclusions reached respecting the compensation of the tubes for absolute temperatures and for changes of temperature have been given at length in preceding reports, especially in that on the length of the Epping base, the last measured (up to this time) with the apparatus; for which see Coast Survey Report of 1865, pp. 189–191.

But a very few tubes were used in an inclined position and the total correction for inclination amounts only to $0^m.00572$ The reduction to the half-tide level of the Gulf of Mexico is also very small, viz, $0^m.00151$

It has been the practice at all the base-lines measured with the compensation apparatus to add, on the ground, a small linear quantity equal to the correction for inclination to each of the mile-marks, thus making their distances very nearly equal to a whole number of tubes; on the present occasion this was slightly modified by counting from the middle of the base instead of one of the ends. This will therefore give two additions to the measured length; besides, there is a small correction for deviation of screw-pile at the west end, which could not be inserted with its axis perpendicular. The length of the base is defined by the centers of the screw-piles at each end.

*Resulting length of the base.*

| | Metres. |
|---|---|
| 1072 tubes of mean length | 6432 — 0.41117 |
| Correction for inclination of tubes | — 0.00572 |
| Correction for deviation of screw-pile at west end | + 0.00400 |
| Addition for inclination at west end | + 0.00380 |
| Addition for inclination at east end | + 0.00194 |
| Reduction to half-tide level of Gulf | — 0.00151 |
| | 6432 — 0.40866 |
| Resulting length of base | 6431.59134 |

We also have the following distances to the so-called mile-marks:

| | Metres. |
|---|---|
| Southwest end of base to first mile-mark | 1607.9008 |
| Southwest end of base to second mile-mark | 3215.7976 |
| Southwest end of base to third mile-mark | 4823.6944 |

The probable error in the length of the base, arising from the uncertainty in the assigned length of the tubes, is $\pm\ 0^m.00750$ If we suppose the mean index or graduation error of the thermometers of the standard bar to be $\frac{1}{8}°$, and if we suppose this to cover also the uncertainty arising from any possible differential expansion of the tubes, the mean temperature during the comparisons being 80°.0 Fahr., while the mean temperature during the base measure was 89°.7 Fahr., we have to add the probable uncertainty $\pm 0^m.0137$ Referring to my reports on the length of the Bodies Island and Edisto Island base-lines for the probable error of contact of tubes ($\varepsilon_c$) and for the probable error of transfer, to the ground or from the ground ($\varepsilon_t$), the probable error in the length of the base arising from the measuring operation proper is $\pm 0^m.0011$ Combining the probable errors from these three sources, we find the probable error of the length of the Cape Sable base $= \pm 0^m.0157$, equal to $\frac{1}{409600}$, nearly, of its length.

We have, consequently, the final value of the measured length of the Cape Sable base:

$$6431.5913 \pm 0.0157 \text{ metres}$$

and its logarithm

$$3.8083184417$$
$$\pm \quad 10\ 502$$

Blank page retained for pagination

# APPENDIX NO. 18.—1889.

## REPORT OF GEORGE DAVIDSON, ASSISTANT U. S. COAST AND GEODETIC SURVEY, APPOINTED BY THE PRESIDENT OF THE UNITED STATES AS THE DELEGATE TO THE NINTH CONFERENCE OF THE INTERNATIONAL GEODETIC ASSOCIATION HELD AT PARIS, OCTOBER, 1889.

---

SUB OFFICE, U. S. COAST AND GEODETIC SURVEY,
*San Francisco, Cal., June* 24, 1890.

SIR: Your instructions of September 7, 1889, governed my action as the Delegate appointed by the President of the United States to the Ninth Conference of the Association Géodesique Internationale at Paris, October 3 to 12, 1889.

The instructions were made to cover a large amount of work in order that such of the subjects as presented themselves favorably might be reported upon.

After conferring with you in Washington, I left New York on the 10th of September and returned to Washington on the 15th of November.

### OBSERVATIONS FOR PERSONAL EQUATION WITH THE STANDARD OBSERVERS AT GREENWICH, PARIS, AND BERLIN.

Although the weather was rainy when I arrived in England, I immediately put myself in communication with the Royal Observatory at Greenwich. The Astronomer Royal was in Paris, but the chief assistant offered me every facility. The weather continuing bad, I went to Paris September 23.

At Paris I called upon Professor Lœwy, of the Observatory, and examined the instruments with him. The meridian instrument was fitted with only five transit threads, and therefore the proposed observations were abandoned.

At Berlin, near the end of October, the weather was unfavorable, and no observations were made. Director Foerster, whom I had known since 1875, very cheerfully placed me in communication with the transit observer.

Preceding the Conference of the International Geodetic Association, I spent the time in gathering information, examining the works of precision in the Exposition, and visiting the International Bureau of Weights and Measures* at Breteuil.

I received your instructions that I had been designated to bring to Washington the National Prototypes of the Metre and Kilogramme. I need not mention this matter in detail, as I have already given you two detailed reports thereon, when delivering these standards to your charge. In these reports there is an account of my visit to Breteuil and remarks thereon.

### NINTH CONFERENCE OF THE ASSOCIATION GÉODÉSIQUE INTERNATIONALE.

The meetings of the association were held in the grand reception halls of the Ministry of Foreign Affairs. The preliminary meeting of the 2d. of October was informal, but gave a very good opportunity for the interchange of kindly greetings. On the 3d. the Conference was opened

---

* Bureau International des Poids et Mesures.

by an address of welcome by the Minister of Foreign Affairs (Annuaire des Longitudes 1890, pp. 707–711), the response by General Ibañez, the President of the Permanent Commission (Annuaire, pp. 711–713), and the closing speech of M. Faye, the President of the Association (Annuaire, pp. 713–717).

I understand there were thirty-eight delegates present from fifteen countries, and that ten countries were unrepresented. A large number of invited savants attended the meetings.

The published programme of the Ninth Conference was carried out. This embraced—

I. The annual reports of the Permanent Commission, and of the Central Bureau.

II. Reports upon the condition of the geodetic works of the Association.

(*a*) The astronomical determinations of the longitude, latitude, and azimuth, by Professor Van de Sande Bakhuyzen.

(*b*) Upon the triangulations, by General Ferrero.

(*c*) Upon the measurement of base-lines, by Colonel Bassot.

(*d*) Upon the levelings of precision, by Professor Hirsch.

(*e*) Upon the self-registered tides, by General Ibañez.

(*f*) Determinations of gravity by the pendulum, by Professor Helmert.

(*g*) Local deflections of the plumb-line, by Professor Helmert.

III. Reports of the delegates upon the progress of geodetic work in their respective countries.

IV. Upon the selection of a fundamental zero point for the levelings in Europe.

V. Nomination and election of five members to the Permanent Commission.

VI. Examination of the financial condition of the Association, and the establishment of a new scale of assessments.

Under subject III, I made a report upon the condition of the Coast and Geodetic Survey work. I had intended to make a verbal communication, but I learned that only written communications were received, and so I was forced to prepare a report from recollection and the scant material I had with me. A copy of this I transmitted to you. With that report I presented in your name twenty-two examples of pamphlets, "Methods and Results," and specimens of the Bulletins and Notices to Mariners; together with a series of large photographs illustrating the work at the high stations in the Sierra Nevada.

The pamphlets embraced four on gravity; ten on arcs of the meridian, base-lines, heights, levelings, and longitudes; five on magnetism; one bulletin, and two notices to mariners. To these were added maps showing, respectively, the progress of the measurement of the arcs of the meridian and the parallel, and the oblique arc of the Atlantic, the telegraphic longitude work, the precise leveling lines and their stations, the stations of the gravity experiments, and maps of the magnetic elements.

The cordial greeting from you very favorably impressed the delegates; the work of measurement of arcs of meridian and parallel astonished most of them, and the recommendation that France remeasure the Peruvian arc particularly satisfied the French delegates, as you will see by the mention of the matter in the Annuaire of the Bureau of Longitudes. At the last meeting I was elected a member of the Permanent Commission, but have not yet been officially notified thereof.

I attended all the official receptions, etc., as you will see by my monthly report for October.

The expressed opinions of the French delegates, which I find in the Annuaire for 1889, gave me great satisfaction. I have already informed you that my report was translated for the Annuaire of 1890, and that the recommendation for the remeasurement of the Peruvian arc was particularly satisfying to them. The report will appear in 1891.

I extract from the Annuaire the matter relating directly to the Survey, and refer you to the speeches of the Minister of Foreign Affairs, General Ibañez, and M. Faye.

EXTRACT FROM THE ANNUAIRE OF THE BUREAU OF LONGITUDES FOR 1890, NINTH CONFERENCE OF THE INTERNATIONAL GEODETIC ASSOCIATION (pp. 719–721).

Obligé de remettre au prochain Annuaire l'examen des principaux résultats de cette importante session, je ne puis cependant omettre ici l'événement principal qui s'y est produit, à savoir la venue du délégué des États-Unis, M. G. Davidson, et l'accession désormais officielle de ce grand pays à l'Association géodésique. Le Rapport de M. Davidson sur l'état des travaux géodésiques exécutés jusqu'ici sur le territoire de l'Union a été écouté

avec le plus vif intérêt. Délégués et invités, tout le monde sentait qu'il s'agissait de l'apparition d'une nouvelle grande puissance sur un terrain scientifique où l'on s'était trop accoutumé jusqu'ici à ne voir guère figurer que des Européens. Tous ont applaudi à cette invasion d'un nouveau genre.

Quant à nous, Français, nous avons été particulièrement touchés de la courtoisie de la déclaration suivante:

Le Surintendant du *Coast and Geodetic Survey* me charge d'appeler l'attention du Congrès sur l'opportunité d'une nouvelle mesure de l'arc du Pérou. Il n'y a sans doute pas deux opinions quant à l'insuffisance de cet arc, à cause de sa position particulière et du petit nombre des observations astronomiques. Nous considérons que cet arc est à remesurer avec toutes les resources de la Science moderne, et que la France devrait entreprendre ce travail avant un trop long délai.

Le Président a répondu que le Bureau des Longitudes s'était déjà préoccupé de la nécessité d'entreprendre une nouvelle mesure de l'arc du Pérou, de concert avec le Président de la République de l'Équateur; que ses relations avec l'éminent Président de cet État, Son excellence dom Antonio Florès, lui faisaient espérer que bientôt des négociations pourraient être menées à bonne fin entre ce gouvernement et celui de la République Française, afin de mettre au niveau de la Science actuelle et d'élargir même les opérations que l'Académie des Sciences avait entreprises, au siècle dernier, avec le concours des savants officiers de la Marine espagnole, en vue d'étudier la forme et les dimensions du globe terrestre.

REVUE DES PRINCIPAUX TRAVAUX DU BUREAU DES LONGITUDES EN 1889; PAR LE SECRÉTAIRE (M. LŒWY.) (pp. 747–749).

On se rappelle que M. d'Abbadie avait proposé l'an dernier de mesurer un arc de méridien dans le voisinage de l'équateur. On ne possède en effet qu'un arc dans cette région; c'est celui du Pérou, et malgré l'habileté des Académiciens français, les progrès incessants apportés depuis un siècle et demi aux instruments et aux méthodes d'observation ne permettent plus à leurs mesures de se maintenir à la place honorable qu'elles ont occupée pendant longtemps. L'idée de reprendre l'arc du Pérou avait plusieurs partisans au sein du Bureau. On ne s'était décidé à s'occuper du Congo que parce que les opérateurs se trouveraient en possession française, et que la mesure projetée apporterait non seulement une donnée précise à la Science, mais encore une base importante à la Carte définitive du pays. Le Bureau des Longitudes a continué à s'occuper de la question; il s'est fait renseigner par M. le Commandant Ch. Rouvier, auteur de la Carte actuelle du Congo; il a eu avec M. de Brazza plusieurs conférences, à la suite desquelles on a pu établir un devis des dépenses qu'entraînerait l'expédition préparatoire.

Depuis, les choses ont changé d'aspect. D'abord, M. Faye recevait le 10 juillet dernier une lettre de Antonio Flores, Président de la République de l'Équateur, lui demandant d'établir une collaboration scientifique qui permît à son pays de rendre des services à l'Astronomie. Nos idées se trouvaient ainsi reportées naturellement vers l'arc de Bouguer, qui est situé sur le territoire de la République de l'Équateur. Cette tendance n'a pu que s'accentuer à la suite de ce qui s'est passé au Congrès de l'Association géodésique internationale, réuni à Paris au mois d'octobre 1889. Le délégué des États-Unis, M. Davidson, a proclamé à nouveau la nécessité de remesurer l'arc du Pérou. Il a reconnu gracieusement que la France, qui avait fait la mesure au siècle dernier, avait tous les droits à la refaire. Le Coast Survey des États-Unis serait disposé à la reprendre lui-même, mais seulement dans le cas où ne voudrions pas nous en charger. Une raison entre bien d'autres doit porter notre pays à accepter la proposition: c'est par la combinaison de l'arc du Pérou avec la méridienne de France qu'on a eu la première détermination precise des éléments du globe terrestre, sur lesquels repose le système métrique. La méridienne de France vient d'être revisée par le Service géographique de l'armée; elle est à la hauteur de la Science actuelle. N'est-il pas juste dès lors que nous reprenions de même l'œuvre des Académiciens français du siècle dernier au Pérou? Le Bureau des Longitudes a saisi de la question l'Académie des Sciences, dont les droits ne pouvaient être méconnus. L'Académie a accepté avec empressement l'idée de reprendre la mesure de Bouguer: elle a émis le vœu que le Bureau des Longitudes fût chargé de la direction des opérations, promettant d'ailleurs de l'aider de tout son pouvoir auprès du Gouvernement. Nous avons tout lieu d'espérer que les négociations diplomatiques ne recontreront pas de difficulté, et si notre Gouvernement consent à faire les frais de l'expédition, nous sommes certains de trouver des collaborateurs dévoués dans les officiers du Service géographique et du Service hydrographique, et peut-être aussi chez quelques officiers de la Marine.

Il a été question à plusieurs reprises, dans nos séances, de l'utilité qu'il y aurait dans l'avenir à mesurer un arc de méridien au Brésil, ou dans la République Argentine où la configuration du territoire permettrait d'opérer sur un arc très étendu.

If you should ask me whether I learned anything of immediate practical value to the field work and methods of the Coast and Geodetic Survey, I should have to make a qualified statement. The Conference was evidently not intended for full and exhaustive expression of means and methods; that, I believe, is fully and quietly discussed at the yearly meetings of the Permanent Commission. I found thorough and earnest geodesists who are anxious to improve every means and every method, and who, deprecating inferior means, are very urgent for the highest class work on the best devised schemes. In some conversations about base-lines and the means of measuring them, the means and rapidity of execution by the Coast and Geodetic Survey were suspected as not leading to the highest character of results. I had long since (1875–'78) seen several of the base apparatus used in India, Prussia, France, and Spain, and knew the character of the ground over which the line was measured and the personnel; and some reiterated points have been suggestive, but to-day I would not adopt any of their methods in their entirety. Of the base apparatus I shall speak in another place. Of the instruments I can express the views I entertained after examining the workshops and Exposition in 1875 and 1878, that I have seen very much to avoid.

My former judgment is confirmed on one essential proposition, that if our observers and mechanicians will work in harmony and strive to obtain the highest excellence for the advantage of the work alone, I firmly believe we are fully competent to lead in the construction of instruments of precision. The observer and the mechanician are not always in accord because the mechanician is rarely an observer, and the character of the work of the Coast Survey demands that the mechanical means shall be adequate to the delicate manipulation and requirements of the most skillful observer.

And in another proposition I am confirmed, that the civilian methods of the Coast Survey are superior to the military methods of the Governments of Europe; witness the number of officers and men employed to measure a base-line, and the number employed in the observations of the stations of the great quadrilateral between Spain and Algeria.

Preceding the Conference of the Association I visited the Exposition to examine such instruments as were on exhibition, and during it and subsequently I made visits for examinations of objects that were not regularly placed among the instruments. The number of exhibitions that had instruments and optical means was about twenty-five. The War Department had a large and excellent exhibit, including base apparatus with the microscope arrangements. With Commandant Defforges and six of the foreign delegates I visited the Bureau of geodesy and geography, examining the instruments and the methods of work.

After the Exposition I visited some of the makers of instruments, but found that all their best work was in the Exposition.

I was disappointed in the character of the instruments of precision applicable to geodesy and astronomy, and think it was inferior to the Exposition of 1878.

In one sentence I may say that I saw nothing which we need take for a guide.

There seems a desire to devise universal instruments in the most compact form. These generally run into complex arrangements with brisé or eccentric telescopes, and usually carry the apparatus necessary for reversal.

All the universal instruments seemed too top-heavy, the three foot-screws were at the ends of comparatively short arms, and were themselves too small.

The best exhibit in geodetic instruments was by Brünner. He had a meridian instrument with transit axis estimated at 18 inches, large vertical circle, iron stand, and altogether too much top gear to put on the three contracted foot-screws. Reversing apparatus to be put on the frame. He had a new meridian mark with the mira about 10 inches from the lens and on the same base of iron. The theodolite he exhibited was the same type as that of 1878, then intended for the Spanish-Algerian quadrilateral across the Mediterranean. The objective is larger than that of 1878. This theodolite is represented in the War Department exhibition by the theodolite used in the long lines of Colonel Perrier's work in Spain-Algeria.

It is marked by fewness and simplicity of parts and fair harmony of proportion for measuring horizontal directions. I might suggest a question about the adequacy of its optical power for long lines, and certainly Perrier's exhaustive report of his operations shows that he was unable to see

the heliotrope signals, and resorted to electric lights developed from dynamos run by horse-power. The horizontal circle of 16 inches diameter reads by four microscope micrometers instead of three, involving more labor and observing upon a less number of graduations. I think the observer must be in a constrained position when reading the micrometers, because the horizontal plane of the telescope is only about 2 inches above the microscopes. The circle is turned on the vertical axis to new positions and clamped by three screws in each position. Should the surface planes of contact be irregular this clamping would warp the horizontal circle in each new position.

The pillars for carrying the telescope are so short that the instrument is not adapted to the observing of azimuths by means of a close circumpolar star, because the telescope can not be properly elevated. Instead, the transit instrument must replace the theodolite, whereby the possibility of error is introduced and labor and extra time are consumed.

The graduations are illuminated by light from above the instrument, passing down and through a right-angled prism fixed for each microscope. This requires much more elaborate installation than is used on the Coast and Geodetic Survey, but doubtless gives the observer greater freedom, more satisfaction, and clearer readings.

The vertical axis of the instrument is short. There is one rather heavy finder on the horizontal axis.

I subsequently called at the establishment of Brünner, but he informed me that all of his available work was at the Exposition.

In the same case was a 12-inch theodolite by Mertz, and also a reversible pendulum by Commandant Defforges, of the Geodetic Bureau of the War Department. The description and results of this instrument have been fully reported upon by him; but I here insert the remarks made by the Secretary of the Bureau of Longitudes in the Annuaire for 1890:

COMMANDANT DEFFORGES, ANNUAIRE 1890 (p. 750).

> Tous les membres du Bureau ont suivi les expériences très intéressantes faites à l' Observatoire de Paris sur le pendule par M. le Commandant Defforges. L'appareil est presque parfait; l'un de nous a proposé quelques modifications de détail qui lui donneront une précision plus grande encore. Un Rapport a été fait, et le Bureau se propose de rédiger des instructions générales sur les mesures du pendule, et d'indiquer les points du globe où il serait le plus utile de faire de nouvelles observations. Nous voudrions que, dans ces études, on pût utiliser le concours de quelques officiers de Marine, dans les mers où se rendent nos navires de guerre. Il serait facile de faire à notre observatoire de Montsouris quelques conférences sur le pendule; il suffirait ensuite de commander deux ou trois appareils, et l'on aurait ainsi à peu de frais des documents scientifiques très utiles pour le perfectionnement de nos connaissances sur la figure et la constitution du globe.

A. Barthelemy had a universal theodolite with high vertical axis, telescope excentric. Except the Barthelemy instrument, the theodolites seemed to me to lack in the length of the vertical axes.

A. Hurlimann had small theodolites, telescopes excentric. A gyroscope horizon attached to sextant by Commander Fleuriais.

Wagner, Collin had vertical tide-gauge sheet which gives curves about 1¼ inches apart and the changes of high and low waters day by day are well shown.

Gautier had a very large meridian circle for the Observatoire de la Plata, and Brünner an azimuth and an altitude azimuth of 108$^{mm}$ destined for the Observatory of Besançon.

After the Conference I visited the Conservatoire des Arts et Métiers parts of two days under the guidance of Messrs. Masson and Tresca, and saw the apparatus where the National prototypes of the metre were prepared for, and received, the traces to denote the terminals of the metre. This I have already reported upon, and the details of the different operations have been printed.

In the Exposition were the chronometers of Kullberg, Webster, Parkinson and Frodsham, H. H. Hemrich; the latter from New York with a high reputation in Germany. The compensating balance of the Webster chronometer was exposed.

I also visited the establishments of some of the exhibitors, and of others not exhibiting. I found nothing new.

At the establishment of Feil and Mantois I was received very cordially by the latter, who took me through the whole of his workshops and showed me all the operations that were under way.

At the Exposition he had the most remarkable exhibitions in his line of work. Among them was the crown glass for the objective of the telescope ordered by the University of Southern California, 1.05 metres in diameter, with density 2.521, and index of refraction 1.5160. It was not wrought to the true figure, but was a beautiful disk free from bubble and striæ.

M. Antoine d'Abbadie, Member of the Institute, and of the Bureau of Longitudes, was one of the invited savants to the Geodetic Conference; he invited me to his home to see his small dip circle. It is very compact and portable, and I was struck with the means he has adopted to get accurate readings of the ends of the needle in advance of any other designer.

At the conclusion of the work of the Conference I proceeded to Berlin and examined the instruments of the observatory and at the workshops, as elsewhere mentioned.

Having returned to Paris, I gave my principal attention to the safe conveyance of the *National prototypes of the metre and kilogramme to your custody.* I have given in great detail the incidents of this pleasant duty.

On my visit to Berlin I was cordially received by Professor Foerster and examined the instruments at the observatory, where I found the universal transit made by Bamberg in 1879.

It is a prismatic telescope 51 inches in length, with a 4.6 inches objective. The frame-work and mounting is very heavily constructed in iron and rests on three foot-screws. In turning it round to put it in the meridian or prime vertical, or any other vertical, it revolves upon three rollers. When ready for observing latitude by the Talcott method the heavy telescope is lifted out by proper apparatus and reversed to observe stars north and south when observing for latitude, or for the determination of the constant of aberration.

The whole apparatus seems too heavy with cast-iron, and the telescope and its attachments too heavy to rest only on three points, yet Professor Foerster assures me it gives good results, and that the telescope brisé exhibits no flexure of the prism or its mounting.

The latitude level is checked by a second one of the same sensitiveness.

Professor Foerster says that in a series of latitude observations *two levels* of nearly equal scale value and of equal precision are used to check errors of each other. He mentions that one detected certain unexplained irregularities in the main one, and that these would have passed unknown but for the presence of the check level.

A description of this universal transit is given in the "Bericht über die wissenschaftlichen Instrumente auf der Berliner Gewerbeausstellung im Jahre 1879;" this I have not seen, but I have examined the "Beobachtungs-Ergebnisse der Königlichen Sternwarte zu Berlin. Heft No. 3. Neue Methode zur Bestimmung der Aberrations-Constante, nebst Untersuchungen über die Veränderlichkeit der Polhöhe, von Dr. F. Küstner, Observator der Sternwarte. Berlin, 1888. Ferd. Dümmlers Verlagsbuchhandlung." In this pamphlet a short description is given of the instrument and the methods of observation, with details of values of micrometer screw, etc.; and the measurement of the micrometer difference of zenith distance of the seven star pairs in which the observations extended through a year. Finally the correction to the Struve aberration constant is given, and the value of the latitude with a probable error of $\pm 0''.04$.

I beg to call attention to a point in the method of observing the micrometer difference of zenith distance of the two stars of a latitude pair. Instead of observing only one micrometer reading of a star when it culminates, an average of four pointings is made at and near the culmination of each star, and when the proper corrections are applied to the measures away from culmination the mean of the four readings is taken as one. I introduced this method many years since, but it was not adopted; the last work of the kind I observed was in Oregon in 1886, and San Francisco in 1888. Elsewhere I show that with a properly prepared eye-piece this method of observing is better than by a single pointing. The reductions are simple.

About the strains in prisms in the brisé telescopes, Bamberg says that now there is no trouble about the strain, because he has so arranged his reversing apparatus that it accommodates itself to the mass to be lifted; first, by the transverse beam having two knife-edge bearings at the ends and a cross axis in the center; and then by the two uprights of the ends of the transverse beam, which carries two friction rollers, being also free. Therefore, in raising the apparatus all the parts take their final bearings at the same instant, and all are under equal strain.

Yet this does not explain away Plantamour's statement of 1878 to me, about the deformation of his prism in front of his objective.

Bamberg says he so fits and secures the prism that there can be no irregular strain, but I do not see it.

*Levels.*—The levels used at the Berlin Observatory are of the highest character. They are made by Reichel, who exhibited his method of working to me, whereby he gets a true figure all around the inside of the tube. He is a genius in his way, and as far back as 1875 or 1878, when the Prussian geodetic officers directed me to his shop, I reported his excellent work and comparatively low prices to the Superintendent.

In his superior levels he uses an outside cylinder with graduations equal to the inner one, and placed in proper relation thereto, so as to obviate parallax in the observation. His best level tubes have a space of $2^{mm}$ to $0''.9$, etc. I have furnished to the Office the price-list of his tubes.

*Bamberg's dividing engine.*—Bamberg commenced the construction of this circle, which is about 4 feet in diameter, in 1875 or 1878, when I saw the first rudimentary parts. He found, as all other mechanicians have done, many difficulties when it came to the final trials. He says he has now overcome them all by trial and correction. He knows the small remaining errors of the whole of the graduations. The work is all done by hand, and each graduation of a circle is made after the setting has been properly made over the graduation on the machine. The setting microscope micrometers have a power of about 120 diameters, and are placed about 4 or 5 inches apart. Under this power there is no difficulty whatever in making a satisfactory setting with the parallel micrometer threads on each side of a graduation. He says the average error of a 5′ space is $0''.4$, with exceptional errors reaching about $0''.9$; and that the excentricity of a graduated circle will be less than $1''$. In the personal work the operator continues the graduating for three hours and then retires for the day, more particularly to prevent the machine changing its temperature beyond a safe limit.

I found the silver graduation circle of the machine free of oxidation, and he told me it had not been cleaned since he had made the final corrections. I am not at liberty to state the alloy which he says surpasses all others for the purpose.

He uses metallically encased thermometers lying flat on the brass graduating plate. He uses no mercury to give close contact between the metal and the thermometer bulb.

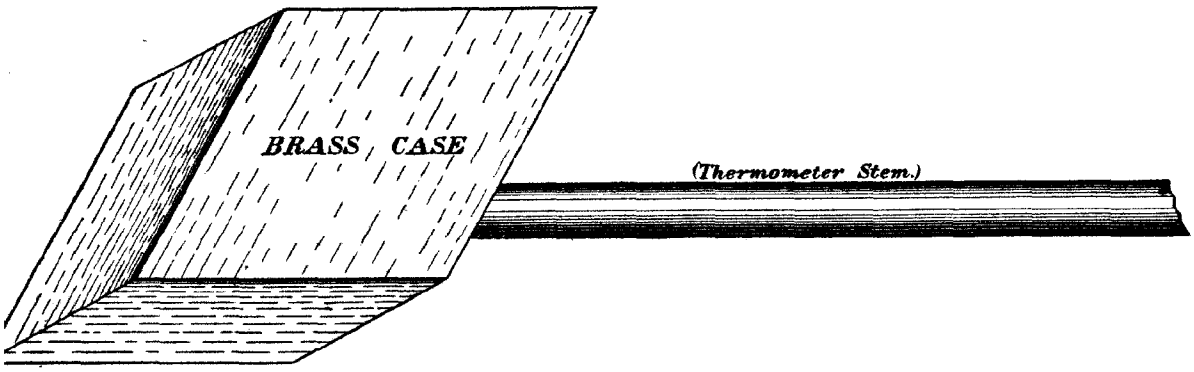


*A hollow bar as a base bar.*—Upon mentioning my idea of a bar filled with mercury for a base bar, Bamberg showed me his experimental tube. It is about 1 metre long, cylindrical, hollow, three-fourths of an inch in diameter, sealed at each end, with a plate screwed on the middle upper surface, with a one-fifth inch hole in the middle. Through this hole is the stem of a thermometer, with proper supports, and waxed in. The mercurial scale went up to about 60° C., and at the upper part were two large irregular bulbs to hold excess of mercury when the bar was heated.

The bar was filled with mercury and the thermometer stem inserted; the upper side of each end of the bar had a silver plate and cross line upon it for micrometer measurements. He says he found his main trouble in getting connection between the mercury in the bar and the capillary in the thermometer tube. He also found there was trouble with air in the tube, because he found

the changes of length of tube were not regularly indicated by the corresponding changes in the indications of the mercury. But he says he did not exhaust the subject, and gave it over.

Of course it is easily seen that unless the interior of the tube is very smooth and free from air all of Bamberg's troubles will be reproduced. This shows one of the weaknesses of the "gas-pipe base bar" proposed about 1884–5.

I have had experience with the steel barometer which I have from Würdemann, and appreciate the necessity for the highest character of workmanship in every detail of such a bar.

With Dr. Auwers I examined the Jena or "special" glass objective of Bamberg's figuring, and compared it with a 5-inch same focus ordinary objective in same tube. "Special" much superior in regard to achromatism. I saw an 8-inch "special" which he prices at 4,500 marks, being one-third the price above ordinary glass. He says it is much harder to work. He had a small hand draw-glass about 1⅜ inches, three glasses, 12-power. He makes Jena glass objectives from 3 inches upwards.

(The prices of Brashear of Allegheny for the Jena glass objectives are smaller than the above, and his workmanship can not be excelled.)

In reviewing the impressions which have become stronger with each investigation of instruments, I herewith report a few suggestions of the salient features which I have often presented to my colleagues and to the Superintendents. For the *largest class of theodolites* I prefer the graduated arc not to exceed 20 inches in diameter; graduation metal or alloy not rapidly oxidizable; graduations strong, to 5 minutes of arc; microscope micrometers to have power of about 40 diameters and to have adjustments for "run" by the observer; the objective and eye-pieces of Jena glass; objective 3½ inches at least; eye-pieces with readily adaptable prisms for high azimuth stars; ocular micrometer; long vertical axis; straight telescope with strong tube, stiff enough to handle in reversing. To reduce flexure of the telescope tube I would introduce four or six thin longitudinal pieces placed radially inside the tube, having their greatest possible breadth at the transit axis and diminishing to points at the objective and eye ends; two very light finders; long transit axis; no vertical clamps, or the Davidson open vertical clamp; fixed V's as now adopted; agate bearings of the pivots of the transit axis along the whole length of the V's; the pivots to be large in diameter; the transit axis level Λ's to bear along the whole length of the pivots; illumination free from instrument; high class transit axis level with protecting glass cylinder, graduated to avoid parallax and effect of reading-lamp heat; a thorough study of the harmony of all the parts; four large foot-screws; Davidson position circle.

*In transit instruments.*—Best objective of 3½ inches and eye-pieces of Jena glass; parallactic plate to carry also high power eye-piece for slow moving stars; and with readily adaptable prisms for high stars; straight telescope, strong tube with two very light finders; thin longitudinal ribs inside the tube to prevent flexure as in theodolite telescopes; long transit axis; no vertical clamp, or the Davidson open clamp; fixed V's and the pivots to be of large diameter and to bear the whole length of the agate faced V's; the Λ's of transit axis level to bear their whole length on the pivots; double horizontal frame with movement and strong clamping-screws as in Davidson meridian instrument, but frames somewhat heavier; the uprights to be fixed, or folding and heavier; light eye-pieces; high class transit axis level with protecting graduated glass cylinder to avoid parallax and effects of reading-lamp heat; illumination apart from instrument; reversing apparatus of the character used on the large latitude instrument at Berlin Observatory, so as to avoid straining the telescope; this apparatus to be attached to the pier and not to the instrument. In the installation I would have the foot-screws sunk into recesses in the pier so that the lower side of the frame is very near the top of the pier; then level the instrument; reduce the inclination of the transit axis to a minimum, also the deviation in azimuth; finally, cement the lower frame to the pier.

For stability four foot-screws, with a fifth one where the third one is ordinarily placed. The three to be used for rapid transit work, the four for protracted work. I use the fourth and the fifth foot-screws, and know the benefit thereof from experience and experiment.

For *transit and latitude work* with the same instrument, I have seen none that satisfy me so well as the Davidson meridian instrument. It needs some changes in detail and better objectives and higher power. With higher power for latitude observations it needs a horizontal parallactic motion of the eye-piece to admit of broader field, whereby several observations may be made near the culmination of a star.

If the instrument is constructed in harmony with a 3 or 3½ inch Jena objective and double level and a strong Davidson open clamp, it will do better work than the zenith telescope of the same objective.

I think that all "stove-pipe" eyepieces for the latitude and transit instruments should be made of aluminum, if practicable.

SUGGESTIONS ABOUT BASE BARS.

In the matter of base apparatus, the apparatus used at present in Europe is 4 metres long and a *single bar*, with two independent microscope micrometers.

The bar which I saw at the Pavillon de Breteuil, and which I understood to be the steel bar of General Ibañez, appeared to be about 1 centimetre thick and possibly 7 or 8 centimetres deep. It had originally rested on a flat piece which was screwed thereto, forming a ⊥ cross-section. *It was found that there was flexure of one or both sections and therefore the upright moved longitudinally on the lower.* The 4 metres length on the bar is measured by two cross traces, one near each end.

In the Brünner apparatus, exhibited at the military exhibit of the Exposition, the bar is compound platinum and brass, and the graduations on each near the ends serve to make a Borda thermometer of the bar. The 4 metres length is measured between two "traces," one near each end.

The striking feature in these bars is that every facility seems afforded for the bars taking the temperature of the atmosphere as rapidly as possible. In the Ibañez apparatus I understand there are four thermometers and that the bulbs are brought closely into contact with the bar by being packed in iron filings.

One bar only is used in measuring a base-line. In the field, heavy wooden tripods are carried for the support of the base bar, a point of which near each end rests upon a brass apparatus resting on the tripod head. This apparatus has a motion in the line of the base, at right angles thereto, and around a vertical axis, and is raised and depressed a small amount. It can also be leveled by the three foot-screws. Slow motion is given by fine screws in the direction of the base and at right angles.

The microscope micrometers are at each end of the bar, and are supported by three foot-screws on strong heavy wooden tripods. Above the feet the apparatus can be moved in two directions at right angles to each other. There is a telescope for determining the vertical over the station point. When this is done, this telescope is replaced by a telescope for alignment in the first setting up. The forward instrument carries a "mira," which is put in the line of the base and then replaced by an aligning telescope for putting the mira of a third microscope micrometer 8 inches ahead. These telescopes are then replaced by microscope micrometers which determine the position of the bar beneath them.

It is not necessary to exemplify the working except to say that it is comparatively slow, even when the base-line is upon a macadamized and untraveled road; and that the force at the Aarberg base of 2,400 metres length was twelve officers and ten assistants of the engineers, previously drilled by General Ibañez and his staff. See article by Dr. C. Kopp in "*Die Eisenbahn*," January 22, February 26, 1881.

From a French officer who has shared in the operation of measuring a base-line in this way I learn that one of their sources of anxiety was in the apparent vibration of the "trace" under the microscope micrometer. I understood that the magnifying power was about 100 diameters and that the walking of the observers and men upon the hard road shook the whole apparatus and distracted the observer at the microscope. This is readily understood, but it does not follow that important errors are likely to arise therefrom.

There is one source of error that can not by any means be avoided; that is the possibility of the forward microscope micrometer changing its position while the bar is being removed and carried forward, so that the microscope micrometer becomes the rear instrument. This would afford a source of instrumental error if all the changes were one way, but in a large number of measures it may be assumed that the errors arising from this and the preceding source will be equally possible to increase and to decrease the length of the base.

The principal source of error appears to me to rest in the unknown temperature of the bar, because I can not believe that the indications of the thermometers are to be taken as the actual temperature of the bar at any given time. It is confessed that in some of the measured bases the thermometer showed a change of temperature sooner than the bars.

If we grant that all these sources of error can be corrected for, the method has at first glance a very satisfying and alluring effect upon the observer, arising from—

(1) Accuracy in transferring from the base station to the bar trace and *vice versa.*

(2) The accuracy of alignment of the bar.

(3) The accuracy of measurement of the "traces" under high power.

And yet the more I have thought the matter over and studied the manner and completeness of preparation, the elaborateness and complexity of instrumental outfit (some special points depending wholly upon the instrument maker); the slowness of the operations and the large personnel; the shortness of the base and the necessarily rapid loss of value before the triangles of large extent are reached, and the exposed condition of the bar, the less attractive the method becomes.

In one essential the method is not readily applicable in the territory of the United States, where the cost of preparing the line would be excessive and its firmness and stability could never reach that of the European roadway, freed from traffic by military authority.

In discussing with members of the Geodetic Association the method by which the Coast Survey has measured the Yolo and Los Angeles bases, I endeavored to elicit from them their claims for the practical advantages of the Ibañez and Brünner bars. None of the claims were of sufficient value to satisfy me that such apparatus could have been used to measure either the Yolo or Los Angeles bases three times in less than one year of field operations. On the long bridges and crossing the railroads the method would have been very expensive and tedious; trains would have been held up and the excessive grades would have been very severe.

One strong objection made to the method of the Coast Survey was in the Mudge contact slide and the lowness of the power used in making the coincidences thereon; and it seemed to some of the delegates impossible that good results should come from such relative coarseness of index and slide traces and lowness of power, and especially when the measurements of a base were conducted with such rapidity as one hundred five-metre bars in ninety-six minutes over unfavorable ground. and at grades reaching 5°, and frequently with adjoining bars on large reverse grades. They objected to the idea which I have insisted upon, of a single bar and mercurial thermometers, but the non-conducting means I used to cover the bars was a novelty to them, and they could not gainsay the facts of observation.

Notwithstanding many drawbacks of detail, the merits of the Coast and Geodetic Survey *method* of working come to the front with strong practical claims, and the more especially as certain details of instrument and work are susceptible of vast improvement. Moreover, the effect upon the extended schemes of triangulation in the United States has very decided advantages in our ability to multiply the number of bases and present results obtained under different climatic, physical, and instrumental conditions.

In the very important matter of determining the temperature of the bar or bars at the time of the base measurement, I think the conditions adopted with the single metal bar and thermometers (thereby really introducing two metals) are unfavorable for accuracy on account of the direct exposure of the bar itself to the atmosphere and the doubtful contact of the thermometers therewith; and also the insufficiency of any such relation of the thermometers to the metal to determine its mean temperature. With the Brünner double metal type the exposure is a drawback, and the rates of receiving and losing heat by the two metals must be determined for each compound bar; (it must be confessed that our compound bar, steel and zinc, is a failure; zinc should never have been used).

There is another drawback in the use of the open bar in the handling by men and the irregular approach of their bodies to the bar.

To avoid even the open exposure of the wooden beams carrying our bars, my experience first led me to cover the standard field bar with blanketing, steam-felting and canvas, on the Yolo base. This retarded changes of temperature very effectively, and profiting by this experience, on the Los Angeles base I covered the measuring bars and the field standard bar in a similar manner, with good results. I proposed to Superintendent Thorn to still further retard changes of temperature by putting more non-conducting material closer to the bars. As now covered, the ordinary changes of temperature occurring under the movable tent cover during the measurements, do not reach the thermometers near the bars for at least two hours. With the proposed protection I

think changes will be retarded three or more hours. This retardation will be such that supposing measurements to commence at sunrise, the temperature of the bars will decrease for three or four hours and then rise the rest of the day.

*The temperature of the bar* is not given accurately by the Schott base bar of the Yolo and Los Angeles bases, because the bulbs of the thermometers are not even in contact with any member of the compound bar.

In some way, readily suggested, the bulbs of the thermometers must be brought into contact with the metal of the bar. By means of iron filings this must necessarily be imperfect. I have suggested reservoirs attached directly to the bar, just large enough to receive the bulbs of the thermometers and containing a small amount of mercury, by which all parts of the bulbs of the thermometers are brought into metallic contact with the bar. I would use four thermometers to each bar, to be properly illuminated and read with magnifiers; these thermometers are read more quickly than the Borda scales.

If a hollow rectangular tube should be adopted as a base bar there might easily be arranged four internal reservoirs to hold the thermometers with the metallic contact completed by mercury as above.

The structure of the *beam* for carrying the bar deserves more consideration than has been given to it. I learned at the Bureau of Weights and Measures at Breteuil that the Ibañez base bar had a motion of the upper and vertical member upon the lower and horizontal member which was screwed thereto. The base bar used at the Aarberg base is essentially a ⊥ of iron with side pieces of wood along the lower part of the vertical web.

The former of these arrangements exhibits inherent weakness; the latter indicates that the temperature of all parts of the bar must be somewhat irregular.

The Yolo base beams were particularly faulty because they were made of "seasoned" but a very poor specimen of wood. They were rectangular boxes, 16 feet long by about 5 inches by 3½ inches, and made of ¾-inch pine. In the bottom of each beam was a T-rail of iron, carrying sixteen equidistant rollers, upon which the members of the zinc and steel were free to move if the apparatus was in order.

These beams were found warped when they reached the field at Yolo, and I believe they warped afterwards.

The field standard beam was of the same material and dimensions and was liable to the same warpings.

I have considered that the character of the beams to be used should be thoroughly determined by experiments, as they would be used in the field.

Another thing needed with our bar is the better connection and adjustment of the aligning telescope, which I originally suggested. (Mr. Blair made a claim on behalf of Mr. Hilgard as first proposing the aligning telescope, but I produced my original letters to show my priority.)

I close this report by saying that I have carefully examined the report upon the construction, comparisons, and other operations which have seemed to determine the equations of the new metrical prototypes. It is the official report presented by "le Comité International des Poids et Mesures" to the Conference General, September, 1889.

I have also read the published descriptions of the methods employed at the Conservatoire des Arts et Métiers, after having examined all the apparatus and listened to the explanations of Mr. Tresca.

There is one part of my instructions which I have not had the time or material to fulfill, and that is the history of the Association Géodésique Internationale. Moreover, I think it can only be written with the *life in it* by longer personal association with members who have been through its early years and its later development, and who know the motives that have prompted and guided much of its action. I am satisfied that a compilation from documents would lack the soul that actuates such an organization.

Yours, very respectfully,

GEORGE DAVIDSON,
*Assistant U. S. Coast and Geodetic Survey.*

Prof. T. C. MENDENHALL,
*Superintendent U. S. Coast and Geodetic Survey.*

Blank page retained for pagination

# PROGRESS SKETCHES.

No. 1. SKETCH OF GENERAL PROGRESS (eastern sheet).
No. 2. SKETCH OF GENERAL PROGRESS (western sheet).
No. 3. PARTS OF SECTIONS I AND II. Progress in the New England States, and in the resurveys of Nantucket, Vineyard, and Long Island Sounds.
No. 4. PARTS OF SECTIONS II AND III. Progress between Long Island Sound and Chesapeake Bay, and in New York, Pennsylvania, and Maryland.
No. 5. PARTS OF SECTIONS IV AND V. Progress of surveys and resurveys, coasts of North and South Carolina.
No. 6. PARTS OF SECTIONS IV, V, VIII, AND IX. Triangulation to connect the triangulation of Tennessee with that of northern Georgia. Extension of triangulation from the Atlanta base towards the Gulf Coast.
No. 7. PART OF SECTION VI. Progress on the west coast of Florida from Cape Romano to Key West.
No. 8. PARTS OF SECTIONS VII AND VIII. Progress on the coasts of Florida, Louisiana, and Alabama.
No. 9. PART OF SECTION X. Progress on the coast of California from San Diego to Point Dume.
No. 10. PART OF SECTION X. Progress on the coast of California from Point Sal to Tomales Bay.
No. 11. PARTS OF SECTIONS X AND XI. Progress on the coasts of California and Oregon from Cape Mendocino to Umpquah River.
No. 12. PART OF SECTION XI. Progress on the coasts of Oregon and Washington from Tillamook Bay to the Boundary.
No. 13. PART OF SECTION XII. General chart of Alaska.
No. 14. PARTS OF SECTIONS XIV AND XV. Progress of reconnaissance and triangulation in Wisconsin and Minnesota.
No. 15. PARTS OF SECTIONS III, XIII, XIV, XV, AND XVI. Progress of the Transcontinental triangulation along or near the thirty-ninth parallel from West Virginia to Colorado.
No. 16. PARTS OF SECTIONS X AND XVI. Progress of the Transcontinental triangulation and reconnaissance eastward from the Pacific coast.
No. 17. MAP SHOWING LONGITUDE STATIONS and connections determined by means of the electric telegraph between 1846 and 1889.
No. 18. MAP SHOWING POSITION of magnetic stations occupied between 1844 and 1889.

# ILLUSTRATIONS.

No. 19. THE OPTICAL BEAM-COMPASS COMPARATOR. [To Appendix No. 6, to face page 180.]
Also, to APPENDIX No. 6. Two relief plates printed with text, pp. 182 and 183.
NEW PORTABLE TRANSIT FOR LONGITUDE WORK. [To Appendix No. 9, page 215.]
No. 20. MARKINGS OF ENDS OF PRIMARY BASE LINE, Los Angeles, California. [To Appendix No. 10, to face page 220.]
No. 21. MAP SHOWING THE GENERAL location of the Los Angeles base line and its connection with the main triangulation. [To Appendix No. 10, end of volume.]
No. 22. PROFILE OF THE LOS ANGELES BASE LINE. [To Appendix No. 10, end of volume.]
No. 23. LOS ANGELES BASE LINE. Sketch showing movement of party. [To Appendix No. 10, to face page 224.]
No. 24. DISTURBED ISO-MAGNETIC CURVES. [To Appendix No. 11, to face page 236.]
No. 25. ISOGONIC CHART OF THE UNITED STATES for the epoch 1890. [To Appendix No. 11, end of volume.]
No. 26. ISOGONIC CHART OF ALASKA and adjacent regions for the epoch 1890. [To Appendix No. 11, end of volume.]

No. 27. MAGNETIC MERIDIANS OF THE UNITED STATES for January, 1890. [To Appendix No. 11, end of volume.]

No. 28. COMPARISON OF SURVEYS ON CAPE COD, showing changes in shore-line, 1848 to 1888. [To Appendix No. 12, end of volume.]

No. 29. CROSS-SECTIONS OF THE SHORE OF CAPE COD between Chatham and the Highland light-house. [To Appendix No. 13, end of volume.]

No. 30. SKETCH SHOWING RECENT changes in the south inlet into Edgartown Harbor, Massachusetts. [To Appendix No. 14, end of volume.]

Illustrations Nos. 31 to 50 to Appendix No. 16, Gulf Stream explorations, follow at end of volume in numerical order].

No. 31. CURVES OF OBSERVATION of currents in the Equatorial Stream.

No. 32. CURVES OF OBSERVATION of currents in the Santa Lucia and Martinique Passages.

No. 33. CURVES OF OBSERVATION of currents in the Dominica, Guadaloupe, and Antigua Passages and outside Desirade Island.

No. 34. CURVES OF OBSERVATION of currents outside of Santa Lucia Passage and in the Anegada Passage.

No. 35. CURVES OF OBSERVATION of currents in the Windward Passage, in Old Bahama Channel, and outside the Bahama Islands.

No. 36. VERTICAL CURRENT AND TEMPERATURE CURVES. Gulf Stream currents, steamer *Blake*, 1888–1889.

No. 37. GULF STREAM CURRENTS, steamer *Blake*, 1889. Anegada Passage, Santa Lucia Passage, Equatorial current.

No. 38. GULF STREAM CURRENTS, steamer *Blake*, 1889. New Granada and south of Curaçao.

No. 39. GULF STREAM CURRENTS, steamer *Blake*, 1889. Mona Passage, and southwest of Jamaica Channel.

No. 40. GULF STREAM CURRENTS, steamer *Blake*, 1889. Windward Passage—Old Bahama Channel, and St. Nicholas and Santaren Channels.

No. 41. GULF STREAM CURRENTS, steamer *Blake*, 1889. Off Fowey Rocks, between Bahama and Hatteras.

No. 42. GULF STREAM CURRENTS, Section F. Off Cape Hatteras, steamer *Blake*, 1887–1889.

No. 43. CURRENT DIRECTIONS, steamer *Blake*, 1888.

No. 44. CURRENT DIRECTIONS, steamer *Blake*, 1889.

No. 45. CURRENT DIRECTIONS, steamer *Blake*, 1888.

No. 46. CURRENT DIRECTIONS, steamer *Blake*, 1889.

No. 47. CURRENT DIRECTIONS, steamer *Blake*, 1889.

No. 48. CURRENT DIRECTIONS, steamer *Blake*, 1888.

No. 49. CURRENT DIRECTIONS, steamer *Blake*, 1888–1889.

No. 50. CURRENT DIRECTIONS, steamer *Blake*, 1888–1889.

# National Oceanic and Atmospheric Administration

## Annual Report of the Superintendent of the Coast Survey

## Please Note:

This project currently includes the imaging of the full text of each volume up to the "List of Sketches" (maps) at the end. Future online links, by the National Ocean Service, located on the Historical Map and Chart Project webpage (http://historicals.ncd.noaa.gov/historicals/histmap.asp) will includes these images.

NOAA Central Library
1315 East-West Highway
Silver Spring, Maryland 20910