REPORT OF THE SUPERINTENDENT

OF THE

U. S. COAST AND GEODETIC SURVEY

SHOWING

THE PROGRESS OF THE WORK

DURING THE

FISCAL YEAR ENDING WITH

JUNE, 1897.

Rarebook
QB
296
.U5
1898

WASHINGTON:
GOVERNMENT PRINTING OFFICE.
1898.

National Oceanic and Atmospheric Administration

Annual Report of the Superintendent of the Coast Survey

ERRATA NOTICE

One or more conditions of the original document may affect the quality of the image, such as:

Discolored pages
Faded or light ink
Binding intrudes into the text

This has been a co-operative project between the NOAA Central Library, the Office of Coast Survey and the National Geodetic Survey. To view the original document, please contact the NOAA Central Library in Silver Spring, MD at (301) 713-2607 x124 or www.reference@nodc.noaa.gov.

Please Note:
This project currently includes the imaging of the full text of each volume up to the "List of Sketches" (maps) at the end. Future online links, by the National Ocean Service, located on the Historical Map and Chart Project webpage (http://historicals.ncd.noaa.gov/historicals/histmap.asp) will includes these images.

LASON
Imaging Contractor
12200 Kiln Court
Beltsville, MD 20704-1387
January 13, 2003

ERRATA.

Page 344, line 8, for "$\pi\sqrt{\frac{\lambda}{g}}$," read "$2\pi\sqrt{\frac{\lambda}{g}}$."

Page 348, line 5, after "η," insert "generally."

Page 348, line 6, after the word "zero," insert "wherever lx is an odd multiple of 90°."

Page 358, line 14, for "the wave-form travels," read "two wave forms travel."

Page 358, line 15, delete "twice during."

Page 367, immediately preceding expression (128), delete period.

Page 430, third line from bottom, for "altitudes," read "latitudes."

Page 437, footnote, for "K_2," read "K_1."

LETTER

FROM

THE SECRETARY OF THE TREASURY,

TRANSMITTING

The report of the Superintendent of the United States Coast and Geodetic Survey, stating progress made in that work during the fiscal year ending June 30, 1897.

TREASURY DEPARTMENT, OFFICE OF THE SECRETARY,
Washington, D. C., December 10, 1897.

SIR: In compliance with the requirements of section 4690, Revised Statutes, I have the honor to transmit herewith, for the information of Congress, the Report of the Superintendent of the Coast and Geodetic Survey, showing the progress made in that work during the fiscal year ended June 30, 1897, and accompanied by maps illustrating the general advance in the operations of the Survey up to that date.

Respectfully yours,

LYMAN J. GAGE,
Secretary.

The VICE-PRESIDENT OF THE UNITED STATES
AND PRESIDENT OF THE SENATE.

Blank page retained for pagination

LETTER OF TRANSMISSION.

UNITED STATES COAST AND GEODETIC SURVEY,
Washington, D. C., December 8, 1897.

SIR: In conformity with law and the regulations of the Treasury Department, I have the honor to submit herewith, for transmission to Congress, the Annual Report of my predecessor, Gen. W. W. Duffield, on the progress of the Coast and Geodetic Survey for the fiscal year ended June 30, 1897.

Very respectfully, yours,

HENRY S. PRITCHETT,
Superintendent.

Hon. LYMAN J. GAGE,
Secretary of the Treasury.

Blank page retained for pagination

REPORT OF THE SUPERINTENDENT

OF THE

U. S. COAST AND GEODETIC SURVEY

FOR THE FISCAL YEAR ENDING JUNE 30, 1897.

IN TWO PARTS.

PARTS I AND II.

PREFATORY NOTE.

In this report of the fiscal year 1897 the division into two parts has been retained, but both parts are published in one volume.

Part I contains the historical portion. It presents abstracts of progress in field and office work, gives estimates for future work, and a statement of expenditures during the fiscal year.

The usual maps and progress sketches, showing in detail the localities and scope of the field operations, accompany the report.

Part II contains the Appendices which relate to the methods, discussions, and results of the Survey, with such illustrations as are required.

The illustrations accompany the Appendices to which they respectively belong.

Blank page retained for pagination

ABSTRACT OF CONTENTS OF REPORT.

PARTS I AND II.

Letter from the Secretary of the Treasury, transmitting report to Congress, p. III.
Letter of transmission from the Superintendent to the Secretary of the Treasury, p. V.
Prefatory note, p. VII.
Abstract of contents of Report—Parts I and II, p. IX.
Titles of appendices, p. XI.
List of progress sketches, p. XIII.
List of illustrations, p. 155.
Alphabetical index, p. XV.

INTRODUCTORY STATEMENT relating to the progress of the several branches of the work of the Survey during the fiscal year 1897, and referring to some operations of special importance, p. 1. Special assignments, p. 2. Office work, p. 2. Office of Standard Weights and Measures, p. 2. Arrangement of this Report, p. 3. Geographical classification of localities of field work, p. 3. Special operations, p. 3.

GENERAL STATEMENT OF PROGRESS: Field work in the Eastern Division (States east of the Mississippi River), p. 4; in the Middle Division (States and Territories between the Mississippi River and the Rocky Mountains), p. 4; in the Western Division (States and Territories west of the Rocky Mountains), p. 4; in the Division of Alaska, p. 5; in special operations, p. 5. Office work, p. 5. Notices to mariners, charts, and other publications, p. 5. Bulletins, p. 5.

EXPLANATION OF ESTIMATES for the fiscal year 1899, p. 6. Estimates in detail for continuing the work of the Coast and Geodetic Survey and Office of Construction of Standard Weights and Measures for the fiscal year 1899, pp. 6–10.

ABSTRACTS OF REPORTS FROM FIELD PARTIES, FISCAL YEAR 1897, pp. 11–51.

Eastern Division.—States east of the Mississippi River: Maine, New Hampshire, Vermont, Massachusetts, Rhode Island, Connecticut, New York, New Jersey, Pennsylvania, Delaware, Maryland, District of Columbia, Virginia, North Carolina, South Carolina, Georgia, Florida, Alabama, Mississippi, Michigan, Wisconsin, Ohio, Indiana, Illinois, West Virginia, Kentucky, and Tennessee, pp. 11–26. Connection of Mount Royal, near Montreal, Canada, with the primary triangulation of Vermont and New York, p. 11. Hydrography on the coast of Massachusetts between Gloucester and Manchester, p. 12. Continuation of the hydrographic resurvey of Buzzards Bay, Massachusetts, p. 12. Continuation of the topograpical resurvey of Buzzards Bay, Massachusetts, p. 13. Topographical survey of Naushon Island, Massachusetts, p. 14. Special hydrographic examinations and surveys in Nantucket and Vineyard Sounds, and on the coast of Rhode Island, p. 14. Topographical survey of Marthas Vineyard, Massachusetts, p. 15. Determination of the geographical positions of light-houses in Narragansett Bay and Providence River, Rhode Island, p. 15. Telegraphic longitude determinations and magnetic observations at Albany, N. Y., Cambridge, Mass., and Montreal, Canada, p. 15. Continuation of the hydrographic surveys to the southward of Block Island Sound and off Montauk Point, and special examinations at various points, p. 16. Continuation of the topographical resurvey of the south shores of Long Island, New York, p. 17. Continuation of the tidal record and the automatic tidal indicator at Fort Hamilton, New York Harbor, p. 17. Extension of the transcontinental arc eastward to Capes May and Henlopen, p. 17. Continuation of the tidal record and the automatic tidal indicator at Reedy Island, Delaware River, p. 18. Telegraphic determination of the difference of longitude between Washington, D. C., and Dover, Del.; also latitude and magnetic determinations, p. 18. Continuation of the tidal record at the tide-gauge station at the United States Navy-Yard, Washington, D. C., p. 19. Resurvey of Chesapeake Bay and tributaries; triangulation of Patapsco River and upper part of bay from Kent Island to Pooles Island, p. 19. Hydrography in the vicinity of Baltimore Harbor entrance, p. 20. Triangulation and topography of Chester River, Maryland, p. 20. Resumption of the topographical survey of Chester River, Maryland, in the spring of 1897, p. 21. Triangulation from the mouth of the Potomac River northward, p. 21. Hydrographic survey of the southern branch of Elizabeth River, erection and determination of signals at Baltimore entrance, and current observations at various points, p. 21. Triangulation of southern portion of Chesapeake Bay, p. 22. Latitude and magnetic determinations at Round Hill and Leesburg, Va., p. 22. Magnetic determinations and establishment of meridian lines at various points in the State of Virginia, p. 22. Continuation and completion of the tidal record at Port Royal, S. C., p. 23. Hydrographic resurvey of Savannah River entrance p. 23. Resurvey of Brunswick Bar, Georgia, p. 23. Establishment of a tidal station at Fernandina, Fla., p. 23. Geodetic connection of the Atlantic and Gulf coasts of Florida, p. 24. Continuation of the oblique arc in Alabama, p. 25. Precise leveling in Mississippi, Vicksburg to Meridian, p. 25.

Middle Division.—States and Territories between the Mississippi River and the Rocky Mountains: Minnesota, North Dakota, South Dakota, Iowa, Nebraska, Missouri, Kansas, Arkansas, Indian Territory, Oklahoma Territory, Louisiana, and Texas, pp. 27–32. Survey of Lake Pontchartrain, Louisiana: Triangulation, topography, and hydrography, p. 27. Hydrographic survey at the mouth of Brazos River, Texas, p. 28. Magnetic observations at various points in the Central and Northwestern States, p. 28. Continuation of the transcontinental line of precise levels in Kansas, p. 28. Resumption of the transcontinental line of precise levels in Kansas, in the spring of 1897, p. 29. Transcontinental geodetic work: Measurement of the "Salina Base," Kansas, p. 29. Reconnaissance in Nebraska and northern Kansas, p. 30. Resumption of the reconnaissance in Nebraska and northern Kansas in the spring of 1897, p. 31. Transcontinental triangulation: Measurement of "Versailles Base," Missouri, p. 31.

Western Division.—States and Territories between the Rocky Mountains and the Pacific: California, Oregon, Washington, Idaho, Montana, Wyoming, Nevada, Utah, Colorado, Arizona Territory, and New Mexico Territory, pp. 33–42. Continuation of the topographical resurvey of San Francisco Bay and Harbor, p. 33. Continuation of the hydrographic resurvey of San Francisco Bay and Harbor, p. 34. Continuation of the tidal record at the Sausalito (San Francisco Bay) tidal station, p. 35. Determination of the latitude and longitude of the new "Presidio Astronomical Station," San Francisco, Cal., p. 35. Magnetic determinations in the State of California, p. 35. Magnetic observations at eighteen stations in southern California, p. 36. Triangulation in southern California, p. 36. Examination of the sea approaches to the mouth of the Coquille River, Oregon, p. 37. Continuation of the survey of Washington Sound, Washington, triangulation and topography, p. 37. Geodetic work in Utah: Measurement of the Salt Lake Base Line, p. 37. Reconnaissance and triangulation in the States of Utah, Nevada, and Idaho, p. 38. Magnetic observations in the State of Montana, p. 38.

Division of Alaska, including the coasts of Alaska which border on the North Pacific Ocean, on Bering Sea, and on the Arctic Ocean; also the inlets, sounds, bays, and rivers, pp. 39–42. Continuation of hydrographic and general surveys in southeast Alaska, p, 39. Chronometric determination of differences of longitude in Alaska; also latitude and magnetic determinations, p. 40. Resumption of hydrographic and general surveys in southeast Alaska in the spring of 1897, p. 40. Survey of the Pribilof Islands, Bering Sea, Alaska, p. 41.

Special operations, fiscal year 1897, pp. 43–51. Magnetic and gravity observations at various points in British North America and Greenland: The Greenland Expedition, p. 43. Latitude determinations at Dover, Del., and Round Hill and Leesburg, Va., with a view to the selection of stations for the International Latitude Service, p. 44. Laying out of a speed trial course for naval vessels in Chesapeake Bay, p. 45. Examination of a portion of the boundary line between Spartanburg and Greenville Counties, S. C., p. 46. Resurvey of Brunswick Bar, Georgia, p. 47. Hydrographic survey to determine the value of improvements at the mouth of the Brazos River, Texas, p. 48. Resurvey of the boundary line between the United States and Mexico, p. 49. Laying out of a speed trial course in San Francisco Bay, p. 49. Hydrographic examination of San Pedro and Santa Monica bays, Cal., p. 49. Seal investigations at Guadelupe Island, northwest coast of Mexico, p. 50. Examination of the approaches to the Port Orchard Naval Station, p. 50. Mount St. Elias exploring expedition, p. 50. Mississippi River Commission, p. 51.

ABSTRACT OF OFFICE ANNUAL REPORTS, fiscal year 1897, pp. 52–57. Abstract of the annual report of the Assistant in Charge of the Office, p. 52. Abstract of the annual report of the hydrographic inspector, p. 53. Abstract of the annual report of the Assistant in Charge of the Office of Standard Weights and Measures, p. 55 Superintendent's office, p. 55. Disbursing office, p. 55. Suboffice, San Francisco, p. 56. Obituary, p. 56.

FIELD AND OFFICE DETAILS—TABULAR STATEMENTS, pp. 59–148. Table No. 1: Distribution of the field parties of the Coast and Geodetic Survey upon the Atlantic, Gulf of Mexico, and Pacific coasts, and in the interior of the United States during the fiscal year ending June 30, 1897, pp. 61–65. Table No. 2: Statistics of field and office work of the Coast and Geodetic Survey for the fiscal year 1897, and total to June 30, 1897, pp. 66–68. Table No. 3: Information furnished to Departments of the Government in reply to special requests, and to individuals and institutions upon application, during the fiscal year ending June 30, 1897, pp. 69–79.

OFFICE ANNUAL REPORTS, pp. 80–148. Office Report No. 1: Report of the Assistant in Charge of the Office for the fiscal year ending June 30, 1897, p. 80; annual report of the computing division, p. 81; annual report of the tidal division, p. 83; annual report of the drawing and engraving division, p. 86; annual report of the chart division, p. 90; annual report of the miscellaneous division, p. 92; annual report of the instrument division, p. 95; annual report of the library and archives division, p. 99. Office Report No. 2: Report of the hydrographic inspector for the fiscal year 1897, including annual reports of the hydrographic division and the Coast Pilot party, pp. 102–119. Office Report No. 3: Report of the disbursing agent for the fiscal year ending June 30, 1897, pp. 120–143. Office Report No. 4: Report of the Assistant in Charge of the Office of Standard Weights and Measures for the fiscal year ending June 30, 1897, pp. 144–148; abstract of verifications, determinations, standardizations, etc., made by the Office of Standard Weights and Measures during the fiscal year 1897, p. 145.

APPENDICES relating to the methods, discussions, and results of the Coast and Geodetic Survey, pp. 149–774. Titles of appendices, list of, p. 153. List of illustrations, p. 155. List of progress sketches, illustrating Part I, p. 149. Progress sketches, Nos. 1 to 15, at end of Part I.

TITLES OF APPENDICES.

Page.

No. 1.—Distribution of the magnetic dip and magnetic intensity in the United States for the epoch January, 1890. By C. A. Schott, Assistant. (Second edition, with 3 charts) 157

No. 2.—The telegraphic longitude net of the United States and its connection with that of Europe, 1866–1896. By C. A. Schott, Assistant..... 197

No. 3.—Resulting longitudes of Kadiak, Unalaska, and Unga, as determined chronometrically for Sitka in 1896, by the party under the charge of Fremont Morse, Assistant. Reported by C. A. Schott, Assistant..... 259

No. 4.—Resulting heights from spirit leveling between Holliday and Salina, Kans., from observations by I. Winston, Assistant, between July 11 and October 28, 1895. Submitted for publication by C. A. Schott, Assistant, November 13, 1897..... 269

No. 5.—Results of magnetic observations made in connection with the Greenland Expedition of 1896, under the charge of Prof. A. E. Burbon. By G. R. Putnam, Assistant..... 285

No. 6.—Results of pendulum observations made in 1895 and 1896. By G. R. Putnam, Assistant..... 297

No. 7.—Notes relating to self-registering tide gauges as used by the United States Coast and Geodetic Survey. By J. F. Pratt, Assistant..... 313

No. 8.—Manual of Tides, Part I. Introduction, and historical treatment of the subject. By Rollin A. Harris..... 319

No. 9.—Manual of Tides, Part II. Tidal observations, equilibrium theory, and harmonic analysis. By Rollin A. Harris..... 471

No. 10.—Photo-topographic methods and instruments. By J. A. Flemer, Assistant..... 619

No. 11.—The new duplex base apparatus of the Coast and Geodetic Survey. By William Eimbeck, Assistant. 737

No. 12.—Report on the measurement of the Salt Lake Base Line. By William Eimbeck, Assistant..... 753

Blank page retained for pagination

LIST OF PROGRESS SKETCHES.

[Bound at end of Part I.]

---

1. Sketch of general progress (eastern sheet).
2. Sketch of general progress (western sheet).
3. General chart of Alaska.
4. Sketch showing the progress of surveys in southeastern Alaska to June 30, 1897.
5. Map showing longitude stations and connections determined by electric telegraph between 1846 and June 30, 1897.
6. Map showing positions of magnetic stations occupied between 1844 and June 30, 1897.
7. Map showing lines of geodetic leveling run, and positions of gravity and tide stations to June 30, 1897.
8. Map showing the distribution of the principal astronomic stations occupied by the Coast and Geodetic Survey for latitude, longitude, and azimuth, to June 30, 1897.
9. Sketch showing extension of primary triangulation to Montreal, and resurveys of the coast east of Hudson River, to June 30, 1897.
10. Sketch showing extension of primary triangulation along the twenty-ninth parallel to the Capes of the Delaware and resurveys between Hudson River and Cape Florida, to June 30, 1897.
11. Sketch showing progress of primary triangulation from Atlanta Base to the Gulf of Mexico, with subsketches of Lake Pontchartrain and Brazos River.
12. Sketch of the Pacific coast from San Diego to Point Conception, showing progress of primary triangulation in vicinity of Los Angeles Base and resurvey of Santa Monica and San Pedro Harbor, with subsketches of Puget Sound and San Francisco Bay.
13. Sketch showing progress of triangulation across the peninsula of Florida.
14. Sketch showing triangulation in Kansas and Nebraska, with subsketches showing Salt Lake Base and triangulation in Missouri.
15. Triangulation sketch of St. Paul Island, Alaska.

Blank page retained for pagination

ALPHABETICAL INDEX.

A.

ABSTRACT OF CONTENTS OF REPORT, p. IX.
ABSTRACTS OF REPORTS FROM FIELD PARTIES. Eastern Division, pp. 11-26. Middle Division, pp. 21-32. Western Division, pp. 33-38. Division of Alaska, pp. 39-42. Special operations, pp. 43-51.
ABSTRACT OF ANNUAL REPORT OF ASSISTANT IN CHARGE OF OFFICE, p. 52.
ABSTRACT OF ANNUAL REPORT OF HYDROGRAPHIC INSPECTOR, pp. 53, 54.
ABSTRACT OF ANNUAL REPORT OF DISBURSING AGENT, p. 55.
ABSTRACT OF ANNUAL REPORT OF ASSISTANT IN CHARGE OF STANDARD WEIGHTS AND MEASURES, p. 55.
ACCOMAC COURT-HOUSE. Magnetic determination at, p. 23.
ALABAMA, STATE OF, EASTERN DIVISION, p. 11.
ALASKA, ABSTRACTS OF REPORTS OF FIELD PARTIES, pp. 39-42.
ALASKA. Surveys in southeast part of, p. 40.
ALASKA COMMERCIAL COMPANY, p. 41.
ALASKA, DIVISION OF, p. 39.
ALGA STRAIT, ALASKA, p. 39.
ALLAN, W. S., p. 40.
ANDERSEN, A., p. 13.
ANDERSEN, WILLIAM, TIDAL OBSERVER, p. 48.
ANNUAL REPORTS OF SUPERINTENDENT. Distribution of, during year, p. 93. Letters transmitting, pp. III, V.
ANTELOPE ISLAND, UTAH. Primary station, p. 37.
APPENDICES. For list of, see p. 153.
APPROPRIATIONS AND EXPENSES. Statement of, p. 143.
ARCHIVES DIVISION, LIBRARY AND. Annual report of, pp. 99-101.
ARIZONA, TERRITORY OF, WESTERN DIVISION, p. 33.
ARKANSAS, STATE OF, MIDDLE DIVISION, p. 27.
ARRANGEMENT OF REPORT, p. 3.
ASSISTANT IN CHARGE OF OFFICE. Annual report of, pp. 80-98.
ASTRONOMICAL OBSERVATIONS. In Kansas, p. 29. In California, p. 36. In Alaska, p. 42.
AZIMUTH. Observed in Kansas, p. 29. In California, p. 36.

B.

BACHE, STEAMER, pp. 13, 23, 47, 102, 103, 104, 113.
BACON, HARLOW, p. 86.
BAILEY, A. H., pp. 58, 89.
BALDWIN, A. L., ASSISTANT. Geodetic connection of Atlantic and Gulf coasts of Florida, p. 24. Establishment of tidal station at Fernandina, Florida, pp. 24, 25. Salina base, p. 30. Versailles base, Missouri, pp. 31, 32. Hydrographic survey of mouth of Brazos River, Texas, p. 48. Reference to, p. 28.
BALLARD, H. S., TIDAL OBSERVER, pp. 35, 56, 84
BALTIMORE HARBOR. Hydrography of entrance to, pp. 20-22.
BARTLE, R. F., & CO., p. 89.
BASE BAR COMPARISONS, pp. 38.
BASE LINES. At Montreal, p. 16. In Kansas, p. 29. In Nebraska, p. 31. At Versailles, Missouri, p. 31. At mouths of Indian River, Alaska, pp. 40, 42.
BAYLOR, J. B., ASSISTANT. Resurvey of Chesapeake Bay, p. 22. Magnetic determination and the establishment of meridian lines in various parts of Virginia, pp. 22, 23. Reference to, pp. 22, 43, 52, 82, 85, 106.
BEAR, REVENUE-CUTTER, p. 42.
BENSON, W. S., LIEUT., U. S. N., ASSISTANT. Resumption of hydrographic surveys to the southward of Block Island Sound and of Montauk Point, p. 16. Reference to, p. 105.
BILBY, JASPER, pp. 17, 25.
BLAKE, STEAMER, pp. 12, 20, 45, 46, 48, 102, 103, 107, 113.
BLAKENEY, T. J., p. 37.
BLANDIN, JOHN J., LIEUT., U. S. N., pp. 14, 16, 23, 105, 106.
BLISS, D. S., p. 85.
BLOCK ISLAND. Hydrographic survey of, p. 16.
BONITA CHANNEL, p. 34.
BOUNDARY COMMISSION, INTERNATIONAL, UNITED STATES AND MEXICO, p. 5.
BOUNDARY LINE BETWEEN UNITED STATES AND MEXICO. Resurvey of, p. 49.
BOUNDARY LINE SURVEY IN SOUTH CAROLINA, p. 46.
BOUTELLE, JOHN B., p. 81.
BOWIE, WILLIAM, pp. 13, 26, 52, 82.
BRADFORD, GERSHOM, ASSISTANT. Report of Chart Division by, pp. 90, 92. References to, pp. 53, 92.
BRADSHAW, G. B., ENSIGN, U. S. N., p. 40.
BRAID, ANDREW, ASSISTANT. In charge of office of weights and measures and editing annual report, pp. 55, 145.
BRAND, C. A., ENSIGN, U. S. N., p. 16.
BRAZOS RIVER, TEXAS. Improvements at mouth of, 28, 48, 49.
BRAZOS RIVER CHANNEL AND DOCK COMPANY, pp. 48, 49.
BRINKER, R. E., p. 14.
BRITISH NORTH AMERICA. Magnetic and gravity observations at different parts of, p. 43.
BROWN, JOHN H., p. 95.
BRUNSWICK BAR, GEORGIA. Resurvey of, pp. 23, 47, 48.
BRYANT, NEIL, pp. 90, 91.
BRYANT, HENRY G., pp. 50, 51.
BUCKINGHAM, CHARLES W., p. 89.
BULLETINS. Reference to, pp. 5, 93.
BURTON, PROF. A. E., pp. 43, 44.
BUTLER, WILLIAM H., p. 101.
BUZZARDS BAY. Hydrographic resurvey of, pp. 12, 13.

C.

CALIBOGUE SOUND. Entrance to, surveyed, p. 23.
CALIFORNIA, STATE OF, WESTERN DIVISION, p. 33.
CAMERDEN, A. B., p. 22.
CARLISLE, J. J., p. 14.
CARY, C., p. 12.
CESTISSIMA ROCK, p. 34.
CHARLESTON, WASH., p. 50.
CHART DIVISION. Reference to, p. 80. Annual report of, pp. 90-92.
CHARTS. Engraved during the year, p. 88. Comparison of issues of, p. 91. New, issued, p. 91. Receipts, issues, and general distribution of, p. 92.
CHESAPEAKE BAY. Reference to, p. 12. Resurvey of, pp. 19-22. Speed trial course in, p. 44.
CHESTER RIVER, MARYLAND. Triangulation and topography of, pp. 20, 21.
CHILTON, WILLIAM B., p. 55.
CHRONOMETRIC LONGITUDES. In Alaska, p. 40.
CITY OF TOPEKA, STEAMER, pp. 41, 51, 108.
CLARK, JOSEPH A., p. 96.
CLARK, WALTER Y., p. 95.
CLARVOE, G. W., p. 96.
CLAY, F. W., pp. 82, 85.
CLOVER PASSAGE. Investigation of reported rocks and shoals at, p. 39.

CLIFT, J. W., p. 22.
COAST PILOT. Collection of information for, p. 54.
COAST PILOT PARTY. Reference to, pp. 54, 113. Annual report of, pp. 118, 119.
COLBY, H. G. O., LIEUT. COMMANDER, U. S. N. Hydrographic inspector, pp. 53, 117.
COLORADO, STATE OF, WESTERN DIVISION, p. 33.
COMPUTING DIVISION. Annual report of, pp. 81–83.
CONARD, CLARENCE, p. 14.
CONN, WILLIAM M., p. 89.
CONNECTICUT, STATE OF, EASTERN DIVISION, p. 11.
COQUILLE RIVER, OREGON, pp. 33, 37.
CORPS OF ENGINEERS, U. S. A., p. 48.
CORTHELL, E. L., p. 105.
COSMOS, STEAM LAUNCH, p. 107.
COTTMAN, THOMAS E., p. 21.
COURTENAY, EDWARD H., pp. 81, 100.
COURTIS, FRANK, LIEUT. COMMANDER, U. S. N., p. 108.
CRAIG, JOHN, pp. 13, 48.
CRAWFORD, G., p. 89.
CREW, C. C., p. 29.
CRUTCHFIELD, R. B., pp. 95, 145.
CURRENT OBSERVATIONS. In Chesapeake Bay, pp. 21, 22. In Southeast Alaska, p. 39. Brazos River, Texas, p. 48. Seymour Narrows, British Columbia, p. 84.

D.

DARNALL, C. N., p. 96.
DAVIS, A. H., ENSIGN, U. S. N., pp. 13, 47.
DAVIS, W. H., p. 88.
DEETZ, C. H., p. 86.
DELAWARE, STATE OF, EASTERN DIVISION, p. 11.
DENIS, VICENTE, p. 56.
DENSON, H. C., AID, pp. 17, 23, 24, 38.
DERICKSON, R. B., pp. 19, 21, 45, 46, 103.
DE VALIN, CHARLES M., PASSED ASSISTANT SURGEON, U. S. N., p. 12.
DEXTER, PAUL W., pp. 89, 90.
DICKINS, E. F., ASSISTANT. Triangulation in San Francisco and San Pablo bays, p. 33. Determining range stations, p. 34. Trial course, pp. 34, 49. Reference to, p 56.
DISBURSING AGENT. Report of, pp. 120-143.
DISTRICT OF COLUMBIA, EASTERN DIVISION, p. 11.
DIVISION OF ALASKA, p. 5.
DOLPHIN, U. S. STEAMER, p. 106.
DONN, F. C., p. 118.
DOOLITTLE, MYRICK H., p. 81.
DORA, STEAMER, pp. 41, 51.
DORSEY, J. A., p. 95.
DOUGLAS, WM. S., CAPTAIN, p. 12.
DOVER, DEL. Telegraphic longitude of, p. 18.
DRAWING AND ENGRAVING DIVISION. Annual report of, pp. 86–90.
DRAWING, STATISTICS OF, pp. 87, 88.
DRUM, JOHN W., p. 95.
DUFFIELD, WILLIAM WARD, SUPERINTENDENT, pp. 39, 55, 90, 107.
DUFFIELD, WILL WARD, ASSISTANT. In charge of Drawing and Engraving Division, pp. 52, 90. Survey of Pribilof Islands, p. 42.
DUNLAP, A., LIEUT. COMMANDER, U. S. N., ASSISTANT. In command of steamer Blake, pp. 12, 20, 45, 46, 102, 103, 107.
DUNN, J. L., PAY YEOMAN, U. S. N., pp. 13, 48.
DUTCH HARBOR, ALASKA, p. 41.
DYER HORACE, p. 95.

E.

EAGRE, SCHOONER, pp. 12, 104, 113.
EARNEST, SCHOONER, p. 108.
EASTERN DIVISION, STATES EAST OF THE MISSISSIPPI RIVER, pp. 4, 11
EATON, D. W., p. 32.
EDGAR, W. A., LIEUT. U. S. N., p. 12.
EDMONDS, F. W., pp. 33, 34, 56.
EIMBECK, WILLIAM, ASSISTANT. Salt Lake base line, pp. 37, 38.
ELECTROTYPING, STATISTICS OF, p. 88.
ELIZABETH RIVER. Hydrographic survey of, p. 21.
ELLIS, E. P., p. 86.
ENDEAVOR, STEAMER, pp. 14, 16, 23, 105, 106, 113.
ENGINEERS, U. S. A., CORPS OF, pp. 25, 84, 106.
ENGRAVING, STATISTICS OF, p. 88.
EHRHARD, PAUL F., p. 32.
ERICHSEN, PAUL VON, p. 86.
ESTIMATES, EXPLANATION OF, pp. 6-10.
ESTIMATES FOR 1899. Field expenses, p. 7. International Geodetic Association, p. 8. Repairs and maintenance of vessels, p. 8. Field officers, p. 8. Office force, pp. 8, 9. Office expenses, p. 9. Printing and binding, p. 10. Office of construction of standard weights and measures, p. 10. Publishing observations, p. 9.
EXPENDITURES since last report on account of the appropriations for the service of the fiscal year ending June 30, 1896, pp. 140–143.

F.

FAIRFIELD, GEORGE A., EXTRA OBSERVER, p. 17.
FAIRFIELD, W. B., ASSISTANT. Transcontinental arc in New Jersey, p. 17. Oblique arc in Alabama, pp. 18, 25.
FARIS, R. L., ASSISTANT. Telegraphic longitudes and magnetic observations at Albany, N. Y., and Cambridge, Mass., p. 15. Survey of Lake Pontchartrain, p. 27. Versailles base, Missouri, p. 32. Magnetic observations in Montana, p. 38. Reference to, p. 28.
FAUST, W. H., ENSIGN, U. S. N., p. 34.
FERNANDINA, FLA. Establishment of tidal station at, p. 24.
FIELD OFFICERS, SALARIES, p. 121.
FIELD OPERATIONS, pp. 1, 2.
FIELD PARTIES. Distribution of. Table No. 1, pp. 61–65.
FISCHER, E. G., pp. 53, 96.
FISCHER, L. A., p. 145.
FITCH, MRS. J. H., pp. 55, 120.
FLEMER, JOHN A., ASSISTANT. Resurvey of Chesapeake Bay pp. 20, 21. Reference to, 52, 85.
FLORIDA STATE OF, EASTERN DIVISION, p. 11. Geodetic work in, p. 23.
FLYNN, H. F., pp. 24, 32, 81, 82.
FLOWER, G. L., ASSISTANT, pp. 42, 55.
FOOTE, TORPEDO BOAT. Speed trial of, pp. 20, 103.
FORD, H., p. 40.
FORD, R. H., p. 88.
FORDAN, E., p. 89.
FORESTER, A. C., p. 14.
FORNEY, STEHMAN, ASSISTANT. Resurvey of Buzzards Bay, Mass., pp. 13, 52. Survey of improvements at mouth of Brazos River, Texas, p. 48. Reference to, p. 90.
FORSE, C. T., LIEUT. COMMANDER, U. S. N., pp. 23, 106.
FORT ADAMS. Trigonometrical determinations, p. 15.
FORT HAMILTON TIDE GAUGE, p. 17.
FOUT, MISS MARIE L., p. 95.
FOWLER, E. H., pp. 86, 90.
FRANKE, H. E., p. 88.
FRENCH, H. O., p. 96.
FRENCH, O. B., ASSISTANT. Longitudes at Washington, D. C., and at Dover, Del., p. 18. Examination of Cestissima rock, p. 34. Magnetics in California, p. 36. Chronometric longitudes in Alaska, pp. 40, 41. Reference to, pp. 35, 56.
FUCA, STEAM LAUNCH, pp. 37, 108.

G.

GARLAND, H. R., pp. 90, 91.
GEDDES, P. H., p. 88.
GEDNEY, STEAMER, pp. 34, 49, 50, 109, 110, 114.
GENERAL EXPENSES. Instruments, etc., pp. 132, 134. Engraving, printing, etc., pp. 134, 135. Stationery, etc., p. 136. Contingencies, pp. 136–138. Recapitulation, p. 138. Classification, p. 138.
GENERAL STATEMENT OF PROGRESS, pp. 4, 5.
GEODETIC OPERATIONS. Connection of Atlantic and Gulf coasts of Florida, p. 23. In Kansas, p. 29. Measurement of Salt Lake base, p. 37.
GEOGRAPHICAL CLASSIFICATION OF LOCALITIES OF FIELD WORK, p. 3.
GEORGIA, STATE OF, EASTERN DIVISION p. 11.
GIBSON, THOMAS A., p. 96.
GILBERT, ALFRED. p. 95.
GILBERT, J. J., ASSISTANT. Triangulation to determine points in San Francisco and San Pablo bays, pp. 33 34. Survey of Washington Sound, p. 37. Salt Lake Base, p. 38. Reference to, pp. 50, 56.
GILLMORE, J. C., LIEUT., U. S. N. In charge of hydrographic division, pp. 54, 112, 113, 118.

GLASGOW, MONT., p. 28.
GLENNAN, DR. A. H., U. S. MARINE HOSPITAL SERVICE, pp. 18, 84.
GODHAVEN, NORTH GREENLAND. Magnetic observations at, 43.
GOHRE, F. C., p. 89.
GOODYEAR, C. P., p. 47.
GOLDEN GATE, p. 34.
GRANGER, F. D., ASSISTANT. Reconnaissance, triangulation and base line measurement in Kansas, pp. 29, 30, 31.
GRAVES, H. S., p. 90.
GRAVITY OBSERVATIONS. British North America and Greenland, p. 43.
GREEN, C. LEE, p. 16.
GREEN, FREEMAN R., p. 95.
GREENLAND EXPLORING EXPEDITION, pp. 2, 5, 43.
GREENVILLE, ALA. Magnetic observations at, p. 23.
GREENVILLE, COUNTY, S. C. Examination of boundary line, p. 46.
GRIFFIN, R. J., DISBURSING AGENT. Report as disbursing agent, pp. 129-143. Reference to, p. 55.
GRIFFIN, JAMES M., pp. 14, 90, 91.
GUADALUPE ISLAND, MEXICO. Seal investigations at, p. 50.

H.

HALIFAX. Magnetic observations at, p. 43.
HALLECK, W. H., p. 14.
HANDLAN, MISS M. L., pp. 90, 91.
HANUS, G. C., LIEUT., U. S. N., ASSISTANT. In command of schooner Eagre. Resurvey of Buzzards Bay, Massachusetts, pp. 12, 104, 105.
HARBAUGH, C. A., p. 145.
HARLOW, C. J., p. 89.
HARRIS, ROLLIN A., pp. 52, 80, 85.
HARRISON, VIRGINIA, p. 85.
HASBROUCK, ROSS, p. 14.
HASSLER, STEAMER, p. 108.
HAYDEN, G. C., p. 26.
HAVRE, MONT., p. 28.
HAZARD, DANIEL L., pp. 81, 82.
HEIN, MISS SOPHIE, pp. 53, 80.
HELMERT, PROFESSOR, p. 44.
HELM, JAMES M., LIEUT., U. S. N. Hydrographic resurvey of San Francisco Bay and Harbor, pp. 34, 35. Reference to, pp. 110, 111.
HENRY, N. G., pp. 55, 120.
HERGESHEIMER, GEORGE, p. 88.
HILDRETH, D. M., p. 86.
HINES, H. K., LIEUT., U. S. N., pp. 13, 47.
HODGKINS, W. C., ASSISTANT. Topographic survey of Marthas Vineyard, Massachusetts, p. 15. Resurvey of Chesapeake Bay, p. 19. Measurement of Salina base, p. 30. Examination of boundary line in South Carolina, pp. 46, 47. Reference to, pp. 52, 85.
HOGGATT, W. B., ENSIGN, U. S. N., p. 40.
HOLMES, W. H., p. 88.
HOOVER, D. N., pp. 89, 90.
HOPE, STEAMER, p. 43.
HUBBARD, J. F., ENSIGN, U. S. N., p. 12.
HUDSON STRAIT. Magnetic and gravity observations in, p. 43.
HUMISTON, HOWARD D., p. 21.
HUNTER, F. C. S., p. 20.
HUNTER, J. W., p. 96.
HURLEY, DANIEL, p. 85.
HYDROGRAPHIC DIVISION. References to, pp. 54, 112, 113. Report of, pp. 117, 118.
HYDROGRAPHIC EXAMINATIONS. Nantucket and Vineyard sounds, p. 14. Coast of Rhode Island, p. 14. Brightmans Beach, Rhode Island, Fishers Island Sound and Greenport Harbor, Long Island, p. 16. San Pedro and Santa Monica bays, 34, 49, 50.
HYDROGRAPHIC INSPECTOR. References to, pp. 53, 54, 108, 109, 117.
HYDROGRAPHIC SURVEYS AND RESURVEYS. Coast of Massachusetts, p. 12. Buzzards Bay, pp. 12, 13. To the southward of Block Island and off Montauk Point, p. 16. Chesapeake Bay, pp. 19, 20. Savannah River entrance, p. 23. Brunswick bar, Georgia, pp. 23, 47, 48. Lake Pontchartrain, p. 27. Mouth of Brazos River, Texas, pp. 28, 48. San Francisco Bay and Harbor, p. 34. San Pedro, p. 34. Southeast Alaska, p. 39. Statement of, pp. 111, 112.
HYDROGRAPHY. Atlantic coast, abstract of, in report of Hydrographic Inspector, pp. 102, 107. Pacific coast, pp. 107, 111.

I.

IARDELLA, C. T., ASSISTANT. Topographical resurvey of south shores of Long Island, p. 17. Reference to, pp. 52, 56, 85.
IDAHO. Reconnaissance and triangulation in, p. 38.
IDAHO, STATE OF, WESTERN DIVISION, p. 33.
ILLINOIS, STATE OF, EASTERN DIVISION, p. 11.
ILLUSTRATIONS, LIST OF, p. 155.
INDIANA, STATE OF, EASTERN DIVISION, p. 11.
INDIAN TERRITORY, MIDDLE DIVISION, p. 27.
INFORMATION FURNISHED. Table No. 3, pp. 69-79.
INSTRUMENT DIVISION. Annual report of, pp. 95-98.
INSTRUMENTS repaired, purchased, and made during the year, pp. 96, 97.
INTERNATIONAL BOUNDARY, UNITED STATES AND MEXICO, pp. 5.
INTERNATIONAL GEODETIC ASSOCIATION, pp. 22, 44.
INTERNATIONAL GEODETIC CONFERENCE, p. 3.
INTERNATIONAL LATITUDE SERVICE, p. 44.
INTRODUCTORY STATEMENT, pp. 1-3.
IOWA, STATE OF, MIDDLE DIVISION, p. 27.

J.

JACOBSEN, JAKOB, U. S. N., p. 13.
JACOMINI, CLEMENT, p. 96.
JAMES, T., p. 12.
JOHNSON, M. K., U. S. N., p. 13.
JONES, CHARLES H., p. 95.
JORDON, DR. D. S., p. 50.

K.

KADIAK ISLAND ASTRONOMICAL STATION, p. 41.
KANSAS, STATE OF, MIDDLE DIVISION, p. 27. Leveling in, p. 29. Reconnaissance in, pp. 30, 31.
KEARNEY, S. A., p. 96.
KELEHER, J. P., p. 14.
KENNEDY, R. M., P. A. SURG., U. S. N., p. 40.
KENNEY, JOHN, p. 19.
KENTUCKY, STATE OF, EASTERN DIVISION, p. 11.
KEYSER, LOUIS P., pp. 89, 90.
KING, H. SIDNEY. In charge of library and archives, pp. 53, 99.
KNAPP, J. J., LIEUT., U. S. N., p. 40.
KNIGHT, H. M., p. 88.
KUMMELL, CHARLES H., pp. 52, 56, 81.
KUNHTSEN, HJALMUR, p. 44.

L.

LAFAYETTE PARK ASTRONOMICAL OBSERVATORY, p. 35.
LAKE PONTCHARTRAIN. Survey of, pp. 27.
LATHAM, E. B., ASSISTANT. Salina base, pp. 30, 31. Mount St. Elias Exploring Expedition, pp. 50, 51. Reference to, pp. 144, 145.
LATITUDE OBSERVATIONS. At Washington, D. C., and Dover, Del., pp. 18, 44. Roundhill and Leesburg, Va., pp. 22, 44. Kansas, p. 29. Presidio station, p. 35. In Alaska, p. 40.
LAUXMANN, M., p. 96.
LAWN, MISS KATE, pp. 53, 80.
LEESBURG, VA. Latitude and magnetic determination at, pp. 22, 44.
LELAND STANFORD UNIVERSITY, pp. 50, 100.
LEVELING. In Mississippi, p. 25. In Kansas, pp. 28, 29. In California, p. 33. In Utah, p. 37.
LIBRARY AND ARCHIVES DIVISION. Annual report of, pp. 99, 101.
LIGHT-HOUSES. Determination of geographical positions of, p. 15.
LINDENKOHL, A., p. 86.
LINDENKOHL, H., p. 86.
LITTLE, F. M., p. 85.
LOCRAFT, C. F., p. 89.
LONG, A. T., ENSIGN, U. S. N., p. 12.
LONG ISLAND. Topographical resurvey of south shore of, p. 17.
LONGITUDES, CHRONOMETRIC. In Alaska, p. 40. In southern California, p. 36.
LONGITUDES, TELEGRAPHIC. Cambridge, Mass., Albany, N. Y., and Montreal, Canada, p. 15. Washington, D. C., and Dover, Del., p. 18. Presidio station, p. 35.

LOPEZ, ED. F., pp. 85, 101.
LOPEZ, R. F., LIEUT., U. S. N., p. 40.
LOUISIANA, STATE OF, MIDDLE DIVISION, p. 27.
LYNCH, B. A., pp. 21, 38, 101.

M.

MAGNETIC OBSERVATIONS. At Montreal, p. 16. At Washington, D. C., and Dover, Del., p. 18. At Roundhill, Leesburg, and various parts of Virginia, p. 22. In central and northwestern States, p. 28. In California, pp. 35, 36. In Montana, p. 38. In Alaska, pp. 40, 41. In various points in British North America and Greenland, pp. 43, 44. In South Carolina, p. 46.
MAHON, C., p. 86.
MAINE, STATE OF, EASTERN DIVISION, p. 11.
MOUNT MANSFIELD, p. 11.
MAPES, MISS L. A., pp. 90, 91.
MAPLE, LIGHT-HOUSE STEAMER, p. 46.
MARINDIN, H. L., ASSISTANT. In charge of Tidal Division, pp. 52, 55, 56, 84, 85. Member of Mississippi River Commission, p. 51.
MANVEL, CALIFORNIA, p. 36.
MARTIN, ARTEMAS, pp. 53, 99, 100, 101.
MARTIN, C. V., p. 86.
MARTIN, THOMAS A., U. S. N., p. 13.
MARYLAND, STATE OF, EASTERN DIVISION, p. 11.
MASSACHUSETTS, STATE OF, EASTERN DIVISION, p 11.
MASSACHUSETTS, STATE TOPOGRAPHICAL SURVEY COMMISSION, p. 51.
MACKENZIE, WILLIAM, p. 88.
MARTHAS VINEYARD, MASSACHUSETTS. Topographical survey of, p. 15.
MASON, J. H., p. 95.
MATCHLESS, SCHOONER, pp. 21, 22, 45, 46, 103, 106, 107, 114.
MATTHEWS, FANNIE I., pp. 91, 101.
MAUPIN, W. C., p. 96.
McARTHUR, STEAMER, pp. 34, 110, 111, 114.
McCABE, H. R., p. 88.
McCULLY, N. A., ENSIGN, U. S. N., p. 35.
McDOWELL, J. A., p. 95.
McGLINCEY, MRS. VIRGINIA, p. 95.
McGOINES, THOMAS, p. 95.
McLANE, W. R., p. 95.
McLEOD, PROFESSOR C. H., p. 15.
McNEILL, OWEN, pp. 91, 95.
MERIDIAN, MISS., p. 25.
MERIDIAN LINES IN VIRGINIA, p. 22.
MEXICO AND UNITED STATES, INTERNATIONAL BOUNDARY COMMISSION, p. 5.
MICHIGAN, STATE OF, EASTERN DIVISION, p. 11.
MIDDLE DIVISION, STATES AND TERRITORIES BETWEEN THE MISSISSIPPI RIVER AND THE ROCKY MOUNTAINS, pp. 4–27.
MILLER, M. L., ENSIGN, U. S. N., p. 35.
MINER, JOHN W., pp. 91, 95.
MINNESOTA, STATE OF, MIDDLE DIVISION, p. 27.
MISCELLANEOUS DIVISION. Annual report of, pp. 92, 95.
MISKIMON, A. J., pp. 13, 48.
MISSISSIPPI. Precise leveling in, p. 25.
MISSISSIPPI RIVER COMMISSION, pp. 5, 51.
MISSISSIPPI, STATE OF, EASTERN DIVISION, p. 11.
MISSOURI, STATE OF, MIDDLE DIVISION, p. 27.
MONTANA, STATE OF, WESTERN DIVISION, p. 33. Magnetic observations in, p. 38.
MONTAUK POINT. Hydrographic survey off, p. 16.
MOORE, E. K., LIEUT. COMMANDER, U. S. N., ASSISTANT. Hydrographic and general surveys in Alaska, pp. 39, 40, 107, 108, 109.
MOORE, ROBERT, p. 48.
MORGAN, JOS. M., p. 89.
MORSE, FREMONT, ASSISTANT. Topographical resurvey of San Francisco Bay and Harbor, p. 33. Determination of location and elevation of Lewis range finder, pp. 34, 35. Chronometric longitudes in Alaska, pp. 40, 41. Survey of Pribilof Islands, p. 42. Reference to, p. 56.
MOSMAN, A. T., ASSISTANT. Primary triangulation in Vermont and New York, to Mount Royal, Canada, p. 11, 49. Resurvey of boundary line between United States and Mexico, p. 49 Reference to, pp. 52, 56, 82.
MOUNT ST. ELIAS EXPLORING EXPEDITION, pp 50, 51
MULLEN, P. J., p. 95.
MUSKEGET ISLAND, p. 14.

N.

NANTUCKET SOUND. Hydrographic examination in, pp. 14, 16.
NAPA, CALIFORNIA, p. 36.
NARRAGANSETT BAY. Determination of geographical positions of light-houses in, p. 15.
NASHVILLE EXPOSITION. Weights and measures exhibits for, pp. 99, 145.
NAUSHON ISLAND, MASSACHUSETTS. Topographic survey of, p. 14.
NAVAL OBSERVATORY, WASHINGTON, D. C. Telegraphic longitudes, p. 18.
NAVAL OFFICERS, LIST OF, ATTACHED TO THE UNITED STATES COAST AND GEODETIC SURVEY DURING THE FISCAL YEAR ENDING JUNE 30, 1897, pp. 115, 116.
NAVAL OFFICERS, LIST OF, ATTACHED TO THE UNITED STATES COAST AND GEODETIC SURVEY JUNE 30, 1897, p. 116.
NAVY DEPARTMENT, pp. 5, 45, 103.
NAVY-YARD, UNITED STATES. Survey of water front, p. 22.
NEBRASKA, STATE OF, MIDDLE DIVISION, p. 27. Reconnaissance in, pp. 30, 31.
NELSON, G. W., pp. 20, 21, 27.
NELSON, JOHN, ASSISTANT. Transcontinental triangulation in New Jersey, p. 17. Survey of Lake Pontchartrain, pp. 17, 27.
NESBIT, SCOTT, DISBURSING AGENT, pp. 55, 120, 143.
NEVA STRAIT, ALASKA, p. 39.
NEVADA, STATE OF, WESTERN DIVISION, p. 33. Reconnaissance and triangulation in, p. 38.
NEWBURYPORT, MASS. Plane table survey of docks and water front, p. 14.
NEW HAMPSHIRE, STATE OF, EASTERN DIVISION, p. 11.
NEW JERSEY, STATE OF, EASTERN DIVISION, p. 11.
NEW MEXICO, TERRITORY OF, WESTERN DIVISION, p. 33.
NEW ORLEANS. High-water inspection at, p. 51.
NEWPORT BEACH, CALIFORNIA, p. 36.
NEW YORK, STATE OF, EASTERN DIVISION, p. 11.
NIANTILIK. Magnetic and pendulum observations at, p. 43.
NISBIT, J. L., pp. 14, 27.
NORFOLK, VIRGINIA. Magnetic observations at, p. 23.
NORTH CAROLINA, STATE OF, EASTERN DIVISION, p. 11.
NORTH DAKOTA, STATE OF, MIDDLE DIVISION, p. 27.
NORTH POMONA, CAL., p. 36.
NOTICES TO MARINERS, CHARTS, AND OTHER PUBLICATIONS. Reference to, pp. 5, 54, 93.

O.

OBLIQUE ARC. Triangulation of, in Alabama, pp. 17, 25.
OCEANSIDE, CAL., p. 36.
OFFICE FORCE. Pay of, pp. 122–124.
OFFICE OF STANDARD WEIGHTS AND MEASURES, p 2. Annual report of, pp. 144–148.
OFFICE WORK, p. 5.
OFFICERS, FIELD. Pay of, p. 121.
OFFICERS, NAVAL, LIST OF, ATTACHED TO THE UNITED STATES COAST AND GEODETIC SURVEY, JUNE 30, 1897, pp 115, 116.
OFFICERS, NAVAL, LIST OF, ATTACHED TO THE UNITED STATES COAST AND GEODETIC SURVEY, JUNE 30, 1897, p. 116.
OGDEN, H. G., ASSISTANT. Geodetic connection of Atlantic and Gulf coasts of Florida, pp. 23, 24. Reference to, pp. 52, 82.
OGDEN, UTAH. Primary station, pp. 37, 38.
OHIO, STATE OF, EASTERN DIVISION, p. 11.
OKLAHOMA TERRITORY, MIDDLE DIVISION, p. 27.
OREGON, STATE OF, WESTERN DIVISION, p. 33.
OREGON, U. S. BATTLE SHIP, p. 50.
OSBORN, A. P., LIEUT. COMMANDER, U. S. N., ASSISTANT. Hydrographic resurvey of San Francisco Bay and entrance, p. 34. Speed trial course in San Francisco Bay, p. 49. Hydrographic examination of San Pedro and Santa Monica bays, California, pp. 49, 50 Seal investigations at Guadalupe Island, Mexico, p. 50. Reference to, pp. 109, 110.
OVER, CHARLES, p. 95.

P.

PACIFIC COAST STEAMSHIP COMPANY, p. 108.
PARKER, DAVID, p. 95.
PARTY EXPENSES. Atlantic coast, p. 125. Gulf coast, p. 125. Offshore work, p. 126. Pacific coast, p. 126. Tides, etc., p. 127. Coast pilot, etc., p. 127. Magnetics, p. 127. Leveling, p. 127. State surveys, p. 128. Gravity, etc., p. 128. Transcontinental work, p. 129. Naval travel, etc., p. 129. Objects not named, pp. 127-130. Recapitulation of, p. 130. Classification of, p. 131.
PASS MANCHAC, LOUISIANA, p. 27.
PATAPSCO RIVER, TRIANGULATION OF, p. 19.
PATTERSON, STEAMER, pp. 39, 40, 55, 84, 107, 108, 109, 114.
PEABODY, W. F., p. 88.
PEARY, R. E., LIEUT., U. S. N., pp. 43, 44.
PECK, MISS IDA M., pp. 55, 85, 120.
PECK, ROBERT G., LIEUT., U. S. N., ASSISTANT. Hydrographic resurvey of Buzzards Bay, p. 13. Resurvey of Brunswick Bar, Georgia, pp. 23, 47, 48, 103.
PEMBINA, N. DAK., p. 28.
PENNSYLVANIA, STATE OF, EASTERN DIVISION, p. 11.
PERIL STRAIT, ALASKA. Survey of, p. 39.
PERKINS, F. WALLEY, ASSISTANT. Extension of transcontinental arc in New Jersey, p. 17.
PETERS, G. H., LIEUT., U. S. N., p. 119.
PETERSEN, S., p. 12.
PHINNEY, ELIJAH H., p. 16.
PHOTOGRAPHING. Statistics of, p. 88.
PIKE, MISS LILIAN, p. 82.
PILOT PEAK, UTAH, p. 38.
PONTCHARTRAIN, LAKE. Survey of, p. 27.
PORT ORCHARD NAVAL STATION, pp. 37, 50.
PORT ROYAL. Tidal record at, p. 23.
PRATT, J. F., ASSISTANT. In charge of instrument division, p. 53. Annual report of, pp. 99-101.
PRATT, SEDGWICK, CAPT., U. S. A., p. 34.
PREFATORY NOTE, p. vii.
PRESIDIO ASTRONOMICAL STATION, pp. 33, 35, 56.
PRESTON, E. D., ASSISTANT. Executive officer to the Superintendent, p. 55.
PRIBILOF ISLANDS. Survey of, pp. 41, 42.
PROCTOR, WILLIAM B., U. S. N., p. 12.
PRINTING, STATISTICS OF, p. 88.
PROGRESS. General statement of, p. 4.
PROGRESS SKETCHES. List of, p. 149.
PROMONTORY, UTAH. Primary station, p. 37.
PROVIDENCE RIVER, p. 15.
PUBLICATIONS OF THE UNITED STATES COAST AND GEODETIC SURVEY. List of, and numbers received from the Public Printer, p. 94.
PUBLISHING OBSERVATIONS. Expenditures for, p. 132.
PUGET SOUND. Survey of, p. 51.
PUTNAM, G. R., ASSISTANT. Longitude and magnetic work in Greenland and various points in British North America, pp. 42-44.

Q.

QUICK, SCHOONER, pp. 27, 114.

R.

RAMSEY, WALTER P. In charge of Miscellaneous Division, pp. 53, 95.
RANDALL, ASA G., pp. 90, 91.
RECONNAISSANCE. To connect Atlantic and Gulf coasts of Florida, p. 23. In Nebraska and northern Kansas, pp. 30, 31. In Utah, Nevada, and Idaho, p. 38. Mount St. Elian Exploring Expedition, p. 51.
RECORDS RECEIVED IN THE ARCHIVES DURING THE YEAR ENDING JUNE 30, 1897, p. 100.
REEDY ISLAND TIDAL INDICATOR, pp. 18, 84.
REGENNAS, C. E., p. 96.
REID, J. H., ENSIGN, U. S. N., pp. 12, 20.
REPAIRS AND MAINTENANCE OF VESSELS, p. 113. Expenditures for, pp. 131, 132.
REPORT OF THE ASSISTANT IN CHARGE OF THE COAST AND GEODETIC SURVEY OFFICE, pp. 80-98.
REPORT OF THE ASSISTANT IN CHARGE OF THE OFFICE OF STANDARD WEIGHTS AND MEASURES, pp. 144-148.
REPORT OF THE CHART DIVISION, pp. 90-92.
REPORT OF THE COAST PILOT DIVISION, pp. 118, 119.
REPORT OF THE COMPUTING DIVISION, pp. 81-83.
REPORT OF THE DISBURSING AGENT, pp. 120-143.
REPORT OF THE DRAWING AND ENGRAVING DIVISION, pp. 86-90.
REPORT OF THE HYDROGRAPHIC DIVISION, pp. 117, 118.
REPORT OF THE HYDROGRAPHIC INSPECTOR, pp. 102-119.
REPORT OF THE INSTRUMENT DIVISION, pp. 95-98.
REPORT OF THE LIBRARY AND ARCHIVES DIVISION, pp. 99-101.
REPORT OF THE MISCELLANEOUS DIVISION, pp. 92-95.
REPORT OF THE TIDAL DIVISION, pp. 83-85.
REPORTS, ABSTRACTS OF, FROM FIELD PARTIES, pp. 11-27.
REVILLE, MISS ALICE, p. 85.
RHODE ISLAND, STATE OF, EASTERN DIVISION, p. 11. Hydrographic examination of coast of, p. 14.
RICHARDS, J. C., p. 16.
RICHARDSON, ATTRELL, p. 95.
RICHMOND, VA. Magnetic observations at, p. 23.
RITTER, HOMER P., ASSISTANT. Magnetic determinations in California, pp. 35, 36. Salt Lake base, p. 38. Chronometric longitudes in Alaska, p. 40.
ROBERT, H. M., COL., ENGINEER CORPS, p. 48.
RODGERS, AUG. F., ASSISTANT. Topographical resurvey of San Francisco bay and harbor, p. 33. Reference to, pp. 35, 37, 50, 56, 84, 107.
RODMAN, HUGH, LIEUT., U. S. N., ASSISTANT. In charge of Hydrographic Division, pp. 54, 55, 112, 117
RODMAN, HUGH, YEOMAN, U. S. N., pp. 40, 41.
ROETH, J. H., p. 117.
ROSS, JOHN, pp. 22, 113.
ROSSELL, W. T., MAJ., p. 25.
ROUNDHILL, VA. Magnetic determination at, pp. 22, 44.
RUGBY, N. D., p. 28.
RUSSELL, F. M., ENSIGN, U. S. N., pp. 13, 47.

S.

SALARIES. Expenditures for field officers, p. 121. Office force, pp. 122-124.
SALINA BASE, pp. 29, 30.
SALISBURY SOUND, ALASKA, pp. 39, 40.
SALT LAKE BASE LINE, pp. 37, 38.
SAN BERNARDINO, CAL., p. 36.
SAN FRANCISCO BAY AND HARBOR. Hydrographic and topographic resurvey of, pp. 33, 34. Bluff Point trial course in, p. 49.
SAN JACINTO, CAL., p. 36.
SAN PABLO BAY. Resurvey of, p. 34.
SAN PEDRO BAY. Hydrographic examination of, pp. 34, 49, 50.
SANTA MONICA BAY, pp. 34, 36, 49, 50.
SANTA MONICA-SAN PEDRO DEEP WATER HARBOR BOARD, p. 56.
SANTA ROSA, CAL., p. 36.
SAUSALITO TIDAL STATION, pp. 33, 35.
SAVANNAH RIVER ENTRANCE. Hydrographic resurvey of, p. 23.
SCHOTT, C. A., ASSISTANT. Chief of Computing Division, pp. 52, 56, 83.
SCOTT, ED. D., p. 95.
SEAL INVESTIGATIONS AT GUADALUPE ISLAND, MEXICO, p. 50.
SEFTON, A. H., p. 88.
SEARS, J. H., LIEUT., U. S. N., ASSISTANT. Hydrographic resurvey of San Francisco Bay and entrance, p. 34. Reference to, pp. 110, 111.
SERGIUS NARROWS, p. 40.
SEYMOUR NARROWS, p. 40.
SEYMOUR, I. K., ENSIGN, U. S. N., p. 16.
SHAFTER, W. R., COL., U. S. A., p. 34.
SHEARMAN, J. A., LIEUT., U. S. N. Services on steamer Blake, pp. 12-20.
SHEETZ, F. D., p. 19.
SHEPHERD, J. E., p. 48.
SHIDY, L. P., pp. 52, 85.
SIDNEY, WASHN., p. 50.
SIMONS, A. B., pp. 53, 80.
SINCLAIR, C. H., ASSISTANT. Telegraphic longitudes and magnetic observations at Albany, Cambridge, and Montreal, p. 15. Washington, D. C., and Dover, Del., p. 18. Roundhill and Leesburg, Va., pp. 22, 45. Reference to, pp. 52, 85.

SIPE, E. H., p. 28.
SITKA SOUND, p. 40.
SLEMONS, J. M., p. 20.
SMITH, JAMES L., p. 89.
SMOOT, JOHN H., pp. 89, 90.
SOLVEN, MATT., p. 22.
SOMMER, E. J., p. 86.
SOUTH BASE, p. 37.
SOUTH CAROLINA, STATE OF, EASTERN DIVISION, p. 11.
SOUTH DAKOTA, STATE OF, MIDDLE DIVISION, p. 27.
SPARROWS POINT, MD. Tidal station established, p. 20.
SPARTANBURG COUNTY, S. C. Examination of boundary line, p. 46.
SPAULDING, J. G., pp. 17, 84.
SPECIAL ASSIGNMENTS, p. 2.
SPECIAL HYDROGRAPHIC EXAMINATIONS. Atlantic coast, p. 16.
SPECIAL OPERATIONS, pp. 5, 18, 43, 51.
SPEED-TRIAL COURSES. Chesapeake Bay, pp. 21, 22, 45. San Francisco Bay, pp, 34, 49.
STANDARD WEIGHTS AND MEASURES OFFICE. Annual report of, pp. 144–148. Salaries and contingent expenses, p. 139.
STATISTICS. Of field and office work of the Coast and Geodetic Survey for the fiscal year 1897 and total to June 30, 1898. Reconnaissance, base lines, triangulation, astronomical work, magnetic work, gravity measures, p. 66. Topography, hydrography, records, p. 67. Maps and charts, engraving, printing, p. 68.
ST. PAUL ISLAND, ALASKA, p. 42.
STONE, C. M., ENSIGN, U. S. N., p. 34.
STORM, OTTO, pp. 96, 145.
STRAUBER, O. M., p. 48.
STRONG, C. B., pp. 26, 29.
SULLIVAN, F. B., ENSIGN, U. S. N., pp. 20, 48.
SUPERINTENDENTS OFFICE, p. 55.
SUBOFFICE, SAN FRANCISCO, pp. 55, 56.
SYDNEY. Magnetic observations at, p. 43.
SYMINGTON, POWERS, ENSIGN, U. S. N., pp. 20, 34.

T.

TABULAR STATEMENT AND ANNUAL OFFICE REPORTS, p. 59.
TALLMAN, A. S., p. 14
TARBOX, GLENNIE, ENSIGN, U. S. N., ASSISTANT. Chief of Hydrographic Division and of Coast Pilot Division, p. 54. Reference to, pp. 112, 113, 117, 119.
TARPAULIN COVE, VINEYARD SOUND, p. 14.
TAUSSIG, E. D., LIEUT. COMMANDER, U. S. N. Hydrographic inspector, pp. 53, 117.
TELEGRAPHIC LONGITUDES. See longitudes.
TENNESSEE, STATE OF, EASTERN DIVISION, p. 11.
TEXAS, STATE OF, MIDDLE DIVISION, p. 27.
THOBURN, DR. WILBUR, p. 50.
THOMAS ROY, p. 89.
THOMPSON, H. L., p. 88.
THOMPSON, W. A., pp. 88, 90.
TIDAL DIVISION. Annual Report of, pp. 83–85.
TIDAL INDICATOR. At Reedy Island, Delaware, p. 84.
TIDAL OBSERVATIONS. List of, during the year, p. 85. At Hyannis, Massachusetts, p. 14. At Port Royal, S. C., p. 23. At Sausalito, p. 35. In Southeast Alaska, p. 39. In Brasos River, Texas, p. 48. Seymour Narrows, British Columbia, p. 84. Lisbon, Portugal, p. 84.
TIDAL STATIONS. At Reedy Island, Delaware, p. 18. Sparrows Point, Md., p. 20. Fernandina, Fla., p. 24. Sausalito, Cal., p. 33. Presidio, Cal., p. 33.
TIDE GAUGES. At Fort Hamilton, N. Y., pp. 17, 84. Washington Navy-Yard, pp. 19, 84. Norfolk, p. 21. North Point, p. 22. Savannah, Ga., p. 23. West End and Pass Manchac, Louisiana, p. 27. Reedy Island, Delaware, p. 84. Sparrows Point, Md., p. 84. Rort Royal, S. C., p. 84. Fernandina, Fla., p. 84. Sausalito, Cal., p. 84.
TILLMAN, E. H., LIEUT. U. S. N., ASSISTANT, pp. 21, 22, 45, 46, 103, 106, 107.
TITTMANN, O. H., ASSISTANT IN CHARGE OF OFFICE AND TOPOGRAPHY, pp. 52, 55, 56, 80.
TOPOGRAPHICAL SURVEYS AND RESURVEYS. Buzzards Bay, Massachusetts, p. 13. Naushon Island, Massachusetts, p. 14. Marthas Vineyard, Massachusetts, p. 15. South shores of Long Island, p. 17. Chester River Maryland, p. 20. Lake Pontchartrain, Louisiana, p. 27. Washington Sound, p. 37. Southeast Alaska, pp. 39, 41. Mount St. Elias Exploring Expedition, p. 51.
TORREY, E. F., pp. 30, 31.
TRANSCONTINENTAL WORK. Extension of arc eastward to capes May and Henlopen, p. 17. Reconnaissance and base line measurements in Kansas, pp. 28, 29. Geodetic work in Kansas, p. 29. Versailles base, Missouri, p. 31.
TRIANGULATION. At Mount Royal, Montreal, Canada, p. 11. Patapsco River, p. 18. Chester River, Maryland, pp. 20, 21. Resurvey of Chesapeake Bay, pp. 21, 22. Oblique arc in Alabama, p. 25. Lake Pontchartrain, p. 27. San Francisco and San Pablo bays, p. 33. Southern California, p. 36. Utah, Nevada, and Idaho, p. 38. Southeast Alaska, pp. 37, 39, 41, 42. Mount St. Elias Exploring Expedition, p. 51.
TUCKERNUCK ISLAND, p. 14.
TURNER, PROF. H. H., p. 15.

U.

UMANAK. Magnetic and gravity observations, p. 43.
UNALASKA ASTRONOMICAL STATION, p. 41.
UNITED STATES ARMY, CORPS OF ENGINEERS, pp. 25, 84, 106.
UNITED STATES AND MEXICO INTERNATIONAL BOUNDARY COMMISSION, p. 5.
UPPERMAN, A., p. 91.
UTAH TERRITORY, WESTERN DIVISION, p. 33. Triangulation in, p. 38.

V.

VAN DOREN, W. A., p. 88.
VERIFICATION OF WEIGHTS AND MEASURES DURING FISCAL YEAR 1896–97. Abstract of, pp. 145, 148.
VERMONT, STATE OF, EASTERN DIVISION, p. 11.
VESSELS. List of, p. 116. Repairs of, p. 113, 115. Expenditures for pp. 131, 132.
VICKSBURG, MISS. Precise leveling at, p. 25.
VINAL, W. IRVING, ASSISTANT. Topographic survey of Naushon Island, Massachusetts, p. 14. Topographic survey of Marthas Vineyard, Massachusetts, p. 15.
VINEYARD SOUND, MASSACHUSETTS. Hydrographic examination of, pp. 14, 16.
VIRGINIA, STATE OF, EASTERN DIVISION, p. 11.

W.

WADDOUP, UTAH. Primary station, p. 37.
WAGNER, H. W., p. 29.
WAINWRIGHT, D. B., ASSISTANT. Determination of geographical positions of light-houses in Narragansett Bay and Providence River, Rhode Island, p. 15. Resurvey of Chesapeake Bay, p. 19. Speed trial course in Chesapeake Bay, pp. 45, 46, 85, 103. Reference to, pp. 20, 21, 52.
WAKEFIELD, G. F., p. 36.
WALKER, J. G., REAR ADMIRAL, U. S. N., p. 109.
WAR DEPARTMENT, pp. 5, 47.
WOPSCHAL, H. L., p. 12.
WASHINGTON NAVY-YARD TIDE GAUGE, pp. 19, 84.
WASHINGTON SOUND. Survey of, p. 37.
WASHINGTON, STATE OF, WESTERN DIVISION, p. 33.
WATKINS, C. L., p. 21.
WATKINS, J. T., pp. 12, 113, 118.
WEEKS, B. W., TIDAL OBSERVER, pp. 23, 25, 84, 85.
WEIGHTS AND MEASURES OFFICE. Annual report of, pp. 144–148. Salaries and contingent expenses, p. 139.
WEIGHTS AND MEASURES, verification of, pp. 145, 148.
WELD, F. F., p. 19.
WELKER, P. A., ASSISTANT. Triangulation of Lake Pontchartrain, Louisiana, p. 27. Salt Lake base, p. 38. Reconnaissance and triangulation in Utah, Nevada, and Idaho, p. 38. Reference to, p. 28.
WESTDAHL, FERDINAND. Topographical resurvey of San Francisco Bay and Harbor, pp. 33, 34. Examination of approaches to Coquille River, Oregon, p. 37. Reference to, p. 56.
WEST END, LA., p. 27.
WESTERN DIVISION, STATES AND TERRITORIES BETWEEN THE ROCKY MOUNTAINS AND THE PACIFIC, pp. 4–5, 33.
WEST VIRGINIA, STATE OF, EASTERN DIVISION, p. 11.
WHITEHEAD, ERNEST, p. 85.
WHITEWATER BAY, p. 39.
WHITING, HENRY L., ASSISTANT. Service on Mississippi River Commission, p. 51. Obituary, p. 56.
WHITMAN, W. R., pp. 96, 145.

WILEY, H. A., ENSIGN, U. S. N., pp. 12, 20.
WILKES, C. S., p. 38.
WILLARD, J. H., MAJOR, U. S. A., pp. 25, 26.
WILLENBUCHER, W. C., p. 118.
WILLIAMS, J. B., p. 95.
WILLIAMS, LOUIS L., p. 89.
WILLISTON, N. DAK., p. 28.
WILLS, E. B., pp. 53, 80.
WILSON, HENRY D., U. S. N., p. 13.
WINSTON, ISAAC, ASSISTANT. Precise levels in Mississippi, pp. 25, 26. Precise levels in Kansas, pp. 28, 29. Reference to, pp, 52, 82.
WISCONSIN, STATE OF, EASTERN DIVISION, p. 11.
WRANGELL STRAIT, p. 39.
WURDEMANN, F. G., p. 88.
WYOMING, STATE OF, WESTERN DIVISION, p. 33.
WYVILL, E. H., pp. 113, 118.

Y.

YATES, CHARLES C., ASSISTANT. Triangulation at Mount Royal, p. 11. Salt Lake base, p. 38. Survey of mouth of Brazos River, Texas, p. 48.
YOUNG, F. A., ASSISTANT. Survey of Lake Pontchartrain, p. 27. Chronometric longitudes in Alaska, pp. 40, 41. Reference to, pp. 52, 82.

Z.

ZUST, A. F., AID, pp. 52, 85.

REPORT.

PART I.

INTRODUCTORY STATEMENT.

The progress made by the Coast and Geodetic Survey during the fiscal year 1897 in the various branches of work committed to its care is duly set forth in this report, being briefly outlined in this introductory statement, in the general summary, and the statistical tables, and more fully exhibited in the abstracts of reports from field parties and in office reports.

The usual maps and sketches, showing graphically the progress of the Survey, and the requisite illustrations, accompany the report, and will be found in their appropriate places.

Field operations.—The field operations carried on during the year included the measurement of base lines; reconnaissance, triangulation; astronomical determinations of time, latitude, and azimuth; telegraphic and chronometric determinations of longitude; topographical and hydrographical surveys and resurveys; tidal and current observations; determinations of magnetic declination, dip, and intensity; pendulum observations for determination of the force of gravity; geodetic and ordinary spirit leveling; Coast Pilot examinations; boundary-line surveys; special topographic and hydrographic examinations, including the investigation of reported dangers to navigation; the laying out and marking of naval speed-trial courses; and special surveys for other departments of the Government.

About forty parties were engaged on the various branches of the work during the year, and their fields of operation embraced nearly all sections of the country. Surveys or observations were conducted within the limits or on the coasts of 19 States and Territories along the seaboard, and in 9 interior States and Territories.

The operations of importance begun, continued, or completed during the year may be enumerated as follows: Completion of the topographic and hydrographic resurvey of Buzzards Bay; continuation of hydrographic surveys and examinations on the coast of Massachusetts; surveys in Block Island Sound and off Montauk Point; hydrographic examinations in Marthas Vineyard and Nantucket sounds; topographic survey of Marthas Vineyard; topographic survey of Naushon Island; continuation of the topographic resurvey of the southern shores of Long Island; connection of the longitude station at Montreal, Canada, with the primary triangulation of Vermont and New York; telegraphic longitude determinations at various eastern points, and connection of the longitude net of the United States with that of Europe, through Montreal, Canada; completion of the main triangulation eastward across the States of Maryland and Delaware to Capes May and Henlopen; resurvey of Chesapeake Bay and its tributaries, triangulation, topography, and hydrography; latitude and magnetic determinations in the States of Delaware and Virginia; resurvey of Brunswick Bar, St. Simon Sound, Georgia; geodetic connection of the Atlantic and Gulf coast of Florida; hydrographic examination of the mouth of Savannah River, Georgia; tidal observations at various points on the Atlantic, Gulf, and Pacific coasts; survey of Lake Pontchartrain, Louisiana, triangulation, topography, and hydrography; completion of the primary triangulation of the oblique arc in Alabama; precise leveling from Vicksburg to Meridian, Miss.; continuation of the determination of points in aid of State surveys;

continuation of the transcontinental triangulation, including the measurement of verification bases in Missouri, Kansas, and Utah; continuation of the transcontinental line of precise levels in Kansas; reconnaissance in Nebraska and northern Kansas; magnetic determinations in the Central and Northwestern States; magnetic determinations in southern and western California; connection of the Los Angeles base line with the primary triangulation of California; continuation of the topographic and hydrographic resurvey of San Francisco Bay and Harbor, with incidental triangulation; continuation of the triangulation and topography of Washington Sound; special examinations and investigations of reported dangers to navigation at various points; continuation of hydrographic and general surveys in southeastern Alaska; chronometric determinations of longitudes in Alaska, with incidental latitude and magnetic determinations; survey of the Pribilof Islands, Alaska; magnetic and gravity determinations at various points in British North America and Greenland; tidal and current observations at various points.

Requests from national or State authorities for special surveys or for the detail of officers for special service have been complied with whenever practicable, in accordance with the uniform practice, and the following operations may be mentioned in this connection: Determination and marking of a new position for the Nantucket South Shoal Light-ship, at the request of the Light-House Board; laying out and marking of speed-trial courses in Chesapeake Bay and San Francisco Bay, at the request of the Navy Department; resurvey of Brunswick Bar, St. Simon Sound, Georgia, for the War Department, in accordance with the provisions of the river and harbor act of June 3, 1896; examination of a portion of the boundary between Spartanburg and Greenville counties, S. C., at the request of the county commissioners; hydrographic survey of the mouth of Brazos River, Texas, for the ascertainment of the character and value of the improvements made by the Brazos River Channel and Dock Company, at the request of the board of engineers appointed by the honorable Secretary of War in accordance with the provisions of the river and harbor act of June 3, 1896; hydrographic examination in the vicinity of the Port Orchard Naval Station, at the request of the Navy Department.

Special assignments.—The assignments of two of the Assistants of the Survey to special duty by appointment of the President have been continued, one as a member of the Mississippi River Commission and the other as member of the International Boundary Commission, organized for the survey and marking of that portion of the boundary line between the United States and Mexico to the westward of El Paso. The former assignment continued throughout the year and the latter until September, when the labors of the boundary commission were completed. Four other Assistants were also detailed for short periods on special duty, as follows: One as member of the board of engineers appointed to examine and report upon the improvements made at the mouth of the Brazos River; one as a member of the Santa Monica-San Pedro Deep Water Harbor Board; one to accompany the Greenland Exploring Expedition; and one to accompany Prof. H. G. Bryant's Mount St. Elias Exploring Expedition. In the last two cases all expenses, excepting the salaries of the officers detailed, were paid by those having charge of the expeditions, but copies or originals of all valuable records obtained have been filed in the archives of the Coast and Geodetic Survey. The magnetic and gravity observations made in various parts of British North America and Greenland by the Assistant who accompanied the Greenland Exploring Expedition will prove of special value to this Survey.

Office work.—In the office a large amount of work has been accomplished in the reduction computation, and discussion of field observations, and in preparing for publication the charts of the Survey, the Coast Pilot, the annual Tide Tables, and the monthly Notices to Mariners. The Notices to Mariners, as usual, have been distributed gratuitously. The issue during the year of the above-named publications has been as follows: Charts, 57 188; Coast Pilots, 1 284; Tide Tables, 6 796; Notices to Mariners, 6 100.

Office of Standard Weights and Measures.—The usual amount of work in testing, verifying, and standardizing weights and measures for departments of the Government, States, educational institutions, and private parties, has been accomplished, and information has been promptly furnished to all applicants. For the work done for outside parties a nominal charge is made and the proceeds are covered into the Treasury. Some progress has been made also in the preparations for the construction and verification of electrical standards, but a point has now been

reached where an increase of the instrumental outfit is imperatively demanded. The annual appropriation of $500 for the purchase of materials and apparatus and for incidental expenses of the office is inadequate, and an earnest recommendation is made for its increase to $2 500. This increase, as stated in the letter accompanying the estimates for the fiscal year 1899, is not intended to be continuous, but to apply only for a single year to enable the office to procure instruments which are indispensable.

Arrangement of this report.—The usual division of the report into two parts, one containing the historical matter and giving detailed accounts of the various field and office operations, the usual statistical tables, office reports, and financial statements, and the other containing the scientific papers relating to methods, discussions, and results, has been retained.

The contents of Part I are arranged on the following order: Introductory statement, including brief notice of field and office work, special assignments, Office of Standard Weights and Measures, geographical classification of localities of field work, and special operations; General statement of progress in field and office work; Estimates for the fiscal year 1899 in detail, and the explanations accompanying them; Abstracts of reports from field parties, including Eastern, Middle, Western, and Alaska divisions, and special operations; Abstract of office and suboffice annual reports; Supplementary tables, viz, No. 1, Showing the distribution and personnel of field parties; No. 2, Giving statistics of field and office work; No. 3, Giving list of information furnished during the year in reply to official and personal calls; Office annual reports, viz, No. 1, Report of the Assistant in Charge of the Office, accompanied by reports of the various chiefs of divisions; No. 2, Report of the hydrographic inspector; No. 3, Report of the disbursing agent; No. 4, Report of the Assistant in Charge of the Office of Standard Weights and Measures; List of maps and progress sketches to illustrate the work, and the maps and sketches themselves at the end of the volume.

Part II, containing the Appendices, or professional and scientific papers, follows in order, and a list of them will be found in the appropriate place. The illustrations are, for convenience, bound with the appendices to which they respectively belong.

Geographical classification of localities of field work.—The same geopraphical classification adopted and in use since 1891 has been retained in this report, viz:

I. The Eastern Division, including all States east of the Mississippi River.

II. The Middle Division, comprising the States and Territories between the Mississippi River and the Rocky Mountains.

III. The Western Division, embracing the States and Territories west of the Rocky Mountains.

IV. The Division of Alaska, including Alaska, southeast Alaska, and the Aleutian and Pribilof islands.

Special operations are grouped together under one heading without regard to the above classification, but are nevertheless described in geographical order.

GENERAL STATEMENT OF PROGRESS.

FIELD WORK.

EASTERN DIVISION.—*States east of the Mississippi River.*—Within the limits or off the coasts of the States constituting the Eastern Division the following-named operations were begun, continued, or completed during the fiscal year 1897: Connection of Mount Royal, near Montreal, Canada, with the primary triangulation of Vermont and New York, begun; hydrographic surveys on the coast of Massachusetts between Gloucester and Manchester, completed; hydrographic resurvey of Buzzards Bay, Massachusetts, continued; topographic resurvey of Buzzards Bay, Massachusetts, completed; special hydrographic examinations and surveys in Nantucket and Vineyard sounds, and on the coast of Rhode Island, completed; topographic survey of Naushon Island, Massachusetts, completed; topographic survey of Marthas Vineyard, Massachusetts, in progress; determination of the geographical positions of light-houses in Narragansett Bay and Providence River, Rhode Island, completed; telegraphic longitude determinations and magnetic observations at Albany, N. Y., Cambridge, Mass., and Montreal, Canada, completed; hydrographic surveys to the southward of Block Island Sound and off Montauk Point, and special examinations at various points, completed; topographic resurvey of the southern shores of Long Island, New York, continued; tidal record and the automatic tidal indicator at Fort Hamilton, New York Harbor, continued; extension of the transcontinental arc eastward to Capes May and Henlopen, completed; tidal record and automatic tidal indicator at Reedy Island, Delaware River, continued; telegraphic determination of the difference of longitude between Washington, D. C., and Dover, Del., with incidental latitude and magnetic determinations, completed; tidal record of the Washington, D. C., Navy-Yard, continued; resurvey of Chesapeake Bay, triangulation, topography, hydrography, and tidal and current observations, begun and good progress made; latitude and magnetic determinations at Round Hill and Leesburg, Va., completed; magnetic determinations and establishment of meridian lines at various points in the State of Virginia, completed; tidal record at Port Royal, S. C., completed; resurvey of Brunswick Bar, Georgia (see special operations); establishment of a tidal station at Fernandina, Fla., observations in progress; geodetic connection of the Atlantic and Gulf coasts of Florida, begun and about half finished; hydrographic resurvey of Savannah River Entrance, Georgia, completed; triangulation of the oblique arc in Alabama, completed to Mobile; precise leveling in Mississippi, Vicksburg to Meridian, completed.

MIDDLE DIVISION.—*States and Territories between the Mississippi River and the Rocky Mountains.*—Within the limits of the Middle Division, as above defined, the following operations were begun, continued, or completed during the fiscal year: Survey of Lake Pontchartrain, triangulation, topography, and hydrography, continued; hydrographic survey at the mouth of Brazos River, Texas (see special operations); magnetic observations at various points on the Central and Northwestern States, completed; transcontinental line of precise levels in Kansas, continued; measurement of a verification base line at Salina, Kans., for the transcontinental triangulation, completed; reconnaissance in Nebraska and northern Kansas, for the ninety-eighth meridian triangulation, completed; measurement of a verification base line at Versailles, Mo., completed.

WESTERN DIVISION.—*States and Territories west of the Rocky Mountains.*—Within the limits or off the coasts of the States comprising the Western Division the following operations were begun, continued, or completed during the fiscal year: Topographic and hydrographic resurvey of San Francisco Bay and Harbor, with incidental triangulation, continued; tidal observation at the Sausalito station, continued; magnetic determinations at forty-eight points in the State of California, completed; determination of the latitude and longitude of the new Presidio astronomical

station, San Francisco, completed; connection of the Los Angeles base line with the triangulation of California, completed; examination of reported dangers to navigation at the mouth of Coquille River, Oregon, completed; survey of Washington Sound, Washington, triangulation and topography, continued; transcontinental triangulation in Utah and measure of the Salt Lake base line, completed; reconnaissance for triangulation in the States of Utah, Nevada, and Idaho, just begun; magnetic observations at various points in Montana, completed.

DIVISION OF ALASKA.—In this division the following field operations were in progress or completed during the fiscal year: Hydrographic and general surveys in southeast Alaska, Salisbury Sound, Peril Strait, Sitka Sound, etc., continued; chronometric determination of differences of longitude between Sitka, Kadiak, and Unalaska, Alaska, and also latitude and magnetic determinations at the same points, completed; survey of the Pribilof Islands, in progress.

SPECIAL OPERATIONS.—Under this head are included operations undertaken by special order of Congress, or at the request of Executive Departments of the Government or other proper authority, and the following were carried on during the year: Magnetic and gravity determinations at various points in British North America and Greenland by an Assistant of the Survey accompanying the Greenland expedition, completed; latitude determinations at Dover, Del., and Round Hill and Leesburg, Va., with a view to the selection of stations for the International Latitude Service, completed; laying out of a speed trial course for naval vessels in Chesapeake Bay, at the request of the Navy Department, completed; examination of a portion of the boundary line between Spartanburg and Greenville counties, S. C., at the request of the county commissioners, completed; resurvey of Brunswick Bar, Georgia, at the request of the War Department and in accordance with special order of Congress, completed; hydrographic survey at the mouth of Brazos River, Texas, at the request of the board organized in accordance with the provisions of the river and harbor act of June 3, 1896, to determine the value of improvements constructed by the Brazos River Channel and Dock Company, completed; laying out of a speed trial course in San Francisco Bay, at the request of the Navy Department, completed; hydrographic examinations of San Pedro and Santa Monica Bays, California, at the request of the board organized in accordance with the provisions of river and harbor act of 1896 for the selection of a deep-water harbor in southern California, completed; seal investigation at Guadalupe Island, northwest coast of Mexico, under the direction of scientists from the Leland Stanford University, by direction of the honorable the Secretary of the Treasury, completed; examination of the approaches to the Port Orchard Naval Station, at the request of the Navy Department, completed; explorations in the vicinity of Mount St. Elias, by Prof. H. G. Bryant's expedition, one of the Survey Assistants being detailed to accompany and assist the party, in progress; operations of the International Boundary Commission, on a portion of the boundary line between the United States and Mexico, under the State Department, completed; service of an Assistant of the Survey as member of the Mississippi River Commission, continued.

Reference to the reports made by the officers in charge of the various field parties will be found in the body of this report, geographically arranged under the appropriate division headings.

OFFICE WORK.

The usual satisfactory progress has been made in the various branches of the office work, as already mentioned in the introductory statement. The annual reports of the Assistant in Charge of the Office, the Hydrographic Inspector, and the Assistant in Charge of the Office of Standard Weights and Measures, which give full information on this subject, are printed in full in the body of the volume, and it is therefore unnecessary to enter into details here.

Publications.—A reference has already been made to the various publications of the office and the distribution of Charts, Coast Pilots, Tide Tables, and Notices to Mariners during the year. But one bulletin was issued during the year, viz, No. 36, being a new edition of a Table of Depths in the Channels and Harbors along the Coasts of the United States. The information contained in this bulletin was compiled by the Chief of the Chart Division, and is very much in demand by the commercial and maritime interests.

The scientific papers published as appendices to the Annual Report will be specially noticed farther on.

EXPLANATION OF ESTIMATES.

The estimates submitted to the Secretary of the Treasury for the fiscal year 1899 were accompanied by the following explanations:

U. S. COAST AND GEODETIC SURVEY,
OFFICE OF THE SUPERINTENDENT,
Washington, D. C., September 30, 1897.

SIR: I have the honor to transmit herewith estimates of appropriations for 1898–99, for the United States Coast and Geodetic Survey.

All changes from the preceding appropriation bill have been explained by notes following the item in question.

Respectfully, yours,

W. W. DUFFIELD,
Superintendent.

The Honorable the SECRETARY OF THE TREASURY,
Washington, D. C.

TREASURY DEPARTMENT,
OFFICE OF THE COAST AND GEODETIC SURVEY,
Washington, D. C., September 29, 1897.

SIR: I have the honor to transmit herewith the estimates for the Office of Standard Weights and Measures for the fiscal year 1899, and beg to submit the following explanations in regard to changes recommended:

For the pay of the adjuster an increase of $300 is strongly urged as a just recognition of meritorious service. The same recommendation was made last year, but was not allowed by Congress.

The change in the designation of the assistant messenger to adjuster's helper is also recommended, for the reason that the present designation is not appropriate and prevents the office from securing the kind of help required. The duties required are miscellaneous in their character and include clerical and other work which the civil service rules do not permit messengers to perform, and as no increase in the compensation is asked for there would appear to be no valid objection to the change suggested.

The increase in the item for purchase of materials and apparatus and for contingent expenses is rendered necessary by the new work devolving on the Weights and Measures Office in connection with the construction and verification of electrical standards. Our outfit for this work is very meagre, and the immediate purchase of a number of new instruments is absolutely necessary. It is not intended, however, that this increase of appropriation should be continuous, but will apply only to the fiscal year 1899.

Yours, respectfully,

W. W. DUFFIELD,
Superintendent.

The Honorable the SECRETARY OF THE TREASURY.

ESTIMATES FOR THE FISCAL YEAR ENDING JUNE 30, 1899.

For every expenditure requisite for and incident to the survey of the Atlantic, Gulf, and Pacific coasts of the United States and the coast of the Territory of Alaska, including the survey of rivers to the head of tide water or ship navigation; deep-sea soundings, temperature, and current observations along the coast and throughout the Gulf Stream and Japan Stream

flowing off the said coasts; tidal observations; the necessary resurveys; the preparation of the Coast Pilot; continuing researches, and other work relating to terrestrial magnetism and the magnetic maps of the United States and adjacent waters, and the tables of magnetic declination, dip, and intensity usually accompanying them; and including compensation not otherwise appropriated for, of persons employed in the field work, in conformity with the regulations for the government of the Coast and Geodetic Survey adopted by the Secretary of the Treasury; for special examinations that may be required by the Light-House Board or other proper authority, and including traveling expenses of officers and men of the Navy on duty; for commutation to officers of the field force while on field duty, at a rate to be fixed by the Secretary of the Treasury, not exceeding $2.50 per day each; outfit, equipment, and care of vessels used in the Survey, and also repairs and maintenance of the complement of vessels; to be expended in accordance with the regulations relating to the Coast and Geodetic Survey from time to time prescribed by the Secretary of the Treasury and under the following heads: *Provided*, That no advance of money to chiefs of field parties under this appropriation shall be made unless to a commissioned officer or to a civilian officer who shall give bond in such sum as the Secretary of the Treasury may direct:

FOR FIELD EXPENSES:

For survey of unfinished portions of the Atlantic Coast from Maine to Florida, and for the necessary resurveys, especially of Chesapeake Bay and tributaries..... $35 000

[To the regular topographic and hydrographic work along the coast has now been added a detailed survey of the Chesapeake Bay. The earlier surveys were made fifty years ago, and great changes have taken place. This bay leads to the approaches of Washington and Baltimore, and now charts are needed from a commercial and strategic point of view.]

For survey of unfinished portions of the Gulf Coast, including Lake Pontchartrain and Sabine Lake, and for the necessary resurveys at the delta of the Mississippi and elsewhere 12 000

[Increase asked for necessary resurveys and with a view of doubling the force on Lake Pontchartrain in order to complete it next year if possible; additional parties will also be sent to resurvey the delta of the Mississippi.]

For triangulation, topography, and hydrography of the coasts of California, Oregon, and Washington, and for reconnaissance along the Pacific Coast from Cape Mendocino to the Straits of Juan de Fuca, and for necessary resurveys, San Francisco Harbor, triangulation, topography, and hydrography. 27 000

[The commercial development of the Western Coast now requires a primary triangulation through Oregon and Washington; the preliminary steps of this may be taken next year with slight increase in the appropriation.]

Continuing explorations in the waters of Alaska and making hydrographic surveys, including survey of the Aleutian Islands, of the Yukon River, including construction of flat-bottomed vessels for river navigation, of the mountain passes at the head of Lynn Canal, and for the establishment of latitude, longitude, and magnetic stations ($125 000 of which shall be immediately available)..... 150 000

[$100 000 will be required for the survey of the Yukon River, $25 000 for the mountain passes, and the remainder for the resurveys of the waters of Alaska, and for astronomical and magnetic work.]

For continuing the researches in physical hydrography relating to harbors and bars, including computations and plottings, and for tidal and current observations on the coasts of the United States.. 5 000

For off-shore soundings and examination of reported dangers on the coasts of the United States, and to continue the compilation of the Coast Pilot, and to make special hydrographic examinations, and including the employment of such pilots and nautical experts in the field and office as may be necessary for the same 10 100

To continue magnetic observations and to establish meridian lines in connection therewith in all parts of the United States 2 500

[A small additional amount will enable the magnetic party to lay out meridian lines for the use of county surveyors and engineers. This plan was tried and has been very successful.]

For continuing the line of exact levels between the Atlantic, Pacific, and Gulf coasts 3 500

For furnishing points to State surveys, to be applied as far as practicable to States where points have not been furnished, and for primary triangulation along the Rio Grande..... 13 500

[The items for State surveys and for the California-Nevada boundary have heretofore appeared together. The amount allotted, however, has always been insufficient to carry on both economically. It is now proposed to separate them and give the entire amount to State surveys, which is not more than necessary to furnish points to States requiring them.]

For surveying and temporarily marking that portion of the eastern boundary of the State of California commencing at and running southeastward from the intersection of the thirty-ninth degree of north latitude with the one hundred and twentieth degree of longitude west from Greenwich.... 10 000

[This work requires only one more season to complete it, and it is confidently believed that for the amount asked the boundary question may be settled.]

FOR FIELD EXPENSES—Continued.	
For determination of geographical positions, and to continue gravity observations	$2 500
For traveling expenses of officers and men of the Navy on duty, and for any special surveys that may be required by the Light-House Board or other proper authority, and contingent expenses incident thereto	3 400
For objects not hereinbefore named that may be deemed urgent, including the actual necessary expenses of officers of the field force temporarily ordered to the office at Washington for consultation with the Superintendent, to be paid as directed by the Superintendent, in accordance with the Treasury regulations	4 000
To enable the Government of the United States to pay, through the American embassy at Berlin, its quota as an adhering member of the International Geodetic Association for the Measurement of the Earth	1 500
For expenses of the attendance of the American delegate at the meetings of the International Geodetic Association	550
[Provided, that such expenses of attendance shall be payable out of the item "for objects not hereinbefore named," and 20 per cent of the foregoing amounts shall be available interchangeably for expenditure on the objects named; but no more than 20 per cent shall be added to any one item of appropriation.]	
In all, for field expenses	280 000
FOR REPAIRS AND MAINTENANCE OF VESSELS:	
For repairs and maintenance of the complement of vessels used in the Coast and Geodetic Survey, including the traveling expenses of the person inspecting the repairs	25 000
VESSEL FOR SERVICE IN ALASKA AND THE ALEUTIAN ISLANDS:	
For completing the steamer for the service in Alaska and the Aleutian Islands, the building of which the Secretary of the Treasury was authorized to contract for at a cost not exceeding $125 000, in addition to the $75 000 already appropriated, the further sum of	50 000
For the equipment and outfit of such vessel	30 000
NOTE.—Without this appropriation the vessel can not begin her work in the spring of 1899.	
SALARIES OF COAST AND GEODETIC SURVEY:	
For Superintendent	6 000
For pay of assistants to be employed either in the field or office, as the Superintendent may direct:	
For two assistants, at $4 000 each	8 000
For one assistant	3 200
For four assistants, at $3 000 each	12 000
For four assistants, at $2 500 each	10 000
For seven assistants, at $2 200 each	15 400
For seven assistants, at $2 000 each	14 000
For three assistants, at $1 800 each	5 400
For three assistants, at $1 600 each	4 800
For three assistants, at $1 400 each	4 200
For four assistants, at $1 200 each	4 800
For aids employed at a salary not greater than $900 per annum each	3 600
In all	91 400
PAY OF OFFICE FORCE:	
For one disbursing agent	2 200
For one general office assistant	1 800
For one chief of division of library and archives	1 800
For clerical force, namely:	
For two, at $1 650 each	3 300
For three, at $1 400 each	4 200
For six, at $1 200 each	7 200
For four, at $1 000 each	4 000
For chart correctors, buoy colorists, stenographers, writers, typewriters, and copyists, namely:	
For two, at $1 200 each	2 400
For three, at $900 each	2 700
For one	800
For seven, at $720 each	5 040
For one	600
For topographic and hydrographic draftsmen, namely:	
For one	2 400
For one	2 200
For two, at $2 000 each	4 000
For three, at $1 800 each	5 400

PAY OF OFFICE FORCE—Continued.

For topographic and hydrographic draftsmen, namely—Continued.	
For two, at $1 400 each	$2 800
For one	1 200
For two, at $1 000 each	2 000
For two, at $900 each	1 800
For one	700
For astronomical, geodetic, tidal, and miscellaneous computers, namely:	
For two, at $2 000 each	4 000
For three, at $1 600 each	4 800
For two, at $1 400 each	2 800
For two, at $1 200 each	2 400
For two, at $1 000 each	2 000
For copperplate engravers, namely:	
For three, at $2 000 each	6 000
For two, at $1 800 each	3 600
For two, at $1 600 each	3 200
For one	1 400
For two, at $1 200 each	2 400
For two, at $1 000 each	2 000
For four, at $900 each	3 600
For one	700
[This is done in order to advance an engraver hitherto receiving $500 to a salary of $700, proportionate to his skill.]	
For electrotypers and photographers, plate printers and their helpers, instrument makers, carpenters, engineer, and other skilled laborers, namely:	
For two, at $1 800 each	3 600
For one	1 600
For six, at $1 200 each	7 200
[NOTE.—The additional four men herein included are plate printers. The rate of $1 000 heretofore paid is below the standard rate paid for this work both in Bureau of Engraving and Printing and in private establishments.]	
The following item is reduced from ten to six by such transfer:	
For six, at $1 000 each	6 000
For two, at $900 each	1 800
For five, at $700 each	3 500
For watchmen, firemen, messengers, and laborers, packers and folders, and miscellaneous work, namely:	
For three, at $880 each	2 640
For six, at $820 each	4 920
For two, at $700 each	1 400
For three, at $640 each	1 920
For four, at $630 each	2 520
For four, at $550 each	2 200
For two, at $365 each	730
In all	137 470

OFFICE EXPENSES:

For the purchase of new instruments, for materials and supplies required in the instrument shop, carpenter shop, and drawing division, and for books, maps, charts, and subscriptions	7 700
For copper plates, chart paper, printer's ink, copper, zinc, and chemicals for electrotyping and photographing; engraving, printing, photographing, and electrotyping supplies; and for photolithographing charts and printing from stone and copper for immediate use	15 500
For stationery for the office and field parties, transportation of instruments and supplies, when not charged to party expenses, office wagon and horses, fuel, gas, electricity for lighting and power, telegrams, ice, and washing	6 000
For miscellaneous expenses, contingencies of all kinds, office furniture, repairs, and extra labor, and for traveling expenses of assistants and others employed in the office sent on special duty in the service of the office	4 200
	33 400
For the discussion and publication of observations	1 000
[That no part of the money herein appropriated for the Coast and Geodetic Survey shall be available for allowance to civilian or other officers for subsistence while on duty at Washington (except as hereinbefore provided for officers of the field force ordered to Washington for short periods for consultation with the Superintendent), or to officers of the Navy attached to the Survey, except as	

OFFICE EXPENSES—Continued.

now provided by law: *Provided, however*, That naval officers and others employed in Alaska be furnished with such outfits of clothing and stores and such additional allowance for subsistence as may be recommended by the Superintendent and approved by the Secretary of the Treasury.]

[NOTE.—This is done in order to provide extra clothing for those persons who may be obliged to winter in the severe climate of Alaska.]

PRINTING AND BINDING, COAST AND GEODETIC SURVEY:

For printing and lithographing, photolithographing, photoengraving, and all forms of illustration done by the Public Printer, on requisition of the Treasury Department, for the Coast and Geodetic Survey, namely:

Tide tables, coast pilots, appendixes to the Superintendent's annual reports, published separately; notices to mariners, circulars, blank books, blank forms, and miscellaneous printing, including the cost of all binding and covering; the necessary stock and materials and binding for the library and archives $20 935

NOTE.—No engraving is done by the Public Printer for the Coast and Geodetic Survey.

Total Coast and Geodetic Survey, exclusive of printing and binding 618 270

OFFICE OF CONSTRUCTION OF STANDARD WEIGHTS AND MEASURES:

Salaries, Office of Standard Weights and Measures—

For construction and verification of standard weights and measures, including metric standards, for the custom-houses, other offices of the United States, and for the several States, and mural standards of length in Washington, D. C.—

For one adjuster	1 800
For one verifier	1 500
For one mechanician	1 250
For one adjuster's helper	720
For one watchman	720
In all	5 990

Contingent expenses, Office of Standard Weights and Measures—

For purchase of materials and apparatus, and incidental expenses 2 500

[This increase is absolutely necessary in view of the new duty devolving on the Weights and Measures Office in connection with the construction and verification of electrical standards, and is designed mainly for the purchase of the necessary instruments and outfit.]

For expenses of the attendance of the American delegate at the meeting of the International Bureau of Weights and Measures, as provided for in the convention signed May 20, 1875, the sum of $475, or so much thereof as may be necessary 475

Total, contingent expenses, Office of Standard Weights and Measures 2 975

ABSTRACTS OF REPORTS FROM FIELD PARTIES, FISCAL YEAR 1897.

EASTERN DIVISION.

STATES EAST OF THE MISSISSIPPI RIVER.

1. Maine.
2. New Hampshire.
3. Vermont.
4. Massachusetts.
5. Rhode Island.
6. Connecticut.
7. New York.
8. New Jersey.
9. Pennsylvania.
10. Delaware.
11. Maryland.
12. District of Columbia.
13. Virginia.
14. North Carolina.
15. South Carolina.
16. Georgia.
17. Florida.
18. Alabama.
19. Mississippi.
20. Michigan.
21. Wisconsin.
22. Ohio.
23. Indiana.
24. Illinois.
25. West Virginia.
26. Kentucky.
27. Tennessee.

Progress sketches showing the localities of field work in the Eastern Division will be found at the close of Part I.

Connection of Mount Royal, near Montreal, Canada, with the primary triangulation of Vermont and New York.—In April, 1897, Assistant A. T. Mosman was directed to complete the primary triangulation of Vermont and New York and to extend it to Mount Royal, at Montreal, Canada. The scheme contemplated the occupation of Mount Royal for the measurement of the angle between the stations "Bellevue" and "Dannemora," in Vermont and New York, respectively, and the observation at "Mount Mansfield" of the lines to "Bellevue," "Dannemora," "Bigelow," "Blueberry Hill," and "Potato Hill." The inclusion of the stations "High Gate," "Mount Washington," and "Killington" was left to Assistant Mosman's judgment, it being necessary to learn something of the difficulties and the consequent amount of time and expense involved.

Assistant Mosman, accompanied by Assistant C. C. Yates, left Washington on the 19th of April and arrived at Montreal on the 25th. A tripod and scaffold signal 40 feet in height was erected on Mount Royal, and the station prepared for occupation. Meanwhile a signal pole was placed on "Mount Johnston," and heliotropers were posted by Assistant Yates on "Bellevue" and "Dannemora." Owing to continued cloudy and rainy weather no observations could be obtained until May 15, and from this date to June 15 only eight days occurred on which observations were possible. The station was completed on the 16th of June, and the party was then moved to Mount Mansfield. The part of the summit locally known as "the nose" was occupied, and for the erection of the piers for the instruments it was necessary to transport by hand up a steep cliff 300 feet high all the requisite materials, such as cement, sand, broken stone, lumber, and water. The instruments were mounted ready for observation by June 22, and meanwhile Assistant Yates was engaged in posting heliotropes at "Dannemora," "Bigelow," "Blueberry Hill," and "Killington" and erecting a signal pole at "Potato Hill." But one observation was obtained during the remainder of June, as the weather continued unfavorable, storms of rain, snow, and hail being followed by a hazy condition of atmosphere, which rendered the outlines of the mountains only 20 miles distant hardly distinguishable. The party being still in the field at the close of the year, the final statement of the results accomplished will be given in my next report.

Hydrography on the coast of Massachusetts, between Gloucester and Manchester.—Early in August, 1896, the steamer *Blake*, under the command of Lieut. Commander A. Dunlap, U. S. N., proceeded from New York, where she had been undergoing repairs, to the coast of Massachusetts, under instructions to execute a hydrographic survey of the region between Gloucester and Manchester. Work was begun on the 12th of August and continued until October 31, when it was completed. The work began at the limit reached by the *Bache* in 1895, and the same system of surveying was followed. The lines of soundings were usually run at intervals of 100 metres and crossed at right angles by another system of lines similarly spaced, but where channels or shoals required closer development such additional lines as were necessary were run. Special attention was given to the examination and development of known ledges and careful search was made for reported new ones. Lieutenant-Commander Dunlap reports the finding of an uncharted ledge about half a mile south-southeast of Kettle Island Ledge. This, coming within the limits of his hydrographic sheet, was carefully surveyed, but he was informed by Capt. William S. Douglas, of Magnolia, Mass., that several other uncharted ledges exist to the eastward, to the southward, and to the southward and westward of the one found.

Captain Douglas also reports an uncharted shoal, known as Saturday Night Shoal, in 8 fathoms of water and about 1 mile south-southeast of Kettle Island Ledge. These reported shoals and ledges, not falling within the limit of the projection furnished, were not investigated, but will receive early attention. Lieutenant-Commander Dunlap, on the completion of his survey, proceeded with his vessel to New York, arriving there on the 3d of November, and made immediate preparations for the taking up of hydrographic work in Chesapeake Bay. The *Blake* sailed from New York on November 12, and after encountering a severe gale off Winter Quarter light vessel, reached the new working ground in the vicinity of Baltimore Harbor entrance on the 15th.

The Chesapeake Bay work will be treated of in a separate paragraph in its proper geographical order.

The statistics of the Massachusetts coast work are as follows:

Area sounded, in square geographical miles	15
Number of miles (geographical) run while sounding	833½
Number of angles measured	12 593
Number of soundings taken	23 876
Number of tidal stations established	2
Number of specimens of bottom preserved	55
Number of hydrographic sheets finished	1

The naval officers attached to the party were as follows: Lieut. Commander A. Dunlap (in command), Lieut. J. A. Shearman, Ensign A. T. Long, Ensign J. H. Reid, Ensign H. A. Wiley, P. A. Surg. C. M. De Valin.

Continuation of the hydrographic resurvey of Buzzards Bay, Massachusetts.— At the close of the last fiscal year the party on schooner *Eagre*, under the command of Lieut. G. C. Hanus, U. S. N., was engaged on the hydrographic resurvey of the upper part of Buzzards Bay, and the statistics of the work to June 30, 1896, are given in my last report. The work was carried on continuously during the present year whenever the weather conditions permitted, and the party is still in the field. Much time was necessarily lost for field work during the winter months, but the accumulation of office work incident to a large season's work and the overhauling of boats and steam launches kept the party fully employed. Of the four hydrographic sheets furnished the party two have been completed and a third is well advanced. A large number of rocks and shoals required special examination and development, and, considering this fact and the further one that all the soundings had to be done from small boats and launches, the amount of work accomplished is very large. Lieutenant Hanus highly commends the zeal and energy displayed by all members of the party. The naval officers attached to the *Eagre* during the year were as follows: Lieut. G. C. Hanus (in command), Lieut. W. A. Edgar, Ensign J. F. Hubbard (detached April 20, 1897), Ensign H. A. Wiley (reported on board May 14, 1897), Chief Yeoman William B. Proctor, and Draftsman John T. Watkins (from July 21, 1896, to October 10, 1896). Seamen T. James, C. Cary, and S. Petersen served as recorders, and H. L. Wopschal served as tidal observer, all performing their duties in a satisfactory manner.

A full descriptive report accompanies Lieutenant Hanus's annual report, and much valuable

information and data for the new charts of this region are therein contained. The statistics of the year's work are given as follows:

Area sounded, in square geographical miles	38
Number of miles (geographical) run while sounding	2 629
Number of angles measured while sounding	31 310
Number of angles measured for determining buoys and signals	2 288
Number of soundings taken	198 563
Number of tidal stations established	7
Number of specimens of bottom preserved	14
Number of hydrographic sheets completed	2
Number of signals determined	144
Number of buoys determined	19

Continuation of the hydrographic resurvey of Buzzards Bay, Massachusetts.—Early in July, 1896, the steamer *Bache*, under the command of Lieut. Robert G. Peck, U. S. N., left New York for the purpose of executing a hydrographic survey of certain portions of Buzzards Bay, but was directed to stop en route to repaint the buoys of the Long Island Sound speed-trial course and determine and mark a position for the Nantucket South Shoal light-ship. The repainting of the trial-course buoys was completed on July 10, and Lieutenant Peck then proceeded to New London, Conn., to obtain from the Light-House Depot a buoy and sinker for marking the new position for the South Shoal light-ship. The necessary examination to the southward and westward of Phelps Bank was then made, and the new position for the light-ship was determined and marked by the 16th. This position was subsequently approved and adopted by the Light-House Board, and on the 17th of October the light-ship was successfully moved to the position recommended. Lieutenant Peck proceeded to New Bedford on July 17 and at once began the regular hydrographic work assigned him, which was laid out on four projections whose limits may be thus outlined: Sheets Nos. 1 and 2, on a scale of 1–10000, covered the southern part of Buzzards Bay from the vicinity of Woods Hole to a point about half a mile to the westward of Cuttyhunk; sheet No. 3, also on a scale of 1–10000, included the shores on the north side of the bay between the Dumpling Rock and Gooseberry Neck; sheet No. 4, on a scale of 1–20000, covered the central waters of the bay from a line drawn north-northwesterly from Woods Hole to the extreme western limit of the resurvey. Of these sheets Nos. 1 and 2 were completed during the season, and considerable work was done on No. 4, unfavorable weather preventing its completion. Sheet No. 3, from lack of time, was not begun. The season closed on the last day of October, and, in accordance with instructions, Lieutenant Peck then proceeded with his vessel to New York for repairs and for preparation for further service on the southern coast.

The following is the list of naval officers attached to the vessel during the season: Lieut. Robert G. Peck (in command), Ensign H. K. Hines, Ensign A. H. Davis, Ensign F. M. Russell, Master at Arms Thomas A. Martin, Yeoman J. L. Dunn, Asst. Surg. M. K. Johnson, P. A. Surg. Henry D. Wilson, Machinist A. J. Miskimon. Seamen John Craig, Jakob Jakobsen, and Andreas Andersen served as recorders, and Yeoman J. L. Dunn as draftsman.

The statistics of the season's work have been tabulated as follows:

Area sounded, in square geographical miles	17
Distance run while sounding, in geographical miles	948½
Number of angles measured	13 668
Number of soundings taken	44 166
Number of tidal stations established	3
Number of hydrographic sheets completed	2

Continuation of the topographical resurvey of Buzzards Bay, Massachusetts.—At the beginning of the fiscal year, Assistant Stehman Forney, in accordance with instructions, proceeded to New Bedford, Mass., for the purpose of completing the unfinished topographical sheets of the four parties of the previous year. He immediately organized two parties, one to be under his own immediate direction and the other under the charge of Mr. William Bowie, and the former began work in the vicinity of Marion, and the latter at Mattapoisett. The two sheets designated as the Sippican and Mattapoisett sheets were completed by the end of August, and the parties then moved to Horseneck Beach and Monument Beach, respectively, and began work on the unfinished Pada-

naram and Pocasset sheets. These were completed by the end of October, and Assistant Forney then took up the trigonometrical determination of light-houses in Buzzards Bay, and Mr. Bowie returned to Washington. On the completion of the light-house determinations the party was disbanded, and Assistant Forney, with a recorder, proceeded to Newburyport, Mass., where a plane-table survey of the docks and water front was made. This was finished by November, and Mr. Forney then returned to Washington and was assigned to office duty.

The recorders and rodmen assigned to the Buzzards Bay parties were James M. Griffin, James P. Keleher, Clarence Conard, Ross Hasbrouck, A. C. Forester, W. H. Halleck, John Lord Nisbet, and A. S. Tallman, and all rendered satisfactory service.

The statistics of the season's work are as follows:

Number of stations occupied for horizontal angles	7
Area of topography surveyed, in square statute miles	24
Length of coast line surveyed, in statute miles	34
Length of shore line of rivers and marsh line surveyed, in statute miles	48
Length of roads surveyed, in statute miles	88
Number of topographic sheets finished	5

Topographical survey of Naushon Island, Massachusetts.—Early in July, 1896, Assistant W. I. Vinal, in accordance with instructions dated June 23, proceeded to Naushon Island, Massachusetts, and organized a party for the completion of its topographical survey. The north end of the island was surveyed by Mr. Vinal in 1889, and the shore line of the southern portion had been run by another party in the fall of the same year. Field operations were begun on July 9, and continued to September 30, when the work was finished, the party disbanded, and Mr. Vinal returned to Washington. Naushon Island is the property of Hon. John M. Forbes, and is practically an extensive private park. It is stocked with deer and other game, and trespassing being strictly prohibited, it was necessary for the party to obtain a permit to go over the ground. This was secured without difficulty, however, and the party's headquarters were located at Tarpaulin Cove. Assistant Vinal reports that the contouring of the island was found complex and difficult on account of dense woods and extensive tracts of Scotch broom, the latter being almost impassible and seriously interfering with the rapid progress of the survey. Numerous carriage roads and bridle paths, however, cross the island in various directions, and these greatly facilitated a close inspection of the grounds, but added considerably to the details of delineation.

Messrs. R. E. Brinker, J. J. Carlisle, and J. L. Nisbet were attached to the party as recorders and rodmen, and rendered efficient service during the season. Assistant Vinal, after his return to Washington, was engaged in inking and lettering topographical sheets, and on miscellaneous duty, until again ordered to the field. His further services during the year will be noticed under the proper geographical headings.

The statistics of the Naushon Island work are as follows:

Area surveyed, in square statute miles	7¼
Creek and pond shore line surveyed, in statute miles	10
Length of roads surveyed, in statute miles	62
Number of topographical sheets completed	1

Special hydrographic examinations and surveys in Nantucket and Vineyard Sounds, and on the Coast of Rhode Island.—Early in October, 1896, Lieut. J. J. Blandin, U. S. N., in command of the steamer *Endeavor*, reached Nantucket Sound and in accordance with instructions proceeded to make certain special hydrographic examinations and surveys required to complete the charts of that locality and Vineyard Sound. A large tripod signal was erected on the eastern end of Tuckernuck Shoal, and after the occupation of the stations on Tuckernuck and Muskeget islands the sounding work began, and was continued at every favorable opportunity until completed. Examinations were made off Monomoy Point; on Horseshoe Shoal, to the northward of Cross Rip Light vessel, on Edward Shoal; to the eastward of Mortons Shoal; and to the northward of Hawes Shoal. Tides were observed, during the progress of this work, at Hyannis, and the gauge at this point was connected, by a week's simultaneous observations, with the one at Edgartown. The hydrographic examinations were rendered difficult by the scarcity and distance of signals, the hazy condition of the atmosphere, and the high winds which prevail at this season of the year. On the completion of the Nantucket Sound work the survey of Tarpaulin Cove, Vineyard

Sound, was taken up, a careful search being made for certain reported shoal spots. A hydrographic examination was then made off Sakonnet Point, Rhode Island, after which the *Endeavor* returned to New York, touching at New London, New Haven, and Hempstead Harbor en route. On the 9th of November she proceeded to Baltimore, where preparations were immediately made for further service of the Southern coast.

The statistics of the work in Nantucket and Vineyard Sounds are as follows:

Area sounded, in square geographical miles	14
Miles (geographical) run while sounding	232
Number of angles measured	2 442
Number of soundings taken	10 896
Number of tidal stations established	3
Number of hydrographic sheets finished	4

Topographical survey of Marthas Vineyard, Massachusetts.—In the spring of 1897 two topographical parties, under the direction, respectively, of Assistants W. C. Hodgkins and W. I. Vinal, were put in the field for the purpose of making a complete survey of Marthas Vineyard, Massachusetts, the interior of the island never having been surveyed by the Coast and Geodetic Survey. Assistant Hodgkins organized his party at Vineyard Haven early in May, and without delay the delineation of the topographical features was begun. At the close of the fiscal year fair progress had been made in spite of unfavorable weather conditions, and an area of about 7 square miles was completed. Assistant Vinal organized his party at Edgartown on the 7th of May, and he also at once began field operations, and at the close of the fiscal year had completed an area of about 8 square miles. The parties being still in the field, the full results and statistics are necessarily deferred, and will appear in the next year's report.

Determination of the geographical positions of light-houses in Narragansett Bay and Providence River, Rhode Island.—In June, 1897, Assistant D. B. Wainwright, in accordance with instructions, proceeded to Narragansett Bay and Providence River, for the purpose of determining the geographical positions of light-houses which have been erected subsequently to the execution of the triangulation of that locality. Incidentally he also made some trigonometrical determinations desired by the commandant of Fort Adams, near Newport, R. I. The work was still in progress at the close of the fiscal year, and the results and statistics will therefore appear in the next year's report.

Telegraphic longitude determinations and magnetic observations at Albany, N. Y., Cambridge, Mass., and Montreal, Canada.—To complete the scheme of primary longitude work of the United States and strengthen its connection with Greenwich, the lines Albany–Cambridge and Albany–Montreal were required, the latter point having been well determined (in 1892) relatively to Greenwich by cable exchanges of time signals by Prof. C. H. McLeod, of McGill University, Montreal, and Prof. H. H. Turner, of the Greenwich Observatory, the observers exchanging stations in the midst of the series. Assistants C. H. Sinclair and R. L. Faris were charged with the execution of this work, and the latter also with the determination of the magnetic elements at each station, and left Washington for Albany and Cambridge respectively on the 19th of August, 1896. At Albany Assistant Sinclair found the pier of 1891, in the ground of the Old Dudley Observatory, still in place, erected a wooden observatory over it, completed the necessary arrangements with the Western Union Telegraph Company, and was ready for observing by the 22d. Meanwhile Assistant Faris had prepared the Cambridge station, the granite pier used in the original trans-Atlantic work being used, and was also ready for observing, but on account of cloudy weather time observations were not obtained until the 25th. Signals were exchanged between the two stations on August 25, 26, 28, 29, and 30, and again after the interchange of observers on August 31, September 1, 4, 7, and 8. Assistant Sinclair then moved the Cambridge outfit to Montreal, where Prof. C. H. McLeod kindly placed at his disposal the observatory and transit pier of the McGill University, so that no time was lost in preparing a station, and Assistant Faris remained at Albany. Arrangements with the Western Union and the Great Northwestern Telegraph companies having been concluded, observations began at both stations on the 16th. Time exchanges between Albany and Montreal took place on September 16, 20, 24, 28, and October 9, and again after interchange of observers, on October 10, 15, 19, 21, and 26, the intervals between dates being caused by unfavorable weather.

After completing the line the Montreal instruments were taken by Assistant Faris to the New Dudley Observatory, Assistant Sinclair remaining at the Old for the purpose of connecting the two, which are about $7^{s}{\cdot}2$ apart in longitude. The method of conducting this work was slightly different from that ordinarily used, as it was desired to compare the differential chronometer rate derived from the time observations, which involved the personal equation of the observers, with that derived from the arbitrary signals, which is independent of the observers. This was accomplished by exchanging signals twice during the observations of the regular star list and by interchanging observers on alternate nights. The two differential rates were found to disagree, but further experiments showed that the differential rate derived from the arbitrary signals was uniform. In all, eighteen results for difference of longitude were obtained from eight nights' observations, viz, October 29, 30, 31, and November 1, 2, 7, 9, 10. This completed the longitude work of the season.

At Montreal a local triangulation was executed to connect the longitude station with Mount Royal, which is a point of the primary triangulation extending northward through the Hudson River and Lake Champlain valleys. A base 354 metres in length was measured by means of a steel tape belonging to the McGill University, and a gas-pipe signal 65 feet in height was erected on Mount Royal. Assistant Sinclair was also directed to occupy Mount Royal for the measurement of the primary angle at that point between "Bellevue" and "Dannemora," but bad weather prevented the execution of this part of the scheme.

Magnetic observations, declination, dip, and intensity, were made by Assistant Faris during the progress of the longitude work at Montreal, in the grounds of the McGill University, in the Old Dudley Observatory grounds at Albany, and at Hon. Verplanck Colvin's magnetic station, also in Albany. Two days' observations were made in each case.

On the completion of the work Assistants Sinclair and Faris returned to Washington, and were engaged on their computations and records until again assigned to field duty. Their further services during the year will be mentioned under the proper geographical headings.

Continuation of the hydrographic surveys to the southward of Block Island Sound and off Montauk Point, and special examinations at various points.—At the close of the last fiscal year the party of the steamer *Endeavor*, under the command of Lieut. W. S. Benson, U. S. N., was engaged on the hydrographic surveys off Montauk Point and to the southward of Block Island Sound, and the progress to that date has already been reported. The work was continued during the present fiscal year and was completed by September 24. Lieutenant Benson, however, was relieved of the command of the vessel on August 15 and was succeeded the same day by Lieut. J. J. Blandin, who was previously serving in the party. Special hydrographic examinations were also made off Brightmans Beach, Rhode Island, near buoy No. 14, in Fishers Island Sound, and in Greenport Harbor, Long Island. Lieutenant Blandin's report of the season's work contains much valuable data for the correction and bringing up to date of the charts of the localities surveyed and examined.

The naval officers attached to the *Endeavor* during the season were as follows: Lieut. W. S. Benson (in command until August 15, 1896), Lieut. J. J. Blandin (in command from August 15 to close of the work), Ensign I. K. Seymour (joined the vessel September 5), Ensign C. A. Brand (joined the vessel August 17), Pay Yeoman C. Lee Green, Machinist J. C. Richards, and Writer Elijah H. Phinney.

The statistics of the work may be summarized as follows:

Area surveyed, in square geographical miles	373
Miles (geographical) run while sounding	764
Number of angles measured	3 239
Number of soundings taken	10 051
Number of tidal stations established	3
Number of current stations occupied	3
Number of specimens of bottom preserved	185
Number of hydrographic sheets completed	3

On the completion of the work the *Endeavor* proceeded to Nantucket Sound for the purpose of making further surveys and special hydrographic examinations in that locality and in Vineyard Sound.

This work has been noticed in the preceding paragraph.

Continuation of the topographical resurvey of the south shores of Long Island, New York.—On July 1, 1896, Assistant C. T. Iardella, in accordance with previous instructions, proceeded to Long Island, accompanied by Aid H. C. Denson, and organized a party for the continuation of the topographical resurvey along its southern shores. Operations were begun July 5 near Canoe Place, where the previous season's work terminated, and the survey was continued eastward to Amagansett, where the party was disbanded October 15. The strip of topography executed varies from a quarter of a mile to 2 miles in width, and embraces an area of about 26 square miles, and was delineated on a scale of 1–10000 on four topographical sheets.

The actual shore line and a narrow fringe of topography adjacent thereto had been previously surveyed and does not therefore form a part of the present season's work. Assistant Iardella highly commends the valuable service rendered by Aid H. C. Denson, who, during a considerable portion of the season, on account of his chief's ill health, was practically in charge of the conduct of the work.

The statistics of the season are given as follows:

Area surveyed, in square statute miles	25¼
Length of general coast line surveyed, in statute miles	9
Length of creek shore line surveyed, in statute miles	4½
Length of pond shore line surveyed, in statute miles	10
Length of roads surveyed, in statute miles	118¼
Number of topographical sheets completed	4

Messrs. Iardella and Denson returned to Washington at the close of the season's work, and were engaged on their office work until assigned to other duty. The further field services of Mr. Denson will be mentioned under the proper headings elsewhere in this report.

Continuation of the tidal record and the automatic tidal indicator at Fort Hamilton, New York Harbor.—The self-registering tide gauge at the Fort Hamilton tidal station, established in December, 1892, has continued in successful operation throughout the entire fiscal year, and an unbroken record has been received. Tidal Observer J. G. Spaulding has continued in charge of the station, and, as heretofore, has made the monthly tabulations and forwarded them with the original maregrams to the office. Mr. Spaulding has also had charge of the tidal indicator, which has continued to work satisfactorily.

Extension of the transcontinental arc eastward to capes May and Henlopen.—The party of Assistant F. W. Perkins, engaged on the reconnaissance and triangulation to extend the transcontinental arc eastward to capes May and Henlopen, took the field in the latter part of the previous year, and an account of the progress made to June 30, 1896, is given in my last report. The work was continued in the present year and progressed satisfactorily until August, when an unusually long-continued period of unfavorable weather set in and very much retarded the observations. Many of the lines of the triangulation were from 20 to 28 miles in length, and these could only be observed on rare occasions, on account of the persistent hazy and smoky condition of the atmosphere. Assistant Perkins reports that the average number of days per month on which observations were possible was only eight, although heliotropes, and finally night signals, were used to facilitate operations. Four observers, viz, Assistants F. W. Perkins, W. B. Fairfield, and John Nelson, and Extra Observer G. A. Fairfield, took part in the work, so that four stations were occupied simultaneously, thus much reducing the time and cost of the survey. The cyclone which swept over the country in September destroyed four of the observing towers and did much damage to the lofty signal poles of several stations, but a judicious redistribution of the observers prevented any serious interruption of the observations, although the labor and expenses of the construction party, under the charge of Foreman Jasper S. Bilby, were much increased. Assistant John Nelson was relieved from duty in the party in December, as his services were then required in the survey of Lake Pontchartrain. By January 20 the observations at all stations excepting two were completed, and Assistant Perkins was then granted a furlough to enable him to attend to personal business affairs in Europe, the charge of the party then devolving upon Assistant W. B. Fairfield. The weather during January and February was cold, stormy, and generally unfavorable for observations on high signals, but the work was finally completed on the 17th of February and the party disbanded. Assistant W. B. Fairfield and

Extra Observer G. A. Fairfield returned to Washington, and were engaged on their computations and other office work, the former until March 16, when he was assigned to field duty on the oblique arc in Alabama, and the latter to the close of the fiscal year. Assistant F. W. Perkins, on the expiration of his furlough, reported for duty on the 2d of June, and from that date to the close of the fiscal year was also engaged on the computation of the season's results. The statistics furnished by Assistant Perkins include the work of the whole season, viz, from April, 1896, to February, 1897, and are as follows:

Area of reconnaissance executed, in square statute miles	1 700
Number of old points recovered	9
Number of new primary points selected	18
Number of towers erected and reerected	13
Average height of towers, in feet	100
Number of tripod signals erected and reerected	5
Number of poles erected and reerected	19
Average height of poles above towers, in feet	102
Number of stations occupied for horizontal directions	16
Number of directions determined	287
Number of points determined	66
Number of pointings made	16 597
Area of triangulation executed, in square statute miles	1 970

Continuation of the tidal record and the automatic tidal indicator at Reedy Island, Delaware River.—The automatic tital indicator at Reedy Island Quarantine Station, Delaware River, established in January, 1896, has continued in successful operation during the fiscal year. The tidal record, by means of a self-registering tide gauge erected at the same station, has also been continued, but several bad breaks have occurred during the year. The tidal station and indicator are under the direction of Dr. A. H. Glennan, of the Marine-Hospital Service.

Telegraphic determination of the difference of longitude between Washington, D. C., and Dover, Del.; also latitude and magnetic determinations.—In the latter part of April, 1897, Assistants C. H. Sinclair and O. B. French were directed to determine the difference of longitude between Washington, D. C., and Dover, Del., connect the Coast and Geodetic Survey Station and the New Naval Observatory, and make incidental latitude and magnetic observations. On May 1, Assistant O. B. French proceeded to Dover and prepared the station in the usual manner, Assistant C. H. Sinclair meanwhile occupying the Coast and Geodetic Survey Observatory. Unfavorable weather prevented observations before the 7th, and the first exchange of signals was made on that date. Further exchanges were obtained on May 8, 9, and 15, bad weather again intervening from the 10th to 14th. The observers then interchanged stations, and observations were made on May 17, 18, 19, and 20. The longitude station at Dover was located in the grounds adjoining the county court-house and was subsequently connected with the court-house cupola, a point of the primary triangulation. At Dover, Assistant French determined the magnetic declination, dip, and intensity on two days (May 7 and 8), and Assistant Sinclair determined latitude by sixty-seven observations on seventeen pairs of stars, during four nights, using a zenith telescope and the Talcott method.

This latitude and an examination of the country south of Dover for the selection of a suitable site for a station for observing variation of latitude will be mentioned in another paragraph under the head of Special Operations.

On the completion of the Dover work, Messrs. Sinclair and French determined the difference of longitude between the Coast and Geodetic Survey Observatory and the New Naval Observatory, both stations having previously been connected with the Old Naval Observatory. Signals were exchanged on the nights of May 25, 26, 27, and 29, and again, after the usual interchange of observers, on June 1, 2, and 5. Cloudy weather then setting in, the fourth night in the second series was dispensed with, especially as the observations obtained were very accordant and highly satisfactory. Assistant French then determined the latitude at the New Naval Observatory Station by ninety-eight observations on twenty pairs of stars during six nights, the point of observation being finally referred to the center of the clock room of the Observatory. Messrs. Sinclair and French were then engaged on office duty, the former until June 20, when he was again assigned to field duty, and the latter, until the close of the fiscal year.

Continuation of the tidal record at the tide-gauge station at the United States Navy-Yard, Washington, D. C.—The self-registering tide gauge established in 1891 at the Washington Navy-Yard tidal station has been kept in successful operation throughout the entire fiscal year, and a continuous record has been obtained. As heretofore, the gauge has been under the charge of the chief of the tidal division of the office.

Resurvey of Chesapeake Bay and tributaries—Triangulation of Patapsco River and upper part of bay from Kent Island to Pooles Island.—A resurvey of Chesapeake Bay having become necessary on account of the numerous and extensive changes that have taken place since the old survey, arrangements were made to execute the work as rapidly as possible, and several parties have been engaged on this duty during the present year. The triangulation of the portion from Kent Island to Pooles Island and of Patapsco River was assigned to Assistant D. B. Wainwright, who took the field early in July, 1896. As far as possible the points determined in the original triangulation were to be utilized, but in many cases these had been obliterated by the erosion of the shores, or destroyed by thoughtless or malicious persons. A sufficient number, however, were recovered to serve as a basis for the new work and to permit of the rapid determination of tertiary points for the topographical and hydrographical parties. Assistant Wainwright first made a reconnaissance of the river for the recovery of old points and the location of new ones, and then erected the necessary signals. This was completed by the end of the month, at which time he was joined by Messrs. R. B. Derickson, F. F. Weld, and F. Douglas Sheetz, who had been assigned to the party as recorders.

The triangulation naturally divided itself into two classes, that of the bay, with lines of sight from 5 to 18 miles in length, and that of the river, with lines varying from 1 to 4 miles. An effort was made to so arrange the work that the best weather should be utilized on the long lines and the shorter ones being observed at any convenient interval, but unfortunately the atmospheric conditions were uniformly unfavorable throughout the season. The thick haze which constantly prevailed formed an insuperable obstacle to the rapid prosecution of the work and proved very trying to the observers. The triangulation of the river from Fort Carroll to the mouth presented no great difficulties, the lines being short, but the bay work was much retarded by the unfavorable weather conditions already mentioned. The scheme of triangulation followed very closely that of the original survey of fifty years ago, but in most cases the old points were not recovered. Special attention was given to the marking of the new stations, so as to insure as far as possible their permanency and consequent availability for use in the future, and positions of points were furnished as promptly as was practicable to the topographic and hydrographic parties working in the vicinity. The triangulation of the bay was connected with that of the transcontinental arc by observing upon "Linstid" and "Clough," two stations of the latter, from four of the bay stations, and upon "Turkey Point" and "Still Pond" from "Pooles Island." The whole area covered by the triangulation presents little relief, and in consequence many buildings and other objects which would constitute natural signals for the topographer are masked by trees and are invisible from the principal stations, but as many as were practicable were determined in lieu of temporary artificial signals. At North Point, which is noted for its miasmatic conditions, several members of the party suffered from malarial affections, and Assistant Wainwright was so ill that he was compelled to apply for relief from duty for a period of two weeks, and Assistant W. C. Hodgkins was detailed to take charge of the party during his absence. The season closed on the 9th of December, all the work laid out for the party having been completed except a portion of the observations at "Millers Island" which were not obtainable on account of the length of the lines and the impenetrable haze. The party was disbanded, and Messrs. Wainwright, Derickson, Weld, and Sheetz returned to Washington, Foreman John Kenney remaining two days longer to attend to the proper housing of the naphtha launch used for the transportation of the party on the field.

Assistant Wainwright in his report commends all members of the party for the zeal and efficiency displayed in the execution of their respective duties, and attributes much of the success achieved in spite of adverse circumstances to their hearty and intelligent cooperation.

The statistics of the season's work are given as follows:

Area of triangulation executed, in square statute miles	150
Number of signal poles erected	14
Number of tripod and observing scaffolds built	3
Number of stations occupied for horizontal angles	14
Number of geographical positions determined	35

Assistant Wainwright was engaged on miscellaneous duty at the office until again assigned to field duty. His further services in connection with the laying out of the Chesapeake Bay speed trial course will be mentioned under the head of Special Operations.

Resurvey of Chesapeake Bay and its tributaries—Hydrography in the vicinity of Baltimore Harbor entrance.—The steamer *Blake*, under the command of Lieut. Commander A. Dunlap, after the completion of surveys on the coast of Massachusetts, proceeded to Chesapeake Bay for the purpose of making a hydrographical resurvey of the vicinity of Baltimore Harbor entrance, and reached Baltimore on the 15th of November, 1896. Preparations for the execution of the survey were at once made, the first requirement being the establishment of a tidal station; Bodkin Point and Seven Foot Knoll light-house, both proving unsuitable or impracticable, Sparrow Point was finally selected, and there the tide gauge was set up and a reference bench mark established. The sounding work was then commenced and was carried on until the end of December, when the severe cold weather compelled a temporary cessation. The work was resumed as soon as the weather conditions permitted and was still in progress at the close of the fiscal year. From March 17 to April 24, however, the work was interrupted by the laying out of the speed trial course (described under the head of Special Operations), and from June 21 to 26, inclusive, by the attendance of the *Blake's* party at the speed trial of the torpedo boat *Foote*.

The statistics of the work from November 16 to the close of the fiscal year are tabulated as follows:

Area sounded, in square geographical miles	41
Distance run while sounding, in geographical miles	828
Number of angles measured	7 549
Number of soundings taken	41 761
Number of tidal stations established	5
Number of specimens of bottom preserved	1
Number of hydrographic sheets worked upon	3

It should also be mentioned that in order to obtain a sufficient number of points for the execution of the hydrography, it was necessary to determine them by triangulation, as many of the stations of the old survey have been lost or obliterated. Ten observing tripods and scaffolds from 25 to 40 feet in height were erected, and from them and four additional stations horizontal angles were measured with a theodolite.

The naval officers attached to the *Blake* during the work were as follows: Lieut. Commander A. Dunlap (in command), Lieut. J. A. Sherman (until January 8, when he was detached), Ensign J. H. Reid, Ensign H. A. Wiley (until May 11, when he was transferred to the *Eagre*), Ensign F. B. Sullivan (from June 9 to June 30), Ensign Powers Symington (from May 7 to June 1).

Resurvey of Chesapeake Bay—Triangulation and topography of Chester River, Maryland.—Early in the fiscal year Assistant J. A. Flemer was detailed to make a secondary triangulation of Chester River, Maryland, from Deep Point to the mouth, to connect the same with the triangulation of Chesapeake Bay, and to execute a topographical survey over the same limits. Leaving Washington on the 11th of July, Assistant Flemer, after purchasing in Baltimore the necessary signal material, proceeded to East Neck Island, Kent County, Md., to make a rapid reconnaissance and to select a suitable stopping place for his party, and was there joined on the 13th by Messrs. G. W. Nelson, F. C. S. Hunter, and J. M. Slemons, who had been assigned to him as recorders and rodmen.

By July 27 the signals needed for the work were located and erected, and the observation of horizontal angles was begun the following day at "Deep Point" station, the uppermost one of the Chester River series. By August 27 the eighteen stations comprising the scheme were all occupied and "Love Point" was reached. It was expected that by the time these observations were completed the party under Assistant D. B. Wainwright would have reached the mouth of the Patapsco and determined the line "Bodkin Point"–"Swan Point" as a base for the Chester River scheme, but delays caused by unfavorable atmospheric conditions had occurred, and the length and position of the required line was not yet determined. To avoid further delay Assistant Flemer accepted the line "Bodkin Point"–"North Point" in lieu of the desired base, and reoccupied the terminal stations of his scheme for the additional angles necessary to make the new connection. The computation of the triangulation was then made as rapidly as possible, and

meanwhile Mr. G. W. Nelson was engaged in permanently marking the station points. The topographical work was begun on the 16th of September and carried on continuously until the 25th of November, when the setting in of inclement weather compelled the disbandment of the party. Assistant Flemer, after spending the remainder of the month in making descriptions and sketches of the triangulation stations, returned to Washington, where he was engaged on office work and computations until again assigned to field duty. In his report Mr. Flemer states that the weather during the season was generally favorable for topographic work, but that the smoky and hazy condition of the atmosphere greatly retarded the triangulation, especially when the longer lines of the Chesapeake Bay proper were reached.

The statistics of the season's work from July 13 to December 2 are as follows:

Area of triangulation, in square statute miles	150
Number of signals erected	17
Number of stations occupied for horizontal measures	18
Number of geographical positions determined	27
Area of topography surveyed, in square statute miles	14
Length of river and coast shore line surveyed, in statute miles	58
Length of pond and creek shore line surveyed, in statute miles	13
Length of roads surveyed, in statute miles	31
Number of topographic sheets finished	4

The resumption of the work in the spring of 1897 will be found noted in the next paragraph.

Resurvey of Chesapeake Bay—Resumption of the topographical survey of Chester River, Maryland, in the spring of 1897.—In the latter part of April, 1897, Assistant J. A. Flemer was directed to resume work on the topographical resurvey of Chester River, Maryland, and accordingly, on the 4th of May, proceeded to East Neck Island for that purpose. The party was immediately organized, and Boyles Landing was chosen as headquarters as being centrally located for the unfinished areas. Actual field work began on the 7th and was continued to the end of the fiscal year, at which time the party was still in the field and making good progress. Messrs. Howard D. Humiston, Thomas E. Cottmann, and Buford Lynch served as recorders and rodmen, and Capt. C. L. Watkins furnished the party with transportation, all performing their respective duties in a very satisfactory manner. The party being still in the field, the complete statement of results is necessarily deferred, but the following partial statistics showing the work accomplished to June 30 have been furnished by Assistant Flemer:

Area of topography surveyed, in square statute miles	12
Length of river shore line surveyed, in statute miles	40
Length of creek shore line surveyed, in statute miles	9
Length of roads surveyed, in statute miles	21

Resurvey of Chesapeake Bay—Triangulation from the mouth of the Potomac River northward.—In March, 1897, the Navy Department having requested the determination of a speed trial course in Chesapeake Bay, the necessary triangulation was assigned to Assistant D. B. Wainwright, who was instructed to make the work of such a character that it would be available for and form part of the regular scheme for the resurvey of Chesapeake Bay, thus accomplishing a double object. This duty occupied Mr. Wainwright and his aid, R. B. Derickson, from March 17 to April 25, and a detailed account of the work will be found in connection with the description of the laying out and marking of the trial course under the head of Special Operations.

Resurvey of Chesapeake Bay and its tributaries—Hydrographic survey of the southern branch of Elizabeth River, erection and determination of signals at Baltimore entrance, and current observations at various points.—Early in July, 1896, Lieut. E. H. Tillman, U. S. N., assumed command of the schooner *Matchless*, which had been rebuilt at Baltimore, and organized a party for the hydrographic survey of the water front of the southern branch of Elizabeth River. Sailing from Baltimore on the 19th, Norfolk was reached on the 23d, and the erection of signals and the establishment of a tide gauge were at once undertaken. The sounding work began on the 11th of August and was completed by the 26th. The statistics of this work are as follows:

Number of miles of sounding lines run	264
Number of angles measured	1 058
Number of soundings taken	2 509

From September 5 to October 23 the party was engaged in rendering assistance in signal building and in furnishing transportation to the triangulation party under the charge of Assistant J. B. Baylor. On the 24th of October Lieutenant Tillman with his vessel proceeded to Baltimore and immediately began the construction and determination of signals for the resurvey of Baltimore entrance. This work was completed on November 16, and preparations were then made for a systematic series of current observations in Chesapeake Bay. The actual observations began on the 5th of December, but in a few days were discontinued on account of the lateness of the season and the setting in of very inclement weather. The *Matchless* reached Washington on the 13th of December and remained until March 16, a hasty survey of the Washington Navy-Yard water front being made on the 13th. From March 16 until April 18 the party assisted in the laying out of the 24½ mile speed trial course in Chesapeake Bay, a full account of which will be found under the head of Special Operations, and then resumed the current observations in the vicinity of North Point, the tide gauge for the reduction of the work being previously located at Sparrow Point. On the completion of this station similar observations were made until June 16 at a station 3⅝ miles east of Seven Foot Knoll Light, and subsequently at a channel station nine-tenths of a mile east by south from Sandy Point Light. The observations at the latter station were still in progress at the close of the fiscal year.

The following named officers comprised the party of the *Matchless*: Lieut. E. H. Tillman (in command), Naval Cadet A. J. Wadhams, Nautical Expert John Ross (detailed from the office August 2 to August 28), Pay Yeoman A. B. Camerden, and Ship's Writer J. W. Clift. Pay Yeoman A. B. Camerden served as recorder, and Ship's Writer J. W. Clift and Carpenter's Mate Matt Solvin served as tidal observers.

Resurvey of Chesapeake Bay—Triangulation of southern portion.—On the 24th of July, 1896, Assistant J. B. Baylor was directed to proceed to the lower part of Chesapeake Bay, for the trigonometrical determination of the geographical positions of lighthouses and other prominent objects available for use in the topographic and hydrographic resurvey. Work was begun at Cape Henry, where both the old and new lighthouse towers were occupied, and angles of the main scheme were measured. A number of subsidiary points were also observed upon and the two towers were connected by a small triangulation, from a base of 250 metres measured for the purpose.

The lighthouses at Old Point Comfort, Back River, and Cape Charles were then occupied in succession, the progress of the work, however, being seriously retarded by the same unfavorable weather conditions experienced by the other parties operating in this section of the country. The following additional lighthouses were observed upon but not occupied, as well as a number of prominent objects and artificial signals: Thimble Shoal, Old Plantation, Cape Charles (old), Newport News, Nansemond River, New Point Comfort, and York Spit. From September 5 to October 23, Lieut. E. H. Tillman, U. S. N., in command of the schooner *Matchless*, assisted in erecting signals and searching for stations of the old triangulation, and furnished transportation to the party, having been directed to report to Assistant Baylor for that purpose.

The last observations at the new lighthouse at Cape Charles were made on the 14th of November, and efforts to prosecute the work after this date proved futile, on account of the smoky and hazy condition of the atmosphere. The season's work was therefore closed on the 7th of December, and Assistant Baylor returned to Washington, where he was engaged on his office work and computations until again assigned to field duty.

Latitude and magnetic determinations at Roundhill and Leesburg, Va.—On June 21, 1897, Assistant C. H. Sinclair, in accordance with instructions, proceeded to Roundhill, Va., for the purpose of determining latitude and the magnetic declination, dip and intensity. Similar observations were then made at Leesburg, Va., and at the latter place stones were set to mark a meridian line. The magnetic observations occupied two days at each station. The latitude observations being primarily for the selection for the International Geodetic Association of a suitable station for the continued observation of variations of latitude, will be mentioned at greater length under the head of Special Operations.

Magnetic determinations and establishment of meridian lines at various points in the State of Virginia.—On May 1, 1897, Assistant J. B. Baylor, in accordance with instructions, proceeded to

Richmond, Va., for the purpose of determining the magnetic declination, dip and intensity, and establishing a meridian line for the benefit of local surveyors in testing and adjusting their compasses. The ends of the meridian line were permanently marked by granite posts.

Similar determinations of the magnetic elements were then made at Accomac Courthouse, Norfolk, and Greenville Courthouse, and meridian lines similarly marked were also established at each of the points named. On the completion of this duty, on May 29, Assistant Baylor returned to Washington, and was engaged on office work and computations until the close of the fiscal year.

Continuation and completion of the tidal record at Port Royal, S. C.—The series of tidal observations, by means of the self-registering tide gauge, set up in April, 1896, at the Port Royal Naval Station, was continued during the present fiscal year until April, when it was completed. The tidal station was in charge of Mr. B. W. Weeks, who has now been transferred to the new tidal station at Fernandina, Fla.

Hydrographic resurvey of Savannah River entrance.—In January, 1897, the steamer *Endeavor*, under the command of Lieut. J. J. Blandin, U. S. N., having fitted out in Baltimore sailed for Savannah, Ga., for the purpose of making a resurvey of the outer bar and the entrance to the Savannah River. From January 21 until February 8 the party was engaged in building and locating signals, determining positions of buoys and establishing tide gauges, and on the 9th the regular sounding work was begun. The area surveyed extends from outside the bar to the jetties and embraces the shoals to the northward and southward of the channels. The entrance to Calibogue Sound as far as Braddock Point was also surveyed. Considerable changes in the shore line have occurred since the old survey and numerous changes in the shoals to the southward and eastward of Braddock Point, to the southward and eastward of Daufuskie Island, and to the eastward of Tybee Island, are reported. The great amount of stormy and foggy weather seriously retarded the progress of the work, and prevented as thorough an examination of the shoals as would otherwise have been made, but the data secured are believed to be sufficient for the interests of navigation. The season's work closed on the 29th of April and the party returned to Baltimore on the 4th of May.

The statistics of the Savannah River entrance work are as follows:

Area sounded, in square geographical miles	84
Number of miles (geographical) run while sounding	519
Number of angles measured	4 526
Number of soundings taken	27 572
Number of tidal stations established	5
Number of topographical sheets completed	1

The *Endeavor* is now en route to Buzzards Bay, Massachusetts, having left Baltimore on June 28, and is now commanded by Lieut. Commander C. F. Forse, U. S. N., who relieved Lieutenant Blandin June 18.

Resurvey of Brunswick Bar, Georgia.—In accordance with the provisions of the river and harbor act of June 2, 1896, a resurvey of the outer bar of Brunswick Harbor, Georgia, under the direction of the honorable the Secretary of War, by an officer of the Coast and Geodetic Survey, was required, and Lieut. Robert G. Peck, U. S. N., in command of the steamer *Bache*, was selected for this duty. For an account of the work see under the head of Special Operations.

Geodetic connection of the Atlantic and Gulf coasts of Florida.—In the latter part of December, 1896, Assistant Herbert G. Ogden was directed to proceed to Florida for the purpose of connecting the triangulation of the east coast, in the neighborhood of Fernandina or Jacksonville, with that of the west coast at or near Cedar Keys. The method of accomplishing this, by a scheme of triangulation or by a traverse line checked and controlled by astronomical azimuths, was to depend upon the physical conditions of the country, and a reconnaissance was therefore necessary to determine which was the most feasible and practicable. Mr. Ogden left Washington on the 31st of December and reached Jacksonville the following day, and was there joined by Aid H. C. Denson, who had been assigned to the party. The old trigonometrical stations "McGirts Creek" and "Big Creek" were recovered without difficulty, and the party was then organized on January 5 at Baldwin Junction. A preliminary examination of the country developed the fact that the

opening of many lines through heavy timber would be necessary to carry out a scheme of triangulation, and that the labor and expense would consequently be very great. Further investigation showed that the roadbed of the railway afforded favorable opportunities for a traverse line, and for direct measures of distances by means of a standardized steel tape. Some experimental measures were made over a distance of 3 miles, the tape being laid on the rails, to determine the most favorable conditions, and whether by this method the requisite degree of accuracy could be obtained. It was found that the results were very satisfactory during cloudy weather, but much less so during bright sunshine, and it was subsequently decided, therefore, to make all the measures at night. Meanwhile, two lines, 3½ and 4½ miles in length, had been opened from "Big Creek" to the railroad, and to save the time and expense incident to reobserving the line "McGirts"–"Big Creek" the work was based on "Big Creek" alone, the geographic position being carried forward through an astronomical azimuth measured at Baldwin. Assistant A. L. Baldwin joined the party on the 1st of February and Mr. H. F. Flynn about the middle of March, and both rendered valuable assistance in the prosecution of the work, which was finally closed at Gainesville on the 24th of April. The distance traversed from Baldwin to Gainesville was 52 miles, divided into kilometre sections, each section being measured at least twice. The measures were compared at each kilometre, and the discrepancies were generally less than one centimetre, and, further, it was found that the tendency throughout was for errors to compensate, the signs + and — being about equally distributed. The accumulated discrepancy in the double measure of the 80 kilometres was only 12·1 centimetres. Assistant Ogden states that the greatest source of error in such measures is undoubtedly the uncertainty in the length of the tape, and that if this could be eliminated the resulting distance would be known within its one one-hundred-thousandth part. Including this and all other known sources of error, however, he still claims that the distance measured is known within its one thirty-thousandth part, a degree of accuracy at least equal to that obtainable from a small triangulation. At Gainesville the work was connected with the court-house spire, which had previously been referred to an astronomical station, and the levels brought up from Jacksonville were referred to the primary bench mark R of the precise level line. The azimuth of the traverse line was further checked by a new azimuth measured at Waldo, the agreement of the latter with that brought forward from Baldwin proving very satisfactory. Assistant Ogden, in his report, highly commends the services rendered by Messrs. Baldwin, Denson, and Flynn, whose zeal and energy contributed much to the success of the work. He also acknowledges his obligations to the officials of the Florida Central and Peninsular Railroad for many courtesies and privileges extended, which greatly facilitated the operations of the party.

The statistics of the season's work have been tabulated as follows:

Area of triangulation, in square statute miles	10
Number of observing tripods and scaffolds built	9
Number of signal poles erected	1
Number of stations occupied for horizontal angles	17
Number of geographical positions determined	12
Length of double tape measurements, in kilometres	80¼
Distance leveled, with gradienter, in statute miles	70
Number of azimuths observed	2

On the completion of the work at Gainesville the party was disbanded, and Assistant Ogden and Messrs. Denson and Flynn returned to Washington, while Assistant Baldwin was detailed, in accordance with instructions, to attend to the establishment of a tidal station and the erection of a self-registering tide gauge at Fernandina, Fla. The account of the work will be found in the next paragraph.

Establishment of a tidal station at Fernandina, Fla.—In the latter part of April, 1897, Assistant Herbert G. Ogden, on the completion of the peninsular work above described, detailed Assistant A. L. Baldwin to attend to the establishment of a permanent tidal station at Fernandina. Mr. Baldwin reached Fernandina on the 29th, and immediately made a reconnaissance of the water front for the selection of a suitable site for the station, the old site at the foot of Beech street being impracticable because of extensive improvements about to be made, and also on account of the continued shoaling of the east side of the river. The most suitable site was found to be at the south end of the Florida Central and Peninsular Railroad wharf, at the foot of Dade

street, and through the kindness of the officials of the company he was permitted to utilize this point. A small tide house was erected without delay, and the self-registering gauge was set up within it and put in working order by May 8. The station was then placed in charge of Tidal Observer B. W. Weeks, who had arrived a few days previously, and the series of observations was begun. A tide staff was also prepared and fastened securely to a pile, the relation of its zero to that of the automatic gauge being accurately determined. The staff was also referred by leveling to bench mark A, the only one of the bench marks of 1877 still in existence, and to three new bench marks established by Assistant Baldwin in different parts of the city. On the completion of this work Mr. Baldwin returned to Washington, reporting for further duty on May 13.

Continuation of the triangulation of the oblique arc in Alabama.—Early in March, 1897, Assistant W. B. Fairfield was directed to prepare for the resumption of the work on the triangulation of the oblique arc in southwestern Alabama, and immediately detailed Foreman Jasper Bilby to visit and inspect the various signals, post the lamps, and prepare the stations for occupation. This preparatory work was completed by the 29th, and on the same date Assistant Fairfield arrived at Mobile. Observations were begun at "Spring Hill" station on the 4th of April, but the progress from that date to May 15 was slow on account of the dense smoke arising from forest fires, which frequently made the signal lights of distant stations invisible. After this the atmospheric conditions became more favorable and the work progressed rapidly, and by June 20 the final observations at Fort Morgan were completed. In order to avoid expensive cutting of vistas through the forests on the lines "Spring Hill"–"Fort Morgan," "Spring Hill"–"St. Elmo," and "Fort Morgan"–"St. Elmo," the lights at those stations were given additional elevations of from 24 to 45 feet, making their total heights above the ground 165 feet, 144 feet, and 80 feet, respectively. An 82-foot pole was also erected over the transit pier of the old astronomical station in Bienville square, Mobile, which was thus connected with the triangulation, as were also a number of prominent objects, such as church spires, etc. Owing to the carelessness of the light tender at "Spring Hill," two of the safety lamps were completely destroyed by fire, but fortunately no serious damage was done to the signal.

The number of stations occupied, ending with Fort Morgan, was thirteen, and the observations at the latter point completed the work originally contemplated; but, in accordance with supplemental instructions, Assistant Fairfield, on the 23d of June, began a search for old trigonometrical points on Mississippi Sound, with a view of connecting the triangulation of that region, executed in 1847, with that just completed at Fort Morgan. The first points visited were "Petit Bois" and "East Pascagoula," and in both cases the search for the old stations was unsuccessful, the ground marks having been obliterated, the first by the shifting of the sand hills, and the second by the encroachment of the sea. The party being still in the field at the close of the fiscal year, the further account of the recovery of old points and their connection with the oblique arc triangulation will appear in my next report.

In his report Assistant Fairfield acknowledges his indebtedness to Maj. W. T. Rossell, of the United States Engineer Corps, who kindly furnished transportation to and from Fort Morgan at all times to members of the party, and also for all outfit, supplies, and lumber.

Foreman Jasper S. Bilby performed his duties during the season in his usual thorough and efficient manner, and was an invaluable member of the party.

Precise leveling in Mississippi—Vicksburg to Meridian.—In order to further connect the lines of precise levels from New Orleans to St. Louis and from Mobile to Odin and complete the system of loops or circuits introduced as checks, the line between Vicksburg and Meridian, Miss., was required, and Assistant Isaac Winston was directed to execute the work. He left Washington on the 2d of November, 1896, and immediately organized a party at Vicksburg. The work began on the Louisiana side of the river, and the first operation therefore was the leveling across the stream, and this was much facilitated by the courtesy of Maj. J. H. Willard, United States Engineers, in charge of the improvement of navigation in that region, who kindly placed boats and a small steamer at the disposal of the party. The river crossing was made in the usual manner, repeated observations in both directions being made to eliminate the effect of atmospheric refraction, and the method of observing throughout the line of levels was that customarily followed, viz, that known as the double simultaneous line method. The starting point on the

Louisiana shore was bench mark 211, established by Assistant J. B. Weir in 1880, and various bench marks established by Major Willard's party on both sides of the river were connected with. The line from Vicksburg to Meridian followed the roadbed of the Alabama and Vicksburg Railroad, and no special difficulties were encountered. Permanent bench marks were established in all towns and villages where a suitable place could be found, and these are all carefully described in the records. The use of the velocipede cars, kindly permitted by the railway officials, greatly facilitated the rapid progress of the work and added to the comfort of the party.

Mr. William Bowie served as recorder from the beginning of the season until December 31, when he was assigned to other duty. He was succeeded by Mr. C. B. Strong, who served to the close of the season.

The line was completed to Meridian, a distance of 236 kilometres, by February 7, and the party was then disbanded and Assistant Winston returned to Washington, where he was engaged on his office work and computations until directed to resume work in Kansas on the transcontinental line of levels. Mr. Winston in his report expresses his high appreciation of the courtesies extended by Maj. J. H. Willard and the valuable assistance rendered by Assistant Engineer G. C. Haydon in making the river crossing.

The principal statistics of the work may be briefly stated as follows:

Length of double line leveled, in kilometres	236
Number of permanent bench marks established	33

The previous and subsequent services of Assistant Winston on the Kansas leveling will be mentioned elsewhere under the proper geographical headings.

ABSTRACTS OF REPORTS FROM FIELD PARTIES, FISCAL YEAR 1897.

MIDDLE DIVISION.

STATES AND TERRITORIES BETWEEN THE MISSISSIPPI RIVER AND THE ROCKY MOUNTAINS.

28. Minnesota.
29. North Dakota.
30. South Dakota.
31. Iowa.
32. Nebraska.
33. Missouri.
34. Kansas.
35. Arkansas.
36. Indian Territory.
37. Oklahoma Territory.
38. Louisiana.
39. Texas.

Progress Sketches, showing the localities of field work in the Middle Division, will be found at the close of Part I.

Survey of Lake Pontchartrain, Louisiana—Triangulation, topography, and hydrography.—In the latter part of December, 1896, Assistant P. A. Welker, in accordance with previous instructions, proceeded to New Orleans, La., and organized a party for the continuation of the survey of Lake Pontchartrain. The schooner *Quick* and a naphtha launch were turned over to his charge, and Assistants John Nelson, R. L. Faris, and F. A. Young, and Recorder John Lord Nisbet were assigned to the party.

The field operations began early in January, a detached party under the charge of Assistant Nelson, with quarters on shore, executing the topography in the vicinity of West End, Frenier, and Ruddock, and the main party on the schooner operating in other localities. The weather was unusually stormy, rainy, and foggy, and much delay was thereby occasioned, but by February 17 the topography from West End to Pass Manchac was completed. By the end of February the hydrographic signals were erected and the sounding work was in progress. This work was also much delayed by the continuance of unfavorable weather, and frequently signals were washed away by the high water in the swamps and the heavy seas of the lake. On one occasion the naphtha launch was swamped, and sank in 12 feet of water, but was subsequently raised without serious damage; a plane table and alidade, however, were not recovered. Lake Pontchartrain is a large body of water, and in severe storms, which are frequent at this season of the year, the seas are quite heavy. Work was carried on on many days at considerable risk, but, as Assistant Welker states in his report, without running such risks but little could have been accomplished. The hydrography was discontinued at the end of April, and the remainder of the season was spent in determining points for the continuance of the work to the eastward next season. Tides were observed at three stations during the progress of the hydrographic work, self-registering gauges having been erected at West End and Pass Manchac and an ordinary staff gauge near the mouth of Bayou le Branche. On May 15 the party was disbanded and Assistants Welker, Nelson, Young, and Faris returned to Washington, and were engaged on their office work until again assigned to field duty.

In his report Assistant Welker acknowledges the valuable and efficient service rendered during the season by all members of his party.

The statistics of the season's work are as follows:

Area of triangulation, in square statute miles	5
Number of signals erected	3
Number of geographical positions determined	2
Area of topography surveyed, in square statute miles	60
Shore line of lake surveyed, in statute miles	38
Shore line of bayous surveyed, in statute miles	77
Length of roads surveyed, in statute miles	29
Number of topographical sheets finished	4
Area sounded, in square geographical miles	200
Number of miles (statute) run while sounding	1 040
Number of angles measured	1 454
Number of soundings taken	46 724
Number of tidal stations established	3
Number of hydrographic sheets finished	2

At the close of the fiscal year Assistant Welker was at Salt Lake City preparing for reconnaissance and triangulation in the States of Utah, Nevada, and Idaho.

Hydrographic survey at the mouth of Brazos River, Texas.—See under head of "Special operations."

Magnetic observations at various points in the Central and Northwestern States.—At the closing of the last fiscal year Assistant R. L. Faris was engaged in determining the magnetic declination, dip, and intensity at various points in the Central and Northwestern States, and my last report gives a list of twenty-four stations completed by June 30, 1896. The work was continued into the present fiscal year, five additional stations in Montana and North Dakota being completed by July 15, when the season's work closed.

The five stations occupied this year are Havre and Glasgow, Mont., and Williston, Rugby, and Pembina, N. Dak. One or two days' observations were made at each station, according to the requirements, together with the necessary determinations of time, latitude, and azimuth. It was intended that the longitudes should be determined chronometrically, but on reducing the observations it was found that the "traveling rate" of the chronometer was too variable and uncertain, and the values had therefore to be derived from the best authenticated maps of the General Land Office.

All stations were so selected as to be free from local artificial disturbing causes, and were carefully marked, and their descriptions have been filed in the archives of the Survey for future reference.

Mr. Faris, on the completion of the field work, returned to Washington and was occupied until August 17 in computing the results. In this he was aided by Assistant A. L. Baldwin.

Continuation of the transcontinental line of precise levels in Kansas.—As stated in my last report, Assistant Isaac Winston, under instructions to resume the work on the transcontinental line of levels, reached Salina, Kans., on June 30.

The party, consisting of a recorder, two rodmen, and two hands, was at once organized and active operations began July 2. The route followed was along the Union Pacific Railroad, and the usual practice of locating permanent bench marks on suitable buildings in the towns and villages along the route was followed. The use of the velocipede cars for the transportation of the party, and the tent observing car described in a previous report, was not permitted by the railroad officials, and this caused considerable delay and inconvenience to the party. The strong winds that so persistently prevail in this region also caused much delay and occasionally prevented work entirely. A large umbrella was used as a wind-break, as well as to shade the instrument from the sun, and it was frequently necessary during observations to steady the rods by means of guys. During the progress of the work connection was made with the two ends of the "Russell base" and with two other stations of the transcontinental triangulation along the thirty-ninth parallel, thus furnishing a valuable check on the elevations determined through the triangulation by vertical angles. The river-gauge bench mark of the United States Geological Survey, at Ellsworth, was also connected with the line of levels. On the 10th of September the season's work closed at Ellis, Kans., a distance of 187 kilometres from Salina.

Assistant Winston, after the disbandment of the party, proceeded as far westward as Denver

for the purpose of examining the facilities available for the further prosecution of the line and determining the party outfit requisite.

The country is sparsely settled and at many points it will be difficult if not impossible to secure lodging places for the party, and the use of tents will probably be a necessity. At Denver Mr. Winston arranged for the preparation of stone bench marks for future use, and then returned to Washington by way of Omaha, stopping at the latter place to confer with the railroad officials in regard to the use of the velocipede cars.

Mr. B. C. Strong served as recorder during the season, and Messrs. C. C. Crew and H. W. Wagner as rodmen.

The statistics of the work are as follows:

Number of kilometres of double line completed	187
Number of permanent bench marks established	20

The subsequent services of Assistant Winston in Mississippi and Kansas are noticed elsewhere in this report.

Resumption of the transcontinental line of precise levels in Kansas in the spring of 1897.—On June 7, 1897, Assistant Isaac Winston, in accordance with instructions, left Washington and proceeded to Ellis, Kans., for the purpose of continuing work on the transcontinental line of precise levels. A party was at once organized, and by the end of the month 44 kilometres of double line were completed. The party being still in the field at the close of the fiscal year, the results of the season's work will be given in the report for 1898.

Transcontinental geodetic work—Measurement of the "Salina base," Kansas.—At the close of the fiscal year 1896 the party, under the direction of Assistant F. D. Granger, had completed the trigonometrical work necessary to connect the "Salina base" with the main transcontinental triangulation, and the clearing, grading, and general preparation of the line and the actual measurement of the base was then in progress. The base measure, supplemented by astronomical observations for time, latitude, and azimuth, was continued during the present fiscal year until August 11; when, the work being satisfactorily completed, field operations in this locality closed and the party was assigned to other duty.

The base line is located in the valley of the Salina River, about 80 feet north of and nearly parallel to the track of the Union Pacific Railroad between Salina and New Cambria. Its west end is situated in North Salina, on land owned by the city, and its east end about a mile west of New Cambria, on private property, the length of the line being a little over 6½ kilometres. Beginning at the west end, the line crosses a wheat field and enters the Salina and New Cambria wagon road at a point 870 metres east of "West Base," then follows along on the north side of the road for a distance of 5 165 metres, and finally crosses 517 metres of cultivated land to "East Base." The general character of the ground is smooth and hard, and at no point is it much broken or very irregular. The direction of the line from "West Base" is north 68°·36′ east, and the land slopes gently to the east, the difference of elevation of the base terminals being 20 feet. At a distance of 6 110 metres from "West Base" a small gully had to be bridged over, owing to the wet and muddy condition of the ground, but no other obstructions were met except near the east end where some wire fences were encountered. Section stones were set at distances of 1 kilometre throughout the line and carefully aligned. These were limestone posts 2 feet long and 6 inches square, and were set in cement, with their tops 4 inches below the surface of the ground, and in the top of each stone was inserted a copper bolt with fine cross lines drawn upon its head. Preliminary measures of the base were made with a steel tape and the grades were accurately determined by lines of levels; the final measures were made with the secondary contact-slide bars Nos. 13 and 14, which had recently been restandardized by the Office of Standard Weights and Measures. Intense heat and frequent rains interfered with the rapid prosecution of the work, the former cause finally necessitating the abandonment of afternoon operations and working only from early morning until noon.

Two satisfactory measures were completed by July 23, and the ends of the base were then marked by suitable monuments.

The underground marks (at each end of the base) are cross lines on the heads of copper bolts inserted in stone posts and sunk 2½ feet below the surface of the ground, and the surface

marks are similarly marked copper bolts inserted in limestone blocks 33 inches square by 25 inches high. These monuments rest in concrete beds placed 6 inches above the subsurface marks, the concrete beds having central apertures 8 inches square so that the underground marks may be readily accessible when necessary, and each monument bears on its upper surface the inscription U. S. C. & G. Survey, 1896.

After the completion of the base measure, time, latitude, and azimuth determinations were made at "West Base," and lines of levels were run to connect west and east bases with the nearest bench marks of the transcontinental line, located at Salina and New Cambria, respectively. Assistant Granger then reduced his party and proceeded to execute a reconnaissance in Nebraska and northern Kansas, which will be treated of in another paragraph.

On the Salina base work Mr. Granger was assisted by Assistants W. C. Hodgkins, A. L. Baldwin, and E. B. Latham, and Foreman E. E. Torrey, and all performed their various duties in a very satisfactory manner. On the conclusion of the work Messrs. Hodgkins and Baldwin returned to Washington, and Messrs. Latham and Torrey accompanied Assistant Granger on the Nebraska reconnaissance.

The statistics relative to the base measure are as follows:

Number of measures of the base by secondary bars	2
Number of measures of the base by steel tape	3
Length of base, in kilometres	6·55+
Length of lines of levels run, in kilometres	16
Number of time, latitude, and azimuth stations occupied	1

Reconnaissance in Nebraska and northern Kansas.—Under instructions of July 14, 1896, Assistant F. D. Granger, on the completion of the Salina base measurement in August, proceeded to make a reconnaissance through Nebraska and northern Kansas for the purpose of laying out a suitable scheme of triangulation for the determination of points for State surveys in the former. Accompanied by Assistant E. B. Latham, Mr. E. E. Torrey, and a driver, Assistant Granger left Salina on the 17th of August, his outfit consisting of two horses and a wagon, and the necessary instruments. Later in the season this was increased by an additional wagon and pair of horses. A wide belt of country in the vicinity of the ninety-eighth meridian was examined as far north as O'Neill, the principal points touched at en route being Minneapolis, Glasco, Beloit, and Mankato in Kansas, and Red Cloud, Blue Hill, Hastings, Grand Island, Elbe, St. Paul, Brayton, Loup City, Ord, Ericson, Bartlett, Albion, Neligh, Ewing, and O'Neill, in Nebraska. The fact was developed that a fair scheme of triangulation southward from Niobrara, on the northern Nebraska boundary, to the transcontinental line, was practicable, but that the country somewhat to the westward was more favorable and offered better facilities for larger figures. The general character of the country traversed is rolling, but here and there, especially in the vicinity of the rivers, wide belts of sand are encountered, and between them areas of clayish soil. The sandy regions abound in clusters of sand dunes, varying in height from a few feet to 75 feet. These hillocks are of a shifting nature and are principally found near and to the southward of the numerous streams which flow in an easterly direction through the State. "Blowouts," as they are locally termed, are noticeable in many of these hillocks, usually on the west and northwest sides, sometimes attaining a depth of 15 or 20 feet and doubtless frequently resulting in the complete demolition of the dunes. A growth of rank grass tends to preserve the hillocks in the forms they have assumed until a "blowout" is started at some vulnerable point by an unusually severe wind, and then the excavation increases rapidly until the close of the windy season, when a fresh growth of grass may check it temporarily. About 25 per cent of the land in the clayish sections is under cultivation, the crops being principally beets, corn, wheat, oats, and millet, and vast quantities of hay are cut from the meadow lands adjacent to the streams. Clusters of cottonwood trees are found in the meadows and along the borders of streams and seem to thrive well, but on the prairies proper, 100 or 200 feet above the level of the river valleys, few trees are found, and those of stunted growth. The southern portion of the State of Nebraska is quite well settled and fairly well supplied with transportation facilities, but farther north, between the North Loup and Elkhorn rivers, through the counties of Greeley, Wheeler, Garfield, and Holt, the means of transportation are meager, and the country is sparsely settled. The principal streams crossing the parts of the State examined are

the Blue, Platte, South Loup, North Loup, Elkhorn, Niobrara, and Missouri rivers, and all of them flow in an easterly direction.

The preliminary examination ended at O'Neill in the latter part of September, and Assistant Granger then slowly retraced his steps, selecting the points most available for the scheme of triangulation and determining the approximate distances and elevations. A scheme was finally perfected as far south as Lowell–Prosser, the average length of the triangle sides being 20 miles, and only one point requiring a height of signal as great as 50 feet. Assistant Granger also selected a site for a base line in Nebraska, an admirable location being found between the towns of Gibbon and Sheldon. The proposed line is about 9½ kilometres in length and lies north of and parallel to the track of the Union Pacific Railroad. The ground is smooth and the grade slight and uniform, the difference of elevation of the base terminals not exceeding 15 or 20 feet, and moreover, the simplicity of the connection with the triangulation scheme is all that could be desired, no auxiliary stations being required for expansion. Assistant Granger found that this site presented so many advantages, and was so much superior to any other that could be found farther north, that he strongly recommends its adoption, although the distance from the Salina base is less than was desired, viz, 135 miles instead of 200. The season's work closed on the 9th of November and the party was disbanded, Assistants Granger and Latham returning to Washington where they were engaged on office work until again assigned to field duty. Assistant Granger in his report highly commends the service rendered by Assistant Latham and Mr. E. E. Torrey, throughout the reconnaissance.

The statistics of the work are as follows:

Area reconnoitred, in square statute miles	2 680
Lines of intervisibility determined	5
Number of points selected for the triangulation scheme	22
Length of base line selected, in kilometres	9½

Resumption of the reconnaissance in Nebraska and northern Kansas in the spring of 1897.—Early in April, 1897, Assistant F. D. Granger made arrangements for the continuation of the Nebraska and Kansas reconnaissance, and by the 10th the party was organized and active field operations begun. Starting from the line Lowell–Prosser, the southernmost points of the previous season's work, the reconnaissance was carried through southern Nebraska and northern Kansas until a junction with the transcontinental arc at the stations Meade's Ranch and Waldo was effected. This was accomplished by June 20 and immediate preparations were then made for the execution of the triangulation. The erection of the necessary signals at Waldo, Meade's Ranch, Dial, Kill Creek, Lawrence, and Old Well was begun and was in progress at the close of the fiscal year. Assistant Granger has submitted complete reports of the work executed, accompanied by sketches showing the scheme of triangulation laid out from the reconnaissance, the approximate elevation of each point selected, and the height of signal necessary to secure intervisibility and ensure rapidity of the angular measures. Foreman E. E. Torrey is again serving in the party in his usual efficient and highly satisfactory manner. The party being still in the field the details of the triangulation work must be deferred until my next report, but the reconnaissance being completed the statistics relating thereto can be given, as follows:

Area reconnoitred, in square statute miles	1 740
Lines of intervisibility determined	5
Number of points selected for the triangulation scheme	14
Number of signal poles erected	1
Number of observing tripods and scaffolds built	2

Transcontinental triangulation—Measurement of the "Versailles base," Missouri.—In May, 1897, Assistant A. L. Baldwin, in accordance with instructions, proceeded to Versailles, Mo., for the purpose of measuring a verification base line for the great transcontinental arc. The base line was originally laid out in 1878 by Assistant J. A. Sullivan and its terminals were occupied as primary stations in 1880 by Assistant F. D. Granger, but it had never been measured. It is situated on the divide between the Missouri and Osage rivers, and near the town of Versailles, and forms a side of one of the figures of the transcontinental chain of triangulation. Its length is about 7 650 metres. The measurement was made by means of a standardized 50-metre steel tape,

and in the work Assistant Baldwin was aided by Assistant R. L. Faris, Computer H. F. Flynn, and Recorders D. W. Eaton and Paul F. Ehrhard. The leveling for profile of the line and also for its connection with the nearest bench mark of the transcontinental line of levels, 20 miles distant at Tipton, Mo., was executed by Messrs. Flynn and Eaton. Marking stakes were set up throughout the line at distances of 50 metres, with intermediate support stakes for the tape. These were all carefully aligned, and adjusted as to elevation, and a constant tension, regulated by a standarized spring balance, was applied to the tape throughout the measures. The measurements, one in each direction, were made at night, so as to secure the most favorable conditions, but 3 kilometres were subsequently measured also by day, in order to deduce the relative effects of rising and falling temperatures. One kilometre of the line was also measured three times by means of the secondary base bars, so that the constancy of the value of the tape could be frequently tested. The base measure was satisfactorily completed by June 30, when the party was disbanded and Assistant Baldwin returned to Washington. Messrs. Faris and Flynn, in accordance with instructions, remained behind for the execution of a reconnaissance to the southward of the Versailles base. This work belonging entirely to the next fiscal year will be treated of in my next report.

ABSTRACTS OF REPORTS FROM FIELD PARTIES, FISCAL YEAR 1897.

WESTERN DIVISION.

STATES AND TERRITORIES BETWEEN THE ROCKY MOUNTAINS AND THE PACIFIC.

40. California.
41. Oregon.
42. Washington.
43. Idaho.
44. Montana.
45. Wyoming.
46. Nevada.
47. Utah Territory.
48. Colorado.
49. Arizona Territory.
50. New Mexico Territory.

Progress Sketches, showing the localities of field work in the Western Division, are given at the close of Part I.

Continuation of the topographic resurvey of San Francisco Bay and Harbor.—The topographic resurvey of San Francisco Bay and Harbor was continued during the greater part of the year under the general direction of Assistant A. F. Rodgers, the party being under the immediate charge alternately of Mr. Ferdinand Westdahl or Assistant Fremont Morse, as the execution of other duties permitted. Good progress was made until the end of December, when the field operations were temporarily suspended on account of inclement weather. The work was again resumed about the middle of March and continued to the close of the fiscal year. The incidental triangulation to determine points in San Francisco and San Pablo bays for the topographic and hydrographic parties was executed at various times by Assistants J. J. Gilbert and E. F. Dickins, as opportunity occurred, they being also occupied with the computation, etc., relating to their own field work elsewhere.

Assistant Gilbert also in February and March ran a line of spirit levels from the bench marks at the Union Iron Works to the southern extremity of San Francisco Bay, establishing intermediate bench marks at South San Francisco, Milbrae, Burlingame, San Mateo, Redwood City, Palo Alto, Ravenswood, Alviso, and San Jose, and in April began a line of levels from Sausalito to Benicia. The former line embraced a distance of 56 miles, and the latter, to the point reached by Assistant Gilbert, of about 40 miles. The leveling work was suspended April 24 to enable Assistant Gilbert to prepare for the resumption of his regular field work in Washington Sound, but the line was subsequently completed by Mr. F. W. Edmonds.

The statistics of the San Francisco Bay work, triangulation, topography, and leveling are as follows:

Area of triangulation, in square statute miles	150
Number of signals erected	28
Number of stations occupied	29
Number of objects determined	94
Area of topography surveyed, in square statute miles	97
Length of general shore line surveyed, in statute miles	22
Length of general shore line of creeks and sloughs, in statute miles	262
Length of roads and railroads surveyed, in statute miles	102
Distance leveled, in statute miles	116

Assistant Rodgers also retained charge during the year of the suboffice at San Francisco, but for short periods, when absent on other official business, was relieved temporarily by Assistants Gilbert or Dickins. He also had general charge of the tidal observations at Sausalito station, the construction and determination of the new observatory at Presidio, the construction of a new tidal station at the same place, and served for a time as member of the Santa Monica–San Pedro Deep Water Harbor Board. During the year the following operations or investigations in addition to those already mentioned were carried on: In October Mr. Ferdinand Westdahl was detailed to determine the positions of reported rock breaks in the sea approaches to Coquille River, Oregon. In December, at the request of the pilot commissioners of the port of San Francisco, Mr. Ferdinand

Westdahl and Assistant O. B. French made an examination of the "Cestissima Rock," in the Bonita or North Channel. In February, at the request of Col. W. R. Shaffer, U. S. A., commanding at the Presidio, Assistant Fremont Morse was detailed to determine the geographical position and elevation of the Lewis range finder, located on the heights above the Fort Point. In April Assistant E. F. Dickins was detailed to assist Lieut. James M. Helm, U. S. N., commanding the steamer *McArthur*, in determining range stations to be used in determining compass deviations. In the same month Mr. Frank W. Edmonds, at the request of Capt. Sedgwick Pratt, U. S. A., the commanding officer at Fort Mason, was detailed to run a line of levels from the bench mark at the Presidio to one located on the parapet of the fort. In May Assistant E. F. Dickins was detailed to determine stations for a 1-mile trial course for naval vessels in the vicinity of Angel Island and Bluff Point, San Francisco Bay. The tidal observations at Sausalito and the Coquille River examination are mentioned more fully in separate paragraphs.

Continuation of the hydrographic resurvey of San Francisco Bay and Harbor.—The hydrographic resurvey of San Francisco Bay and Harbor was continued during the year by the parties of the steamers *Gedney* and *McArthur*, the former under the command of Lieut. Commander A. P. Osborn, U. S. N., and the latter under the command successively of Lieuts. James H. Sears and J. M. Helm. The triangulation for the determination of the necessary points for the survey was executed by Assistants J. J. Gilbert and E. F. Dickins, who were detailed for that purpose by Assistant A. F. Rodgers.

The steamer *Gedney* was engaged on the resurvey of San Pablo Bay from July 6 to November 17, 1896, when she proceeded to Oakland for repairs. From December 13, 1896, to February 27, 1897, the party was engaged, under the direction of the Santa Monica-San Pedro Deep Water Harbor Board, in making a hydrographic examination of San Pedro and Santa Monica bays and a hydrographic survey of the inner harbor of San Pedro. On the completion of this work the San Pablo Bay survey was resumed, but was again discontinued on May 11, for the purpose of laying out a 1-mile speed-trial course in San Francisco Bay.

On June 21 the *Gedney* was, by the direction of the honorable Secretary of the Treasury, placed at the disposal of the president of the Leland Stanford University for the purpose of carrying a party of scientists to Guadalupe Island, on the northwest coast of Mexico, to investigate the seal rookeries in that region. This duty was completed by July 1, and the party then returned to San Francisco.

The statistics of the *Gedney's* work in San Pablo Bay are as follows:

Area sounded, in square geographical miles	24
Distance run while sounding, in geographical miles	904
Number of angles measured	9 728
Number of soundings taken	36 059
Number of tidal stations established	4
Number of hydrographic sheets completed	1

The statistics of the Santa Monica and San Pedro surveys will be given under the head of Special Operations.

The steamer *McArthur* was engaged on the further development of Bonita Channel and the Golden Gate, that portion of San Francisco Bay between the city and Alcatraz Island on the west and Oakland and West Berkeley on the east, and since the middle of April, 1897, on the eastern shore of the bay between Thompsons Landing and Potrero Point. A number of dangers to navigation were discovered and located, and numerous ranges in and about San Francisco, for use in the determination of compass deviations, were established.

The statistics of the *McArthur's* work have been tabulated as follows:

Area sounded, in square geographical miles	27½
Distance run while sounding, in geographical miles	796
Number of angles measured	12 210
Number of soundings taken	56 516
Number of tidal stations established	6
Number of hydrographic sheets completed	1

The naval officers attached to the two parties during the year were as follows: To the *Gedney*, Lieut. Commander A. P. Osborn (chief of party), Lieut. W. H. Faust, Ensign C. M. Stone, and Ensign P. Symington; to the *McArthur*, Lieut. James M. Sears (chief of party until April 4, 1897),

Lieut. J. M. Helm (chief of party from April 4 to the close of the year), Lieut. N. A. McCully, and Ensign M. L. Miller.

Continuation of the tidal record at the Sausalito (San Francisco Bay) Tidal Station.—The self-registering tide gauge at the Sausalito Tidal Station, under the supervision of Assistant A. F. Rodgers, continued in successful operation throughout the year, and an unbroken record has been received. Mr. H. S. Ballard served as tidal observer. Arrangements have, however, been made for the removal of the station to Presidio, where a favorable site has been selected, and the construction of the building well advanced toward completion. The observations at the new station will begin early in the next fiscal year.

Determination of the latitude and longitude of the new "Presidio Astronomical Station," San Francisco, Cal.—In the latter part of October, 1896, Assistant A. F. Rodgers, in charge of the topographical resurvey of San Francisco Bay and Harbor, detailed Assistants Fremont Morse and O. B. French to determine the telegraphic difference of longitude between the old astronomical observatory in Lafayette Park and the new one located in the Presidio Military Reservation, and Assistant French was also directed to determine the latitude of the new observatory. It was the intention to begin the longitude work on the 1st of November, but on conferring with the superintendent of the Western Union Telegraph Company, it was found impracticable to secure the use of the wires at that time on account of the press of business due to the approaching Presidential election. On the 7th, however, the line was placed at the disposal of the party and observations were begun that night. From some unexplained cause, however, the wires were not in working order when the time for the exchange of signals arrived, but as the sky clouded over about the same time, the observations would have been lost anyway. The line again failed on the 10th, and it was not until the night of the 11th that a full set of observations at both stations were obtained. Assistant Morse first occupied the Lafayette Park Station and Assistant French the Presidio Station, and complete observations and exchanges were obtained on ten nights, the observers interchanging stations in the middle of the series to eliminate personal equation effects from the final result. The nights of complete observations were November 11, 12, 13, 14, 20, 25, 27, 28, 29, and 30, cloudy weather preventing work on the intervening dates.

The resulting difference of longitude between the two observatories from Assistant Morse's field computation is $0^{hr}\ 00^{m}\ 05^{s}\cdot950 \pm 0^{s}\cdot0076$. The latitude observations at the Presidio Station were made by Assistant French on six nights, twenty-seven pairs of stars being used on each occasion. Zenith telescope No. 3 was used and careful redeterminations of level and micrometer values were made.

On the completion of the observations Assistant Morse resumed work on the San Francisco Bay resurvey, and Assistant French was granted leave of absence until December 20, when he was directed to make a magnetic survey of southern California. This work will be reported in another paragraph.

Magnetic determinations in the State of California.—In October, 1896, Assistant H. P. Ritter was directed to prepare for magnetic determinations in California, and left San Francisco on the 15th of the following month. Observations for declination, dip, and intensity, with the incidental determinations of time and azimuth were made at thirty stations distributed over a territory 300 miles in length by 100 miles in width, or an area of 30 000 square miles, including the western part of the State from San Francisco to Los Angeles, the San Joaquin Valley, and the northern part of the Mojave Desert. The stations determined were the following and were occupied in the order given: San Jose, Hollister, Santa Cruz, Salinas, Soledad, San Lucas, Bradley, Santa Margarita, Port Harford, Santa Maria, Los Olivos, Santa Barbara, Ventura, Saugus, Palmdale, Mojave, Caliente, Asphalto, Delano, Visalia, Huron, Fresno, Mendota, Volta, Madera, Merced, Modesto, Altamont, Milton, and Stockton. One day's observation of each element was made at each station, except San Jose and Santa Barbara, where two days' observations were required. All stations were carefully marked for future reference, and full descriptions of each are deposited in the archives of the Survey, with the records of the observations. Great care was also exercised in the selection of station sites, so as have them free from present disturbing influences or probable future ones. The azimuth marks were usually prominent and well-defined objects, and these were also referred by angular measures to other prominent objects whenever practicable. The observations began on the 16th of November and were completed on the 30th of March.

Assistant Ritter then returned to San Francisco and was engaged on his office work and computations until again assigned to similar field duty in June.

On June 11 he again left San Francisco and proceeded to Santa Rosa, the county seat of Sonoma County, where the magnetic elements were determined and a meridian line, marked by granite posts, was established. Similar observations were then made at Napa, the county seat of Napa County, but for lack of time no meridian line was established. The azimuths of a number of well-defined objects were determined, however, so that the meridian line can readily be marked at any time in the future. Assistant Ritter returned to San Francisco on the 30th of June and resumed his unfinished computations and duplication of records.

Magnetic observations at eighteen stations in southern California.—Early in January, 1897, Assistant O. B. French, in accordance with previous instructions, began a magnetic survey of southern California, the magnetic elements, declination, dip, and intensity being determined at each station on from one to three days, according to the requirements.

Auxiliary astronomical observations for time, latitude, and azimuth were observed at all stations and the longitudes were obtained chronometrically.

Stations were selected with a view to permanency and, as far as possible, free from local artificial disturbing causes, both present and prospective, and were marked by stone or redwood posts bearing suitable inscriptions. The azimuth marks were also carefully selected and as a precautionary measure these were usually referred to other prominent objects by angular measures with the theodolite.

The principal instrumental constants, except the temperature and induction coefficients, were redetermined twice during the season. The following is a list of the eighteen stations determined, named in the order of their occupation: Kramer, Barstow, Bagdad, Mauvel, Blake, Oro Grande, San Bernardino, North Pomona, Santa Monica, San Pedro, Newport Beach, Capistrano, Oceanside, Laplaya, Foster, San Jacinto, Elsinore, and Indio.

The field work was completed on the 4th of March, and Mr. French then returned to Washington and was engaged at the office until the latter part of April in computing his results and completing the records. He was then assigned to other field duty (telegraphic longitude and magnetic work) in Delaware, which has already been mentioned under the head of "Eastern Division."

Triangulation in southern California.—At the beginning of the fiscal year Assistant E. F. Dickins was making preparations for the execution of a triangulation to connect the Los Angeles base line with the primary triangulation of the State. He organized his party, consisting of a recorder and three men, at San Francisco, and after shipping the necessary instruments and the wagons and camp outfit, which had been stored at Eureka, started for San Pedro on the 18th of July. "San Pedro Hill" and "Los Ceritos" stations were recovered without difficulty, and the party was then transferred to Anaheim, from which point primary station "San Juan," secondary station "Las Bolsas," and the terminal stations of the Los Angeles base line were visited, examined, and prepared for occupation. All the marks were found undisturbed, but the country in the vicinity has become thickly settled and much improved since the base line was measured in 1889, and the difficulties in executing a triangulation have therefore been considerably increased. Lines of eucalyptus trees have been planted along both sides of most of the roads, and many of the houses are now surrounded by groves of the same trees. "Northwest base" station itself stands in the midst of one of these groves, and the view was found completely obstructed in all directions. Considerable cutting of lines was therefore necessary to secure the intervisibility of stations, and this had to be accomplished by simply sawing off the tops of trees, as the owners naturally objected to having them cut down. By the end of August the lines were all cleared, and the observations began on the 1st of September at "Las Bolsas" station. "Los Ceritos" and "San Pedro Hill" were next occupied, in the order named, and on their completion preparations were made for the work at the primary stations. The camp outfit was overhauled and packed, and the party set out for "San Juan," in charge of Recorder G. F. Wakefield, Assistant Dickins meanwhile visiting and recovering "Wilsons Peak" and posting a heliotroper there. Assistant Dickins rejoined the party at "San Juan" on the 12th of October, completed the occupation of that station on the 26th, and immediately transferred the party to "Wilsons Peak," where the final observations were made on the 16th of November. On the 20th, with a reduced party, he

returned to northwest and southeast bases for the purpose of tearing down the brick towers and scaffolds and setting up in their places suitable granite monuments. This work was somewhat delayed by the failure of the contractor to complete the monuments by the specified time, but was satisfactorily concluded by December 10, and the party then returned to San Francisco, arriving on the 13th. Assistant Dickins then reported to Assistant A. F. Rodgers, and was engaged on his computations and other office work until assigned to field duty in connection with the resurvey of San Francisco Bay and Harbor.

The statistics of the work in southern California are as follows:

Area of triangulation, in square statute miles	840
Number of stations occupied for horizontal measures	5
Number of stations occupied for vertical measures	2
Number of geographical positions determined	5
Number of elevations determined trigonometrically	3

Examination of the sea approaches to the mouth of the Coquille River, Oregon.—In October, 1896, Assistant A. F. Rodgers, in accordance with telegraphic instructions, detailed Mr. Ferdinand Westdahl to determine the positions of reported rock breaks in the approaches to the mouth of Coquille River, Oregon. The bar was crossed on the 25th, and examinations of the breaks were accomplished the same day, but a heavy rolling sea prevented the taking of soundings. The determinations of the positions were made from shore stations, and the work was finally completed on the 31st, and Mr. Westdahl then returned to San Francisco. The work was executed by means of a boat and crew, kindly detailed by Superintendent T. J. Blakeney from the life-saving station at Bandon.

Continuation of the survey of Washington Sound, Washington—triangulation and topography.—Early in May, 1897, Assistant J. J. Gilbert, in accordance with instructions, left San Francisco and proceeded to Olympia and Seattle to prepare for the resumption of the survey of Washington Sound. After attending to the repairs of the steam launch *Fuca*, he organized a party and reached the field of operations, San Juan Island, on the 24th. The triangulation was first taken up, but before much progress had been made it was found necessary to detail him to make, for the Navy Department, an immediate special examination of the approaches to the Port Orchard Naval Station. After laying out work to keep his party employed during his absence, he proceeded on June 17 to Port Orchard and was there engaged until the 26th. On the completion of the special duty, an account of which will be found under the head of "Special operations," he returned to San Juan and resumed the interrupted triangulation. The work was still in progress at the close of the fiscal year, but the following statistics to that date have been furnished:

Number of signal poles erected	48
Number of stations occupied for horizontal measures	17
Number of geographical positions determined	23

The full statement of results of the season's work will be given in the next annual report.

Geodetic work in Utah—measurement of the Salt Lake base line.—At the close of the last fiscal year the party of Assistant William Eimbeck was in the field engaged in the preparation of the Salt Lake base line and making the connection with the transcontinental triangulation. Assistant Eimbeck was occupying "Waddoup" station while the auxiliary party under the charge of Assistant P. A. Welker was observing at "Antelope" station, and the preparation of the base line and the erection of the necessary piers were making good progress under Assistant J. J. Gilbert's direction. "Waddoup" and "Antelope" stations were completed by the 5th of July; Assistant Welker then proceeding to "Ogden Peak" and Assistant Eimbeck to "South Base." These stations were completed by the end of July, and the parties then occupied "Promontory" and "North Base," respectively, completing the observations there by the middle of August. At the north and south base stations scaffold signals 70 feet in height were required to render the points intervisible, and one of these structures was destroyed by a cyclone early in August. The rebuilding of this signal caused some delay in the prosecution of the connecting triangulation, but the junction was satisfactorily concluded by the middle of the month, as above stated. The elevation of the terminals of the base line above sea level was deduced from a carefully conducted series of zenith distances measured at all stations of the triangulation, and for further verification a double line of levels was run from "North Base" to "Hooper Bench," on the eastern shore of Great Salt Lake. The different sections of the party were then united for the measurement of

the base, the preparations for which Assistant Gilbert had nearly completed. The actual measurement began on the 3d of December, the apparatus used being the duplex bars designed by Assistant Eimbeck and constructed at the office of the Survey. During the measure the bars were protected from the sun and weather by a movable canvas-covered shelter, framed of light timber and so securely braced together as to be able to stand all strains and stresses to which it was necessarily subjected. This shelter was 56 feet in length, 12 feet wide, and 9 feet high, and traveled on runners, two horses being required to draw it along the line. The base, 11·2 kilometres in length, was measured in kilometre sections, each section being measured once in each direction, under rising and falling temperatures, and reference marks being also established at each half kilometre. After a short time sufficient training and experience were acquired by the members of the party to enable them to measure a kilometre per day without difficulty, and the most favorable hours were chosen, so as to secure as nearly as possible an equal division of the conditions of rising and falling temperatures. The first measure of the base was completed on the 17th of September, and the return measure was begun the following day. A delay of four days was caused by damage to the shelter sled and to one of the bars by a cyclone which struck the party's camp on the night of the 18th; fortunately the bars escaped serious injury, but the shelter sled was wrecked and had to be reconstructed. The second measure was completed on the 3d of October, and the bars were then carefully reexamined and tested for important adjustments, after which they were securely packed and shipped to Washington. Camp was then broken, suitable arrangements made for the storage and care of the equipage, instruments, and live stock, and the party disbanded. The results of the base measure proved very satisfactory in all respects, and the behavior of the new base apparatus was excellent. Assistant Eimbeck reports that a relative accuracy of 1–5 000 000 was easily attained, both by the duplex and by the thermometric principle, and that the speed of the measure was as great as ever previously attained with other forms of base apparatus.

Assistant Eimbeck was aided in the base measure by Assistants J. J. Gilbert, P. A. Welker, H. P. Ritter, and C. C. Yates, Recorder Buford Lynch, and Foreman C. S. Wilkes, and in his report highly compliments all of these gentlemen for their efficient and enthusiastic support.

On the completion of the field work Assistants Gilbert and Ritter were assigned to duty at the San Francisco suboffice, and Assistants Eimbeck, Welker, and Yates returned to Washington, where they were engaged on the computations and other office work—Mr. Eimbeck to the close of the fiscal year, and the others until assigned to further field duty. A redetermination of the length and constants of the duplex bars was also made as soon as the apparatus was received from the field, this being rendered necessary by the accident to bar No. 15 and also by the apparent wear of the agate knife edges. Assistant Eimbeck has prepared for publication a detailed description of the apparatus, and an account of the measurement of the Salt Lake base; he has also submitted, under date of January 7, 1897, a design for a new second pendulum of the compound type, its form being that of a disk, and his report sets forth the numerous advantages possessed by this instrument over the various forms heretofore used for gravity determinations.

Reconnaissance and triangulation in the States of Utah, Nevada, and Idaho.—Early in June, 1897, Assistant P. A. Welker, in accordance with instructions, proceeded to Salt Lake City, Utah, for the purpose of executing a reconnaissance and primary triangulation in the States of Utah, Nevada, and Idaho. This triangulation starts from the line "Ogden"–"Pilot Peak" of the transcontinental system, and will ultimately be extended through the State of Montana to the forty-ninth parallel of north latitude. Assistant Welker reached Salt Lake City on the 18th of June, and was there joined on the 23d by Aid W. C. Denson, who had been assigned to his party. The instruments and outfit heretofore used on the transcontinental work, and stored at Salt Lake City and Kaysville, were taken charge of and thoroughly overhauled, and by the close of the fiscal year all preparations for the beginning of active field operations were completed. The results of the work will be given in my next annual report.

Magnetic observations in the State of Montana.—In July, 1896, Assistant R. L. Faris, engaged in the determination of the magnetic declination, dip, and intensity, and the necessary astronomical factors, at various points in the Central and Northwestern States, as mentioned under the head of Middle Division, occupied stations at Havre and Glasgow, in the State of Montana. Nine additional points in the State determined before July 1 are given in my last annual report.

ABSTRACTS OF REPORTS FROM FIELD PARTIES, FISCAL YEAR 1897.

DIVISION OF ALASKA.

[Under this heading are included the coasts of Alaska which border on the North Pacific Ocean, on Bering Sea, and on the Arctic Ocean; also the inlets, sounds, bays, and rivers.]

The localities of field operations in Alaska are shown on Progress Sketches at the close of Part I.

Hydrographic and general surveys in southeast Alaska.—The steamer *Patterson*, under the command of Lieut. Commander E. K. Moore, U. S. N., on the completion of the repairs which were in progress at the close of the last fiscal year, was fitted out for the continuation of the Alaska surveys, and sailed from Seattle, Wash., on the 14th of July, 1896. The Superintendent of the Coast and Geodetic Survey accompanied the party for the purpose of examining the general features of the country in the vicinity of the boundary line between southeast Alaska and British Columbia, and, therefore, the various inlets between Port Simpson and Yakutat Bay were visited before the *Patterson* proceeded to her field of operations.

The regular work of the party began on the 8th of August in Peril Strait, at the point reached by the triangulation of 1895, the Superintendent remaining with the party until August 23 for the purpose of inspecting the methods of carrying on the survey. The general locality of the season's work embraced Peril Strait, Salisbury Sound, and Neva and Alga straits, and the work included triangulation, hydrography, and topography, with the incidental tidal and current observations. The different branches of the work were carried on simultaneously, each officer of the party having special duty assigned him, and the survey in any locality was complete before the vessel was moved to a new anchorage. The triangulation began at Fish and Suloi points, and was carried through the south branch of Peril Strait, across Salisbury Sound, through Neva Strait, across Nakwasina Passage and through Olga Strait to Lisianski and Siginaka islands; also through Salisbury Sound to the sea. A sextant triangulation was also carried through Krestof Sound to its junction with Sitka Sound and into Nakwasina Passage. The shore line and hydrography executed cover the same limits, but the topography was delayed by various causes and was not completed below Salisbury Sound. The channels surveyed this year are for the most part narrow and intricate, and considerable difficulty was at times experienced in locating points for the triangulation, the cliffs rising abruptly from the water's edge and the summits being densely wooded.

The season's work closed on the 6th of October, and on the 9th the party sailed for San Francisco, stopping en route at Whitewater Bay, Wrangell Strait, and Clover Passage to investigate reported rocks and shoals, and at Departure Bay for coal and water; San Francisco was reached on the 23d.

The statistics of the season's work have been tabulated as follows:

Area of triangulation, in square statute miles	79
Number of signal poles erected	567
Number of stations occupied for horizontal angles	533
Number of stations occupied for vertical angles	71
Number of elevations determined	92
Number of bases (500 metres) measured	1
Area of topography surveyed, in square statute miles	27½
Length of general coast line surveyed, in statute miles	197
Number of topographic sheets finished	6

Area sounded, in square geographical miles	71
Distance run while sounding, in geographical miles	504
Number of angles measured	7 730
Number of soundings taken	12 991
Number of tidal stations established	3
Number of current stations observed	2

The naval officers attached to the *Patterson* were as follows: Lieut. Commander E. K. Moore (in command), Lieut. J. J. Knapp, Lieut. R. F. Lopez, Lieut. W. B. Hoggatt, Ensign W. W. Gilmer, Ensign G. B. Bradshaw, and P. A. Surg. R. M. Kennedy. Yeomen H. L. Ford and Hugh Rodman and Master-at-Arms W. S. Allen served as recorders and draftsmen.

Resumption of hydrographic and general surveys in southeast Alaska in the spring of 1897.—The steamer *Patterson*, under the command of Lieut. Commander E. K. Moore, was again fitted out for the Alaskan work in the spring of 1897, and sailed from San Francisco on the 4th of April. En route to the field of operations the tidal stations at Victoria and Esquimalt were visited and new stations were established in Seymour Narrows and Sergius Narrows. Sitka was reached on the 30th, and here the tidal station on Japonski Island was again set in operation, thus forming a chain of tidal stations from Victoria to Sitka. The survey was begun on the north side of Sitka Sound, where the previous season's work ended, and was continued down the sound to a connection with the work of 1893, thus completing the inside steamer route from Dixons Entrance to Sitka, via Juneau and the head of Lynn Canal, with all the arms, bays, passages, and bights connected therewith. A verification tapeline base 525 metres in length was measured at the mouth of Indian River, near Sitka, and connected with the triangulation of 1893. The work at the mouth of Salisbury Sound was next taken up and carried about 15 miles to the northward and westward off the coast of Chickagoff Island, and progress was also made to the southward on the sea side of Kruzoff Island. The completion of the survey of both inside and outside connections of Sitka Sound with Salisbury Sound during this season seems to be well assured, the above representing the progress made to the close of the fiscal year. The outside soundings are being carried to the 100-fathom curve, and it is found that the depths increase more gradually outside than inside, except off the mouth of Sitka Sound, about 8 miles off Cape Edgecumbe, where a deep hole exists, the depths dropping from 70 to 500 fathoms in 2 miles. Off Salisbury Sound and to the northward and westward the 100-fathom curve is from 12 to 15 miles offshore and the coast is very treacherous, many outlying sunken rocks and reefs being found as far out as 3 miles from shore. The shores, both inside and outside, are rugged and precipitous. About 10 miles to the northward and westward of Salisbury Sound there is an extensive archipelago, extending nearly to the mouth of Cross Sound, and affording an inside channel for small vessels. The outside hydrography can only be executed when the sea is comparatively smooth and when the seeing is good, and consequently no favorable opportunity is neglected, the inside work being carried on only when the conditions are unfavorable outside. The party being still in the field, the final report of results accomplished can not now be given, but the tabulated statistics to the close of the fiscal year are as follows:

Number of signal poles erected	311
Number of stations occupied for horizontal angles	285
Number of stations occupied for vertical angles	69
Area of topography surveyed, in square statute miles	97
Length of general coast line surveyed, in statute miles	151
Area sounded, in square geographical miles	75
Number of miles (geographical) run while sounding	736
Number of angles measured	4 483
Number of soundings taken	4 837
Number of tidal stations established	5
Number of current stations established	2

Chronometric determination of differences of longitude in Alaska; also latitude and magnetic determinations.—In March, 1896, as stated in the report for the last fiscal year, Assistant Fremont Morse was instructed to prepare for chronometric longitude determinations in Alaska, and Assistants Homer P. Ritter, F. A. Young, and Aid O. B. French were directed to report to him for

duty under his direction, joining him at a specified point on Puget Sound in time to connect with the steamer starting for Alaska early in April.

The plan of the season's work may be here recapitulated: Assistant Morse to occupy the astronomical station at Sitka, make the necessary time observations there, and rate his chronometers, while new stations at Kadiak Island and Unalaska were similarly occupied by Assistant H. P. Ritter and Aid O. B. French, respectively; Assistant F. A. Young to take charge of the chronometers to be carried on three or more successive round trips of the Alaska Commercial Company's steamer *Dora*, and to intercompare them daily; the carried chronometers, twenty-one in number, to be carefully compared with those of each of the three astronomical stations on each arrival and departure of the steamer, both by Assistant Young and the astronomer of the station; the latitude of the Kadiak and Unalaska stations to be carefully determined by a sufficient number of astronomical observations, and the magnetic elements, declination, dip, and intensity to be determined at all three stations; also topographical surveys of the harbors and adjacent country to be made as opportunity offered without interfering with the main work of the expedition; all parts of the work to be under the general direction and supervision of Assistant Morse.

Assistant Morse left San Francisco by steamer on March 25, was joined by the other members of the party on reaching Port Townsend, took passage on the steamer *City of Topeka* at Seattle April 2, and reached Sitka on the 8th. Here, in accordance with the programme outlined, Mr. Morse landed with his instruments and the other observers transferred their outfits to the steamer *Dora*. On account of unfavorable weather, time observations at Sitka were not obtained prior to the departure of the *Dora* on the 9th, but all the chronometers, thirty-two in number, were carefully intercompared.

Messrs. Ritter and French reached their allotted stations on the 14th and 19th of April respectively and immediate preparations were made for the beginning of the observations, but at both stations bad weather prevented the securing of time determinations before the departure of the steamer. First observations were secured at Sitka on the 11th and at Kadiak and Unalaska on the 21st. The third round trip was completed in July, but owing to the partial failure of the first half of the first a fourth round trip was deemed necessary, and that was completed by August 1. The last half of the fourth trip was also defective owing to bad weather at Kadiak, the last observations there being eight days before the arrival and departure of the steamer, so that out of the four trips only three good determinations were obtained.

At Sitka Assistant Morse obtained time observations on forty-two nights, and during July three days were devoted to magnetic observations, declination, dip, and intensity. At Kadiak much cloudy and rainy weather was experienced, but Assistant Ritter observed time on twenty-six nights and latitude on nine nights, and made magnetic determinations on three days; he also trigonometrically connected his astronomical station with that of 1867, the position of the latter being approximately recovered, but not being conveniently situated for the longitude work, as it was too far distant from the steamer landing. At Unalaska the weather conditions were unfavorable also, but the requisite number of time and latitude observations were obtained. The magnetic elements were also determined on three days and a base line 1·77 kilometres in length was measured. From this base a small scheme of triangulation was carried to the head of Captains Bay, and a topographical survey, comprising an area of 20 square miles, and including the town and harbor of Unalaska and Dutch Harbor, was executed. While en route to Sitka, at the close of the work, Mr. French took advantage of the stoppage of the steamer at Unga to make sextant observations there for latitude and time.

Messrs. Ritter, French, and Young, on the completion of the fourth round trip of the *Dora*, reported to Assistant Morse at Sitka on the 1st of August, and the entire party on the 7th took passage on the *City of Topeka* for Puget Sound. On arriving at Port Townsend Assistants Young and Ritter were detached from the party, the former in accordance with instructions proceeding to Washington, D. C., and the latter to Utah for the purpose of joining the party of Assistant Eimbeck. Messrs. Morse and French then proceeded to San Francisco and there completed the records and computations of the season's work. The subsequent services of the various members of the party will be noticed elsewhere in this report.

Survey of the Pribilof Islands, Bering Sea, Alaska.—In April, 1897, Assistant Will Ward

Duffield was directed to organize a party at Seattle or San Francisco for the survey of the Pribilof Islands, Bering Sea, Alaska, and Assistants Fremont Morse, G. R. Putnam, and G. L. Flower were directed to report to him to assist in the work. Seattle was reached on the 30th of April and the party was organized by May 3. The revenue cutter *Bear* furnished transportation, landing the party at Unalaska on May 19 for astronomical observations, and finally at St. Paul Island of the Pribilof group on May 25. The remainder of the fiscal year was spent in base measurement and triangulation and preparations for the topographical work. Five short subsidiary bases for the seal rookery surveys were measured, their lengths varying from 400 to 600 metres and 180 points were marked for future reference. A base 4422 metres in length was also measured for the principal triangulation, twenty-one signals were erected and thirteen stations were occupied, thus completing the triangulation of St. Paul Island. The necessary astronomical observations for time, latitude, and azimuth were also made when weather permitted. The party being still in the field, the further account of its operations is deferred and will appear in the next annual report.

SPECIAL OPERATIONS.

Magnetic and gravity observations at various points in British North America and Greenland—the Greenland expedition.—In the latter part of June, 1896, Assistant G. R. Putnam was authorized by the Honorable Secretary of the Treasury to accompany the exploring expedition about to start for Greenland under charge of Prof. A. E. Burton, and on July 2 left Washington for the purpose of looking after the instruments, which had to be placed on a steamer at Boston on July 4 and to be again transferred at Halifax and Sydney. While at Halifax, Assistant Putnam made magnetic observations at the same station, in Her Majesty's dockyard, occupied by Assistant J. B. Baylor in 1879, and on July 11, 12, and 13, while waiting the arrival of the steamer *Hope*, which was to carry the expedition northward, magnetic and pendulum observations were made at Sydney, Cape Breton. The *Hope* sailed from Sydney on the 16th, bearing Lieut. R. E. Peary and party, Prof. A. E. Burton and party, and others. On the 20th, a few hours' stop was made at Turnavic, Labrador, and Assistant Putnam availed himself of the opportunity to secure magnetic observations. After considerable delay from ice on the Labrador Coast, the vessel entered Hudson Strait, and the parties landed at Ashe Inlet, where magnetic and gravity observations were obtained on the 25th and 26th. After being prevented by ice from entering Cumberland Sound, the *Hope* steamed across Davis Strait to the Greenland Coast, making a first stop at Godhavn, the capital of North Greenland, and here magnetic determinations were made on the 3d of August. On August 5 the Burton party was landed at Umanak and the *Hope* proceeded farther north. At Umanak Assistant Putnam made pendulum observations from the 8th to the 12th and magnetic observations on the 14th, 15th, and 18th. The remainder of the month was spent in making computations, duplicating records, etc., and opportunity was found to forward a set of the records by means of a Danish vessel sailing for Copenhagen. Early in September Mr. Putnam accompanied Professor Burton's party on an expedition to the Itiodliarsut glacier, and assisted in the glacial investigations that were made. The party returned to Umanak on the 8th and the following day the *Hope* returned and took them on board. On the 11th Godhavn was again touched at and the magnetic observations were repeated. After encountering a severe storm in crossing Davis Strait and being delayed three days in the ice off Cape Mercy, the *Hope* entered Cumberland Sound and landed the party at Niantilik, where magnetic and pendulum observations were obtained on the 17th and 18th. After steaming south along the Labrador Coast, Sydney was reached on the 26th, and additional magnetic observations were made the same day. Assistant Putnam then returned to Washington and reported for further duty. The results of the voyage, so far as the work of this Survey is concerned, may be summarized as follows: Magnetic observations were made at seven stations, at two of them both going and coming; at a number of these points the results will be of interest in studying the secular variation of the magnetic elements, as they have been previously occupied by earlier explorers, and in several cases the exact point of observations was recovered and used. Two of the stations in Cumberland Sound and Hudson Strait are comparatively near the magnetic pole, the dip being about 84° and the horizontal force so weak that changes of several degrees in the direction of the horizontal needle took place in a few hours. Pendulum observations for the determination of the force of gravity were made at four stations, at two of which, however, they were not complete because unfavorable weather and the short stay of the ship prevented the obtaining of satisfactory observations. At the most northerly station, Umanak, the observations were fortunately quite complete. This point is in latitude 70° 41′ north, well therefore within the Arctic Circle and nearly as far north as Point Barrow in Alaska.

In the chart of pendulum stations recently published by Professor Helmert, in the Report of the International Geodetic Association for 1896, there appear no observations for this region, and those obtained by Assistant Putnam will therefore be of special interest to the scientific world.

Mr. Putnam in his report expresses his appreciation of the courtesy shown him by Lieut. H. E. Peary, Prof. A. E. Burton, and the various members of the party, and the valuable assistance rendered him from time to time. He also specially refers to the courtesy of Mr. Hjalmur Kunhtsen, governor of the Danish Colony of Umanak, who placed a house at his disposal, in which the pendulum observations were made, and did everything in his power to make the stay of the party pleasant. For facilitating the work, thanks are also due to Capt. John Bartlett, of the *Hope;* Mr. Andersen, inspector of North Greenland, Mr. A. Vizard, storekeeper of Her Majesty's dockyard, Halifax, and Mr. J. P. Fairbanks, proprietor of the Sydney Hotel, Sydney, Cape Breton.

Assistant Putnam has prepared for publication two reports, on the magnetic and gravity observations, respectively, including in the latter all pendulum observations made by him during 1895 and 1896, and these papers will appear as appendices to this report.

Mr. Putnam before again taking the field also performed miscellaneous office duties, among which may be mentioned the determination of the corrections of three standard salinometres and the densities of a large number of sea-water specimens stored in the archives of the Survey. His further field services have already been noticed under the head of Alaska Division.

Latitude determinations at Dover, Del., and Round Hill and Leesburg, Va., with a view to the selection of stations for the International Latitude Service.—The International Geodetic Association, having in view the continuous and simultaneous observation of variation of latitude at a number of stations, has at various times during the year corresponded with this office on the subject and requested our cooperation in the matter of the selection of suitable sites for the observatories.

The following translation of an extract from a communication signed by Prof. F. R. Helmert states the case concisely, and enumerates the points to be considered in making the selection of the two North American stations:

"There are two projects for this which were proposed by Messrs. Foërster and Van de Sande-Bakhuyzen. M. Foerster proposes four stations on the same parallel, while M. Bakhuysen thinks that greater advantage will come from the stations being placed in the vicinity of established observatories, and he believes that with the same sum of money seven or eight stations can thus be arranged for. (Compare the proceedings of Lausanne, pp. 99 to 100.) The Central Bureau desires to carry out Foerster's project, for reasons which were given by me in the Lausanne proceedings, provided that it is possible to find four stations suitable in all respects for the work, and at which the observers would be able to live comfortably. The latitude 39° 8′ is fixed upon, on which, besides the stations Cagliari and Midsusawa, two North American stations will be chosen. For the latter, Dover in the east and Ukiah in the west have been thought of, in which places favorable meteorological and seismological conditions exist. In place of Dover another station which would be more accessible to Washington could be very well substituted; for instance, Round Hill, Va. One might also think of the observatory of Cincinnati, but the mathematical conditions in this place are less favorable than in Dover. In place of Ukiah a station in the Sacramento Valley might be taken, where the meteorological conditions are also very favorable. It is now desired that a local investigation be made at the places named as soon as possible, where, naturally, the latitude to the nearest ten seconds must be measured in order that one may not depart too far from the parallel 39° 8′. Besides favorable meteorological conditions, the station must be so situated that equal conditions of atmospheric refraction exist to the north and south, and for the same reasons it is desirable that profiles of the surface, as well as the vegetation, should be nearly the same to the north and south, and also that changes of these conditions are not probable in the future.

It is also to be taken into consideration whether the situation of the observatory can be retained for, say, one hundred years, and also whether new constructions are to be expected. A change in the locality would be very difficult, as it could not be made without a long corresponding series of observations on both the old and new stations, all of which would entail great expense. It is therefore necessary that the site should be purchased by the United States Government, or in some other way its permanence assured. The topography around the station both far and near should be, if possible, made evident by sketches or charts, by means of which, also, the relation of the heights should be indicated. Although according to what has just been said it appears desirable that the stations should not be too near an inhabited locality, yet, on the other hand, it is desirable that houses should be near where the observer could subsist. In general it may be said that the reply in regard to the question of subsistence of the observer in the chosen station is of the greatest importance.

In regard to the local investigations to be carried out, I have to remark that the expenses thereby incurred would be borne by the International Geodetic Association, but at the present time no money of any great amount is available, so that it will be necessary to make the expenses as small as possible.

It appears to me that a reconnaissance for the Western stations presents some difficulties as to traveling expenses from Washington, which would be very heavy; but if the Coast Survey has not an officer in the neighbor-

hood engaged on other work, possibly the greater part of the expense could be saved by sending someone from San Francisco or from the Lick Observatory. I take it that the arrangement of the expenses later will present no serious difficulties."

In accordance with the preceding request, Assistant C. H. Sinclair was directed to make latitude determinations at each of the three Eastern stations named, and in case of the results differing more than half a minute from the desired value to make an examination of the country in the required direction to ascertain its availability for a station, special attention being paid to the requirements enumerated by Professor Helmert. At Dover the observations were made in May in connection with, or rather incident to, the longitude determination already mentioned in the proper geographical sequence. The latitude of the Dover Courthouse was found to be 39° 09′ 14″, or slightly north of the prescribed limit of 39° 08′ ± ½′, and therefore the country to the south was examined.

Mr. Sinclair reports that a suitable location can be found in the required latitude, and has indicated its position on a sketch accompanying his report. The observations at Round Hill and Leesburg were made in June. At Round Hill Mr. Sinclair occupied a point in a pasture field a short distance northwest of the railroad depot, and found its latitude to be 39° 08′ 15″. The town of Round Hill lies entirely to the south of this point, stretching along the road for a distance of half a mile. The country is heavily rolling, but the topography is quite uniform in character. Fine growths of locust, oak, chestnut, hickory, and other deciduous trees exist, but the larger part of the country has been cleared for cultivation. About 3 miles to the westward are the heights of the Blue Ridge, but Round Hill itself has an elevation of 600 feet above sea level. The same character of country is found at Purcellville to the westward, and at Hamilton, 6 miles to the eastward, both points having nearly the same latitude as Round Hill. At Leesburg Mr. Sinclair's station was located in the grounds of the Leesburg Academy, but its latitude was found to be only 39° 07′ 07″, or about half a mile too far south. It was found, however, that a suitable site in the required latitude was obtainable. Leesburg lies 2 miles east of the Catoctin Mountains and 12 miles east of Round Hill, and has an elevation of 400 feet above sea level. Assistant Sinclair reports that the mail facilities and conveniences for living are superior at this station to any of the others examined, and that the climatic and other conditions are about equal. Sketches of the localities examined, showing the proposed sites for the observatories, accompany Mr. Sinclair's report. The magnetic observations made at Dover, Round Hill, and Leesburg have already been mentioned under the proper geographical headings. On the completion of the observations and examinations Assistant Sinclair returned to Washington and was engaged on his computations during the few days remaining of the fiscal year.

Laying out of a speed-trial course for naval vessels in Chesapeake Bay.—In compliance with the request of the Navy Department for the laying out and marking of a speed-trial course, 24½ nautical miles in length, in Chesapeake Bay, for the speed trials of torpedo boats 3, 4, and 5, Lieut. Commander A. Dunlap, U. S. N., commanding the steamer *Blake*, was directed to prepare that vessel for the work, and Lieut. E. H. Tillman, U. S. N., with the schooner *Matchless*, was directed to report to him and render such assistance as might be required. Assistant D. B. Wainwright, with his aid, R. B. Derickson, was also instructed to execute the necessary triangulation, the scheme being so arranged as to be available for and form part of the regular triangulation of the Chesapeake Bay resurvey. The *Blake* left Baltimore on the 17th of March, Messrs. Wainwright and Derickson having joined the vessel the previous evening, and reached the locality of the course the next day. Lieutenant Tillman, with the *Matchless*, reported on the 22d, having been detained by fogs and head winds.

The site selected for the trial course may be briefly described as follows: It lies nearly parallel to and somewhat to the eastward of the axis of the bay; its north end is opposite Parkers Creek, and its south end is opposite Point no Point, or about 7 miles above the mouth of the Potomac River. A search was first made for old trigonometrical stations, but these, with two exceptions, had disappeared, and it was necessary to execute a new triangulation over a section of the bay 35 miles in length, the average width being 10 miles. Eleven signals were built, and 7 of these, together with 4 lighthouses, were occupied with a theodolite for the measurement of the horizontal angles. The angular measurements were begun on the 27th, and continued without interruption, save from bad weather, until April 15. The computations were made as rapidly as

possible, and the line was then placed on the projection furnished for the purpose, the length of the course, as already stated, being about 24½ nautical miles. Meanwhile Lieutenant Tillman had established an excellent range for the southern end of the course, and it was deemed advisable to establish a similar one at the northern end. The east side of the bay was found impracticable for this purpose and the west side seemed scarcely less so, but Assistant Wainwright, after running a transit line back 2 miles, found that a good range could be obtained by cutting a vista through the trees or by building a high signal (80 to 100 feet). The time and expense necessary to accomplish this, however, caused the abandonment of the project, but the points were marked so that the range can be established at any time in the future if deemed essential. Small watch buoys were then placed to mark the positions for the larger buoys to be furnished by the Light-House Establishment, and on the 21st the lighthouse steamer *Maple* arrived with the larger buoys, which were all placed in position the same day, their positions being determined by simultaneous observations with two theodolites stationed on shore. On checking the positions next day all were found accurate excepting that of the buoy marking the south end of the course, which had to be shifted somewhat. The buoys at the end of the course are first-class can buoys and are anchored with sinkers weighing from 3 000 to 3 200 pounds, and the five intermediate ones are second-class can buoys with sinkers of from 1 500 to 1 800 pounds. Beginning on the range at the southern end at a point 4·9 miles E ¾ N from Point no Point trigonometrical station, the course runs N by W ½ W to the northern terminal, which is 4·6 miles from Parkers trigonometrical station and 3·35 miles west by north from James Point Station. The field work was completed on the 23d of April, and the *Blake* and *Matchless* returned to Sparrow Point and Baltimore, respectively, the latter resuming her regular tidal work in that locality. Assistant Wainwright and Aid Derickson left the *Blake* on her arrival and proceeded to Washington, where they were engaged on office work to the close of the fiscal year. The reports of Lieut. Commander A. Dunlap and Assistant D. B. Wainwright contain much interesting information concerning the changes that have have occurred in the hydrography and topography of this portion of Chesapeake Bay since the date of the old survey, and Mr. Wainwright has also submitted a scheme for the continuation of the triangulation northward to a junction with that already executed above Kent Island.

The statistics of the trigonometrical work of Assistant Wainwright's party may be summarized as follows:

Area of triangulation, in square statute miles	400
Number of 40-foot tripod signals erected	8
Number of observing tripods and scaffolds erected	3
Number of stations occupied for horizontal angles	11
Number of geographical positions determined	18

Examination of a portion of the boundary line between Spartanburg and Greenville counties, S. C.—The north and south boundary line between the counties of Spartanburg and Greenville has been for some time in dispute, and various resurveys of it from time to time failing to agree, the board of commissioners of Spartanburg finally requested a local firm of civil engineers to make a true, accurate, and scientific survey of said line and determine its true and correct location. The report of these engineers, when received, did not meet the views of all members of the board and a resolution was then passed requesting the Member of Congress of the district to obtain from the Coast and Geodetic Survey the detail of one of its officers to examine and report upon the quality and accuracy of the work executed, due provision being at the same time made for defraying the expenses incident to the examination. In compliance with the terms of the resolution, submitted by Hon. Stanyarne Wilson, Assistant W. C. Hodgkins was instructed to proceed to Spartanburg to confer with the board of commissioners and make such examinations as might be found necessary. Mr. Hodgkins left Washington on the 11th of November, and was engaged on this duty until December 14. During this time he made a careful study of the historical features of the case, carefully weighed all the evidence submitted, and examined into the methods used in the various resurveys of the line. He also made magnetic observations at various points of the line, and found considerable local deflections, and these to a large extent account for the trouble in reestablishing the original boundary, which was of course laid out with a compass, and consequently followed a zigzag course.

The work of the local engineers was found to be of excellent quality, but they had proceeded on the assumption that the line should be a straight one from the northern terminus to the southern one, a point not conceded by all parties, and so laid it out, but the straight line, as was to be expected, failed to coincide with the original boundary at intermediate points; the location of the southern terminus, moreover, was also a point of controversy, there being no monument to mark the spot and some ambiguity in the description, but it seems to be fairly well established that the adopted position is not seriously in error. Assistant Hodgkins made an exhaustive report on the whole subject after his return to Washington, and copies were at once furnished to the board of commissioners and to Messrs. Ladshaw & Ladshaw, the engineers who executed the resurvey of the line. Mr. Hodgkins's further services will be noticed under the proper geographical headings elsewhere in this report.

Resurvey of Brunswick Bar, Georgia.—The river and harbor act of August 17, 1894, under item "For improving the outer bar of Brunswick, Georgia," authorized the payment to Mr. C. P. Goodyear of certain sums of money for the procurement at specified dates of channels of specified width and depth, the method of improvement being by the explosion of dynamite on the bottom.

The river and harbor act of June 3, 1896, amended some of the provisions of the former act, and further provided that the resurvey to determine the result of Mr. Goodyear's work should be made by an experienced officer of the Coast and Geodetic Survey, under the direction and supervision of the Honorable the Secretary of War. Mr. Goodyear in November reported that he had procured the necessary width and depth of channel, thus complying with the requirements of the acts above referred to, and requested an immediate survey. Lieut. Robert G. Peck, U. S. N., commanding the steamer *Bache*, was selected as the officer to represent the Coast and Geodetic Survey, and was directed to report to the Honorable Secretary of War for instructions. The repairs which the *Bache* was undergoing at New York were hastened as much as possible, but it was not until December 19 that the vessel was ready for sea. Sailing on that date, Lieutenant Peck reached St. Simon Sound on the 27th, but it was not until January 4 that the weather permitted the beginning of operations. The survey was finished April 16, after an exceptionally stormy and unfavorable season, which prolonged the work much beyond the time anticipated for its completion. Owing to the minute requirements as to widths and depths, the latter being determined to tenths of feet, more elaborate and precise methods of executing the survey were necessary than are customary in ordinary hydrographic work, and special care had to be taken to establish accurately the plane of reference (mean high water) to which the soundings were to be reduced. By a special device the tide-gauge readings were recorded to hundredths of feet and at intervals of five minutes. The positions of soundings were determined by sextant and theodolite angles taken from observing stations previously established on the bar. The sounding lines were run on ranges and at intervals of 25 feet, one system of lines parallel to the direction of the channel being crossed at right angles by another system similarly spaced. The scale chosen for the hydrographic sheet was necessarily a large one (1–1 250), to permit of the plotting of the large number of soundings and the accurate delineation of the contour lines. Nearly 30 000 soundings, out of about 39 000 taken during the survey, are shown on the sheet. On the completion of the work the *Bache* left Brunswick for New York, arriving at the latter point on the 27th of April. The office work was then prosecuted as rapidly as possible, and was completed before the close of the fiscal year. The hydrographic sheet and the original records of the survey have been forwarded to the Honorable the Secretary of War, and copies have been deposited in the archives of the Coast and Geodetic Survey. The results of the resurvey and their bearing on Mr. Goodyear's claims are matters with which this office has no concern, belonging properly to the report of the Honorable Secretary of War.

The statistics of the work have been tabulated as follows:

Distance run while sounding, in geographical miles	210½
Number of angles measured	14 386
Number of soundings taken	38 883
Number of tidal stations established	1
Number of hydrographic sheets completed	1

The naval officers comprising the party of the *Bache* were the following: Lieut. Robert G. Peck (in command), Lieut. H. K. Hines, Ensign A. H. Davis, Ensign F. M. Russell, Ensign F. B.

Sullivan, Chief Machinist A. J. Miskimon, Apothecary J. E. Shepherd, and Yeoman J. L. Dunn. Master at Arms Thomas S. Martin and Seamen John Craig and Andreas Andersen served as recorders.

Hydrographic survey to determine the value of improvements at the mouth of the Brazos River, Texas.—The river and harbor act of June 3, 1896, contained a provision for the appointment of a board of engineers, composed of a civil engineer, appointed by the President, an officer of the Corps of Engineers, U. S. A., to be selected by the Secretary of War, and an officer of the Coast and Geodetic Survey, to be selected by the Superintendent, to make an examination for the purpose of ascertaining the character and value of the improvements made at the mouth of Brazos River, Texas, by the Brazos River Channel and Dock Company. These improvements were undertaken with a view to removing the bar at the mouth of the river and deepening the channel from the mouth to Velasco. The members selected to comprise the board were the following: Col. H. M. Robert, U. S. E.; Robert Moore, C. E., of St. Louis, and Assistant Stehman Forney, United States Coast and Geodetic Survey. The board met in Washington, D. C., on December 11, 12, and 14, 1896, in Velasco, Tex., January 10 to 15, 1897, and again in Washington, D. C., to complete its report, February 15 to 18, 1897. The first requisite for the performance of the duties assigned to the board being a thorough survey to show existing conditions, a full hydrographic party, under the charge of Assistant H. L. Marindin, was detailed by the Superintendent and placed under the board's direction.

Assistant Marindin reported to Col. H. M. Robert, the president of the board, in accordance with instructions, and at once proceeded to Velasco, Tex., accompanied by Assistant A. L. Baldwin, Aid C. C. Yates, and Oscar M. Strauber, an expert leadsman of the Coast Survey steamer *Blake*, and arrived at Velasco on the 25th of December.

After visiting Galveston, for the purpose of collecting data in regard to previous surveys, and securing descriptions of bench marks, etc., Assistant Marindin rejoined the party at Quintana on the 28th, and completed the preparations for the hydrographic survey, which was begun on the 4th of January. A small naphtha launch was chartered for the work, and from it all the soundings in the gulf and river were taken. The survey included the topography of the mouth and of the river as far up as Velasco, and the hydrography over the same limits and an area extending outward into the gulf about 2 miles, or about a mile beyond the sea end of the jetties.

Observations of tides and currents were also made, and lines of levels were run to connect the tide gauges with the various bench marks; a trigonometrical connection was also successfully made with the old triangulation of 1852, the latter work, however, not without vexatious delays in the recovery of old stations. The old points recovered were "Brazos" and "Oyster Creek," the former in the city of Velasco and the latter about 6 miles to the eastward; none of the stations on the intermediate shore of the gulf could be recovered, having long since been obliterated by the encroachment of the sea or other causes.

From the line "Brazos"–"Oyster Creek" as a base, all the stations of 1894 and 1897 at the mouth of the river, including Brazos River lighthouse and several minor lights on the jetties, were determined.

In locating the soundings taken outside, two observers with instruments were stationed on shore at suitable points, and as a precautionary measure a third angle was measured on board the launch; for the river soundings, angles on distant signals were measured from the roof of the launch, the shores being low and the land flat, and the waters of the river being at flood height. A plane-table survey of the shore line and jetty lines was found to be indispensable, as it appeared that a shift in position of the stream equal to about half its width had taken place since the previous survey, or that the positions of the shore line as furnished by the improvement company in 1894 were erroneous.

Five tide staffs were set up at various points, which, together with the self-registering gauge at the land end of the west jetty, made six points of tidal observation. The board did not deem an extensive series of current observations necessary, and consequently only a few current stations were occupied. The weather during a considerable portion of the season was unfavorable for field work, and on the 24th of January a severe "norther" set in, which lasted until the 29th, the temperature ranging from 10° to 20° below freezing point; the land was covered with a sheet of ice,

so that cattle were without food and many perished. The survey was completed, however, on the 27th, the party was disbanded on the 29th, and Assistant Marindin and the officers of the party then returned to Washington. A complete map showing the results of the survey was prepared and furnished to the board, the original field sheets being deposited in the archives of the Coast and Geodetic Survey.

All the expenses incident to the Brazos River work, excepting the salaries of the officers engaged, were paid by the board from the appropriation made by Congress for the purpose.

The report of the board was presented to Congress on the 19th of February, 1897, and has been published as "Senate Document No. 138, Fifty-fourth Congress, second session," and Assistant Marindin's report to the board is published in full therein as Appendix C. It would not be proper here to enter into a discussion of the results of the survey in their bearing upon the work executed by the Brazos River Channel and Dock Company, that being the function of the board and a matter coming under the jurisdiction of the Honorable Secretary of War, and the reader is therefore referred to the document above mentioned for information on that subject.

The statistics of Assistant Marindin's work may be thus tabulated:

Area of triangulation, in square statute miles	11
Number of signal poles erected	7
Number of stations occupied by horizontal angles	7
Number of geographical positions determined	16
Length of coast line surveyed, in statute miles	1
Length of river shore line surveyed, in statute miles	15
Length of roads surveyed, in statute miles	1
Area sounded, in square geographical miles	4½
Distance run while sounding, in geographical miles	87
Number of angles measured	2 472
Number of soundings taken	6 610
Number of tidal stations established	5
Number of current stations observed	5
Length of lines of spirit leveling, in statute miles	7
Number of topographic sheets completed (shore line only)	2
Number of hydrographic sheets completed	1
Scale of topographic and hydrographic sheets	1–5 000

Resurvey of the boundary line between the United States and Mexico.—At the close of the last fiscal year Assistant A. T. Mosman, the United States Coast and Geodetic Survey member of the International Boundary Commission, was still on duty in Washington, completing the office work incident to the recent survey of the boundary line between the United States and Mexico. From July 1 to September 30 of the present fiscal year he was engaged in directing the drawing and engraving of the maps and profiles relating to said boundary line and in assisting in the preparation of the final report of the commission. The work was completed at the date last mentioned, and Assistant Mosman was then directed by the Honorable Secretary of State to report to the Superintendent of the Coast and Geodetic Survey for his regular duty. He was then engaged on important office work, mainly computations, until April 7, 1897, when he was assigned to field duty on the primary triangulation of Vermont and New York and its extension into Canada at Montreal. The account of this work will be found in its proper geographical sequence elsewhere in this report.

Laying out of a speed trial course in San Francisco Bay.—In May, 1897, in accordance with the request of the Navy Department, the party of the steamer *Gedney* under the command of Lieut. Commander A. P. Osborn, U. S. N., engaged in the hydrographic resurvey of San Francisco Bay and Harbor, was directed to lay out a 1-mile speed trial course for naval vessels. A site was selected in the vicinity of Angel Island and Bluff Point, and the line, known as the Bluff Point trial course, was soon laid out and suitably marked. The necessary triangulation was executed by Assistant E. F. Dickins, who was detailed for that purpose by Assistant A. F. Rodgers in charge of the San Francisco suboffice.

Hydrographic examination of San Pedro and Santa Monica Bays, California.—The board organized by the Honorable Secretary of War, in accordance with the provisions of the river and harbor act of 1896, for the selection of a suitable site for a deep-water harbor in southern California,

having requested the detail of a vessel and hydrographic party to make under its direction the necessary hydrographic examinations and surveys in San Pedro and Santa Monica bays, the steamer *Gedney* was assigned to this duty, and her commanding officer, Lieut. A. P. Osborn, was directed to report to Admiral J. S. Walker, the chairman of the board. The *Gedney* sailed for San Pedro on the 13th of December, and between that date and February 27 made a complete hydrographic examination of San Pedro and Santa Monico bays and a survey of the inner harbor at San Pedro. The results of the work are plotted on three hydrographic sheets of various scales and the general statistics are as follows:

Area sounded in square geographical miles	33
Miles (geographical) run while sounding	167
Number of angles measured	2 124
Number of soundings taken	5 806

It may be here mentioned that Assistant A. F. Rodgers served as a member of the board and attended its various meetings at Washington, D. C., and in California.

On the completion of the surveys and examinations the *Gedney* returned to San Francisco and resumed her regular work.

Seal investigations at Guadalupe Island, northwest coast of Mexico.—As stated under the head of "Hydrographic resurvey of San Francisco Bay and Harbor," the steamer *Gedney*, Lieut-Commander A. P. Osborn, U. S. N., commanding, was for a time taken off that work and by direction of the Honorable Secretary of the Treasury placed at the service of Dr. D. S. Jordan, president of the Leland Stanford University, for the investigation of fur-seal rookeries in the island of Guadalupe, northwest coast of Mexico. Dr. Jordan was finally unable to accompany the expedition and designated Dr. Wilbur Thoburn to take charge in his place. Dr. Thoburn and Professors Green and Wing, all of the Leland Stanford University, joined the vessel at Sausalito on the 13th of June, and the *Gedney* sailed for Guadalupe on the 15th, arriving there on the 21st after a brief stop at San Pedro for coal and water and certain necessary papers expected from the Mexican authorities. From June 21 to July 1 the ship and its steam launch were engaged in carrying the scientists to various parts of the island and the officers and crew rendered them such assistance as they required in securing and preserving specimens. During the same period a rapid running survey, or rather reconnoissance sketch, of the whole island was made and latitude observations were obtained at its northern and southern extremities. The objects of the expedition having been accomplished, the *Gedney* on July 1 sailed for San Francisco, reaching that point on the 8th.

Examination of the approaches to the Port Orchard Naval Station.—The Honorable Secretary of the Navy having in 1897 requested an immediate survey of the waters of Puget Sound adjacent to the Port Orchard Naval Station, Assistant J. J. Gilbert, who was engaged on the triangulation of Washington Sound, was directed to perform this duty.

On reaching Port Orchard in June, Assistant Gilbert found that a very minute survey of that part of the channel where the U. S. S. *Oregon* had grounded had already been completed, and the hydrography to be executed was therefore limited to the dredged channel affording entrance to the dry dock. The scale of the projection made for the purpose was 1–1 000 and soundings were taken at regular intervals of 5 metres. The number of soundings taken was 704. The topography on the same scale included such changes as had been made in the wharf and buildings, the addition of new roads, etc., and as much of the town of Bremerton as the limits of the sheet would permit. After completing this work, Assistant Gilbert also made a topographical survey of the water front and principal streets of the towns of Sidney and Charleston, to enable the office to locate these places on the charts.

After completing the survey Assistant Gilbert returned to San Juan Island and resumed the triangulation of Washington Sound.

Mount St. Elias Exploring Expedition.—In the spring of 1897 Prof. Henry G. Bryant, of Philadelphia, who was fitting out an expedition for the exploration of the region about Mount St. Elias and the ascent of the mountain, requested the detail of an assistant of the Coast and Geodetic Survey to accompany him and assist in the observations. The necessary authorization having been obtained from the Honorable the Secretary of the Treasury, Assistant E. B. Latham was

assigned to this duty, and was directed to report to Professor Bryant at Philadelphia on the 15th of May. A few days later the party started west and reached Seattle on the 23d. They sailed for Alaska on the 29th, by the steamer *City of Topeka*, reached Sitka on June 4, and on the following day proceeded by the steamer *Dora* to Yakutat Bay.

The work of the party will consist of reconnoissance, barometric determinations of elevations, azimuth observations, triangulation, and topography, and finally the ascent of Mount St. Elias. All expenses of the expedition are to be paid by Prof. Henry G. Bryant, and by special arrangement the results of the work are to be the joint property of Professor Bryant and the Coast and Geodetic Survey. No reports from the party had been received at the close of the fiscal year.

Mississippi River Commission.—Assistant H. L. Whiting continued to serve as a member of the Mississippi River Commission until the date of his death, February 4, 1897, and attended its meetings as follows: At New York, August 26 to 29; at St. Louis and on the semiannual tour of inspection to New Orleans, November 2 to 24. Soon after his decease he was succeeded by Assistant H. L. Marindin, whose appointment was confirmed by the Senate on the 22d of March. Mr. Marindin had previously been requested to attend a meeting of the commission at St. Louis, Mo., and immediately on receipt of the notification of his confirmation proceeded to that point, arriving on the 24th of March, just in time to join the commission on their high-water inspection tour to New Orleans. He was engaged upon this duty until April 2, when he reached Washington and resumed his regular duty in the office. He participated in further meetings of the commission at St. Louis, Mo., in April, 1897, leaving Washington on the 27th and returning on the 2d of May, and at New York from June 23 to 28.

Assistant H. L. Whiting until the date of his death also served as chairman of the Massachusetts State Topographical Survey.

ABSTRACT OF OFFICE ANNUAL REPORTS, FISCAL YEAR 1897.

ABSTRACT OF THE ANNUAL REPORT OF THE ASSISTANT IN CHARGE OF THE OFFICE.

The report of the Assistant in Charge of the Office, Mr. O. H. Tittmann, is accompanied by the reports of the various chiefs of divisions, and these show in detail the progress made in the various branches of the work confided to their care. Mr. Tittmann served as Assistant in Charge of the Office throughout the year, and during brief absences of the Superintendent also acted in his place.

The computing division has continued under the charge of Assistant Charles A. Schott, and his report shows a large amount of computation, reduction, and discussion of field results accomplished during the year. Mr. Schott has also prepared and submitted for publication a series of valuable reports on various branches of the work, four of which will appear as appendices to this report, viz: No. 1, Distribution of the magnetic dip and intensity in the United States for the epoch January 1, 1900; No. 2, The telegraphic longitude net of the United States and its connection with that of Europe; No. 3, Resulting longitudes of Kadiak, Unalaska, and Unga, Alaska, as determined chronometrically from Sitka in 1896; and No. 4, Resulting heights from spirit leveling between Holliday and Salina, Kans., from observations of 1895.

The computing division in April, 1897, suffered a severe loss by the sudden death of Mr. Charles H. Kummel, an accomplished mathematician who had been connected with the Survey for nearly seventeen years.

The practice of detailing members of the field force to assist in the work of the computing division when not engaged on field duty or on the computation of their own field work has been continued with beneficial results. The following-named assistants thus served for the periods given: H. G. Ogden, from July 1 to December 12, 1896; F. A. Young, from September 8 to December 4, 1896; A. T. Mosman, from November 2, 1896, to April 7, 1897; Isaac Winston, from April 7 to May 15, 1897; J. B. Baylor, from June 21 to 30, 1897; and Aid W. Bowie, from April 19 to June 26, 1897.

The tidal division has remained in charge of Assistant H. L. Marindin, who also served as executive officer on several occasions, made a hydrographic survey of the mouth of the Brazos River, Texas, and served as member of the Mississippi River Commission. During his absences from the office Mr. L. P. Shidy acted in his place as chief of the tidal division. The services of Mr. Marindin in the field and as member of the Mississippi River Commission have been fully noticed under the head of "Field operations." His report of the tidal division shows a creditable amount of work accomplished during the year, and again calls attention to the desirability of an increase of the force in order to enable the office to utilize the great mass of tidal data which is constantly accumulating. Parts I and II of the Manual of Tides, by Mr. R. A. Harris, have been completed and will appear as appendices to this report; Part III of this work was first prepared and was published in the report of 1894.

Various members of the field force when not otherwise employed were detailed for short periods to assist in the work of the tidal division, viz: Assistants J. B. Baylor, J. A. Flemer, W. C. Hodgkins, C. H. Sinclair, and D. B. Wainwright during part of January, 1897; Assistant C. T. Iardella for a portion of June, 1897, and Aid Albert F. Zust throughout the year.

The report of the drawing and engraving division is submitted by Assistant Stehman Forney, acting chief of the division, as the regular chief, Assistant Will Ward Duffield, has been engaged on field duty in Alaska since April. Messrs. Duffield and Forney have very successfully conducted the business of the division, and the report of the latter, which is printed in full, further gives in

detail the amount of work accomplished in the drawing, the engraving, the electrotyping, the photographing, and the chart-printing sections. Numerous calls for information from official and private sources have received prompt attention, and many of these required the preparation of drawings or tracings. In the drawing section 46 chart drawings were completed during the year, and a number of others are in progress; 21 original topographic sheets were inked and lettered; 23 topographic and 39 hydrographic projections were constructed for field parties. In the engraving section 51 copperplates of charts, sketches, and illustrations were completed and 76 are in progress, and 502 plates were corrected by the addition of new data from resurveys, etc. In the plate-printing section 1 109 plates were printed from, 53 012 impressions being struck off, 47 258 of which were transferred to the chart division. In the electrotyping and photographic section 43 bassos and 33 altos were completed, 18 being for the Mexican Boundary Commission, and 10 scroll die plates were made for the Bureau of Engraving and Printing, the whole representing a deposit of 2 015 pounds of copper on 82 565 square inches of surface; 160 negatives and 1 822 blue, silver, bromide, and nigrosine prints were also made.

The chart division has remained under the charge of Assistant Gershom Bradford, who has conducted its business in his usual thorough and efficient manner. His report gives full information as to the publication, distribution, and issue of charts during the year and the receipts therefrom. He also gives a table showing the chart distribution and receigts for each year from 1889 to 1897, from which it appears that the total distribution for 1897 is 11 per cent less than for the preceding year, but this is attributed to the fact that fewer new charts have been issued.

Mr. Bradford, in addition to his regular duties, has prepared a study of the inland water ways of the Atlantic coast of the United States from New York to Key West, and has compiled and prepared for publication a table of depths for channels and harbors of the coasts of the United States. The latter has been published as Bulletin No. 36.

The instrument division has continued under the able direction of Assistant J. F. Pratt, and his report gives full details of the work accomplished during the year in the instrument and carpenter shops. Mr. Pratt from September 28 to October 7 was absent on field duty, repairing and readjusting the Reedy Island tidal indicator, during which time the chief mechanician, Mr. E. G. Fischer, took charge of the division. Mr. Pratt makes special mention in his report of the reconstruction of a Gambey theodolite, the construction of a new tide-predicting machine, and certain improvements made in the self-registering tide gauges used by the Survey. He has prepared a paper on the latter subject, which will be published as an appendix to this report.

The miscellaneous division has continued under the charge of Mr. W. P. Ramsey, and his report contains the usual information relative to the distribution and sale of the various publications of the Survey and the numbers of each received during the year from the Public Printer. He has, as heretofore, attended to the business with the sales agencies and examined and verified their quarterly statements. Thirteen new agencies for the sale of charts and other publications were established during the year and 6 old ones were discontinued. The total number of agencies now existing is 109.

The library and archives division for the greater part of the year remained under the charge of Mr. H. S. King, but in the latter part of May he handed in his resignation and was granted leave of absence for the month of June. Mr. Artemus Martin was designated to act as chief during his absence, and was subsequently appointed to the position, the appointment taking effect July 1, 1897. Mr. Martin's report contains the usual statistical information relating to additions to the library and the receipt and registration of field records, topographic and hydrographic sheets, etc.

In the immediate office of the Assistant in Charge no changes occurred during the year, Messrs. A. B. Simons and E. B. Wills and Misses Sophie Hein and Kate Lawn continuing to perform their respective duties as heretofore.

ABSTRACT OF THE ANNUAL REPORT OF THE HYDROGRAPHIC INSPECTOR.

Lieut. Commander H. G. O. Colby, U. S. N., continued to serve as Hydrographic Inspector until December 23, 1896, at which date he was relieved by Lieut. Commander E. D. Taussig, U. S. N., an officer who had previously had considerable experience in the hydrographic field work of the Survey. Lieutenant-Commander Taussig has submitted a very full and detailed report of

all the hydrographic and other work executed during the year by the naval parties under his charge, accompanied by the usual reports of the office work of the Hydrographic and Coast Pilot divisions, which are also under his general direction. During the year the Hydrographic Inspector has visited and inspected all the naval parties in the field and their vessels, with a view to securing greater uniformity in the methods of work and at the same time enabling him to judge intelligently of the proper allotments to be made for repairs and party expenses. He highly commends the zeal and efficiency displayed by all the parties in the prosecution of the surveys assigned them, and reports that a very gratifying amount of work has in each case been accomplished. The repairs made during the year to the various vessels of the Survey, and the amounts of money expended in each case, are shown in detail, and the usual statistical tables also accompany the report. The hydrographic surveys of the year cover an aggregate area of 1 029 square nautical miles, and the aggregate length of lines of sounding run is 11 317 nautical miles, the number of angles measured to locate soundings is nearly 130 000 and the number of soundings taken over 570 000.

The hydrographic division continued under the immediate charge of Lieut. H. Rodman, U. S. N., until April 28, 1897, when he was assigned to sea duty. Lieut. G. Tarbox, U. S. N., chief of the coast pilot division, then assumed charge, filling at the same time both positions until June 15, when he was detatched, his services being required by the Navy Department. Lieut. J. C. Gillmore, U. S. N., reported for duty on the 19th of June, and assumed charge of the hydrographic division the same day. His report embraces the whole fiscal year, and shows that a very satisfactory amount of work has been accomplished. Forty-five hydrographic sheets were completed in this division, and these involved the examination of 308 volumes of records and the platting of over 123 000 angles and 436 000 soundings. Besides this a large amount of miscellaneous work received attention; 277 drawings and proofs of charts were verified, 149 miscellaneous drawings and tracings were made, 5 679 charts were corrected to date, from data obtained from field surveys and resurveys, and comparisons of old and new surveys were made. The monthly Notices to Mariners were also compiled and prepared for publication. Lieutenant Gillmore confirms the reports of his predecessors as to the zeal and efficiency of the employees of the division, and has words of commendation for all.

The coast pilot division continued under the immediate charge of Ensign Glennie Tarbox, U. S. N., until June 15, 1897, when he was recalled by the Navy Department, as already stated above. He was succeeded on June 19 by Lieut. J. C. Gillmore, U. S. N. The report for the year, however, is submitted by Ensign Tarbox, who states fully the progress of the work and makes valuable suggestions regarding its future conduct. The compilation of Part VIII of the Coast Pilot, including the whole Gulf Coast from Key West to the Rio Grande, was completed and sent to the printer in December, and was finally issued early in April. Supplements to Parts IV and V, containing additional information and corrections to date, have also been completed. A second edition of Part VI, embracing Chesapeake Bay and its tributaries, is in course of preparation, and much material for it is already on hand. As some time must elapse, however, before this can be completed, as extensive field surveys remain to be made, a supplement to the first edition, containing the important information now available, has been prepared and is now in press. The coast pilot division has also been charged with the selection and establishment of ranges at various points by which mariners may determine the deviation of their compasses. This important matter has never before received the attention it deserves, and the ranges now being established will prove of great value to the maritime interests. The ranges will be fully described in later editions of the Coast Pilot, and their true and magnetic bearings will be given. They will also be shown as far as practicable on the Coast Survey charts.

The Hydrographic Inspector's report and the accompanying reports of the chiefs of the hydrographic and coast pilot divisions are printed in full further on under the title of Office Report No. 2.

ABSTRACT OF THE ANNUAL REPORT OF THE ASSISTANT IN CHARGE OF THE OFFICE OF STANDARD WEIGHTS AND MEASURES.

This important office has continued under the charge of Assistant Andrew Braid, whose annual report is published as Office Report No. 4. The usual amount of work for other departments of the Government and for outside parties has been accomplished, and prompt response has been made to the numerous calls for information. Assistant Braid urges the necessity of increased appropriations for the purpose of enabling the office to acquire instruments which are necessary for the electrical standards work about to be undertaken, and provision therefor has consequently been made in the estimates submitted for the fiscal year 1899. The work of the year has principally consisted of the verification, adjustment, and standardization of various standards of length, weight, and capacity, thermometers, alcoholometers, salinometers, etc., but special mention is made of certain important operations not of the regular routine order. The results for the year have been highly satisfactory, and it is gratifying to observe the growing recognition and appreciation of the importance of the work of this office, not only by other departments but also by the general public. Since the close of the fiscal year important work in connection with the testing and standardization of polariscopes and other apparatus used by the customs service in determining the rate of duty to be imposed on import sugars has been undertaken and is now in progress. This work belongs to the fiscal year 1898, but it is merely referred to here as apropos to the subject under consideration. A tabular statement of the verifications, standardization, etc., for other departments or bureaus and for outside parties accompanies the weights and measures report.

Assistant Andrew Braid, in addition to his duties as chief of the Weights and Measures Office, has attended to the preparation, compilation, and editing of the Superintendent's Annual Report, and served as a member of the advisory boards on instruments, publications, and library.

SUPERINTENDENT'S OFFICE.

The Superintendent in July, 1896, proceeded to the West coast for the purpose of inspecting the work of the Alaskan field parties and examining the various inlets reaching to the probable boundary line between southeast Alaska and British Columbia. He, accompanied by Lieut. H. Rodman, U. S. N., joined the steamer *Patterson* at Seattle on the 14th of July, and after visiting the head of Portland Canal, Clarence Strait, and Behm Canal, and the various inlets as far as Yakutat Bay, returned to Peril Strait and inspected the methods of surveying practiced by the naval officers on board the *Patterson*. Proceeding to San Francisco in August, he inspected the suboffice and the field parties engaged in the resurvey of San Francisco Harbor, and finally returned to Washington on the 14th of September. During this absence and subsequent briefer ones, Assistant O. H. Tittmann acted as Superintendent, Assistant E. D. Preston as Assistant in Charge of the Office, and Assistant H. L. Marindin as executive officer. Except for the periods mentioned, Assistant E. D. Preston served as executive officer throughout the year. The Office of Standard Weights and Measures, as stated in the preceding paragraph, remained throughout the year under the direction of Assistant Andrew Braid, who also had charge of the preparation of the Superintendent's Annual Report. Mr. G. L. Flower, having been promoted to a position on the field force, was succeeded as private secretary on July 22, 1896, by Mr. A. H. Bailey, who served for the remainder of the fiscal year. Mr. William B. Chilton served as clerk in the Superintendent's office throughout the year.

DISBURSING OFFICE.

Mr. R. J. Griffin served as disbursing agent until March 24, 1897, when he resigned, and was succeeded by Mr. Scott Nesbit, whose annual report giving a detailed statement of all expenditures made during the year is given in full as Office Report No. 3. No change has occurred in the clerical force of this office, Mr. N. G. Henry, Miss Ida M. Peck, and Mrs. Jennie H. Fitch having continued to perform satisfactorily their respective duties.

SUBOFFICE.

The suboffice at San Francisco, Cal., continued in charge of Assistant A. F. Rodgers throughout the year, but during his absences at Washington, D. C., and Los Angeles, Cal., on duty as member of the Santa Monica–San Pedro Deep Water Harbor Board, he was temporarily relieved by Assistants J. J. Gilbert and E. F. Dickins, the former acting from November 10 to February 8, and the latter from February 9 to April 3. Assistant Rodgers, in addition to the usual office work devolving upon him, has directed and exercised supervision over various field operations, such as the topographical resurvey of San Francisco Bay and Harbor, the incidental triangulation, the running of the Sausalito tidal station, sundry special examinations of reported dangers to navigation, and the establishment of a new astronomical observatory at Presidio and its connection with the old one at Lafayette Park. In the field and office work under his charge he has been aided at various times by Assistants J. J. Gilbert, E. F. Dickins, Fremont Morse, and O. B. French, and Messrs. Ferdinand Westdahl and Frank W. Edmunds. Mr. H. S. Ballard served as tidal observer throughout the year, and Mr. Vincent Denis has continued to perform messenger and miscellaneous duty.

OBITUARY.

On receipt of the intelligence of the death of Assistant Henry L. Whiting, the Superintendent called a meeting of the officers and members of the Coast Survey to take such action as they deemed advisable in the matter, and on their convening addressed them as follows:

GENTLEMEN: To-day's mail brings the painful intelligence of the sudden death of Assistant Henry L. Whiting at his home in Boston, Mass.

Mr. Whiting was the senior Assistant of the Coast Survey, his first appointment dating July 6, 1838. Had he lived until next July he would have served in that bureau fifty-nine years. He was born February 5, 1821, and died on the day preceding the anniversary of his birth, February 4, 1897, having nearly completed his seventy-sixth year.

The law which compels the withered leaf to fall, which gathers the ripened grain to its place of rest, is not a harsh and cruel, but a wise and benevolent one. We must not, therefore, rebel against its enforcement.

Mr. Whiting's life has been a busy one. He has made his mark upon the generation in which he lived. He has aided the world in its forward progress. But his task is finished, his work is done. His life has been fully rounded out and completed. He has outlived the three score years and ten which the Psalmist allots to suffering humanity; he has been gathered like a shock of grain fully ripe.

I have therefore taken the liberty of calling you together to decide what action you deem advisable in the matter of Mr. Whiting's death, and in what form you will give expression to that action.

Assistant Charles A. Schott moved that a committee of five be appointed by the Superintendent to act in the matter.

The Superintendent appointed Messrs. Schott, Mosman, Iardella, Marindin, and Tittmann as such committee.

At a subsequent meeting the following resolutions were adopted, and the Superintendent was requested to forward a copy of them to Mr. Whiting's relatives, with a biographical sketch of his services in the Coast Survey, such resolutions and sketch to be entered in the Superintendent's Annual Report.

RESOLUTIONS.

UNITED STATES COAST AND GEODETIC SURVEY,
Washington, D. C., February 6, 1897.

At a meeting of the members of the field and office force of the Coast and Geodetic Survey, called by the Superintendent for the purpose of giving expressions to the sense of the loss sustained by the Survey by the death of Assistant Henry L. Whiting, the following resolutions were passed:

(1) That in the death of Assistant Henry L. Whiting, the Survey loses its oldest officer in length of service, one identified with the Survey from the time of its first superintendent, Hassler.

That his able and faithful services during these fifty-nine years, and his fidelity to the public interests in the discharge of the various and responsible duties of his position, make his loss one to be deeply deplored.

(2) That the traits happily combined in his character, his absolute integrity, his unfailing courtesy and kindliness of heart, gained for him the respect and affection of his brother officers and all others with whom he has been associated, and the warm attachment of his friends.

(3) That the officers and members of the Survey assembled here to-day desire to have placed on record their expression of their great loss, both personal and official, and they would ask the privilege of extending their deep sympathy to the family of Mr. Whiting in their bereavement.

BIOGRAPHICAL SKETCH.

UNITED STATES COAST AND GEODETIC SURVEY,
Washington, D. C., February 6, 1897.

To the members of the United States Coast and Geodetic Survey:

It becomes my painful duty to announce to you the death of our oldest and most faithful Assistant of the Survey.

Henry L. Whiting, Assistant, Coast and Geodetic Survey, died at his home on Marthas Vineyard, Massachusetts, February 4, 1897, in the seventy-sixth year of his age, and in the fifty-ninth year of his services on the Coast Survey.

Assistant Whiting was born in Albany, N. Y., February 5, 1821, and entered the Survey in July, 1838, as topographer, and he was the last survivor who served under all the Superintendents the Survey has had. During his extraordinarily long career he most faithfully devoted his energies to his life's task, and it can justly be said that to him more than to anyone else is due the development of the art of topography on the Survey. How much his services were appreciated in this direction, and the confidence placed in his ability by the several chiefs of the Survey, are abundantly shown by the fact that he was from early times frequently called upon to inspect the field work of other survey parties, and that his counsel was sought in questions of improvement of navigation and investigations of changes in natural features of coast and harbor lines.

Though the field of his principal labors was on the coasts of Maine, Massachusetts, Rhode Island, and New York, we find him also engaged in special surveys along the coast as far south as Florida, and in 1876 he was directed to inspect the topography so far executed on our Pacific Coast and report as to the best manner of its continuation, under pressing conditions.

In 1866 he was detailed for a time as instructor in practical surveys to the Naval Academy at Annapolis. In 1869 his knowledge of the features of the coast was called for in the location of the trans-Atlantic cable at Duxbury, Mass.

It was, however, in the direction of the performance of larger and more responsible duties that he rendered the most important services. Thus, in 1884, we find him appointed as one of three commissioners to conduct the topographic survey of the State of Massachusetts, which afterwards developed into a complete trigonometric survey, including town as well as State boundaries. Of this work he has been director since 1892, and one of his last acts, but a few days ago, was in the interest of the continuance of the trigonometric survey of the State.

He was also a member of the board of harbor commissioners for Boston Harbor. A not less important position was filled by him as a member of the Mississippi River Commission. His appointment to the latter dates from June 10, 1890, and the duties connected therewith were faithfully discharged by him to the time of his death.

Since his appointment in 1884 as one of the commissioners of the topographic survey of the State of Massachusetts his active field duties as an Assistant of the Coast Survey have ceased. Yet he still retained the position of an Assistant, and as such represented the Coast Survey upon both the topographic survey of Massachusetts and the Mississippi River Commission.

With him a most useful life has passed away, and his devotion to his duties may serve as an example worthy to be followed.

Charles Hugo Kummell, computer, died at Washington, D. C., on the 17th of April, 1897, in the sixty-first year of his age. He was born at Wetter, Electorate of Hesse Cassel, Prussia, and was educated at the Polytechnic School at Cassel and at the University of Marburg. He came to the United States in August, 1860, and was engaged in teaching mathematics and music until appointed to a position on United States Lake Survey in 1871. He served with the Lake Survey until October 31, 1880, and in November of the same year accepted a position as computer in the office of the Coast and Geodetic Survey. The latter position he held to the date of his death.

Mr. Kummell was an able mathematician, and at various times contributed valuable mathematical papers and solutions of intricate problems to the mathematical and astronomical journals and to the annual reports of the Coast and Geodetic Survey. His knowledge and experience and his amiable disposition made him a valued member of the computing force of the office, and one whose loss is much and sincerely regretted.

Blank page retained for pagination

UNITED STATES COAST AND GEODETIC SURVEY REPORT FOR 1897.

PART I.

FIELD AND OFFICE DETAILS.

TABULAR STATEMENTS AND ANNUAL OFFICE REPORTS.

TABLE NO. 1.—Distribution of the field parties of the Coast and Geodetic Survey upon the Atlantic, Gulf of Mexico, and Pacific coasts, and in the interior of the United States during the fiscal year ending June 30, 1897.

TABLE NO. 2.—Statistics of field and office work of the Coast and Geodetic Survey for the fiscal year, and total to June 30, 1897.

TABLE NO. 3.—Information furnished to Departments of the Government in reply to special requests, and to individuals upon application, during the fiscal year ending June 30, 1897.

OFFICE REPORT NO. 1.—Report of the Assistant in Charge of the Office for the fiscal year ending June 30, 1897.

OFFICE REPORT NO. 2.—Report of the Hydrographic Inspector for the fiscal year ending June 30, 1897.

OFFICE REPORT NO. 3.—Report of the Disbursing Agent for the fiscal year ending June 30, 1897.

OFFICE REPORT NO. 4.—Report of the Assistant in Charge of the Office of Standard Weights and Measures for the fiscal year ending June 30, 1897.

Blank page retained for pagination

TABLE No. 1–1897.

Distribution of the field parties of the Coast and Geodetic Survey upon the Atlantic, Gulf of Mexico, and Pacific coasts, and in the interior of the United States, during the fiscal year ending June 30, 1897.

I.—EASTERN DIVISION—STATES EAST OF THE MISSISSIPPI RIVER.

1. Maine.
2. New Hampshire.
3. Vermont.
4. Massachusetts.
5. Rhode Island.
6. Connecticut.
7. New York.
8. New Jersey.
9. Pennsylvania.
10. Delaware.
11. Maryland.
12. District of Columbia.
13. Virginia.
14. North Carolina.
15. South Carolina.
16. Georgia.
17. Florida.
18. Alabama.
19. Mississippi.
20. Michigan.
21. Wisconsin.
22. Ohio.
23. Indiana.
24. Illinois.
25. West Virginia.
26. Kentucky.
27. Tennessee.

States.	Parties.	Operations.	Persons conducting operations.	Localities of work, etc.
Vermont, New York, and Canada.	No. 1	Primary triangulation.	A. T. Mosman, Assistant	Connection of Mount Royal, near Montreal, Canada, with the primary triangulation of Vermont and New York.
Massachusetts	2	Hydrography	Lieut. Commander A. Dunlap, U. S. N., Assistant.	Hydrography on the coast of Massachusetts between Gloucester and Manchester.
Massachusetts	3	Hydrography	Lieut. G. C. Hanus, U. S. N., Assistant.	Hydrographic resurvey of Buzzards Bay—upper part.
Massachusetts	4	Hydrography	Lieut. Robert G. Peck, U. S. N., Assistant.	Hydrographic resurvey of Buzzards Bay—vicinity of Woods Holl to Cuttyhunk; also determination of new position for the Nantucket South Shoal light-ship.
Massachusetts	5	Topography	Stehman Forney, Assistant, and William Bowie.	Topographic resurvey of Buzzards Bay.
Massachusetts	6	Topography	W. I. Vinal, Assistant	Topographic survey of Naushon Island.
Massachusetts and Rhode Island.	7	Hydrography	Lieut. J. J. Blandin, U. S. N., Assistant.	Special hydrographic examinations and surveys in Nantucket and Vineyard sounds and on the coast of Rhode Island.
Massachusetts	8	Topography	W. C. Hodgkins, Assistant	Topographical survey of Marthas Vineyard.
Massachusetts	9	Topography	W. I. Vinal, Assistant	Topographical survey of Marthas Vineyard.
Rhode Island	10	Triangulation	D. B. Wainwright, Assistant	Determination of the geographical positions of light-houses in Narragansett Bay and Providence River.
Massachusetts, New York, and Canada.	11	Longitude determinations, etc.	C. H. Sinclair, Assistant, and R. L. Faris, Assistant.	Telegraphic longitude determinations and magnetic observations at Albany, Cambridge, and Montreal.
Rhode Island and New York.	12	Hydrography	Lieut. W. S. Benson, U. S. N., Assistant; Lieut. J. J. Blandin, U. S. N., Assistant.	Hydrographic surveys to the southward of Block Island and off Montauk Point, and special examinations off Brightmans Beach, in Fishers Island Sound, and in Greenport Harbor.
New York	13	Topography	C. T. Iardella, Assistant	Continuation of the topographical resurvey of the southern shores of Long Island.
New York	14	Tidal observations	J. G. Spaulding, tidal observer.	Continuation of the tidal record and the automatic tidal indicator at Fort Hamilton tidal station, New York Harbor.
New Jersey, Delaware, and Maryland.	15	Triangulation	F. W. Perkins, Assistant; W. B. Fairfield, Assistant.	Extension of the transcontinental arc eastward to Capes May and Henlopen.
Delaware	16	Tidal observations	Dr. A. H. Glennan, U. S. Marine-Hospital Service.	Continuation of the tidal record and the automatic tidal indicator at Reedy Island, Delaware River.

Distribution of the field parties of the Coast and Geodetic Survey, etc.—Continued.

I.—EASTERN DIVISION—STATES EAST OF THE MISSISSIPPI RIVER—Continued.

States.	Parties.	Operations.	Persons conducting operations.	Localities of work, etc.
Delaware and District of Columbia.	17	Longitude, latitude, and magnetic determinations.	C. H. Sinclair, Assistant; O. B. French, Assistant.	Telegraphic determination of the difference of longitude between Washington, D. C., and Dover, Del.; also latitude and magnetic determinations.
District of Columbia.	18	Tidal observations.	Tidal division, U. S. Coast and Geodetic Survey Office.	Continuation of the tidal record at the tidal station at the U. S. Navy-Yard, Washington, D. C.
Maryland	19	Triangulation	D. B. Wainwright, Assistant	Resurvey of Chesapeake Bay and tributaries—Triangulation of Patapsco River and upper part of bay from Kent Island to Pooles Island.
Maryland	20	Hydrography	Lieut. Commander A. Dunlap, U. S. N., Assistant.	Resurvey of Chesapeake Bay—Hydrography in the vicinity of Baltimore Harbor entrance.
Maryland	21	Triangulation and topography.	J. A. Flemer, Assistant	Resurvey of Chesapeake Bay and tributaries—Triangulation and topography of Chester River.
Maryland	22	Triangulation	D. B. Wainwright, Assistant	Resurvey of Chesapeake Bay—Triangulation northward from the mouth of the Potomac River.
Virginia and Maryland.	23	Hydrography, etc.	Lieut. E. H. Tillman, U. S. N., Assistant.	Resurvey of Chesapeake Bay and tributaries—Hydrographic survey of the south branch of Elizabeth River; erection and determination of signals at Baltimore entrance; current observations at various points.
Virginia	24	Triangulation	J. B. Baylor, Assistant	Resurvey of Chesapeake Bay—Triangulation of the southern portion of the bay.
Virginia	25	Astronomical and magnetic.	C. H. Sinclair, Assistant	Latitude and magnetic determinations at Round Hill and Leesburg. (See also under head of Special Operations.)
Virginia	26	Magnetic	J. B. Baylor, Assistant	Magnetic determinations and establishment of meridian lines at Richmond, Accomac Courthouse, Norfolk, and Greenville Courthouse, Virginia.
South Carolina	27	Tidal observations	B. W. Weeks, tidal observer	Continuation and completion of the tidal record at Port Royal, S. C.
Georgia	28	Hydrography	Lieut. J. J. Blandin, U. S. N., Assistant.	Hydrographic resurvey of Savannah River entrance and Calibogue Sound to Braddock Point.
Georgia	29	Hydrography	Lieut. Robert G. Peck, U. S. N., Assistant.	Brunswick Bar. (See under head of Special Operations.)
Florida	30	Tidal observations	A. L. Baldwin, Assistant; B. W. Weeks, tidal observer.	Establishment of a tidal station at Fernandina, Fla.
Florida	31	Geodetic	H. G. Ogden, Assistant	Geodetic connection of the Atlantic and Gulf coasts of Florida.
Alabama	32	Triangulation	W. B. Fairfield, Assistant	Continuation and completion of the triangulation of the oblique arc in Alabama.
Mississippi	33	Precise leveling	Isaac Winston, Assistant	Precise leveling from Vicksburg to Meridian, Miss.

Distribution of the field parties of the Coast and Geodetic Survey, etc.—Continued.

II.—MIDDLE DIVISION—STATES AND TERRITORIES BETWEEN THE MISSISSIPPI RIVER AND THE ROCKY MOUNTAINS.

28. Minnesota.
29. North Dakota.
30. South Dakota.
31. Iowa.
32. Nebraska.
33. Missouri.
34. Kansas.
35. Arkansas.
36. Indian Territory.
37. Oklahoma Territory.
38. Louisiana.
39. Texas.

States.	Parties.	Operations.	Persons conducting operations.	Localities of work, etc.
Louisiana	No. 34	Triangulation, topography and hydrography.	P. A. Welker, Assistant	Survey of Lake Ponchartrain, Louisiana.
Texas	35	Hydrography	H. L. Marindin, Assistant	Hydrographic survey at mouth of Brazos River, Texas. (See under head of Special Operations.)
North Dakota	36	Magnetics	R. L. Faris, Assistant	Magnetic observations at Williston, Rugby, and Pembina. (See also under head of Western Division.)
Kansas	37	Precise leveling	Isaac Winston, Assistant	Precise leveling from Selina to Ellis—This is part of the transcontinental line of levels.
Kansas	38	Triangulation and base measurement.	F. D. Granger, Assistant	Transcontinental geodetic work—Measurement of a base line near Salina, Kans.
Kansas and Nebraska	39	Reconnaissance	F. D. Granger, Assistant	Reconnaissance in northern Kansas from the vicinity of the thirty-ninth parallel of north latitude to the northern boundary of Nebraska, along the ninety-eighth meridian of west longitude.
Missouri	40	Base measurement	A. L. Baldwin, Assistant	Measurement of a verification base at Versailles, Mo., for the transcontinental triangulation.

III.—WESTERN DIVISION—STATES AND TERRITORIES BETWEEN THE ROCKY MOUNTAINS AND THE PACIFIC.

40. California.
41. Oregon.
42. Washington.
43. Idaho.
44. Montana.
45. Wyoming.
46. Nevada.
47. Utah.
48. Colorado.
49. Arizona Territory.
50. New Mexico Territory.

States.	Parties.	Operations.	Persons conducting operations.	Localities of work, etc.
California	No. 41	Topography	A. F. Rodgers, Assistant	Continuation of the topographic resurvey of San Francisco Bay and Harbor, with incidental triangulation.
California	42	Hydrography	Lieut. Commander A. P. Osborn, U. S. N., Assistant.	Continuation of the hydrographic resurvey of San Francisco Bay and Harbor.
California	43	Hydrography	Lieut. James H. Sears, U. S. N., Assistant; Lieut. J. M. Helm, U. S. N., Assistant.	Continuation of the hydrographic resurvey of San Francisco Bay and Harbor.
California	44	Hydrography	Lieut. James H. Sears, U. S. N., Assistant.	Hydrographic examination of Santa Monica and San Pedro harbor. (See under head of Special Operations.)
California	45	Tidal observations	A. F. Rodgers, Assistant; H. S. Ballard, tidal observer.	Continuation of the tidal record at the Sausalito tidal station.
California	46	Astronomical, etc.	A. F. Rodgers, Assistant; Fremont Morse, Assistant; O. B. French, Assistant.	Determination of the latitude and longitude of the new astronomical station at Presidio.
California	47	Magnetics	H. P. Ritter, Assistant	Magnetic determination at San Jose, Hollister, Santa Cruz, Salinas, Soledad, San Lucas, Bradley, Santa Margarita, Port Harford, Santa Maria, Los Olivos, Santa Barbara, Ventura, Saugus, Palmdale, Mojave, Caliente, Asphalto, Delano, Visalia, Huron, Fresno, Mendota, Volta, Madera, Merced, Modesto, Altamont, Milton, Stockton, Santa Rosa, and Napa.

Distribution of the field parties of the Coast and Geodetic Survey, etc.—Continued.

III.—WESTERN DIVISION—STATES AND TERRITORIES BETWEEN THE ROCKY MOUNTAINS AND THE PACIFIC.—Continued.

States.	Parties.	Operations.	Persons conducting operations.	Localities of work, etc.
California	48	Magnetics	O. B. French, Assistant	Magnetic observations at Kramer, Barstow, Bagdad, Manvel, Blake, Oro Grande, San Bernardino, N. Pomona, Santa Monica, San Pedro, Newport Beach, Capistrano, Oceanside, La Playa, Foster, San Jacinto, Elsinore, and Indio.
California	49	Triangulation	E. F. Dickins, Assistant	Connection of the Los Angeles base line with the primary triangulation of the State; marking of terminals of the base line with granite monuments.
Oregon	50	Hydrography	Ferdinand Westdahl, Assistant	Examination of reported dangers in the approaches to the mouth of Coquille River, Oregon.
Washington	51	Triangulation and topography.	J. J. Gilbert, Assistant	Continuation of the survey of Washington Sound—Triangulation and topography of San Juan Island, &c.; also topographic and hydrographic examination of the approaches to the Port Orchard Naval Station. (For the latter, see under head of Special Operations.
Utah	52	Triangulation and base measurement.	William Eimbeck, Assistant	Geodetic work in Utah—Triangulation and measurement of the Salt Lake base line. This is a verification base of the great transcontinental arc.
Utah, Nevada, and Idaho.	53	Reconnaissance	P. A. Welker, Assistant	Reconnaissance for a primary triangulation from the line "Ogden"-"Pilot Peak" through Utah, Nevada, and Idaho, to extend ultimately through Montana to the forty-ninth parallel of north latitude—Preparations for active field operations completed at the close of the fiscal year.
Montana	54	Magnetics	R. L. Faris, Assistant	Magnetic observations at Harvard and Glasgow, Mont.

IV.—THE DIVISION OF ALASKA, INCLUDING ITS COASTS BORDERING ON THE PACIFIC OCEAN, ON BERING SEA, AND ON THE ARCTIC OCEAN; ALSO ITS INLETS, SOUNDS, BAYS, RIVERS, AND THE ALEUTIAN AND PRIBILOF ISLANDS.

Territory.	Parties.	Operations.	Persons conducting operations.	Localities of work, etc.
Alaska	No. 55	Hydrography and general surveys.	Lieut. Commander E. K. Moore, U. S. N., Assistant.	Continuation of hydrographic and general surveys in southeastern Alaska, viz: Peril Strait, Salisbury Sound, Sitka Sound, Neva Strait, and Alga Strait; tidal observations at Victoria, British Columbia, Esquimalt, Seymour Narrows, Sergius Narrows, and Sitka.
Alaska	56	Latitude, longitude, and magnetic determinations.	Fremont Morse, Assistant	Chronometric determination of differences of longitude at Sitka, Kadiak, and Unalaska; also latitude and magnetic determinations at the same points.
Alaska	57	General surveys	W. Ward Duffield, Assistant	Survey of the Pribilof Islands.

Distribution of field and office work of the Coast and Geodetic Survey, etc.—Continued.

SPECIAL OPERATIONS.

States.	Parties.	Persons conducting operations.	Localities of work, etc.
British North America and Greenland.	No. 58	G. R. Putnam, assistant	Assistant G. R. Putnam accompanied Prof. A. E. Burton's Greenland expedition and found opportunity to observe at the following places in British North America and Greenland: For magnetics at Halifax, Sydney, Turnavic, Ashe Inlet, Godhavn, Umanak, and Niantilik; for gravity at Sydney, Ashe Inlet, Umanak, and Niantilik.
Delaware and Virginia.	59	C. H. Sinclair, assistant	Latitude determinations at Dover, Del., and Round Hill and Leesburg, Va., with a view to the selection of stations for the International Latitude Service. Undertaken in cooperation with the International Geodetic Association, at the request of Prof. F. R. Helmert.
Maryland	60	Lieut. Commander A. Dunlap, U. S. N., assistant; G. B. Wainwright, assistant.	Laying out of a speed trial course in Chesapeake Bay for the speed trial of torpedo boats Nos. 3, 4, and 5. Work done at the request of the Navy Department.
South Carolina	61	W. C. Hodgkins, assistant	Examination of a portion of the boundary line between Spartanburg and Greenville counties, S. C. At the request of the county commissioners.
Georgia	62	Lieut. Robert G. Peck, U. S. N., assistant.	Hydrographic resurvey of Brunswick bar, under the direction and supervision of the Honorable the Secretary of War, in accordance with the provisions of the river and harbor act of June 3, 1896.
Texas	63	H. L. Marindin, assistant, under the direction of the board of engineers.	Survey at the mouth of Brazos River, Texas, to determine the value of improvements made by the Brazos River Channel and Dock Company. Made at the request of the board of engineers appointed in accordance with the provisions of the river and harbor act of June 3, 1896.
	64	A. T. Mosman, assistant and member of the Boundary Commission.	Continuation and completion of the office work and report of the International Boundary Commission, appointed for the purpose of relocating and marking that portion of the boundary line between the United States and Mexico from El Paso to the Pacific Ocean.
California	65	Lieut. Commander A. P. Osborn, assistant.	Laying out of a one mile speed trialcourse for naval vessels in San Francisco Bay. Done at the request of the Navy Department.
California	66	Lieut. Commander A. P. Osborn, U. S. N., assistant, under the direction of the Deep Water Harbor Board.	Hydrographic examination of San Pedro and Santa Monica bays, at the request and under the direction of the board organized under the provisions of the river and harbor act of 1896.
Mexico	67	Lieut. Commander A. P. Osborn, U. S. N., assistant.	Seal investigations at Guadalupe Island, northwest coast of Mexico, by Dr. Wilbur Thoburn and Professors Green and Wing, of Leland Stanford University. The steamer Gedney, by direction of the Honorable the Secretary of the Treasury, was placed at their disposal and carried the party and rendered such assistance in the collection of specimens, etc., as was required. A running survey or reconnaissance of the island was also made by Lieutenant-Commander Osborn's party.
Washington	68	J. J. Gilbert, assistant	Topographic and hydrographic examination of the approaches to the Port Orchard Naval Station. Made at the request of the Honorable the Secretary of the Navy.
Alaska	69	Prof. Henry G. Bryant	The Mount St. Elias Exploring Expedition was fitted out by Prof. Henry G. Bryant in the spring of 1897, and at his request Assistant E. B. Latham was detailed to accompany the expedition. Work contemplated includes reconnaissance, triangulation, topography, and the ascent of Mount St. Elias. Reports not received at the close of the fiscal year.

TABLE No. 2—1897.

Statistics of field and office work of the Coast and Geodetic Survey for the fiscal year 1897, and total to June 30, 1897.

	Total to June 30, 1896.	During fiscal year 1897.	Total to June 30, 1897.
RECONNAISSANCE.			
Area in square statute miles	458 500	3 439	461 939
Parties, number of	.....	2	.....
BASE LINES.			
Primary, number of	16	3	19
Primary, length of, in statute miles	105	16	121
Subordinate, number of	170	2	172
Subordinate and beach measures, length of	670	52	722
TRIANGULATION.			
Area in square statute miles	324 795	2 078	326 873
Stations occupied for horizontal measures, number of	14 997	115	15 112
Geographical positions determined, number of	28 118	265	28 383
Stations occupied for vertical measures, number of	1 157	20	1 177
Elevations determined trigonometrically, number of	2 782	38	2 820
Heights of permanent bench marks by spirit leveling, number of	1 048	42	1 090
Lines of spirit leveling, length of, in statute miles	5 115	192	5 307
Triangulation and leveling parties, number of	.....	17	.....
ASTRONOMICAL WORK.			
Azimuth stations, number of	264	4	268
Latitude stations, number of	422	7	429
Longitude stations, telegraphic, number of	177	6	183
Longitude stations, chronometric or lunar, number of	124	3	127
Astronomical parties, number of	.....	6	.....
MAGNETIC WORK.			
Stations occupied, number of	1 124	78	1 202
Magnetic observatories occupied, number of	5	.....	5
Magnetic parties, number of	.....	5	.....
GRAVITY MEASURES.			
Home stations occupied, number of	*61	.....	61
Foreign stations occupied, number of	28	4	62
Parties, number of	.....	1	.....

*Two stations added not heretofore counted.

NOTE.—Old stations reoccupied are not again included in the totals.

Statistics of field and office work of the Coast and Geodetic Survey, etc.—Continued.

	Total to June 30, 1896.	During fiscal year 1897.	Total to June 30, 1897.
TOPOGRAPHY.			
Area surveyed, in square statute miles	38 238	379	38 617
Length of general coast, in statute miles	11 603	452	12 055
Length of shore line, in statute miles, including rivers, creeks, and ponds	99 917	546	100 463
Length of roads, in statute miles	51 049	452	51 501
Topographical parties, number of	.....	12	.....
HYDROGRAPHY.			
Parties, number of, in charge of naval officers	.....	12	.....
Parties, number of, in charge of civilian officers	.....	2	.....
Number of miles (geographical) run while sounding	516 615	11 317	527 932
Area sounded, in square geographical miles	161 955	1 029	162 984
Miles run, additional, of outside or deep-sea soundings	92 955	.....	92 955
Number of soundings	22 269 246	570 208	22 839 454
Deep-sea soundings	13 270	.....	13 270
Deep-sea temperature observations	17 955	.....	17 955
Current stations, number of, occupied by hydrographic parties	.....	27	.....
Deep-sea current stations, number of	.....	.....	.....
Deep-sea subcurrent observations, number of	.....	.....	.....
Deep-sea surface current observations, number of	.....	.....	.....
Specimens of bottom, number of	14 159	252	14 411
Automatic tide gauges established	111	2	113
Automatic tide gauges discontinued	105	1	106
Parties doing tidal work exclusively	.....	4	.....
Parties doing tidal work in connection with hydrographic work	.....	14	.....
Staff and box gauges established	2 430	61	2 491
Staff and box gauges discontinued	2 426	58	2 484
RECORDS.			
Tidal and current observations, originals, number of vols.	5 309	117	5 426
Tidal and current observations, duplicates, number of vols	3 565	103	3 668
Aggregate years of record for automatic tide gauges	326	12	338
Tidal stations for which reductions have been made	1 744	28	1 772
Aggregate years of record reduced	352	13	365
Triangulation, originals, number of volumes	6 985	117	7 102
Triangulation, originals, number of cahiers	32	13	45
Astronomical observations, originals, number of volumes	2 296	27	2 323
Astronomical observations, originals, number of cahiers	8	14	22
Magnetic observations, originals, number of volumes	707	.....	707
Magnetic observations, originals number of cahiers	170	79	249
Pendulum observations, originals, number of volumes	24	1	25
Duplicates of above, number of volumes	7 765	148	7 913
Duplicates of above, number of cahiers	162	110	272
Geodetic leveling observations, number of vols., originals	166	43	209

* Not including topographical reconnaissance and special examinations in Alaska.

Stasistics of field and office work of the Coast and Geodetic Survey, etc.—Continued.

	Total to June 30, 1896.	During fiscal year 1897.	Total to June 30, 1897.
RECORDS—continued.			
Geodetic leveling observations, number of vols., duplicates	135	22	157
Computations, number of volumes	4 400	15	4 415
Computations, number of cahiers	686	174	860
Hydrographic soundings and angles, originals, number of volumes	13 249	337	13 586
Hydrographic soundings and angles, duplicates, number of volumes	4 718	271	4 989
MAPS AND CHARTS.			
Topographic maps, originals	2 236	29	2 265
Hydrographic charts, originals	2 460	44	2 504
ENGRAVING.			
Engraved plates of charts	646	6	652
Engraved plates of preliminary charts and diagrams for the Coast and Geodetic Survey reports, and of maps of the District of Columbia	902	11	913
Engraved plates of Coast Pilot charts	80	.....	80
Engraved plates of Coast Pilot views	104	.....	104
Electrotype plates made	2 538	76	2 614
PRINTING.			
Sheets of charts and maps deposited with sale agents	533 345	24 538	557 883
Sheets of charts and maps sold at Coast and Geodetic Survey Office	.....	673	.....
Sheets of charts and maps distributed to Congress, Executive Departments, foreign Governments, libraries, etc	.....	31 977	.....
Sheets of charts and maps, total distribution	1 110 946	57 188	1 168 134

TABLE NO. 3—1897.

Information furnished to Departments of the Government in reply to special requests, and to individuals upon application, during the fiscal year ending June 30, 1897.

Date.	Name.	Data furnished.
1896.		
July 2	Prof. W. H. Pegram, Trinity College, Durham, N. C..	Remarks on the moon's signs and how to find them.
2	E. L. Corthell, C. E., New York, N. Y.....	Tracing of topographic sheet No. 1530, showing route of the proposed Cape Cod Ship Canal, scale 1–10 000.
3	Bureau of Ordnance, Navy Department, Washington, D. C.	Descriptions of two trigonometrical stations in the vicinity of Indian Head, Potomac River.
3	Prof. W. H. Pegram, Trinity College, Durham, N. C..	Latitude and longitude of Raleigh, N. C.
3	H.F. Gunnison, Brooklyn Daily Eagle, Brooklyn, N.Y.	Table of tidal differences for high water for 30 stations on Long Island, New York.
7	W. A. Dodsworth, Journal of Commerce and Commercial Bulletin, 19 Beaver street, New York.	Table of tidal differences for 80 stations on the Atlantic coast.
7	Otto Esser, Elka Park, Catskill, N. Y.....	Information as to how to obtain the latitude, longitude, and elevation of his meteorological station.
8	Capt. D. D. Gaillard, U. S. E., Washington, D. C	Descriptions of 4 bench marks in Portland Canal, Alaska, and British Columbia.
8	Capt. D. D. Gaillard, U. S. E., Washington, D. C	Tracings of triangulation sketches and topographic and hydrographic surveys of Portland Canal, Alaska.
9	Capt. D. D. Gaillard, U. S. E., Washington, D. C.....	Geographical positions of trigonometrical stations on Portland Canal, Alaska; latitude and longitude of astronomical stations, Lion Point and Port Simpson; length of base line on Salmon River flats; descriptions of stations of the surveys of 1888 and 1895.
10	W. J. Payne, Richmond, Va	Results of spirit leveling between Old Point Comfort and Richmond; with diagram and descriptions of bench marks.
10	C. A. Campbell & Co., Boston, Mass.....	Tracing of soundings south of Fairhaven Bridge, New Bedford, Mass., scale 1–2 500.
11	W. K. Mayo, Herndon, Va.....	Table of magnetic declinations for Washington between the years 1750 and 1900, and the present bearings of 6 lines run in 1840.
13	Stehman Forney, board for examination of improvements at the mouth of Brazos River, Texas, Washington, D. C.	Projection, tracing, and blue prints of Brazos River, Texas.
13	Lieut. A. C. Macomb, U. S. A., Fort McIntosh, Tex....	Blue print of the triangulation along the Rio Grande from Eagle Pass, Tex., to the Gulf of Mexico.
13	F. G. Osborn, Pennsylvania Railroad, 8 Broadway, New York.	Times of high and low waters at Fort Hamilton, New York Harbor, on February 10, 11, and 12, 1896.
14	Charles H. Davis, C. E., New York.....	Tracing of hydrography of Arthur Kill, from Newark Bay to Rahway River. Scale 1–5 000.
15	E. F. Dickins, San Francisco, Cal	Tracing of Los Angeles base line.
15	W. S. Harshman, Nautical Almanac Office, Washing-ing, D. C.	Advance proof of tidal differences, from tide tables for 1897, and explanations thereof.
15	J. De Bruyn Kops, Savannah, Ga.....	Description of the Stierle automatic tide gauge, as remodeled by the Coast and Geodetic Survey.
16	W. S. Bliss, Glenwood, Nev.....	Scheme for laying out a speed trial course on Lake Tahoe.
18	L. K. Rice, surveyor, Bell County, Ky	Information bearing on terrestrial magnetism.
18	E. F. Smith, C. E., Patchogue, N. Y.....	Descriptions of bench marks at Port Jefferson, N. Y.
18	Prof. Henry Meier, Milton Academy, Taneytown, Md.	Advance proof sheets of tide tables for 1897 for Baltimore, Md., and Old Point Comfort, Va.; also tidal differences for Richmond, Va.
20	R. U. Goode, U. S. Geological Survey, San Francisco, Cal.	Difference between the plane of mean lower low water and mean sea level at New York Landing, Suisun Bay, California.
21	P. J. Haltigan, Washington, D. C	Geographic positions of 52 cities in the United States and their differences of longitude from Washington, D. C.
21	Lieut. Col. J J. Rogers, Fort Schuyler, N. Y	Geographic positions and descriptions of stations at Sandy Hook, N. J. Topographic survey of 1885–86.

Information furnished to Departments of the Government in reply to special requests, etc.—Continued.

Date.	Name.	Data furnished.
1896.		
July 22	J. Stewart, C. E., War Department, Washington, D. C.	Present magnetic declination at Bridge Creek Landing, Potomac River, Virginia.
23	O. A. Veazey, C. E., Dego, W. Va	Results of magnetic observations made in West Virginia.
24	Lieut. A. C. Macomb, Fort McIntosh, Tex	Astronomic latitude and longitude of the station at Fort McIntosh, Tex.
25	A. P. Killinger, Cedar Springs, Va	Table of magnetic declinations between the years 1790 and 1900 for the region about Marion and Wytheville, Va., time of maximum east declination, time when agonic line passed over Marion, and present annual change.
22	Lieut. Col. John J. Rogers, Fort Schuyler, N. Y	Tracing of shore line, etc., of Sandy Hook and vicinity, for use in artillery practice.
23	E. L. Corthell, C. E., North Egremont, Mass	Latest soundings at the entrance to Brazos River, Texas.
27	W. S. Sampson, Chief of Bureau of Ordnance	Projection on scale of 1–20 000 of Indian Head proving grounds.
27	Evans Bros., C. E., Jamaica, Long Island	A list of 70 geographic positions, azimuths, and distances of stations in the vicinity of Jamaica Bay, Long Island, New York.
29	H. L. Whiting, State Survey of Massachusetts, Boston, Mass.	Geographical positions of trigonometrical points in Massachusetts.
29	Prof. J. B. Johnson, Washington University, St. Louis, Mo.	Pamphlets on position of Polaris between 1889 and 1905 and distribution of magnetic declination in Alaska in 1895.
30	O. A. Veazey, C. E., Dego, W. Va	Information concerning the annual change and the magnetic declination.
Aug. 3	Prof. George Davidson, C. E., San Francisco, Cal	Tracing from the Sausalito automatic tidal record, showing the earthquake waves of June 15, 1896.
4	F. W. Hodgdon, C. E., Boston, Mass	Two tracings from topographic sheets, showing the positions of stations "Brant" and "White."
6	Frederick N. Wales, secretary Land and Harbor Commission, Boston, Mass.	Tracing of topography and hydrography of Great Harbor River, Massachusetts.
6	Capt. O. M. Carter, U. S. E., Savannah, Ga	Mean heights of high and low waters at Charleston, S. C., for each month from 1883 to 1895.
7	G. C. Dean, Washington, D. C	Advance proofs of tidal differences for Chesapeake Bay for the year 1897.
10	Bogart & Sperry, New Haven, Conn	Photographic copies of original topographic sheet No. 1445, "Vicinity of New Haven, Conn."
10	S. H. Brockunier, C. E., Wheeling, W. Va	Geographic positions and descriptions of 9 trigonometric stations in West Virginia.
11	F. M. Trout, Bart, Pa	Pamphlets on the secular variation of the magnetic declination and its distribution, as shown by the isogonic lines.
12	F. M. Shields, Coopwood, Miss	Information concerning methods of observing the pole star in determining magnetic declination.
13	J. A. Ziegler Electric Company, Boston, Mass	Value of the acceleration of gravity at Boston and Cambridge, Mass.
14	Lieut. E. T. Wilson, U. S. E., St. Augustine, Fla	Tidal constants for 10 stations in the vicinity of St. Augustine, Fla.
15	Prof. J. B. Johnson, Washington University, St. Louis, Mo.	Advance copy of the isogonic chart of the United States for the epoch 1900.
17	Prof. O. C. Wendell, Harvard College Observatory, Cambridge, Mass.	Advance copy of tide tables for Boston, Mass., for the year 1897.
17	W. E. Lingard, San Francisco, Cal	Blue print of the survey of Porcupine River, Alaska, from its mouth to the one hundred and forty-first meridian.
19	W. L. Lancaster, Blacksburg College, Virginia	Magnetic chart of the United States and a table showing the changes of the magnetic declination in Virginia during the present century.
20	Prof. J. B. Johnson, Washington University, St. Louis, Mo.	Table of annual change of the magnetic declination at a number of prominent places in the United States.
25	F. R. Tibbetts, Boston, Mass	Descriptions of 2 trigonometric stations on Marthas Vineyard.
25	Evans Bros., C. E., Jamaica, Long Island, New York	Descriptions of 16 trigonometric stations about Jamaica Bay, Long Island.
25	Riggs & Bro., 221 Walnut street, Philadelphia, Pa	Tidal and current data for Brandywine Shoal Light and Fourteen Foot Bank Light, Delaware.
26	Commercial Printing House, Baltimore, Md	Information concerning tide tables for 1896.
26	R. U. Goode, U. S. Geological Survey, San Francisco, Cal.	Information concerning tidal reference planes at Tacoma, Wash.
27	E. Dimmick, Columbus, Ohio	Description of automatic tide gauges.
28	Japanese consul, San Francisco, Cal	Nigrosine print of record of tidal wave of June 15, 1896.
29	A. F. Rogers, San Francisco, Cal	Copy of record of the Sausalito tidal record for May 18, 1895.
31	Andros & Frank, attorneys, San Francisco, Cal	Tracing of tidal curve at Sausalito, Cal., for May 18, 1895, with information as to the condition of water on the bar.
4	Chief of Weather Bureau, Department of Agriculture, Washington, D. C.	Magnetic declination observed at Havre, Mont.

Information furnished to Departments of the Government in reply to special requests, etc.—Continued.

Date.	Name.	Data furnished.
1896 Sept. 1	M. Funakoshi, acting consul of Japan, San Francisco, Cal.	Tracing of the Sausalito automatic tidal record showing the earthquake waves of June 15, 1896.
2	W. G. Russell & Co., surveyors, Russell, Kans	Geographical positions of 9 trigonometrical stations in the vicinity of Russell, Kans.
4	L. A. Bauer, Linden, Md	Results of magnetic observations in Maryland; also descriptions of the stations.
5	J. F. Tracy, Mecklenburg, N. Y	Table of magnetic declination at Oxford and Ithaca from 1790 to 1900; present annual change and total change of declination since 1838.
5	H. L. Fairchild, Rochester, N. Y	Elevation of bench mark at Greenbush, opposite Albany, N. Y.
8	W. G. Scott, secretary of Passaic Valley Sewerage Commission, Newark, N. J.	Times and ranges of the tides of Kill van Kull, Newark Bay, and Passaic River, New Jersey.
18	W. B. Daniel, Ashland, Pa	Isogonic chart of Honduras for January, 1900, and annual change of magnetic declination in Honduras between the years 1890 and 1900.
18	James Watson, Los Angeles, Cal	Information concerning daily magnetic results for the period 1892–1896 and of record of sun spots for the same period.
21	U. S. Geological Survey, Washington, D. C	Elevations of bench marks in Arkansas and Missouri between Fort Smith and Lamar; also descriptions of the bench marks.
22	C. H. Van Orden, Catskill, N. Y	Descriptions and geographical positions of 7 trigonometrical stations on the Hudson River, New York.
24	L. F. Le Baron, Jacksonville, Fla	Geographical positions of the St. Johns Light and of 2 church spires in Jacksonville, Fla.; magnetic declination at Jacksonville in 1896, and annual change.
24	Maj. W. T. Rossell, U. S. E., Mobile, Ala	Descriptions of 4 bench marks in Alabama, Mississippi, and Louisiana.
24	Lieut. Commander E. K. Moore, U. S. N., San Francisco, Cal.	Information concerning tides and currents at Seymour Narrows, British Columbia.
25	Prof. W. H. Pegram, Trinity College, Durham, N. C.	Advance proofs of 1897 tide tables for Charleston, S. C., and constants for obtaining time of high water at Southport, N. C.
25	Maj. W. T. Rossell, U. S. E., Mobile, Ala	Appendix No. 9, report for 1887.
26	Hugo Bilgram, Philadelphia, Pa	Information concerning improvements on the Stierle self-registering tide gauge.
26	Lieut. Col. A. M. Damrell, U. S. E., Portland, Me	Blue prints of topography and hydrography of Chandler River, Maine, from original sheets Nos. 1536, topography, and 1648, hydrography.
29	J. F. Newson, Indiana University Geological Survey	Information concerning magnetics.
30	U. S. Marine-Hospital Service, Washington, D. C	Outline map of Ship Island, Mississippi, with sketch of United States quarantine buildings, scale 1–30 000.
Oct. 1	Brig. Gen. W. P. Craighill, Chief of Engineers, U. S. A	Photographic copy of original hydrographic sheets Nos. 2088, 2089.
1	Prof. W. H. Pegram, Trinity College, Durham, N. C.	Information in regard to tides at Southport, N. C.
2	J. H. Gray, Tampa, Fla	Magnetic declination at Tampa, Fla., and 2 pamphlets on terrestrial magnetism.
2	U. S. Marine-Hospital Service, Washington, D. C	Drawing of the coast of the United States in 4 sections; scale 1–5 000 000, prepared for photolithographing, showing quarantine and inspection stations.
5	S. P. Baird, Portsmouth, Ohio	Geographical position and descriptions of 5 trigonometrical stations in Greenup and Lewis counties, Ky.
6	C. E. Emory, New York, N. Y	Elevation of Somerville Station, New Jersey.
6	Maj. D. W. Lockwood, U. S. Engineers, Newport, R. I.	Hydrography of New Bedford Harbor above and below Fairhaven Bridge, enlarged to scale of 1–2 500.
8	E. E. West, Atlanta, Ga	Longitude of the Atlanta Astronomical Station.
8	U. S. Geological Survey, Washington, D. C	Descriptions of 4 bench marks at Beaufort, N. C.
9	A. M. Ford, Salem, N. J	A table of distances in the Delaware river and bay from Trenton to Cape May Light.
9	Charles W. Staniford, surveyor, New York, N. Y	Descriptions and geographical positions of 10 triangulation stations in the vicinity of New York.
14	C. V. Martin, Washington, D. C	Table of magnetic declinations for central Ohio and particularly for Zanesville, Ohio, between the years 1800 to 1900; also present annual change in declination.
14	Delaware Kemper, U. S. consul at Amoy, China	Six copies of tide tables for 1897.
14	R. U. Goode, U. S. Geological Survey, San Francisco, Cal.	Descriptions of 4 bench marks in California.
15	Charles W. Staniford, surveyor, New York, N. Y	Descriptions and geographical positions of 23 traiangulation stations in the vicinity of Throgs Neck, New York.
15	H. L. Whiting, Massachusetts Topographical Survey Commission, Boston, Mass.	Photographic copies of shore line of Marthas Vineyard, reduced to scale of 1–30 000 from original topographic sheet Nos. 202, 1702, 1802, 1845, 1846, and 1856; similar copies of shore line of Nantucket Island from sheets Nos. 1785, 1814, 1815, and 1818.

Information furnished to Departments of the Government in reply to special requests, etc.—Continued.

Date.	Name.	Data furnished.
1896		
Oct. 16	U. S. Geological Survey, Washington, D. C	Elevations of 4 bench marks at Little Rock, Ark.
17	Capt. Thos. L. Casey, Washington, D. C	Magnetic declination at Old Point Comfort, Va., for December 1, 1896, and present rate of annual change.
17	C. F. Adams, Detroit High School, Detroit, Mich	Information concerning terrestrial magnetism.
19	D. Scully, Austin, Tex	Sketch and geographical position of Battle Mountain.
19	R. U. Goode, U. S. Geological Survey, San Francisco, Cal.	Descriptions of 7 bench marks at Astoria, Oreg.
19	Charles Davison, secretary of British Association Seismographic Investigating Commission, Birmingham, England.	Blue-print copy of tidal curve from the Sausalito, Cal., automatic tide-gauge record.
21	Lieut. Col. W. H. H. Benyaurd, U. S. E., St. Augustine, Fla.	Descriptions and geographical positions of 53 trigonometrical stations on Tampa Bay, Florida.
22	Lieut. Col. W. H. H. Benyaurd, U. S. E., St. Augustine, Fla.	Descriptions of 2 bench marks at Tampa, Fla.
24	F. Bullfinch, Waldoboro, Me	Annual change of the magnetic declination during the last 15 years.
24	U. S. Geological Survey, Washington, D. C	Position and description of the astronomical station at Springfield, Ill.
24	Maj. C. J. Humphrey, U. S. A., Washington, D. C	Tracing of the west shore of Potomac River between Chain and Aqueduct bridges; scale 1–15 000.
27	A. M. Ford, Salem, N. J	Length of the nautical mile; distances from Cape May Light, New Jersey, to Delaware City, Del.
27	Lieut. Commander Jeff. E. Moser, U. S. N	A rule for obtaining the times of slack water in Seymour Narrows, British Columbia.
27	E. H. Francis, pilot of Pacific Coast Steamship Company, Victoria, British Columbia.	A rule for obtaining the times of slack water in Seymour Narrows, British Columbia.
28	Col. Peter C. Hains, U. S. E., Baltimore, Md	Tracing of hydrographic sheet No. 167 and hydrographic copy of hydrographic sheet No. 1842, both of Annapolis Harbor.
29	Captain George, pilot of Pacific Coast Steamship Company, Seattle, Wash.	A rule for obtaining the times of slack water in Seymour Narrows, British Columbia.
30	E. A. Semple, C. E., Hampton, Va	Information concerning the elevation of a bench mark at Old Point Comfort, Va.
30	Prof. A. Agassiz, Newport, R. I	Tracing of the harbor between Prices Neck and Cherry Neck, Rhode Island, from original hydrographic sheet No. 1790.
30	State Department, Washington, D. C	Blue print showing creeks tributary to Yukon River between White River and Birch Creek, and the location of placer gold mines.
Nov. 2	William E. Lingard, San Francisco, Cal	Photographic copies of original topographical sheets Nos. 2064 and 2065, Porcupine River, Alaska.
2	George Davidson, C. E., San Francisco, Cal	Longitude of Lafayette Park Astronomical Observatory, San Francisco, Cal.
2	U. S. Commissioner of Fish and Fisheries, Washington, D. C.	Tide tables for the years 1896 and 1897.
7	L. C. Fletcher, U. S. Geological Survey, Benicia, Cal	Descriptions of bench marks at Benicia, Cal.
7	Lieut. C. M. McCormick, U. S. N., U. S. Commission of Fish and Fisheries.	Explanation of tide tables relative to the times of slack water in Deception Pass, Washington.
7	H. V. Egbert, Akron, Ohio	Position of the geographic center of the United States and method of determining the same.
9	F. L. Tibbetts, Boston, Mass	Length and azimuth of the line from Deer Horn to Bird Island Light, Massachusetts.
9	Massachusetts State Survey Commission, Boston, Mass.	Duplicate prints of topographic sheets of Marthas Vineyard and Nantucket, Mass., 10 sheets in all and reduced to 1–30 000.
10	D. W. Schenck, Oak Tree, Va	Table of magnetic declinations observed at Williamsburg, Va.
11	Capt. F. V. Abbot, U. S. E., Charleston, S. C	Descriptions and geographical positions of 36 trigonometrical stations on Ashley River and in the vicinity of Charleston, S. C.; descriptions of 8 bench marks near Charleston, S. C.
13	Dr. J. W. Kalls, Franklinville, N. Y	Information concerning auroras and their connection with terrestrial magnetism.
13	G. Taz, Ellett, Va	Geographical position and elevation of Ashland, Va.
13	C. B. Tillingbeck, State Library of Massachusetts, Boston, Mass.	Tide tables for 1897.
14	Massachusetts State Survey Commission, Boston, Mass.	Photographic copies of shore line of Cuttyhunk, Nashawena, Pasque, and Naushon islands, reduced to scale of 1–30 000.
20	W. F. Williams, C. E., New Bedford, Mass	Blue prints of hydrography of New Bedford Harbor, Massachusetts, above and below Fairhaven Bridge, enlarged to scale of 1–2 500.
23	W. J. Thackston, Greenville, S. C	Geographical position, elevation, and magnetic declination of Paris Mountain, South Carolina.

Information furnished to Departments of the Government in reply to special requests, etc.—Continued.

Date.	Name.	Data furnished.
1896.		
Nov. 24	U. S. Geological Survey, Washington, D. C	Elevations of bench marks and points of the railroad between Sandy Hook, N. J., Kansas City, Mo., and Fort Smith, Ark.
24	H. L. Whiting, West Tisbury, Mass	Tracing and measurement of area of Stone Wall Pond, Marthas Vineyard, Massachusetts, from original topographic sheet No. 203.
24	Board for locating deep-water harbor in southern California.	Tracing of topographic sheet No. 1432[a], combined with hydrographic sheet No. 1340[a]; tracing of parts of hydrographic sheets Nos. 1341[a] and 1417; tracing of part of hydrographic sheet No. 1418, Newport Bay to San Pedro Bay, California.
28	W. L. Bell, Kansas City, Mo	Descriptions and geographical positions of 8 trigonometrical stations in the vicinity of Jackson County, Kans.
30	W. G. Yetter, Catawissa, Pa	Position of Polaris with respect to the meridian at a given time, and elapsed time since two stars were observed to be on the same vertical.
Dec. 2	M. Fargusson, Southport, N. C	Descriptions of 3 bench marks at Southport, S. C., together with computed times of high water for certain dates at the same place.
3	C. W. Drake, Greensboro, Pa	Information concerning magnetic declination and its changes.
3	J. F. LeBaron, Jacksonville, Fla	Descriptions and geographical positions of 13 triangulation stations between Fernandina and Cedar Keys, Fla.
4	D. W. Eaton, county surveyor, Versailles, Mo	Geographical positions of 4 trigonometrical stations in the vicinity of Versailles, Mo.; also magnetic data.
4	Bogart & Sperry, New Haven, Conn	Descriptions of 2 bench marks at New Haven Harbor entrance.
5	W. F. Williams, C. E., New Bedford, Mass	Photographic copies of hydrographic sheet No. 2250 and that part of sheet No. 2230 between Fairhaven and Coggeshall Bridge.
5	Board for locating a deep-water harbor in southern California.	Six blue prints each of original topographic sheets Nos. 1345, 1369, 1392, 1432[a], and 2125, and parts of hydrographic sheets Nos. 1340[a], 1341[a], 1417, and 1418.
5	Brazos River Commission, Washington, D. C	Three blue prints of original hydrographic sheet No. 2102.
8	Keuffel & Esser, New York, N. Y	Blue prints of isogonic chart and chart of annual changes of magnetic declination for the epoch 1900.
9	W. L. Bell & Co., Kansas City, Mo	Descriptions and geographical positions of 21 trigonometrical stations near the Kansas and Missouri boundary line.
9	W. C. Hood, Lawrence, Kans	Elevations of 2 bench marks near Lecompton, Kans.
9	W. A. Dodsworth, New York, N. Y	Differences in times of high water at Sandy Hook and at 80 other stations along the Atlantic Coast.
10	R. L. Sackett, Earlham College, Richmond, Ind	Information concerning magnetic declination and remarks about self-registering instruments.
12	Dr. N. L. Bates, U. S. N., Washington, D. C	Remarks about the marking of the telegraphic longitude station in the grounds of the Old Naval Observatory, Washington, D. C.
14	J. F. Hayford, Ithaca, N. Y	Table of personal equation values, between Assistants C. H. Sinclair and G. R. Putnam, between the years 1890 and 1896.
14	E. F. Mussen, C. E., Norwich, N. Y	Magnetic information and blue prints of the declination for 1900.
16	M. V. B. Perley, Ipswich, Mass	Explanation of formula for sunrise.
22	U. S. Post-Office Department, Washington, D. C	Geographical positions of the extreme northern, eastern, southern, and western land points of the United States, and the distances between these positions.
23	F. F. Hills, Egg Island light keeper, Bivalve, N. J	The difference in time between high and low water at Egg Island and Philadelphia.
24	Irving Williamson, Washington, D. C	Time and height of the highest stage of the water at the Washington, D. C., Navy-Yard during the hurricane of September 29 and 30, 1896.
24	W. Q. Baxter, Yard, Pa	Elevation of the trigonometrical station "Yard."
24	C. W. Drake, C. E., Greensboro, Pa	Information concerning magnetic dips and intensities; blue prints of isogonic chart and chart of annual changes of magnetic declination for the epoch 1900.
26	W. G. Wheeler, Littleton, N. H	Blue prints of isogonic chart and the chart of annual changes of magnetic declination for the epoch 1900.
26	Lieut. D. Delehanty, U. S. N., New York, N. Y	Shore line of Hudson River at Poughkeepsie and vicinity, from the topographic survey of 1895.
26	Col. G. L. Gillespie, U. S. E., New York, N. Y	Photographic copy of topographic sheet No. 810, from Mount St. Vincent to and including Yonkers; soundings over the same limits, from hydrographic sheet No. 475, were also furnished and plotted on the photograph.
31	G. A. Hoadly, Swarthmore, Pa	Blue prints of magnetic declinations in the United States for the epoch 1900; also annual change of declination and pamphlet giving the distribution of dip and magnetic intensity for 1885.
31	A. D. Blackinston, C. E., Dunmore, Pa	Descriptions of 2 bench marks at Jersey City, N. J.

Information furnished to Departments of the Government in reply to special requests, etc.—Continued.

Date.	Name.	Data furnished.
1896.		
Dec. 31	Williams, Brown & Earle, Philadelphia, Pa	Blue prints of isogonic chart and the chart of annual change in magnetic declination for the epoch 1900.
31	Civil Service Commission, Washington, D. C	Samples of standard lettering and topographic symbols.
1897.		
Jan. 2	W. Boecklin, Pittsburg, Pa	Magnetic declination at Belize, British Honduras, for the years 1839, 1850, 1885, and 1897.
2	C. E. Cranch, Philadelphia, Pa	Descriptions and geographical positions of 4 trigonometric stations in the vicinity of Philadelphia, Pa.
2	U. S. War Department, Washington, D. C	Blue prints of the triangulation along the Rio Grande.
5	M. E. Ragsdale, Brownwood, Tex	Magnetic declination in Coleman County, Tex., and annual change of declination; also pamphlets on terrestrial magnetism.
6	W. F. Truesdale, Jasper, Pike County, Ohio	General information on the subject of terrestrial magnetism.
7	W. D. Bell & Co., Kansas City, Mo	Descriptions and geographical positions of 2 trigonometric stations near Wyandotte County, Kans.
7	L. G. Hare, surveyor, Salinas, Cal	Magnetic information.
8	S. Dean, Glenwood, Iowa	Blue prints showing distribution of magnetic declination in January, 1890, and its annual change.
8	Hon. Donaldson Caffery, U. S. Senator, Louisiana	Duplicate copies of the base map of the United States, scale 1–5 000 000, with shore-line distances, sailing lines, etc., between prominent points.
9	Edward Roberts, Nautical Almanac Office, London, England.	Copy of tide tables for 1897.
9	E. C. Jordan, C. E., Portland, Me	Explanation of correction to tidal values for the longitude of the moon's node.
11	Lieut. Commander D. Delehanty, U. S. N., New York, N. Y.	Additional names for blue print of the Hudson River, vicinity of Poughkeepsie, N. Y.
12	L. Wagoner, San Francisco, Cal	Geographical positions of station "Needles" and 3 trigonometrical stations in the vicinity nearer to latitude 35° 15′; also descriptions of these stations.
12	U. S. Geological Survey, Washington, D. C	Elevation of "Gristmill" bench mark at Greenbush, N. Y.
15	U. S. War Department, Washington, D. C	Geographical position of Brownsville, Tex.
15	U. S. Geological Survey, Washington, D. C	Descriptions of 2 bench marks in California.
16	George R. Pearse, Portland, Oreg	Information concerning tides along the Columbia River.
18	F. N. Chase, Hartford, Conn	Present magnetic declination at Springfield, Mass., and its annual increase; also pamphlets on terrestrial magnetism.
18	Hon. I. F. Fischer, M. C., New York, N. Y	Blue print of tracing of Romer Shoal, Lower New York Bay, showing 6, 12, and 18 foot curves and areas within the same, from survey of 1885.
19	Geo. Risk, Civil Service Commission, Washington, D.C.	Transfers from copper plate of chart of James River, Virginia.
19	W. G. Yetter, Catawissa, Pa	Formula and tabular values of the magnetic declination at Catawissa, Pa
19	J. Friel, Victoria, Ky	Blue prints of isogonic curves for 1900 and of annual change of declination.
19	P. Golay, Assistant U. S. Engineer, Morgantown, W. Va.	Elevations by spirit leveling between St. Louis and Jefferson City, Mo.
19	U. S. Geological Survey, Washington, D. C	Description of 3 bench marks on Karquines Strait, California.
19	Hon. Israel F. Fischer, M. C., New York, N. Y	Estimated ranges of tide at Romer Light, New York.
19	Hon. Horace Chilton, U. S. Senator from Texas, Washington, D. C.	Blue prints of isogonic chart and chart of annual change of declination.
20	Scofield & Starr, engineers and surveyors, Bridgeport, Conn.	Length and direction of line from South Congregational Church at Bridgeport, Conn., to harbor light house.
20	J. S. Mohler, Salina, Kans	Elevation of 3 bench marks at Salina, Kans., above mean level of the Gulf of Mexico.
21	U. S. Geological Survey, Washington, D. C	Description of 7 bench marks at Astoria, Oreg.
22	Light-House Board, Washington, D. C	Magnetic declination at Portsmouth, N. H., in 1791.
23	J. E. Lawrence, C. E., Greenville, S. C	Geographical position and elevation above sea level of station at Paris, S. C.
23	W. S. Aldrich, West Virginia University, Morgantown, W. Va.	Magnetic information.
23	Randall Hagner, Attorney-at-law, Washington, D. C	Information as to the recorded heights of water at the Washington, D. C., Navy-Yard during the hurricane of September 29 and 30, 1896.
23	Edward O'Neill, Philadelphia, Pa	Time of high water at Hog Island, coast of Virginia.
26	Passaic Valley Sewerage Commission, Newark, N. J.	Information concerning the tides at Passaic, N. J.
28	Fred. E. Ruediger, Chincoteague Island, Virginia	Tracing of topography from original sheets Nos. 723 and 763.
28	Hon. I. F. Fischer, M. C., New York	Profile of Romer Shoal, Lower New York Bay.
29	H. T. Greenleaf, C. E., Elizabeth City, N. C	Tracing of shore line of Alligator River, North Carolina.

Information furnished to Departments of the Government in reply to special requests, etc.—Continued.

Date.	Name.	Data furnished.
1897.		
Jan. 29	W. Beckwith, Lake Geneva, Wis	Magnetic information and blue prints of charts of magnetic declination and annual change for epoch 1900.
29	U. S. Weather Bureau, Washington, D. C	Description of the bench mark on the U. S. custom-house at Charleston, S. C.
29	Maj. C. W. Raymond, U. S. E., Philadelphia, Pa	Description of 2 bench marks at Edgemoor, Del.
30	R. L. Blakeman, C. E., Barbourville, Ky	Information concerning the magnetic declination in eastern Kentucky between the years 1798 and 1897.
30	Warren Beckwith, Lake Geneva, Wis	Two hydrographic projections.
30	U. S. Marine-Hospital Service, Washington, D. C	Tracing of drawing of fumigating engine.
Feb. 1	R. A. Hilher, Salina, Kans	Elevation above sea level of 3 bench marks at Salina, Kans.
1	R. U. Goode, U. S. Geological Survey, Washington, D. C.	Reading of mean low water at Sausalito, Cal.
3	M. Blakenan, Bourbon County, Ky	Blue prints of isogonic and annual-change charts.
3	Hon. I. F. Fischer, M. C., New York	Two additional blue prints of profile of Romer Shoal, Lower New York Bay; also blue prints of sketch of proposed fortifications on Romer Shoal.
3	W. A. Post, C. E., Newport News Shipbuilding and Dry Dock Co., Newport News, Va.	Information concerning currents off Old Point Comfort Light and Thimble Light, Virginia.
3	James H. Nixon, Ironton, Ohio	Descriptions and geographical positions of 3 trigonometrical points in the vicinity of Ironton, Ohio.
5	George A. Stockwell, Providence, R. I	Tidal information.
5	Urner, Keedy & Urner, Frederick, Md	Table of magnetic declinations and annual change between the years 1753 and 1897 at a point in Howard County, Md.; also miscellaneous magnetic information and copy of isogonic chart for the epoch 1900.
5	G. H. Taylor, C. E., Boston, Mass	Descriptions and geographical positions of 6 trigonometrical stations on Long Island, New York.
5	The National Contracting Co., New York, N. Y	Photographic copy of the hydrography between Brooklyn Bridge and Governors Island, New York.
6	Hon. G. L. Wellington, M. C., Baltimore, Md	Copies (photographic) of isogonic and annual-change charts.
6	E. D. Osborn, Spring City, Tenn	Copies of chart of annual change of magnetic declination.
6	John L. Gans, Gans, Pa	Latitude of 3 stations on Mason and Dixon's line; copies of isogonic curves for 1900; information concerning position of Polaris.
9	North River Bridge Co., New York, N. Y	Descriptions and geographical positions of trigonometrical stations in the vicinity of the proposed bridge.
11	Brazos River Commission, Washington, D. C	Tracing showing comparison of curves of depth at the mouth of Brazos River, Texas, from surveys of 1887, 1891, and 1897.
11	U. S. Geological Survey, Washington, D. C	Astronomical position of Little Rock, Ark., Fort Smith, Ark., and longitude of St. Louis, Mo.
11	D. J. Howell, C. E., Alexandria, Va	Information concerning the survey of the boundary lines of the District of Columbia.
12	E. L. Corthell, C. E., New York, N. Y	Photographic copy of part of the hydrography of Buzzards Bay, Massachusetts.
12	William B. Clark, Baltimore, Md	List of tidal stations in Maryland at which good bench marks exist.
13	Hon. I. F. Fischer, M. C., New York, N. Y	Five blue prints of tracing of Romer Shoal, Lower New York Bay.
13	Brazos River Commission, Washington, D. C	Five blue print copies of hydrographic survey of 1897 of the mouth of Brazos River, Texas; 4 blue prints of cross sections in Brazos River jetties.
15	John C. Trautwine, jr., secretary Association of Engineering Societies, Philadelphia, Pa.	Duplicate transfers from lower half of plate Delta of the Mississippi River.
15	W. S. Dalrymple, New York, N. Y	Description and geographical position of a station in New York City.
16	D. P. Trumbull, North Cambridge, Mass	Information concerning maps of Venezuela.
16	W. G. Yetter, C. E., Catawissa, Pa	Advice concerning the laying out of a meridian line.
17	M. Rynacheff, director of the Physical and Central Observatory, St. Petersburg, Russia.	Magnetic information; 6 charts showing the distribution of terrestrial magnetism within the limits of the United States for the epoch January, 1900, and a pamphlet on the secular variation of the magnetic force.
17	J. P. Lyon, C. E., Erie Railroad, New York, N. Y	Statement of the highest and lowest tides observed at Governors Island, New York Harbor.
19	Brazos River Commission, Washington, D. C	Four blue prints of Brazos River entrance, from survey of 1897; 2 blue prints of cross sections of jetties; 4 blue prints of comparison of contours.
19	H. Brooks, Bainbridge, Ga	Change of the magnetic declination between the years 1888, 1893, and 1900; copy of isogonic curves for 1900.
20	H. Bissell, chief engineer Boston and Maine Railroad, Boston, Mass.	Blue-print copy of chart of Boston inner harbor, scale 1–10 000.

Information furnished to Departments of the Government in reply to special requests, etc.—Continued.

Date.	Name.	Data furnished.
1897.		
Feb. 20	J. T. R. R. Carroll, surveyor, Howard County, Md....	Magnetic declination in Howard County, Md., in 1753, and change between that year and 1897.
23	U. S. Light-House Board, Washington, D. C.....	Photographic copies of original hydrographic sheets Nos. 53, 62, 526, 1506, and 1662, vicinity of Coney Island, New York; also comparative tracing showing curves of depth for the same locality at different dates.
23	Board for locating a deep-water harbor in southern California.	Tracing of harbor of Santa Monica, Cal., showing comparison of curves of depths from surveys of 1893 and 1897; blue-print copy of topographic sheet No. 2125 showing proposed location of breakwater; also 8 blue prints of recent hydrography of Santa Monica Harbor.
23	Prof. J. P. C. Southall, Crozet, Albemarle County, Va.	Isogonic, isoclinic, and isodynamic curves for the United States for 1900; information concerning the secular variation of magnetic force and its distribution in 1900.
23	E. W. Goerke, C. E., Columbia, Pa.....	Blue print of isogonic chart for 1900; also of chart of annual change of magnetic declination; various pamphlets.
24	Prof. O. C. Harrington, Chicago, Ill.....	Height of Mount St. Elias and Mount Logan, Alaska.
25	F. L. Tibbetts, Boston, Mass.....	Descriptions of 8 trigonometrical stations on Cape Cod, Massachusetts.
25	J. E. Purcell, Purcepolis, N. C.....	Magnetic information and charts showing magnetic declination and annual change at Purcepolis between 1792 and the present time.
26	E. L. Corthell, C. E., New York, N. Y.....	Three blue prints of 1897 survey of Brazos River entrance, Texas; three prints of comparative contours, same region; three prints of cross sections of Brazos River jetties.
27	Capt. L. W. V. Kennon, U. S. A., Washington, D. C...	Sketch showing the progress of triangulation by the Coast and Geodetic Survey, the Lake Survey, and the Corps of Engineers U. S. A.
27	Maj. H. Giddings, Hartford, Conn	Length and condition of line between Sandford and West Hills, Conn.
27	A. D. Mills, Montgomery, Ala.....	Position, height, and description of station "Wilder," Ala.
27	W. Bell Dawson, in charge of Canadian tidal survey, Ottawa, Canada.	Statement concerning expenditures for tidal work in 1896.
Mar. 1	U. S. Geological Survey, Washington, D. C.....	Estimate of the probable error of the comparison between the tide staves at Oakland and Sausalito, Cal.
2	M. Rollet De L'Isle, Hydrographe de la marine, Paris, France.	Tidal information.
2	Lieut. A. J. Perito Basto, of Portuguese navy, Lisbon, Portugal.	Tidal information.
2	Lieut. M. M. Macomb, U. S. A , Fort Riley, Kans.....	Positions of 7 geodetic stations in the vicinity of Fort Riley Military Reservation; elevation above sea level of a bench mark at Junction City.
3	Col. A. C. Pennington, U. S. A., Fort Adams, R. I.....	Geographical position and descriptions of trigonometrical stations in the vicinity of Fort Adams, R. I.
4	Hydrograpic Office, Navy Department, Washington, D. C.	Tidal constants for Tamp' o, Mexico.
6	C. H. VanOrden, Catskill, N. Y.....	Geodetic data and descriptions of 2 trigonometrical stations on the Hudson River, New York.
6	O. C. Farrington, Chicago, Ill.....	Geographical position and height of Mount Logan, British North America.
9	W. Beckwith, Lake Geneva, Wisconsin.....	Reference to information concerning the magnetic needle in the hands of Columbus.
9	J. F. Shellen, Washington, D. C.....	Opinion as to the value of his "radiimeter."
9	Hon. C. K. Davis, Foreign Relations Committee, U. S. Senate, Washington, D. C.	Sketch showing the position of Mount St. Elias relative to the one hundred and forty-first meridian and the 10 marine league line.
9	A. M. Ford, Salem, N. J.....	Heights of certain high waters at Fort Hamilton, N. Y., Reedy Island, Delaware, and Port Royal, S. C.
10	Edmund Jones, Cold Spring Harbor, N. Y.....	Results from his magnetic observations of 1896.
12	Aspinwall and Lincoln, C. E., Boston, Mass..... ...	Tracing of Toby Island, Buzzards Bay, Massachusetts, from original topographic sheet No. 2227.
12	Richard P. Morgan, Board for locating a deep-water harbor in southern California.	Tracings and blue prints of map of southern California by U. S. engineers in 1891.
12	J. T. and J. B. Postlethwaite, C. E., Paducah, Ky.....	Position and description of the astronomical station at Paducah, Ky.
12	U. S. Geological Survey, Washington, D. C.....	Comparative statement of tidal planes at Fort Point and Sausalito, Cal.
12	Mendes Cohen, sewerage commission, Baltimore, Md.	Current table for Patapsco River Entrance, Maryland.
13	William Hood, chief engineer Southern Pacific Railroad, Oakland, Cal.	Descriptions of 2 bench marks at San Pedro, Cal.
13	J. F. Hall, editor of Daily Union, Atlantic City, N. J...	Explanation of tide tables; times of high water at Atlantic City, N. J., for March, 1897.
13	Prof. M. Merriman, So. Bethlehem, Pa	Prints of isogonic chart for 1900 and chart of change of magnetic declination 1895 to 1900.

Information furnished to Departments of the Government in reply to special requests, etc.—Continued.

Date.	Name.	Data furnished.
1897 Mar. 15	Board for locating a deep-water harbor in southern California.	Tracings of the 1897 surveys of Santa Monica and San Pedro harbors, California.
15	J. O. Campbell, Montgomery, Ala	Description and elevation of a station near Collirene, Ala.
17	H. Le Roy Potter, New Haven, Conn	Descriptions of 2 bench marks on Money Island, Connecticut.
17	Hon. S. B. Elkins, U. S. Senator, W. Va	Statement of extent of the coast line of the United States, including Alaska.
19	Division of Military Information, War Department, Washington, D. C.	Specimens of standard topographic symbols used by the Coast and Geodetic Survey.
19	W. B. Wilson, New Bedford, Mass	Photographic copy of hydrography between Fairhaven and Coggeshall bridges, New Bedford, Mass.
20	Dr. L. A. Bauer, Cincinnati, Ohio	A list of magnetic declinations as observed and as reduced to the epoch 1900, at 83 stations in the State of Maryland and adjacent borders of neighboring States; similar list of 60 stations where dip and intensity were observed; prints of the isogonic and annual change charts.
20	Prof. William Bullock Clark, Baltimore, Md	List of all the tidal stations of the Coast and Geodetic Survey in the State of Maryland.
24	Prof. W. B. Clark, director Maryland Geological Survey, Baltimore, Md.	Scheme of the Coast and Geodetic Survey triangulation within the State of Maryland; scheme showing charts of the Coast and Geodetic Survey within the State; also list of topographic and hydrographic sheets of Maryland and area of hydrography.
25	D. M. Picton, Rockport, Tex	Tracing of topography of Aransas Pass and vicinity, Texas.
25	H. E. Halfpenny, Boston, Mass	Height of trigonometric station "Leggs Hill," Massachusetts.
25	W. A. Brewer, surveyor, Keesville, N. Y	Magnetic information.
25	L. Wilson, Haverstraw, N. Y	Length of a minute of the parallels 41° and 42°, and of a minute of the meridian for the same latitude; also, length of a statute mile in metres.
27	Charles H. Hasswell, New York, N. Y	Longitude of St. Louis and description of the astronomical station at that place.
27	J. C. Ralston, New York, N. Y	Information concerning gravity measures, with references to Johnson's and Doolittle's publications for methods of observing azimuths.
29	J. C. Henkenins, San Francisco, Cal	Elevations of trigonometrical stations "Rocky Mound" and "Contra Costa."
29	G. M. Donham, Portland, Me	Advance copies of tides for 1898 for Eastport and Portland, Me.
30	Daniel O'Hare, U. S. General Land Office, Washington, D. C.	Copies of sketches showing the survey of the oblique boundary between California and Nevada; geographical positions of the principal triangulation points.
Apr. 3	W. H. Edinger, Stroudsburg, Pa	Magnetic information.
5	A. L. Moss, Sandusky, Ohio	Charts showing magnetic declination in the United States in 1885 and 1900, and annual change during 1890 to 1900.
5	A. R. Sweet, Pawtucket, R. I	Magnetic information.
5	F. W. Hodgon, Boston, Mass	References to Coast Survey publications.
6	John S. Irby, Richmond, Va	Explanations of tide tables for 1897.
7	G. S. Dunn, Newark, N. J	Information concerning tides in the Hudson River.
14	Prof. W. B. Clark, Baltimore, Md	Extension of primary triangulation over the State of Delaware and over Delaware Bay into Virginia; names of primary stations; location of astronomical stations in Maryland; scheme of published charts of Delaware Bay and the New Jersey coast.
16	W. D. Chesterman, Richmond, Va	Magnetic information.
16	Maj. S. S. Leach, U. S. E., New London, Conn	Description of the bench mark on Little Gull Island, New York.
17	U. S. Geological Survey, Washington, D. C	Geographical position of Springfield, Ill.
17	F. P. Chaffee, Weather Bureau, Washington, D. C	Latitude and longitude of 3 stations in Alabama; elevations of bench marks between Mobile and Okolona.
20	John A. Rudd, Washington, D. C	The highest and lowest tides observed at New York.
22	Jos. O. Webb, Oaks, N. C	Magnetic information and directions for use.
22	Col. A. C. M. Pennington, U. S. A., Fort Adams, R. I	Certain appendices, with suggestions respecting triangulation in the vicinity of Fort Adams, in connection with gun practice.
23	James M. Robertson, Cambridge, Md	Magnetic information.
23	Dr. Frank Waldo, Princeton, N. J	Magnetic declination at a place in southwestern North Carolina for a number of years between 1850 and 1900.
24	Harbor Commissioners, Tacoma, Wash	Geographical positions of 81 stations in the vicinity of Tacoma, Wash.
26	A. S. Parsons, Cambridgeport, Mass	Tidal information.
27	U. S. Geological Survey, Washington, D. C	Descriptions and geographical positions of 33 stations on the south coast of Long Island, New York.
27	J. S. Tyler, Blossburg, Mont	Information concerning magnetic declination.

Information furnished to Departments of the Government in reply to special requests, etc.—Continued.

Date.	Name.	Data furnished.
1897 Apr. 28	Hon. C. K. Davis, U. S. Senator, Washington, D. C.	Copy of Alaskan Boundary sheet No. 12, to accompany report of the International Boundary Commission.
29	R. D. Hall, Cartwright, Pa.	Table of positions of Polaris and of Alioth.
29	H. B. Wood, chief engineer topographical survey of Massachusetts, Boston, Mass.	Descriptions of 3 trigonometrical stations in the vicinity of Provincetown, Cape Cod, Massachusetts.
29	Thos. D. Mosscrop, Brooklyn, N. Y	Tracing of topography of Jamaica Bay, New York.
29	U. S. Navy Department, Washington, D. C.	Thirteen blue prints of the topography and hydrography of Ricks Passage and Sinclair Inlet, Puget Sound, Washington.
May 1	U. S. Geological Survey, Washington, D. C.	Descriptions of bench marks at San Pedro and Santa Monica, Cal.
1	John S. Irby, Richmond, Va	Explanation of tide tables.
3	C. Wyeth, New York, N. Y	Descriptions and geographical positions of 57 trigonometrical stations in the vicinity of Jamaica Bay, New York.
3	Prof. S. N. Williams, Cornell College, Mt. Vernon, Iowa.	Magnetic information and isogonic and annual change charts; positions of Polaris between 1889 and 1910.
3	W. E. Downes, Bennington, N. H.	Magnetic information and copies of isogonic and annual change charts; positions of Polaris between 1889 and 1910.
4	U. S. Geological Survey, Washington, D. C.	Geographical positions of 6 mountains in Washington.
5	U. S. Geological Survey, Washington, D. C.	Copy of triangle "Zeda"–"Short"–"Walker" of the Tennessee triangulation.
8	U. S. Geological Survey, Washington, D. C.	Geographical positions of Berryville and Winchester, Va.
8	Kiggins & Tooker, New York, N. Y	Tidal information for the Pacific Coast.
8	G. M. Atkinson, Tilden, Tex	Magnetic information and copies of isogonic and annual change charts for the epoch 1900.
10	U. S. Geological Survey, Washington, D. C.	Description of the bench mark at the Washington, D. C., Navy-Yard.
10	D. S. Dubs, Marburg, Pa.	Present bearing of an old line; magnetic pamphlets
10	C. E. Nager, Ryland, Va.	Magnetic information.
10	J. W. Thompson, Cambridge, Md.	Magnetic information.
11	H. S. Haynes, surveyor-general, Burlington, N. J	Isogonic and isodynamic charts for 1900.
13	Col. A. C. M. Pennington, U. S. A., Fort Adams, R. I.	Plotting of triangulation points on chart No. 353.
15	Phil. Markley, Wooster, Ohio.	Magnetic information and isogonic chart for 1900.
15	G. G. Cole, Holmesville, Ohio	Magnetic information and isogonic chart for 1900.
17	N. T. Brown, C. E., Lincoln, Va	Magnetic information and isogonic chart for 1900.
17	Commander S. W. Very, U. S. N., Boston, Mass.	Geographical positions, distances, and azimuths of 4 triangulation stations on the coast of Maine.
18	Commander J. E. Craig, U. S. N., Hydrographic Office, Navy Department, Washington, D. C.	Copy of tidal curve from the Sausalito, Cal., record, showing the earthquake wave of June 15, 1896.
19	W. F. Williams, city engineer, New Bedford, Mass.	Tracing of the hydrography of Acushnet River and New Bedford Harbor, Massachusetts, from the survey of 1895 and 1896.
19	Seth Dean, Glenwood, Iowa	Table of observed and computed magnetic declinations at Glenwood, between 1851 and 1897; also copies of isogonic chart and chart of annual change of declination for 1900.
20	Hon. James L. Slayden, M. C., San Antonio, Tex.	Magnetic information and isogonic and annual change charts for 1900.
20	Hon. Th. H. Ball, M. C., Washington, D. C.	Magnetic information and isogonic and annual change charts for 1900.
20	W. B. Howe, C. E., Concord, N. H.	Declination charts for 1900 and reference to a historical account of terrestrial magnetism.
20	E. K. Taylor, Alameda, Cal.	Explanations of tidal phenomena.
21	B. E. Valentine, New York, N. Y.	Blue-print copy of the topography of the eastern part of Jamaica Bay, New York.
21	F. Cope Whitehouse, Newport, R. I.	Tracing and blue print of the hydrography south of Newport, R. I., from Brentono Point to Spouting Rock.
24	J. H. Young, Philadelphia, Pa.	Elevation of bench mark at Camden Court-house, N. J.
25	W. G. Yetter, Catawissa, Pa.	Table of magnetic declinations at Catawissa, Pa., 1770 to 1905.
26	R. V. Woods, Blain, Perry County, Pa.	Magnetic information and charts for 1900.
26	Joseph Young, Philadelphia, Pa.	Descriptions of bench marks at Camden and Gloucester, N. J.
28	A. von Haake, Post-Office Department, Washington, D. C.	Descriptions of 5 astronomical stations in West Virginia and Kentucky.
28	C. A. McKinney, U. S. Engineer's Office, Washington, D. C	Elevations of 2 bench marks in the District of Columbia.
29	W. L. Kinzie, surveyor, Newport, Va.	Magnetic information.
29	J. F. Le Baron, Jacksonville, Fla.	Geographical positions on the St. Johns River, Fla., as far south as Hibernia.
June 1	Thos. N. Johnson, Pittsburg, Pa.	Elevations above sea level of 4 points in Indianapolis, Ind.
1	A. B. Chandler, Bowling Green, Va	Change of magnetic bearing of a line in Caroline County, Va., between the years 1803 and 1893.

Information furnished to Departments of the Government in reply to special requests, etc.—Continued.

Date.	Name.	Data furnished.
1897 June 1	C. H. A. Whiteford, Delta, Pa	Information concerning geographical positions, magnetic declinations, length of the nautical mile, and length of a degree of the meridian and parallel.
2	U. S. Geological Survey, Washington, D. C	Twelve geographical positions in New Hampshire, Kentucky, and Ohio.
2	Prof. J. C. Branner, Leland Stanford University, California.	Elevations of 25 bench marks on the line between Van Buren, Ark., and Seligman, Mo.; descriptions of the same; elevations of 16 railroad stations on the same line.
2	A. L. McDonald, San Francisco, Cal	Blue print of tidal curve from the Sausalito record, showing the earthquake wave of June 15, 1896.
2	J. N. Muller, New York, N. Y	Times of high water at Fort Hamilton and Bath Beach, N. Y., and Sandy Hook, N. J.
3	W. D. Pence, University of Illinois	Description and elevation of the bench mark at Odin, Ill.
3	U. S. Geological Survey, Washington, D. C	Three azimuths at stations "Zeda Mound," "Walker," and "Short Mountain," Tennessee; geographical positions of Lone Mountain and Montezuma, Nev.
8	U. S. Weather Bureau, Washington, D. C	Description of a bench mark at Tacoma, Wash.
11	S. B. Strong, Setauket, N. Y	Tracings of the topography from West Setauket to Stony Brook, Long Island, New York, from surveys of 1837 and 1886.
11	U. S. Geological Survey, Washington, D. C	Elevations of 6 stations in New Hampshire and Ohio.
12	Charles Wyeth, surveyor of oyster lands, State of New York.	Plotting of triangulation points on compiled map of western part of Jamaica Bay and of Sheepshead Bay, New York.
12	U. S. Geological Survey, Washington, D. C	Geographical position of station "Short," Tennessee.
14	U. S. Geological Survey, Washington, D. C	Description of station "Lone Mountain," Nevada.
15	W. Y. Smith, U. S. Engineer's Office, Wilmington, Del.	Distance between two specified points on Chesapeake Bay.
15	Prof. R. L. Sackett, Earlham College, Richmond, Ind.	Annual change of the magnetic declination at Richmond, Ind.
15	Commander S. W. Very, U. S. N., Boston, Mass	Verification of 3 distance computations for speed trial lines off Mount Desert, Me.
16	Lieut. Col. Wm. Ludlow, U. S. E., New York, N. Y	Projection of Lower New York Bay—scale 1–20 000, with triangulation points and shore line.
18	U. S. Geological Survey, Washington, D. C	Descriptions and geographical positions of 2 trigonometrical stations in the White Mountain region of Nevada.
18	W. C. Glenn, Eufaula, Ala	Astronomic latitude and longitude of the station of 1860 at Eufaula, Ala.; result of magnetic observations of 1896 at same place.
18	C. Jess Young, Philadelphia, Pa	Height of the highest observed stages of the Delaware River at Philadelphia, and the Potomac River at Washington.
19	Theo. G. Hoech, German legation, Washington, D. C.	Characteristics of diurnal tides, with a list of some places where they are known to occur; blue prints of typical curves; various pamphlets.
21	B. F. Koller, Shrewsbury, Pa	Change of magnetic declination between the years 1806 and 1907 in the southeastern part of York County, Pa.; also pamphlets and magnetic charts.
23	U. S. Geological Survey, Washington, D. C	Descriptions and geographical positions of Helena, Mont., astronomical station and courthouse spire.
24	Theo. G. Hoech, royal Prussian inspector of public works, German legation, Washington, D. C.	Tidal information.
24	W. S. Harshman, Nautical Almanac Office, Washington, D. C.	Tidal information.
25	J. W. Sackett, St. Augustine, Fla	Explanations in regard to geodetic data on the west coast of Florida.
26	J. Mechan, New York, N. Y	Information concerning the actual location of the boundary line between Virginia and North Carolina, in the vicinity of Knott Island.
26	U. S. Fish Commission, Washington, D. C	Blue prints of 3 topographic sheets of part of San Francisco Bay, California, including oyster beds and shore line.
26	Hon. C. K. Davis, U. S. Senator, Washington, D. C	Map showing Hawaiian Islands and their distances from various points; tracings of part of Berghan's chart of the world on Mercator projection.
28	J. F. Le Baron, Jacksonville, Fla	One hundred and fifteen geographical positions on the coast of Florida and on the St. Johns River.
29	R. H. Faries, Williamsport, Pa	Magnetic information and isogonic and annual change charts for 1900.
30	Samuel River, San Antonio, Tex	Description and geographical positions of 5 astronomical stations in the State of Texas.

OFFICE REPORT NO. 1—1897.

REPORT OF THE ASSISTANT IN CHARGE OF THE OFFICE FOR THE FISCAL YEAR ENDING JUNE 30, 1897.

UNITED STATES COAST AND GEODETIC SURVEY OFFICE,
Washington, D. C., June 30, 1897.

GENERAL: I have the honor to submit herewith the annual reports of the heads of the various subdivisions of this Office, which are so detailed that but little comment is necessary, but certain principal matters may be here mentioned.

The computing division has carried forward the computations of the great transcontinental arc. It has completed the adjustment of the telegraphic longitude connection of North America and Europe, and of the primary longitude net of the United States, and prepared these results for publication. Extensive papers on the distribution of the magnetic declination, dip, and intensity for the epoch January, 1900, have also been prepared for publication.

In the tidal division the proof of the Tide Tables for 1897 was read and the predictions for the tables of 1898 were completed, and the predictions for forty stations for 1899 were made. The preparation of Parts I and II of the Manual of Tides was continued by Dr. Harris.

The necessity of an increase in the force of computers is pointed out, and I concur in the recommendation of the chief of this division in regard to this matter.

In the drawing and engraving division many of the charts have been corrected from surveys made under the direction of the Chief of Engineers, by whose courteous cooperation much valuable information is promptly furnished to this office.

The operations of the printing section have been facilitated by the substitution of a 600-ton hydraulic press for the roller calendering press formerly used.

The details of the operations of the chart division require no mention other than the report itself. The chief of that division, in addition to his regular duties, prepared at my instance a Table of Depths of the Channels and Harbors of the Coast of the United States, which has been published as Bulletin No. 36.

The miscellaneous division calls attention to an increase in the number of agencies for the sale of charts.

The instrument division notes the progress made in the construction of the tide-predicting machine, for the use of the tidal division, and the construction of new tide gauges on improved designs.

In regard to the library and archives, it has seemed to me a wise policy to restrict the accumulation of books to the necessities of the office and not to attempt the collection of a large number.

No change has been made in the immediate office of the Assistant in Charge. Mr. A. B. Simons has continued to act as clerk to the Assistant in Charge, attending to manifold duties, including the keeping of the accounts of the moneys received by this Office. Mr. Eugene B. Wills has had charge of leave of absence record and the shipment of materials from this office. Miss Sophie S. Hein and Miss Kate Lawn have attended to the typewriting and many miscellaneous duties appertaining to their desks.

In addition to his other duties the Assistant in Charge has acted as Superintendent during your absence.

Yours, very respectfully,

O. H. TITTMANN,
Assistant in Charge of the Office.

Gen. W. W. DUFFIELD,
Superintendent U. S. Coast and Geodetic Survey.

REPORT OF THE COMPUTING DIVISION, COAST AND GEODETIC SURVEY OFFICE, FOR THE FISCAL YEAR ENDING JUNE 30, 1897.

COMPUTING DIVISION, *June 30, 1897.*

SIR: In conformity with the regulations and usage of the Survey, I have the honor to present herewith my annual report of the work done by the members of the computing division during the fiscal year ending June 30, 1897.

The charge of this division has remained with the undersigned. I regret to have to state the loss the computing division suffered in the death of C. H. Kummell, which occurred April 17, 1897. Mr. Kummell was an accomplished mathematician, and was connected with this division of the office since November 8, 1880. The place has not yet been filled, and the force was still further reduced by the enforced absence through ill health of H. F. Flynn, who was temporarily assigned to field duty after a severe sickness in February last. Some assistance was given by short assignments to office work of members of the field force. The division remains without a clerk.

The various duties devolved upon the chief of this division are so well known as not to be in need of yearly restatement; it is sufficient to say that they were promptly attended to, though the annual official correspondence, as referred to this division, appears to increase in volume. Three important and extensive papers were prepared for publication, in which I had the effective aid of Mr. Hazard, of this division. They are entitled "Distribution of the magnetic declination in the United States for the epoch January, 1900," with two charts; "Distribution of the magnetic dip and the magnetic intensity in the United States for the epoch January, 1900," with three charts; and "The telegraphic longitude connection of North America and Europe and adjustment of the longitude net of the United States," with a map. The first paper is published in the 1896 report; the second contains results of observations of dip and intensity at more than 1 600 stations, together with the charted values for the advanced epoch; the third paper contains the individual results of telegraphic differences of longitude for 45 stations and the adjustment of the 72 differences of longitude; the older cable connection with the European system is now strengthened by the introduction of the Canadian determination of 1892. Four papers on results of spirit leveling were prepared for publication as appendices to the 1896 report. The general introduction explanatory of the transcontinental triangulation was written out, as well as an account of eight of the ten base lines contained in it; this includes statement of the position of the bases, their unit of measure, resulting length and probable error, adjustment of the base net, and probable error of the sides joining the net to the triangulation. I have also kept up to date the discussion of the magnetic elements.

A condensed specification of the work done by each computer during the fiscal year is herewith submitted; it is made up from the daily and monthly reports.

Edward H. Courtenay was engaged mainly in the computations and adjustments of the triangulations, viz, coast of Texas, Sabine Pass to the Brazos River, 1848–1882; Côte Blanche and Vermillion bays, 1855–1890; computed spirit levels in connection with the Salt Lake and Salina base lines; computed a number of abstracts of horizontal directions of principal stations in Kansas, Maryland, and Delaware, and prepared them for publication; attended to a number of miscellaneous geodetic computations; supplied data required for field or other parties; had charge of the geographical registers and of duplicates of records, and supervised part of the work of several of the younger computers.

Myrick H. Doolittle was chiefly engaged in the preparation of abstracts of vertical angles at all the primary stations in the transcontinental triangulation passing through Nevada, Utah, and Colorado, to close of field season of 1896; he prepared also abstracts of horizontal directions of stations about the Salt Lake base, and adjusted the base net, and computed the height of stations between Mount Diablo and Point Arena, Cal.

Charles H. Kummell was engaged in the computation of geographic positions in Texas and Louisiana, in solving equations, and on miscellaneous geodetic work; he also computed the azimuth of stations Los Angeles northwest, Los Angeles southeast, Mount Toro, Point Isabella, Minneapolis, and Salina, 1896.

J. B. Boutelle computed part of triangulations of Hudson River, New York, 1854–1895; of Perdido Bay, Florida; Perdido River and coast between Pensacola Bay and Perdido Bay, and

of Brazos River, Texas, 1896, and San Francisco Bay, 1897; computed a number of geographic positions in Texas, Louisiana, and Florida; attended to miscellaneous geodetic computations, to entering of position into the geographic registers, to copying of reports, and other clerical work.

Daniel L. Hazard computed the following differences of telegraphic longitudes: El Paso and Austin, Austin and Laredo, Austin and Galveston, Austin and New Orleans, Cambridge and Calais, Key West and Charleston, all of 1895; and Washington and Cambridge, Washington and Ithaca, Ithaca and Cambridge, Washington old and new sities of United States Naval Observatory, Key West and Atlanta, Atlanta and Little Rock, Washington and Charleston, Albany and Cambridge, Albany and Montreal, Albany old and new site of observatory; San Francisco, Lafayette Park and Presidio stations; Washington, Old Naval Observatory and Coast and Geodetic Survey Office, all of 1896, and Washington and Dover of 1897; revised also older telegraphic longitude abstracts and assisted me in the preparation of a paper on the telegraphic longitude results. He computed the astronomic azimuth of Uncompahgre, Colo.; Mount Conness, Cal.; Mocho, Cal.; Unalaska, Alaska; and Minneapolis, Minn., and revised several azimuth computations. Mr. Hazard also computed the chronometric differences of longitude between Sitka and Kadiak and Unalaska, Alaska, 1896, and computed the magnetic observations made by Baylor, Putnam, and Faris in 1896, and those by Baylor and French in 1897. He revised also the collection of dips and intensities of Appendix No. 1, Report for 1897, as prepared by me. As in preceding years, the amount of work done by this computer is remarkable for its magnitude.

Harry F. Flynn computed the following astronomic latitudes: Patmos Head, Utah; Wasatch, Utah; Tavaputs, Colo.; Ellsworth and Wallace in Kansas; Pikes Peak and Uncompahgre in Colorado, and Union City, Ind. After February 15, 1897, with the exception of nine days in May, the computing division lost his services, first on account of sickness, and about a month later by assignment to field duty for restoration of his health.

Lilian Pike was principally engaged on the computation of astronomic latitudes; assisted in the revision of the table of magnetic dips and intensities; computed the length of the speed-trial course in San Francisco Bay; prepared abstracts of vertical measure for heights in Kansas; solved normal equations; and assisted in revisions or checking of various geodetic work.

Francis W. Clay plotted magnetic stations and results for dip and intensity for the epoch 1900; computed geographic positions in the States of New York and Louisiana; solved normal equations; attended to some work in connection with the tidal division; reduced horizontal directions of the triangulation about Salina base, Kansas, and of the primary branch from Kent Island to Cape May, 1896–97. He attended also to miscellaneous geodetic revisions and to copying of information needed in the field.

The following members of the field force were temporarily assigned for duty in this division:

H. G. Ogden was engaged in the computation of apparent places of stars; assisted in the computation of the triangulation of the coast of Texas, 1848–1882, putting the same on modern data; prepared abstracts of horizontal directions, triangulation of Vermilion Bay, Louisiana. He was detached from the computing division on December 12, 1896.

F. A. Young, assistant, reported for duty September 8, 1896, and left for field work December 4, 1896. During this interval he revised spirit-level results prepared for publication and computed apparent places of stars.

A. T. Mosman, assistant, was assigned to duty in this division November 2, 1896. He computed the time and azimuth at the following stations: Mount Toro, Santa Lucia, and Santa Ana, California, all of 1885; Point Isabel, Texas, Balch and Ranier, Oregon, of 1886; Minneapolis, Minn., and Fitzsimmons, Wis., of 1887; Fort Johnson, Charlotte, S. C., and Montgomery, Ala., of 1890; and Lake Pontchartrain, Louisiana, 1896. He computed the length of the Salina base, Kansas, 1896, and prepared abstract of horizontal directions, station Mahon, Del., 1896. Was assigned to field duty April 7, 1897.

Isaac Winston, assistant, reported for duty April 7, 1897. Between this date and May 15, 1897, when he left for field duty, he advanced the computation of spirit levels west of Holliday, Kans., 1895–96.

W. Bowie, aid, was assigned to the computing division April 19, and remained until June 26. During this interval he assisted in the above work of checking spirit-level results.

J. B. Baylor, assistant, was assigned to the computing division June 21, 1897, and during the remaining ten days of the fiscal year computed his magnetic observations made in Virginia in 1897 and commenced abstract of horizontal angles at Turkey Point, Maryland, 1897.

Yours, respectfully,

CHAS. A. SCHOTT,
Assistant and Chief of the Computing Division.

Mr. O. H. TITTMANN,
Assistant in Charge of Office.

REPORT OF THE TIDAL DIVISION, COAST AND GEODETIC SURVEY OFFICE, FOR THE FISCAL YEAR ENDING JUNE 30, 1897.

TIDAL DIVISION, *June 30, 1897.*

SIR: I have the honor to submit the following report of the tidal division for the fiscal year ending June 30, 1897:

The reading of the proof of the Tide Tables for 1897 was completed; the predictions for 1898 for the 44 stations remaining at the close of my last report were made, as also an extensive revision of certain columns of Table 3, Tide Tables for 1898, and the whole tables were read and revised in proof. While these tables are essentially similar to those for 1897, a number of new stations were added in Table 3, especially on the Atlantic and Gulf coasts of the United States. The explanation of tables has been made a little more detailed, and I have added a list of authorities to which we are indebted for valuable tidal data.

The work of preparing the Tide Tables for 1899 was taken up as soon as the tables for 1898 were out of the way, and predictions have been made for 40 stations.

Harmonic analyses have been made for a year each of hourly ordinates at Cedar Keys, Pensacola, and Tortugas Harbor, Florida; Tampico, Mexico; and Yokohama, Japan. Short series of hourly ordinates were analyzed for Havre, France; Lisbon, Portugal; Cape Horn, South America; and Port Russell, New Zealand. The summations have been made for a year each of hourly ordinates at Willets Point, N. Y.; Washington, D. C.; and St. Marks light, Florida, constituting the most laborious portion of an harmonic analysis for these places. The total work done on the harmonic analysis during the year is the equivalent of the complete analysis of about nine years of continuous records.

The nonharmonic reductions completed during the year consist of 14 series, the equivalent of about four years of continuous observations.

Several auxiliary tables have been computed to assist in our work, the most extensive being an enlargement of the table of coefficients for correcting the uneliminated effect of one harmonic component upon another.

The preparation of Parts I and II of the Manual of Tides has been continued. In the preparation of the historical matter pertaining to Part I, the tidal work accomplished by Newton, Bernoulli, Lubbock, Whewell, Airy, and Ferrel has been gone over in considerable detail, while many other workers on tides have been more briefly noticed. A good deal of study has been given to the subject of water waves under several assumed conditions, and an effort has been made to explain the tides as they exist in nature by the theories applicable to them under various circumstances.

Tide notes have been prepared and furnished for 72 stations on 23 charts.

Requisitions from 18 field parties have been filled, requiring the description of 75 bench marks and tidal data for 35 stations.

Tidal information has been called for by 95 persons not connected with the Survey, the response to which required the preparation of 56 descriptions of bench marks, current tables for 7 stations, and tidal data for 189 stations, together with technical letters explaining tidal phenomena.

An aggregate of about twelve years of record from automatic tide gauges has been received, examined, and registered. There were 100 original and 89 duplicate volumes of tidal observations made by hydrographic parties with staff and box gauges, as well as records of currents at 8 sta-

tions, which have been received, examined, and registered in this division during the year. About two years of tabulated hourly heights of the sea, times and heights of high and low waters, and temperatures and densities of the sea, and meteorological data were received.

PRINCIPAL SERIES OF TIDAL OBSERVATIONS MADE DURING THE FISCAL YEAR.

Automatic tide gauge and tide indicator maintained in operation at Fort Hamilton, The Narrows, New York Harbor.—The automatic tide gauge and tide indicator, established in December, 1892, and in May, 1893, respectively, on the wharf of Fort Hamilton, New York Harbor, with the permission of the commanding officer of the fort, have been kept in successful operation during the fiscal year. The station has been in charge of Mr. J. G. Spaulding throughout the year.

Automatic tide gauge and tide indicator maintained in operation at Reedy Island Quarantine Station, Delaware.—The automatic tide gauge and indicator, which were established at Reedy Island Quarantine Station, Delaware River, Delaware, in January, 1896, have been continued throughout the year, with some rather bad breaks in the record. The gauge and indicator are under the direction of Dr. A. H. Glennan, surgeon, Marine-Hospital Service, with various observers.

Automatic tide gauge at Washington Navy-Yard, District of Columbia.—The tide gauge, which was established in July, 1891, at the navy-yard, Washington, D. C., with the permission of the commandant of the yard, has been kept in successful operation during the fiscal year. The gauge has been attended by the members of the tidal division of this office, under the direction of Assistant H. L. Marindin.

Automatic tide gauge established at Sparrows Point, Md.—This gauge was established at Sparrows Point, Patapsco River, Maryland, in April, 1897, and the record continued to the end of the fiscal year.

Automatic tide gauge maintained at Port Royal Naval Station, South Carolina.—This automatic tide gauge, which was established in April, 1896, with the permission of the commanding officer of the station, was continued until April, 1897, when the station was discontinued. The gauge was in charge of Mr. B. W. Weeks.

Automatic tide gauge established at Fernandina, Fla.—An automatic tide gauge was established at Fernandina, Fla., in May, 1897, and was kept in operation to the end of the fiscal year. The gauge is in charge of Mr. B. W. Weeks.

Automatic tide gauge maintained at Sausalito, Cal.—The automatic tide gauge, which was established at Sausalito, Cal., in February, 1897, has been kept in successful operation during the fiscal year. The gauge is in charge of Mr. H. S. Ballard, under the direction of Assistant A. F. Rodgers.

Tidal and current observations in Seymour Narrows, British Columbia.—This Survey has secured the consent of the Canadian Government to make a series of tidal and current observations at Seymour Narrows, on the north side of Vancouver Island, British Columbia, and the commander of the steamer *Patterson* left a party there, which it is hoped has been successful in securing satisfactory observations, but their report will not be received in time for this report.

Tidal observations from the United States engineers have been received from 12 stations on the Cape Fear River, North Carolina, the record being mostly for day tides only, and varying in length at the different stations from a few weeks to a number of years.

Tidal observations from the Canadian Government have been received for nearly two years of record of each of the following places: Sand Heads, Garry Point, and New Westminster, on the Fraser River, and at Victoria, Vancouver Island, British Columbia.

Tidal observations from Lisbon, Portugal, for the month of January, 1897, have been received from A. J. Pinto Basto, lieutenant, commanding the *Maudovy*, Portuguese navy.

Tidal and current observations registered and reductions made in the tidal division for the fiscal year 1897.

Hydrography.	Total to June 30, 1896.	During fiscal year 1897.	Total to June 30, 1897.
Automatic tide gauges established	111	2	113
Automatic tide guages discontinued	105	1	106
Parties doing tidal work exclusively	.....	4	.....
Parties doing tidal work in connection with hydrographic work	.....	14	.....
Staff and box gauges established	2 430	61	2 491
Staff and box gauges discontinued	2 426	58	2 484
RECORDS.			
Tidal and current observations, originals volumes	5 309	117	5 426
Tidal and current observations, duplicate, volumes	3 565	105	3 668
Aggregate years of record from automatic gauges	326	12	338
Total stations for which reductions have been made	1 744	28	1 772
Aggregate years of record reduced	352	13	365

The following persons were employed in the tidal division for the period given:

Assistant Henry L. Marindin, in charge the whole year.
Mr. L. P. Shidy, the whole year, and acting in charge during the absence of the chief of division.
Mr. F. M. Little, the whole year.
Mr. R. A. Harris, the whole year.
Miss Alice G. Reville, the whole year.
Mrs. Virginia Harrison, the whole year.
Mr. D. S. Bliss, the whole year.
Mr. Ernest Whitehead, the whole year.
Mr. Daniel Hurly, July 1 to November 19, 1896.
Mr. F. W. Clay, August 29 to September 12, 1896.
Mr. E. F. Lopez, December 18 to 26, 1896, and May 10 to 29, 1897.
Miss Ida Peck, January 5 to 29, 1897, one-half of each day.
Mr. B. W. Weeks, April 19 to 28, 1897.

The following field officers have assisted in our work during the year: Assistants J. B. Baylor, J. A. Flemer, W. C. Hodgkins, C. H. Sinclair, and D. B. Wainwright read first proof of our Tide Tables for 1898 in January, 1897; Assistant C. T. Iardella, June 23–30, 1897, copied tidal records for Southport, N. C.; and Mr. Albert F. Zust, aid, has been with us the whole year.

The need for additional help in this division is so great that it would be true economy to provide for at least two additional computers. It would be most satisfactory if one of the new places could be a computer at $1 800 and the other at $900 per annum, as this arrangement would permit of very worthy promotions in the present force. The great mass of accumulated tidal records can not be used for the benefit of navigation unless the working force of this division is increased.

It gives me pleasure to testify to the zealous interest in their work which has characterized the members of this division throughout the year.

Respectfully, yours,

HENRY L. MARINDIN,
Assistant and Chief of Tidal Division.

Mr. O. H. TITTMANN,
Assistant in Charge of Office.

REPORT OF THE DRAWING AND ENGRAVING DIVISION, COAST AND GEODETIC SURVEY OFFICE, FOR THE FISCAL YEAR ENDING JUNE 30, 1897.

DRAWING AND ENGRAVING DIVISION, *June 30, 1897.*

SIR: I have the honor to submit the annual report of the drawing and engraving division for the fiscal year ending June 30, 1897:

SECTION NO. 1—DRAWING.

The changes in the personnel have been as follows:

Mr. C. V. Martin, draftsman, tendered his resignation on October 13, 1896, which was accepted to take effect October 14, 1896.

Mr. Harlow Bacon, draftsman, reported for duty January 6, 1897, having been certified by the Civil Service Commission.

Mr. A. Lindenkohl, draftsman, was reduced in salary on June 1, 1897, from $2 400 to $2 000; and

Mr. E. H. Fowler, draftsman, was promoted to $2 400 per annum and was assigned to duty as chief draftsman on June 25, 1897.

Otherwise the force is the same as during the previous years.

Mr. A. Lindenkohl has been employed in applying the latest surveys to charts, verifying and correcting charts from the surveys of the Corps of Engineers, U. S. A., platting specific gravity observations in the Pacific Ocean, report on densities of the Pacific Ocean, correcting progress sketches for the Annual Report for 1896, projections on copper, and constructing drawing for Mercator Chart No. 5002, "Coast of California."

Mr. H. Lindenkohl has been employed on reductions and drawings for charts to be published by engraving or photolithography, a base map of the Northwest Pacific, correcting progress sketches for the Annual Report for 1896, and transferring isogonic lines to copper.

Mr. E. H. Fowler has been employed on reductions of surveys for engraving or photolithography, verifying proofs, platting triangulation points, making projections for field parties, and on copper.

Mr. E. J. Sommer has been engaged on reductions and drawings for engraving or photolithography, making projections for field parties, and computation of triangulation and geographical positions in Alaska.

Mr. D. M. Hildreth has been engaged on drawings for charts to be published by photolithography, making projections for field parties, verifying projections, and making tracings for outside parties.

Mr. C. H. Deetz has been engaged on drawings for charts to be published by engraving or photolithography, tracings for outside parties, diagrams, map of anchorage ground, port of New York, chart of Annual Change of Declination, bringing up to date the diagrams of original topographic sheets, and making projections for field parties.

Mr. E. P. Ellis has been engaged on drawings of charts for photolithographing, tracings for outside parties, diagrams for the Annual Report of 1896, a drawing showing the location of quarantine and inspection stations in the United States, sketches for the Annual Report, and tracings of tidal curves.

Mr. P. Von Erichsen has been engaged on inking original topographic sheets, making tracings for outside parties, copies of triangulation sketches, projections and shore line on photographs of topographic sheets, measuring areas with planimeter, and transferring shore line and topography on field projections.

Mr. Charles Mahon has been engaged on clerical work.

Mr. C. V. Martin has been engaged in making diagrams of original hydrographic sheets, tracings for outside parties, and a map of Ship Island Quarantine Station.

Mr. Harlow Bacon has been engaged on diagrams of original topographic sheets, tracings for outside parties, and transferring points and shore line to field projections.

During the year the following drawings have been commenced for engraving on plates or for photolithographing:

Chart No.	Title.	Scale.
244	Salem Harbor	1–20 000
248	Boston Inner Harbor	1–10 000
265	Bridgeport to Fairfield	1–10 000
274	Harlem River	1–10 000
490	Entrance to Pensacola Bay	1–30 000
519	Sabine Pass	1–20 000
3081	Birthplace of Washington	1–10 000
3067	San Francisco Bay	1–20 000
5002	San Diego to Point St. George	Mercator.
5052	San Francisco to Cape Flattery	Mercator.
5581	San Francisco entrance	1–40 000
5971	Coquille River entrance	1–10 000
6444	Port Orchard	1–20 000
8051	Portland Canal	1–100 000
8124	Clarence Strait and Behm Canal	
8170	Wrangell Strait	1–20 000
8283	Peril Strait, Alaska	1–40 000
8302	Lynn Canal, entrance to Berners Bay	1–80 000
8303	Lynn Canal, Berners Bay to head of canal	1–80 000
8901	St. Paul Harbor, St. Matthew and adjoining islands	Various.

During the year drawings have been completed for photolithograving or engraving as follows:

Chart No.	Title.	Scale.
337	Boston Harbor	1–40 000
244	Salem Harbor	1–20 000
9375	St. Michaels Bay, Alaska	1–10 000
8124	Clarence Strait and Behm Canal	
8303	Lynn Canal, Berners Bay to head of canal	1–80 000
3081	Birthplace of Washington	1–10 000
265	East Bridgeport to Fairfield	1–10 000
272	Long Island Sound, New Rochelle to Throgs Neck	1–10 000
273	East River, Throgs Neck to Randalls Island	1–10 000
248	Boston Harbor	1–10 000
316a	Kennebec River, Abagadassett Point to Court-House Point	1–10 000
454a	St. Johns River, entrance to Jacksonville	1–30 000
490	Entrance to Pensacola Bay	1–30 000
519	Sabine Pass	1–20 000
T	General coast of Alaska	1–3 600 000
5126	Harbor charts, Santa Barbara Islands	
5971	Coquille River entrance	1–10 000
5706	Noyo anchorage and approaches	1–10 000
6140	Columbia River, entrance to Upper Astoria	1–40 000
6400	Grays Harbor to Semiahmoo Bay	1–300 000
7000	Cape Flattery to Dixon Entrance	1–1 200 000
8001	Olympia, Wash., to Mount St. Elias	1–1 200 000
8224	Gambier Bay, Frederick Sound	1–40 000
8228	Windfall Harbor and Mole Harbor	1–20 000
8237	Symonds Bay, Sitka Sound	1–7 200
8000	Dixon Entrance to Cape St. Elias	1–1 200 000
8075	Revillagigedo Channel	1–80 000
8051	Portland Canal	1–100 000
8500	Icy Bay to Semidi Islands	1–200 000
8090	St. Paul, Pribilof, and St. George islands	1–60 000
9100	Aleutian Islands, Yunaska Island to Attu Island	1–200 000
213	Nantucket Shoals	1–80 000
246	Boston Harbor	1–20 000
254	Connecticut River, Deep River to Higganum	1–20 000
255	Connecticut River, Higganum to Rocky Hill	1–20 000
260	Guilford to Blackstone Rocks	1–10 000
269	Long Island Sound, Stamford Harbor to Little Captain Island	1–10 000
540a	Jamaica Bay and Rockaway Inlet	1–25 000
369[8]	Hudson River, Fifty-third street, New York, to Fort Washington	1–10 000
6140	Columbia River, entrance to Upper Astoria	1–40 000
7000	Cape Flattery to Dixon Entrance	1–200 000
8000	Dixon Entrance to Cape St. Elias	1–200 000
8235	Gastineau Channel and part of Stephens Passage	1–40 000
8240	Sitka Sound	1–80 000
8500	Icy Bay to Semidi Islands	1–200 000
9375	St. Michael's Bay, Alaska	1–10 000
	Paster for chart No. 431, Charleston Harbor	1–30 000
	Anchorage chart of port of New York	1–200 000

Five drawings were made for publication, illustrating the Annual Report.

Twenty-three topographic and 39 hydrographic projections were constructed for field parties.

Twenty-one original plane table sheets were inked and prepared for registration.

The requisition of the photolithograph work has been continued in this division for the fiscal year ending June 30, 1897.

Eleven new charts, 23 new editions, and 13 reprints were furnished during the year, making an aggregate of 13 200 sheets, together with 6 150 copies of the Anchorage Ground, port of New York, and 400 copies of paster for chart No. 431, Charleston Harbor, making 19 750 prints furnished by photolithography, 13 600 for the chart division and 6 150 for the Treasury Department.

SECTION NO. 2.—ENGRAVING.

Number of new charts completed	6
Number of new editions of charts completed	38
Number of sketches and illustrations completed	7
Number of new printing plates reissued	2
Number of section maps of the District of Columbia (four plates each)	1
Number of new charts commenced	7
Number of new editions of charts commenced	36
Number of sketches and illustrations commenced	7
Number of printing plates, reissue, commenced	4
Number of chart plates corrected for printing	502
Number of chart plates printed for chart division	1 109
Number of sketches and illustrations corrected for printing	23
Number of plates in progress during the year, not completed	21
Number of unfinished plates on hand at the close of the year, viz:	
New charts	25
New edition of charts	3
Sketches and illustrations	48

SECTION NO. 3.—ELECTROTYPING.

Number of pounds of copper deposited	2 015
Number of square inches of surface on which deposited	82 565
Number of plates made: bassos 43, altos 33	76

Of this number 18 plates, 10 bassos and 8 altos, were made for the Mexican Boundary Commission, and 10 scroll die plates for the Bureau of Engraving and Printing.

SECTION NO. 4.—PHOTOGRAPHING.

Number of negatives made	160
Number of blue prints made	1 515
Number of silver prints made	292
Number of bromide prints made	1
Number of nigrosine prints made	14
Number of silver prints mounted	149
Number of lantern slides made	36

SECTION NO. 5.—PRINTING.

Number of impressions for chart division	47 258
Number of impressions for Assistant in Charge	1 830
Number of impressions of the District of Columbia survey	2 834
Number of impressions for engraving division	651
Number of impressions for lithographer, transfer proofs	182
Number of impressions of Mexican Boundary plates	257
Total number of impressions	53 012

The force of copperplate engravers employed during the year has been as follows: William A. Thompson, Henry M. Knight, William H. Davis, E. H. Sipe, William F. Peabody, Henry L. Thompson, William A. Van Doren, Alfred H. Sefton, Peter H. Geddes, Harry R. McCabe, William Mackenzie, George Hergesheimer, Frank G. Wurdemann, Hugo E. Franke, William H. Holmes, and Rowland H. Ford. All served throughout the year excepting Messrs. Holmes and Franke, who were appointed September 16, 1896, and November 4, 1896, respectively.

The old or expert engravers have been generally employed, as heretofore stated, on branches of work which they have made specialties, except when their assistance was necessary in making corrections arising from resurveys and in preparing the work for publication. This fiscal year has been exceptional in the amount of correction of plates required, for most of the new editions of charts issued have been corrected from recent surveys of the Corps of Engineers, U. S. A., involving a great deal of change not only in the work itself but in the notes to give the necessary credit. As stated in the report for the fiscal year 1896, it has been of great advantage to the engraving division to form part of the drawing division, for where a reduction of new work has been necessary to advance a plate for publication the reduction has been made with the least possible delay, and as a consequence we have saved a great deal of time and have been able to give the latest information on the charts. Experience shows conclusively that the consolidation of the two divisions was just what was needed for the good of the service, and has resulted in an improvement in the condition of the charts.

Under the engraving contract awarded to R. F. Bartle & Co., June 28, 1895, the following plates were completed during the fiscal year:

Chart No.	Title.	Scale.
213	Nantucket Shoals	1–80 000
5525	Mare Island Strait	1–10 000
6185	Willapa Bay	1–40 000
6303	Port Angeles	1–10 000
8240	Sitka Sound, Alaska	1–80 000

On June 28, 1897, a new contract for engraving was awarded to R. F. Bartle & Co., as follows, the work to be completed within eighteen months from the date of delivery of plates and drawings:

Chart No.	Title.	Scale.
281	Hudson River, New York to Haverstraw	1–40 000
281	Hudson River, Haverstraw to Hamburg	1–40 000
473	San Carlos Bay and Caloosa River	1–40 000
490	Entrance to Pensacola Bay	1–30 000
542	Jamaica Bay and Rockaway Inlet	1–20 000
5261	Santa Barbara and approaches	1–20 000

The requisitions for printing from the chart division have not been as large as during the previous year, and there has not been any serious delay in supplying the demands for charts. The prompt supply is mainly due to the management of Mr. D. N. Hoover, the foreman in charge of the printing.

The personnel of the printing rooms has remained unchanged, with the exception of the death of George B. Crawford, printer; the transfer of Paul W. Dexter, printer's helper, to the chart division, and the promotion of Frank C. Gohre, printer's helper, to be printer, June 12, 1897. The present force is as follows: Plate printers, D. N. Hoover (foreman), Charles J. Harlow, Eberhard Fordan, James L. Smith, and Frank C. Gohre; helpers, Charles F. Locraft, Louis L. Williams, William M. Conn, and Charles W. Buckingham.

The electrotype and photograph rooms, under the management of Mr. Louis P. Keyser, have been properly carried on and have been very successful in the development of all kinds of work that require intelligent and businesslike capacity. During the year electric lights were introduced in the photograph rooms, enabling us to print and make negatives in cloudy weather without depending on sunlight, and consequently a great deal of loss of time has been avoided. Mr. Thomas Roy served as assistant electrotyper and photographer throughout the year.

The general work of the division has been performed by Mr. John H. Smoot in his usual acceptable manner.

The correspondence and detail work connected with photolithographing was performed by Mr. Arthur H. Bailey in a satisfactory manner until August 9, 1896, when he was transferred to the office of the Superintendent. On September 2, 1896, Mr. Joseph M. Morgan was duly transferred

under civil-service rules and performed satisfactory service until transferred to the United States Treasury Department on December 28, 1896. Mr. James M. Griffin was duly certified by the Civil Service Commission on January 28, 1897, and has since that date satisfactorily performed the clerical duties of the division.

The chief of the division, Mr. Will Ward Duffield, having been ordered to Alaska on official business, I was detailed by the Superintendent, on April 2, 1897, to take charge of the division as acting chief.

By direction of the Superintendent, Mr. Edwin H. Fowler was assigned as chief draftsman of the drawing section of this office on June 24, 1897, and placed in charge of the draftsmen and the details of that section. Mr. Fowler has not been in charge long enough to show any material improvement in the results of the drawing section up to June 30, 1897, but I am satisfied that with his experience and capacity to do work he will introduce methods which will bring about greater uniformity in the style of drawing and greatly advance the progress of the operations of the section under his charge.

With the approval of the Assistant in Charge, I assigned Mr. William A. Thompson, engraver, on June 22, 1897, to have the general supervision of the work of the engravers. I find that during the short time he has been acting in this capacity satisfactory results are being obtained and a greater uniformity in the style of engraving has already shown itself.

The printing section has been ably conducted under the supervision of Mr. D. N. Hoover, printer's foreman, and a satisfactory amount of work has been turned out from the printing rooms during the time I have been in charge of the drawing and engraving division.

I respectfully call attention to the advisability of attaching electric power to one of our printing presses. I have for some time been investigating this matter and have ascertained that a suitable motor can be obtained.

The electrotyping and photographing section has been conducted by Mr. L. P. Keyser in an efficient and satisfactory manner. Considering the limited facilities he has had for blueprinting, he has turned out a large number of prints. It would be advisable to enlarge the rooms in this section so that the assistant electrotyper could assist him in getting out work. At present they are too small to admit of two persons working together. The electric plant for photographing and blueprinting on dark, cloudy days has so far given satisfactory results.

In conclusion, I desire to express my appreciation of the cordial and faithful performance of work by all the members of the division under my direction. I wish to call special attention to the efficient and faithful services rendered by Mr. John H. Smoot, chief clerk of the division, and Mr. James M. Griffin, clerk. The latter receives a very small salary, and I recommend that an increase be given him at the earliest opportunity.

Respectfully submitted.

STEHMAN FORNEY,
Assistant and Acting Chief Drawing and Engraving Division.

Mr. O. H. TITTMANN,
Assistant in Charge of Office.

REPORT OF THE CHART DIVISION, COAST AND GEODETIC SURVEY OFFICE, FOR THE FISCAL YEAR ENDING JUNE 30, 1897.

CHART DIVISION, *June 30, 1897.*

SIR: I have the honor to submit the following report of the chart division for the fiscal year ending June 30, 1897:

The division has been under my charge during the year and the following-named persons have been attached to it, whose general duties and term of service have been as noted:

Miss L. A. Mapes, bookkeeping, correspondence, entire year.
Mr. H. R. Garland, issuing and correcting charts, entire year.
Mr. A. G. Randall, correcting charts, entire year.
Mr. Neil Bryant, receiving and issuing charts, entire year.
Miss M. L. Handlan, coloring charts, entire year.

Mrs. F. I. Matthews, coloring charts, one and one-half months.

Mr. Archie Upperman, mounting sheets and joining charts, entire year.

Mr. J. W. Miner, messenger, one month.

Mr. E. O. McNeill, messenger, five months.

The messenger service for six months was performed by detail from the office. There have been detailed from the office temporarily as follows:

Mr. James M. Griffin, three days.

Mr. Paul W. Dexter, two and one-half months.

Misses Mapes and Handlan and Messrs. Garland, Randall, Bryant, Upperman, and McNeill are still on duty. There is a vacancy in the position of chart colorist, and an application to fill it has been made to the Civil Service Commission.

I would call attention to the fact that the force has been considerably smaller in the past two years than previously since the formation of the division, and that the work has been quite as well performed, which I consider due partly to improved methods and partly to greater efficiency in the force as a body.

The following table represents in brief the more important features of the relation of the chart issue for this year to that of the eight years next preceding, or, practically, since the division was established:

Comparison of issues of charts during the fiscal years noted below.

Year.	Total.		Free distribution		Gross sales.		Net sales.	
	Copies.	Values.	Copies.	Values.	Copies.	Values.	Copies.	Values.
1889....	49 312	$20 096	21 088	$8 266	28 224	$11 830	26 540	$11 280
1890....	63 152	26 178	30 112	12 121	33 040	14 057	31 806	13 575
1891....	52 959	23 457	20 811	8 846	32 148	14 611	28 473	13 141
1892....	52 675	23 041	23 451	9 831	29 224	13 209	27 214	12 506
1893....	55 026	24 215	27 310	11 805	27 716	12 409	25 366	11 605
1894....	51 671	22 476	27 702	11 845	23 969	10 631	21 230	9 595
1895....	51 456	22 280	24 892	10 507	26 564	11 773	23 136	10 405
1896....	64 541	26 440	36 516	14 037	28 025	12 403	25 278	11 249
1897....	57 188	23 987	31 977	12 820	25 211	11 166	21 673	9 731

The total issue is 11 per cent smaller than that of last year, but 2 per cent larger than the average of the previous eight years. The free distribution is 12 per cent smaller than last year, but 21 per cent larger than the average. The net sales (gross sales, less copies returned by sale agents) have decreased in copies and value 14 per cent, as compared with the previous year, and 17 per cent in copies and value, as compared with the average.

This result may be attributed, to some extent, to the fact that fewer new charts have been published than heretofore.

The edition of the chart catalogue for 1896 was received in August and 2 000 copies have since been distributed.

The correspondence for the year has amounted to 2 449 letters written.

There have been delivered in this division for issue during the past year eight new charts and maps, all printed by lithography, viz:

Date.	Catalogue No.	Title.
1896.		
Sept. 1	5126	Harbor charts (5); Santa Barbara Islands, California.
Sept. 11	5706	Noyo Anchorage and approaches, California.
1897.		
Mar. 18	8075	Revillagigedo Channel, Alaska.
Mar. 18	8051	Portland Canal, Alaska.
May 24	3081	Washington's birthplace, Virginia.
May 28	8124	Harbor charts (6); Clarence Strait and Behm Canal, Alaska.
May 29	248	Boston Inner Harbor, Massachusetts.
June 12	8303	Lynn Canal, from Point Sherman to head, Alaska.

Twenty-four new copperplate editions of charts and 44 new lithographic editions, 68 in all, have been delivered to this division for issue.

The receipts, issues, and general distribution of charts are given in the following table:

	July 1, 1896, to June 30, 1897.	
	Number.	Value.
ISSUES OF CHARTS.		
Sales agents	24 538	$10 926 ·20
Sales by office and chart division	673	240 ·00
Congressional account	2 500	1 152 ·50
Hydrographic Office, Navy	12 932	5 371 ·10
Light-House Board	1 890	726 ·95
Coast and Geodetic Survey Office	4 676	1 975 ·40
Executive Departments	3 816	1 509 ·70
Foreign governments	691	269 ·00
Libraries	5 042	1 643 ·60
Miscellaneous	430	172 ·25
Total	57 188	23 986 ·70
Condemned	6 356	2 501 ·15
Total issued and condemned	63 544	26 487 ·85
CHARTS ON HAND AND RECEIVED.		
On hand by count July 1, 1896	35 967	13 614 ·05
Received from drawing and engraving division	45 800	19 923 ·45
Received from lithographers	14 113	5 719 ·30
Returned	3 532	1 430 ·30
Total on hand and received	99 412	40 687 ·10
Total issued and condemned	63 544	26 487 ·85
On hand by book July 1, 1897	35 868	14 199 ·25
Difference between book and count	33	11 ·10
On hand by count July 1, 1897	35 835	14 188 ·15

In addition to the direction of the routine summarized in the preceding pages, and assistance in its execution when required, I have attended the meetings of the advisory board on chart publications, of which the chief of this division is ex officio a member, and have otherwise been employed in various ways in connection with the business of that board. I have also prepared a study of the inland waterways of the Atlantic Coast of the United States from New York to Key West, and have compiled and arranged for publication a table of depths for channels and harbors of the coasts of the United States, Bulletin No. 36, which is now in press.

Very respectfully, yours,

GERSHOM BRADFORD,
Assistant and Chief of the Chart Division.

Mr. O. H. TITTMANN,
Assistant in Charge of Office.

REPORT OF THE MISCELLANEOUS DIVISION, COAST AND GEODETIC SURVEY OFFICE, FOR THE FISCAL YEAR ENDING JUNE 30, 1897.

MISCELLANEOUS DIVISION, *June 30, 1897.*

DEAR SIR: I have the honor to submit the following report of the miscellaneous division for the fiscal year ending June 30, 1897:

The duties required of the division include the correspondence with sales agents relating to the supply and sale of charts, coast pilots, and tide tables, and keeping the accounts connected therewith; the purchase, custody, and issue of stationery used in the office and by the field parties, and all miscellaneous supplies for the office, and the keeping of accounts of all expenditures for those purposes; the printing and issue of the annual reports and all other publications

of the office, including all record books, blank forms, etc., used in the transaction of the work of the office and field parties; the care and general supervision of the office buildings and other duties of a miscellaneous character.

The following statement partially shows the work done in the division during the year:

Letters written	3 660
Quarterly statements of sales agents examined and verified	292
Circulars to sales agents issued	62
Charts sent to sales agents	24 538
Orders for purchases issued	918
Requisitions made for printing and binding	82
Requisitions for miscellaneous supplies and repairs filled	835
Annual reports distributed (see tabulated statement)	2 386
Appendices to annual reports issued	1 413
Tide Tables issued	6 796
United States Coast Pilot, Atlantic Coast, issued	1 200
Pacific Coast Pilot, Alaska, Part I, issued	44
Pacific Coast Pilot, "California, Oregon, and Washington," issued	40
Bulletins issued	974
Notices to Mariners issued	96
Treatise on Projections, Craig, issued	7
Deep-Sea Sounding and Dredging, Sigsbee, issued	45
Tidal Researches, Ferrel, issued	2
General Instructions for Hydrographic Parties, issued	30
Tables for converting customary and metric weights and measures	70

Thirteen agencies for the sale of publications were established during the year, viz, 10 on the Atlantic and Gulf coasts and 3 on the Pacific coast. Six agencies on the Atlantic coast and 1 on the Pacific coast were discontinued. The total number of agencies on June 30, 1897, was 109.

The following publications were sent to press: Annual Report of the Superintendent for the fiscal year ending June 30, 1896; Supplement to United States Coast Pilot, Atlantic Coast, Parts I–II, III, IV, V, VI, VII, VIII (two editions); Tide Tables for the year 1898; Pacific Coast Tide Tables for the year 1898; Bulletin No 36, and Notices to Mariners, Nos. 209 to 220, inclusive.

The distribution of annual reports was as follows:

Date of report.	Domestic distribution.		Foreign distribution.		Total.
	To individuals.	To institution.	To individuals.	To institutions.	
1851		1			1
1852		2			2
1853		2			2
1854		3			3
1855		3			3
1856		2			2
1857		2			2
1859		3			3
1860	1	3			4
1861		3			3
1862		2			2
1863		3			3
1865	2	3			5
1866		3			3
1867	1	3			4
1868		3			3
1871		2			2
1872		2			2
1873	2	3			5
1874	7	3			10
1875	1	3			4
1876	5	5			10
1877	5	3			8
1878	5	4			9
1879	11	5			16
1880	29	5			34
1881	15	6			21
1882	22	6			28
1883	18	6			24
1884	31	9			40

The distribution of annual reports—Continued.

Date of report.	Domestic distribution.		Foreign distribution.		Total.
	To individuals.	To institution.	To individuals.	To institutions.	
1885	14	6	.....	.....	20
1886	5	3	.....	.....	8
1887	11	5	.....	.....	16
1888	19	6	.....	.....	25
1889	16	6	.....	.....	22
1890	24	7	.....	.....	31
1891, Part I	9	4	.....	2	15
1891, Part 2	35	8	.....	2	45
1892, Part I	9	4	.....	1	14
1892, Part 2	43	10	.....	1	54
1893, Part I	12	5	2	1	20
1893, Part 2	61	11	3	3	78
1894, Part I	37	9	3	3	52
1894, Part 2	154	20	3	2	179
1895	537	738	23	251	1 549
Total	1 141	945	34	266	2 386

The following publications were received from the Public Printer, viz:

Name of publication.	No. of copies.
Report of the Superintendent of the United States Coast and Geodetic Survey for the fiscal year ending June 30, 1894, Part 2	480
Report of the Superintendent of the United States Coast and Geodetic Survey for the fiscal year ending June 30, 1895	2 000
Appendix No. 1, Report for 1895.—Secular Variation of the Earth's Magnetic Force in the United States and in some Adjacent Foreign Countries	1 000
Appendix No. 2, Report for 1895.—Abstract of Resulting Latitudes of some Prominent Stations in Alaska and Adjacent Parts as Astronomically Determined during 1889–1895	250
Appendix No. 3, Report for 1895.—Abstract of Resulting Longitudes of some Prominent Stations in Alaska and Adjacent Parts as Astronomically Determined during 1889–1895	250
Appendix No. 5, Report for 1895.—Report on the Changes in the Depths on the Bar at the Entrance to Nantucket Inner Harbor, Massachusetts, between the years 1888 and 1893	200
Appendix No. 6, Report for 1895.—Notes on the Specific Gravity of the Waters of the Gulf of Mexico and the Gulf Stream	500
Appendix No. 7, Report for 1895.—A Graphic Method of Reducing Stars from Mean to Apparent Places	200
Appendix No. 8, Report for 1895.—Description of Leveling Rods, Designed and Constructed by the Coast and Geodetic Survey for use in Geodetic Leveling Operations	200
Appendix No. 10, Report for 1895.—Tables of Azimuth and Apparent Altitude of Polaris at Different Hour Angles	300
Appendix No. 11, Report for 1895.—Original Topographic and Hydrographic Sheets, Registered in the Archives of the United States Coast and Geodetic Survey	100
Tide Tables for the year 1897	2 564
Tide Tables of the Pacific Coast of the United States for the year 1897	4 000
Tide Tables for the year 1898	2 500
Tide Tables of the Pacific Coast of the United States for the year 1898	3 000
United States Coast Pilot, Atlantic Coast, Part VIII, Gulf of Mexico, from Key West to Rio Grande	601
Supplement to United States Coast Pilot, Atlantic Coast, Parts I, II, III, IV, V, VI, VII, Rules of the Road at Sea and in Harbors, Rivers, and Inland Waters (except the Great Lakes and their connecting and tributary waters, as far east as Montreal)	500
Supplement to second edition United States Coast Pilot, Atlantic Coast, Part IV, from Point Judith to New York	300
Supplement to first edition United States Coast Pilot, Atlantic Coast, Part V, from New York to Chesapeake Bay entrance	200
Supplement to United States Coast Pilot, Atlantic Coast, first edition, Part VI, Chesapeake Bay and Tributaries	300
Catalogue of Charts and other Publications, 1896	2 500
NOTICES TO MARINERS.	
No. 208, June, 1896—Chart corrections during the month	5 500
No. 209, July, 1896—Chart corrections during the month	5 500
No. 210, August, 1896—Chart corrections during the month	5 500
No. 211, September, 1896—Chart corrections during the month	5 500
No. 212, October, 1896—Chart corrections during the month	5 100
No. 213, November, 1896—Chart corrections during the month	4 400
No. 214, December, 1896—Chart corrections during the month	4 750
Index to notice to mariners, 1896	4 400
No. 215, January, 1897—Chart corrections during the month	4 500
No. 216, February, 1897—Chart corrections during the month	4 300
No. 217, March, 1897—Chart corrections during the month	4 300
No. 218, April, 1897—Chart corrections during the month	4 400
No. 219, May, 1897—Chart corrections during the month	4 400

The following-named persons were employed in the division during the year:

F. R. Green, clerk.
Marie L. Fout, writer.
P. J. Mullen, engineer.
David Parker, watchman.
John W. Drum, watchman.
J. A. McDowell, watchman.
J. A. Dorsey, watchman.
Ed. D. Scott, messenger.
Charles Over, messenger.
Thomas McGoines, messenger.
Charles H. Jones, messenger.
William R. McLane, messenger.
John W. Miner, messenger.
Owen E. McNeill, messenger, transferred to chart division February 6.
Attrell Richardson, packer and folder.
Horace Dyer, fireman.
Baylor Crutchfield, laborer, March 26 to April 30, 1897.
John H. Brown, laborer.
Boston Brown, laborer.
John H. Mason, laborer.
Virginia McGlincey, laborer.
J. B. Williams, laborer, November, 1896, to May 4, 1897.
Alfred Gilbert, extra laborer.
Walter Y. Clark, extra laborer.

Respectfully, yours,

W. P. RAMSEY,
Chief of the Miscellaneous Division.

Mr. O. H. TITTMANN,
Assistant in Charge of Office.

REPORT OF THE INSTRUMENT DIVISION, COAST AND GEODETIC SURVEY OFFICE, FOR THE FISCAL YEAR ENDING JUNE 30, 1897.

INSTRUMENT DIVISION, *June 30, 1897.*

SIR: I have the honor to submit the following report of the work of the instrument division for the year ending June 30, 1897:

This division has the accounting for all property belonging to this service, except office furniture and supplies, wherever it may be, whether in the office, in storage and pasturage, or in field use, such as all the vessels and their complete equipment, camps and their equipment, pack animals, etc., including the storage and pasturage accounts of all the foregoing when not actually in use by field parties, i. e., between seasons. During the time that any of the foregoing are in use they are transferred and charged to the chiefs of the parties ordered to take charge of the respective pieces of work. In addition to the foregoing, the division is charged with the required repairs to and necessary reconstruction of the instruments used in the field and in the office; the repairs to the machinery, presses, photographic and electric apparatus, furniture, and buildings of the office; the planning and making of working drawings; the construction of new apparatus and instruments; the determination of instrumental constants, so far as it is practicable to do so at the office; the selection of new instruments to be purchased; the making of specifications for new instruments to be made by contract; the selection, adaptation, and sending out of all instruments used in the field and the various divisions of the office; and the selection of all material and tools required for carrying on the different varieties of work.

The following-named persons were employed in the division during the year:

William C. Maupin, clerk, one year.
E. G. Fischer, chief instrument maker, one year.
Otto Storm, mechanician, one year.
Clement Jacomini, instrument maker, one year.
W. R. Whitman, instrument maker, one year.
M. Lauxmann, instrument maker, one year.
S. A. Kearney, instrument maker, July 1, 1896, to March 31, 1897.
C. E. Regennas, instrument maker, July 1, 1896, to April 26, 1897.
Joseph A. Clark, instrument maker, April 13 to June 30, 1897.
Thomas A. Gibson, instrument maker, May 17 to June 30, 1897.
H. O. French, carpenter, one year.
G. W. Clarvoe, carpenter, one year.
C. N. Darnall, carpenter, one year.
J. W. Hunter, messenger, one year.

From September 28 to October 7 I was absent on field duty, repairing, adjusting, and repainting the tidal indicator at Reedy Island Quarantine Pier, Delaware River, during which time Mr. E. G. Fischer, chief instrument maker, acted as chief of the division.

The major part of the work in the instrument and carpenter shops is in the nature of repairs and reconstruction, most of the new work being of special design for the specific and peculiar work of this service.

The following tables, Nos. I and II, give statistics of repairs and new work, respectively, and Table No. III a list of instruments purchased:

TABLE I.—*Summary of instruments, apparatus, and machinery repaired and remodeled between July 1, 1896, and June 30, 1897.*

Instrument.	Number.	Instrument.	Number.
Alidades, plane table	4	Magnetometers	6
Azimuth circle, marine	1	Meridian instruments	6
Barometers, aneroid	2	Parallel rulers	1
Barometers, mercurial	3	Photograph dark rooms, repaired and remodeled	2
Backing bench, chart mounting	1	Plane tables	14
Base bars	6	Plate-printing process	2
Base-bar trestles	6	Proportional dividers	2
Base-bar sectors	2	Protractors, three-arm	30
Beam compasses	2	Psychrometers	7
Binoculars	8	Ruling machines, copper plate	2
Bow pens	4	Scale, metric	1
Camera, photographic	1	Section liner	1
Chronometers	9	Sectors	4
Chronographs	8	Sextants	31
Comparators ("Bessel")	1	Sextant mirrors, resilvered	198
Comparator, 50-metre, standard	1	Signal lamps	7
Compass declinometers	9	Spring balances	1
Compasses (liquid), mariner's	37	Stamps, printing	2
Comptometer	1	Stencil punches	1
Comptograph	1	Straightedges, steel	6
Densimeters, optical	1	Switch boards, telegraph longitude	2
Dip circles	11	Tape, steel	1
Dividers	4	Telemeters	7
Dynamo	1	Telescope, reconnoitering	1
Gas engines	2	Theodolites	64
Gradienters	7	Tide gauges, self-registering	4
Heliotropes	29	Tide-predicting machine	1
Lamps, photographic, copying, arc	3	Transits, astronomical	8
Levels, geodesic	3	Transits, engineer's	3
Levels ("Locke"), hand	6	Vertical circles	2
Levels, "Y"	5	Watches	21
Leveling rods	9	Watches, stop	2
		Zenith telescopes	2

TABLE I.—*Summary of instruments, apparatus, and machinery repaired and remodeled between July 1, 1896, and June 30, 1897*—Continued.

Instrument.	Number.
REPAIR WORK FOR UNITED STATES OFFICE OF STANDARD WEIGHTS AND MEASURES.	
Avoirdupois weights for State of Massachusetts, 1 set	9
Avoirdupois weights for State of Massachusetts, 2 sets	64
Balance, small size, for State of Massachusetts	1
Balance, large	2
Balance, spring	1
Capacity measures, liquid, for State of Massachusetts, 2 sets	10
Capacity measures, liquid, for State of Massachusetts, 1 set	6
Capacity measures, liquid, for State of South Carolina, 2 sets	10
Capacity measures, dry, for State of Massachusetts, 1 set	6
Capacity measures, dry, for State of Massachusetts, 2 sets	8
Coefficient of expansion apparatus	1
Comparator for State of Massachusetts	1
Comparators Nos. 3 and 4	2
Comparator, 50-metre, standard	1
Comparator ("Saxton")	1
Decalitres Nos. 42, 43, and 44	3
Decalitre for State of Massachusetts	1
Half bushels	3
Litres	5
Litre for State of Massachusetts	1
Mecurial distilling apparatus	1
Metre, end, for State of Massachusetts	1
REPAIR WORK FOR UNITED STATES OFFICE OF STANDARD WEIGHTS AND MEASURES—Continued.	
Metre, line, for State of Massachusetts	1
Metres, standard, steel, Nos. 19, 43, 45, 46, 47, 49	6
Metric weights for State of Massachusetts, 1 set	2
Optical beam compass	1
Steel standard, 2-foot bars	2
Steel 70-inch standards of Ordnance Department, U. S. A.	5
Switch boards	1
Thermometer comparator	1
Troy weights for State of Massachusetts, 1 set	15
Troy weights for State of Massachusetts, 1 set	19
Troy weights for State of Massachusetts, 2 sets	24
Yards, standard, for State of Massachusetts	2
Yard, standard, for State of Nebraska	1
REPAIR WORK FOR UNITED STATES MARINE-HOSPITAL SERVICE.	
Ampere metre	1
Formaldehyd boiler, alterations and additions	1
Induction coil, large size, alteration	.....
Microscopes, compound	2
Thermograph, remodeled	1
Total number of instruments, apparatus, and machines repaired and remodeled	860

TABLE II.—*Summary of new instruments, apparatus, and machines constructed between July 1, 1896, and June 30, 1897.*

Instrument.	Number.
Base tapes	11
Beam compass beams	7
File cases, for records	12
Float-tube, of copper, for tidal station	1
Hooks, for instrument cases	12
Lamps, photographic copying, installing of	3
Negatives (8 by 10) of instruments and apparatus	6
Negative boxes, for archives	10
Plate boards, engraver's	2
Press boards, plate printing, hard wood	12
Punches, card, stencil	3
Racks, iron, for chart cases, archives	3
Stationery chests, field	2
Stand, for zenith telescope	1
Tape stretchers, for base measure	2
Telemeters	4
Telemeter targets	2
Tidal copying scale	1
Tidal reading scales, engraved on glass	6
Tide staffs	9
Trays, photodeveloping, large	4
Tripod, magnetometer	1
Weights for draftman's copying stands	12
UNITED STATES MARINE-HOSPITAL SERVICE.	
Adapter for stereopticon	1
Air-testing apparatus, for use in cars	1
High frequency coil, "Tessla" form	1
Total number of instruments and apparatus constructed	130

TABLE III.—*Instruments, apparatus, and machinery purchased between July 1, 1896, and June 30, 1897.*

Instrument.	Number.	Instrument.	Number.
Balances, spring	5	Magnifiers, watchmaker's	2
Barometers, aneroid	6	Objectives, anastigmatic, photographic	5
Binoculars	18	Objectives, microscopic	4
Brazing stand and blowpipe connections	1	Objective, telescopic	1
Buttons, electric	24	Odometers	3
Calculating machine ("Brunsvega")	1	Opisometers	4
Chronometer cases, leather, carrying	6	Pens, bow	6
Clocks, hydrographic	60	Pens, ruling	48
Clockworks, for tide gauges	26	Pens, curve	6
Comptograph	1	Planer, "pony"	1
Compasses, pocket	6	Plummets	24
Curves, irregular	12	Racks, negative	2
Curves, logarithmic	2	Rheostats	3
Dividers, spacing	6	Rotators, for ship logs	4
Drawing instruments, cases of	6	Scale, post-office	1
Eye-pieces, microscopic	4	Section liners	3
Eye-pieces, level	1	Sextant index glasses	100
Float-tubes, copper, for tide gauges	1	Sextant horizon glasses	200
Floats, copper, tide gauge	12	Shutter, photographic	1
Frames, printing, photographic	5	Splines	4
Galvanometer, testing	1	Spline weights	4
Graduates, glass	4	Speed indicator	1
Gas forge	1	Straight-edges, draftman's, steel	52
Lamps, instrument	12	Theodolites, 7-inch	2
Lamps, photo-copying	3	Thermometers	18
Lenses, plano-convex, small	19	Trays, rubber, developing	14
Lenses, "Coddington"	4	Triangles, draftsman's, assorted	86
Levels, "Y"	2	Triangles, lettering templates	3
Leveling rods, metric	3	Type, font of	.....
Logs, ship's	4	Total number of instruments, apparatus, and machines purchased	927
Magnifiers, achromatic triplets	5		
Magnifiers, double, pocket	24		
Magnifiers, single, pocket	24		

The work of packing, shipping, receiving, and unpacking of instruments and general property sent to and received from the field, including making and repairing of packing cases, does not appear in the foregoing tables; the statistics of this work are as follows:

Number of instruments cleaned, adjusted, packed, and forwarded to the field	1 110
Number of instruments received from the field, manufacturers, and dealers	1 315
Number of articles of general property packed and sent to the field	641
Number of articles of general property received from the field	668
Number of miscellaneous requisitions from the office necessitating time and labor of skilled workmen	306

The repairs of the office buildings and furniture, including the construction of necessary file cases, have been put up as usual, the former demanding 130 days and the latter 144 days' labor of skilled workmen.

Theodolite No. 21, 6-inch, constructed for this service in 1848 by Gambey, of Paris, had during the forty-nine years of excellent service become so badly worn and damaged as to be of only secondary value. The centers of the instrument, as is almost invariably the case with the Gambey instruments, being of the finest workmanship of the time and made of the best material for the purpose, and still in excellent condition, it was considered best to design a new alidade and telescope for the instrument and thoroughly reconstruct it, making all the upper portions of aluminum, thus making it light enough to carry much greater telescopic power than before, and thereby much increasing its capacity. The circle has been regraduated and new verniers attached. It is now practically a new instrument, and the design and proportions are so satisfactory that the drawings and patterns will be of use in the reconstruction of several others of the same model, size, and approximate age.

Plans and specifications were made for the installment of a 600-ton hydraulic press in the plate-printing rooms of the office.

The construction of a tide-predicting machine, for computing the annual tide tables, has been continued when more important work would permit. About 775 parts of the mechanism have been made during the year. This will be a very comprehensive machine and will do the work of thirty or more computers.

The more modern gauges used by this service were purchased from manufacturers of such apparatus. As their behavior at the regular long series stations was more or less unsatisfactory, it became necessary to improve them, making the changes in the instrument shop by modifying existing and constructing additional attachments, the more important being the tidal division's automatic independent hour marker. This necessitated quite an additional expense, and besides, though they worked fairly well, on account of their original form the alterations and additions caused the gauges to appear very awkward in design. The stock on hand being exhausted, it became necessary to procure more, and to obviate the foregoing obstacles a new and comprehensive design has been made covering all the requirements to date, and detailed working drawings and patterns have been made, and seven of this new form of instrument are in process of construction in the shops.

A set of three-arc photo-copying lamps, with proper rheostats and safety connections, were installed in the photographic rooms of the office.

The values in arc of fourteen astronomical and geodetic levels were determined, two of which were for the observatory of the University of California.

Two aneroid barometers were adjusted and carefully compared several times throughout their scales for the expedition sent to Mount St. Elias.

The United States standard weights and measures exhibited at the Nashville Exposition were packed and forwarded for that purpose.

Efforts have been made in various directions to incorporate labor-saving machines and appliances, which the shops are still in need of, and which could be economically used if there was sufficient room.

I have to call your attention to the very poor and trying light in the instrument shop during cloudy weather, which is not only an annoyance but retards progress, as it is impossible for workmen executing fine work to make desirable accuracy and dispatch under such unfavorable conditions.

A detailed account of each day's work of each employee is kept on file in the division.

It is with pleasure that I have to state that, with a single exception, which has already been removed, there is a hearty and conscientious interest of the employees of the division in their respective duties.

Respectfully, yours,

J. F. PRATT,
Assistant and Chief of Instrument Division.

Mr. O. H. TITTMANN,
Assistant in Charge of Office.

REPORT OF THE LIBRARY AND ARCHIVES DIVISION, COAST AND GEODETIC SURVEY OFFICE, FOR THE FISCAL YEAR ENDED JUNE 30, 1897.

LIBRARY AND ARCHIVES DIVISION, *June 30, 1897.*

SIR: I have the honor to submit the following report of the library and archives division for the fiscal year ending June 30, 1897:

Mr. H. S. King resigned in the latter part of May, 1897, and was granted leave of absence for the month of June. By direction of the Assistant in Charge, with approval of the Superintendent, Mr. Artemas Martin assumed charge of the division on June 1, 1897, as acting chief, and remained in charge during the month of June. On June 8, 1897, Mr. Artemas Martin was promoted to be chief of the division, the promotion to take effect July 1, 1897.

LIBRARY.

More shelf room is needed for the library, and I repeat the recommendation made last year that the two rooms on the second floor, over those now occupied by the library, be fitted up with shelving for the use of the library. If shelves be put up against the walls of these rooms, as in the "board room," they would not interfere with the use of the rooms for other purposes.

During the fiscal year 123 volumes have been added to the library by purchase and 352 volumes were obtained by exchange, etc.

Many new scientific books recently published that bear upon the work of the Survey either directly or indirectly should be added to the library in order to keep it up to date, and I would respectfully recommend that at least $1 000 be allotted to the library for the purpose of purchasing such books during the coming fiscal year.

Our library is not keeping pace in growth with the libraries of other Government bureaus which came into existence long after the Coast Survey was established, some of which contain several times as many volumes.

Summary of books, maps, serials, etc., added to the library during the fiscal year ended June 30, 1897.

Books purchased (volumes)	123
Serials and pamphlets purchased (volumes)	352
Serials and pamphlets obtained by exchange, etc	2 063
Maps and charts obtained by exchange, etc	1 199
Maps and charts purchased	10
Books and periodicals (bound) received from the bindery (volumes)	172

ARCHIVES.

No binding of original records and computations has been done during the fiscal year just ended, as Mr. E. H. Courtenay could not be spared from the computing division to assist in preparing the volumes for the bindery. There is a large amount of work in this line that ought to be done at the earliest possible moment.

The hall-way rooms on the third and fourth floors of the "fireproof" ought to be fitted up with cases and shelving to provide additional room for charts and to relieve the overcrowded back room on the fourth floor of a portion of its contents.

The following is a summary of original and duplicate records, computations, original sheets, etc., received and registered in the archives during the fiscal year ended June 30, 1897:

Original observations, 642 volumes, 124 cahiers, 72 rolls, and 173 sheets; duplicate observations, 544 volumes, 110 cahiers, and 191 sheets; field computations, 9 volumes, 88 cahiers, and 2 sheets; office computations, 6 volumes and 86 cahiers; photography, 35 negatives, 34 lantern slides, 8 mounted prints, and 7 blue prints; log books, 70 volumes; specimens of sea bottom, 295 bottles; descriptive reports, topographic sheets, 4 cahiers; descriptive reports, hydrographic sheets, 10 cahiers; topographic sheets, 29; hydrographic sheets, 44.

FORCE OF THE DIVISION.

Mr. Artemas Martin was employed as a clerk during the whole fiscal year, but he acted as chief of the division during the month of June, 1897. He had charge of registering all original and duplicate records, computations, and original topographic and hydrographic sheets, and of filing the originals in the archives; and answered calls for the same, and for books, and kept account thereof. He also registered the books received by the library, and had charge of the preparation of books and periodicals for binding, and of the preparation of monthly reports, and annual report, etc.

Mr. Edward F. Lopez was employed during the whole fiscal year. He has been occupied with the registering, listing, and filing of the maps and charts received, and in answering calls for the same; with the registering, filing, and listing of the serials and pamphlets received. He also answered calls for books, periodicals, etc., and made out catalogue cards for new books, etc. Mr. Lopez has performed his various duties faithfully and efficiently.

Mr. William H. Butler was employed in the division as messenger during the whole fiscal year, and has performed his various duties, "too numerous to mention," faithfully and efficiently. Owing to his thorough familiarity with the office, in consequence with his long connection with the Survey (over thirty years), his services are of great value.

Mr. B. A. Lynch, having returned from the field, was assigned to this division October 16, 1896, and remained till the end of May, 1897, when he was again detailed for field duty. While in the division he was employed in making a card catalogue of the original topographic sheets filed in the archives and in doing other typewriting.

Mrs. Fanny I. Matthews was assigned to this division May 29, 1897, and remained to the end of the fiscal year. She was employed in making a card catalogue of the original hydrographic sheets filed in the archives.

Another good clerk is needed in the library and archives division. A laborer is also needed, in order that the division may be properly kept "in order"—a young, strong, active man who can climb up and down ladders.

Respectfully, yours,

ARTEMAS MARTIN,
Acting Chief of Library and Archives Division.

Mr. O. H. TITTMANN,
Assistant in Charge of Office.

OFFICE REPORT NO. 2—1897.

REPORT OF THE HYDROGRAPHIC INSPECTOR FOR THE FISCAL YEAR 1897.

UNITED STATES COAST AND GEODETIC SURVEY,
OFFICE OF THE HYDROGRAPHIC INSPECTOR,
Washington, D. C., June 30, 1897.

SIR: I have the honor to make the following report of the hydrographic operations for the fiscal year ending June 30, 1897, so far as they pertain to the naval parties who were working under my supervision. There is also given a synopsis of the movements of, and the repairs made to, the vessels of the Survey, with a list of officers and a table showing the various changes among them during the year. I beg also to append the reports of the chiefs of the hydrographic division and the coast pilot party.

HYDROGRAPHY—ATLANTIC COAST.

The steamer *Blake* and party, under the command of Lieut. Commander A. Dunlap, U. S. N., Assistant, arrived at New York on July 4, 1896, and for the remainder of the month was engaged in completing the office work pertaining to the survey of Port Royal Sound entrance and in preparing for the resurvey of part of Buzzards Bay, Massachusetts. On July 31 the *Blake* left New York for New Bedford, Mass., arriving on August 2, but a week later previous instructions were revoked and the vessel and party were ordered to complete the resurvey of the north shore of Massachusetts Bay. The *Blake* arrived at Gloucester on August 12. Work was begun immediately and finished on October 31, 1896.

The area covered during the season consists of that part of Massachusetts Bay lying along the north shore from Eastern Point, entrance to Gloucester Harbor, to Pickworth Point, near Manchester, and extending seaward for an average distance of 3 miles. The inshore hydrography, within a depth of 10 fathoms, is of exceedingly broken and dangerous character, numerous rocks and ledges extending in every direction. The survey was begun with a general system of right angled intersection of lines 100 metres apart. A close development with double diagonal intersections was carried over many of the shoal spots. Offshore such additional lines were run over outlying banks only. The results from the survey have been highly satisfactory, and credit is due Lieutenant-Commander Dunlap and his party for the thorough manner in which every detail relating to the work has been executed. Special care was exercised in locating every known danger and in developing all other indications of shoals. In this way a number of ledges and rocks were found not heretofore known, and which were at once introduced on our charts. In this connection Lieutenant-Commander Dunlap reports that "the fishermen about Manchester, Magnolia, and Gloucester gave a great deal of assistance, and those from Magnolia often put themselves out in going along to locate rocks, ledges, and shoals. No charge was ever made for services of this kind and I am indebted to them for much valued information."

Lieutenant-Commander Dunlap greatly perfected the nomenclature of geographical points within his working ground, and acknowledges the valuable information rendered by Hon. William H. Tappan, town surveyor of Manchester and president and historian of the Manchester Historical Society.

On October 31 the field work was concluded and the *Blake* proceeded to New York, arriving on November 3, after having stopped at New Bedford to obtain a new whaleboat. On November 12 she left New York and arrived at Baltimore on November 15.

The resurvey of that portion of Chesapeake Bay in the vicinity of the approaches to Baltimore Harbor, from Sandy Point to Tolchester Beach, had been assigned to this party. The necessary signals having previously been erected and their positions located by Lieut. E. H. Tillman, U. S. N., Assistant, commanding schooner *Matchless*, the party on board the *Blake* began sounding work on November 16, 1896. With several interruptions this has been carried on to the end of the fiscal year and continues at the present time.

The detailed instructions sent to the *Blake* require a close and careful survey, lines to be run 100 metres apart, crossed at right angles by another system of lines about the same distance apart. Projections on scale of 1–10 000 were furnished for the purpose of developing closely the dredged channels leading to Baltimore Harbor, and also to enable a close examination of the lumpy area at the mouth of the Patapsco River. Later, and at a time when a complete scheme for the hydrographic resurvey of the whole of Chesapeake Bay had been projected, the instructions named were modified in so far as to allow the opening out of the distances between sounding lines to 200 and 300 metres in areas where a closer development was not considered necessary.

Lieutenant-Commander Dunlap reports that at the end of June, 1897, the party had run 828 miles of sounding lines, and covered 41 square nautical miles of area. Owing to the wide expanse of the bay at this point, the low, unvarying aspect of the shore, and the almost ever-present mist on either one shore or the other, the work, especially in the boats, has been found to be of a trying character. The bottom is for the greater part uneven and broken, causing a rough sea in even a moderate wind. Notwithstanding these drawbacks the party has been indefatigable in pushing the work, and there is good prospect of finishing it before the end of the season.

The interruptions of the regular work, referred to, were caused by cold weather, when repairs were made; the laying out of the Chesapeake Bay speed trial course for torpedo boats, March 17 till April 24, 1897; and attendance at the trial of the torpedo boat *Foote*, June 21 to 26, 1897. The trial course was laid out at the request of the Navy Department. The course as laid out is 24½ nautical miles long and extends from Point No Point to James Point. The south end is marked by a range and by a first-class can buoy. From this point the course runs N. by W. ½ W. to a point 3·35 miles W. by N. from the tripod on James Point, also marked by a first-class can buoy. From this buoy at the north end, S. by E. ½ E. 1 nautical mile, is placed a second-class can buoy; 4·54 miles on the course is a similar buoy, and thence every 4·74 miles it is marked in the same manner, except at the end.

The location of the trial course required the building of eleven large signals, cutting lines of sights and consequent amount of heavy work.

Assistant D. B. Wainwright and Aid R. B. Derickson had been ordered to cooperate in this work and execute the necessary triangulation. Lieut. E. H. Tillman, U. S. N., Assistant, commanding schooner *Matchless*, and his party were assigned for service in connection with the trial course and continued on this duty from March 22 to April 18, 1897.

In relation to the work in Chesapeake Bay Lieutenant-Commander Dunlap makes note of the remarkable erosion of the shore line, especially along the eastern shore. At a number of points large tracts of land have been swept away, and it is the general opinion among the inhabitants that the greater amount of this cutting away of the bluffs and beaches has taken place within the past thirteen years.

During the prosecution of the hydrographic survey the party developed two new shoals, of which immediate reports were made to the office for proper action. One shoal, of quite a large extent, was located 2½ miles E. ¼ N. of Front Light, Craighill Channel Range, with least water of 7 feet over it. The other shoal, with 6 feet on it, lies on edge of channel off Kent Island and opposite Sandy Point Light-House.

At the beginning of the fiscal year the steamer *Bache* and party, under the command of Lieut. R. G. Peck, U. S. N., Assistant, were at the navy-yard, New York, preparing for sea, and left that place on July 6, 1896, for Long Island Sound, where an anchorage was made in the vicinity of Crane Neck, Long Island. The work of overhauling, repairing, and repainting the naval speed trial course beacons, erected by this party in the summer of 1895, was at once begun and prosecuted daily until finished July 10.

Upon the completion of the work on the beacons the *Bache* steamed to New London, Conn.,

for the purpose of obtaining from the lighthouse depot a buoy and sinker with which to mark the new position for the Nantucket South Shoal Light Vessel, which position, by request of the Light-House Board, Lieutenant Peck had been directed to determine after making an examination of the locality. New London was left in the morning of July 11 and New Bedford, Mass., reached on the afternoon of the same day.

On July 13 the *Bache* left New Bedford for the purpose of making the required examination to the southward and westward of Phelps Bank for the new position of South Shoal Light Vessel. This duty was successfully completed by the 16th and the *Bache* returned to New Bedford. Report of the examination and the new position recommended for the light vessel was made to you under date of July 28, 1896. I may here state that this new position was adopted by the Light-House Board, and on October 17, 1896, the light vessel was successfully moved to the position recommended.

For the season's hydrography that portion of Buzzards Bay, covering the south shore of the bay from the vicinity of Woods Hole to a point about a half-mile to the westward of Cuttyhunk Island, was assigned to the *Bache's* party.

A right angled development of the ground covered by the sheets was planned, the lines of each system being 100 metres apart. This distance was reduced to 50 metres in Cuttyhunk Harbor and in all the principal channels where it was considered that a closer development was desirable and important. Special developments were likewise made for all shoals and shoal spots, together with careful search for least water on known rocks and shoals. To secure absolute crossings of soundings, Lieutenant Peck made a very careful study of the tides of Buzzards Bay, for the details of which I beg to refer to the descriptive report accompanying the sheets.

The season's work was completed in a systematic manner, and the high standard attained by the party has been maintained throughout. The weather having become unfavorable for further profitable hydrographic work with the last day of October, the *Bache* left New Bedford and on November 1 arrived at the navy-yard, New York.

Upon your recommendation, Lieutenant Peck has been designated by the Honorable the Secretary of War to make the survey of the Outer Bar at Brunswick, Ga., provided for by the river and harbor act of June 3, 1896. Lieutenant Peck was subsequently instructed, under date of November 30, 1896, to proceed with this survey in accordance with the terms of said act. He left New York on December 19 in the execution of this duty and arrived at St. Simons Sound December 27, 1896, and began operations January 4, 1897. The field work of the survey was completed April 16, and on the 22d of the same month the *Bache* left Brunswick, Ga., for New York, where she arrived April 27, 1897.

The time from this date to June 22 was consumed in prosecuting as rapidly as possible the office work of the survey. The necessity of completing the sheet on board required the plotting of 30 000 soundings (out of 39 000 that were taken), and the close and careful marking of contour lines made the preparation of the sheet a laborious operation.

Lieutenant Peck's report of the survey, together with the sheet thereof and the original records pertaining thereto, have been transmitted to the Honorable the Secretary of War. Copies of all the records and a tracing of the sounding lines run are retained in this office.

This survey of St. Simons Outer Bar is one of the finest pieces of hydrography ever accomplished in such an exposed locality, and reflects credit alike on the Survey at large and the party that achieved it.

On July 1, 1897, Lieutenant Peck was relieved from duty on the Survey, having completed a most successful tour of duty of four years and one month on this work, and ordered to duty at the Naval Academy, Annapolis, Md.

The beginning of the fiscal year found the schooner *Eagre* and party, under the command of Lieut. G. C. Hanus, U. S. N., Assistant, actively engaged in the resurvey of the northern part of Buzzards Bay, Massachusetts, having taken the field on April 21, 1896. Field work continued till late in the fall, when the *Eagre* returned to New Bedford.

The unprecedented amount of work accomplished by this party speaks for itself. Nearly 2,800 miles of soundings, about 700 of which were obtained in pulling boats, is the record made.

Four sheets were furnished the party. Of these, three sheets, including the head of the bay,

Wareham, Onset, Buzzards Bay, Monument Beach, Pocasset, Marion, and Mattapoisett Harbor, were completed. An examination of the north shore and head waters of Buzzards Bay will show that the bottom is broken and irregular throughout. Instead of developing it in sections and losing valuable time, Lieutenant Hanus decided to treat the whole section as one grand shoal. The work is therefore nearly all of a very close development and leaves no room for doubt anywhere.

While engaged in the field work, and in conformity with your instructions, Lieutenant Hanus furnished Mr. E. L. Corthell, C. E., with data for the proposed Cape Cod Canal.

The *Eagre* remained in New Bedford during the winter, and during the time that field work was prevented by cold weather the vessel, steam launches, and boats were overhauled and repaired.

Pursuant to instructions, the *Eagre* sailed from New Bedford on May 18, and, after spending several days in building and cutting in signals, anchored in Marion on May 27, which place was chosen for headquarters on account of its facilities for obtaining coal and fresh water for the launches in which the work must be principally done.

At the close of the fiscal year the season's work had well advanced, and over 500 miles of soundings had been run, principally on the east side of the bay and in the vicinity of Cataumet Bay. It is my expectation that Lieutenant Hanus, in conjunction with another party, will complete the resurvey of Buzzards Bay this season.

Special credit is due to Lieutenant Hanus for the excellence of the work done by this party. His great experience, constant supervision, and thoughtful consideration of every one connected with the work, have given him an enviable standing as a surveyor and commanding officer.

The steamer *Endeavor*, under the command of Lieut. W. S. Benson, U. S. N., Assistant, having left Baltimore, Md., May 13, 1893, was at the beginning of the fiscal year engaged in continuing the resurvey in the vicinity of Montauk Point, New York. Work was begun on May 20, and was continued until August 15, 1896, under Lieutenant Benson's command. After this date the work was conducted under the direction of Lieut. J. J. Blandin, U. S. N., Assistant, who for several seasons previously had served as executive officer of the *Endeavor*. The resurvey was successfully finished on September 24.

In addition to completing the regular systems of lines south of Block Island and Long Island, as provided in the instructions, the *Endeavor's* party was engaged in developing closely the shoal ground off Montauk Point, including Great Eastern Rock and Montauk Shoal. A thorough investigation of the latter shoal failed to show anything less than 5 fathoms. The bottom is hard sand, with no indication of rocks. A careful investigation of Great Eastern Rock showed a depth of $3\frac{1}{2}$ fathoms, instead of 4 fathoms, as heretofore shown. A series of shoals or ridges, extending in a general east and west direction, in latitude 41° 06′ north, and from longitude 71° 47′ west to longitude 71° 51′, were found and named "Endeavor Shoals." The ship's work of the previous season was connected to shore by traverses. The deep cut between Montauk Point and Block Island was further developed, and a set of specimens of bottom taken in it, as it is an excellent guide for entering Block Island Sound in thick weather, and of going clear of the shoals on each side of it at any time.

A number of current stations were occupied, but the time was so short that it was impossible to secure full series of observations or to collect data that will be of more importance than to show the necessity of more extended observations.

On account of the importance of the locality of this survey, both commercially and strategically, the office work was completed as rapidly as possible and the results introduced on all charts affected.

Special examinations in this locality were made off Brightmans Beach, Rhode Island; near buoy No. 14, Fishers Island Sound; Greenport Harbor, Great Salt Pond, Block Island, and the break off the north end of Gardiners Island.

On October 1, 1896, the *Endeavor* left New London for Nantucket Sound to complete the resurvey of those waters. Work was begun on October 3, and considerable difficulty was experienced on account of the long distance from the signals, the hazy weather, and high winds.

The survey failed to show any indication of the 4-foot spots on Horseshoe Shoal, although a careful search was made and the ship was run over the shoals at all stages of the tide. In the same way a number of other shoals, shown on the old survey, failed to realize.

A complete survey was also made of Tarpaulin Cove. As the cove is used for an anchorage by a very large number of schooners, I have recommended that Lieutenant Blandin's survey be utilized for a separate harbor chart of the locality. A project for the same has been submitted to the chart board.

The U. S. S. *Dolphin* having reported a rock near Sakonnet Point, Rhode Island, Lieutenant Blandin was instructed to investigate. He reports the existence of a clump of bowlders with much deeper water around them. Sixteen feet is the least depth over them. This shoal was not known to the fishermen in this locality.

This examination completed the season's work. The *Endeavor* proceeded to New York, and after stopping at New London, New Haven Breakwater, and Hempstead Harbor, arrived at the navy-yard on November 7. On the 9th she started for Baltimore, Md., and arrived on the 11th, and preparations were then begun for the following season's work.

On January 14, 1897, the *Endeavor* sailed from Baltimore for Savannah, Ga., arriving there on January 21. From this time until April 29 the party under the charge of Lieutenant Blandin, was engaged in the resurvey off the mouth of the Savannah River. The working ground extended from outside the bar to the mouth of the jetties and the shoals to the northward and southward of the channels. A rectangular system of lines about 200 metres apart was run over this area and this system crossed by one set of diagonals about the same distance apart. The soundings are very regular, changes being gradual except on the shoals, where there is a great irregularity. The survey also extended to the entrance of Calibogue Sound as far as Braddock Point.

It is thought that the work just completed covers all the ground necessary for navigation. The party determined numerous changes in the shore line.

No difficulty was experienced in doing this work except the great amount of stormy and foggy weather.

As no Coast Survey bench marks are now in existence in this vicinity, Lieutenant Blandin leveled his tide gauge to a bench mark established by the Corps of Engineers, United States Army, on Tybee Point.

Capt. O. M. Carter, Corps of Engineers, U. S. A., in charge of river and harbor improvements around Savannah, furnished the party with much valuable information concerning bench marks, records, etc.

On May 4 the *Endeavor* returned to Baltimore, and on June 18 Lieutenant Blandin was relieved by Lieut. Commander C. T. Forse, U. S. N., assistant. Lieutenant Blandin had been connected with the Survey and the party on board the *Endeavor* since October 21, 1893, and has proved himself a most capable and conscientious officer, whose work has been of the highest order.

Lieutenant-Commander Forse enters upon a second tour of Survey duty, and from his previous record we have reason to congratulate ourselves in obtaining so able an officer.

The *Endeavor* left Baltimore on June 28, 1897, for Buzzards Bay, Massachusetts, where she will be engaged the entire summer. On his passage north Lieutenant-Commander Forse is instructed to take some deep-sea soundings between Fenwick Island Shoal and Five Fathom Bank light vessel.

The schooner *Matchless* was placed in commission on July 3, 1896, and Lieut. E. H. Tillman, U. S. N., Assistant, assumed command on the same day. Upon taking command Lieutenant Tillman immediately proceeded to organize a party and fit out the vessel for hydrographic work, and on July 19 sailed for Norfolk, Va., arriving there on July 23.

Preparations were made to resurvey the water front of the United States navy-yard. Signals having been located and the shore line run in, the sounding work was begun on August 11 and completed on August 25. Throughout the time the weather was so extremely hot that the party could endure exposure to the sun only a few hours each day.

Every effort was made to have the survey accurate and thorough, and this has been accomplished. Lieutenant Tillman reports that considerable trouble was found in getting soundings to cross closely, the depths being extremely irregular, due to the dredging that has been done, and the bottom being sticky mud and the current not strong enough to level it off.

From September 5 to October 23, 1896, the *Matchless* and party were engaged in transporting Assistant J. B. Baylor, Coast and Geodetic Survey, and such material as he required, to the localities that he designated, and furnishing him with the necessary assistance in locating signals.

On October 27, 1896, the *Matchless* arrived at Baltimore, and in accordance with your instructions Lieutenant Tillman and party began the erection and locating of signals for hydrographic work in Chesapeake Bay, between Sandy Point and Tolchester Beach.

The work was completed on November 16 and the vessel prepared for systematic current observations in Chesapeake Bay. On account of cold and bad weather only a few observations could be made, and on December 13 the *Matchless* arrived at the Washington Navy-Yard, where she remained until March 16, 1897.

On March 13, 1897, a survey was made of the Washington Navy-Yard water front. The work was immediately plotted and blue prints furnished the Navy Department and the commandant of the yard.

On March 16 the *Matchless* sailed for Chesapeake Bay, and on March 22, off Point no Point, Lieutenant Tillman reported to the commanding officer of the *Blake*, Lieut. Commander A. Dunlap, U. S. N., for duty in connection with the laying off in Chesapeake Bay of a speed-trial course for torpedo boats. The party was engaged in building signals, etc., until April 18, when the *Matchless* sailed for Baltimore.

Lieutenant Tillman established a self-registering tide guage at Sparrows Point, and on April 28 the *Matchless* was anchored off North Point and began hourly observations for currents, which were continued until May 7.

On May 17 the schooner occupied a position $3\frac{3}{4}$ miles east (true) of Seven Foot Knoll Light. Observations began at noon of that day and continued until 8 p. m. June 16.

On June 22, 1897, Lieutenant Tillman anchored the *Matchless* in the channel about nine-tenths of a mile east by south from Sandy Point Light and began a month's current observations at that station.

HYDROGRAPHY—PACIFIC COAST.

The steamer *Patterson*, Lieut. Commander E. K. Moore, U. S. N., Assistant, commanding, having undergone extensive repairs, was received from the contractors on May 23, 1896, and a trial trip was made on June 18. The officers and crew were moved on board on the 20th, and the party fitted out for the season's work as rapidly as possible.

This was completed early in July, and on the 14th the Superintendent, accompanied by Lieut. H. Rodman, U. S. N., joined the party at Seattle, Wash., for the purpose of observing the topography through which the boundary between Alaska and British Columbia passes and to inspect the nature of the *Patterson's* work, the manner of doing it, and determine as to its accuracy.

The *Patterson* sailed from Seattle on July 14, and on the 19th arrived at Port Simpson. From this day to August 2 the *Patterson* touched at various points in southeast Alaska, including Yakutat Bay, arriving at Sitka on the afternoon of the latter date, thus completing the Superintendent's inspection of the boundary line and general features of the country.

After taking on coal, launching the *Cosmos*, fitting her and other boats for work, and locating an uncharted shoal in Sitka Sound, the *Patterson* left Sitka on August 7 and anchored in Haley Anchorage, Fish Bay, the same day. The season's work began immediately, the Superintendent accompanying the various parties in the field, for the purpose of inspecting the manner of doing the work, until September 23, when he took passage on the mail steamer for Seattle. The primary triangulation was carried down through Peril Strait, across Salisbury Sound, through Neva Strait, across Nakwasina Passage, and through Olga Strait, terminating at Dog Point, on Lisianski Island, and the northern one of the Siginaka Islands, where the last signals were well marked. Also through Salisbury Sound to the sea, where signals were well marked. The secondary or sextant triangulation was carried from the primary at Neva and Olga points to the southward and westward through Krestof Sound to its junction with Sitka Sound, and into Nakwasina Passage from the same points to the eastward, about three-fourths of the distance to its junction with the same sound at Dog Point, leaving these two areas unconnected.

The shore line and hydrography were completed as far as the triangulation in all cases. The topography is finished in Fish Bay and through Peril Strait to its junction with Salisbury Sound, and most of that on the north side of the sound is done also.

The manner of doing the work was the same as that of the previous season, with perhaps a

little more refinement in the triangulation in narrow places. The channels through which the season's work passed are narrower, more intricate, more filled with rocks, islands, etc., than those of the previous season, but the general features are those of all southeast Alaska—high and rugged hills, thickly wooded and covered with underbrush, with bold water in most cases up to the cliffs, and no beach, making it especially difficult to locate triangulation points.

The hydrography and shore line were more difficult for the same reason, and in addition some of these channels were cut up with islands and rocks, requiring greater care and closer developments.

Particular attention was given to the observation of tides; gauges were established at Funter Bay, Pogibshi Point, Haley Anchorage, and at Sitka. Simultaneous observations were taken at Pogibshi Point, on one side of Sergious Narrows, and Haley Anchorage on the other, and at Sitka. Pogibshi showed such a great divergence from the other two that Lieutenant-Commander Moore recommended further investigation, which is being prosecuted during the present season (1897).

Current observations were taken at the Southern Rapids, Sergius Narrows, for practically one lunation, and showed a great irregularity in the time of slack water which was unknown to the pilots before. Lieutenant-Commander Moore's recommendation for further observations of currents in this locality is also being carried out at the present time.

The results of the season's work are embodied in six topographic sheets, covering 27·5 square miles, and 1 897 miles of shore line; five hydrographic sheets, covering 71 square miles of water and 504 miles of soundings run; 22 current stations were occupied. The triangulation embraced the measurement of one base line, the erection of 567 signals, and the occupation of 533 stations for horizontal angles. Seventy-one stations were occupied for vertical measures to determine 92 elevations.

Lieutenant-Commander Moore again calls attention to the courtesy shown the party by the Pacific Coast Steamship Company, and especially by Captain Wallace of the *City of Topeka*, who carried mail and marketing from Puget Sound and stopped at any place where he found the *Patterson*, to deliver mail or stores.

On October 9, 1896, the *Patterson* left Sitka for San Francisco. On the evening of the same day the party located a rock off Point Caution, in Whitewater Bay Entrance. On October 10 the shoal in the north entrance of Wrangell Strait, where the *Topeka* struck in 1895, was successfully located. At the same time a party was sent to develop the reported shoal on which the steamer *Alki* struck in 1896. This shoal was found to have no existence, but the mud flat on the east side now extends farther into the channel, and the indications are that the channel has changed.

On October 13 the *Patterson* got under way again, and after stopping in Clover Passage to search for an island; at Departure Bay, British Columbia, to fill with water and coal; and at Victoria, British Columbia, arrived at San Francisco on the 23d of October, 1896.

The *Patterson* was under repairs, receiving a new upper deck, etc., from November 16, 1896, to January 18, 1897, during which time the officers and crew were quartered on shore, but there was no interruption to the office work. In this connection Lieutenant-Commander Moore desires to call special attention to the courtesies received from Lieut. Commander Frank Courtis, U. S. N., light-house inspector, who allowed him the use of the light-house wharf and storehouse on Yerba Buena Island for the storage of the equipment, etc., of the *Patterson*.

After refitting, etc., the *Patterson*, on April 3, 1897, sailed for southeast Alaska, and on October 9 arrived at the Puget Sound Naval Station, Bremerton, Wash., having touched at Port Townsend and Seattle en route. Lieutenant-Commander Moore made an inspection of the *Hassler*, *Earnest*, and *Fuca*. The *Hassler* was removed and overhauled, and the *Patterson* returned to Seattle to obtain 10 000 feet of lumber to fit out the two parties that were to occupy the tide and current stations at Seymour and Sergius Narrows.

On April 13 the Hydrographic Inspector arrived from the East and came on board to make the trip for the purpose of inspecting the coast of southeast Alaska, the work done, that to be done, and the manner of doing it.

The *Patterson* left Seattle on April 13, and after stopping at Victoria and Departure Bay, British Columbia, on April 15 anchored in Plumper Bay, Seymour Narrows.

After inspecting the Narrows, Lieutenant-Commander Moore decided to place the tide gauge and current station on the east side to the northward of Maude Island Passage. The party set up a tide staff, erected a frame house 12 by 12 feet with two rooms, and established Second-class Fireman Charles Nelson in charge, with Seaman Nils Olin as his assistant, with stores and supplies for six months, to observe tides and currents until the return of the ship in October. Specific instructions as to the frequency and manner of observations were given.

On April 19 the *Patterson* proceeded north after touching at various places, and stopped in Bear Bay, near Sergius Narrows. After inspecting the rapids the west side between Shoal and Sergius points was decided on to be the best place for the tide and current station. The same preparations as were made in Seymour Narrows were carried out at this station, and Seaman J. Beurman was left in charge, with Seaman Fred Gail as assistant, and given the same instructions as the party at Maude Island Passage.

On April 30 the *Patterson* arrived at Sitka and commenced tidal observations on Japonski wharf, occupied the previous season, thus forming a chain from Victoria, British Columbia, to Sitka, Alaska.

After an inspection of the various branches of the field work, the Hydrographic Inspector left the *Patterson* on May 6 and returned to Washington.

The season's work began May 1 and has continued the entire season. It began on the north side of Sitka Sound, where it was left off last season, continued down the Sound and connected with the work of the *Patterson* of 1893, thus completing the inside steamer route from the British Columbia line in Dixon's Entrance to Sitka, with all the arms, bays, and bights connected therewith.

The party also took up the work off the mouth of Salisbury Sound, where it was left off the previous season, and carried it about 15 miles to the northward and westward, off the coast of Chichagoff Island; and the survey to the southward on the sea side of Kruzoff Island is well advanced, insuring the completion of this work this season, and connecting Sitka Sound with Salisbury Sound, outside as well as inside. The hydrography is carried out to the 100-fathom curve and Lieutenant-Commander Moore mentions that it deepens more gradually outside than inside, except off the mouth of Sitka Sound, where there is a deep hole dropping from 70 fathoms to 500 fathoms in about 2 miles, 8 miles from Cape Edgecumbe; off Salisbury Sound and to the northward and westward the 100-fathom curve is from 12 to 15 miles off shore, and the coast is very treacherous. There are outlying sunken rocks and reefs, some as far as 3 miles offshore.

The general features of the inside waters and shores are the same as described heretofore.

At the close of the fiscal year the party had so far accomplished a remarkable amount of work, which is worthy of detailed statement, viz:

One base line had been measured.

Three hundred and eleven signals had been erected.

Two hundred and eighty-five stations had been occupied for horizontal angles.

Sixty-nine stations had been occupied for vertical angles.

Ninety-seven square miles of topography had been covered.

One hundred and fifty-one miles of shore line had been run in.

Two hydrographic sheets were finished, comprising 736 miles of soundings.

I desire to call your attention to the improvement of the Alaska work which has been brought about under the immediate direction of Lieutenant-Commander Moore. His unfailing good judgment of everything connected with the work, the party, and the ship under his command, has furnished the Survey with results that deserve special words of commendation. I regret in this connection that the reports of Lieutenant-Commander Moore have not been made available to the general public, and would recommend that the publication of future reports be made a matter of early consideration.

The steamer *Gedney* and party continued throughout the year under the command of Lieut. Commander A. P. Osborn, U. S. N., Assistant, and on July 18, 1896, resumed the survey of that portion of San Francisco Bay known as San Pablo Bay, where the work was steadily continued until November 17, when the vessel proceeded to Oakland Creek for repairs.

On December 7, 1896, repairs having been completed, the *Gedney* proceeded to Sausalito to await the arrival of Rear-Admiral J. G. Walker, U. S. N., chairman of the board to locate a deep-

water harbor in southern California. On December 19, in compliance with your instructions, the *Gedney* sailed to San Pedro, Cal., where, under the direction of the board, the party made hydrographic examinations of San Pedro and Santa Monica bays, and also of the inner harbor of San Pedro. On February 7, 1897, having finished the work for the board, the *Gedney* returned to San Francisco and resumed work in San Pablo Bay.

On May 11, 1897, the regular hydrographic work was discontinued in order to lay out a new 1-mile speed-trial course.

On June 15 the Honorable the Secretary of the Treasury placed the *Gedney* at the disposal of Dr. D. S. Jordan, president of the Leland Stanford University, for the purpose of an investigation of the seal rookeries on the island of Guadalupe, on the northwest coast of Mexico. The *Gedney*, with a party of scientists from Leland Stanford University, left San Francisco on June 15, arriving at Melpomene Cove, Guadalupe Island, on June 21. From June 21 to July 1, 1897, both ship and launch were engaged in carrying the naturalists to various points of the island and rendering them such assistance as they required in securing and preserving specimens.

During the stay at Guadalupe Island the latitude of a point on the south end of the island was determined by observations to be 28° 50′ 30″ north. Results of observations on the north end led Lieutenant-Commander Osborn to believe that the latitude and longitude given on British Admiralty chart No. 1936 is correct.

Having only one chronometer the party made no attempt to establish a close longitude.

The two latitudes make the length of the island about 20 miles.

During the various trips about the island a running survey was made.

A chart, of excellent execution, with data and method of work, has been received and upon your instruction forwarded to the Hydrographer, Navy Department, for use in the correction of charts issued by that office.

On July 1 the *Gedney* left Guadalupe Island for Sausalito, Cal., arriving on July 7, 1897.

The resurvey of San Pablo Bay, conducted by the party under the command of Lieutenant-Commander Osborn, is now nearly completed, and at the close of the fiscal year 24 square miles had been covered by over 900 miles of soundings run.

The work executed for the board to locate a deep-water harbor in southern California resulted in three hydrographic sheets of San Pedro Harbor and approaches, on various scales, and one hydrographic sheet of Santa Monica Bay, scale 1–10 000, and covers altogether 33 square miles.

The steamer *McArthur* was throughout the year engaged in the resurvey of San Francisco Bay, and part of the time in further development of Bonita Channel and Golden Gate. Lieut. James H. Sears, U. S. N., Assistant, remained in command until April 4, 1897, when he was relieved by Lieut. J. M. Helm, U. S. N., Assistant.

The finished sheets of this party comprise the entrance to San Francisco Bay and that part of the bay from the northern part of San Francisco and Alcatraz Island, on the west side, to Oakland and West Barclay on the east side of the bay.

The limits of the entrance sheet extend from outside the Heads, in a line extending between Franks Lagoon on the northwest and Cliff House on the southeast, to Fort Point on the inside. It includes the important Bonita, or North Channel, the Golden Gate, and Mile Rock Channel.

The difficulties in the hydrography were found in the irregular and strong currents, the lack of good ranges, the prevalent fogs, the high winds, and the tidal seas. No difficulty was met in the matter of signals. Throughout the area the bottom was found to be very irregular, both in depth and character. Every suspicious discrepancy in the soundings has been investigated, and it is believed that every feature has been completely covered. Lieutenant Sears discovered and fully located a number of dangerous rocks, of which immediate report and publication was made. The most important ones are Sears Rock, 18 feet, and Centissima Rock, 27 feet, in the fairway of Bonita Channel; the 10-foot rock, entrance to Rodeo Cove, and the 15-foot rock in the middle of Mile Rock Channel. A number of pinnacle rocks were located off Tennessee Cove, and north of it, and also near Point Bonita and Fort Point. Altogether over two dozen new rocks were located. For the first time the inshore hydrography was fully developed.

The descriptive report accompanying the entrance sheet is very comprehensive and contains much valuable information, especially in regard to currents.

The sheet covering part of the bay, as described above, includes Blossom Rock, the shore of Yerba Buena Island, the channel to the eastward, and the Berkeley Flats. The difficulties encountered were mainly those of weather, haze, and smoke. The currents were found to be extremely peculiar, and were observed to be running in opposite directions on either side of Yerba Buena Island at the same time, with varying strength.

The changes in hydrography, as shown by comparison with the published chart, appear to have been slight. Little change was noted in the 12 and 18 foot curves, but considerable change was found in the location of the 6-foot curve lying off the Berkeley shore, due without doubt to the influence of the extensive piers of the Southern Pacific Railroad Company. Lieutenant Sears had practically completed this part of the work, including the descriptive report accompanying the sheet, when Lieutenant Helm relieved him.

Since the middle of April the *McArthur's* party has been engaged in the hydrography of the eastern shore of San Francisco Bay, between Thompsons Landing and Potrero Point.

The party has also selected and located a large number of ranges in and about San Francisco, for use in determining compass deviations. These ranges will be put to a practical test, and it is the intention to put the more important and useful ones on the charts affected.

The total work of the fiscal year covered 27½ square nautical miles and represents 796 miles of soundings run and 56 518 soundings taken.

The present commanding officer of the *McArthur*, Lieut. J. M. Helm, U. S. N., is now serving his second tour on the Survey. As commanding officer of the same vessel and of the *Gedney* he has made an enviable reputation in this office.

Statement of Hydrographic Surveys executed during the fiscal year ending June 30, 1897.

Parties.		Localities.	Surveyed by—	No. of sheets.	Scale.	Number of—					Remarks.
Naval.	Civil.					Vols.	Angles.	Soundings.	Miles.	Square miles.	
1		Gloucester to Manchester, Massachusetts.	A. Dunlap, U. S. N.	1	10 000	18	12 593	23 877	834	15	Aug. 15 to Oct. 31, 1896.
2		South and Coast of Nantucket South Shoal Light Vessel, Massachusetts.	R. G. Peck, U. S. N.	.....	Various.	1	.....	64	70	.....	Test soundings, July 13, to Oct. 31, 1896.
2		Buzzards Bay, north of Cuttyhunk, Nashawena, and Naushon Island.	.....do.....	2	10 000	33	13 668	44 166	948½	21	
3		Buzzards Bay, Sippican and Pocasset Harbors; Wareham and Onset Harbors, Mattapoisett Harbor.	G. C. Hanus, U. S. N.	3	10 000	59	21 696	159 021	2 126	31	July 1 to Dec. 31, 1896.
3		Buzzards Bay, Mattapoisett Harbor, etc., season of 1897.	.....do.....	1	10 000	18	7 841	40 136	517½	7	May 18 to June 30, 1897.
4		Butlers Hole, Monomoy Passage, additional work.	J. J. Blandin, U. S. N.	.....	20 000	1	201	400	7½	1	
4		Nantucket Sound, additional work.	... .do.....	.....	20 000	5	1 745	8 693	203	11	
4		Tarpaulin Cove, Vineyard Sound.	.....do.....	1	10 000	2	430	1 489	17¼	1½	July 1 to Nov. 3, 1896; Lieut. W. S. Benson, U. S. N., to Aug. 15, Lieut. J. J. Blandin, U. S. N., from Aug. 15.
4		Rock near Sakonnt Point, Rhode Island, additional work.	.....do.....	.....	10 000	1	66	314	4½	.....	
4		Old Reef, 3 miles east of Watch Hill, Rhode Island, additional work.	.....do.....	.....	40 000	1	104	219	2	.....	
4		North of Gardiners Island, New York.	W. S. Benson, U. S. N.	1	10 000						
4		Off Montauk Point, and south of Block Island and Long Island.	W. S. Benson, U. S. N., and J. J. Blandin, U. S. N.	2	20 000 40 000	14	3 289	10 051	764½	373	
5		Elizabeth River, Virginia, South Branch, vicinity of Navy-Yard.	E. H. Tillman, U. S. N.	1	2 500	2	1 058	2 509	26	½	Aug. 11 to 25, 1896.

Statement of Hydrographic Surveys executed during the fiscal year ending June 30, 1897—Cont'd.

Parties.		Localities.	Surveyed by—	No. of sheets.	Scale.	Number of—					Remarks.
Naval.	Civil.					Vols.	Angles.	Soundings.	Miles.	Square miles.	
5		Channel off Navy-Yard, Washington, D. C.	E. H. Tillman, U. S. N.	1	1 200	1	112	363	3	.....	Mar. 13, 1897,
6		Chesapeake Bay, approaches to Baltimore Harbor.	A. Dunlap, U. S. N.	1	20 000	20	7 549	41 761	828	41	Nov. 16, 1896 to June 30, 1897.
7		Savannah River Entrance, Georgia.	J. J. Blandin, U. S. N.	1	20 000	13	4 526	27 572	518½	84	Jan. 25 to Apr. 29, 1897.
8		St. Simons Entrance, outer bar, Georgia.	R. G. Peck, U. S. N.	1	1 250	20	14 386	38 883	210½	½	Jan. 4 to Apr. 16, 1897.
	a	Lake Pontchartrain, Louisiana...	P. A. Welker.....	3	20 000	18	1 454	46 704	925	207	Feb., Mar., Apr. and May, 1897.
	b	Brazos River and Entrance, Texas.	H. L. Marindin..	1	5 000	4	2 472	6 610	87	4½	Jan. 4 to 27, 1897.
9		San Pedro Harbor and approaches, California.	A. P. Osborn, U. S. N.	3	Various.	7	1 578	4 680	127	6	Dec. 16, 1896 to Feb. 26, 1897.
9		Santa Monica Bay, California....	.....do.....	1	10 000	2	546	1 126	40	27	
9		San Pablo Bay, California.....	.....do.....	2	10 000	20	9 728	36 059	905	24	July 1, 1896, to Nov. 30, 1896; Mar. 15, 1897 to Mar. 31, 1897, Apr. 1, 1897 to May 10, 1897.
9		San Francisco Bay, California, Sheet No. 8.	.....do.....	1	10 000						
10		San Francisco Bay and entrance, California.	J. H. Sears, U. S. N., and J. M. Helm, U. S. N.	5	10 000	35	12 210	56 516	796	27½	July 1, 1896 to June 30, 1897.
11		Peril, Neva, and Olga Straits, Southeast Alaska.	E. K. Moore, U. S. N.	5	Various.	11	7 730	12 991	504	71	Aug. 2 to Oct. 6, 1896.
11		Examination in Wrangell Strait, etc., Southeast Alaska.	.....do.....	2	5 000	4	496	1 167	16¼	½	July 31 to Oct. 17, 1896.
12		Southeast Alaska, season of 1897 to June 30, 1897.	.....do.....	2	Various.	5	4 483	4 837	736	75	May 1 to June 30, 1897.
12	2										
14		Grand total for fiscal year ending June 30, 1897.		41	Various.	315	129 961	570 208	11 317½	1 029	

Number of specimens of bottoms, 252; current stations occupied by hydrographic parties, 27.

Party No. 2 engaged from July 6 to 10, 1896, in overhauling trial-course beacons in Long Island Sound, July 13 to 16, running test lines south of Nantucket Shoals.

Party No. 5 engaged principally in current observations in Chesapeake Bay, transporting civil party, and assisting on Chesapeake Bay trial course.

Party No. 6 established speed trial course in Chesapeake Bay March 17 to April 24, 1897, and attended speed trial of torpedo boat June 21 to 26, 1897.

Party No. 8 assigned to duty under the Honorable Secretary of War, under whose direction the survey of St. Simons Bar, Georgia, was carried out.

Party No. 9, work at San Pedro and Santa Monica, executed for Deep Harbor Commission southern coast of California.

Party No. 9 established new one-mile speed trial course in San Francisco Bay.

Party No. 9 took party of scientists to Guadalupe Island, Mexico, for investigation of Seal Rookeries June 15 to July 7, 1897.

Party No. 10 established ranges for compass corrections in San Francisco Bay.

Party No. 11 carried the Superintendent's party of inspection July 14 to August 2, 1896.

Civil party No. 6, special survey for Brazos River Commission.

HYDROGRAPHIC DIVISION.

During the year, Lieut. H. Rodman, U. S. N., Assistant, was in charge of the hydrographic division until ordered to sea April 28, 1897. Lieut. G. Tarbox, U. S. N., Assistant, then assumed charge, in addition to his duties with the coast pilot party, until his detachment June 15, 1897. Lieut. J. C. Gillmore, U. S. N., Assistant, reported for duty June 19, 1897, and was assigned to the charge of this division from that date.

The work of this division has been continued with ability and zeal, and I take pleasure in

calling your attention to the constant efforts of the officers in charge to improve the hydrographic features of the charts.

The office force has given entire satisfaction and the recommendation for increased compensation for Mr. E. H. Wyvill and Mr. J. T. Watkins is strongly urged.

COAST PILOT PARTY.

This party has been kept busily engaged in the continued correction and compilation of the Coast Pilot publications.

Lieut. G. Tarbox, U. S. N., Assistant, remained in charge until his detachment June 15, 1897, and carried on the work with zeal and with a constant effort to improve the work. He was ably assisted by Mr. John Ross. Since June 19, the party has been in charge of Lieut. J. C. Gillmore, U. S. N.

The main work of the party has been the preparation of manuscript for the first edition of the Coast Pilot, Part VIII, of the Gulf of Mexico, with supplement to other parts, the details of which are mentioned in the report annexed.

It is hoped that the publication of ranges on the Atlantic and Pacific coasts may prove of use to mariners to enable them to find the deviation of their compasses with little loss of time.

The present force of the coast pilot party is too small for the work and an additional nautical expert for the Alaska work is urgently needed.

REPAIRS AND MAINTENANCE OF VESSELS.

The following repairs were made to the different vessels during the fiscal year:

ATLANTIC COAST.

Steamer Bache.—Docking; iron bridge walls for boiler; copper tank for cabin water-closets; repairs to boilers; brass clock for engine room; two steel water tanks for berth deck; two steel water tanks for lower engine room; grate bars; door and front liners; grates; bonnets and plugs; repairs to boats; painting, and minor repairs. Total expenditure, $817·84.

Steamer Blake.—Repairs to ice boxes and new gratings for same; cabin and wardroom chairs; deck in pilot house; air ports; partitions in water-closets; cathead; renewing steam and exhaust pipe on capstan engine; metalling 15 doorsills in cabin and wardroom, and sheathing part of bulkhead in galley with brass; repiping radiators; galvanized-iron work; new thrust block; docking ship; new electric bells, wire, push buttons, buzzers, etc.; brass flanges for seacock; copper strainers, gate valve, brass nippers, etc.; two galvanized tanks and fittings; locker for tanks forward on spar deck; fitting new water-closets and pumps; new gaff; new topmast; wire screens for ship; new planemeter; new water tanks; fender for gangway; new flooring in storeroom and shaft alley; lockers in cabin and around pilot house; radiators for pilot house; new chains for catting anchor; oil tray for engine room; new tubes for boilers; repairs to main and capstan engine; tube stoppers and plungers for feed pump and fittings; guide brasses for air-pump plungers; repairing furnace fronts and doors; repiping circulating pump; forging bolts for foundation of thrust bearing; repairs to blow-off valve; liners for journal brasses; new thrust, shaft, and bearings; repairs to feed-pump gland main engine; lagging main-engine cylinders; finishing cylinder heads, and new nuts; renewing siphon piping, steam jackets, and indicator gear; repairs to boiler, engine, and hull of steam launch; repairs to boats; painting, and minor repairs to ship. Total expenditure, $2 868·13.

Schooner Eagre.—Three new boilers, and repairs to hull and machinery of steam launches; repairs to gangway ladder, galley range and cabin water-closet, deck, water line, centerboard and keel, water-tank beds; new straps for main boom, and cleats for masthead; manila for sheets, clew lines, deck tackles, and mooring lines, and blocks for same; painting ship, steam launches, and boats, and miscellaneous repairs. Total expenditure, $4 491.

Steamer Endeavor.—New steam heating apparatus, with donkey engine supplied; ship docked and cleaned; pilot house, closets, lamps, counter-gear and crank-pin brasses repaired; new speaking tube put in from engine room to pilot house; main boiler calked; pipes of heating plant covered with magnesia covering; new after coupling of thrust bearing supplied; automatic pump

added to heating plant; main deck calked; two large scuppers to relieve deck of water put in; new galley; large ice box for both forward and after messes supplied; also new stern bearing and three-fourth-inch chain for port anchor; new dingey, booby hatch, sounding grating, feed pipe, check valves, feed pump, bilge pipes, and engine, boiler; and hull of ship and steam launch and boats received such general repairs as were necessary for their preservation. Total expenditure, $2 446·86.

Schooner Matchless.—The repairs to this vessel consisted in supplying her with sail covers and a refrigerator at an expenditure of $117.

Schooner Quick.—New masts supplied; also new galley house; forward and cabin companion ways rebuilt; two pair steps of cypress put in; removed four pair brass skylight quadrants; took out ballast to clean vessel's hold; whitewashed same and returned ballast; new wire rigging, blocks, etc., supplied; vessel overhauled, repaired, metalled, and painted where necessary; and hull and engine of naphtha launch overhauled and repaired. Total expenditure, $1 075·30.

PACIFIC COAST.

Steamer Gedney.—New mainmast, new ash buckets, new hawse pipe and collar, new water tank and capstan supplied; six dead eyes, deadlight, hurricane deck, forecastle rail and deck, main engine, steam winch, main boiler and furnace repaired; steam launch supplied with new piston rod, canopy cover and tiller; and minor repairs to ship, launch, and boats. Total expenditure, $1 045·26.

Steamer McArthur.—New boat covers, launch canopy, rigging and fitting for square yard and sail, new square sail, jib and mainsail, drum and steel casing for launch supplied; vessel was docked and received general overhauling, consisting of new keelsons, repairs to hull and fastenings and including keelsons, repairs to spar deck, beams, and risings, wood floor under fire-room floor plates, and coal bulkheads; boiler removed to wharf, 99 brass tubes taken out and replaced by steel ones, tube sheet replaced, and boiler returned to ship and connected up; 1 section of line shaft 16 feet long connected up; crown sheet of boiler removed and replaced with new one; 1 set of piston rings, 2 globe valves, 1 set 30-inch grates (circular), 1 set 72-inch straight grates, 1 set fire-room floor plates, 2 cast furnace door frames, 1 water tank, 1 smoke stack for steam launch, 1 water distiller, 2 new anchor plates for bow of ship, and iron fittings for fore yard furnished; 15 studs in chain replaced and about 70 others straightened, and miscellaneous repairs made to ship, launches, and boats. Total expenditure, $3 989·96.

Steamer Patterson.—The extensive repairs begun during the previous fiscal year on this vessel were finished during the present. The upper deck, with all its planking, beams, carlings, coamings, skylights, pilot house, booby hatches, deck clamp, inside bulwarks, etc., were removed and replaced with new, using best Oregon pine. Everything was replaced as it was before, except that 11 additional beams were put in, more evenly spaced, the beams molded 5 inches amidships and tapered to 4 inches at the ends, instead of 4 inches all through, and sided 7 and 8 inches, instead of 6, 7, and 8 inches. The knees were fastened with through bolts and nuts, instead of drift bolts, all making the deck much stiffer and stronger. The fire-room hatch was made of three-sixteenths boiler steel instead of wood. The cabin-booby hatch was raised 15 inches, so as to enter without pushing the slide. The two gangway boobys were raised 24 inches. The pilot house was lengthened about 9 feet, extending from the fore hatch to the fire-room ventilators, over the old drafting-room skylight, which was decked over, making it 20 feet long by $9\frac{8}{12}$ feet wide on deck. A drafting room was made in the after end $10\frac{2}{12}$ feet long by $8\frac{6}{12}$ feet wide inside. The leaders for the wheel rope were changed to lignum-vitæ, fair leaders for the wire rope, and piping for manila, making a more direct lead and the wheel ropes always taut. A layer of heavy hair felt was put under the canvas. The starboard fire-room ventilator was renewed and the upper part of the port one renewed, while the lower part was repaired; both were lengthened to clear the top of the pilot house. A bulkhead was run through the middle of the old drafting room and the starboard side converted into a library and sick bay $11\frac{3}{12}$ feet long by $6\frac{3}{12}$ feet wide, while the port side was turned into a room for the two leading machinists and dispensary, the latter opening into the sick bay. The mizzenmast partners, the deck about them, and sides of beams next to them were found to be rotten. The beams were graved and partners and deck renewed. The

galley was worn out. It, with the brick and cement floor, was removed. The deck underneath was repaired and calked, a new brick and cement floor was laid, and a new 16-inch double-oven galley set up, with shelf and steam boiler. The scroll work, name, globe, and stars were regilded. A new fore yard, mizzen topmast, and main boom, and new main and mizzen crosstrees were supplied. The bulkheads and coamings of the main-deck hatch house were repaired. The main deck was calked from the ward-room bulkhead forward. The upper and lower seams of the outside bulwarks were calked. The paint was burned off between decks forward, and the whole ship painted. The coal-bunker bulkheads were repaired around the bottom, where they had rotted away. The standing and running rigging were all overhauled. Steam launches and boats were thoroughly overhauled and repaired, and a flat-bottom skiff supplied. Boilers and engine overhauled and repaired; also pumps, pipes, and secondary engines. Lagging on upper part of main boiler was covered with galvanized iron under the hatch to protect it from the weather. Total expenditure, $7 016·75.

Such repairs as tended to their preservation were made to the *Spy*, *Transit*, *Hassler*, *Cosmos*, the launch *Fuca*, and other launches.

List of naval officers attached to the United States Coast and Geodetic Survey during the fiscal year ending June 30, 1897.

Name.	Date attached.	Date detached.	Remarks.
LIEUTENANT-COMMANDERS.			
A. Dunlap	May 26, 1896	.....	Still in service.
H. G. O. Colby	Apr. 30, 1896	Dec. 23, 1896	
E. D. Taussig	Dec. 23, 1896	.....	Still in service.
W. J. Barnette	Apr. 2, 1897	.....	Still in service.
C. T. Forse	June 18, 1897	.....	Still in service.
E. K. Moore	Jan. 12, 1897	.....	Still in service.
A. P. Osborn	July 20, 1895	.....	Still in service.
LIEUTENANTS.			
Robert G. Peck	June 1, 1893	.....	Still in service.
G. C. Hanus	Feb. 7, 1895	.....	Still in service.
J. M. Helm	Mar. 22, 1897	.....	Still in service.
J. A. Shearman	Jan. 8, 1894	Jan. 8, 1897	
James H. Sears	Mar. 31, 1894	Apr. 1, 1897	
J. C. Gillmore	June 19, 1897	.....	Still in service.
W. S. Benson	May 6, 1896	Aug. 15, 1896	
A. G. Rogers	Nov. 15, 1894	July 1, 1896	
J. J. Knapp	July 1, 1896	.....	Still in service.
E. H. Tillman	July 19, 1894	.....	Still in service.
R. F. Lopez	July 20, 1893	Nov. 20, 1896	
LIEUTENANTS (JUNIOR GRADE).			
Hugh Rodman	Dec. 20, 1895	Apr. 28, 1897	
J. J. Blandin	Oct. 21, 1893	June 18, 1897	
W. B. Hoggatt	Jan. 17, 1894	.....	Still in service.
J. H. Seymour	Sept. 5, 1896	Dec. 7, 1896	
G. R. Slocum	Dec. 3, 1896	.....	Still in service.
G. Tarbox	Oct. 19, 1895	June 15, 1897	
W. W. Gilmer	Dec. 19, 1895	.....	Still in service.
W. A. Edgar	Oct. 18, 1894	.....	Still in service.
W. H. Faust	Apr. 7, 1896	.....	Still in service.
H. H. Hines	Oct. 27, 1894	.....	Still in service.
N. A. McCully	Nov. 26, 1894	.....	Still in service.
ENSIGNS.			
Andrew T. Long	Apr. 23, 1895	Nov. 18, 1896	
C. M. Stone	Feb. 20, 1895	.....	Still in service.
Thomas Washington	Mar. 30, 1897	.....	Still in service.
A. H. Davis	Jan. 7, 1895	.....	Still in service.
F. M. Russell	Jan. 7, 1895	.....	Still in service.
John F. Hubbard	Oct. 13, 1895	Apr. 20, 1897	
M. L. Miller	May 19, 1896	.....	Still in service.
Jas. H. Reid	Dec. 9, 1895	.....	Still in service.
H. A. Wiley	Jan. 1, 1896	.....	Still in service.
G. B. Bradshaw	Feb. 11, 1896	Dec. 3, 1896	
C. A. Brand	Aug. 17, 1896	.....	Still in service.

List of naval officers attached to the United States Coast and Geodetic Survey, etc.—Continued.

Name.	Date attached.	Date detached.	Remarks.
ENSIGNS—continued.			
P. Williams	Nov. 18, 1896		Still in service.
F. B. Sullivan	Dec. 18, 1896		Still in service.
P. Symington	May 7, 1897		Still in service.
PASSED ASSISTANT SURGEONS.			
G. Rothganger	Nov. 28, 1896	Dec. 25, 1896	
R. M. Kennedy	Sept. 26, 1894	Nov. 28, 1896	
Charles M. De Valin	June 29, 1896	Dec. 3, 1896	
H. D. Wilson	Oct. 10, 1896	Dec. 7, 1896	
ASSISTANT SURGEONS.			
M. K. Johnson	Aug. 16, 1896	Oct. 10, 1896	
PASSED ASSISTANT PAYMASTERS.			
John Q. Lovell	Mar. 2, 1895		Still in service.

RECAPITULATION.

Lieutenant-commanders	7
Lieutenants	11
Lieutenants (junior grade)	11
Ensigns	14
Passed assistant surgeons	4
Assistant surgeons	1
Passed assistant paymasters	1
	49

NOTE.—From the statement immediately following it appears that, of the 49 officers above named, 31 were on duty on the Survey at the close of the fiscal year.

List of naval officers attached to the United States Coast and Geodetic Survey June 30, 1897.

Coast and Geodetic Survey Office.—Lieut. Commander E. D. Taussig, Hydrographic Inspector; Lieut. J. C. Gillmore, chief of hydrographic division; Passed Assistant Paymaster John Q. Lovell, in charge navy pay accounts.

Steamer Blake (Atlantic Coast).—Lieut. Commander A. Dunlap, commanding; Ensigns James H. Ried and F. B. Sullivan.

Steamer Bache (Atlantic Coast).—Lieut. Commander W. J. Barnette, commanding; Lieuts. Robert G. Peck and H. H. Hines; Ensigns A. H. Davis and F. M. Russell.

Steamer Endeavor (Atlantic Coast).—Lieut. Commander C. T. Forse, commanding; Ensigns C. A. Brand and P. Williams.

Schooner Eagre (Atlantic Coast).—Lieut. G. C. Hanus, commanding; Lieut. W. A. Edgar; Ensign H. A. Wiley.

Schooner Matchless (Atlantic Coast).—Lieut. E. H. Tillman, commanding.

Steamer Patterson (Pacific Coast).—Lieut. Commander E. H. Moon, commanding; Lieuts. J. J. Knapp, W. B. Hoggart, G. R. Slocum, and W. W. Gilmer; Ensign Thomas Washington.

Steamer Gedney (Pacific Coast).—Lieut. Commander A. P. Osborn, commanding; Lieut. W. H. Faust; Ensigns C. M. Stone and P. Symington.

Steamer McArthur (Pacific Coast).—Lieut. J. M. Helm, commanding; Lieut. N. A. McCully; Ensign M. L. Miller.

CONCLUDING REMARKS.

In conclusion, I beg to call your attention to the necessity of a change in the form of appropriation for the prosecution of the hydrographic work and of all surveying work under charge of naval parties.

The present form of appropriation, giving a few hundred or a few thousand dollars for this section and another allotment for another section of the coast, does not bring the same results from the expenditure of the money as if the appropriations for the hydrographic work were made in one sum.

The hydrographic surveys and resurveys of the extensive coast of the United States, including Alaska, will never be finished. The repairs and outfits and other expenses of the vessels must be maintained throughout the fiscal year, and all should be lumped in one appropriation to obtain the best results.

Under the present form of appropriation in many cases work of importance in one section of a coast is dropped, to be continued at additional expense at some future day, because there is no money to buy possibly 50 tons or less of coal. In every other respect the vessel may be fitted out to continue the work, but the lack of a few hundred dollars makes it imperative to send the vessel to another section where the appropriation may be available, or, if too late in the season, the vessel may be laid up or refit when she could work advantageously.

The call for a survey of the mouths of the Yukon River is growing imperative. The unusual character of the work makes it necessary that a vessel especially built for this purpose be available, and that many unusual expenses, such as extra pay, subsistence, food, winter quarters, dogs, sleds, etc., be provided.

If the survey of the mouths of the Yukon is to be begun this spring, an appropriation of $100 000, to be immediately available, should be made by January. If the appropriation is not available at once, little or no work will be done on the Yukon during 1898.

The growing importance of Alaska, the large number of lives and the great amount of property that are carried through Alaskan waters, seem to warrant immediate action.

Lieut. Commander H. G. O. Colby, U. S. N., was relieved as Hydrographic Inspector by Lieut. Commander E. D. Taussig, U. S. N., on December 23, 1896.

The Hydrographic Inspector has endeavored to inspect all the vessels on the working ground, with a view of securing more uniform work and to enable him to recommend with greater intelligence the allotments for repairs and party expenses.

All hydrographic parties were found engaged zealously in prosecuting the work assigned them.

It is recommended that the classification of the clerk assigned to the Hydrographic Inspector be advanced, as the duties require a knowledge of the forms of both the Treasury and Navy Departments. Mr. J. H. Roeth has during the past year, as heretofore, performed these duties to the satisfaction of the Hydrographic Inspector.

The reports of the chiefs of the hydrographic and coast pilot divisions are herewith forwarded.

Very respectfully,

E. D. TAUSSIG,
Lieutenant-Commander, U. S. N.,
Hydrographic Inspector, Coast and Geodetic Survey.

Gen. W. W. DUFFIELD,
Superintendent United States Coast and Geodetic Survey.

REPORT OF THE HYDROGRAPHIC DIVISION FOR THE FISCAL YEAR ENDING JUNE 30, 1897.

UNITED STATES COAST AND GEODETIC SURVEY,
Washington, D. C., June 30, 1897.

SIR: I have the honor to submit the following report of the work done by the hydrographic division for the fiscal year ending June 30, 1897:

Lieut. Hugh Rodman, U. S. N., was in charge until April 28, 1897, after which Lieut. Glennie Tarbox, U. S. N., assumed charge until his detachment June 15, 1897. I took charge on reporting for duty June 19, 1897.

The routine and methods of previous years have been followed out. The following brief synopsis will show the work done by the division:

Number of drawings and proofs of charts verified	277
Number of volumes plotted	308
Number of angles plotted	123 202
Number of soundings plotted	436 435
Number of miles plotted	9 244
Number of sheets plotted	45
Number of miscellaneous drawings and tracings	149
Number of charts corrected	5 679

Besides the above a large amount of miscellaneous work has been done, including revision and verification of proofs, charts, and drawings; tracings and projections made and verified; tidal data reduced and plotted; comparisons of hydrography and topography, and other work. The monthly Notices to Mariners have been kept up and promptly published.

It gives me great pleasure to substantiate the report of the previous fiscal year as to the zeal and efficiency of all employees of this division, and it is owing to this zeal and efficiency that the division has kept the work up to date.

The force employed in the division during the year has been composed of Messrs. W. C. Willenbucher, F. C. Donn, and J. T. Watkins, draftsmen, and Mr. E. H. Wyvill, chart corrector.

Mr. Willenbucher, as chief draftsman of the division, has very great and varied duties, all being performed with promptness, accuracy, and ability. Mr. Donn and Mr. Watkins have executed the work falling to them with efficiency and faithfulness.

The position Mr. Wyvill fills calls for great skill as a draftsman, knowledge of nautical and navigational matters, and chart making and its precedents, both in and out of the office, knowledge of the methods employed in the different kinds of work in the field, and great care and vigilance. Only long experience and constant application could enable one to do the work of the office as he has performed it. He deserves great praise, and, what is more practical, more pay. As his duties are more important than those falling to the other correctors in the office, I would earnestly recommend that a special rating, as recommended in the last report, carrying with it commensurate pay, be created for him, or if this can not be done, that he be promoted to the first vacant clerkship.

For the same reasons as given in last report, I would earnestly urge that the salary of Mr. Watkins be increased to $1 200.

Very respectfully,

J. C. GILLMORE,
Lieutenant, U. S. N., Chief of Hydrographic Division.

Lieut. Commander E. D. TAUSSIG, U. S. N.,
Hydrographic Inspector, Coast and Geodetic Survey.

REPORT OF THE COAST PILOT PARTY FOR THE FISCAL YEAR ENDING JUNE 30, 1897.

UNITED STATES COAST AND GEODETIC SURVEY,
Washington, D. C., June 30, 1897.

SIR: I have the honor to submit the following report of the coast pilot party for the fiscal year ending June 30, 1897:

Under the general direction of the Superintendent and the supervision of the Hydrographic Inspector, the duties of this party involve the execution of work in the field and in the office.

At the beginning of the fiscal year the party was engaged in the preparation of manuscript for the first edition of United States Coast Pilot, Atlantic Coast, Part VIII, Gulf of Mexico from Key West to the Rio Grande. This consisted mainly of incorporating the information obtained in the field between February 1 and May 21, 1897, with that obtained by correspondence and from other sources. While engaged in this work it was found that an edition of 1 000 copies of a supplement to the Coast Pilot, containing the Rules of the Road at Sea, etc., had been exhausted, and the manuscript for a second edition of this supplement, with some additions, was prepared and sent to the printer. An edition of 500 copies was printed, this number being sufficient to supply the demand before the new Rules of the Road go into effect.

On December 9, 1896, the manuscript for Coast Pilot, Part VIII, was sent to the printer, and the work of preparing supplements, containing all the important changes in Coasts Pilots, Parts IV and V, since the date of their publication, was begun. From December 21, 1896, to February 6, 1897, the party was engaged reading proof for Coast Pilot, Part VIII, and for supplements to Parts IV and V. On April 2 Part VIII was ready for issue, having been in the printer's hands three and one-fourth months. This shows that there is no real cause why a volume of the Coast Pilot should remain in the printer's hands nine months, and even longer, which has been the case with some of the previous volumes, the record being fourteen and one-half months.

Since February 6 much of the material for a second edition of United States Coast Pilot, Atlantic Coast, Part VI, Chesapeake Bay and Tributaries, has been collected, and while waiting an opportunity to verify the material and collect later information in the field the manuscript for a supplement to include the more important changes which have taken place since the publication of the first edition of this volume (1889) has been prepared and sent to the printer. The manuscript for a supplement, containing the new Rules of the Road, has also been prepared and sent to the printer.

The office having arranged to establish ranges on the Atlantic and Pacific coasts of the United States by which mariners may find the deviations of their compasses, the coast pilot party has been charged with the selection and establishment of the ranges, when possible, and their publication after their magnetic bearings have been determined.

The usual routine work of the party, keeping detailed records of all changes, reported dangers, hydrographic examinations, new information available, and other data which may be used in the compilation or correction of Coast Pilot volumes, requires considerable time and constant attention.

In the general scheme for a Coast Pilot for the Atlantic Coast, formulated by Lieut. G. H. Peters, U. S. N., in 1896 and developed during the years 1886–1888, with the approval of the Hydrographic Inspector and of the Superintendent, the coast was laid off in parts, as was thought most convenient for the mariner, and with the design of eventually incorporating the several parts (abridged, if necessary) in one volume. This plan has been followed, so that the eight parts which are now issued, and which cover the Atlantic Coast of the United States from the St. Croix River to the Rio Grande, are all alike in construction and scope of subject-matter.

Since 1893 all volumes of the United States Coast Pilot, Atlantic Coast, issued from this office have been corrected to date of issue, for all important changes that have taken place since their publication and which affect the text. Owing to the constantly increasing demand (about 850 volumes in 1896, and which has reached 654 volumes during the six months ending June 30, 1897), the work of keeping the volumes corrected requires much time and labor. It has been found that after a volume has been in print four years the corrections become so numerous, due to changes in hydrography, topography, and aids to navigation, that the volume loses both in appearance and usefulness. To partly overcome this, editions of 600 copies are now printed, but some of the first parts issued (notably Part VI, published in 1889, and of which more than 1 500 copies were printed) have now so many corrections, that for purposes of navigation their usefulness is much impaired; the general information, however, is still of value to a stranger.

With regard to the combination of all parts in one volume, I would say that past experience has shown that this part of the original scheme has become impracticable, on account of the later decision to keep the volumes corrected to date. With the volumes now in print as a guide, it is safe to say that two years after a Coast Pilot of the Atlantic Coast in one volume was printed, there would be 35 to 40 pages of closely typewritten matter, or a supplement of 25 to 30 pages, to be inserted as corrections. In view of the above, I think it unadvisable to combine the parts as long as they are to be kept corrected to date.

The value of a Coast Pilot depends upon its accuracy, and the latter depends on the information contained being up to date. To maintain the standard of the Coast Pilot for accuracy, it is necessary to verify all information already collected, whatever its source, and to gather additional information (that can be gotten only in this way) in the field. The compilation of a new edition of any volume without its verification in the field would detract greatly from the usefulness of the work.

Respectfully,

GLENNIE TARBOX,
Lieutenant, U. S. N., Chief of Coast Pilot Party.

Lieut.-Commander E. D. TAUSSIG, U. S. N.,
Hydrographic Inspector, Coast and Geodetic Survey.

OFFICE REPORT NO. 3—1897.

REPORT OF THE DISBURSING AGENT FOR THE FISCAL YEAR ENDING JUNE 30, 1897.

UNITED STATES COAST AND GEODETIC SURVEY,
OFFICE OF THE DISBURSING AGENT,
Washington, D. C., June 30, 1897.

SIR: I have the honor to submit the following report of the disbursing office for the fiscal year ended June 30, 1897:

The total disbursements on adjusted accounts were $387 371·75, made from total appropriations of $401 370. Some further payments will be made, as a result of contracts entered into during the year and not yet completed.

The aggregate of advances made to chiefs of field parties during the year was $114 787·29. The number of bills, vouchers, etc., adjusted and paid during the year was 15 423.

Additional statistics of the work accomplished during the last year will be found on file in this office.

The annual report of the expenditures of the United States Coast and Geodetic Survey for the fiscal year just ended is being compiled, and will be submitted for transmission to Congress as soon as completed, which will be within this calendar year.

The settlement and payment of all proper accounts in this office during the year has been as speedy as was consistent with a careful examination and auditing of the same.

The accounts audited and paid in this office have been at once forwarded to the Auditor for the Treasury Department for his action, and it gives me pleasure to report his unvarying promptness in settling the same.

The force of this office for the fiscal year has been as follows: Mr. N. G. Henry, confidential clerk and cashier; Miss Ida M. Peck, typewriter and clerk; Mrs. Jennie H. Fitch, clerk.

Respectfully, yours,

SCOTT NESBIT, *Disbursing Agent.*

Gen. W. W. DUFFIELD,
Superintendent United States Coast and Geodetic Survey.

EXPENDITURES, COAST AND GEODETIC SURVEY, 1897.

UNITED STATES COAST AND GEODETIC SURVEY,
OFFICE OF THE DISBURSING AGENT,
Washington, D. C., January 1, 1898.

SIR: I have the honor to transmit herewith the annual report of expenditures made by this office for the fiscal year ending June 30, 1897.

Respectfully, yours,

SCOTT NESBIT,
Disbursing Agent.

Dr. HENRY S. PRITCHETT,
Superintendent United States Coast and Geodetic Survey.

Statement of the expenditures of the United States Coast and Geodetic Survey for the fiscal year ending June 30, 1897.

[Prepared pursuant to act approved March 3, 1853.]

SALARIES—PAY OF FIELD OFFICERS.

To whom paid.	Time employed.	Amount.
SUPERINTENDENT.		
W. W. Duffield	One year	$5 000·00
ASSISTANTS.		
Charles A. Schott	One year	4 000·00
Aug. F. Rodgers	do	4 000·00
Otto H. Tittmann	do	3 200·00
Andrew Braid	do	3 000·00
A. T. Mosman	do	3 000·00
Herbert G. Ogden	do	3 000·00
Will Ward Duffield	do	3 000·00
Erasmus D. Preston	do	2 500·00
Cephas H. Sinclair	do	2 500·00
William Eimbeck	do	2 500·00
Frank D. Granger	do	2 500·00
Frank Walley Perkins	do	1 586·88
J. J. Gilbert	do	2 200·00
Henry L. Marindin	do	2 200·00
John F. Pratt	do	2 200·00
Edmund F. Dickins	do	2 200·00
Dallas B. Wainwright	do	2 200·00
Isaac Winston	do	2 200·00
William C. Hodgkins	do	2 000·00
Philip A. Welker	do	2 000·00
James B. Baylor	do	2 000·00
John A. Flemer	do	2 000·00
Stehman Forney	do	2 000·00
John Nelson	do	2 000·00
Fremont Morse	do	1 996·17
Gershom Bradford	do	1 800·00
Walter B. Fairfield	do	1 800·00
W. Irving Vinal	do	1 793·50
Charles T. Iardella	do	1 556·52
George R. Putnam	do	1 591·84
Henry L. Whiting	Seven months and four days	955·58
Fred. A. Young	One year	1 462·30
E. B. Latham	do	1 400·00
Albert L. Baldwin	do	1 387·53
Homer P. Ritter	do	1 264·48
Robert L. Faris	do	1 200·00
George L. Flower	Eleven months and ten days	1 131·51
Owen B. French	Eleven months	1 094·81
Charles C. Yates	Three months and twenty-three days	380·00
AIDS.		
Owen B. French	One month	75·80
Hugh C. Dendon	One year	895·11
Charles C. Yates	Eight months and eight days	615·00
Albert F. Zust	One year	900·00
R. B. Derickson	Seven months and thirteen days	557·59
William Bowie	Three months and twenty-three days	285·00
Expenditures		89 129·62
Appropriation		90 400·00
Expenditures		89 129·62
Unexpended balance		1 270·38

Statement of the expenditures of the United States Coast and Geodetic Survey, etc.—Continued.

SALARIES—PAY OF OFFICE FORCE, 1897.

To whom paid.	Time employed.	Amount.
DISBURSING AGENTS.		
Robert J. Griffin	Eight months and twenty-three days	$1 583·23
Scott Nesbit	Three months and eight days	598·84
GENERAL OFFICE ASSISTANT.		
Walter P. Ramsey	One year	1 800·00
CHIEF OF DIVISION OF LIBRARY AND ARCHIVES.		
H. Sidney King	One year	1 800·00
CLERKS TO SUPERINTENDENT.		
George L. Flower	Twenty-one days	68·48
A. H. Bailey	Eleven months and ten days	1 131·51
CLERK TO ASSISTANT IN CHARGE.		
Adelbert B. Simons	One year	1 000·00
CLERKS.		
William B. Chilton	One year	1 647·76
Nicholas G. Henry	do	1 650·00
John H. Smoot	do	1 400·00
William C. Maupin	do	1 400·00
Artemas Martin	do	1 400·00
Eugene B. Wills	do	1 200·00
Freeman R. Green	do	1 200·00
Frank W. Edmonds	do	1 200·00
J. Henry Roeth	do	1 200·00
Asa G. Randall	do	1 196·74
Sophie S. Hein	do	1 000·00
Jennie H. Fitch	do	1 000·00
Alice G. Reville	do	1 000·00
CHART CORRECTORS.		
Edward H. Wyvill	One year	1 200·00
Ida M. Peck	do	1 200·00
Henry R. Garland	do	900·00
Archie Upperman	do	720·00
Mary L. Handlan	do	720·00
WRITERS.		
Lily A. Mapes	One year	900·00
Virginia Harrison	do	900·22
Kate Lawn	do	800·00
Deane S. Bliss	do	710·22
Marie L. Fout	do	720·00
Hetty S. Graves	Seven months	452·00
Edw. F. Lopez	One year	720·00
A. H. Bailey	Twenty-one days	41·09
Joseph M. Morgan	Three months	230·92
James M. Griffin	Five months and twenty-three days	316·00
Fannie I. Matthews	Four months and nine days	260·00
Daniel Hurley	Four months and eleven days	211·11
Buford Lynch	Seven months and ten days	358·54
DRAFTSMEN.		
Edwin H. Fowler	One year	2 033·00
Henry Lindenkohl	do	2 200·00
Adolph Lindenkohl	do	2 367·00
William C. Willenbucher	do	2 000·00
Ferdinand Westdahl	do	1 800·00
Ernest J. Sommer	do	1 800·00
Frank C. Donn	do	1 800·00
David M. Hildreth	do	1 400·00
Charles H. Deetz	do	1 400·00
Edmund P. Ellis	do	1 200·00
Charles Mahon	do	1 000·00
Paul Erichsen	do	1 000·00

Statement of the expenditures of the United States Coast and Geodetic Survey, etc.—Continued.

SALARIES—PAY OF OFFICE FORCE, 1897.

To whom paid.	Time employed.	Amount.
DRAFTSMEN—continued.		
John T. Watkins	One year	$900·00
Claude V. Martin	Three months and fourteen days	259·24
Harlow Bacon	Five months and sixteen days	412·50
COMPUTERS.		
Edward H. Courtenay	One year	2 000·00
Myrick H. Doolittle	do	2 000·00
John B. Boutelle	do	1 600·00
Leland P. Shidy	do	1 600·00
Frank M. Little	do	1 600·00
Daniel L. Hazard	do	1 398·10
Rollin A. Harris	do	1 400·00
Charles H. Kummell	Nine months and seventeen days	956·04
Harry F. Flynn	One year	1 200·00
Lilian Pike	do	1 005·52
Francis W. Clay	do	989·13
COPPERPLATE ENGRAVERS.		
William A. Thompson	One year	2 000·00
Henry M. Knight	do	2 000·00
William H. Davis	do	1 800·00
Edward H. Sipe	do	1 800·00
William F. Peabody	do	1 597·83
Henry L. Thompson	do	1 600·00
William A. Van Doren	do	1 389·71
Alfred H. Sefton	do	1 198·37
Peter H. Geddes	do	1 168·41
Harry R. McCabe	do	993·24
William McKenzie	do	979·59
George Hergesheimer	do	900·00
Frank G. Wurdemann	do	900·00
William H. Holmes	Nine months and fourteen days	711·68
Hugo Franke	Seven months and twenty-seven days	591·83
Rowland H. Ford	One year	494·85
ELECTROTYPER AND PHOTOGRAPHER.		
Louis P. Keyser	One year	1 800·00
ASSISTANT ELECTROTYPER AND PHOTOGRAPHER.		
Roy Thomas	One year	700·00
PLATE PRINTERS.		
D. N. Hoover	One year	1 600·00
Charles J. Harlow	do	1 000·00
Eberhard Fordan	do	1 000·00
Neil Bryant	do	1 000·00
George B. Crawford	Ten months and eight days	853·40
James L. Smith	One year	1 000·00
Frank C. Gohre	Twenty-six days	71·70
PLATE PRINTERS' HELPERS.		
Charles F. Locraft	One year	700·00
Louis L. Williams	do	662·91
Paul Dexter	do	698·10
Frank C. Gohre	Eleven months and four days	628·03
William M. Conn	One year	658·15
Charles Buckingham	do	700·00
INSTRUMENT MAKERS.		
Ernest G. Fischer	One year	1 800·00
Clement Jacomini	do	1 200·00
William R. Whitman	do	1 000·00
Stephen A. Kearney	Nine months	750·00
Clarence E. Regennas	Nine months and twenty-six days	821·43
M. Lauxmann	One year	923·92
Joseph A. Clark	Two months and nineteen days	197·78
Thos. A. Gibson	One month and fifteen days	111·29

Statement of the expenditures of the United States Coast and Geodetic Survey, etc.—Continued.

SALARIES—PAY OF OFFICE FORCE, 1897.

To whom paid.	Time employed.	Amount.
CARPENTERS.		
Horace O. French	One year	$1 200·00
George W. Clarvoe	do	1 000·00
Charles N. Darnall	do	917·86
ENGINEER.		
P. J. Mullen	One year	1 000·00
WATCHMEN.		
David Parker	One year	880·00
John W. Drum	do	880·00
J. A. Dorsey	do	820·00
FIREMAN.		
Horace Dyer	One year	630·00
MESSENGERS.		
Edw. D. Scott	One year	880·00
Charles Over	do	820·00
Charles H. Jones	do	820·00
William R. McLane	do	820·00
Vicente Denis	do	820·00
Thomas McGoines	do	820·00
John W. Reed	do	700·00
George Newman	do	700·00
John W. Miner	do	640·00
John W. Hunter	do	640·00
William H. Butler	do	640·00
Dennis E. White	Nine months and eleven days	429·12
Owen E. McNeille	One year	550·00
PACKER AND FOLDER.		
Attrell Richardson	One year	630·00
LABORERS.		
J. H. Brown	One year	630·00
Baylor Crutchfield	Ten months and twenty-one days	560·75
Frank Thomas	One month and four days	60·55
Hans Bowdwin	One year	550·00
Boston Brown	do	550·00
Jos. A. Williamson	One month and twenty-six days	86·10
John H. Mason	One year	365·00
Virginia McGlincy	do	365·00
Expenditures		133 563·57
Appropriation		135 170·00
Expenditures		133 563·57
Unexpended balance		1 606·43

RECAPITULATION.

Pay of field officers	89 129·62
Pay of office force	133 563·57
Expenditures	222 693·19
Total sum appropriated for salaries	225 570·00
Total sum expended for salaries	222 693·19
Unexpended balance	2 876·81

Statement of the expenditures of the United States Coast and Geodetic Survey, etc.—Continued.

PARTY EXPENSES, 1897.

ATLANTIC COAST.

To whom paid.	On what account.	Amount.
Adams Express Co	Transportation	$3·60
J. B. Baylor	do	584·51
A. Dunlap, U. S. N	Hydrography, steamer Blake	5 567·75
J. A. Flemer	Triangulation and topography	2 203·35
H. F. Flynn	Traveling expenses	31·06
Stehman Forney	Triangulation and topography	3 112·79
George W. Knox Express Co	Transportation	3·08
G. C. Hanus, U. S. N	Hydrography, schooner Eagre	3 064·85
W. C. Hodgkins	Topography	701·09
C. T. Iardella	do	1 752·24
H. G. Ogden	Triangulation	2 326·02
Robert G. Peck, U. S. N	Hydrography, steamer Bache	2 561·47
Philadelphia, Wilmington and Baltimore R. R. Co.	Transportation	1·21
Stephenson's Express	do	1·49
E. H. Tillman, U. S. N	Hydrography, schooner Matchless	990·16
U. S. Revenue-Cutter Service	Flags and bunting	126·17
W. Irving Vinal	Topography	1 614·22
D. B. Wainwright	Triagulation and topography	2 184·80
J. T. Watkins	Traveling expenses	32·70
Expenditures		26 862·56
Appropriation		25 000·00
Add 10 per cent from Pacific coast		2 000·00
		27 000·00
Expenditures		26 862·56
Unexpended balance		137·44

GULF COAST, ETC.

To whom paid.	On what account.		Amount.
Charles Alexander	Stores for schooner Transit		$194·70
W. B. Fairfield	Triangulation		1 520·01
A. Gerdes & Bro	Stores for schooner Quick		253·23
F. Walley Perkins	Storage		42·00
U. S. Revenue-Cutter Service	Flags		2·86
P. A. Welker	Combined operations		4 074·31
Amount disbursed			6 087·11
Railroad accounts referred for settlement			43·00
Expenditures			6 130·11
Appropriation			7 800·00
Less 5 per cent transferred to leveling		$390·00	
Expenditures		6 130·11	
			6 520·11
Unexpended balance			1 279·89

Statement of the expenditures of the United States Coast and Geodetic Survey, etc.—Continued.

PARTY EXPENSES—Continued.

OFFSHORE WORK, ETC.

To whom paid.	On what account.	Amount.
W. S. Benson, U. S. N.	Hydrography, steamer Endeavor	$259.46
J. J. Blandin, U. S. N.	do	3 342.88
C. T. Forse, U. S. N.	do	585.35
Robert G. Peck, U. S. N.	Hydrography, steamer Bache	1 265.67
U. S. Revenue-Cutter Service	Flags	14.75
Expenditures		5 468.11
Appropriation		5 000.00
Add 10 per cent from tides, etc.		500.00
		5 500.00
Expenditures		5 468.11
Unexpended balance		31.89

PACIFIC COAST.

To whom paid.	On what account.		Amount.
E. F. Dickins	Triangulation		$2 910.06
J. J. Gilbert	Triangulation and topography		859.58
J. M. Helm, U. S. N.	Hydrography, steamer McArthur		1 762.19
A. P. Osborn, U. S. N.	Hydrography, steamer Gedney		4 295.42
J. F. Pratt	Storage		42.00
Aug. F. Rodgers	Triangulation and topography		3 273.98
James H. Sears, U. S. N.	Hydrography, steamer McArthur		3 688.29
U. S. Revenue-Cutter Service	Flags and bunting		28.52
Amount disbursed			16 860.04
Railroad accounts referred for settlement			83.78
Expenditures			16 943.82
Appropriation			20 000.00
Less 10 per cent transferred to Atlantic coast		$2 000.00	
Expenditures		16 943.82	
			18 943.82
Unexpended balance			1 056.18

ALASKA.

To whom paid.	On what account.		Amount.
Adams Express Co	Transportation		$7.98
Bureau of Equipment, Navy Department.	Stores for steamer Patterson		29.88
Will Ward Duffield	Combined operations		2 293.82
W. W. Duffield	Commutation		105.00
E. K. Moore, U. S. N.	Hydrography, steamer Patterson		10 022.78
Fremont Morse	Longitudes		877.42
U. S. Revenue-Cutter Service	Flags		12.50
Amount disbursed			13 349.38
Railroad accounts referred for settlement			113.25
Expenditures			13 462.63
Appropriation			15 000.00
Less 5 per cent transferred to transcontinental work		$750.00	
Less 3 per cent transferred to State surveys		450.00	
Expenditures		13 462.63	
			14 662.63
Unexpended balance			337.37

Statement of the expenditures of the United States Coast and Geodetic Survey, etc.—Continued.

PARTY EXPENSES—Continued.

TIDES, ETC.

To whom paid.	On what account.	Amount.
G. C. Hanus, U. S. N.	Tidal observations, schooner Eagre	$150.00
George W. Knox Express	Transportation	4.88
H. L. Marindin	Washington tidal	4.25
E. K. Moore, U. S. N	Tidal observations, steamer Patterson	301.62
H. G. Ogden	Fernandina tidal	85.71
J. F. Pratt	Reedy Island tidal	99.12
Aug. F. Rodgers	Sausalito tidal	1 033.73
L. P. Shidy	Washington tidal	11.83
J. G. Spaulding	Fort Hamilton tidal	1 032.63
E. H. Tillman, U. S. N	Tidal observations, schooner Matchless	604.72
O. H. Tittmann	Fort Hamilton tidal	30.79
U. S. Revenue-Cutter Service	Flags	19.28
B. W. Weeks	Port Royal and Fernandina tidal	628.25
P. A. Welker	Tidal observations	280.94
Expenditures		4 287.75
Appropriation		5 000.00
Less 10 per cent transferred to offshore work, etc	$500.00	
Expenditures	4 287.75	
		4 787.75
Unexpended balance		212.25

COAST PILOT, ETC.

To whom paid.	On what account.	Amount.
Robert G. Peck, U. S. N.	Hydrographic examinations	$249.79
Talbot Pulizzi	Services	900.00
Aug. F. Rodgers	Locating reported danger	47.35
John Ross	Services	1 500.00
Expenditures		2 697.14
Appropriation		3 000.00
Expenditures		2 697.14
Unexpended balance		302.86

MAGNETICS.

To whom paid.	On what account.	Amount.
Adams Express Co.	Transportation	$7.90
J. B. Baylor	Magnetic observations	173.57
R. L. Faris	do	160.77
Owen B. French	do	515.99
Homer P. Ritter	do	622.82
Amount disbursed		1 481.05
Railroad accounts referred for settlement		108.10
Expenditures		1 589.15
Appropriation		2 000.00
Expenditures		1 589.15
Unexpended balance		410.85

Statement of the expenditures of the United States Coast and Geodetic Survey, etc.—Continued.

PARTY EXPENSES—Continued.

LEVELING.

To whom paid.	On what account.	Amount.
Isaac Winston	Precise leveling	$2 635·99
Amount disbursed		2 635·99
Railroad accounts referred for settlement		58·93
Expenditures		2 694·92
Appropriation		2 500·00
Add 5 per cent from Gulf coast, etc		390·00
		2 890·00
Expenditures		2 694·62
Unexpended balance		195·08

STATE SURVEYS.

To whom paid.	On what account.	Amount.
Adams Express Co	Transportation	$4·05
A. L. Baldwin	Base measurement	972·23
John Barlow	Pasturage	421·20
George A. Fairfield	Services	400·00
Walter B. Fairfield	Triangulation	536·92
George W. Knox Express Co	Transportation	23·53
F. D. Granger	Reconnaissance	3 616·19
Thomas Hughes	Storage	6·00
A. T. Mosman	Triangulation	225·71
F. Walley Perkins	do	5 619·75
P. A. Welker	do	447·14
Amount disbursed		12 272·72
Railroad accounts referred for settlement		99·02
Expenditures		12 371·74
Appropriation		12 000·00
Add 3 per cent from Alaska		450·00
		12 450·00
Expenditures		12 371·74
Unexpended balance		78·26

GRAVITY, ETC.

To whom paid.	On what account.	Amount.
M. G. Copeland & Co	Tents	$66·95
A. T. Mosman	Longitudes	755·96
C. H. Sinclair	do	1 173·82
Expenditures		1 996·73
Appropriation		2 500·00
Expenditures		1 996·73
Unexpended balance		503·27

Statement of the expenditures of the United States Coast and Geodetic Survey, etc.—Continued.

PARTY EXPENSES—Continued.

TRANSCONTINENTAL WORK.

To whom paid.	On what account.	Amount.
Adams Express Co	Transportation	$48·90
William Eimbeck	Triangulation	4 829·91
F. D. Granger	Base measurement	1 068·45
F. Walley Perkins	Storage and pasturage	44·20
U. S. Express Co	Transportation	1·95
P. A. Welker	Triangulation	1 380·34
Amount disbursed		7 373·75
Railroad accounts referred for settlement		274·78
Expenditures		7 648·53
Appropriation		7 000·00
Add 5 per cent from Alaska		750·00
		7 750·00
Expenditures		7 648·53
Unexpended balance		101·47

NAVY TRAVEL, ETC.

To whom paid.	On what account.	Amount.
W. J. Barnette, U. S. N	Mileage	$73·12
J. J. Blandin, U. S. N	do	12·80
C. A. Brand, U. S. N	do	37·92
H. G. O. Colby, U. S. N	do	833·28
A. Dunlap, U. S. N	do	12·80
C. T. Forse, U. S. N	do	33·76
G. C. Hanus, U. S. N	do	90·56
J. M. Helm, U. S. N	do	284·88
W. B. Hoggatt, U. S. N	do	4·96
M. K. Johnson, U. S. N	do	45·36
Hugh Rodman, U. S. N	do	660·24
I. K. Seymour, U. S. N	do	34·00
F. B. Sullivan, U. S. N	do	17·12
P. Symington, U. S. N	do	270·56
E. D. Taussig, U. S. N	do	93·92
E. H. Tillman, U. S. N	do	15·04
Thomas Washington, U. S. N	do	258·56
Henry A. Wiley, U. S. N	do	33·52
H. D. Wilson, U. S. N	do	18·08
Expenditures		2 830·48
Appropriation		3 000·00
Expenditures		2 830·48
Unexpended balance		169·52

Statistics of the expenditures of the United States Coast and Geodetic Survey, etc.—Continued.

PARTY EXPENSES—Continued.

OBJECTS NOT NAMED.

To whom paid.	On what account.	Amount.
Charles Alexander	Outfit schooner Spy	$7·00
A. H. Buchanan	Transportation	1·30
H. T. Bull	Services as shipkeeper	76·00
E. A. Davis	Transportation	3·00
W. W. Duffield	Traveling expenses	340·80
George W. Knox Express Co	Transportation	53·67
A. Gerdes & Bro	Stores for schooner Quick	153·91
John Hoodless	Services as shipkeeper	259·00
Charles Johnson	....do	600·00
Charlotte Jones	Laundry for schooner Spy	6·00
William C. Kelly	Stores for schooner Spy	35·00
Etta Mason	Laundering field blankets, etc	7·45
E. K. Moore, U. S. N	Stores for steamer Hassler	15·28
George Olsen	Services as shipkeeper	369·35
A. P. Osborn, U. S. N	Transporting party to Guadalupe Island.	480·69
W. S. Osborn	Storage	1·50
Aug. F. Rodgers	Astronomical, leveling, and transferring tidal station.	1 901·35
Fred'k Springman	Drayage	4·00
Henry L. Whiting	Sale of property and traveling expenses.	48·50
Expenditures		4 363·80
Appropriation		6 000·00
Expenditures		4 363·80
Unexpended balance		1 636·20

RECAPITULATION.

[Showing expenditures in gross by subitems.]

Subitems.	Amount.
Atlantic Coast	$26 862·56
Gulf Coast, etc	6 087·11
Offshore work, etc	5 468·11
Pacific Coast	16 860·04
Alaska	13 349·38
Tides, etc	4 287·75
Coast Pilot, etc	2 697·14
Magnetics	1 481·05
Leveling	2 635·99
State surveys	12 272·72
Gravity, etc	1 996·73
Transcontinental work	7 373·75
Navy travel, etc	2 830·48
Objects not named	4 363·80
Amount disbursed	108 566·61
Railroad accounts referred for settlement	780·86
Expenditures	109 347·47
Total amount appropriated for party expenses, 1897	115 800·00
Total amount expended for party expenses, 1897	109 347·47
Unexpended balance	6 452·53

Statistics of the expenditures of the United States Coast and Geodetic Survey, etc.—Continued.

PARTY EXPENSES—Continued.

CLASSIFICATION OF EXPENDITURES FOR PARTY EXPENSES, 1897.

On what account.	Amount.
Triangulation	$33 015·04
Topography	12 629·47
Hydrography	45 067·05
Coast Pilot	2 697·14
Leveling	3 095·80
Magnetics	1 589·15
Geographical positions	1 996·73
Longitudes in Alaska	947·50
Tidal observations	4 287·75
Base measurements	2 040·68
Astronomical work and moving Presidio tidal establishment	1 500·47
Transporting party to Guadalupe Island	480·69
Total	109 347·47

REPAIRS OF VESSELS, 1897.

To whom paid.	On what account.	Amount.
John A. Berg	Schooner Transit	$6·00
J. J. Blandin, U. S. N	Steamer Endeavor	1 804·18
A. Dunlap, U. S. N	Steamer Blake	1 870·68
Evening Post Publishing Co	Advertising	7·35
Evening Standard	....do	1·33
C. T. Forse, U. S. N	Steamer Endeavor	671·18
J. J. Gilbert	Steamer Fuca	109·93
G. C. Hanus, U. S. N	Schooner Eagre	4 488·15
Hay & Wright	Steamer McArthur	805·42
J. M. Helm, U. S. N	....do	307·92
Charles J. Hendry's Son & Co	....do	642·99
Daniel Hill	Schooner Transit	169·10
W. C. Hodgkins	Naphtha launch	40·43
G. Kaemmerling, U. S. N	Mileage	23·04
E. K. Moore, U. S. N	Steamer Patterson	7 006·49
A. P. Osborn, U. S. N	Steamer Gedney	1 110·26
Charles Oulliber	Schooner Quick	1 022·30
Robert G. Peck, U. S. N	Steamer Bache	817·84
James H. Sears, U. S. N	Steamer McArthur	170·04
E. D. Taussig, U. S. N	Mileage	773·76
The Examiner	Advertising	10·26
The Telegraph Co	....do	1·52
E. H. Tillman, U. S. N	Schooner Matchless	117·00
P. A. Welker	Schooner Quick and Naphtha launch	331·20
Expenditures		22 308·37
Appropriation		25 000·00
Expenditures		22 308·37
Unexpended balance		2 691·63

Statistics of the expenditures of the United States Coast and Geodetic Survey, etc.—Continued.

REPAIRS OF VESSELS, 1897—Continued.

CLASSIFICATION OF EXPENDITURES FOR REPAIRS OF VESSELS.

Name of vessel.	Amount.
Steamer Bache	$817·84
Steamer Blake	1 870·68
Schooner Eagre	4 491·00
Steamer Endeavor	2 475·36
Steamer Fuca	109·93
Steamer Gedney	1 110·26
Schooner Matchless	117·00
Steamer McArthur	1 926·37
Steamer Patterson	7 024·10
Schooner Quick	1 198·56
Schooner Transit	175·10
Naphtha launch	195·37
Mileage of inspecting officers	796·80
Total	22 308·37

PARTY EXPENSES, 1897 AND 1898.

To whom paid.	On what account.	Amount.
Isaac Winston	Precise leveling	$394·91
Appropriation		2 000·00
Expenditures		394·91
Unexpended balance		1 605·09

PUBLISHING OBSERVATIONS, 1897.

To whom paid.	On what account.	Amount.
Buford Lynch	Services	$57·48
Ernest Whitehead	do	600·00
Expenditures		657·48
Appropriation		1 000·00
Expenditures		657·48
Unexpended balance		342·52

GENERAL EXPENSES, 1897.

INSTRUMENTS, INSTRUMENT SHOP, CARPENTER SHOP, DRAWING DIVISION, BOOKS, MAPS, CHARTS, AND SUBSCRIPTIONS.

To whom paid.	On what account.	Amount.
A. Lietz Co	Instruments and instrument shop	$20·00
A. S. Aloe Co	Instrument shop	5·00
American Journal of Science	Subscriptions	6·00
D. Appleton & Co	do	4·58
William Ballantyne & Sons	Books	3·50
D. Ballauf	Instrument shop	3·50
H. Baumgarten	Carpenter shop	5·75
Bausch & Lomb Optical Co	Instruments	92·38
Charles Becker	Instrument and carpenter shops	7·68
Benedict & Burnham Manufacturing Co.	Instrument shop	55·03

Statement of the expenditures of the United States Coast and Geodetic Survey, etc.—Continued.

GENERAL EXPENSES, 1897—Continued.

INSTRUMENTS, INSTRUMENT SHOP, CARPENTER SHOP, DRAWING DIVISION, BOOKS, MAPS, CHARTS, AND SUBSCRIPTIONS—Continued.

To whom paid.	On what account.	Amount.
John Bliss & Co	Instruments and charts	$268.30
Blum Bros	Instrument shop	2.13
William Bond & Son	Instruments	30.00
R. R. Bowker	Subscriptions	5.00
Andrew W. Boyd	Books	25.00
Leger Bronsseau	....do	1.00
Brown & Sharp Manufacturing Co	Instruments, instrument shop, and drawing division.	197.62
N. Bunce	Instrument shop	3.70
Thomas E. Butler	Instruments	195.64
S. C. Chandler	Books	10.00
John Chatillon & Sons	Instrument shop	20.00
J. H. Chesley & Co	Instruments, instrument and carpenter shops.	81.24
Rufus P. Clark	Books	43.67
Doremus & Just	Instruments	1.50
H. C. Easterday	Instrument shop	.25
Eimer & Amend	Carpenter shop	3.20
Engineering Magazine	Books	3.00
George T. Ennis	Instrument shop	203.92
L. E. Farnham	Maps	3.00
Julien P. Firez	Instruments	42.50
Geological Publishing Co	Subscriptions	3.50
Z. D. Gilman	Instrument shop and drawing division.	3.20
Grayson & Cain	Carpenter shop	55.20
Henry J. Green	Instruments	228.15
W. & L. E. Gurley	Instruments	273.90
Hanlon & Goodman	Carpenter shop	.40
R. M. Harrover	Instrument shop	7.65
L. O. Hodges	Drawing division	3.00
H. Hoffa	Instruments	1.25
H. S. Crocker Co	Books	5.00
U. T. Hungerford	Instrument shop	15.95
E. E. Jackson & Co	Carpenter shop	6.20
Jones & Laughlin, Limited	Instrument shop	11.34
J. B. Kendall	Instrument and carpenter shops	4.24
Kennedy & Du Perow	Instrument shop	1.50
Keuffel & Esser Co	....do	41.25
James S. Lambie	Carpenter and instrument shops	103.21
J. Francis Le Baron	Maps	60.40
Lemcke & Buechner	Books and subscriptions	61.54
John Lenz's Sons & Co	Instrument shop	1.05
Melville Lindsay	....do	.36
Loeb Bros	....do	18.55
Loeb Bros. Leather Belting Co	....do	20.91
W. H. Lowdermilk & Co	Books and subscriptions	225.91
Lowman & Hanford S. & P. Co	Maps	.30
A. D. Maclachlan	Instruments	89.10
William McLeod	Instrument shop	7.00
Mackall Bros. & Flemer	....do	61.60
Manhattan Brass Co	....do	33.00
F. P. May & Co	Carpenter shop	.70
McFadden Co	Instrument shop	.36
Montgomery & Co	Carpenter shop	14.28
W. B. Moses & Sons	....do	26.11
Munn & Co	Subscriptions	7.00
N. Murray	....do	5.00
Samuel Murset & Son	Instruments	37.50
George F. Muth & Co	Instrument and carpenter shops and drawing division.	121.41
Ocean Grove Association	Maps	1.50
Charles A. Orth & Co	Books	3.00
John C. Parker	....do	5.00
W. A. Pate	Carpenter shop	.96
E. J. Pullman	Instrument shop	7.84
William Ramsey	Instruments and instrument shop	140.50
W. P. Ramsey	Instrument shop	26.25
Rand, McNally & Co	Books	56.25

Statement of the expenditures of the United States Coast and Geodetic Survey, etc.—Continued.

GENERAL EXPENSES, 1897—Continued.

INSTRUMENTS, INSTRUMENT SHOP, CARPENTER SHOP, DRAWING DIVISION, BOOKS, MAPS, CHARTS, AND SUBSCRIPTIONS—Continued.

To whom paid.	On what account.	Amount.
Hugh Reilly	Instrument and carpenter shops	$67·55
F. J. Reutlinger	Instrument shop	44·80
E. S. Ritchie & Sons	....do	228·69
Aug. F. Rodgers	....do	20·00
Rowley & Hermann Co	Carpenter shop	150·00
Royce & Marean	Instrument shop	2·82
Fred A. Schmidt	Instruments, instrument shop, and drawing division.	311·86
L. H. Schneider's Sons	Instrument and carpenter shops	54·60
Science	Subscriptions	5·00
F. T. Scott	Instrument shop	1·50
Seth Thomas Clock Co	Instruments	143·15
George A. Shehan	Carpenter shop	494·03
M. Silverberg & Co	Instrument and carpenter shops	18·48
J. L. Smith	Maps	1·60
Thomas Somerville & Sons	Instruments and instrument shop	1·85
Spon & Chamberlaine	Books	1·50
Standard Oil Co	Instrument shop	9·00
Gustav E. Stechert	Books and subscriptions	392·89
Ormond Stone	Books	2·00
Sussfield, Lorsch & Co	Instruments	135·00
M. A. Tappan	Instrument shop	7·50
Augustus C. Taylor & Co	....do	57·53
The Age of Steel	Books	1·00
The Alfred Ely Co	Instrument shop	37·04
The Carborundum Co	....do	18·45
The Frank H. Clement Co	Instrument and carpenter shops	11·50
The Macmillan Co	Books	3·00
The Norris Peters Co	Maps	3·00
The Phosphor Bronze and Smelting Co.	Instrument shop	50·20
Thomson Stationery Co., Limited	Maps	2·00
Tice & Lynch	Instruments	3·00
University of Chicago	Subscriptions	6·00
U. S. Naval Institute	....do	3·50
R. M. Van Arsdale	....do	2·00
Amount disbursed		5 434·45
Account settled by Auditor for supplies for drawing division		155·22
Expenditures		5 589·67
Appropriation		8 000·00
Received from U. S. Commission of Fish and Fisheries for instruments furnished that commission		105·30
Received from U. S. Marine-Hospital Service for work done in the instrument shop for that service		180.79
		8 286·09
Expenditures		5 589·67
Unexpended balance		2 696·42

COPPER PLATES, CHART PAPER, PRINTING INK; COPPER, ZINC, AND CHEMICALS FOR ELECTROTYPING AND PHOTOGRAPHING; ENGRAVING, PRINTING, PHOTOGRAPHING, AND ELECTROTYPING SUPPLIES; EXTRA ENGRAVING AND DRAWING; PHOTOLITHOGRAPHING AND PRINTING FROM STONE AND COPPER FOR IMMEDIATE USE.

To whom paid.	On what account.	Amount
American Steel and Copper Plate Co.	Copper plates	$324·63
R. C. Ballantyne	Chart paper and printing supplies	3 767·49
Charles Becker	Printing supplies	12·60
Bureau of Engraving and Printing	....do	929·00
W. H. Butler	....do	2·25

Statistics of the expenditures of the United States Coast and Geodetic Survey, etc.—Continued.

GENERAL EXPENSES, 1897—Continued.

COPPER PLATES, CHART PAPER, PRINTING INK; COPPER, ZINC, AND CHEMICALS FOR ELECTROTYPING AND PHOTOGRAPHING, ETC.—Continued.

To whom paid.	On what account.	Amount.
J. H. Chesley & Co	Printing supplies	$15·34
Rufus P. Clarke	do	184·53
Clendenin Bros	Copper plates	218·52
J. B. Colt & Co	Photographing supplies	235·50
H. C. Easterday	do	25·05
Eastman Kodak Co	do	6·67
E. Morrison Paper Co	Printing and electrotyping supplies	139·52
J. C. Ergood & Co	do	3·87
Gillin Printing Co	Photolithographing	117·72
Z. D. Gilman	Photographing, printing, electrotyping, and engraving supplies.	161·19
Andrew B. Graham	Photolithographing	334·38
R. M. Harrover	Zinc	4·00
A. Hoen & Co	Photolithographing	169·00
Jones & Laughlin, Limited	Printing supplies	32·19
Lansburgh & Bro	do	3·73
James B. Lambie	do	·18
Melville Lindsay	Photographing, printing, and electrotyping supplies.	19·88
Loeb Bros	Printing supplies	19·88
Loeb Bros. Leather Belting Co	do	31·20
Mackall Bros. & Flemer	Photographing, printing, electrotyping, and engraving supplies.	94·05
Mackey Print Paper Co	Chart paper and photographing supplies.	71·35
William S. MacLeod	Printing supplies	49·00
A. D. Maclachlan	Photographic supplies	1·50
Matthiesen & Hegeler	Zinc	183·63
Robert Meyer & Co	Printing supplies	30·00
W. H. Mehler	do	2·75
Francis Miller	Photographing and printing supplies	29·50
Mount Holly Paper Co	Chart paper	10·79
Charles A. Muddiman	Printing supplies	9·48
George F. Muth & Co	Printing and electrotyping supplies	2·08
New York Steel and Copper Plate Co.	Copper plates	380·50
John C. Parker	Chart paper	15·00
E. J. Pullman & Son	Photographing supplies	108·45
Do	do	8·60
Hugh Reilly	Photographing and printing supplies	3·90
Royce & Marean	Electrical supplies	100·37
Fred. A. Schmidt	Photographing supplies	112·30
L. H. Schneider's Son	Photographing and printing supplies	15·17
George A. Shehan	Printing supplies	28·03
Shoemaker & Busch	Photographing and electrotyping supplies.	107·70
Standard Oil Co	Printing supplies	16·90
Stationery Division, Treasury Department.	do	46·75
Aug. C. Taylor & Co	Photographing, printing, and engraving supplies.	79·93
The Gilling Printing Co	Photolithographing	204·62
The Niles Tool Works Co	Printing supplies	11·10
The Norris Peters Co	Photolithographing	35·00
The Otto Gas Engine Works	Printing supplies	25·00
The Peter Adams Paper Co	Chart paper	724·13
The Strobridge Lithograph Co	Photolithographing Co	987·43
United States Electric Light Co.	Photographing supplies	6·78
Theo. Wasserbach	Engraving supplies	9·00
Williams, Brown & Earle	Photographing supplies	2·50
Expenditures		10 271·61
Appropriation		15 500·00
Received for charts printed for Public Printer		122·20
		15 622·20
Expenditures		10 271·61
Unexpended balance		5 350·59

Statement of the expenditures of the United States Coast and Geodetic Survey, etc.—Continued.

GENERAL EXPENSES, 1897—Continued.

STATIONERY, TRANSPORTATION OF INSTRUMENTS AND SUPPLIES, OFFICE WAGON AND HORSES, FUEL, GAS, TELEGRAMS, ICE, AND WASHING.

To whom paid.	On what account.	Amount.
Adams Express Co	Transportation	$68·80
American Thermometer Co	Stationery	1·50
William Ballantyne & Sons	do	4·63
H. Baumgarten	do	·90
J. Baumgarten & Sons	do	8·06
Brentano Bros	do	3·10
Childs & Channon	do	42·00
James Connor	Office horse	27·50
E. Morrison Paper Co	Stationery	232·00
Gaylor Bros	do	·75
Guggenheimer, Weill & Co	do	11·00
Independent Ice Co	Ice	170·31
V. Baldwin Johnson	Fuel	1 246·00
Keuffel & Esser Co	Transportation	1·10
Nanny D. Lee	Washing	165·86
Lutz & Co	Office horse	12·60
Mackey Print Paper Co	Transportation	2·00
McDermott Carriage Co	Office wagon	65·00
McDermott & Britton	Stationery	22·00
George F. Muth & Co	do	41·78
John C. Parker	do	45·50
People's Dispatch Co	Transportation	3·70
Postal Telegraph Cable Co	Telegrams	13·14
C. B. Robinson	Office horse	12·00
Aug. F. Rodgers	Stationery and washing	11·30
Fred. A. Schmidt	Stationery	329.59
B. F. Shaw	Office horse	251·98
Smithsonian Institution	Transportation	136·30
Stephenson's Express	do	1·50
The George W. Knox Express Co	do	5·95
Tice & Lynch	do	8·89
Union Typewriter and Supply Co	Stationery	2·00
United States Express Co	Transportation	40·35
Washington Gas Light Co	Gas	1 270·30
Western Union Telegraph Co	Telegrams	105·89
Wyckoff, Seamans & Benedict	Stationery	·40
Amount disbursed		4 365·68
Accounts for stationery settled by Auditor		624·09
Expenditures		4 989·77
Appropriation		6 000·00
Expenditures		4 989·77
Unexpended balance		1 010·23

MISCELLANEOUS EXPENSES, CONTINGENCIES OF ALL KINDS, OFFICE FURNITURE, REPAIRS, EXTRA LABOR, AND TRAVELING EXPENSES (OFFICE).

To whom paid.	On what account.	Amount.
George F. Muth & Co	Contingencies	$14·37
National Architect and Builder	Advertising	4·40
Owen Owen	Contingencies	18·00
George H. Phillips	Repairs	12·00
E. D. Preston	Office travel	4·25
William G. Raymond	Contingencies	31·95
Hugh Reilly	do	31·40
Revenue-Cutter Service	do	12·78
Aug. F. Rodgers	do	16·90
E. G. Schafer & Co	do	58·37
L. H. Schneider's Son	do	8·10
S. S. Shedd & Bro	Repairs	60·00

Statement of the expenditures of the United States Coast and Geodetic Survey, etc.—Continued.

GENERAL EXPENSES, 1897—Continued.

MISCELLANEOUS EXPENSES, CONTINGENCIES OF ALL KINDS, OFFICE FURNITURE, REPAIRS, EXTRA LABOR, AND TRAVELING EXPENSES (OFFICE)—Continued.

To whom paid.	On what account.	Amount.
Shoemaker & Busch	Contingencies	$10.04
Thomas Somerville & Son	do	18.63
Standard Oil Co	do	2.36
A. C. Taylor & Co	do	33.00
J. F. Tennerson	do	34.50
The Chesapeake and Potomac Telephone Co.	Exchange, rental, and contingencies	103.50
The C. J. McCubbin Co	Repairs	4.71
The Evening Star Newspaper Co	Advertising	13.13
The Julius Lansburgh Furniture and Carpet Co.	Contingencies	4.50
The Oakley Soap and Perfumery Co	do	18.45
The Washington Capital	Advertising	4.00
The Washington Review	do	4.80
The Washington Sentinel	do	7.17
The Washington Times Co	do	12.30
O. H. Tittmann	Office travel	29.75
O. H. Towles	Office furniture	37.50
Union Typewriter and Supply Co	Contingencies	98.75
William Wagner	do	.45
John Walsh	Repairs	50.00
Washington Post Co	Advertising	10.90
James P. Willett	Post-office box rent	20.00
Wilmarth & Edmonston	Contingencies	28.90
Wimsatt & Uhler	Office furnitnre	100.00
O. H. Wolfsteiner & Co	Contingencies	15.00
Wyckoff, Seamans & Benedict	do	96.60
D. Ballauf	Repairs	17.00
Charles E. Barrick	do	152.90
Blum Bros	Contingencies	1.23
Frank Boyden	do	5.00
M. P. Bush	do	1.80
Octav Chanute	do	54.50
J. H. Chesley & Co	do	13.79
Chief Clerk, Treasury Department	do	21.54
Rufus P. Clark	do	52.67
Walter Y. Clark	Extra labor	600.00
W. D. Colt	Contingencies	6.00
M. G. Copeland & Co	do	8.00
G. G. Cornwell & Sons	do	2.10
W. W. Duffield	Office travel	30.75
Otto Dukes & Co	Office furniture	185.00
J. C. Ergood & Co	Contingencies	39.46
Amanda M. Fite	do	6.90
R. J. Fondren	Extra labor	600.00
Frank Ford	Contingencies	5.00
J. R. Francis	Repairs and contingencies	72.40
Frank Freeman	Contingencies	96.25
Alfred Gilbert	Extra labor	480.00
Z. D. Gilman	Contingencies	11.50
Jennie H. Griffin	do	12.00
James Halloran	do	3.00
Charles T. Halloway	do	12.00
R. M. Harrover	Repairs and contingencies	205.12
Henry A. Jones & Co	Contingencies	1.40
Jordan & Christie	do	11.25
Thomas Keely	do	5.00
James B. Lambie	do	1.80
Lansburgh & Bro	do	29.42
Library Bureau	Office furniture	76.00
Melville Lindsay	Contingencies	17.20
Mackall Bros. & Flemer	do	1.65
William S. MacLeod	do	56.98
F. P. May & Co	do	.70
John Meehan	Repairs	12.00
Edward Miller	Contingencies	12.00
John T. Mockabee	do	10.00

Statement of the expenditures of the United States Coast and Geodetic Survey, etc.—Continued.

GENERAL EXPENSES, 1897—Continued.

MISCELLANEOUS EXPENSES, CONTINGENCIES OF ALL KINDS, OFFICE FURNITURE, REPAIRS, EXTRA LABOR, AND TRAVELING EXPENSES, (OFFICE)—Continued.

To whom paid.	On what account.	Amount.
W. B. Moses & Sons	Contingencies	$486·99
Charles A. Muddiman	do	4·50
Amount disbursed		4 454·26
Account settled by Auditor for flags furnished by Revenue-Cutter Service		7·06
Expenditures		4 461·32
Appropriation		4 500·00
Expenditures		4 461·32
Unexpended balance		38·68

RECAPITULATION.

[Showing expenditures in gross (by subitems) on account of appropriation for general expenses, 1897.]

Subitems.	Amount.
Instruments, instrument shop, carpenter shop, drawing division, books, maps, charts, and subscriptions	$5 434·45
Copper plates, chart paper, printing ink, copper, zinc, and chemicals for electrotyping and photographing; engraving, printing, photographing and electrotyping supplies; extra engraving and drawing; photolithographing and printing from stone and copper for immediate use	10 271·61
Stationery, transportation of instruments and supplies, office wagon and horses, fuel, gas, telegrams, ice, and washing	4 365·68
Miscellaneous expenses, contingencies of all kinds, office furniture, repairs, extra labor, and traveling expenses (office)	4 454·26
Total disbursements	24 526·00
Accounts settled by Auditor as shown under each paragraph	786·37
Total expenditures	25 312·37
Total amount appropriated for general expenses, 1897	34 000·00
Received from other bureaus as shown under each paragraph	408·29
	34 408·29
Total amount expended for general expenses, 1897	25 312·37
Unexpended balance	9 095·92

CLASSIFICATION OF EXPENDITURES FOR GENERAL EXPENSES, 1897.

On what account.	Amount.	On what account.	Amount.
Instruments	$1 431·91	Transportation of instruments and supplies	$268·59
Instrument shop	1 493·37	Office horse and wagon	369·08
Carpenter shop	1 075·08	Fuel	1 246·00
Drawing division	668·54	Gas	1 270·30
Books	734·95	Telegrams	119·03
Maps	73·60	Ice	170·31
Subscriptions	112·22	Washing	167·06
Copper plates	923·65	Miscellaneous expenses and contingencies of all kinds	1 879·54
Chart paper	4 565·44	Office furniture	398·50
Zinc	187·63	Repairs	438·53
Engraving, printing, photographing, and electrotyping supplies	2 746·74	Extra labor	1 680·00
Photolithographing and printing from stone and copper for immediate use	1 848·15	Traveling expenses (office)	64·75
Stationery	1 379·40	Total	25 312·37

Statement of the expenditures of the United States Coast and Geodetic Survey, etc.—Continued.

SALARIES—STANDARD WEIGHTS AND MEASURES, 1897.

To whom paid.	Time employed.	Amount.
ADJUSTER.		
Louis A. Fischer	One year	$1 500·00
MECHANICIAN.		
Otto Storm	One year	1 250·00
ASSISTANT MESSENGER.		
Charles A. Harbaugh	One year	669·00
WATCHMAN.		
James A. McDowell	One year	660·29
Expenditures		4 079·29
Appropriation		4 190·00
Expenditures		4 079·29
Unexpended balance		110·71

CONTINGENT EXPENSES, STANDARD WEIGHTS AND MEASURES.

MATERIALS AND APPARATUS AND INCIDENTAL EXPENSES.

To whom paid.	On what account.	Amount.
Adams Express Co	Transportation	$4·50
Rufus P. Clark	Materials and contingencies	10·65
H. C. Easterday	Contingencies	1·00
Eimer & Amend	do	18·16
Z. D. Gilman	Materials	1·80
Emil Greiner	Apparatus	15·00
R. M. Harrover	Contingencies	14·55
J. B. Kendall	do	·40
W. H. Loudermilk & Co	do	2·60
Mackall Bros. & Flemer	do	13·48
People's Dispatch Co	Transportation	·35
E. G. Soltmann	Apparatus	2·00
Henry Troemner	Contingencies	9·20
O. H. Tittmann	do	3·00
United States Express Co	Transportation	29·20
United States Mint	Contingencies	358·47
Wilmarth & Edmonston	do	2·20
Wyckoff, Seamans & Benedict	do	3·75
Expenditures		490·31
Appropriation		975·00
Expenditures		490·31
Unexpended balance		484·69

Expenditures since last report on account of the appropriations for the service of the fiscal years 1895, 1895 and 1896, and 1896.

GENERAL EXPENSES, 1895.

COPPERPLATES, CHART PAPER, ETC.

To whom paid.	On what account.	Amount.
R. F. Bartle & Co.	Extra engraving	$3 018·32
Balance on hand, report for 1896		4 199·40
Expended since, as above		3 018·32
Present unexpended balance		1 181·08

STATIONERY, TRANSPORTATION OF INSTRUMENTS, ETC.

To whom paid.	On what account.	Amount.
Postal Telegraph Cable Co.	Telegrams	$4·59
Balance on hand, report for 1895		1 725·51
Expended since, as above		4·59
Present unexpended balance		1 720·92

RECAPITULATION.

[Showing expenditures by subitems.]

Subitems.	Amount.
Copper plates, chart paper, etc	$3 018·32
Stationery, transportation of instruments and supplies, etc	4·59
Expenditures	3 022·91
Balance on hand, report for 1896	12 593·07
Expended since, as above	3 022·91
Present unexpended balance	9 570·16

PARTY EXPENSES, 1895 AND 1896.

STATE SURVEYS.

To whom paid.	On what account.	Amount.
F. Walley Perkins	Triangulation	$11·45
Balance on hand, report for 1896		232·03
Expended since, as above		11·45
Present unexpended balance		220·58

TRANSCONTINENTAL WORK.

	Amount.
Balance on hand, report for 1896	$267·39
Railroad account referred for settlement since last report	30·00
Present unexpended balance	237·39

Expenditures since last report on account of the appropriations for the service of the fiscal years 1895, 1895 and 1896, and 1896—Continued.

PARTY EXPENSES, 1895 AND 1896—Continued.

RECAPITULATION.

[Showing expenditures in gross by subitems.]

Subitems.	Amount.
State surveys	$11 ·45
Transcontinental work	30 ·00
Expenditures	41 ·45
Balance on hand, report for 1896	1 513 ·32
Expended since, as above	41 ·45
Present unexpended balance	1 471 ·87

PARTY EXPENSES, 1896.

LEVELING.

	Amount.
Railroad account referred for settlement	$4 ·44
Balance on hand, report for 1896	296 ·23
Expended since, as above	4 ·44
Present unexpended balance	291 ·79

OBJECTS NOT NAMED.

	Amount.
Annual contribution to International Geodetic Association	$347 ·04
Balance on hand, report for 1896	1 491 ·43
Expended since, as above	347 ·04
Present unexpended balance	1 144 ·39

RECAPITULATION.

[Showing expenditures in gross by subitems.]

	Amount.
Leveling	$4 ·44
Objects not named	347 ·04
Expenditures	351 ·48
Balance on hand, report for 1896	3 138 ·73
Expended since, as above	351 ·48
Present unexpended balance	2 787 ·25

REPAIRS OF VESSELS, 1896.

To whom paid.	On what account.	Amount.
William F. Butler	Whaleboat for steamer Blake	$200·00
Balance on hand, report for 1896		204·15
Expended since, as above		200·00
Present unexpended balance		4·15

Expenditures since last report on account of the appropriations for the service of the fiscal years 1895, 1895 and 1896, and 1896—Continued.

GENERAL EXPENSES, 1896.

INSTRUMENTS, INSTRUMENT SHOP, CARPENTER SHOP ETC.

To whom paid.	On what account.	Amount.
Lemcke & Buechner	Subscriptions	$2·20
S. C. Chandler	Books	2·80
H. Hoffa	Instrument shop	25·13
Geo. F. Muth & Co	....do	5·68
Fred. A. Schmidt	Drawing division	14·28
Gustav E. Stechert	Subscriptions	5·00
		55·09
Balance on hand, report for 1896		2 170·67
Expended since, as above		55·09
Present unexpended balance		2 115·58

COPPER PLATES, CHART PAPER, ETC.

To whom paid.	On what account.	Amount.
The Niles Tool Works Co	Printing supplies	$2 166·00
The Ourdan and Kolb Engraving-Machine Engraving and Mercantile Co.	Extra engraving	1 809·38
		3 975·38
Balance on hand, report for 1896		8 852·39
Expended since, as above		3 975·38
Present unexpended balance		4 877·01

MISCELLANEOUS EXPENSES, CONTINGENCIES OF ALL KINDS, ETC.

To whom paid.	On what account.	Amount.
The Washington Times Co	Advertising	$4·40
Balance on hand, report for 1896		120·56
Expended since, as above		4·40
Present unexpended balance		116·16

RECAPITULATION.

[Showing expenditures by subitems.]

Subitem.	Amount.
Instruments, instrument shop, etc	$55·09
Copper plates, chart paper, etc	3 975·38
Miscellaneous expenses, etc	4·40
Expenditures	4 034·87
Balance on hand, report for 1896	12 269·44
Expended since, as above	4 034·87
Present unexpended balance	8 234·57

Expenditures since last report on account of the appropriations for the service of the fiscal years 1895, 1895 and 1896, and 1896—Continued.

GENERAL EXPENSES, 1896—Continued.

GENERAL RECAPITULATION.

[Showing appropriations, expenditures, and balances for the fiscal year ending June 30, 1897; also for the month of June, 1897, on account of party expenses, 1897 and 1898.]

Name of appropriation.	Appropriated.	Expended.	Balances.
Salaries:			
Pay for field officers	$90 400·00	$89 129·62	$1 270·38
Pay of office force	135 170·00	133 563·57	1 606·43
Party expenses	115 800·00	109 347·47	6 452·53
Repairs of vessels*	25 000·00	22 308·37	2 691·63
Publishing observations	1 000·00	657·48	342·52
Party expenses, 1897 and 1898	2 000·00	394·91	1 605·09
General expenses:*			
Sundry civil act June 11, 1896.. 34 000·00			
Received from other bureaus.. 408·29	34 408·29	25 312·37	9 095·92
Salaries, weights and measures	4 190·00	4 079·29	110·71
Contingent expenses, weights and measures	975·00	490·31	484·69
Total	408 943·29	385 283·39	23 659·90
Amounts appropriated and available, as follows:			
Appropriation for Coast and Geodetic Survey proper for fiscal year ending June 30, 1897, sundry civil act June 11, 1896			$401 370·00
Appropriation for party expenses, 1897 and 1898, sundry civil act June 4, 1897			2 000·00
Appropriation for office of Standard Weights and Measures, legislative act May 28, 1896			5 165·00
Received from other bureaus			408·29
			408 943·29
Amounts expended as follows:			
For Coast and Geodetic Survey		$380 713·79	
For office of Standard Weights and Measures		4 569·60	
			385 283·39
Total unexpended balance			23 659·90

* The balances on these appropriations are subject to reduction on account of outstanding obligations and the total unexpended balance will be reduced accordingly.

UNITED STATES COAST AND GEODETIC SURVEY,
OFFICE OF THE DISBURSING AGENT,
Washington, D. C., January 1, 1898.

I certify that the foregoing statement is a correct exhibit of all expenditures for the United States Coast and Geodetic Survey and for the Office of Standard Weights and Measures for the fiscal year ending June 30, 1897, and for all preceding years embraced within the limits of the law for making such expenditures, including all accounts paid up to the close of business on December 31, 1897.

SCOTT NESBIT,
Disbursing Agent, United States Coast and Geodetic Survey.

Approved:

HENRY S. PRITCHETT,
Superintendent United States Coast and Geodetic Survey.

OFFICE REPORT NO. 4—1897.

REPORT OF THE ASSISTANT IN CHARGE OF THE OFFICE OF STANDARD WEIGHTS AND MEASURES FOR THE FISCAL YEAR ENDING JUNE 30, 1897.

UNITED STATES COAST AND GEODETIC SURVEY,
OFFICE OF STANDARD WEIGHTS AND MEASURES,
Washington, D. C., June 30, 1897.

SIR: I have the honor to report that during the fiscal year just closed the usual amount of work has been accomplished in the Office of Standard Weights and Measures and prompt attention has been given to the numerous calls for information. The usual operations of verification and adjustment of weights, capacity measures, standards of length, thermometers, alcoholometers, salinometers, etc., for departments of the Government, the several States, institutions of learning, engineers and surveyors, manufacturers and private parties, have been carried on, and the results, considering the small force of the office, have been quite satisfactory. Some progress has been made, also, in the preparation for the construction and verification of electrical standards, but a point has now been reached where an increase in the instrumental outfit of the office is imperatively demanded, and I earnestly recommend that in the estimates to be submitted to Congress in December the item "for purchase of materials and apparatus and for incidental expenses" be increased to $2 500, the usual appropriation of $500 being now entirely inadequate. This increase need not necessarily be continuous, but if made even for a single year, will enable us to procure instruments which are indispensable.

The work of the year has been of the usual character, and almost altogether of the routine order, so that none of the operations require special mention or description of methods, with the exception, perhaps, of the determination of the coefficients of expansion of 6-metre standard bar No. 2 and 6-metre base bars Nos. 3 and 4, and the determination of the values of the metric subdivisions of the Mural standard. The former operation was performed in the vault, and by means of the 6-metre comparator, the necessary range of temperature being obtained by the use of ice and hot water alternately. The standard bar was packed in melting ice, while the base bars Nos. 3 and 4 were immersed in hot water, and vice versa, and sufficient time was allowed to elapse between and after changes to insure the attainment by the bars of the thermic conditions indicated by the thermometers. These determinations were made by me, with the assistance of Assistant E. B. Latham, who was temporarily detailed to the Office of Standard Weights and Measures for the purpose.

The determination of the values of the metric subdivisions of the Mural standard was made by Assistant E. B. Latham, under my direction, by means of an optical beam compass consisting of two micrometer microscopes securely mounted in a wooden beam, which was supported by three screws. These screws furnished a ready means of making the focal adjustments. All the metres of the Mural standard were determined in terms of the sixteenth metre, which was arbitrarily chosen as a tentative standard, and the actual values were subsequently readily deduced, as the total length of the Mural standard was already known. In observing, the optical beam compass was first adjusted over the chosen tentative standard metre and three readings of the micrometers were recorded; then the beam compass was similarly adjusted over any other metre and three readings of each micrometer were taken; then, returning to the tentative standard, the observations thereon were repeated. Temperatures in each case were noted and the two sets of observations on the tentative standard were combined and compared with those taken on the

other metre under examination. This process was repeated until all the individual metres of the Mural standard had been compared a sufficient number of times and their values determined in terms of the sixteenth metre. Five standard thermometers were used during the work, one being continuously on the tentative standard and the other four on the four metres to be next examined. On completing the observations on any metre its thermometer was immediately moved four metres ahead, so that ample time was in all cases allowed for the thermometer to adapt itself to the temperature of the new position before being again observed. The thermometers were always in actual contact with the Mural bar and the bulbs were protected by metallic shields. While there doubtless may be some uncertainty as to actual temperatures of the bar, yet, as the observations on each metre were immediately preceded and followed by observations on the tentative standard, the relative temperatures cannot be materially in error. The results of the comparison proved very satisfactory.

No change in the personnel of the office occurred during the year. Messrs. L. A. Fischer and C. A. Harbaugh have, as heretofore, efficiently performed the various duties assigned to them, the former serving throughout the year, and the latter until June 15, when he resigned to accept a more lucrative position in another department.

Mr. Fischer also prepared the exhibit of this office for the Nashville Exposition and installed it there early in May.

Mr. Otto Storm, mechanician, was detailed throughout the year to the instrument division.

Mr. W. R. Whitman, mechanician of the instrument division, served in the Office of Standard Weights and Measures during July and August, 1896, and part of March, 1897, and was engaged principally upon the adjustment of weights and measures belonging to the State of Massachusetts, but rendered valuable service also on miscellaneous work.

Mr. R. B. Crutchfield was engaged on miscellaneous duties until March 15, when, his services being no longer required, he was assigned to other employment in the office of the Survey.

The temporary detail of Assistant E. B. Latham to the Office of Weights and Measures has already been referred to.

Before closing this report I beg to refer again to the valuable services of Mr. L. A. Fischer, and to renew my recommendation that provision be made in the annual estimates for an increase of his compensation.

Accompanying this report is an abstract of verifications, determinations, and standardizations made during the year for other departments and for outside parties.

Yours, respectfully,

ANDREW BRAID,
Assistant, United States Coast and Geodetic Survey, in Charge of Office of Standard Weights and Measures.

Gen. W. W. DUFFIELD,
Superintendent United States Coast and Geodetic Survey, and of Office of Standard Weights and Measures.

Abstracts of verifications, determinations, standardizations, etc., of weights and measures made during the fiscal year ending June 30, 1897.

Date.	Name.	Service.
1896.		
July	United States Coast and Geodetic Survey	A 3-metre fractional base bar graduation tested.
	Keuffel & Esser, New York	Three tapes compared.
	United States Coast and Geodetic Survey	Four thermometers compared.
	P. T. Hildebrand, Orangeburg, S. C	Capacity measures adjusted.
	United States Agricultural Department	Thermometers compared.
	United States Coast and Geodetic Survey	Six thermometers compared.
	United States Coast and Geodetic Survey	Scale No. 90 compared.
	Boston Water Works, Boston, Mass	Information furnished.
	Keuffel & Esser, New York	Tape compared.
	Henry F. Fletcher, Scitico, Conn	Information furnished.

Abstracts of verifications, determinations, standardizations, etc.—Continued.

Date.	Name.	Service.
1896.		
August	F. E. Brandis Sons & Co., Brooklyn, N. Y	Tape compared.
	Boston Water Works, Boston, Mass	Three tapes compared.
	Lufkin Rule Co., Saginaw, Mich	Information furnished.
	United States Coast and Geodetic Survey	Ivory scale compared.
	Queen & Co., Philadelphia, Pa	Two tapes compared.
	United States Coast and Geodetic Survey	One-fourth metre scale compared.
	United States Coast and Geodetic Survey	Tape compared.
	Joseph S. Peebles, Cincinnati, Ohio	Information furnished.
September	W. & L. E. Gurley, Troy, N. Y	Tape compared.
	Charles Lehenbauer, Watertown, Mass	Information furnished.
	R. I. D. Ashbridge, Philadelphia, Pa	Tape compared.
	W. A. Collard, Cincinnati, Ohio	Information furnished.
	W. & L. E. Gurley, Troy, N. Y	Information furnished.
	W. & L. E. Gurley, Troy, N. Y	Two tapes compared.
	Prof. H. D. Randall, Berkeley, Cal	Information furnished.
October	F. E. Brandis Sons & Co., Brooklyn, N. Y	Leveling rod compared.
	E. D. Preston, Washington, D. C	Magnetometer ring, mass determined.
	Anderson Price, New York, N. Y	Information furnished.
	W. & L. E. Gurley, Troy, N. Y	Information furnished.
	Robert A. Cummings, Philadelphia, Pa	Information furnished.
	Wolstenholme & Buffington, Fall River, Mass	Tape compared.
	Case School, Cleveland, Ohio	Two tapes compared.
	O. C. Trip, Rockland, Me	Three tapes compared.
	L. B. Ganyard, Medina, Ohio	Tape compared.
	Joseph C. Wagner, Germantown, Philadelphia, Pa	Tape compared.
	Lufkin Rule Co., Saginaw, Mich	Information furnished.
	L. S. Starrett Co., Athol, Mass	Information furnished.
	Charles M. Slocum, Springfield, Mass	Tape compared.
	F. Bloch, Philadelphia, Pa	Two tapes compared.
	Joseph C. Wagner, Germantown, Philadelphia, Pa	Tape compared.
	F. E. Brandis Sons & Co., Brooklyn, N. Y	Information furnished.
	United States Geological Survey	Two leveling rods compared.
	W. & L. E. Gurley, Troy, N. Y	Tape compared.
	Isaac Winston, Washington, D. C	Two leveling rods compared.
	Charles M. Slocum, Springfield, Mass	Tape compared.
	Instrument division, United States Coast and Geodetic Survey.	Tape compared.
November	George L. Wells, President Michigan Engineering Society, Bay City, Mich.	Information furnished.
	Charles M. Slocum, Springfield, Mass	Information furnished.
	George F. Lucas, Castile, N. Y	Information furnished.
	W. R. Lynch Manufacturers' Association, Brooklyn, N. Y.	Information furnished.
	Instrument division, United States Coast and Geodetic Survey.	Tape 137 compared.
	United States Treasury Department	Information furnished.
	Instrument division, United States Coast and Geodetic Survey.	Two leveling rods compared.
	United States Coast and Geodetic Survey	Six thermometers compared.
	William Nelson, C. E., Laconia, N. H	Two tapes compared.
	Charles Fernald, assistant engineer, District of Columbia.	Tape compared.
	P. Elbert Nostrand, New York	Tape compared.
	C. H. Sinclair, Washington. D. C	Tape compared.
	J. N. Roe, Valparaiso, Ind	Information furnished.
	Prof. Joseph Smith, Valparaiso, Ind	Information furnished.
December	Instrument division, United States Coast and Geodetic Survey.	Three thermometers compared.
	Instrument division, United States Coast and Geodetic Survey.	Six thermometers compared.
	Instrument division, United States Coast and Geodetic Survey.	Five balances compared.
	Instrument division, United States Coast and Geodetic Survey.	Two tapes compared.
	United States Geological Survey	Tape compared.
	Frank P. Blair, Chicago, Ill	Information furnished.
	McGill University, Montreal, Canada	Tape compared.
	George F. Lucas, Castile, N. Y	Tape compared.
	University of California, Berkeley, Cal	Tape compared.
	Instrument division, United States Coast and Geodetic Survey.	Tape compared.

Abstracts of verifications, determinations, standardizations, etc.—Continued.

Date.	Name.	Service.
1896.		
December	John E. Alter, Rensselaer, Ind	Tape compared.
	Wolstenholme & Buffington, Fall River, Mass	Tape compared.
1897.		
January	Instrument division, United States Coast and Geodetic Survey.	Five tapes compared.
	F. J. Hubbard, Plainfield, N. J	Tape compared.
	Instrument division, United States Coast and Geodetic Survey.	Six thermometers compared.
	Instrument division, United States Coast and Geodetic Survey.	Five spring balances compared.
	Williams, Brown & Earle, Philadelphia, Pa	Tape compared.
	F. Herdt, Mamaroneck, N. Y	Tape compared.
	J. A. Grier, Chicago, Ill	Information furnished.
	United States Weather Bureau	Information furnished.
	Instrument division, United States Coast and Geodetic Survey.	Two tapes compared.
	United States Geological Survey	Tape compared.
	George E. Thackray, Johnstown, Pa	Information furnished.
February	State of Massachusetts	Verification and adjustment of a large number of standards of weight and measure.
	Joseph S. Saxton, Washington, D. C	Information furnished.
	George R. Gyger, Alliance, Ohio	Tape compared.
	O. M. Stimson, Anniston, Ala	Information furnished.
	L. S. Starrett Co., Athol, Mass	Forty-eight-inch bar compared.
	Marine-Hospital Service, Washington, D. C	Four thermometers compared.
	Lemuel Lozier, Hackensack, N. J	Tape compared.
	United States Treasury Department	Information furnished.
March.....	Instrument division, United States Coast and Geodetic Survey.	Five leveling rods compared.
	E. A. Fisher, Rochester, N. Y	Tape compared.
	Walter Gribben, Brooklyn, N. Y	Gramme weight compared.
	State of Massachusetts	Verification and adjustment of weights and measures belonging to the State.
	Edward Haidock, Blooomington, Ind	Tape compared.
	William Palmer, Carlisle, Pa	Information furnished.
	United States Engineers Office, Philadelphia, Pa	Tape compared.
	Instrument division, United States Coast and Geodetic Survey.	Metric scale compared.
	Computing division, United States Coast and Geodetic Survey.	Coefficient of expansion of three 6-metre bars determined.
	William Brenner, Providence, R. I	Tape compared.
April.....	Prof. A. James, Marion, Ind	Information furnished.
	E. C. Woodward, Colorado Springs, Colo	Gramme weights compared.
	Instrument division, United States Coast and Geodetic Survey.	Inertia ring, dimensions and mass determined.
	Instrument division, United States Coast and Geodetic Survey.	Two tapes compared.
	William C. Brannen, Providence, R. I	Information furnished.
	Case School, Cleveland, Ohio	Tape compared.
	Lufkin Rule Co., Saginaw, Mich	Tape compared.
	Instrument division, United States Coast and Geodetic Survey.	Tape compared.
	Instrument division, United States Coast and Geodetic Survey.	Six thermometers compared.
	Instrument division, United States Coast and Geodetic Survey.	Four salinometers compared.
	Instrument division, United States Coast and Geodetic Survey.	Leveling rod compared.
May	Prof. George H. Hamlin, Maine State College, Orono, Me.	Information furnished.
	Massachusetts Institute of Technology, Boston, Mass.	Information furnished.
	O. S. Baylies, Chicago, Ill	Two tapes compared.
	Columbia College, New York, N. Y	Three 4-metre bars compared.
	William Eimbeck, Washington, D. C	Information furnished.
	William Eimbeck, Washington, D. C	Four base-bar scales compared.
	E. S. Wheeler, Sault Ste. Marie, Mich	Seven thermometers compared.
	Missouri State University, St. Louis, Mo	Information furnished.
	Keuffel & Esser, New York	Six tapes compared.
	Oscar Erlandsen, Jamaica, N. Y	Tape compared.

Abstracts of verifications, determinations, standardizations, etc.—Continued.

Date.	Name.	Service.
1897.		
May	United States Coast and Geodetic Survey	Three spring balances compared.
	United States Coast and Geodetic Survey	Five tapes compared.
	J. L. Little, Rochester, N. Y	Tape compared.
	United States Coast and Geodetic Survey	Four thermometers compared.
	United States Coast and Geodetic Survey	Six thermometers compared.
	W. & L. E. Gurley, Troy, N. Y	Tape compared.
June	J. A. Holmes, Cambridge, Mass	One hundred feet steel tape compared.
	Whitall, Tatum & Co., Philadelphia, Pa	Information furnished.
	J. Y. Miller, Hartford, Kans	Information furnished.
	United States Treasury Department	Information furnished.
	United States Coast and Geodetic Survey	Three spring balances compared.
	United States Coast and Geodetic Survey	Three tapes compared.
	United States Geological Survey	Two level rods compared.
	Christian Becker, New Rochelle, N. Y	Set of weights verified.
	O. H. Trip, Rockland, Me	One hundred feet tape marked and compared.

LIST OF PROGRESS SKETCHES—1897.

1. Sketch of general progress (eastern sheet.)
2. Sketch of general progress (western sheet.)
3. General chart of Alaska.
4. Sketch showing the progress of surveys in southeast Alaska to June 30, 1897.
5. Map showing longitude stations and connections determined by electric telegraph between 1846 and June 30, 1897.
6. Map showing positions of magnetic stations occupied between 1844 and June 30, 1897.
7. Map showing lines of geodetic leveling run and positions of gravity and tide stations to June 30, 1897.
8. Map showing the distribution of the principal astronomic stations occupied by the Coast and Geodetic Survey for latitude, longitude, and azimuth to June 30, 1897.
9. Sketch showing extension of primary triangulation to Montreal, and resurveys of the coast east of Hudson River to June 30, 1897.
10. Sketch showing extension of primary triangulation along the thirty-ninth parallel to the Capes of the Delaware, and resurveys between Hudson River and Cape Florida to June 30, 1897.
11. Sketch showing progress of primary triangulation from Atlanta base to the Gulf of Mexico, with subsketches of Lake Pontchartrain and Brazos River.
12. Sketch of the Pacific coast from San Diego to Point Conception, showing progress of primary triangulation in vicinity of Los Angeles base and resurvey of Santa Monica and San Pedro Harbors, with subsketches of Puget Sound and San Francisco Bay.
13. Sketch showing progress of triangulation across the peninsula of Florida.
14. Sketch showing triangulation in Kansas and Nebraska, with subsketches showing Salt Lake base and triangulation in Missouri.
15. Triangulation sketch of St. Paul Island, Alaska

Blank page retained for pagination

UNITED STATES
COAST AND GEODETIC SURVEY

SKETCH OF GENERAL PROGRESS

JUNE 30 1897

Eastern Sheet

Scale 5,000,000

Statute Miles

105° 100° 95° 90° 85° 80° 75° 70° 65°

50° 45° 40° 35° 30°

NORTH DAKOTA
SOUTH DAKOTA
NEBRASKA
KANSAS
OKLAHOMA TERRITORY
INDIAN TERRITORY
TEXAS
IOWA
MINNESOTA
WISCONSIN
ILLINOIS
MISSOURI
ARKANSAS
LOUISIANA
MISSISSIPPI
MICHIGAN
INDIANA
OHIO
KENTUCKY
TENNESSEE
ALABAMA
GEORGIA
FLORIDA
SOUTH CAROLINA
NORTH CAROLINA
VIRGINIA
WEST VIRGINIA
PENNSYLVANIA
NEW YORK
MAINE
VERMONT
NEW HAMPSHIRE
MASSACHUSETTS
RHODE ISLAND
CONNECTICUT
NEW JERSEY
DELAWARE
MARYLAND

LAKE SUPERIOR
LAKE MICHIGAN
LAKE HURON
LAKE ERIE
LAKE ONTARIO

ATLANTIC OCEAN

Axis of the Gulf Stream - Warmest Band

Bismarck
Deadwood
Yankton
Dubuque
St. Paul
St. Peters
Fond du Lac
Oshkosh
Milwaukee
Racine
Chicago
Grand Rapids
Saginaw
Detroit
Toronto
Buffalo
Rochester
Oswego
Ogdensburg
Montreal
Quebec
St. John
Cape Sable
Eastport
Bangor
Augusta
Portland
Concord
Boston
Providence
Hartford
New Haven
Albany
Springfield
Cape Cod
Newport
Poughkeepsie
Utica
Syracuse
Rochester
Erie
Cleveland
Toledo
Fort Wayne
Logansport
Columbus
Zanesville
Wheeling
Pittsburg
Harrisburg
Williamsport
Scranton
Wilkesbarre
Reading
Philadelphia
Trenton
Atlantic City
New York
Baltimore
Washington
Fredericksburg
Richmond
Norfolk
Lynchburg
Cape Hatteras
Raleigh
Newbern
Wilmington
Columbia
Georgetown
Charleston
Augusta
Savannah
Macon
Atlanta
Huntsville
Montgomery
Jackson
Vicksburg
Natchez
Memphis
Helena
Little Rock
Fort Smith
Shreveport
Dallas
Waco
Austin
Galveston
Guthrie
Topeka
Atchison
Kansas City
Quincy
Keokuk
Davenport
Rock Island
Peoria
Springfield
Terre Haute
Indianapolis
Cincinnati
Louisville
Lexington
Evansville
Cairo
Des Moines
Omaha
Yankton
Deadwood
Yerro
St. Peters
Duluth

INDIAN TERRITORY
OKLAHOMA
ARKANSAS
TENNESSEE
MISSISSIPPI
ALABAMA
GEORGIA
SOUTH CAROLINA
NORTH CAROLINA
VIRGINIA
TEXAS
LOUISIANA
FLORIDA
ATLANTIC
OCEAN
GULF OF MEXICO
MEXICO
CUBA

Cairo
Memphis
Cushrie
Little Rock
Helena
Huntsville
Raleigh
Cape Hatteras
Wilmington
Columbia
Augusta
Atlanta
Charleston
Mason
Savannah
Montgomery
Dallas
Shreveport
Roxbury
Jackson
Natchez
Waco
Austin
Mobile
Pensacola
Tallahassee
Jacksonville
Baton Rouge
New Orleans
Key West
Cape Canaveral
Galveston
San Antonio
Corpus Christi
Laredo
Matamoras
Rio Grande
Monterey
Tampico
Cape Catoche
Progreso
Campeche
Vera Cruz
Tortugas
Havana
Santiago
C. San Antonio
Nassau
Santiago de Cuba

100° 95° 90° 85° 80° 75°
25° 30° 35°

EXPLANATION OF SYMBOLS

Primary Triangulation
Secondary, Tertiary, Triangulation
Reconnaissance
Surveyed Topography
.....do.....In-shore Hydrography
.....do.....Off-shore .....do.....
Lines of Deep Sea Soundings
.....do.....Geodetic Levelling

THE HORNIS PETERS CO., LITHO., WASHINGTON, D. C.

UNITED STATES
COAST AND GEODETIC SURVEY

SKETCH OF GENERAL PROGRESS

JUNE 30 1897

Western Sheet

Scale 5.000000

Statute Miles

60 40 30 20 10 0 50 100 150 500

EXPLANATION OF SYMBOLS

- Primary Triangulation
- Secondary / Tertiary } Triangulation
- Reconnaissance
- Surveyed Topography
- do. In-shore Hydrography
- do. Off-shore do.
- Lines of Deep Sea Soundings
- do. Geodetic Levelling

PACIFIC OCEAN

LOWER CALIFORNIA

MEXICO

TEXAS

INDIAN TERRITORY

ARKANSAS

LOUISIANA

MISSISSIPPI

GULF OF MEXICO

MEXICO

San Diego
Tucson
El Paso del Norte
Guadalupe I.
Cerros I.
Cuspacs
Chihuahua
Presidio del Norte
Eagle Pass
Laredo
Corpus Christi
Matamoros
Rio Grande
Monterey
La Paz
Cape San Lucas
Mazatlan
San Blas
Cape Corrientes
Manzanilla
Tampico
Vera Cruz
Campeche
Frontera
Little Rock
Helena
Arkansas
Dallas
Waco
Austin
San Antonio
Houston
Galveston
Arkansas
Jackson
Natchez
Baton Rouge
New Orleans

115° 110° 105° 100° 95° 90°
30° 25° 20°

THE HORRIS PETERS CO. LITHO., WASHINGTON, D. C.

GENERAL CHART OF

ALASKA

Scale $36\frac{1}{000}\,000$

Compiled from United States and Russian Authorities

ALL SOUNDINGS IN FATHOMS, HEIGHTS IN FEET

Published 1898 H. S. PRITCHETT, Superintendent
Verified; O. H. Tittmann, Assistant in charge of the Office
E. D. Taussig, Lieut. Comdr. U. S. N., Hydrographic Inspector

(Date of first publication 1890)

Statute Miles
20 10 0 20 40 60 80 100 120 140 160 180 200 220

Nautical Miles
20 10 0 20 40 60 80 100 120 140 160 180 200 220

Kilometres
50 0 50 100 150 200 250 300 350 400 450

Note. *One Kilometre or 1000 metres = 3280·83 ft. = $\frac{5}{8}$ of a statute mile nearly. One statute mile = 1609·35 metres.*

East from Greenwich 142° 144° 146° 148° 150° 152° 154° 156° 158° 160° 162° 164° 166° 168° 170° 172° 174° 176° 178° East from Greenwich 180° West from Greenwich

64° 62° 60° 58° 56° 54° 52° 50° 48°

Bear Ids. · Ramennie Ids. · Bear Cape · St Richard · Little Barmor C. · Big Barmor C. · Nichne Kolymsk · Kolyma R. · Balagan · Sand Cape · Arun Ids. · Chaikel I. · Rautan I. · C. Chelagskoi · Chuania R. · CHAUN BAY · EASTERN SIBERIA

Anadir R. · Kolpakoff · Rubicon R. · Oweka R. · Ingestasia Bay · C. Opukinsk · Petchnor Gulf · C. Krangutang · Natalia Bay · Village · C. Wittgenstein · Bay Anchorage · Six Foot I. · C. Olutorsk · OLUTORSK GULF · Olutorsk · Olutora R. · Harbor Pt. · Lawor Hbr. · Baroness Kor Bay · C. Ilpinsky · Verkhoturof I. · C. Golenichef · C. Kasmitchef · Kayaginski I. · C. Kashevinnikof · UKINSK BAY · C. Nagiknak · C. Ozerni · Khuchefskaia · New Kamchatka · Chiwruchi Mt. · C. Stolbovoi · C. Apuka · C. Kamchatka · GULF OF KAMCHATKA · Mt. Kronotski · Chronotski R. · C. Kroshef · KRONOTSKI BAY · Mt. Joupanski · C. Klin · Petropavlovsk · Avatcha B. · C. Nachikinef · Shipunski · KAMCHATKA · COMMANDORSKI IDS. · North Cape · N.W. Cape · N.E. Cape · Toporkoff Pt. · Nikolaki · Tonkoi Pt. · Mt. Stellerberg · Bering I. · Whale Bank · Tolstoi Pt. · S.E. Cape · N.W. Cape · Copper I. · Yestestchanaya R. · S.E. Cape · 100 fathom curve · Varn. 5° E. in 1895 · Varn. 10° E. in 1895

C. Wrangell · Attu I. · Chichagof Hbr. · Sarana R. · Alaskiere R. · NEAR ISLANDS · Semichi Ids. · Ingenstrom Rks. · Agattu I. · Baidir I. · Pillar Rock · Kyska I. · Kyska Hbr. · Chugal I. · Rhwostof I. · Semisopochnoi I. · I. Kyska I. · I. Sitkin I. · Rat I. · RAT ISLANDS · Amchitka I. · Kinzlof B. · Constantine Hbr. · Gareloi I. · Ogliuga I. · Unalga I. · Ulak · Amatig · ALEUTIAN

BERING SEA

PLATE No. 2461

West from Greenwich
MACKENZIE BAY
Mackenzie River
Ft. Good Hope
Herschel I.
Demarcation Pt.
British Mts.
Buckland Mts.
Davidson Mts.
Richardson Mts.
Romanzof Mts.
Franklin Mts.
Mt. Greenough
Colville R.
Var'n 40° E. in 1895
Var'n 35° E. in 1895
Var'n 30° E. in 1895
Var'n 25° E. in 1895
Var'n 20° E. in 1895
Old Crow R.
Rampart Ho.
Boundary Mt.
Upper Ramparts
Lower Ramparts
Rat Lake
Fort Yukon
Arctic Circle
Peavy Trading Post
Circle
Fort Hamlin
Rampart City
Tanana Hills
Porcupine Dome
Mastodon Dome
Ketchumstock Hills
Fortymile
KLONDIKE REGION
Fort Reliance
Dawson
Rocky Mountains
Mt. Jesus
Frazer Falls
Pelly River
Pelly Mountains
Pelly Banks Post
Mt. Logan
Glenlyon Mts.
Little Salmon R.
Big Salmon R.
Cassiar Mts.
Liard River
High Mountains
Atlin L.
Chilkat Pass
Chilkoot Pass
Skagway
JUNEAU
Telegraph Creek
Stikine River
Dease Lake
Nasse River
Port Simpson
Dixon Entrance
Cape Knox
Queen Charlotte Is.
Hecate Str.
Cape Muzon
Kupreanof I.
Chichagof I.
Baranof I.
Cape Spencer
Cape Ommaney
Cross Sound
Icy Strait
Lituya Bay
C. Fairweather
St. Elias Range
Mt. St. Elias
Mt. Logan
Malaspina Glacier
Yakutat Bay
C. Yakataga
Mt. Wrangell
Mt. Sanford
Mt. Blackburn
Copper R.
Mt. Natazhat
Valdes
Prince William Sound
Cape St. Elias
Kayak I.
Montague I.
Middleton I.
Cape Cleare
Knik Lake
Trading Post
Mt. Sushitna
Sushitna R.
Mt. McKinley (Bulshaia)
Kuskokwim R.
Western Branch
Yukon Hills
Tanana R.
A L A S K A
Y U K O N D I S T
B R I T I S H C O L U M B I A
Cook Inlet
Kenai Peninsula
Lake Clark
Iliamna Lake
Iliamna Peak
Redoubt Vol.
Augustine I.
Cape Elizabeth
Barren Ids.
Cape Douglas
Kodiak I.
St. Paul
Afognak I.
Shuyak I.
Trinity Ids.
Sitkinak I.
Chirikof I.
Semidi Ids.
Shumagin Ids.
SHUMAGIN BANK
ALBATROSS BANK
PORTLOCK BANK
BRISTOL BAY
ALASKA PENINSULA
Mt. Chiginagak
Port Heiden
GULF OF ALASKA
100 fathom curve
N O R T H P A C I F I C O C E A N
152° 150° 148° 146° 144° 142° 140° 138° 136° 134° 132° 130° 128° 126° 124° 122° 120° 118° 116°
160° 158° 156° 154° 152° 150° 148° 146° 144° 142° 140° 138°
62° 60° 58° 56° 54° 52° 50° 48°

3

Sketch showing the Progress of Surveys in
SOUTH EAST ALASKA
Scale 1/1200000
Nautical Miles
Statute Miles
Kilometres
BRITISH COLUMBIA
Cape Yaktag
Icy Cape
Malaspina Glacier
Mt. St. Elias
Mt. Logan
Mt. Augusta
Mt. Cook
Mt. Vancouver
Mt. Hubbard
Pt. Manby
Ocean Cape
Yakutat
Alsek River
Cape Fairweather
Harbor Point
Icy Point
Cape Spencer
CROSS SOUND
Cape Cross
Glacier Bay
Icy Strait
CHICHAGOF ISLAND
Cape Edward
Cape Georgiana
Cape Edgecumbe
SITKA
BARANOF ISLAND
FREDERICK SOUND
KUPREANOF I.
Cape Ommaney
CHRISTIAN SOUND
Zarembo I.
Wrangell I.
IPHIGENIA BAY
PRINCE OF WALES ISLAND
Cape Addington
Cape Bartolome
Wolf Rock
Forrester I.
C. St. Augustine
CLEVELAND PENINSULA
REVILLAGIGEDO ISLAND
Cape Muzon
Cape Chacon
DIXON ENTRANCE
Cape Knox
North I.
Dundas I.
PORTLAND
OBSERVATORY INLET
GRAHAM I.

Positions and Connections of Telegraphic Longitude Stations from 1846 to June 30, 1897

U. S. Coast and Geodetic Survey

W. W. Duffield, Superintendent

BASE MAP OF THE UNITED STATES

(Projected on intersecting cone)

Scale 1:7000000

1896

Statute Miles

Kilometres

Stations and connections to June 30, 1896

" " " between 1896 & 97

Station connection without change of observers by other than C. & G.S. parties

Computing Division
Jan. 1898

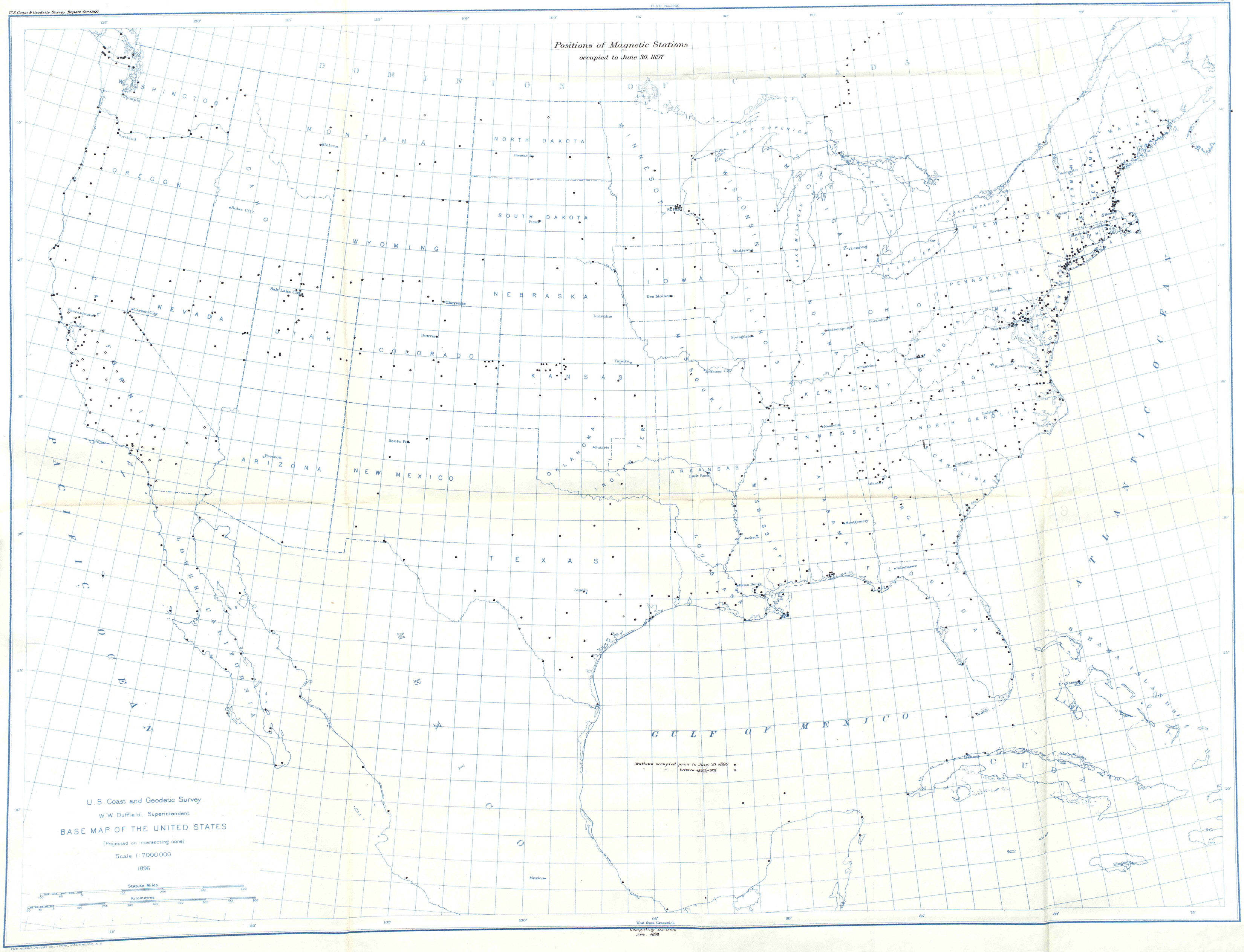

THE NORRIS PETERS CO., LITHO., WASHINGTON, D. C.

Routes of Geodetic Spirit Leveling and Positions of Gravity and Tide Stations to June 30 1897.

U. S. Coast and Geodetic Survey

W. W. Duffield, Superintendent

BASE MAP OF THE UNITED STATES

(Projected on intersecting cone)

Scale 1:7000000

1896

Statute Miles

Kilometres

Lines of levels run prior to June 30 1896 ——

" " " " between 1895-1896 – – –

" " " " by U.S. Engineers ----------

Gravity stations prior to June 30 1896

" " between 1895-1896

The location of Tide Stations are shown thus:
Where series of Observations of 2 to 3 years
" " " " 3 " 9 "
" " " " 9 and more years
The letter d. affixed to the symbol indicates that daily predictions for that station are given in the Tide Tables.

West from Greenwich

Computing Division
Jan 1898

THE NORRIS PETERS CO., LITHO., WASHINGTON, D. C.

Distribution of the principal astronomic stations occupied by the U.S. Coast and Geodetic Survey for Latitude, Longitude and Azimuth to June 30, 1897.

U.S. Coast and Geodetic Survey

W.W. Duffield, Superintendent

BASE MAP OF THE UNITED STATES

(Projected on intersecting cone)

Scale 1:7000000

1896

Statute Miles

Kilometres

Explanation of Signs:
- Latitude Stations
- Longitude "
- Azimuth "
- Combination Stations with open dots for the fiscal year 1896 to 1897.

Commuting Division
Jan. 1898

UNITED STATES
COAST AND GEODETIC SURVEY

SKETCH SHOWING EXTENSION OF

PRIMARY TRIANGULATION TO MONTREAL
AND

RESURVEYS OF THE COAST

EAST OF HUDSON RIVER

Scale 1:2,000,000

June 30, 1897

Statute Miles

10 8 6 4 2 0 10 20 30 40 50 60 70

Kilometres

0 10 20 30 40 50 60 70 80 90 100 110 120 130 140

Note. One kilometre or 1000 metres = 3280.83 ft. = $\frac{5}{8}$ of a statute mile nearly. One statute mile = 1609.35 metres

Note

Sides of Triangles of the first order.
do. do. do. second order.
do. do. do. third order.
Astronomical Station.
Magnetic do.

Note

The shaded surfaces indicate recent surveys and re-surveys

THE HORRIS PETERS CO., LITHO., WASHINGTON, D. C.

SKETCH SHOWING

EXTENSION OF PRIMARY TRIANGULATION

ALONG THE 39TH PARALLEL

TO THE CAPES OF THE DELAWARE

Scale 1/1000000

June 30th 1897

Statute Miles

10 8 6 4 2 0 10 20 30 40 50

Note

The shaded surfaces indicate re-surveys

Brunswick Bar

Scale 1/200000

June 30, 1897

Statute Miles

5 4 3 2 1 0 5

Savannah River Entrance

Scale 1/200000

June 30, 1897

THE NORRIS PETERS CO., LITHO., WASHINGTON, D. C.

SKETCH SHOWING
EXTENSION OF PRIMARY TRIANGULATION
FROM ATLANTA BASE TO THE GULF OF MEXICO

Scale $\frac{1}{1000000}$

June 30th 1897

Sketch showing
Survey of Brazos River
Texas

Scale $\frac{1}{600000}$

June 30th 1897

Sketch showing
Progress of Survey of Lake Pontchartrain
Louisiana

Scale $\frac{1}{600000}$

June 30th 1897

THE NORRIS PETERS CO., LITHO., WASHINGTON, D. C.

PACIFIC COAST

From San Diego to Pt. Conception

Showing Progress of Primary Triangulation

In Vicinity of Los Angeles Base

Scale $\frac{1}{600\,000}$

June 30, 1897

Supplementary Surveys in San Francisco Bay

Topographical Sheets Nos. 1614 1616 1617 1618 1619 1620 1621 1622 1625 1629 1631 1632 in 1881 '82, 2195 2205 2206 2207 in 1894-95. 2243 2244 2245 in 1895, 2258 2252 in 1896.

Hydrographic Sheets Nos. 1522 '82, 1882 1883 '88, 1628 '84, 2283 2284 2285 in 1894-95, 2244 2246 in 1895-96, 2304 2310 in 1896, 2301 in 1896-97.

Resurvey of San Pablo Bay.

Topographical Sheets Nos. 1696 '86, 1697 '86, 1825 '86, 1826 '86 & '87, 1827 '87.

Hydrographic Sheets Nos. 1779 '86, 1801 '87, 2266 2256 in '96.

Resurvey of Suisun Bay:

Topographical Sheets Nos. 1803 '86, 1804 '87. 1793 86 87, 1648 87, 1830 1855 88, 1847 87 88. 1892, 1893, 1972, 1973 and 1974, in 1888.

Hydrographic Sheets Nos. 1780 and 1781 '86, 1784 and 1795 '87. 2021, 2023, 2024 and 2025 in 1890

Sub-Sketch

Showing Resurvey of

SAN FRANCISCO BAY

Scale $\frac{1}{600\,000}$

June 30, 1897

Sub-Sketch

Showing Resurvey in

PUGET SOUND

Scale $\frac{1}{600\,000}$

June 30, 1897

Kilometres 10 5 0 10 20 30 40 50 60 70

Statute Miles 3 2 1 0 5 10 15 20 25 30 35 40 45 50

THE NORRIS PETERS CO., METHO., WASHINGTON, D. C.

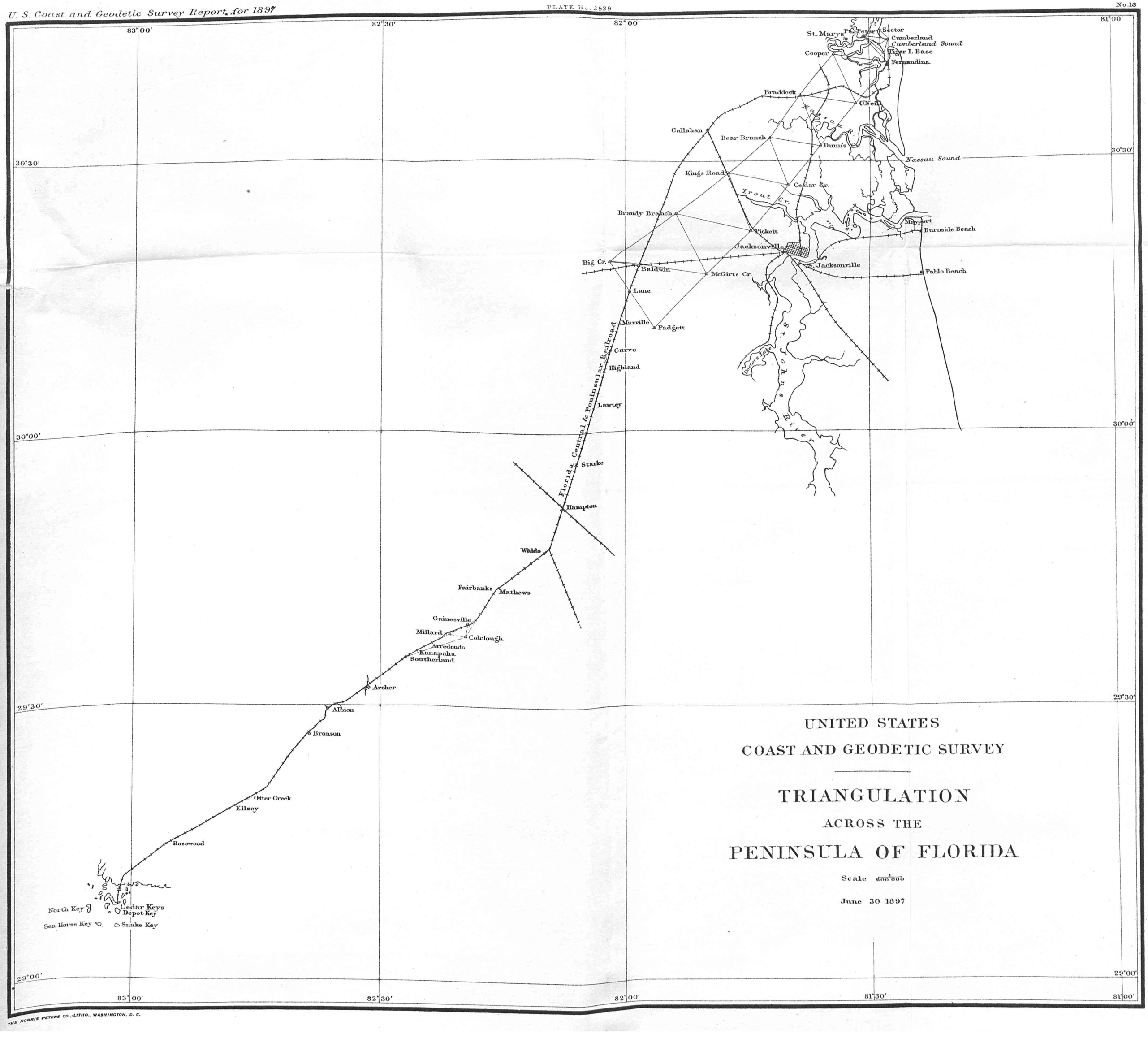

UNITED STATES
COAST AND GEODETIC SURVEY

TRIANGULATION
ACROSS THE
PENINSULA OF FLORIDA

Scale $\frac{1}{600,000}$

June 30 1897

THE HORRIS PETERS CO.-LITHO., WASHINGTON, D. C.

THE NORRIS PETERS CO., PHOTO-LITHO., WASHINGTON, D. C.

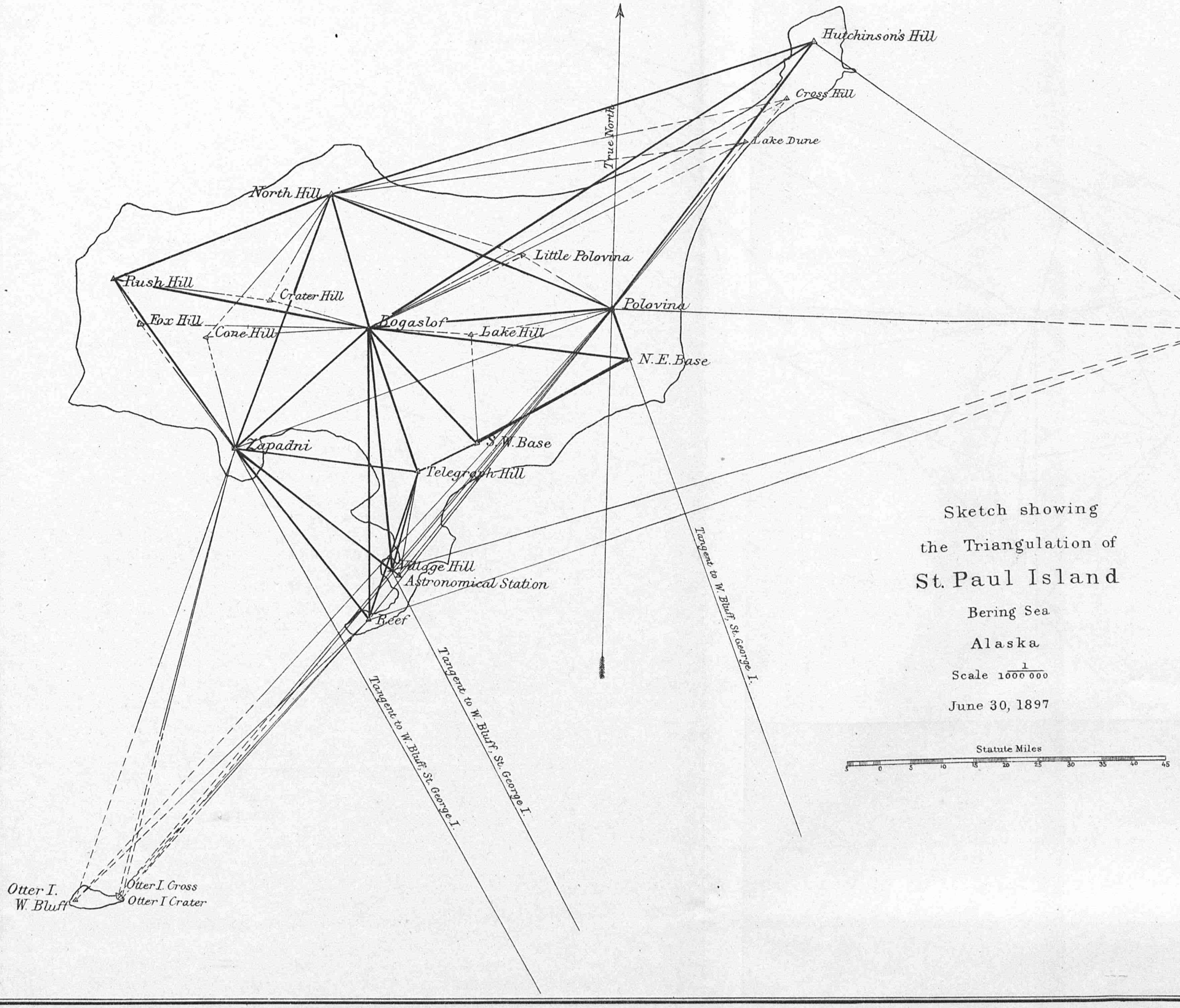

Sketch showing

the Triangulation of

St. Paul Island

Bering Sea

Alaska

Scale $\frac{1}{1000\,000}$

June 30, 1897

Statute Miles

5 0 5 10 15 20 25 30 35 40 45

THE NORRIS PETERS CO., PHOTO-LITHO., WASHINGTON, D. C.

UNITED STATES COAST AND GEODETIC SURVEY.

PART II.

APPENDICES RELATING TO THE METHODS, DISCUSSIONS, AND RESULTS OF THE COAST AND GEODETIC SURVEY.

Blank page retained for pagination

TITLES OF APPENDICES.

Page.

No. 1.—Distribution of the magnetic dip and magnetic intensity in the United States for the epoch January, 1890. By C. A. Schott, assistant. (Second edition, with 3 charts) 157

No. 2.—The telegraphic longitude net of the United States and its connection with that of Europe, 1866–1896. By C. A. Schott, assistant 197

No. 3.—Resulting longitudes of Kadiak, Unalaska, and Unga, as determined chronometrically from Sitka in 1896, by the party under the charge of Fremont Morse, assistant. Report by C. A. Schott, assistant 259

No. 4.—Resulting heights from spirit leveling between Holliday and Salina, Kans., from observations by I. Winston, assistant, between July 11 and October 28, 1895. Submitted for publication by C. A. Schott, assistant, November 13, 1897..... 269

No. 5.—Results of magnetic observations made in connection with the Greenland Expedition of 1896, under the charge of Prof. A. E. Burbon. By G. R. Putnam, assistant..... 285

No. 6.—Results of pendulum observations made in 1895 and 1896. By G. R. Putnam, assistant..... 297

No. 7.—Notes relating to self-registering tide gauges as used by the United States Coast and Geodetic Survey. By J. F. Pratt, assistant 313

No. 8.—Manual of Tides, Part I. Introduction and historical treatment of the subject. By Rollin A. Harris 319

No. 9.—Manual of Tides, Part II. Tidal Observations, Equilibrium Theory, and Harmonic Analysis. By Rollin A. Harris..... 471

No. 10.—Photo-topographic methods and instruments. By J. A. Flemer, assistant..... 619

No. 11.—The new duplex base apparatus of the Coast and Geodetic Survey. By William Eimbeck, assistant 737

No. 12.—Report on the Measurement of the Salt Lake Base Line. By William Eimbeck, assistant..... 753

Blank page retained for pagination

LIST OF ILLUSTRATIONS.

TO APPENDIX NO. 1.

Page.

No. 1.—Isoclinic chart of the United States for the epoch January, 1900 196
No. 2.—Isodynamic chart of the horizontal component of the magnetic force in the United States for the epoch January, 1900 196
No. 3.—Isodynamic chart of the total magnetic force in the United States for the epoch January, 1900.... 196

TO APPENDIX NO. 2.

No. 1.—Telegraphic longitude net of the United States and its connection with that of Europe..... 258

TO APPENDIX NO. 4.

No. 1.—Route diagram..... 272

TO APPENDIX NO. 5.

No. 1.—Sketch showing magnetic stations and route of the Greenland expedition..... 296
No. 2.—Diurnal changes in magnetic declination..... 296

TO APPENDIX NO. 6.

No. 1.—Pendulums..... 312
No. 2.—Pendulum stations of 1895 and 1896..... 312

TO APPENDIX NO. 7.

No. 1.—..... 316
No. 2.—..... 318
No. 3.—Saxton self-registering tide gauge..... 318
No. 4.—Stierle self-registering tide gauge..... 318
No. 5.—Stierle self-registering tide gauge..... 318

TO APPENDIX NO. 8.

No. 1.—Diagram illustrating tropic tides at San Francisco, Cal..... 330
No. 2.—Diagram illustrating wave motion..... 341
Nos. 3, 4, and 5.—Diagrams illustrating tidal forces (on one plate)..... 353
No. 6.—Diagram 354
No. 7.—Diagram 366
No. 8.—Phase inequality, Tybee Island Light, Georgia 381
Nos. 9, 10, 11, and 12.—Tidal curves at Willets Point, N.Y.; Sandy Hook, N. J.; Philadelphia, Pa., and Galveston, Tex. (on one plate)..... 385
Nos. 13, 14, and 15.—Tidal curves at Mazatlan, Mexico; Port Townsend, Wash., and St. Michael, Alaska, (on one plate)..... 385
Nos. 16, 17, and 18.—Tidal curves at Honolulu, Hawaiian Islands; Papeete, Tahiti, and Havre, France (on one plate)..... 385
No. 19.—Tidal curves at Haining, Rambler Island, and Volcano Island, China..... 385

TO APPENDIX NO. 9.

No. 1.—Saxton self-registering tide gauge..... 481
No. 2.—Avery self-registering tide gauge..... 481
No. 3.—Stierle self-registering tide gauge, as modified by the Coast and Geodetic Survey 482
No. 4.—Stierle self-registering tide gauge, as modified by the Coast and Geodetic Survey..... 482

Page.
No. 5.—Tidal indicator 483
No. 6.—Diagram 497
No. 7.—Diagram 507
No. 8.—Diagram 508
No. 9.—Diagram 512
No. 10.—Diagram 518
No. 11.—Stencil for the M summation; sheet for the even hours 539
No. 12.—Diagram 574

TO APPENDIX NO. 10.

No. 1.—Diagram 630
No. 2.—Diagram 630
No. 3.—Diagram 631
No. 4.—Diagram 631
No. 5.—Diagram 632
No. 6.—Diagram 632
No. 7.—Diagram 633
No. 8.—Diagram 634
No. 9.—Diagram 635
No. 10.—Diagram illustrating Steiner's five-point problem 636
No. 11.—Diagram showing simplified construction of five-point problem 637
No. 12.—Diagram showing special case of the five-point problem 638
No. 13.—Diagram showing three-point problem 640
No. 14.—Diagram showing three-point problem, Bohmenberger & Bessel method 641
No. 15.—Diagram, Hauck's method, "Kernel points and planes" 642
No. 16.—Diagram illustrating Hauck's method 643
No. 17.—Diagram illustrating use of the line of intersection of two picture planes 644
No. 18.—Diagram illustrating application of Hauck's method to vertical picture planes 645
No. 19.—Diagrams illustrating the plotting of a figure situated in horizontal plane on the ground plan by means of the perspective view of the figure 646
No. 20. 647
No. 21. 648
No. 22. 648
No. 23. 649
No. 24. 649
No. 25. 650
No. 26. 650
No. 27.—Diagram 651
No. 28.—Diagram 652
No. 29.—Diagram 652
No. 30.—Diagram showing photograph on an inclined plate 654
No. 31.—Diagram showing the platting of the picture trace of an inclined plate 655
No. 32.—Diagrams showing the determination of altitudes of points pictured on inclined plates 656
No. 33. 657
No. 34.—Diagram showing application of Hauck's method to inclined picture planes 658
No. 35.—Diagram showing Jordan's method 659
No. 36.—Diagram showing Le Bon's method 661
No. 37.—Diagram showing Le Bon's method 661
No. 38.—Diagram showing Paganini's method 662
No. 39.—Diagram showing Paganini's method 662
No. 40.—Diagram showing Paganini's method 663
No. 41.—Diagram showing Paganini's method 665
No. 42.—Diagram showing Paganini's method 666
No. 43.—Diagram showing Hafferl's method 668
No. 44.—Diagram showing arithmetical method for vertical picture planes 669
No. 45.—Diagram illustrating application of Hauck's method 670
No. 46.—Diagram illustrating general arithmetical method for inclined picture planes 671
No. 47.—Diagram 672
No. 48.—Diagram showing the orienting of the picture trace, analytic method 673
No. 49.—Diagram illustrating Laussedat's method 675
No. 50.—Diagram illustrating Laussedat's method 675
No. 51.—Diagram illustrating Laussedat's method 676
No. 52.—Diagram illustrating Laussedat's method for determination of elevations 676

Page.
No. 53.—Diagram illustrating Meydenbaur's method ... 678
No. 54.—Diagram illustrating Meydenbaur's method ... 678
No. 55.—Diagram illustrating Meydenbaur's method ... 679
No. 56.—Diagram illustrating Meydenbaur's method ... 680
No. 57.—Diagram illustrating Meydenbaur's method ... 681
No. 58.—Diagram illustrating Deville's method ... 683
No. 59.—Diagram illustrating Deville's method ... 684
No. 60.—Diagram illustrating Deville's method ... 684
No. 61.—Diagram illustrating Deville's method ... 685
No. 62.—Diagram illustrating Deville's method ... 686
No. 63.—Diagram illustrating Deville's method ... 687
No. 64.—Diagram illustrating Deville's method ... 687
No. 65.—Diagram showing the platting of geodetic points iconometrically by vertical intersections ... 688
No. 66.—Diagram ... 689
No. 67.—Diagram showing use of sector in determining elevations ... 690
No. 68.—Diagram of scale of heights ... 690
No. 69.—Diagram of scale of heights ... 690
No. 70.—Diagram of photograph board ... 691
No. 71.—Diagram illustrating use of Deville's photograph board ... 692
No. 72.—Diagram illustrating use of Deville's photograph board ... 693
No. 73.—Diagram illustrating use of Deville's photograph board ... 694
No. 74.—Diagram illustrating use of Deville's photograph board ... 695
No. 75.—Diagram of photograph protractor ... 696
No. 76.—Diagram showing Legros's method for locating the horizontal line of a vertically exposed plate ... 697
No. 77.—Werner's surveying camera ... 700
No. 78.—Surveying camera of Doergens & Vogel ... 700
No. 79.—Rear view of Werner's surveying camera ... 700
No. 80.—Meydenbaur's small magazine camera ... 700
No. 81.—Meydenbaur's small magazine camera ... 700
No. 82.—Deville's (Canadian) surveying camera ... 701
No. 83.—Deville's (Canadian) surveying camera ... 701
No. 84.—Section of Deville's surveying camera ... 701
No. 85.—Section of Deville's surveying camera ... 701
No. 86.—Triangular supporting piece for camera ... 702
No. 87.—Graduation of level for Canadian camera ... 702
No. 88.—Diagram, adjusting of cross levels of Canadian camera ... 702
No. 89.—Diagram, adjusting of cross levels of Canadian camera ... 703
No. 90.—Diagram ... 703
No. 91.—Graduated metal frame of Canadian camera ... 704
No. 92.—Diagram ... 704
No. 93.—Canadian packing case for exposed plates ... 706
No. 94.—Paganini's new phototheodolite ... 707
No. 95.—Paganini's new phototheodolite ... 708
No. 96.—Paganini's new phototheodolite (rear view) ... 709
No. 97.—Diagram ... 710
No. 98.—Section of Paganini's surveying camera ... 710
No. 99.—Finsterwalder's photogrammetric theodolite ... 711
No. 100.—Ney's phototheodolite for precise work ... 713
No. 101.—Ney's phototheodolite for precise work ... 713
No. 102.—Koppe's phototheodolite ... 715
No. 103.—Koppe's packing case and dark chamber ... 715
No. 104.—Pollack's phototheodolite ... 716
No. 105.—Laussedat's new magazine phototheodolite ... 717
No. 106.—Laussedat's surveying camera ... 717
No. 107.—Phototheodolite of Starke & Kammerer ... 718
No. 108.—Phototheodolite of Starke & Kammerer ... 719
No. 109.—Phototheodolite of Starke & Kammerer ... 720
No. 110.—Phototheodolite of Starke & Kammerer ... 720
No. 111.—Phototheodolite of Starke & Kammerer ... 720
No. 112.—Hubl's plane-table photogrammeter ... 721
No. 113.—Hubl's plane-table photogrammeter ... 721
No. 114.—Moessard's topographic cylindrograph ... 723

Page.
No. 115.—Diagram 723
No. 116.—Diagram 724
No. 117.—The centrolinead 725
No. 118.—Diagram 726
No. 119.—Diagram 727
No. 120.—Diagram 727
No. 121.—The perspectometer 728
No. 122.—Diagram 730
No. 123.—Diagram 730
No. 124.—Ritter's perspectograph 731
No. 125.—Diagram 732
No. 126.—Hauck's trikolograph 732
No. 127.—Hauck's trikolograph 734

TO APPENDIX NO. 11.

No. 1.—Diagram of duplex bar 740
No. 2.—Diagram of mode of measure 742
No. 3.—Duplex bars in contact, face down 752
No. 4.—View of duplex bars with aligning telescope sighting in direction of measurement 752
No. 5.—Duplex bar No. 15 on its trestles 752
No. 6.—The duplex base apparatus, horizontal section of bar 752

TO APPENDIX NO. 12.

No. 1.—Diagram of base figure or net 775
No. 2.—Diagram showing mode of measurement 764
No. 3.—Diagram showing disposition of party and apparatus under shelter shed during measurement 775
No. 4.—Duplex bar No. 15 on its trestles 775
No. 5.—Duplex bars in contact, face down 775
No. 6.—View of the duplex bars with aligning telescope sighting in direction of measurement 775
No. 7.—Beginning of the measurement 775
No. 8.—Crossing a railway embankment 775
No. 9.—Transferring the measurement to the ground mark 775
No. 10.—Topographical sketch and profile of the base line 775

APPENDIX NO. 1—1897.

DISTRIBUTION OF THE MAGNETIC DIP AND MAGNETIC INTENSITY IN THE UNITED STATES FOR THE EPOCH JANUARY 1, 1900.

[SECOND EDITION, WITH THREE CHARTS.]

By CHARLES A. SCHOTT, Assistant.

Submitted for publication May 20, 1897.

Blank page retained for pagination

APPENDIX NO. I—1897.

DISTRIBUTION OF THE MAGNETIC DIP AND THE MAGNETIC INTENSITY IN THE UNITED STATES, FOR THE EPOCH JANUARY 1, 1900.

[Second edition with three charts.]

By CHARLES A. SCHOTT, *Assistant.*
Submitted for publication May 20, 1897.

Introduction.—During the past eleven years, since the publication of the first edition of the paper[1] on the secular variation and geographical distribution of the magnetic dip and intensity in the United States, many records of observations have accumulated, particularly in localities not hitherto visited by observers, and our former extremely meager information respecting the annual change of the dip and of the intensity has given place to a somewhat better understanding of the changes now going on in the distribution of the direction and intensity of the magnetic force within our boundaries. The need of a new edition of the paper was thus indicated.

The intensities are now expressed in C. G. S. units; this system was introduced on the Survey in 1882, but in preparing the last edition of the distribution of the intensities (horizontal and total component) the older English units[2] were still adhered to as it was then found more convenient for the collection, coordination, and discussion of the older observations. This state of things no longer exists.

Collection and tabulation of observed dips and intensities.—In the present table I have brought together the results at all stations where either the dip or the intensity or both have been observed, but at every place only the most recent results have been admitted. For special reference to locality or source from which information has been obtained, see the first edition (App. 6, Rep. 1885); stations not contained in that collection have been since added, and particulars are on record in the Survey Office. The political subdivisions (by States), and the order of arrangement of stations by increasing latitudes are the same as in the first edition and in conformity with the paper on the "Distribution of the magnetic declination in the United States, etc.,"[3] which makes it quite easy to identify or compare any station contained in that paper and in the present collection.

The density of distribution of dip and intensity stations is, like that of declination, extremely irregular, as may be seen from the following table giving the number of stations in each State or other geographic division:

Alabama	14	Arkansas	2	Connecticut	19
Alaska	68	California	64	Delaware	8
Arizona	69	Colorado	15	District of Columbia	7

[1] Magnetic dip and intensity with their secular variation and geographical distribution in the United States. Appendix No. 6—Report for 1885. Washington, 1886; 146 pages with 3 plates.

[2] To convert results expressed in F. G. S. units into C. G. S. units multiply them by 0·0461080; its log. is [8·663776].

[3] Appendix No. 1, Report for 1896.

Florida	23	Minnesota	11	Oregon	19
Georgia	24	Mississippi	13	Pennsylvania	39
Idaho	5	Missouri	82	Rhode Island	7
Illinois	28	Montana	18	South Carolina	11
Indiana	12	Nebraska	15	South Dakota	4
Indian Territory	2	Nevada	29	Tennessee	17
Iowa	24	New Hampshire	16	Texas	40
Kansas	15	New Jersey	24	Utah	30
Kentucky	22	New Mexico	21	Vermont	9
Louisiana	27	New York	64	Virginia	37
Maine	66	North Carolina	33	Washington	36
Maryland	26	North Dakota	6	West Virginia	6
Massachusetts	39	Ohio	44	Wisconsin	16
Michigan	27	Oklahoma	0	Wyoming	18

West India Islands	19
Mexico and Central America	78
Dominion of Canada to longitude 75° W	39
Same between longitudes 75° and 90° W	72
British Possessions south of latitude 51° and west of longitude 90° W	54
Same north of latitude 51° and west of longitude 90° W	90
Eastern Siberia	18
Total number of magnetic dip and intensity stations within the United States	1 271
Total number of stations tabulated	1 641

Arrangement of the table.—It contains the observed values as well as the corresponding values for the epoch 1900·0, whenever means were available for reduction to that common epoch; if this could not be effected it is indicated by a blank space to be filled in hereafter when an adequate knowledge of the secular variation shall have been acquired. The first column gives the name[1] of the place, in italics when a secular variation station, the second and third the coordinates of position which have been put in accord with the best or latest information in our possession; they are given to the nearest whole minute of arc, an accuracy quite sufficient for our purpose. The longitudes count (positive) from Greenwich westward to 180°; when counted eastward, which is the case for a few stations, the letter E is attached. The columns headed θ, H, F require no explanation. The values in the next two columns θ_{1900} and H_{1900} are derived from the preceding corresponding values by application of the effect of the secular change for the number of years between 1900 and the year of observation. The annual variations are taken directly from the discussion contained in Appendix No. 1, Report for 1895. In case of a secular variation station the latest observed values are set down but the referred values for January, 1900, were taken from the analytical expression whenever established in the above appendix. In presenting the values for the year 1900 it is felt and understood that they are necessarily weak and may in some instances appear stretched as to extension in time, since most of the secular change expressions involve but the first power of the (elapsed) time. We can not insure the fourth place of decimals in the values of H, V, and F for 1900, and it is only carried in order to secure the third place figures. To wait until the reduction to epoch 1900 could be accurately effected for all our observations would be to defeat the object for which this paper has been prepared and would deprive us for many years of useful information. The values of V_{1900} and F_{1900} were computed from the corresponding values of θ_{1900} and H_{1900}.

The last column of the table contains the observer's name and will serve for reference to particulars either as given in Appendix No. 6, Report for 1885, or, in case of a later date, in the record of the observation on file at the office of the Survey.

Construction of the isomagnetic charts of the United States for the epoch January 1, 1900.—The three isomagnetic charts accompanying this paper show for the common epoch January 1, 1900, and within the compact area of the United States, the distribution of the dip or isoclinic chart and of the intensity or isodynamic charts for the horizontal component and the total force. The scale of these charts is the same as used for the isogonic curves and the same as in the first or 1885

[1] Attention was paid to the spelling, to be in accordance with the decisions of the United States Board on Geographical Names, established in 1890.

edition, viz, $\frac{1}{7\,000\,000}$. The vertical force component has not been charted, as it is of less importance. The respective values of θ, H, and F for 1900, as given in the table, were plotted on the large scale base maps and the curves of equal values were constructed graphically. For the plotting of the respective values I am indebted to Mr. F. W. Clay of the computing division.

The isoclinic chart contains, besides the curves of equal dip for intervals of 2°, a central region or belt where for the period 1890–1900 the annual change is either zero or very small. On the 1885 chart a similar belt of no annual change was shown much in the same position as now, but any actual shift of the position within the last ten or fifteen years is still masked by the uncertain position it had at the earlier date. A first attempt has also been made to introduce curves of equal annual change (for the epoch 1900), lines for $-3'$, $-2'$, $-1'$, $0'$, $+1'$, $+2'$, and $+3'$ being given. Their positions, however, are still more or less doubtful or conjectural, yet they will serve for reducing the dip to any other than the epochal year within a certain small number of years.

The first isodynamic chart exhibits the distribution of the horizontal component of the magnetic force. It depends on the tabular values of H_{1900}, and the curves of equal value were constructed graphically, their common difference being 0·020 of a dyne. To facilitate the reduction of any graphical value to another epoch, withing the limit of a few years, there is likewise shown a belted area of little or no annual change during 1890–1900 and several dotted curves indicating the annual increase or decrease of the horizontal intensity, as the case may be. Compared with the region of no change shown on the 1885 chart, the present position is considerably to the north of it but the location at the earlier date is very uncertain. The position of the curves of equal annual change is given for the first time, but this part of the representation is necessarily weak.

The second isodynamic chart gives the distribution of the total magnetic force within the compact limits of the United States; it is based upon the tabular values of F_{1900} and was constructed in the same manner as the preceding chart. It was thought unnecessary to present with this paper also a chart of V_{1900}, or of the distribution of the vertical force, since this component can readily be deduced for any locality from the data given. It is to be hoped that at the time new magnetic charts become desirable our knowledge of the secular variation of θ and H will have so far advanced as not only to give greatly increased precision to the results for the new epoch, but to include among its values many of the observations which could not be brought forward to the epoch of the present paper.

For the effective study of the local deflections of the magnetic force, in direction and intensity, at places of irregular distribution, our data are far from being sufficient to make the attempt of the analysis at this date profitable.

Collection of the most recent magnetic dips and intensities observed in the United States and referred to the epoch 1900·0.

ALABAMA.

Name of station.	Lat.	Long.*	Date.	Dip θ.	Hor. force H.	Total force F.	θ_{1900}	H_{1900}	V_{1900}	F_{1900}	Observer.
	° ′	° ′		° ′			° ′				
Fort Morgan.	30 14	88 01	1847·38	. .	0·2867	. .	. .	. .	. .	. .	R. H. Fauntleroy and J. S. Ruth.
Mobile.	30 42	88 03	1896·17	60 57·6	·2730	0·5623	60 56	0·2719	0·4893	0·5597	J. B. Baylor.
Citronelle.	31 05	88 14	1896·19	61 23·1	·2694	·5625	61 21	·2684	·4912	·5598	"
Greenville.	31 50	86 36	1896·20	62 18·9	·2634	·5669	62 15	·2628	·4995	·5644	"
Lower Peach Tree.	31 50	87 33	1857·33	62 16·8	·2755	·5923	61 56	. .	. .	. .	G. W. Dean.
Eufaula.	31 54	85 08	1896·23	62 47·6	·2575	·5632	62 44	·2570	·4986	·5610	J. B. Baylor.
Montgomery.	32 22	86 18	1896·21	62 38·1	·2633	·5728	62 34	·2627	·5060	·5702	"
Selma.	32 24	87 05	1896·22	62 42·0	·2641	·5758	62 39	·2635	·5094	·5736	"
Opelika.	32 37	85 25	1896·25	63 24·5	·2570	·5741	63 20	·2564	·5105	·5712	"
Tuscaloosa.	33 12	87 42	1835·5	64 22	. .	. .	. .	. .	. .	. .	J. N. Nicollet.
Indian Mtn.	34 02	85 26	1875·65	65 09·5	·2517	·5991	64 40	·2487	·5254	·5813	F. P. Webber.
Decatur.	34 37	86 59	1881·66	65 35·2	·2449	·5926	65 13	·2427	·5255	·5789	J. B. Baylor.
Huntsville.	34 44	86 35	1890·42	65 56·6	·2397	·5879	65 45	·2386	·5297	·5811	"
Florence.	34 48	87 43	1890·41	65 30·6	0·2415	0·5826	65 19	0·2400	0·5222	0·5746	"

* Longitudes are counted from Greenwich westward to 180°; when counted eastward the letter E is prefixed.

Collection of the most recent magnetic dips and intensities observed in the United States and referred to the epoch 1900·0—Continued.

ALASKA.

Name of station.	Lat.	Long.	Date.	Dip θ.	Hor. force H.	Total force F.	θ_{1900}	H_{1900}	V_{1900}	F_{1900}	Observer.
	° ′	° ′		° ′			° ′				
Kyska Harbor.	51 59	E 177 30	1873·55	65 01·3	. .	. .	. .	. .	. .	. .	W. H. Dall.
Chichagof Hbr., Attu Id.	52 56	E 173 12	1873·49	65 10·6	. .	. .	. .	. .	. .	. .	"
Chernofsky Bay, Unalaska Island.	53 24	167 30	1880·75	67 13·8	0·2095	0·5414	66 50	0·2059	0·4811	0·5235	W. H. Dall & M. Baker.
Amaknak Id., Iliuliuk Hbr., Unalaska Id.	53 53	166 32	1896·33	67 02·6	·2057	·5275	66 58	·2064	·4854	·5274	O. B. French.
South Base, Portland Canal.	54 46	130 24	1888·58	74 34·6	·1622	·6099	74 26	·1634	·5866	·6089	A. N. Wood.
Howcan Mission, Kaigani Straits.	54 50	132 50	1881·66	74 21·5	·1754	·6506	. .	. .	. .	. .	H. E. Nichols.
Little Koniushi, NW. Hbr., Shumagin Ids.	55 03	159 24	1880·54	69 30·3	·1936	·5528	. .	. .	. .	. .	W. H. Dall & M. Baker.
Tamgas Hbr, Gravina Islands.	55 04	131 28	1883·58	74 28·2	·1604	·5989	. .	. .	. .	. .	H. E. Nichols.
Belkofsky settlement, Dolgoi Island.	55 05	162 00	1880·56	69 16·2	·1933	·5461	. .	. .	. .	. .	W. H. Dall & M. Baker.
Mary Island.	55 06	131 14	1895·54	74 28·2	·1593	·5950	74 25	·1598	·5731	·5948	O. B. French.
Bay, Portland Canal.	55 13	130 04	1888·66	75 14·2	·1579	·6197	75 06	·1591	·5980	·6187	A. N. Wood.
Popof Isd., Humboldt Hbr, Shumagins.	55 19	160 31	1880·55	69 28·8	·1940	·5534	. .	. .	. .	. .	W. H. Dall & M. Baker.
Wards Cove, Pen Isd., Tongas Narrows.	55 23	131 44	1885·61	74 46·8	·1560	·5941	. .	. .	. .	. .	R. A. Marr.
Kasaan Bay, Prince of Wales Archipelago.	55 30	132 19	1880·36	73 58	. .	. .	. .	. .	. .	. .	W. H. Dall & M. Baker.
Union Bay.	55 45	132 12	1885·60	73 33·2	·1669	·5896	73 23	·1686	·5650	·5896	R. A. Marr.
Head of Portland Canal.	55 56	130 00	1888·52	75 24·4	·1545	·6130	75 16	·1557	·5921	·6122	A. N. Wood.
Burroughs Bay, Unuk River.	56 02	131 06	1893·39	75 17·7	·1531	·6031	75 13	·1538	·5828	·6027	H. W. Edmonds.
Shakan, Prince of Wales Islands.	56 09	133 38	1881·63	74 49·7	·1565	·5980	. .	. .	. .	. .	H. E. Nichols.
Fort Wrangell.	56 28	132 23	1893·48	75 17·0	·1515	·5964	75 12	·1523	·5762	·5961	G. R. Putnam & A. L. Baldwin.
East Base, Duncan Canal.	56 36	133 06	1887·58	75 14·0	·1555	·6099	75 06	·1569	·5896	·6100	C. C. Marsh.
Hot Springs Bay, Sitka Sound.	56 52	135 20	1880·44	75 01·9	·1542	·5971	. .	. .	. .	. .	W. H. Dall & M. Baker.
South Base, Frederick Sound.	56 55	132 51	1887·43	75 28·8	·1536	·6125	75 20	·1550	·5923	·6120	C. C. Marsh.
Portage Bay, Frederick Sound.	57 00	133 20	1887·50	75 15·2	·1551	·6094	75 06	·1565	·5882	·6085	"
Sitka, Parade Ground.	57 03	135 20	1896·54	74 59·7	·1537	·5937	74 58	·1535	·5713	·5915	F. Morse.
St. George } Pribilof	56 36	169 32	1897·69	69 54·1	·1877	·5462	. .	. .	. .	. .	G. R. Putnam.
St. Paul } Islands.	57 07	170 16	1897·53	70 24·2	·1838	·5480	. .	. .	. .	. .	"
Woewodsky, opposite Port Townsend.	57 10	134 15	1889·48	75 36	·1525	·6135	75 29	·1536	·5932	·6128	A. N. Wood.
Cape Fanshaw.	57 11	133 34	1887·53	75 30·4	·1538	·6146	75 22	·1552	·5944	·6144	C. C. Marsh.
Cleveland Passage.	57 12	133 30	1889·34	75 37	·1538	·6191	75 30	·1550	·5992	·6190	A. N. Wood.
Poke.	57 27	133 50	1889·52	75 40	·1511	·6099	75 33	·1522	·5906	·6099	"
Killisnoo.	57 27	134 30	1895·68	76 38·0	·1421	·6149	76 35	·1426	·5977	·6146	R. F. Lopez.
Povorotny, Peril Strait.	57 28	135 28	1880·38	75 03·4	. .	. .	. .	. .	. .	. .	W. H. Dall & M. Baker.
Clot, Holkham Bay.	57 41	133 28	1889·72	75 54	·1485	·6096	75 47	·1496	·5906	·6092	A. N. Wood.
Marble Bluff, Chatham Strait.	57 45	134 44	1880·39	75 57·3	. .	. .	. .	. .	. .	. .	W. H. Dall & M. Baker.
St. Paul, Kadiak Isd.	57 48	152 24	1896·44	72 19·8	·1719	·5663	72 16	·1724	·5391	·5659	H. P. Ritter.
North Base, Stephen Passage.	58 00	134 04	1888·35	75 46·8	. .	. .	75 38	. .	. .	. .	A. N. Wood.
Near Point Marsden, Admiralty Inlet.	58 05	134 49	1880·39	76 02·1	·1440	·5968	. .	. .	. .	. .	W. H. Dall & M. Baker.
Port Althorp, Cross Sd.	58 12	136 24	1880·46	75 22·3	·1512	·5986	. .	. .	. .	. .	"
Auke Point.	58 12	134 33	1890·48	75 58	·1473	·6076	75 51	·1483	·5882	·6067	H. C. Poundstone.
Cross Sound.	58 12	136 05	1794·5	78 58·5	. .	. .	. .	. .	. .	. .	G. Vancouver.
Funter Bay.	58 14	134 55	1890·65	76 04	·1459	·6059	75 57	·1469	·5870	·6052	H. C. Poundstone.
Pt. Lena, Lynn Canal.	58 24	134 46	1890·41	76 03	0·1469	0·6095	75 56	0·1479	0·5903	0·6085	"

Collection of the most recent magnetic dips and intensities observed in the United States and referred to the epoch 1900·0—Continued.

ALASKA—Continued.

Name of station.	Lat.	Long.	Date.	Dip θ.	Hor. force H.	Total force F.	θ_{1900}	H_{1900}	V_{1900}	F_{1900}	Observer.
	° ′	° ′		° ′			° ′				
Taku River, ast. st'n.	58 26	133 59	1893·56	76 09·8	0·1429	0·5975	76 05	0·1435	0·5790	0·5967	O. B. French.
Pt. Whidbey, Lynn Canal.	58 36	135 15	1880·40	76 27·3	. .	. .	. .	. .	. .	. .	W. H. Dall & M. Baker.
Lituya Bay, Port Français.	58 39	137 30	1786·5	73 52	. .	. .	. .	. .	. .	. .	J. F. G. de la Perouse.
Camp Muir, GlacierBay.	58 50	136 05	1890·67	75 51	·150	·614	75 45	·151	·5946	·6135	H. F. Reid.
Seduction Island, Lynn Canal.	59 00	135 22	1880·41	76 44·3	. .	. .	. .	. .	. .	. .	W. H. Dall & M. Baker.
Anchorage Pt., Chilkat Inlet.	59 10	135 28	1894·56	75 22·8	·1519	·6018	75 19	·1525	·5819	·6016	J. F. Hayford.
Kohklux, Chilkat River.	59 24	135 53	1869·59	75 44	·1520	·6031	. .	. .	. .	. .	G. Davidson.
Khantaak Isd., Port Mulgrave, Yakutat Bay.	59 34	139 47	1892·67	76 11·5	·1422	·5957	76 08	0·1427	0·5781	0·5954	J. H. Turner.
Coal Pt., Cook Inlet.	59 36	151 24	1880·49	73 59·6	·1597	·5793	. .	. .	. .	. .	W. H. Dall & M. Baker.
Chalmer Haven.	60 16	147 20	1794·5	77 08·5	. .	. .	. .	. .	. .	. .	G. Vancouver.
St. Michael, Norton Sd.	63 29	162 01	1891·32	75 05·0	·1474	·5729	. .	. .	. .	. .	H.W. Edmonds.
Norton Bay.	64 31	162 47	1778·5	76 25	. .	. .	. .	. .	. .	. .	J. Cook.
Camp Davidson, Yukon River.	64 41	140 54	1891·22	78 33·9	·1173	·5918	. .	. .	. .	. .	J. E. McGrath.
Port Clarence.	65 16	166 51	1880·68	76 04·0	·1393	·5786	. .	. .	. .	. .	W. H. Dall & M. Baker.
Chamisso Harbor, Kotzebue Sound.	66 13	161 49	1880·66	77 17·4	·1287	·5849	. .	. .	. .	. .	"
Fort Yukon.	66 34	145 18	1890·61	79 37·8	·1070	·5944	. .	. .	. .	. .	H.W. Edmonds.
Camp Colonna, Porcupine River.	67 25	140 59	1890·46	80 36·9	·0972	·5961	. .	. .	. .	. .	"
Near Cape Lisburne.	68 53	166 05	1880·64	78 53·0	·1134	·5883	. .	. .	. .	. .	W. H. Dall & M. Baker.
On ice near Nuwnak.	70 09	143 50	1851·5	82 58	. .	. .	. .	. .	. .	. .	R. Collinson.
Sandy Beach, near Icy Cape.	70 13	162 15	1880·65	80 07·8	·1012	·5906	. .	. .	. .	. .	W. H. Dall & M. Baker.
Foggy Island.	70 16	147 38	1825·5	82 26	. .	. .	. .	. .	. .	. .	J. Franklin.
Near Pt. Belcher.	70 47	159 40	1880·65	80 52·6	·0938	·5919	. .	. .	. .	. .	W. H. Dall & M. Baker.
Uglaamie, Point Barrow.	71 18	156 40	1882·75	81 23·4	0·0893	0·5963	. .	. .	. .	. .	P. H. Ray & 5 observers.
Plover Pt., Pt. Barrow.	71 21	156 16	1854·5	81 36	. .	. .	. .	. .	. .	. .	R. Maguire.
Point Barrow, extreme point.	71 23	156 20	1881·6	81 18	. .	. .	. .	. .	. .	. .	U. S. Revenue Marine.
On ice north and east of Point Barrow.	71 26	147 26	1851·5	83 05	. .	. .	. .	. .	. .	. .	R. Collinson.
On ice, Arctic Ocean.	71 27	155 14	1851·5	82 29	. .	. .	. .	. .	. .	. .	"

ARIZONA.

Santa Cruz River.	31 18	110 31	1855·37	57 28	0·2844	0·5289	. .	. .	. .	. .	W. H. Emory.
San Bernardino.	31 20	109 14	1855·32	57 19	·2883	·5339	. .	. .	. .	. .	"
Nogales.	31 20	110 56	1892·30	57 49·1	·2819	·5293	57 49	0·2787	0·4428	0·5232	O. B. French.
Station 45.	32 41	114 05	1851	58 25	. .	. .	. .	. .	. .	. .	W. H. Emory & T. W. Chandler.
Yuma, near Gila Junct.	32 43	114 37	1892·21	58 42·9	0·2767	0·5328	58 43	0·2735	0·4502	0·5267	O. B. French.
Station 44.	32 44	113 50	1851	58 30	. .	. .	. .	. .	. .	. .	W. H. Emory & T. W. Chandler.
" 43.	32 49	113 33	"	58 43	. .	. .	. .	. .	. .	. .	"
" 1.	32 50	109 34	"	59 19	. .	. .	. .	. .	. .	. .	"
" 2.	32 50	109 37	"	59 12	. .	. .	. .	. .	. .	. .	"
" 3.	32 53	109 44	"	59 12	. .	. .	. .	. .	. .	. .	"
" 4.	32 57	109 49	"	59 20	. .	. .	. .	. .	. .	. .	"
" 42.	32 58	113 11	"	59 17	. .	. .	. .	. .	. .	. .	"
" 20.	32 59	110 40	"	59 11	. .	. .	. .	. .	. .	. .	"
" 39.	32 59	112 43	"	58 49	. .	. .	. .	. .	. .	. .	"

Collection of the most recent magnetic dips and intensities observed in the United States and referred to the epoch 1900·0—Continued.

ARIZONA—Continued.

Name of station.	Lat.	Long.	Date.	Dip. θ.	Hor. force H.	Total force F.	θ_{1900}	H_{1900}	V_{1900}	F_{1900}	Observer.
	° ′	° ′		° ′			° ′				
Station 38.	33 00	112 39	1851	58 53	. .	. .	. .	. .	. .	. .	W. H. Emory & T. W. Chandler.
" 28.	33 01	111 23	"	59 16	. .	. .	. .	. .	. .	. .	"
" 40.	33 02	112 55	"	59 16	. .	. .	. .	. .	. .	. .	"
" 21.	33 03	110 46	"	58 59	. .	. .	. .	. .	. .	. .	"
" 27.	33 03	111 16	"	59 20	. .	. .	. .	. .	. .	. .	"
" 5.	33 04	109 55	"	59 27	. .	. .	. .	. .	. .	. .	"
" 26.	33 04	111 11	"	59 25	. .	. .	. .	. .	. .	. .	"
" 29.	33 04	111 34	"	59 06	. .	. .	. .	. .	. .	. .	"
" 19.	33 05	110 35	"	59 05	. .	. .	. .	. .	. .	. .	"
" 22.	33 05	110 50	"	59 13	. .	. .	. .	. .	. .	. .	"
" 6.	33 06	110 00	"	59 38	. .	. .	. .	. .	. .	. .	"
" 24.	33 06	111 02	"	59 20	. .	. .	. .	. .	. .	. .	"
" 23.	33 07	110 55	"	59 23	. .	. .	. .	. .	. .	. .	"
" 30.	33 08	111 44	"	59 06	. .	. .	. .	. .	. .	. .	"
" 12.	33 09	110 26	"	59 37	. .	. .	. .	. .	. .	. .	"
" 13.	33 09	110 28	"	58 58	. .	. .	. .	. .	. .	. .	"
" 15.	33 09	110 31	"	59 28	. .	. .	. .	. .	. .	. .	"
" 32.	33 09	111 57	"	59 22	. .	. .	. .	. .	. .	. .	"
" 7.	33 10	110 03	"	59 42	. .	. .	. .	. .	. .	. .	"
" 31.	33 10	111 54	"	59 28	. .	. .	. .	. .	. .	. .	"
" 8.	33 12	110 10	"	59 37	. .	. .	. .	. .	. .	. .	"
" 10.	33 12	110 19	"	59 34	. .	. .	. .	. .	. .	. .	"
" 17.	33 12	110 42	"	59 23	. .	. .	. .	. .	. .	. .	"
" 9.	33 13	110 19	"	59 45	. .	. .	. .	. .	. .	. .	"
Williams River.	34 13	113 33	1854·13	60 08	0·2781	0·5584	. .	. .	. .	. .	J. C. Ives & A. W. Whipple.
Camp 123.	34 14	113 39	1854·13	60 10	·2768	·5565	. .	. .	. .	. .	"
Williams River.	34 17	113 26	1854·12	60 14	·2777	·5593	. .	. .	. .	. .	"
Camp 126.	34 17	113 56	1854·14	60 11	·2765	·5561	. .	. .	. .	. .	"
On Colorado River.	34 23	114 06	1854·14	60 34	·2739	·5574	. .	. .	. .	. .	"
Camp 129.	34 27	114 11	1854·14	60 35	·2740	·5579	. .	. .	. .	. .	"
Williams River.	34 32	113 28	1854·11	60 44	·2727	·5579	. .	. .	. .	. .	"
Williams River.	34 36	113 28	1854·11	60 36	·2730	·5561	. .	. .	. .	. .	"
Camp 130.	34 36	114 16	1854·15	60 30	·2747	·5579	. .	. .	. .	. .	"
" 132.	34 46	114 23	1854·15	60 48	·2724	·5584	. .	. .	. .	. .	"
" 135.	34 52	114 32	1854·16	60 57	·2723	·5607	. .	. .	. .	. .	"
Colorado Chiquito or Flax River.	34 53	110 04	1853·93	62 15	·2667	·5727	. .	. .	. .	. .	"
Pueblo Creek.	34 56	112 46	1854·06	61 13	·2726	·5662	. .	. .	. .	. .	"
Near Rio Puerco of the West.	34 58	109 52	1853·92	61 46	·2707	·5722	. .	. .	. .	. .	"
Williams River.	34 59	112 57	1854·06	61 06	·2730	·5648	. .	. .	. .	. .	"
On Colorado Chiquito.	35 00	110 25	1853·93	61 54	·2691	·5713	. .	. .	. .	. .	"
" " "	35 01	110 30	1853·94	61 41	·2706	·5704	. .	. .	. .	. .	"
Big Horse Spring.	35 01	113 36	1854·09	61 02	·2709	·5593	. .	. .	. .	. .	"
Near Lithodendron Cr.	35 02	109 41	1853·92	61 57	·2688	·5717	. .	. .	. .	. .	"
Jacobs Well.	35 04	109 14	1853·91	61 59	·2699	·5745	. .	. .	. .	. .	"
On Colorado Chiquito.	35 05	110 33	1853·95	61 44	·2699	·5699	. .	. .	. .	. .	"
Navajo Spring.	35 06	109 20	1853·91	61 58	·2702	·5750	. .	. .	. .	. .	"
Carriso Creek.	35 06	109 32	1853·92	62 05	·2687	·5740	. .	. .	. .	. .	"
Williams River.	35 07	113 13	1854·08	61 17	·2665	·5547	. .	. .	. .	. .	"
White Cliff Creek.	35 08	113 31	1854·09	60 48	·2755	·5648	. .	. .	. .	. .	"
On Colorado Chiquito.	35 12	110 37	1853·96	61 45	·2708	·5722	. .	. .	. .	. .	"
Head of White Cliff Cr.	35 12	113 21	1854·08	61 14	·2738	·5690	. .	. .	. .	. .	"
Saroux Spring.	35 17	111 39	1853·99	61 33	·2711	·5690	. .	. .	. .	. .	"
On Colorado Chiquito.	35 18	110 53	1853·96	61 55	·2691	·5717	. .	. .	. .	. .	"
" " "	35 21	110 56	1853·97	62 03	·2697	·5754	. .	. .	. .	. .	"
Cedar Creek.	35 21	112 20	1854·02	62 06	0·2688	0·5745	. .	. .	. .	. .	"

ARKANSAS.

Helena.	34 32	90 35	1890·37	64 33·3	0·2514	0·5852	64 26	0·2498	0·5222	0·5789	J. B. Baylor.
Little Rock.	34 44	92 16	1896·26	64 48·8	0·2466	0·5795	64 45	0·2460	0·5216	0·5766	G. R. Putnam.

Collection of the most recent magnetic dips and intensities observed in the United States and referred to the epoch 1900·0—Continued.

CALIFORNIA.

Name of station.	Lat.	Long.	Date.	Dip. θ	Hor. force H.	Total force F.	θ_{1900}	H_{1900}	V_{1900}	F_{1900}	Observer.
	° ′	° ′		° ′			° ′				
New River.	32 42	115 25	1849·5	58 19	. .	. .	. .	. .	. .	. .	W. H. Emory.
San Diego, La Playa.	32 42	117 14	1897·12	58 04·9	0·2789	0·5275	57 58	0·2754	0·4402	0·5193	O. B. French.
San Diego, City Park.	32 43	117 10	1892·10	58 01·6	·2795	·5278					G. R. Putnam.
Foster.	32 54	116 55	1897·13	58 50·0	·2726	·5268	58 50	·2718	·4494	·5252	O. B. French.
Santa Maria.	33 02	116 51	1849·5	58 42	. .	. .	. .	. .	. .	. .	W. H. Emory.
Santa Isabella.	33 08	116 41	1849·5	58 48	. .	. .	. .	. .	. .	. .	"
Oceanside.	33 12	117 24	1897·11	58 35·7	·2769	·5315	58 36	·2761	·4523	·5299	O. B. French.
Capistrano.	33 30	117 40	1897·11	59 00·5	·2745	·5332	59 00	·2737	·4555	·5314	"
Newport Beach.	33 36	117 55	1897·11	59 02·3	·2743	·5331	59 02	·2735	·4558	·5315	"
Elsinore.	33 40	117 20	1897·15	60 15·0	·2701	·5444	60 15	·2693	·4712	·5427	"
Indio.	33 43	116 12	1897·17	59 18·1	·2739	·5365	59 18	·2731	·4599	·5349	"
San Pedro.	33 44	118 17	1897·09	59 04·4	·2724	·5301	59 04	·2717	·4534	·5286	"
San Jacinto.	33 47	116 57	1897·15	59 22·8	·2729	·5357	59 23	·2721	·4598	·5343	"
Los Angeles Base SE.	33 47	117 57	1890·33	. .	·2746	. .	. .	·2720	. .	. .	J. J. Gilbert.
Dominguez Hill.	33 52	118 14	1870·21	58 49·2	·2792	·5395	58 49	·2708	·4474	·5230	S. R. Throckmorton.
Los Angeles Base NW.	33 55	118 04	1890·43	. .	·2730	. .	. .	·2704	. .	. .	I. Winston.
Santa Monica.	34 01	118 30	1897·08	59 15·8	·2726	·5334	59 15	·2720	·4572	·5320	O. B. French.
Los Angeles Mag'c. Obs.	34 03	118 15	1889·30	59 33·2	·2717	·5362	59 33	·2687	·4571	·5302	R. A. Marr.
Los Angeles Elysian Park.	34 04	118 15	1892·14	59 35·1	·2697	·5327	59 35	·2677	·4560	·5288	G. R. Putnam.
San Bernardino.	34 06	117 18	1897·07	59 40·4	·2717	·5381	59 40	·2709	·4630	·5364	O. B. French.
North Pomona.	34 06	117 45	1897·08	59 37·7	·2667	·5276	59 38	·2659	·4538	·5260	"
San Buenaventura.	34 16	119 16	1870·04	59 11·5	·2775	·5418	59 12	·2692	·4516	·5257	S. R. Throckmorton.
Santa Barbara.	34 25	119 42	1881·28	59 19·2	·2707	·5306	59 19	·2656	·4476	·5205	H. E. Nichols.
El Coxo, Pt. Conception.	34 27	120 27	1872·94	58 51·0	·2723	·5263	58 56	·2650	·4399	·5135	S. R. Throckmorton.
Bagdad.	34 35	115 53	1897·03	60 27·8	·2685	·5447	60 28	·2677	·4725	·5431	O. B. French.
Oro Grande.	34 35	117 20	1897·06	60 31·2	·2663	·5412	60 31	·2655	·4696	·5394	"
Santa Inez.	34 36	120 11	1831·4	60 53	·2683	·5515	. .	. .	. .	. .	D. Douglas.
La Purissima.	34 40	120 27	1831·4	60 53	·2669	·5482	. .	. .	. .	. .	"
Needles.	34 50	114 36	1895·18	60 56·1	·2647	·5449	60 56	·2622	·4718	·5396	E. Smith.
Barstow.	34 54	117 01	1897·03	60 35·2	·2648	·5391	60 35	·2640	·4682	·5375	O. B. French.
Blake.	34 55	115 04	1897·06	60 35·9	·2658	·5415	60 36	·2650	·4703	·5398	"
Kramer.	34 59	117 36	1897·02	60 27·0	·2654	·5381	60 27	·2646	·4667	·5365	"
Soda Lake.	35 03	115 59	1854·18	61 07	·2706	·5602	. .	. .	. .	. .	J. C. Ives and A. W. Whipple.
Piute Creek.	35 06	114 54	1854·17	61 10	·2704	·5607	. .	. .	. .	. .	"
Sand Camp.	35 06	115 46	1854·18	60 49	·2730	·5598	. .	. .	. .	. .	J. C. Ives and A. W. Whipple.
San Luis Obispo.	35 11	120 44	1881·29	60 30·0	·2689	·5461	60 30	·2638	·4663	·5357	H. E. Nichols.
Near Marl Spring.	35 11	115 33	1854·18	60 56	·2710	·5579	. .	. .	. .	. .	J. C. Ives and A. W. Whipple.
Manvel.	35 17	115 14	1897·04	61 21·5	·2641	·5509	61 22	·2633	·4823	·5495	O. B. French.
San Miguel.	35 45	121 00	1831·3	61 40	·2617	·5515	. .	. .	. .	. .	D. Douglas.
San Antonio.	36 01	121 18	1831·3	61 46	·2615	·5528	. .	. .	. .	. .	"
La Soledad.	36 24	121 24	1831·3	62 04	·2600	·5551	. .	. .	. .	. .	"
Mount Toro.	36 32	121 36	1885·09	. .	·2612	. .	. .	·2573	. .	. .	G. Davidson and F. Morse.
Monterey, near Redoubt.	36 36	121 54	1896·04	61 15·9	·2597	·5402	61 10	·2570	·4669	·5330	F. Morse.
Mount Bache or Loma Prieta.	37 07	121 51	1884·21	. .	·2578	. .	. .	·2537	. .	. .	G. Davidson and R. A. Marr.
Mount Hamilton, Lick Observatory.	37 20	121 38	1888·82	61 52·1	·2573	·5457	61 52	·2545	·4760	·5397	R. A. Marr.
Sierra Morena.	37 24	122 18	1884·04	. .	·2555	. .	. .	·2514	. .	. .	G. Davidson and R. A. Marr.
Mocho.	37 29	121 33	1887·66	. .	·2582	. .	. .	·2550	. .	. .	F. Morse.
San José.	37 32	122 00	1831·5	62 52	·2559	·5611	. .	. .	. .	. .	D. Douglas.
San Francisco, Presidio.	37 48	122 27	1896·02	62 28·3	·2522	·5457	62 23	·2486	·4751	·5362	F. Morse.
Mount Diablo.	37 53	121 55	1884·92	. .	·2555	. .	. .	·2517	. .	. .	G. Davidson and R. A. Marr.
Mount Conness.	37 58	119 19	1890·66	. .	·2416	. .	. .	·2394	. .	. .	I. Winston.
Mare Island Navy-Yard.	38 06	122 16	1887·28	62 23·0	·2610	·5630	62 23	0·2576	0·4924	0·5557	C. C. Marsh.
San Francisco Solano.	38 17	122 24	1831·5	63 24	·2521	·5634	. .	. .	. .	. .	D. Douglas.
Port Bodega.	38 18	123 02	1839·5	62 53·4	0·2508	0·5505	. .	. .	. .	. .	E. Belcher.
Bodego station.	38 18	123 00	1860·62	. .	·2563	. .	. .	. .	. .	. .	G. Davidson.

Collection of the most recent magnetic dips and intensities observed in the United States and referred to the epoch 1900·0—Continued.

CALIFORNIA—Continued.

Name of station.	Lat.	Long.	Date.	Dip θ.	Hor. force H.	Total force F.	θ_{1900}	H_{1900}	V_{1900}	F_{1900}	Observer.
	° ′	° ′		° ′			° ′				
Fort Romantsof, Bodega Head.	38 19	122 43	1818·7	65 30	. .	. .	. .	. .	. .	. .	V. M. Golovnin.
Vaca.	38 22	122 05	1880·90	. .	0·2525	. .	. .	0·2453	. .	. .	E. F. Dickins.
Sacramento, grounds of capitol.	38 36	121 29	1889·03	63 43·8	·2457	0·5552	63 44	·2416	0·4896	0·5459	R. A. Marr.
Monticello.	38 40	122 11	1880·79	63 14·2	·2499	·5549	63 14	·2427	·4810	·5388	J. J. Gilbert.
Point Arena.	38 54	123 42	1889·11	62 58·6	·2484	·5466	62 59	·2443	·4790	·5378	R. A. Marr.
Lake Tahoe, SE.	38 57	119 57	1895·83	63 48·8	·2450	·5551	63 49	·2434	·4950	·5516	C. H. Sinclair.
Marysville, Cortez sqr.	39 09	121 35	1889·15	63 43·5	·2452	·5540	63 44	·2417	·4897	·5461	R. A. Marr.
Blue Canyon.	39 15	120 47	1881·27	64 22·3	·2425	·5607	64 22	·2358	·4915	·5451	W. Eimbeck and R. A. Marr.
Cape Mendocino Light.	40 26	124 24	1886·27	64 23·7	0·2403	0·5560	64 24	0·2360	0·4926	0·5462	G. Davidson and F. Morse.

COLORADO.

Trinidad.	37 10	104 30	1888·85	64 59·8	0·2435	0·5762	64 54	0·2408	0·5140	0·5675	J. B. Baylor.
La Junta, near Eclipse station.	37 59	103 33	1878·56	66 02·3	·2433	·5990	65 52	·2381	·5315	·5824	T. E. Thorpe.
West Las Animas.	38 04	103 01	1888·81	66 17·6	·2374	·5905	66 16	·2348	·5340	·5834	J. B. Baylor.
Uncompahgre.	38 04	107 28	1895·64	66 23·2	·2380	·5942	66 21	·2370	·5412	·5907	R. L. Faris.
North Pueblo, near court-house.	38 18	104 37	1888·83	66 19·6	·2355	·5866	66 14	·2329	·5289	·5780	J. B. Baylor.
Ouray.	38 25	106 14	1894·57	67 24·1	·2361	·6144	67 21	·2348	·5626	·6096	R. L. Faris.
Gunnison C. H.	38 33	106 56	1886·46	66 39·8	·2352	·5937	66 33	·2320	·5348	·5830	E. Smith.
Colorado Springs.	38 50	104 49	1886·52	67 03·5	·2300	·5901	66 57	·2269	·5332	·5794	"
Pikes Peak.	38 50	105 03	1895·57	66 55·6	·2305	·5881	66 53	·2295	·5376	·5845	J. Nelson.
Manitou, near Navajo soda spring.	38 52	104 55	1878·59	66 59·2	·2335	·5974	66 48	·2285	·5331	·5801	T. E. Thorpe.
Chiquita.	38 55	108 39	1895·41	. .	·2349	. .	. .	·2338	. .	. .	W. Eimbeck.
Mt. Treasury.	39 00	107 06	1893·66	66 39·0	·2321	·5856	66 36	·2300	·5315	·5790	R. L. Faris.
Grand Junction.	39 04	108 34	1895·40	66 20·4	·2338	·5826	66 18	·2327	·5302	·5789	"
Tavaputs.	39 32	109 00	1891·80	66 40·0	·2338	·5903	66 36	·2319	·5359	·5838	P. A. Welker.
Denver.	39 45	104 59	1888·83	67 27·7	0·2269	0·5921	67 22	0·2243	0·5379	0·5828	J. B. Baylor.

CONNECTICUT.

Stamford.	41 04	73 32	1844·70	73 02·3	0·1791	0·6141	. .	. .	. .	. .	J. Renwick.
Norwalk.	41 07	73 25	1844·70	73 09·8	. .	. .	. .	. .	. .	. .	"
Bridgeport.	41 10	73 11	1845·71	73 21·3	·1723	·6017	. .	. .	. .	. .	"
Double Beach.	41 14	72 51	1884·55	72 50·4	·1793	·6076	72 04	0·1835	0·5670	0·5961	O. T. Sherman.
Lighthouse Point.	41 15	72 54	1884·49	72 46·1	·1797	·6067	72 00	·1839	·5659	·5951	"
Tashua.	41 16	73 15	1863·67	73 00·8	·1792	·6135	71 30	. .	. .	. .	S. H. Lyman and G. W. Dean.
Saybrook.	41 16	72 21	1845·63	74 33·8	·1643	·6173	. .	. .	. .	. .	J. Renwick.
New Haven, Oyster Pt.	41 17	72 56	1855·63	73 44·5	·1701	·6076					C. A. Schott.
Fort Wooster.	41 17	72 54	1848·64	74 12·6	·1668	·6129					J. S. Ruth.
New Haven, College.	41 19	72 56	1895·65	72 28·2	·1806	·5996	72 07	·1861	·5768	·6061	J. B. Baylor.
New London.	41 18	72 00	1845·62	72 57·9	. .	. .	. .	. .	. .	. .	J. Renwick.
Stonington.	41 20	71 54	1845·60	73 25·1	·1728	·6055	. .	. .	. .	. .	"
Wooster.	41 21	73 29	1864·6	73 24·6	·1760	·6165	71 54	. .	. .	. .	R. E. Halter.
Centerville.	41 23	72 54	1884·5	72 49·9	·1787	·6054	72 03	·1829	·5645	·5934	O. T. Sherman.
Sandford.	41 28	72 57	1862·75	73 33·3	·1777	·6278	72 00	. .	. .	. .	E. Goodfellow.
Hartford, Park station.	41 46	72 40	1890·78	73 06·0	·1748	·6014	72 46	0·1772	0·5714	0·5981	J. B. Baylor.
Box Hill.	41 48	72 27	1861·81	73 57·9	·1726	·6249	72 24	. .	. .	. .	G. W. Dean and R. E. Halter.
Ivy.	41 52	73 14	1863·5	73 32·0	·1748	·6169	72 01	. .	. .	. .	S. H. Lyman and G. W. Dean.
Bald Hill.	41 58	72 12	1861·70	73 47·5	0·1713	0·6136	72 12	. .	. .	. .	G. W. Dean and R. E. Halter.

Collection of the most recent magnetic dips and intensities observed in the United States and referred to the epoch 1900·0—Continued.

DELAWARE.

Name of station.	Lat.	Long.	Date.	Dip θ.	Hor. force H.	Total force F.	θ_{1900}	H_{1900}	V_{1900}	F_{1900}	Observer.
	° ′	° ′		° ′			° ′				
Dagsboro.	38 35	75 16	1856·66	71 03·1	0·2005	0·6174	. .	. .	. .	. .	C. A. Schott.
Pilottown.	38 47	75 10	1846·50	71 18·5	·1978	·6172	. .	. .	. .	. .	J. Locke.
Cape Henlopen Light-house.	38 47	75 05	1885·58	70 39·6	·1985	·5994	70 01	0·1999	0·5498	0·5851	J. B. Baylor.
Bombay Hook.	39 22	75 31	1846·46	71 39·5	·1937	·6155	. .	. .	. .	. .	J. Locke.
Delaware City.	39 35	75 36	1842·5	71 46	. .	. .	. .	. .	. .	. .	E. Barnett.
Fort Delaware.	39 35	75 34	1846·45	71 34·9	·1949	·6167	. .	. .	. .	. .	J. Locke.
Sawyer.	39 42	75 34	1846·42	71 57·5	·1925	·6215	. .	. .	. .	. .	"
Wilmington.	39 47	75 32	1875·54	71 24·0	0·2012	0·6308	70 43	0·2037	0·5822	0·6169	J. M. Poole.

DISTRICT OF COLUMBIA.

Washington, C. & G. S. office and adjacent stations.*	38 53	77 00	1896·37	69 58·4	0·2037	0·5948					Various observers and C. C. Yates in 1896.
Washington, U. S. Naval Obs'y, old site.	38 54	77 03	1891·50	71 05·0	·1985	·6125	69 54	0·2023	0·5527	0·5886	J. A. Hoogewerff and C. C. Marsh.
Washington, U. S. Naval Obs'y, Georgetown Heights.	38 55	77 04	1894·50	70 34·3	·1998	·6007					C. C. Marsh.
Washington, grounds of Smithsonian Inst.	38 53	77 02	1855·6	71 27·0	·2000	·6285	. .	. .	. .	. .	C. A. Schott.
Washington, near Patent Office.	38 54	77 01	1844·27	71 15·0	·1978	·6155	. .	. .	. .	. .	J. Locke.
Washington, near President's house.	38 54	77 02	1853·41	71 21·4	. .	. .	. .	. .	. .	. .	J. M. Gilliss.
Causten, Georgetown Heights, West Washington.	38 56	77 04	1855·69	71 30·2	0·1960	0·6178	. .	. .	. .	. .	C. A. Schott.

*On Capitol Hill, vicinity of Capitol and Congressional Library.

FLORIDA.

Sand Key.	24 27	81 53	1849·64	54 25·8	0·3116	0·5357	54 23	0·2974	0·4153	0·5107	J. E. Hilgard.
Key West, magnetic observatory and army hospital.	24 33	81 48	1896·12	54 24·6	·2992	·5141					G. R. Putnam.
Bird Key, Dry Tortugas.	24 37	82 54	1880·03	54 12·6	·3085	·5275	54 03	·3025	·4171	·5152	S. M. Ackley.
Cape Florida, Key Biscayne.	25 40	80 10	1850·15	56 13·0	·3050	·5485	. .	. .	. .	. .	J. E. Hilgard.
Hills, Hillsboro River.	26 16	80 05	1884·06	57 01·6	. .	. .	56 50	. .	. .	. .	B. A. Colonna.
Punta Rasa, Charlotte Harbor.	26 29	82 01	1866·50	57 12·3	·3035	·5604	56 52	. .	. .	. .	A. T. Mosman.
Fort Jupiter, near Light-house.	26 54	80 05	1880·19	57 38·5	·2895	·5408	57 23	·2866	·4479	·5318	J. B. Baylor.
House of Refuge No. 2, Indian River.	27 12	80 10	1883·22	57 43·8	·2879	·5395	57 30	·2855	·4481	·5314	B. A. Colonna.
Bell, Indian River.	27 28	80 20	1883·35	58 00·9	·2915	·5505	57 48	·2891	·4591	·5426	"
St. Lucie, Indian River, Fort Capron.	27 29	80 15	1880·17	58 16·8	·2903	·5522	58 01	·2874	·4603	·5426	J. B. Baylor.
Tampa.	27 57	82 27	1887·08	58 37·8	·2848	·5472	58 29	·2830	·4615	·5414	"
Eau Gallie, old agricultural college.	28 09	80 37	1880·15	58 52·1	·2881	·5572	58 32	·2852	·4659	·5463	"
Enterprise.	28 53	81 14	1880·13	60 07·5	·2791	·5603	59 48	·2763	·4747	·5493	"
Depot Key and Way Key, Cedar Keys; Transit of Venus station.	29 08	83 03	1887·12	59 52·7	·2768	·5517	59 41	·2750	·4702	·5448	"
Gainesville.	29 38	82 19	1887·13	60 39·2	·2723	·5555	60 26	·2705	·4768	·5483	"
Apalachicola.	29 43	84 59	1860·09	60 19·4	·2852	·5760	59 47	. .	. .	. .	G. W. Dean.
St. Augustine, near old fort.	29 54	81 19	1880·11	61 09·2	0·2732	0·5662	60 48	0·2705	0·4841	0·5546	J. B. Baylor.

Collection of the most recent magnetic dips and intensities observed in the United States and referred to the epoch 1900·0—Continued.

FLORIDA—Continued.

Name of station.	Lat.	Long.	Date.	Dip θ	Hor. force H.	Total force F.	θ_{1900}	H_{1900}	V_{1900}	F_{1900}	Observer.
	° ′	° ′		° ′			° ′				
Baldwin.	30 19	81 56	1887·06	61 19·5	0·2670	0·5564	61 05	0·2652	0·4799	0·5484	J. B. Baylor.
Jacksonville.	30 20	81 39	1880·10	61 43·2	·2701	·5700	61 21	·2674	·4895	·5577	"
Pensacola, Navy Yard.	30 21	87 16	1895·22	60 39·1	·2665	·5438	60 36	·2652	·4707	·5403	R. L. Faris.
Pensacola, public sq.	30 25	87 12	1861·02	60 38·9	·2836	·5786	60 16	. .	. .	. .	G. W. Dean.
Tallahassee.	30 26	84 17	1835·00	61 23	. .	. .	. .	. .	. .	. .	J. N. Nicollet.
Fernandina.	30 40	81 27	1879·10	61 53·6	0·2701	0·5733	61 28	0·2673	0·4916	0·5597	S. M. Ackley.

GEORGIA.

Dupont or Lawton.	30 58	82 47	1880·08	62 07·3	0·2693	0·5760	61 43	0·2670	0·4963	0·5635	J. B. Baylor.
Brunswick.	31 09	81 30	1887·16	62 31·9	·2595	·5626	62 15	·2582	·4907	·5546	"
Waycross.	31 11	82 30	1887·14	62 03·5	·2649	·5654	61 48	·2636	·4917	·5580	"
Butler.	31 18	81 21	1872·29	62 46·7	·2657	·5810	62 12	·2628	·4984	·5635	A. T. Mosman.
Jesup.	31 36	81 55	1887·16	62 45·4	·2597	·5674	62 28	·2584	·4961	·5594	J. B. Baylor.
Tybee Light-house.	32 02	80 51	1870·40	63 27·0	·2613	·5845	62 45	·2582	·5012	·5639	C. O. Boutelle.
Savannah, Hutchinson's Isd.	32 05	81 05	1895·41	63 16·7	·2552	·5676	62 59	·2547	·4995	·5607	J. B. Baylor.
Macon Academy.	32 50	83 38	1855·03	63 50·9	·2610	·5922	. .	. .	. .	. .	G. W. Dean.
Milledgeville.	33 04	83 10	1887·19	64 34·4	·2495	·5812	64 15	·2482	·5146	·5715	J. B. Baylor.
Augusta.	33 28	81 58	1833·1	. .	·2618	. .	. .	. .	. .	. .	J. N. Nicollet.
Atlanta.	33 44	84 22	1896·28	64 35·0	·2484	·5788	64 31	·2480	·5204	·5765	G. R. Putnam.
Atlanta Middle Base.	33 54	84 17	1873·11	64 58·5	·2525	·5968	64 29	·2498	·5234	·5799	F. P. Webber.
Athens.	33 57	83 25	1833·4	65 40	?·2106	. .	. .	. .	. .	. .	J. N. Nicollet.
Kenesaw.	33 59	84 35	1873·58	66 00·2	·2495	·6134	65 27	·2468	·5403	·5939	F. P. Webber.
Carnes.	34 00	85 01	1873·97	65 09·6	·2515	·5986	64 36	·2489	·5243	·5803	"
Sweat.	34 04	84 27	1873·77	65 29·2	·2509	·6047	64 56	·2483	·5309	·5861	"
Cumming.	34 12	84 08	1873·87	65 23·5	·2512	·6032	64 47	·2486	·5281	·5835	H. W. Blair.
Sawnee.	34 14	84 10	1873·87	65 26·0	·2489	·5987	64 50	·2463	·5241	·5792	C. O. Boutelle.
Rome.	34 15	85 08	1896·27	65 10·7	·2448	·5831	65 05	·2444	·5261	·5801	J. B. Baylor.
Pine Log.	34 19	84 38	1874·61	65 33·0	·2494	·6025	64 57	·2469	·5282	·5830	F. P. Webber.
Lavender.	34 19	85 17	1874·95	65 30·7	·2498	·6025	64 56	·2473	·5286	·5837	"
Grassy.	34 29	84 20	1874·57	65 41·8	·2394	·5817	65 06	·2369	·5104	·5627	C. O. Boutelle.
Currahee.	34 32	83 23	1874·85	65 45·1	·2435	·5929	65 07	·2410	·5195	·5728	"
Johns.	34 37	85 06	1875·47	65 42·5	0·2484	0·6039	65 08	0·2460	0·5308	0·5849	F. P. Webber.

IDAHO.

Lewiston.	46 28	117 05	1881·71	70 52·0	0·1971	0·6014	70 41	0·1960	0·5593	0·5926	J. S. Lawson.
Lake Pend d'Oreille Landing.	47 58	116 30	1881·69	72 26·0	·1847	·6119	72 15	·1836	·5736	·6023	"
Seneagouteen.	48 10	116 45	1881·68	72 30·7	·1830	·6090	72 20	0·1819	0·5711	0·5994	"
Pack River.	48 22	116 28	1861·46	72 45·5	·1830	·6174	72 22	. .	. .	. .	R. W. Haig.
Chelemta Depot.	48 41	116 19	1861·47	73 08·0	0·1804	0·6210	72 45	. .	. .	. .	"

ILLINOIS.

Cairo.	37 01	89 10	1877·91	67 45·6	0·2332	0·6162	67 19	0·2302	0·5508	0·5969	A. Braid.
Golconda.	37 23	88 25	1872·44	67 55·9	·2252	·5994	67 20	·2210	·5291	·5735	T. C. Hilgard.
Sandoval.	38 37	89 10	1896·33	69 29·2	·2122	·6054	69 25	·2119	·5641	·6027	R. L. Faris.
East St. Louis.	38 38	90 11	1841·76	69 26·7	. .	. .	. .	. .	. .	. .	J. N. Nicollet.
Collinsville.	38 39	90 04	1879·70	69 38·2	·2136	·6138	69 12	·2106	·5544	·5929	F. E. Nipher.
Highland.	38 45	89 41	1872·67	69 47·2	·2133	·6173	69 12	·2092	·5507	·5889	T. C. Hilgard.
Edwardsville.	38 50	89 53	1841·7	69 57·7	. .	. .	. .	. .	. .	. .	E. Loomis.
Alton.	38 54	90 04	1841·7	69 34·8	. .	. .	. .	. .	. .	. .	"
Upper Alton.	38 55	90 03	1841·7	69 45·7	. .	. .	. .	. .	. .	. .	"
Monticello.	38 57	90 05	1841·7	69 38·9	. .	. .	. .	. .	. .	. .	"
Bunker Hill.	39 04	89 53	1841·7	69 49·1	. .	. .	. .	. .	. .	. .	"
Macon.	39 42	89 10	1872·66	70 13·5	·2063	·6098	69 35	·2032	·5459	·5825	T. C. Hilgard.
Springfield.	39 50	89 39	1891·75	70 17·5	·2064	·6120	70 06	·2058	·5685	·6046	J. B. Baylor.
Beardstown.	40 00	90 29	1880·60	70 18·6	·2064	·6126	69 51	·2040	·5559	·5921	F. E. Nipher.
Copperas Creek.	40 30	89 48	1841·7	70 56·4	. .	. .	. .	. .	. .	. .	E. Loomis.
Bloomington.	40 31	88 59	1891·74	70 52·2	0·2000	0·6104	70 40	0·1993	0·5682	0·6022	J. B. Baylor.
Pekin.	40 35	89 36	1841·7	71 13·2	. .	. .	. .	. .	. .	. .	E. Loomis.

Collection of the most recent magnetic dips and intensities observed in the United States and referred to the epoch 1900·0—Continued.

ILLINOIS—Continued.

Name of station.	Lat.	Long.	Date.	Dip θ.	Hor. force H.	Total force F.	θ_{1900}	H_{1900}	V_{1900}	F_{1900}	Observer.
	° ′	° ′		° ′			° ′				
Wenona.	41 05	89 26	1872·66	71 43·9	0·1955	0·6237	71 03	0·1928	0·5615	0·5937	T. C. Hilgard.
Ottawa.	41 20	88 50	1891·72	72 11·0	·1912	·6249	71 59	·1909	·5869	·6172	J. B. Baylor.
Peru, near landing.	41 23	89 05	1841·7	71 51·1	. .	. .	. .	. .	. .	. .	E. Loomis.
Joliet.	41 30	88 09	1841·7	72 16·0	. .	. .	. .	. .	. .	. .	J. N. Nicollet.
Rock Island.	41 31	90 34	1878·73	72 15·3	·1940	·6366	71 43	·1923	·5821	·6131	C. F. Powell.
Mount Forest.	41 45	87 52	1876·67	71 52·8	·1831	·5888	71 15	. .	. .	. .	D.W.Lockwood.
Chicago, site of old university.	41 50	87 37	1888·63	72 28·5	·1863	·6187	72 20	·1866	·5859	·6149	J. B. Baylor.
Chicago, near water tower.	41 54	87 37	1891·55	72 22·6	·1874	·6189					G. R. Putnam.
Rockford.	42 17	89 06	1891·72	72 38·2	·1859	·6228	72 25	·1852	·5845	·6132	J. B. Baylor.
Galena.	42 25	90 26	1876·74	73 09·0	0·1841	0·6351	72 34	0·1823	0·5805	0·6085	C. F. Powell.
Dunleith.	42 28	90 40	1856·80	73 10	. .	. .	. .	. .	. .	. .	K. Friesach.

INDIANA.

Mount Vernon.	37 59	87 47	1840·69	68 56·3	0·2232	0·6211	. .	. .	. .	. .	J. Locke.
New Harmony.	38 08	87 50	1880·84	69 02·6	·2196	·6139	68 34	0·2175	0·5542	0·5953	J. B. Baylor.
Near Albany.	38 20	85 47	1871·91	70 21·9	·2059	·6128	69 40	·2030	·5478	·5842	T. C. Hilgard.
Princeton.	38 23	87 30	1840·71	69 22·8	·2191	·6220	. .	. .	. .	. .	J. Locke
Paoli.	38 35	86 25	1840·72	69 33·8	·2163	·6197	. .	. .	. .	. .	"
Vincennes.	38 41	87 32	1896·33	69 32·4	·2124	·6077	69 27	·2122	·5659	·6045	R. L. Faris.
Terre Haute.	39 28	87 20	1888·62	70 23·6	·2060	·6139	70 06	·2051	·5666	·6026	J. B. Baylor.
Indianapolis.	39 47	86 08	1880·87	70 51·4	·2015	·6144	70 21	·2000	·5601	·5947	"
Richmond.	39 50	84 50	1880·88	71 13·4	·2008	·6237	70 40	·1997	·5694	·6034	"
Reynolds.	40 45	86 48	1874·65	72 00	·1942	·6284	71 17	·1922	·5671	·5988	F. E. Hilgard & W. Diehl.
Fort Wayne.	41 03	85 03	1891·53	72 00·2	·1936	·6266	71 45	·1934	·5865	·6176	J. B. Baylor.
Michigan City.	41 43	86 54	1891·54	72 25·4	0·1875	0·6210	72 15	0·1873	0·5851	0·6144	"

INDIAN TERRITORY.

Atoka.	34 24	96 05	1878·54	63 44·8	0·2614	0·5911	63 33	0·2558	0·5141	0·5742	J. B. Baylor.
Vinita.	36 38	95 08	1888·77	66 20·0	0·2390	0·5956	66 12	0·2363	0·5358	0·5856	"

IOWA.

Keokuk.	40 25	91 25	1888·70	70 31·2	0·2039	0·6112	70 16	0·2027	0·5652	0·6003	J. B. Baylor.
Ottumwa.	41 02	92 25	1888·70	71 14·7	·1988	·6182	71 00	·1979	·5748	·6080	"
Council Bluffs.	41 15	95 52	1878·66	71 05·7	·2013	·6214	70 40	·1988	·5667	·6006	T. E. Thorpe.
Engineer Cantonment.	41 25	95 44	1820·5	71 07	. .	. .	. .	. .	. .	. .	S. H. Long.
Davenport.	41 30	90 38	1888·68	71 50·8	·1947	·6249	71 34	·1938	·5816	·6130	J. B. Baylor.
Des Moines.	41 36	93 36	1888·72	71 25·9	·1966	·6176	71 11	·1957	·5744	·6067	"
Lost Grove.	41 39	90 09	1839·73	72 02·4	·1964	·6368	. .	. .	. .	. .	J. Locke.
Iowa City, University.	41 40	91 32	1878·51	72 19·7	·1899	·6256	71 50	·1880	·5729	·6030	F. E. Nipher.
Nipher's Farm, near Iowa City.	41 40	91 36	1879·52	72 02·7	·1903	·6173	71 34	·1884	·5653	·5958	"
Wapsipinicon.	41 44	90 23	1839·73	72 15·0	·1952	·6404	. .	. .	. .	. .	J. Locke.
Iron Ore Bed.	41 55	90 40	1839·74	72 50·5	·1907	·6464	. .	. .	. .	. .	"
Browns Settlement.	42 02	91 06	1839·75	72 21	·1927	·6354	. .	. .	. .	. .	"
Small Mill.	42 04	91 02	1839·8	72 24·4	. .	. .	. .	. .	. .	. .	"
Farmers Creek.	42 13	90 23	1839·75	72 36	·1919	·6418	. .	. .	. .	. .	"
Maquoketa River.	42 14	90 55	1839·75	72 43·6	·1896	·6386	. .	. .	. .	. .	"
White Water River.	42 18	90 38	1839·77	72 55	·1873	·6377	. .	. .	. .	. .	"
Maquoketa, N. Branch.	42 23	90 52	1839·77	72 51	·1867	·6335	. .	. .	. .	. .	"
Sioux City.	42 27	96 27	1891·67	71 41·4	·1943	·6185	71 31	·1936	·5792	·6106	J. B. Baylor.
Waterloo.	42 28	92 26	1891·70	72 44·4	·1845	·6219	72 33	·1840	·5853	·6137	"
Dubuque.	42 30	90 44	1891·71	72 57·5	·1822	·6218	72 45	·1819	·5857	·6134	"
Fort Dodge.	42 30	94 14	1891·69	72 20·1	·1877	·6185	72 09	·1872	·5813	·6106	"
Forks of Little Maquoketa.	42 31	90 31	1839·80	73 08	·1849	·6372	. .	. .	. .	. .	J. Locke.
Turkey River.	42 42	90 48	1839·81	73 11	·1832	·6335	. .	. .	. .	. .	"
Sibley.	43 24	95 50	1891·68	72 51·3	0·1834	0·6223	72 40	0·1829	0·5860	0·6139	J. B. Baylor.

Collection of the most recent magnetic dips and intensities observed in the United States and referred to the epoch 1900·0—Continued.

KANSAS.

Name of station.	Lat.	Long.	Date.	Dip θ.	Hor. force H.	Total force F.	θ_{1900}	H_{1900}	V_{1900}	F_{1900}	Observer.
	° ′	° ′		° ′			° ′				
Parsons.	37 20	95 17	1879·65	67 12·4	0·2342	. .	66 56	0·2296	0·5392	0·5860	F. E. Nipher.
Wichita, University.	37 40	97 20	1888·79	67 10·6	·2283	0·5885	67 02	·2257	·5327	·5785	J. B. Baylor.
Dodge City.	37 44	99 59	1888·81	66 20·4	·2365	·5894	66 13	·2339	·5309	·5801	"
Sargent.	38 05	101 58	1878·61	66 50·5	·2365	·6012	66 38	·2315	·5358	·5835	"
Great Bend.	38 24	98 43	1878·58	67 38·0	·2300	·6045	67 23	·2250	·5388	·5838	"
Emporia.	38 26	96 12	1888·77	67 34·5	·2274	·5961	67 24	·2254	·5416	·5865	"
Wallace.	38 55	101 35	1872·78	67 31·6	·2285	·5978	67 12	·2223	·5289	·5737	T. C. Hilgard.
Ellis.	38 56	99 40	1872·77	67 51·7	·2275	·6037	67 30	·2213	·5343	·5784	"
Lawrence, Old Univ.	38 58	95 15	1877·87	68 43·4	·2244	·6183	68 21	·2204	·5552	·5973	Andrew Braid.
Junction City.	39 02	96 53	1888·76	68 34·7	·2216	·6069	68 25	·2196	·5551	·5969	J. B. Baylor.
Manhattan College.	39 12	96 35	1872·77	68 47·2	0·2201	0·6083	68 20	0·2153	0·5419	0·5830	T. C. Hilgard.
Fort Leavenworth.	39 21	94 54	1858·5	69 29	. .	. .	. .	. .	. .	. .	J. H. Simpson.
Little Muddy Creek.	39 35	95 34	1858·5	69 35	. .	. .	. .	. .	. .	. .	"
Vermilion Creek.	39 57	96 16	1858·5	70 09	. .	. .	. .	. .	. .	. .	"
Big Blue River.	40 00	96 35	1858·5	69 19	. .	. .	. .	. .	. .	. .	"

KENTUCKY.

Hickman.	36 34	89 12	1881·72	67 19·4	0·2338	0·6065	66 57	0·2317	0·5445	0·5917	J. B. Baylor.
Mayfield.	36 45	88 41	1881·74	67 35·0	·2309	·6055	67 13	·2288	·5446	·5907	"
Williamsburg.	36 45	84 10	1896·30	67 58·7	·2224	·5932	67 53	·2221	·5466	·5899	R. L. Faris.
Oakland.	37 02	86 15	1871·85	68 48·8	·2244	·6209	68 06	·2213	·5505	·5933	A. T. Mosman & E. Smith.
Smithland.	37 08	88 30	1833·9	68 11	. .	. .	. .	. .	. .	. .	J. N. Nicollet.
Mammoth Cave, mouth.	37 10	86 11	1849·45	69 18·5	·2185	·6185	. .	. .	. .	. .	J. H. Lefroy.
Madisonville.	37 19	87 33	1881·75	68 24·2	·2266	·6157	67 59	·2245	·5551	·5988	J. B. Baylor.
Livingston.	37 23	84 20	1881·80	68 50·3	·2221	·6153	68 20	·2205	·5550	·5971	"
Leitchfield.	37 30	86 22	1881·77	68 38·2	·2256	·6192	68 11	·2236	·5586	·6017	"
Stanford.	37 31	84 44	1881·79	69 43·8	·2132	·6155	69 14	·2115	·5577	·5965	"
Lebanon.	37 36	85 19	1881·78	69 06·8	·2190	·6143	68 38	·2172	·5552	·5962	"
Clays Ferry.	37 54	84 18	1840·67	69 49·0	·2139	·6202	. .	. .	. .	. .	J. Locke.
Lexington.	38 04	84 30	1896·31	69 32·6	·2079	·5950	69 26	·2077	·5537	·5913	R. L. Faris.
Shelbyville.	38 13	85 13	1871·90	69 46·6	·2144	·6203	69 02	·2114	·5517	·5907	A. T. Mosman & E. Smith.
Frankfort.	38 14	84 40	1840·67	69 54·9	·2128	·6202	. .	. .	. .	. .	J. Locke.
Shippingport.	38 15	85 48	1819·38	70 15	. .	. .	. .	. .	. .	. .	S. H. Long.
Louisville.	38 15	85 46	1896·31	69 19·9	·2130	·6036	69 14	·2127	·5608	·5998	R. L. Faris.
Grayson.	38 18	82 59	1881·84	70 09·3	·2141	·6306	69 36	·2129	·5724	·6106	J. B. Baylor.
Cynthiana.	38 26	84 25	1881·81	69 44·0	·2133	·6158	69 13	·2121	·5589	·5977	"
Flemingsburg.	38 26	83 46	1881·83	69 45·2	·2133	·6165	69 13	·2121	·5589	·5977	"
Williamstown.	38 36	84 22	1840·66	70 04·1	·2122	·6225	. .	. .	. .	. .	J. Locke.
Falmouth.	38 41	84 17	1872·00	70 16·1	0·2112	0·6255	69 28	0·2088	0·5576	0·5954	E. Goodfellow.

LOUISIANA.

South West Pass, Mississippi River.	28 59	89 23	1872·17	58 46·5	0·2863	0·5522	58 41	0·2783	0·4574	0·5355	T. C. Hilgard.
South East Pass, Mississippi River.	29 05	89 04	1859·97	58 45·3	·2940	·5668	. .	. .	. .	. .	J. G. Oltmanns.
Cubitt.	29 10	89 15	1859·96	58 54·0	·2924	·5662	. .	. .	. .	. .	"
Pass à Loutre.	29 11	89 01	1859·99	58 47·0	·2930	·5654	. .	. .	. .	. .	"
Osgood Island.	29 11	89 05	1872·17	59 01·2	·2798	·5437	58 56	·2720	·4515	·5271	T. C. Hilgard.
Magnolia Base, lower station.	29 32	89 47	1872·04	59 23·5	·2756	·5413	59 18	·2689	·4529	·5267	"
Marsh Island.	29 35	92 02	1886·04	58 51·7	·2860	·5530	58 51	·2822	·4669	·5455	J. B. Baylor.
Morgan City.	29 40	91 15	1886·38	59 13·3	.2840	·5549	59 12	·2802	·4701	·5473	"
Côte Blanche.	29 44	91 43	1860·17	59 08·8	·2927	·5709	. .	. .	. .	. .	J. G. Oltmanns.
Barrel Key.	29 54	89 08	1857·28	59 48·2	·2897	·5759	. .	. .	. .	. .	S. Harris.
Avery's Island.	29 55	91 45	1872·20	59 26·4	·2772	·5452	59 24	·2695	·4557	·5294	T. C. Hilgard.
New Orleans, City Park.	29 56	90 08	1872·12	59 43·5	·2748	·5459	59 38				"
New Orleans, Fair Grounds.	29 59	90 05	1895·56	59 43·2	·2794	·5541	59 42	·2776	·4744	·5497	G. R. Putnam.
Donaldsonville.	30 07	90 57	1896·07	59 53·2	0·2797	0·5575	59 52	0·2787	0·4800	0·5551	J. B. Baylor.

Collection of the most recent magnetic dips and intensities observed in the United States and referred to the epoch 1900·0—Continued.

LOUISIANA—Continued.

Name of station.	Lat.	Long.	Date.	Dip θ.	Hor. force H.	Total force F.	θ_{1900}	H_{1900}	V_{1900}	F_{1900}	Observer.
	° ′	° ′		° ′			° ′				
Mermenteau.	30 12	92 27	1890·31	59 34·5	0·2801	0·5531	59 34	0·2774	0·4722	0·5476	J. B. Baylor.
Lake Charles.	30 12	93 09	1890·30	59 31·3	·2807	·5538	59 31	·2780	·4722	·5480	"
Lafayette.	30 14	92 00	1890·31	59 42·9	·2793	·5538	59 42	2766	·4733	·5481	"
Baton Rouge.	30 27	91 11	1896·10	60 23·4	·2756	·5578	60 22	·2745	·4826	·5552	"
Amite.	30 43	90 27	1896·11	60 37·6	·2754	·5614	60 36	·2744	·4870	·5590	"
Cheneyville.	31 01	92 15	1896·08	60 40·0	·2746	·5605	60 39	·2736	·4865	·5582	"
Alexandria.	31 17	92 27	1872·29	60 53·0	·2750	·5652	60 45	·2673	·4773	·5470	T. C. Hilgard.
Gaines Ferry.	31 28	93 45	1840·4	60 57·0	. .	. .	. .	. .	. .	. .	J. D. Graham.
Natchitoches.	31 44	93 07	1840·5	61 15·9	. .	. .	. .	. .	. .	. .	"
Grand Ecore.	31 48	93 07	1872·27	61 27·2	·2721	·5694	61 19	·2645	·4834	·5511	T. C. Hilgard.
Sabine River.	32 01	94 00	1840	61 36·8	. .	. .	. .	. .	. .	. .	J. D. Graham.
Monroe.	32 29	92 08	1872·32	. .	·2664	. .	. .	·2590	. .	. .	T. C. Hilgard.
Shreveport.	32 30	93 45	1888·98	61 49·1	0·2668	0·5650	61 45	0·2639	0·4911	0·5575	J. B. Baylor.

MAINE.

Appledore Island, Isles of Shoals.	42 59	70 37	1847·64	74 44·1	0·1605	0·6097	. .	. .	. .	. .	T. J. Lee.
Kittery Point.	43 05	70 43	1890·66	74 04·5	·1657	·6040	73 55	0·1688	0·5855	0·6094	J. B. Baylor.
Cape Neddick.	43 12	70 36	1851·66	74 57·9	·1621	·6249	. .	. .	. .	. .	J. E. Hilgard.
Agamenticus.	43 13	70 42	1847·83	74 54·7	·1593	·6122	. .	. .	. .	. .	T. J. Lee & R. H. Fauntleroy.
Kennebunkport.	43 21	70 28	1851·64	75 14·1	·1590	·6238	. .	. .	. .	. .	J. E. Hilgard.
Fletcher's Neck.	43 27	70 20	1850·69	75 18·3	·1586	·6253	. .	. .	. .	. .	"
Richmond Island.	43 33	70 14	1850·71	75 08·0	·1597	·6224	. .	. .	. .	. .	"
Portland, Bramhall Hill.	43 39	70 17	1895·57	74 04·6	·1664	·6065	73 54	·1675	·5803	·6040	J. B. Baylor.
Portland, Munjoy's Hill	43 40	70 15	1873·69	74 57·9	·1601	·6171					T. C. Hilgard.
Harpswell.	43 44	70 01	1863·55	75 52·4	·1466	·6006	. .	. .	. .	. .	C. A. Schott.
Mount Independence.	43 46	70 19	1849·78	75 23·8	·1578	·6259	. .	. .	. .	. .	G. Davidson.
Cape Small.	43 47	69 51	1851·79	75 01·8	·1563	·6049	. .	. .	. .	. .	G. W. Dean.
Freeport.	43 51	70 06	1863·53	75 20·3	·1563	·6175	. .	. .	. .	. .	C. A. Schott.
Brunswick.	43 54	69 58	1873·71	75 08·3	·1585	·6178	74 03	·1666	·5829	·6063	T. C. Hilgard.
Bath.	43 55	69 49	1863·53	75 25·5	·1545	·6138	. .	. .	. .	. .	C. A. Schott.
Mount Pleasant.	44 02	70 49	1851·59	76 01·5	·1481	·6133	. .	. .	. .	. .	G. W. Dean.
Damariscotta.	44 02	69 32	1887·60	74 34·5	·1600	·6015	73 57	·1640	·5701	·5930	J. B. Baylor.
Rockland.	44 06	69 06	1863·51	75 30·9	·1528	·6107	. .	. .	. .	. .	C. A. Schott.
Mt. Sebattis (Sebattus).	44 09	70 05	1853·57	75 40·6	·1573	·6357	. .	. .	. .	. .	J. E. Hilgard.
Camden village.	44 12	69 05	1854·82	75 41·5	·1542	·6241	. .	. .	. .	. .	G. W. Dean & R. J. Breckinridge.
Mount Ragged.	44 13	69 09	1854·73	75 41·2	·1542	·6238	. .	. .	. .	. .	G. W. Dean & S. Harris.
Southwest Harbor, Mt. Desert Island.	44 15	68 18	1856·73	76 15·5	·1512	·6367	. .	. .	. .	. .	S. Harris.
Mount Desert.	44 21	68 14	1856·77	76 09·2	·1501	·6271	. .	. .	. .	. .	G. W. Dean.
Locke's Mill.	44 24	70 44	1845·45	75 50·7	·1523	·6234	. .	. .	. .	. .	J. Locke.
Belfast.	44 26	69 01	1863·52	75 38·1	·1533	·6180	. .	. .	. .	. .	C. A. Schott.
Bethel.	44 28	70 51	1845·44	75 51·0	·1525	·6243	. .	. .	. .	. .	J. Locke.
Mill Bridge.	44 32	67 54	1887·62	74 30·6	·1627	·6095	73 54	·1667	·5776	·6010	J. B. Baylor.
Waterville.	44 33	69 45	1849·5	75 59·4	·1495	·6177	. .	. .	. .	. .	G. W. Keely.
Howard.	44 38	67 24	1859·59	75 21·6	·1594	·6308	. .	. .	. .	. .	G. W. Dean.
Mount Saunders.	44 39	68 36	1856·52	75 58·6	·1512	·6239	. .	. .	. .	. .	G. W. Dean & J. H. Toomer.
Mount Harris.	44 40	69 09	1855·68	76 14·1	·1494	·6279	. .	. .	. .	. .	G. W. Dean & T. M. McIver.
Farmington.	44 40	70 09	1887·77	75 11·1	·1549	·6057	74 34	·1587	·5750	·5965	J. B. Baylor.
Machiasport.	44 41	67 24	1887·64	74 27·2	·1616	·6030	73 50	·1656	·5714	·5948	"
Pittsfield.	44 46	69 29	1887·75	75 15·3	·1541	·6052	74 39	·1579	·5751	·5965	"
Bangor, Thomas Hill.	44 48	68 47	1895·59	74 59·4	·1558	·6016	74 44	·1569	·5748	·5957	"
Humpback.	44 52	68 07	1858·67	76 12·0	·1485	·6225	. .	. .	. .	. .	G. W. Dean and A. T. Mosman.
Eastport, Fort Sullivan.	44 54	66 59	1895·61	74 37·6	·1598	·6028	74 29	·1608	·5792	·6010	J. B. Baylor.
Cooper.	44 59	67 28	1859·70	76 20·3	·1466	·6207	. .	. .	. .	. .	G. W. Dean.
Calais.	45 11	67 17	1895·64	75 11·3	·1547	·6051	74 58	·1561	·5812	·6019	G. R. Putnam.
Forks of Kennebec.	45 20	69 58	1844·6	76 23·7	. .	. .	. .	. .	. .	. .	J. D. Graham.
Greenville.	45 28	69 43	1887·73	75 36·3	·1506	·6056	75 00	·1543	·5757	·5961	J. B. Baylor.
Mattawamkeag.	45 31	68 24	1887·72	75 34·4	0·1498	0·6013	74 58	0·1535	0·5715	0·5919	"

Collection of the most recent magnetic dips and intensities observed in the United States and referred to the epoch 1900·0—Continued.

MAINE—Continued.

Name of station.	Lat.	Long.	Date.	Dip θ.	Hor. force H.	Total force F.	θ_{1900}	H_{1900}	V_{1900}	F_{1900}	Observer.
	° ′	° ′		° ′			° ′				
Vanceboro.	45 34	67 27	1887·70	75 36·4	0·1485	0·5974	75 00	0·1521	0·5675	0·5876	J. B. Baylor.
Moose River.	45 39	70 16	1844·6	76 48·5	. .	. .	. .	. .	. .	. .	J. D. Graham.
Danforth.	45 40	67 58	1887·71	75 41·2	·1486	·6008	75 04	·1522	·5707	·5906	J. B. Baylor.
Tachereau's.	45 49	70 24	1844·5	76 50·4	. .	. .	. .	. .	. .	. .	J. D. Graham.
Source of St. Croix, northeast boundary.	45 57	67 47	1840·8	76 57·4	. .	. .	. .	. .	. .	. .	"
Park's Hill.	46 07	67 47	1841·6	77 00·7	. .	. .	. .	. .	. .	. .	"
Houlton.	46 07	67 53	1887·68	76 01·8	·1456	·6031	75 25	·1492	·5735	·5927	J. B. Baylor.
Branch of the St. John.	46 25	70 04	1844·5	77 24·8	. .	. .	. .	. .	. .	. .	J. D. Graham.
River St. John, near the Grand Forks.	46 35	69 53	1843·5	77 25·9	. .	. .	. .	. .	. .	. .	"
Blue Hill.	46 38	67 47	1841·5	77 18·1	. .	. .	. .	. .	. .	. .	"
Presque Isle.	46 39	68 00	1887·66	76 30·9	0·1426	0·6116	75 55	0·1461	0·5824	0·6005	J. B. Baylor.
Aroostook.	46 47	67 47	1841·5	77 24·1	. .	. .	. .	. .	. .	. .	J. D. Graham.
Big Black River.	46 57	69 27	1843·5	77 37·5	. .	. .	. .	. .	. .	. .	"
Peconk Hill.	46 59	67 47	1841·5	77 32·2	. .	. .	. .	. .	. .	. .	"
Falls of the St. John.	47 03	67 45	1843·5	77 29·5	. .	. .	. .	. .	. .	. .	"
River St. John, N. bank.	47 04	67 47	1843·5	77 31·0	. .	. .	. .	. .	. .	. .	"
Little Black River.	47 07	69 05	1844·5	77 40·5	. .	. .	. .	. .	. .	. .	"
St. Francis River.	47 11	68 54	1843·5	77 43·5	. .	. .	. .	. .	. .	. .	"
Grand River, mouth.	47 11	67 57	1847·5	77 36	. .	. .	. .	. .	. .	. .	G. W. Keely.
Fort Kent, Fish River.	47 15	68 35	1843·5	77 43·1	. .	. .	. .	. .	. .	. .	J. D. Graham.
Albert's Inn, River St. John.	47 17	68 27	1843·5	77 44·5	. .	. .	. .	. .	. .	. .	"
Beau Lac, head.	47 22	69 03	1843·5	77 47	. .	. .	. .	. .	. .	. .	"
Madawaska River, mouth.	47 22	68 19	1847·5	77 45	. .	. .	. .	. .	. .	. .	G. W. Keely.
Lake Pohenagamook.	47 28	69 13	1843·5	77 49·2	. .	. .	. .	. .	. .	. .	J. D. Graham.

MARYLAND.

Mason's Landing.	38 14	75 15	1856·66	70 44·8	0·2032	0·6160	. .	. .	. .	. .	C. A. Schott.
Davis.	38 20	75 06	1853·72	70 57·7	·1997	·6123	. .	. .	. .	. .	J. E. Hilgard.
Calvert.	38 22	76 24	1871·58	70 33·9	·2064	·6202	69 37	0·2074	0·5582	0·5954	A. T. Mosman.
Oxford.	38 41	76 10	1856·64	70 58·0	·2021	·6197	. .	. .	. .	. .	C. A. Schott.
Marriott.	38 52	76 37	1849·44	71 12·9	·1997	·6203	. .	. .	. .	. .	A. D. Bache and J. Hewston.
Hill.	38 54	76 53	1868·82	71 17·1	·2015	·6278	70 15	·2025	·5641	·5994	C. O. Boutelle.
Kent Isd., South Base.	38 54	76 22	1845·42	71 37·0	·1939	·6149	. .	. .	. .	. .	T. J. Lee.
Taylor.	39 00	76 28	1847·42	71 19·3	·1946	·6077	. .	. .	. .	. .	"
Kent Isd., Station 1.	39 02	76 19	1849·50	71 16·6	·1986	·6187	. .	. .	. .	. .	J. Hewston.
Soper.	39 05	76 57	1850·56	71 56·5	·1911	·6164	. .	. .	. .	. .	G. W. Dean.
Webb.	39 05	76 40	1868·73	71 18·5	·1996	·6228	70 16	·2006	·5593	·5940	C. O. Boutelle.
Stabler.	39 07	76 59	1869·65	71 28·1	·1973	·6207	70 27	·1983	·5585	·5927	"
Bodkin Light-house.	39 08	76 25	1847·31	71 43(?)	·1932	·6157	. .	. .	. .	. .	T. J. Lee.
North Point.	39 12	76 27	1846·52	71 29·5	·1929	·6075	. .	. .	. .	. .	"
Baltimore, Fort McHenry Station.	39 16	76 35	1895·74	71 00·3	·1956	·6010	70 35	·1957	·5553	·5889	J. B. Baylor.
Baltimore, St. Mary's College and near Washington Mon't.	39 18	76 37	1842·77	71 43·3	·1952	·6224					J. H. Lefroy.
Pool's Island.	39 17	76 16	1847·49	71 52·1	·1898	·6100	. .	. .	. .	. .	T. J. Lee.
Rosanne.	39 18	76 43	1845·44	72 06·6	·1869	·6083	. .	. .	. .	. .	"
Maryland Heights.	39 20	77 43	1870·82	71 28·0	·1990	·6261	70 30	·2000	·5648	·5991	C. O. Boutelle.
Finlay.	39 24	76 32	1846·27	71 47·9	·1896	·6072	. .	. .	. .	. .	T. J. Lee and J. Locke.
Osborne's Ruin.	39 28	76 17	1845·50	71 47·6	·1910	·6113	. .	. .	. .	. .	T. J. Lee.
Susquehanna Light.	39 32	76 05	1847·51	71 52·1	·1884	·6054	. .	. .	. .	. .	"
Frenchtown.	39 35	75 51	1840·6	71 40·2	·1988	·6321	. .	. .	. .	. .	A. D. Bache.
Cumberland.	39 39	78 44	1844·23	71 36·0	·1967	·6229	. .	. .	. .	. .	J. Locke.
Frostburg.	39 41	78 56	1840·6	71 31·3	·1982	·6253	. .	. .	. .	. .	A. D. Bache.
Emmitsburg.	39 41	77 18	1842·28	71 46·3	·1957	·6257	. .	. .	. .	. .	J. Locke.

Collection of the most recent magnetic dips and intensities observed in the United States and referred to the epoch 1900·0—Continued.

MASSACHUSETTS.

Name of station.	Lat.	Long.	Date.	Dip θ.	Hor. force H.	Total force F.	θ_{1900}	H_{1900}	V_{1900}	F_{1900}	Observer.
	° ′	° ′		° ′			° ′				
Nantucket Cliff, near town.	41 17	70 06	1895·52	72 40·3	0·1780	0·5976	72 22	0·1792	0·5637	0·5914	J. B. Baylor.
Sampson Hill.	41 23	70 29	1846·56	73 24·5	·1730	·6060	. .	. .	. .	. .	T. J. Lee.
Indian.	41 26	70 41	1846·62	73 29·1	·1719	·6047	. .	. .	. .	. .	"
Vineyard Haven.	41 28	70 36	1875·73	73 09·9	·1795	·6198	72 09	·1865	·5792	·6084	J. M. Poole.
Tarpaulin Cove.	41 28	70 45	1846·60	73 49·8	·1704	·6119	. .	. .	. .	. .	T. J. Lee.
Fairhaven.	41 37	70 54	1845·79	74 40·0	·1656	·6264	. .	. .	. .	. .	"
Hyannis.	41 38	70 18	1846·64	73 49·2	·1698	·6091	. .	. .	. .	. .	T. J. Lee and R. H. Fauntleroy.
Chatham.	41 40	69 57	1860·69	73 46·2	·1726	·6175	72 07	. .	. .	. .	C. A. Schott.
Shootflying.	41 41	70 21	1846·66	73 56·5	·1689	·6106	. .	. .	. .	. .	T. J. Lee and R. H. Fauntleroy.
Copecut.	41 43	71 04	1844·76	74 09·5	. .	. .	. .	. .	. .	. .	T. J. Lee.
Manomet.	41 56	70 36	1867·60	73 58·5	·1731	·6269	72 38	. .	. .	. .	C. O. Boutelle.
Wellfleet.	41 56	70 02	1860·70	74 20·2	·1677	·6213	72 42	. .	. .	. .	C. A. Schott.
Plymouth.	41 58	70 39	1876·53	73 48·3	·1727	·6192	72 38	·1788	·5718	·5991	F. E. Hilgard.
Longmeadow.	42 02	72 36	1839·7	74 05·3	. .	. .	. .	. .	. .	. .	E. Loomis.
Provincetown.	42 03	70 11	1895·53	73 03·4	·1747	·5995	72 50	·1763	·5707	·5973	J. B. Baylor.
Springfield.	42 06	72 35	1859·57	74 14·9	·1702	·6271	72 34	. .	. .	. .	C. A. Schott.
Blue Hill.	42 13	71 07	1845·77	75 05·6	·1622	·6308	. .	. .	. .	. .	T. J. Lee.
Easthampton.	42 15	72 40	1862·52	74 06·1	·1702	·6212	72 30	. .	. .	. .	E. Goodfellow.
Worcester.	42 16	71 48	1839·7	74 20·6	. .	. .	. .	. .	. .	. .	E. Loomis.
Nantasket.	42 18	70 54	1847·67	74 15·9	·1644	·6063	. .	. .	. .	. .	T. J. Lee.
Castle Island, Boston Harbor.	42 20	71 01	1896·45	73 05·8	·1744	·5998	72 52	·1786	·5692	·5966	G. R. Putnam.
Boston Common.	42 21	71 04	1890·69	73 21·3	·1726	·6026	72 35				J. B. Baylor.
Cambridge, Harvard Observatory.	42 23	71 08	1895·54	73 15·6	·1731	·6010	72 48	·1761	·5686	·5952	"
Chesterfield.	42 24	72 51	1859·56	74 21·2	·1691	·6271	72 40	. .	. .	. .	C. A. Schott.
Little Nahant.	42 26	70 56	1849·62	74 29·5	·1640	·6132	. .	. .	. .	. .	G. W. Keely.
Wachusett.	42 29	71 53	1860·7	74 28·8	·1675	·6261	72 51	. .	. .	. .	G. W. Dean and R. E. Halter.
Fort Lee, Salem.	42 32	70 52	1887·80	74 24·8	·1631	·6070	73 48	·1661	·5718	·5954	J. B. Baylor.
Baker Island Light.	42 32	70 47	1849·66	74 18·6	·1698	·6278	. .	. .	. .	. .	G. W. Keely.
Deerfield.	42 33	72 36	1859·56	74 35·3	·1668	·6275	72 54	. .	. .	. .	C. A. Schott.
Fitchburg.	42 35	71 48	1876·55	74 09·8	·1703	·6240	73 00	·1760	·5757	·6020	F. E. Hilgard.
Greenfield.	42 35	72 35	1876·56	74 06·1	·1707	·6231	72 56	·1764	·5746	·6010	"
Gloucester, Beaconhill.	42 36	70 39	1859·52	74 45·6	·1681	·6391	73 05	. .	. .	. .	C. A. Schott.
Thompson.	42 37	70 44	1859·52	74 30·4	·1694	·6340	72 49	. .	. .	. .	"
Lowell.	42 39	71 20	1876·55	74 19·3	·1676	·6202	73 09	·1736	·5731	·5984	F. E. Hilgard.
Annisquam.	42 39	70 41	1859·53	74 56·1	·1655	·6368	73 15	. .	. .	. .	C. A. Schott.
Rockport.	42 40	70 37	1859·53	75 05·9	·1627	·6326	73 25	. .	. .	. .	"
Ipswich.	42 41	70 50	1859·53	74 37·3	·1659	·6257	72 56	. .	. .	. .	"
North Adams.	42 42	73 08	1876·57	74 15·3	·1710	·6302	73 05	·1770	·5820	·6082	F. E. Hilgard.
Plum Island.	42 48	70 49	1887·80	74 01·1	0·1662	0·6038	73 25	0·1692	0·5682	0·5928	J. B. Baylor.

MICHIGAN.

Monroe.	41 55	83 27	1841·6	73 19·0	. .	. .	. .	. .	. .	. .	E. Loomis.
Ypsilanti.	42 14	83 37	1893·9	71 30	. .	. .	71 18	. .	. .	. .	C. S. Woodard.
Marshall.	42 16	84 58	1876·79	73 30·9	0·1809	0·6375	72 47	0·1805	0·5825	0·6098	C. F. Powell.
Ann Arbor, observatory.	42 17	83 44	1870·66	72 56·6	·1820	·6206	71 58	·1809	·5556	·5842	J. E. Hilgard.
Detroit, Olympic Park.	42 21	83 03	1891·47	73 05·9	·1803	·6201	72 44	·1816	·5842	·6117	G. R. Putnam.
Eaton Rapids.	42 32	84 38	1870·66	73 40·0	·1775	·6312	72 41	·1775	·5693	·5964	J. E. Hilgard.
Fort Gratiot.	43 00	82 25	1873·54	74 22	·1713	·6358	73 26	·1713	·5757	·6008	A. N. Lee.
Grand Haven.	43 05	86 13	1891·55	73 34·7	·1773	·6271	73 29	·1773	·5978	·6236	J. B. Baylor.
Wahley.	43 22	82 32	1860·36	74 41	·1692	·6406	. .	. .	. .	. .	W. P. Smith.
St. Louis.	43 25	84 36	1876·78	73 48·9	·1680	·6026	73 02	·1680	·5507	·5757	D. W. Lockwood.
Saginaw.	43 25	83 58	1876·71	73 36·2	·1693	·5997	72 50	·1693	·5481	·5737	"
Forestville.	43 40	82 34	1873·53	74 54	·1676	·6435	74 01	0·1676	0·5852	0·6087	A. N. Lee.
Sand Point.	43 55	83 23	1858·71	75 02	·1647	·6379	. .	. .	. .	. .	W. P. Smith.
Sturgeon Point.	44 43	83 14	1858·73	75 59	·1539	·6356	. .	. .	. .	. .	"
South Manitou.	45 00	86 06	1860·70	76 01	0·1549	0·6426	. .	. .	. .	. .	"

Collection of the most recent magnetic dips and intensities observed in the United States and referred to the epoch 1900·0—Continued.

MICHIGAN—Continued.

Name of station.	Lat.	Long.	Date.	Dip θ.	Hor. force H.	Total force F.	θ_{1900}	H_{1900}	V_{1900}	F_{1900}	Observer.
	° ′	° ′		° ′			° ′				
Thunder Bay.	45 02	83 09	1858·64	76 24	0·1494	0·6359	. .	. .	. .	. .	W. P. Smith.
Northport.	45 08	85 36	1860·67	76 06	·1540	·6411	. .	. .	. .	. .	"
Beaver Isd., near light.	45 45	85 30	1860·75	76 43	·1492	·6494	. .	. .	. .	. .	"
Mackinac.	45 51	84 38	1880·57	76 27·6	·1505	·6428	75 49	0·1514	0·5989	0·6179	J. B. Baylor.
Sault de St. Marie and Fort Brady.	46 30	84 20	1891·58	77 00·2	·1416	·6297	76 35	·1422	·5961	·6130	"
Marquette.	46 33	87 22	1891·59	75 31·2	·1581	·6323	75 13	·1585	·6008	·6213	"
Encampment, shore of Lake Superior.	46 44	87 43	1843·50	76 58·3	·1460	·6478	. .	. .	. .	. .	J. Locke.
Ontonagon.	46 52	89 20	1880·62	77 16·6	·1427	·6477	76 43	·1430	·6056	·6223	J. B. Baylor.
Eagle River.	47 27	88 23	1843·53	77 54·5	·1360	·6492	. .	. .	. .	. .	J. Locke.
Copper Harbor.	47 28	87 51	1873·58	78 02	·1350	·6509	77 14	0·1350	0·5957	0·6108	A. N. Lee.
Houghton River, Isth.	47 28	88 01	1843·53	78 28	·1321	·6607	. .	. .	. .	. .	J. Locke.
Isle Royal.	48 06	88 47	1843·57	78 07·6	0·1356	0·6589	. .	. .	. .	. .	"

MINNESOTA.

Heron Lake.	43 48	95 24	1880·75	73 31·2	0·1809	0·6378	73 02	0·1795	0·5884	0·6138	J. B. Baylor.
Wabasha.	44 18	92 07	1876·61	74 21·6	·1717	·6369	73 46	·1708	·5865	·6108	T. N. Bailey.
Red Wing.	44 34	92 32	1878·81	74 14·4	·1697	·6246	73 43	·1690	·5786	·6027	C. F. Powell.
Ft. Snelling, Reserv'n.	44 54	93 11	1880·74	74 55·6	·1669	·6416	74 27	·1666	·5987	·6215	J. B. Baylor.
St. Paul.	44 58	93 05	1891·63	74 41·2	·1661	·6291	74 29	·1660	·5978	·6204	"
Minneapolis University.	44 59	93 14	1891·59	74 29·5	·1682	·6291	74 17	·1681	·5974	·6205	G. R. Putnam.
Brainerd.	46 21	94 15	1880·65	75 42·5	·1578	·6391	75 14	·1578	·5987	·6191	J. B. Baylor.
Minnesota Point, near South Base.	46 43	92 02	1871·48	76 26	·1506	·6421	75 43	·1506	·5916	·6103	C. B. Comstock.
Minnesota Point, near North Base.	46 45	92 05	1871·47	76 21	·1530	·6485	75 38	·1530	·5973	·6166	"
Duluth.	46 46	92 04	1891·65	76 25·8	·1468	·6257	76 13	·1468	·5985	·6163	J. B. Baylor.
Glyndon.	46 52	96 40	1891·66	75 44·5	0·1565	0·6352	75 32	0·1565	0·6066	0·6265	"

MISSISSIPPI.

Shieldsboro, Bay of St. Louis.	30 18	89 19	1896·14	60 21·9	0·2766	0·5594	60 21	0·2756	0·4841	0.5571	J. B. Baylor.
East Pascagoula.	30 21	88 33	1847·46	. .	·2868	·5816	. .	. .	. .	. .	R.H.Fauntleroy.
			1848·42	60 27·2	. .	. .	. .	. .	. .	. .	J. S. Ruth and G. Davidson.
			1855·07	. .	·2882	. .	. .	. .	. .	. .	J. E. Hilgard.
Mississippi City.	30 22	89 02	1896·15	60 29·5	·2754	·5591	60 28	·2746	·4848	·5571	J. B. Baylor.
Poplarville.	30 50	89 30	1896·12	60 48·2	·2742	·5620	60 46	·2732	·4882	·5595	"
Natchez.	31 34	91 24	1890·33	61 06·0	·2711	·5609	61 02	·2690	·4860	·5555	"
Jackson.	32 19	90 12	1872·32	. .	·2612	. .	. .	·2555	. .	. .	T. C. Hilgard.
Vicksburg, Castle Hill.	32 21	90 53	1890·34	62 01·7	·2650	·5650	61 56	·2630	·4933	·5590	J. B. Baylor.
Greenville.	33 25	91 04	1890·36	63 18·2	·2586	·5755	63 11	·2568	·5081	·5693	"
Grenada.	33 47	89 50	1872·21	64 24·0	·2541	·5881	64 02	·2484	·5101	·5674	T. C. Hilgard.
Oxford, Univ. Grounds.	34 22	89 33	1890·40	64 45·6	·2502	·5867	64 36	·2488	·5241	·5801	J. B. Baylor.
Corinth.	34 56	88 35	1871·92	65 54·6	0·2420	0·5929	65 26	0·2367	0·5178	0·5694	T. C. Hilgard.

MISSOURI.

Gatewood.	36 32	91 03	1880·53	. .	0·2311	. .	. .	0·2286	. .	. .	F. E. Nipher.
Doniphan.	36 38	90 47	1880·52	. .	·2305	. .	. .	·2280	. .	. .	"
Poplar Bluffs.	36 44	90 22	1880·52	67 14·0	·2312	0·5974	66 53	·2285	0·5353	0·5820	"
Charleston.	36 56	89 19	1880·52	67 47·0	·2276	·6019	67 24	·2249	·5402	·5851	"
Howell County.	36 56	91 55	1880·59	67 37·1	·2273	·5969	67 18	·2246	·5369	·5820	"
Piedmont.	37 08	90 41	1880·54	67 35·4	·2302	·6038	67 14	·2275	·5421	·5879	"
Springfield.	37 16	93 15	1879·66	67 12·6	·2353	·6074	66 52	·2320	·5430	·5906	"
Houston.	37 19	91 55	1880·58	67 16·4	·2314	·5990	66 57	·2287	·5375	·5841	"
Lutesville.	37 20	89 59	1880·51	67 51·7	·2281	·6053	67 28	·2254	·5434	·5883	"
Bolivar.	37 35	93 24	1881·58	67 49·2	0·2299	0·6090	67 30	0·2272	0·5486	0·5937	"

Collection of the most recent magnetic dips and intensities observed in the United States and referred to the epoch 1900·0—Continued.

MISSOURI—Continued.

Name of station.	Lat.	Long.	Date.	Dip θ.	Hor. force H.	Total force F.	θ_{1900}	H_{1900}	V_{1900}	F_{1900}	Observer.
	° ′	° ′		° ′			° ′				
Pilot Knob, base and top.	37 37	90 37	1880·55	69 59·2	0·2116	0·6183	69 36	0·2089	0·5618	0·5994	F. E. Nipher.
Buffalo.	37 37	93 06	1881·58	67 57·0	·2279	·6071	67 39	·2252	·5478	·5923	"
Salem.	37 39	91 31	1880·57	68 01·8	·2278	·6089	67 42	·2251	·5489	·5932	"
Lebanon.	37 40	92 42	1879·58	67 57·6	·2292	·6108	67 37	·2262	·5493	·5940	"
"	37 40	92 42	1881·58	. .	·2286	. .	. .	·2259	. .	. .	"
Arcadia.	37 46	90 41	1880·54	68 33·9	·2249	·6154	68 12	·2222	·5556	·5984	"
Wheatland.	37 56	93 24	1881·59	68 16·6	·2234	·6036	67 58	·2207	·5454	·5883	"
Schell City.	38 03	94 05	1879·64	68 20·2	·2253	·6103	68 00	·2223	·5503	·5934	"
Cuba.	38 04	91 21	1880·57	68 18·8	·2248	·6083	67 55	·2221	·5475	·5909	"
Linn Creek.	38 04	92 47	1881·56	68 14·5	·2256	·6086	67 54	·2230	·5492	·5927	"
De Soto.	38 07	90 35	1880·55	68 45·4	·2203	·6080	68 22	·2176	·5487	·5889	"
Lawson Farm.	38 11	92 11	1881·55	68 20·6	·2267	·6143	68 00	·2242	·5549	·5984	"
Vienna.	38 12	91 54	1881·54	68 39·6	·2205	·6059	68 19	·2180	·5483	·5900	"
Tuscumbia.	38 12	92 30	1881·55	68 08·5	·2253	·6051	67 48	·2228	·5459	·5896	"
Canaan.	38 19	91 32	1881·53	68 47·3	·2208	·6103	68 25	·2183	·5518	·5934	"
Lincoln.	38 23	93 21	1881·60	68 22·6	·2241	·6081	68 02	·2216	·5494	·5919	"
Roedersville.	38 24	91 10	1881·52	69 00·5	·2207	·6161	68 38	·2182	·5578	·5989	"
Wulfert Farm.	38 24	91 16	1881·54	. .	.2205	. .	. .	·2180	. .	. .	"
Union.	38 25	90 59	1881·52	68 56·2	·2192	·6099	68 34	·2167	·5521	·5930	"
Versailles.	38 25	92 53	1881·56	68 45·2	·2206	·6088	68 25	·2181	·5514	·5929	"
Meramec River.	38 26	90 12	1819·43	70 00	. .	. .	. .	. .	. .	. .	S. H. Long.
Pacific.	38 28	90 44	1880·56	69 02·3	·2172	·6071	68 38	·2146	·5486	·5889	F. E. Nipher.
Washington.	38 31	90 59	1879·62	69 07·6	·2179	·6116	68 43	·2152	·5524	·5928	"
Windsor.	38 32	93 33	1881·60	68 26·2	·2217	·6032	68 08	·2192	·5462	·5884	"
Jefferson City.	38 35	92 09	1879·61	68 55·7	·2182	·6069	68 33	·2156	·5487	·5895	"
Côte sans dessein.	38 36	91 56	1819·51	70 50	. .	. .	. .	. .	. .	. .	S. H. Long.
St. Louis, near Tower Grove.	38 37	90 15	1886·75	69 28·5	·2157	·6152	69 11	·2140	·5628	·6022	C. H. Sinclair.
St. Louis, near Washington ave. and 18th st.	38 38	90 12	1879·68	. .	·2150	. .	. .	·2124	. .	. .	F. E. Nipher.
St. Louis, Forest Park.	38 38	90 16	1896·34	69 21·5	·2139	·6068	69 17	·2135	·5645	·6036	R. L. Faris.
Holden.	38 38	94 03	1879·63	68 29·3	·2230	·6081	68 09	·2204	·5496	·5921	F. E. Nipher.
California.	38 39	92 38	1881·64	68 46·7	·2182	·6028	68 27	·2159	·5467	·5878	"
Zimmerman Place.	38 41	93 34	1881·61	68 13·2	·2272	·6123	67 53	·2249	·5533	·5971	"
Near Clayton.	38 41	90 19	1881·50	. .	·2116	. .	. .	·2093	. .	. .	"
Hermann.	38 42	91 27	1872·74	69 21·3	·2151	·6101	. .	·2115	. .	. .	T. C. Hilgard.
Sedalia.	38 42	93 15	1879·60	68 49·7	·2214	·6130	68 28	·2189	·5549	·5965	F. E. Nipher.
Marion.	38 42	92 25	1881·65	68 48·1	·2185	·6043	68 28	·2163	·5483	·5893	"
Dardenne.	38 43	90 42	1881·67	69 02·7	·2188	·6118	68 40	·2166	·5546	·5955	"
Bellefontaine.	38 43	90 12	1819·48	70 00	. .	. .	. .	. .	. .	. .	S. H. Long.
Pattonsville.	38 43	90 30	1881·68	69 39·6	·2122	·6105	69 17	·2100	·5552	·5936	F. E. Nipher.
Opposite St. Charles.	38 44	90 31	1881·68	70 08·0	·2076	·6109	69 45	·2054	·5568	·5934	"
St. Charles.	38 45	90 30	1878·52	69 29·9	·2069	·5907	69 03	·2044	·5338	·5716	"
Warrenton.	38 46	91 08	1881·67	69 10·4	·2161	·6078	68 48	·2140	·5517	·5917	"
O'Fallon.	38 47	90 43	1880·83	. .	·2148	. .	. .	·2126	. .	. .	"
Florissant.	38 47	90 17	1881·68	. .	·2120	. .	. .	·2100	. .	. .	"
Wright City.	38 47	91 00	1878·53	69 11·2	·2123	·5975	68 45	·2100	·5400	·5794	"
Providence.	38 49	92 28	1881·65	69 00·3	·2179	·6082	68 39	·2158	·5520	·5927	"
Clarks Fork.	38 51	92 40	1881·64	69 15·9	·2173	·6138	68 56	·2152	·5586	·5987	"
Sweet Springs.	38 55	93 29	1881·62	68 57·4	·2187	·6091	68 37	·2166	·5533	·5941	"
Columbia.	38 56	92 20	1878·54	69 19·1	·2148	·6082	68 55	·2125	·5511	·5906	"
Franklin.	38 57	92 57	1819·54	69 30	. .	. .	. .	. .	. .	. .	S. H. Long.
McCredie.	38 59	91 55	1881·66	69 05·0	·2170	·6078	68 43	·2150	·5518	·5923	F. E. Nipher.
Herndon.	39 00	93 21	1881·62	. .	·2178	. .	. .	·2158	. .	. .	"
Arrow Rock.	39 06	93 00	1881·63	. .	·2140	. .	. .	·2120	. .	. .	"
Camp on Missouri River.	39 06	93 00	1819·57	69 45	. .	. .	. .	. .	. .	. .	S. H. Long.
Kansas City.	39 07	94 38	1879·58	68 58·6	·2200	·6132	68 38	·2177	·5565	·5976	F. E. Nipher.
Marshall.	39 08	93 17	1881·62	69 34·0	·2144	·6141	69 15	·2124	·5606	·5994	"
Charanton.	39 10	92 20	1819·56	69 50	. .	. .	. .	. .	. .	. .	S. H. Long.
Fort Wage.	39 10	94 18	1819·59	69 18	. .	. .	. .	. .	. .	. .	"
Mexico.	39 11	91 52	1878·53	69 27·6	·2175	·6199	69 02	·2152	·5615	·6013	F. Nipher.
Lexington.	39 12	93 53	1879·64	69 13·7	·2168	·6113	68 53	·2146	·5556	·5957	"
Glasgow.	39 13	92 50	1879·55	69 57·4	·2105	·6142	69 35	·2082	·5594	·5969	F. E. Nipher.
Carrollton.	39 21	93 33	1879·57	69 29·0	·2153	·6143	69 07	·2130	·5584	·5975	"
Cow Island.	39 25	94 00	1819·64	69 50	. .	. .	. .	. .	. .	. .	S. H. Long.
Louisiana, mean position.	39 28	91 05	1878·56	69 54·0	0·2106	0·6128	69 27	0·2082	0·5554	0·5932	C. F. Powell and F. E. Nipher.

Collection of the most recent magnetic dips and intensities observed in the United States and referred to the epoch 1900·0—Continued.

MISSOURI—Continued.

Name of station.	Lat.	Long.	Date.	Dip θ.	Hor. force H.	Total force F.	θ_{1900}	H_{1900}	V_{1900}	F_{1900}	Observer.
	° ′	° ′		° ′			° ′				
Hannibal.	39 44	91 24	1878·55	70 14·3	0·2082	0·6158	69 48	0·2058	0·5594	0·5961	F. E. Nipher.
St. Joseph.	39 46	94 49	1879·57	69 43·3	·2142	·6180	69 22	·2120	·5630	·6016	"
Macon.	39 46	92 30	1878·59	70 07·6	·2081	·6122	69 42	·2058	·5564	·5933	"
Chillicothe.	39 47	93 34	1879·56	70 19·3	·2083	·6186	69 57	·2061	·5648	·6012	"
Canton.	40 09	91 36	1878·56	70 27·8	·2044	·6112	70 01	·2021	·5558	·5914	"
Kirksville.	40 12	92 37	1878·59	70 40·6	·2032	·6141	70 15	·2009	·5595	·5944	"
Marysville.	40 21	94 58	1879·59	70 05·8	·2088	·6133	69 45	·2066	·5602	·5970	"
Memphis.	40 27	92 13	1878·58	70 26·8	0·2060	0·6155	70 01	0·2037	0·5602	0·5961	"

MONTANA.

Fort Ellis.	45 40	110 58	1882·66	71 43·4	0·1959	0·6246	71 31	0·1939	0·5801	0·6116	B. A. Colonna.
Bozeman.	45 40	111 02	1896·46	71 39·2	·1909	·6065	71 37	·1906	·5735	·6044	R. L. Faris.
Fort Custer.	45 45	107 48	1882·56	72 23·4	·1921	·6351	72 07	·1901	·5891	·6192	B. A. Colonna.
Billings.	45 47	108 30	1896·45	72 18·2	·1862	·6125	72 16	·1859	·5813	·6104	R. L. Faris.
Forsyth.	46 15	106 39	1896·44	73 04·4	·1803	·6194	73 01	·1800	·5894	·6163	"
Townsend.	46 19	111 31	1896·47	72 09·0	·1865	·6086	72 07	·1862	·5770	·6065	"
Miles City.	46 24	105 53	1896·43	73 35·0	·1757	·6216	73 31	·1757	·5939	·6193	"
Helena.	46 37	112 02	1896·48	72 11·4	·1852	·6057	72 09	·1849	·5741	·6031	"
Glendive.	47 06	104 43	1896·42	74 20·4	·1685	·6244	74 17	·1684	·5984	·6216	"
Cascade.	47 16	111 42	1896·48	72 37·0	·1835	·6143	72 35	·1832	·5840	·6120	"
Fort Benton.	47 49	110 40	1896·50	73 44·5	·1733	·6189	73 42	·1731	·5920	·6168	"
Glasgow.	48 12	106 37	1896·51	74 46·6	·1628	·6201	74 43	·1627	·5954	·6173	"
South Crossing, Kootenay River.	48 22	115 21	1861·51	72 48·1	·1832	·6195	. .	. .	. .	. .	R. W. Haig.
Havre.	48 34	109 37	1896·50	74 27·1	·1660	·6192	74 24	0·1658	0·5939	0·6166	R. L. Faris.
Kootenay River.	48 40	115 17	1861·53	73 07·2	·1800	·6198	. .	. .	. .	. .	R. W. Haig.
Tobacco Plains.	48 57	115 08	1861·63	73 22·9	·1777	·6214	. .	. .	. .	. .	"
Camp Kootenay East.	48 59	115 12	1861·5	73 11	·1775	·6135	. .	. .	. .	. .	J. S. Harris.
Camp Kishenehu.	49 00	114 21	1861·5	73 46·8	0·1747	0·6257	. .	. .	. .	. .	"

NEBRASKA.

Big Sandy River.	40 12	97 12	1858·6	69 33	. .	. .	. .	. .	. .	. .	J. H. Simpson.
Little Blue River.	40 15	98 10	1858·6	69 51	. .	. .	. .	. .	. .	. .	"
Fort Kearney.	40 38	98 56	1858·7	70 15	. .	. .	. .	. .	. .	. .	"
Camp No. 20.	40 40	99 54	1858·7	69 37	. .	. .	. .	. .	. .	. .	
Grand Island, near depot	40 55	98 23	1872·82	70 15·5	0·2091	0·6190	69 48	0·2051	0·5574	0·5940	T. C. Hilgard.
Grand Island.	40 55	98 18	1878·66	70 17·7	·2106	·6246	69 56	·2075	·5681	·6048	T. E. Thorpe.
Camp No. 22.	41 05	100 50	1858·7	69 46	. .	. .	. .	. .	. .	. .	J. H. Simpson.
Sidney.	41 08	102 55	1872·82	69 23·9	·2139	·6079	69 02	·2098	·5475	·5863	T. C. Hilgard.
North Platte.	41 11	100 45	1872·82	69 41·1	·2114	·6089	69 17	·2073	·5482	·5860	"
Omaha.	41 16	95 56	1891·67	70 48·5	·2008	·6109	70 39	·2000	·5695	·6035	G. R. Putnam.
Ash Hollow.	41 21	102 03	1858·7	70 03	. .	. .	. .	. .	. .	. .	J. H. Simpson.
Chimney Rock.	41 43	103 30	1858·7	70 05	. .	. .	. .	. .	. .	. .	"
Norfolk.	42 02	97 22	1896·36	71 06·8	·1986	·6135	71 03	·1982	·5773	·6104	R. L. Faris.
Newport.	42 36	99 21	1896·37	71 18·3	·1978	·6171	71 15	·1974	·5814	·6140	"
Chadron.	42 50	103 00	1896·38	71 01·3	0·2001	0·6152	70 58	0·1997	0·5789	0·6123	"

NEVADA.

Pioche.	37 59	114 03	1883·74	65 36	0·2380	0·5762	65 31	0·2326	0·5107	0·5613	W. Eimbeck & G. F. Bird.
White Pine.	38 19	115 30	1881·89	64 04·1	·2485	·5681	63 59	·2422	·4963	·5522	W. Eimbeck & R. A. Marr.
Wheeler Peak.	38 59	114 19	1882·89	64 59·9	·2430	·5749	64 55	·2379	·5083	·5612	"
Genoa, Carson Valley.	39 00	119 40	1859·5	64 12	. .	. .	. .	. .	. .	. .	J. H. Simpson.
Genoa, near astro. sta.	39 00	119 50	1889·59	64 04·4	·2406	·5503	64 02	·2371	·4869	·5415	R A. Marr.
Tres Pinos, Lehman Canyon.	39 00	114 14	1882·92	65 00·8	·2431	·5756	64 56	·2380	·5089	·5618	W Eimbeck & R. A. Marr.
Lehman Ranche, Snake Valley.	39 01	114 08	1882·94	65 02·4	0·2438	0·5777	64 57	0·2387	0·5106	0·5636	"

Collection of the most recent magnetic dips and intensities observed in the United States and referred to the epoch 1900·0—Continued.

NEVADA—Continued.

Name of station.	Lat.	Long.	Date.	Dip θ.	Hor. force H.	Total force F.	θ_{1900}	H_{1900}	V_{1900}	F_{1900}	Observer.
	° ′	° ′		° ′			° ′				
Big Bend, Walker River.	39 09	118 56	1859·5	63 37	. .	. .	. .	. .	. .	. .	J. H. Simpson.
Carson City, Freund's Observatory.	39 10	119 46	1895·85	63 41·8	0·2475	0·5585	63 41	0·2461	0·4975	0·5551	C. H. Sinclair.
Carson Lake.	39 24	118 30	1859·5	64 02	. .	. .	. .	. .	. .	. .	J. H. Simpson.
Austin.	39 29	117 04	1881·42	64 49·0	·2422	·5692	64 43	·2364	·5004	·5535	W. Eimbeck & R. A. Marr.
Reese River.	39 29	117 03	1858·9	64 25	. .	. .	. .	. .	. .	. .	J. H. Simpson.
Reno, near court-house.	39 30	119 49	1881·28	64 14·1	·2452	·5640	64 10	·2394	·4944	·5494	W. Eimbeck & R. A. Marr.
Verdi.	39 31	119 59	1889·53	64 23·1	·2422	·5602	64 21	·2387	·4971	·5513	R. A. Marr.
Eureka, Story Hill.	39 31	115 58	1881·38	65 08·4	·2406	·5723	65 03	·2365	·5083	·5607	W. Eimbeck & R. A. Marr.
Diamond Peak.	39 35	115 49	1881·71	65 12·3	·2402	·5727	65 07	·2344	·5054	·5572	"
Mt. Callahan.	39 42	116 57	1881·54	65 07·4	·2407	·5722	65 02	·2349	·5046	·5566	"
Ko-bah Valley.	39 44	116 10	1858·9	64 56	. .	. .	. .	. .	. .	. .	J. H. Simpson.
Hot Springs.	39 47	118 56	1881·29	64 46·5	·2430	·5703	64 43	·2372	·5021	·5554	W. Eimbeck & R. A. Marr.
Antelope Valley.	39 47	114 12	1859·5	65 16	. .	. .	. .	. .	. .	. .	J. H. Simpson.
Cho-Keep Pass.	39 54	115 45	1858·9	65 19	. .	. .	. .	. .	. .	. .	"
Huntingdon Spring.	40 01	115 19	1859·5	65 25	. .	. .	. .	. .	. .	. .	"
Mineral Hill.	40 10	116 12	1881·40	65 40·7	·2375	·5767	65 33	·2327	·5118	·5622	W. Eimbeck & R. A. Marr.
Rye Patch.	40 26	118 18	1881·29	65 23·9	·2379	·5714	65 19	·2331	·5071	·5581	"
Battle Mountain.	40 40	116 50	1881·31	65 51·2	·2359	·5766	65 44	·2311	·5126	·5623	"
Elko, State University.	40 47	115 46	1881·32	66 23·0	·2325	·5804	66 16	·2282	·5190	·5670	"
Winnemucca, court-house.	40 59	117 44	1881·30	65 59·2	·2358	·5795	65 53	·2315	·5170	·5665	"
Wells Station.	41 07	114 56	1881·33	66 49·9	·2300	·5847	66 43	·2257	·5244	·5710	"
Tecoma.	41 20	114 06	1881·33	67 08·0	0·2281	0·5870	66 59	0·2240	0·5272	0·5728	"

NEW HAMPSHIRE.

Troy.	42 50	72 11	1861·64	74 45·7	0·1650	0·6276	73 10	. .	. .	. .	G. W. Dean & R. E. Halter.
Monadnock.	42 52	72 06	1861·59	74 44·4	. .	. .	73 08	. .	. .	. .	"
Chesterfield Factory village.	42 54	72 26	1890·71	73 54·7	·1677	·6051	73 26	0·1700	0·5714	0·5962	J. B. Baylor.
Unkonoonuc.	42 59	71 35	1848·77	75 08·7	·1603	·6251	. .	. .	. .	. .	J. S. Ruth.
Portsmouth, mean of six stations.	43 04	70 45	1844·5	74 51·0	. .	. .	73 55	. .	. .	. .	J. D. Graham & A. W. Whipple.
Patuccawa.	43 07	71 12	1849·63	76 49·5	·1426	·6257	. .	. .	. .	. .	C. O. Boutelle.
Gunstock.	43 31	71 22	1860·58	75 43·6	·1568	·6361	74 05	. .	. .	. .	G. W. Dean.
Hanover, ¾ mile west of observatory.	43 42	72 18	1890·72	74 43·4	·1608	·6104	74 15	·1631	·5782	·6008	J. B. Baylor.
Mt. Washington.	44 16	71 18	1845·46	75 45·0	·1528	·6211	. .	. .	. .	. .	J. Locke.
Camp on Mt. Washington, 1 m. west of sum't.	44 16	71 19	1845·46	75 50·8	·1529	·6253	. .	. .	. .	. .	"
Fabyan Hotel.	44 16	71 25	1845·47	75 39·9	·1538	6212	. .	. .	. .	. .	"
Glen House, 4 miles east of Mt. Washington.	44 16	71 14	1856·61	75 56	. .	. .	74 08	. .	. .	. .	K. Friesach.
Littleton.	44 19	71 48	1873·74	75 39·1	·1558	·6285	74 20	·1619	·5772	·5995	T. C. Hilgard.
Gorham, Soldier Hill.	44 22	71 15	1873·73	75 35·6	·1572	·6319	74 17	0·1633	0·5804	0·6028	"
Gorham.	44 27	71 13	1845·46	75 33·4	0·1561	0·6261	. .	. .	. .	. .	J. Locke.
Halls Stream.	45 01	71 30	1845·5	76 23·5	. .	. .	. .	. .	. .	. .	J. D. Graham.

NEW JERSEY.

Cape May, Broadway and Beach avenue.	38 56	74 56	1891·41	70 37·1	0·1996	0·6016	70 23	0·2023	0·5716	0·6063	G. R. Putnam.
Cape May Light-House.	38 56	74 58	1874·49	71 28·5	·1975	·6216	70 38				T. C. Hilgard.
Townbank.	38 59	74 58	1846·50	71 23·6	·1968	·6169	. .	. .	. .	. .	J. Locke.
Egg Island Lt.-House.	39 10	75 08	1846·48	71 45·1	·1939	·6194	. .	. .	. .	. .	"
Port Norris.	39 15	75 01	1846·48	71 39·6	·1942	·6171	. .	. .	. .	. .	"
Atlantic City.	39 22	74 25	1860·65	71 47·0	·1939	·6202	70 36	. .	. .	. .	C. A. Schott.
Pine Mount.	39 25	75 20	1846·46	71 41·4	0·1954	0·6219	. .	. .	. .	. .	J. Locke.

Collection of the most recent magnetic dips and intensities observed in the United States and referred to the epoch 1900·0—Continued.

NEW JERSEY—Continued.

Name of station.	Lat.	Long.	Date.	Dip θ.	Hor. force H.	Total force F.	θ_{1900}	H_{1900}	V_{1900}	F_{1900}	Observer.
	° ′	° ′		° ′			° ′				
Hawkins.	39 26	75 17	1846·47	71 42·6	0·1948	0·6206	. .	. .	. .	. .	J. Locke.
Long Beach.	39 32	74 16	1860·64	71 58·5	·1916	·6193	70 48	. .	. .	. .	C. A. Schott.
Tuckerton.	39 36	74 20	1846·85	72 12·3	·1873	·6130	. .	. .	. .	. .	T. J. Lee.
Church Landing.	39 41	75 31	1846·42	71 22·0	·1988	·6220	. .	. .	. .	. .	J. Locke.
Barnegat Light-House.	39 46	74 06	1860·64	72 05·3	·1894	·6159	70 54	. .	. .	. .	C. A. Schott.
Chew.	39 48	75 10	1846·53	72 14·4	·1893	·6206	. .	. .	. .	. .	J. Locke.
White Hill.	40 08	74 44	1846·38	72 06·2	·1912	·6223	. .	. .	. .	. .	"
Trenton.	40 13	74 45	1841·31	71 59	·1935	·6252	. .	. .	. .	. .	"
Princeton College.	40 21	74 40	1844·39	72 40·2	·1852	·6215	. .	. .	. .	. .	"
Princeton, Rocky Hill.	40 23	74 39	1844·40	72 35·0	·1867	·6238	. .	. .	. .	. .	"
Mount Rose.	40 22	74 43	1852·62	72 42·5	·1904	·6407	. .	. .	. .	. .	J. E. Hilgard.
Sandy Hook, near inner beach.	40 28	74 00	1895·47	71 48·2	·1894	·6065	71 44	0·1884	0·5708	0·6011	J. B. Baylor.
New Brunswick, Rutgers College.	40 30	74 27	1895·67	71 54·4	·1879	·6051	71 47	0·1886	0·5731	0·6033	"
Snake Hill.	40 43	74 06	1844·3	72 45·4	. .	. .	. .	. .	. .	. .	J. Locke.
Newark.	40 45	74 10	1846·37	72 52·2	0·1828	0·6205	. .	. .	. .	. .	"
Fort Lee.	40 51	73 58	1844·3	72 41	. .	. .	. .	. .	. .	. .	"
Paterson.	40 56	74 10	1844·3	(72° to 75° (?))	. .	. .	. .	. .	. .	. .	"

NEW MEXICO.

San Luis Springs.	31 20	108 48	1855·30	57 37	0·2889	0·5395	. .	. .	. .	. .	W. H. Emory.
Agua del Perro.	31 21	108 20	1855·25	57 28	·2838	·5279	. .	. .	. .	. .	"
Carrizalillo.	31 51	107 56	1855·16	58 31	·2824	·5408	. .	. .	. .	. .	"
Deming.	32 17	107 50	1888·90	59 12·8	·2785	·5441	59 13	0·2738	0·4596	0·5349	J. B. Baylor.
Doña Ana.	32 22	106 47	1851	59 06	. .	. .	. .	. .	. .	. .	W. H. Emory.
Station IX.	32 22	107 24	1851	59 09	. .	. .	. .	. .	. .	. .	"
Ojo de Inez.	32 45	108 14	1851	59 18	. .	. .	. .	. .	. .	. .	"
Copper Mines.	32 47	108 04	1851	59 17	. .	. .	. .	. .	. .	. .	"
Fort Craig.	33 38	107 01	1888·89	61 02·0	·2692	·5558	61 01	·2647	·4778	·5463	J. B. Baylor.
Isleta.	34 54	106 40	1853·85	62 24	·2679	·5782	. .	. .	. .	. .	J. C. Ives & A. W. Whipple.
Rio San José.	35 01	107 14	1853·86	63 18	·2602	·5791	. .	. .	. .	. .	"
Cedar Forest.	35 01	108 55	1853·91	61 40	·2733	·5759	. .	. .	. .	. .	"
Agua Fria.	35 02	107 58	1853·88	62 05	·2709	·5787	. .	. .	. .	. .	"
Prescription Rock, El Moro.	35 03	108 14	1853·88	62 03	·2699	·5759	. .	. .	. .	. .	"
Albuquerque.	35 04	106 39	1888·88	62 33·3	·2604	·5649	62 31	·2570	·4940	·5568	J. B. Baylor.
Covero.	35 05	107 26	1853·87	62 26	·2680	·5791	. .	. .	. .	. .	J. C. Ives & A. W. Whipple.
Hay Camp.	35 05	107 39	1853·87	62 39	. .	?·5372	. .	. .	. .	. .	"
Arch Spring.	35 05	108 48	1853·90	61 55	·2715	·5768	. .	. .	. .	. .	"
Zuni River.	35 06	108 39	1853·89	62 02	·2705	·5768	. .	. .	. .	. .	"
Fort Marcy, Santa Fe.	35 41	105 57	1895·23	63 29·3	·2551	·5715	63 28	·2535	·5077	·5676	E. Smith.
Fort Union.	35 54	105 01	1888·87	63 50·2	0·2504	0·5677	63 47	0·2470	0·5017	0·5591	J. B. Baylor.

NEW YORK.

Cole, Staten Island.	40 32	74 14	1846·36	72 34·2	0·1857	0·6201	. .	. .	. .	. .	J. Locke.
Fire Island, near L. H.	40 38	73 13	1860·66	73 00·2	·1798	·6151	71 21	0·1870	0·5540	0·5847	C. A. Schott.
Flatbush, Mt. Prospect, Brooklyn.	40 40	73 58	1860·72	72 40·8	·1868	·6275					"
New York Harbor, Governors Island.	40 41	74 01	1855·60	72 46·3	·1810	·6109					"
New York, Columbia College, old site.	40 43	74 00	1844·63	72 37·8	·1877	·6288					E. Sabine & J. Renwick.
"	"	"	1845·68	72 40·6	. .	. .	71 50	0·1871	0·5704	0·6003	J. Renwick.
New York, Central Park, west of mall.	40 46	73 58	1872·84	72 35·8	·1836	·6138					A. H. Scott.
New York, Riverside Park.	40 49	73 58	1885·80	72 12·0	·1860	·6084					J. B. Baylor.
New York, Bloomingdale Asylum, Manhattanville.	40 50	73 57	1846·32	72 39·0	0·1848	0·6197					J. Locke.

Collection of the most recent magnetic dips and intensities observed in the United States and referred to the epoch 1900·0—Continued.

NEW YORK—Continued.

Name of station.	Lat.	Long.	Date.	Dip θ.	Hor. force H.	Total force F.	θ_{1900}	H_{1900}	V_{1900}	F_{1900}	Observer.
	° ′	° ′		° ′			° ′				
Patchogue, west of Ocean House.	40 45	73 01	1875·59	72 45·4	0·1830	0·6174	71 44	0·1875	0·5681	0·5983	J. M. Poole.
Legget.	40 49	73 54	1847·79	72 52·7	·1833	·6227	. .	. .	. .	. .	R. H. Fauntleroy.
West Hills, Long Isd.	40 49	73 26	1865·61	72 56·8	·1812	·6178	71 30	·1874	·5602	·5906	E. Goodfellow.
Ruland, Long Island.	40 51	73 02	1865·40	72 54·9	·1819	·6191	71 28	·1881	·5611	·5918	"
Oyster Bay.	40 52	73 32	1844·71	72 58·5	·1795	·6131	. .	. .	. .	. .	J. Renwick.
New Rochelle.	40 52	73 47	1844·69	72 44·0	·1773	·5972	. .	. .	. .	. .	"
Lloyd Harbor, Huntington.	40 56	73 25	1844·71	72 50·6	·1778	·6029	. .	. .	. .	. .	"
East Hampton.	40 57	72 11	1875·64	72 47·3	·1838	·6211	71 46	·1883	·5715	·6017	J. M. Poole.
Port Chester.	41 00	73 40	1844·70	72 53·4	. .	. .	. .	. .	. .	. .	J. Renwick.
Sag Harbor.	41 00	72 17	1860·68	73 20·9	·1800	·6280	71 43	·1872	·5666	·5968	C. A. Schott.
Greenport.	41 06	72 21	1845·63	72 57·9	·1775	·6060	. .	. .	. .	. .	J. Renwick.
Port Jervis, Carpenters Point.	41 21	74 42	1873·47	73 14·3	·1797	·6231	72 08	·1845	·5724	·6013	E. Smith.
West Point.	41 23	73 57	1842·80	73 31·5	·1792	·6318	. .	. .	. .	. .	J. H. Lefroy & W. H. C. Bartlett.
"	"	"	1843·5	73 12·2	·1860	·6437	. .	. .	. .	. .	A. D. Bache.
Cold Spring.	41 25	73 58	1855·66	73 54·8	·1747	·6308	. .	. .	. .	. .	C. A. Schott.
Poughkeepsie, mean of two stations.	41 42	73 56	1844·45	74 05·0	·1720	·6272	. .	. .	. .	. .	J. Locke.
Owego.	42 08	76 17	1841·6	74 13·9	·1666	·6131	. .	. .	. .	. .	A. D. Bache.
Belvedere.	42 13	78 06	1841·6	74 09·5	·1692	·6198	. .	. .	. .	. .	"
Mayville.	42 16	79 40	1874·59	74 05·0	·1721	·6276	73 14	·1740	·5774	·6031	F. E. Hilgard & W. Diehl.
Ellicottsville.	42 18	78 44	1841·6	74 17·8	·1718	·6347	. .	. .	. .	. .	A. D. Bache.
Bath.	42 21	77 21	1874·57	74 15·5	·1717	·6329	73 12	·1739	·5760	·6017	F. E. Hilgard & W. Diehl.
Oxford.	42 26	75 40	1885·73	73 45·8	·1702	·6087	73 09	·1721	·5682	·5937	J. B. Baylor.
Ithaca, Cornell Univ'y.	42 27	76 29	1890·82	73 49·5	·1692	·6074	73 26	·1704	·5728	·5977	"
Dunkirk.	42 29	79 21	1841·6	74 17·2	·1670	·6166	. .	. .	. .	. .	A. D. Bache.
Greenbush.	42 38	73 44	1855·66	75 11·1	·1654	·6469	73 20	. .	. .	. .	C. A. Schott.
Albany, Dudley Observatory.	42 40	73 45	1896·70	73 47·1	·1698	·6081					
Albany, V. Colvin's residence.	42 40	73 47	1896·71	73 41·4	·1717	·6117	73 28	·1695	·5710	·5955	R. L. Faris.
Penn Yan.	42 40	77 05	1887·4	73 50	·1728	·6206	73 18	·1745	·5817	·6073	L. F. Bellinger & G. Sterling.
Sherburne.	42 41	75 33	1875·67	74 15·1	·1718	·6330	73 14	·1760	·5841	·6101	J. M. Poole.
Troy.	42 44	73 41	1843·6	74 47·9	·1648	·6285	. .	. .	. .	. .	A. D. Bache.
Otsego.	42 47	74 42	1882·63	73 55·4	·1694	·6116	73 07	·1723	·5677	·5933	J. B. Baylor.
Schenectady.	42 48	73 57	1843·5	74 54·8	·1615	·6205	. .	. .	. .	. .	A. D. Bache.
Cook Point.	42 52	77 17	1888·43	. .	·1716	. .	. .	·1729	. .	. .	J. F. Hayford & J. C. Dowling.
Geneva.	42 53	77 02	1843·5	74 33·2	·1676	·6293	. .	. .	. .	. .	A. D. Bache.
Buffalo, Fort Porter.	42 55	78 54	1885·71	74 04·7	·1692	·6168	73 21	·1726	·5771	·6024	J. B. Baylor.
Fenner.	42 57	75 45	1882·76	74 18·4	·1681	·6215	73 32	·1697	·5741	·5987	"
Howlett.	43 00	76 17	1883·66	74 17·5	·1671	·6173	73 34	·1695	·5746	·5992	"
Syracuse.	43 03	76 09	1843·5	74 51·2	·1640	·6276	. .	. .	. .	. .	A. D. Bache.
Clyde.	43 03	76 52	1883·72	74 31·8	·1651	·6188	73 49	·1673	·5765	·6002	J. B. Baylor.
Clinton, Hamilton College.	43 03	75 24	1874·82	74 37·5	·1676	·6321	73 35	·1714	·5817	·6065	T. C. Hilgard.
Niagara Falls.	43 04	79 04	1874·58	74 37·7	·1681	·6341	73 47	·1702	·5852	·6096	F. E. Hilgard & W. Diehl.
Utica.	43 07	75 13	1844·46	74 48·8	·1652	·6308	. .	. .	. .	. .	J. Locke.
Rochester.	43 09	77 38	1874·58	74 38·5	·1675	·6324	73 48	·1713	·5897	·6140	F. E. Hilgard & W. Diehl.
Lockport.	43 11	78 46	1844·46	74 44·2	·1659	·6308	. .	. .	. .	. .	J. Locke.
Charlotte.	43 13	77 40	1873·41	74 50	·1675	·6403	73 57	·1715	·5962	·6203	A. N. Lee.
Fort Niagara.	43 15	79 04	1859·45	74 51	·1653	·6324	73 30	. .	. .	. .	W. P. Smith.
Loomis.	43 21	76 17	1882·86	74 47·7	·1622	·6185	74 03	·1647	·5762	·5994	J. B. Baylor.
Pen Mount.	43 23	75 16	1882·64	74 31·4	·1663	·6231	73 43	·1692	·5793	·6034	"
Prospect.	43 26	73 45	1882·60	74 43·5	·1625	·6169	73 52	·1654	0·5718	0·5953	"
Oswego.	43 26	76 35	1843·6	75 07·1	·1599	0·6226	. .	. .	. .	. .	A. D. Bache.
Mannsville.	43 43	76 03	1884·44	. .	0·1599	. .	. .	0·1625	. .	. .	J. B. Boutelle.

Collection of the most recent magnetic dips and intensities observed in the United States and referred to the epoch 1900·0—Continued.

NEW YORK—Continued.

Name of station.	Lat.	Long.	Date.	Dip θ.	Hor. force H.	Total force F.	θ_{1900}	H_{1900}	V_{1900}	F_{1900}	Observer.
	° ′	° ′		° ′			° ′				
Pierrepont Manor.	43 44	76 03	1874·80	75 25·1	0·1600	0·6355	74 22	0·1640	0·5860	0·6086	T. C. Hilgard.
Sacketts Harbor.	43 57	76 07	1873·40	75 24	·1600	·6349	74 18	·1642	·5842	·6069	A. N. Lee.
Potsdam.	44 37	75 00	1874·79	76 03·3	·1507	·6252	75 00	·1545	·5766	·5969	T. C. Hilgard.
Rouse Point.	45 00	73 21	1879·75	76 18·2	0·1508	0·6368	75 18	0·1546	0·5893	0·6093	J. B. Baylor.

NORTH CAROLINA.

Ft. Johnson, Smithville.	33 55	78 01	1887·20	65 34·0	0·2387	0·5771	65 08	0·2383	0·5140	0·5667	J. B. Baylor.
Wilmington.	34 13	77 56	1891·37	66 00·9	·2361	·5808	65 43	·2360	·5231	·5739	"
Lake Waccamaw.	34 18	78 33	1891·36	65 57·4	·2340	·5744	65 40	·2339	·5171	·5677	"
Fair Bluff.	34 19	78 58	1891·36	65 48·0	·2370	·5781	65 31	·2369	·5202	·5718	"
Burgaw.	34 31	77 53	1891·38	66 19·1	·2327	·5793	66 01	·2326	·5229	·5723	"
Beaufort.	34 43	76 40	1880·04	66 49·8	·2331	·5924	66 08	·2330	·5266	·5760	"
Warsaw.	34 59	77 56	1891·39	66 42·4	·2282	·5770	66 25	·2282	·5228	·5704	"
Portsmouth Island.	35 04	76 03	1871·25	67 13·6	·2303	·5949	66 16	·2300	·5231	·5715	A. T. Mosman.
Newbern.	35 07	77 03	1887·21	67 02·0	·2269	·5815	66 34	·2269	·5235	·5706	J. B. Baylor.
Charlotte.	35 14	80 46	1873·58	67 07·5	·2346	·6035	66 25	·2326	·5328	·5814	F. E. Hilgard & J. M. Poole.
Kinston.	35 16	77 31	1891·39	67 13·9	·2256	·5829	66 56	·2256	·5297	·5757	J. B. Baylor.
Goldsboro.	35 23	77 52	1891·40	66 54·0	·2280	·5812	66 36	·2280	·5269	·5741	"
Washington.	35 32	76 56	1891·43	67 20·1	·2248	·5835	67 02	·2248	·5304	·5761	"
Asheville.	35 36	82 30	1873·60	67 26·7	·2341	·6103	66 47	·2320	·5409	·5886	F. E. Hilgard & J. M. Poole.
Salisbury.	35 40	80 20	1873·58	67 46·0	·2315	·6118	67 06	·2295	·5434	·5898	"
Wilson.	35 43	77 47	1891·42	67 18·0	·2254	·5841	67 00	·2254	·5309	·5768	J. B. Baylor.
Raleigh.	35 47	78 38	1887·23	67 16·4	·2266	·5866	66 51	·2265	·5298	·5762	"
Morganton.	35 47	81 30	1873·59	67 15·3	·2336	·6042	66 36	·2316	·5352	·5832	F. E. Hilgard & J. M. Poole.
Bodies Island.	35 48	75 32	1846·98	68 18·1	·2193	·5929	. .	. .	. .	. .	C. O. Boutelle.
Jamesville.	35 48	76 47	1891·44	67 27·1	·2236	·5832	67 08	·2236	·5303	·5754	J. B. Baylor.
Sand Island.	35 50	75 40	1876·1	68 05·4	·2256	·6047	67 18	·2256	·5393	·5845	E. Smith.
Warm Spring.	35 50	82 48	1833·7	67 39	. .	. .	. .	. .	. .	. .	J. N. Nicollet.
Tarboro.	35 53	77 30	1891·43	67 56·6	·2207	·5876	67 38	·2207	·5363	·5800	J. B. Baylor.
Edenton.	36 02	76 32	1891·44	67 45·6	·2212	·5843	67 27	·2212	·5327	·5769	"
Greensboro.	36 03	79 40	1873·57	68 35·3	·2260	·6191	67 48	·2242	·5493	·5933	F. E. Hilgard & J. M. Poole.
Pocre.	36 03	81 09	1895·67	67 23·6	·2275	·5918	67 15	·2274	·5423	·5880	A. H. Buchanan.
Shellbank.	36 04	75 44	1847·26	68 37·8	·2173	·5966	. .	. .	. .	. .	C. O. Boutelle & G. Davidson.
Stevenson Point.	36 06	76 11	1847·12	68 54·5	·2149	·5971	. .	. .	. .	. .	C. O. Boutelle.
Elizabeth City.	36 18	76 06	1891·45	68 06·9	·2199	·5900	67 47	·2199	·5384	·5816	J. B. Baylor.
Weldon.	36 27	77 25	1887·24	68 06·8	·2194	·5887	67 39	·2195	·5338	·5772	"
Nottoway River.	36 32	76 56	1887·17	68 31·6	·2184	·5966	68 02	·2185	·5416	·5841	C. H. Sinclair.
N. Ca. & Va. boundary.	36 33	76 12	1886·99	68 29·8	·2184	·5957	68 00	·2185	·5408	·5832	"
Knott Island, N. C. & Va. boundary.	36 33	75 56	1887·06	68 27·9	0·2193	0·5974	67 58	0·2194	0·5421	0·5848	"

NORTH DAKOTA.

Bismarck.	46 48	100 47	1890·58	74 53·3	0·1644	0·6305	74 42	0·1643	0·6005	0·6226	R. A. Marr.
Jamestown.	46 54	98 43	1896·42	75 27·9	·1594	·6351	75 23	·1594	·6112	·6317	R. L. Faris.
Dickinson.	46 54	102 44	1896·42	74 24·4	·1681	·6255	74 20	·1680	·5990	·6221	"
Williston.	48 09	103 38	1896·51	75 23·2	·1587	·6286	75 19	·1587	·6056	·6262	"
Rugby.	48 22	99 56	1896·52	76 04·6	·1519	·6311	76 00	·1519	·6093	·6279	"
Pembina.	48 58	97 14	1896·53	77 20·0	0·1396	0·6367	77 15	0·1396	0·6170	0·6326	"

OHIO.

Cincinnati, Longworth's garden.	39 06	84 27	1849·43	70 28·8	0·2087	0·6247	. .	. .	. .	. .	J. H. Lefroy.
Cincinnati, Mt. Lookout Observatory.	39 08	84 25	1888·58	70 18·7	0·2058	0·6110	69 59	0·2058	0·5648	0·6012	J. B. Baylor.

Collection of the most recent magnetic dips and intensities observed in the United States and referred to the epoch 1900·0—Continued.

OHIO—Continued.

Name of station.	Lat.	Long.	Date.	Dip θ.	Hor. force H.	Total force F.	θ_{1900}	H_{1900}	V_{1900}	F_{1900}	Observer.
	° ′	° ′		° ′			° ′				
Athens.	39 20	82 02	1880·92	70 58·7	0·2024	0·6210	70 21	0·2024	0·5668	0·6019	J. B. Baylor.
Mason.	39 22	84 13	1840·65	70 54·2	·2048	·6261	. .	. .	. .	. .	J. Locke.
Hamilton.	39 23	84 32	1840·63	70 58	·2051	·6289	. .	. .	. .	. .	"
Marietta.	39 25	81 28	1845·5	71 22·3	·2006	·6280	. .	. .	. .	. .	"
Lebanon.	39 26	84 06	1840·64	71 02·7	·2038	·6271	. .	. .	. .	. .	"
Oxford.	39 30	84 38	1845·5	71 10·0	·2033	·6298	. .	. .	. .	. .	"
Carrollton.	39 38	84 09	1840·5	71 10·0	·2027	·6280	. .	. .	. .	. .	"
Dayton.	39 45	84 09	1840·64	71 22·0	·2001	·6261	. .	. .	. .	. .	"
Springfield.	39 54	83 50	1838·24	71 27·4	·1996	·6275	. .	. .	. .	. .	"
Hebron.	39 59	82 29	1841·8	71 10·1	. .	. .	. .	. .	. .	. .	E. Loomis.
Columbus.	40 00	83 00	1891·51	70 42·5	·2010	·6082	70 26	·2010	·5655	·6002	J. B. Baylor.
Urbana.	40 03	83 42	1838·24	71 39·7	·2004	·6368	. .	. .	. .	. .	J. Locke.
Piqua.	40 06	84 13	1840·64	71 35·8	·1983	·6280	. .	. .	. .	. .	"
Frazeysburg.	40 09	82 08	1841·8	71 48·7	. .	. .	. .	. .	. .	. .	E. Loomis.
Tuscarawas.	40 24	81 50	1874·63	72 08·5	·1912	·6235	71 28	·1912	·5703	·6016	F. E. Hilgard and W. Diehl.
Steubenville.	40 25	80 39	1840·6	72 32·8	·1820	·6067	. .	. .	. .	. .	A. D. Bache.
Saint Mary.	40 32	84 19	1845·5	72 00·3	·1946	·6298	. .	. .	. .	. .	J. Locke.
Dover.	40 33	81 30	1841·8	72 19·2	. .	. .	. .	. .	. .	. .	E. Loomis.
Wellsville.	40 38	80 44	1844·48	72 35·3	·1872	·6257	. .	. .	. .	. .	J. Locke.
Forest.	40 50	83 28	1874·64	72 20·7	·1894	·6245	71 43	·1894	·5733	·6038	F. E. Hilgard and W. Diehl.
Fulton.	40 55	81 38	1841·8	72 38·9	. .	. .	. .	. .	. .	. .	E. Loomis.
Clinton.	40 58	81 40	1841·8	72 44·0	. .	. .	. .	. .	. .	. .	"
Tallmadge.	41 06	81 27	1841·6	72 53·4	. .	. .	. .	. .	. .	. .	"
Hudson, Western Reserve College.	41 15	81 26	1840·3	72 51·7	·1862	·6248	. .	. .	. .	. .	"
Windham.	41 15	81 03	1840·5	73 03·4	. .	. .	. .	. .	. .	. .	"
Shakersville.	41 15	81 13	1840·5	72 56·6	. .	. .	. .	. .	. .	. .	"
Streetsboro.	41 15	81 20	1840·5	72 53·0	. .	. .	. .	. .	. .	. .	"
Warren.	41 16	80 54	1844·48	72 55·9	·1847	·6293	. .	. .	. .	. .	J. Locke.
Hartford.	41 19	80 34	1840·5	72 59·8	. .	. .	. .	. .	. .	. .	E. Loomis.
Bazetta.	41 20	80 45	1840·5	72 59·7	. .	. .	. .	. .	. .	. .	"
Aurora.	41 20	81 20	1840·5	72 55·5	. .	. .	. .	. .	. .	. .	"
Twinsburg.	41 20	81 26	1840·5	72 51·3	. .	. .	. .	. .	. .	. .	"
Bedford.	41 24	81 32	1840·5	72 58·1	. .	. .	. .	. .	. .	. .	"
Huron.	41 26	82 27	1843·43	73 00·0	·1853	·6338	. .	. .	. .	. .	J. Locke.
Sandusky.	41 29	82 47	1839·4	72 57·8	. .	. .	. .	. .	. .	. .	E. Loomis.
Kinsman.	41 30	80 34	1840·5	73 08·1	. .	. .	. .	. .	. .	. .	"
Cleveland, City Hospital grounds.	41 30	81 42	1891·42	72 39	·183	·614					H. F. Reid.
Cleveland, Marine Hospital.	41 30	81 41	1888·55	72 49·9	·1832	·6206	72 27	0·1832	0·5793	0·6076	J. B. Baylor.
Maumee.	41 34	83 37	1839·4	72 49·1	. .	. .	. .	. .	. .	. .	E. Loomis.
Toledo.	41 41	83 32	1839·4	73 06·1	. .	. .	. .	. .	. .	. .	"
Ashtabula, close to lake.	41 52	80 52	1844·47	73 25·0	·1803	0·6317	. .	. .	. .	. .	J. Locke.
Ashtabula Landing.	41 54	80 47	1841·6	72 23·5	0·1770	. .	. .	. .	. .	. .	A. D. Bache.

OKLAHOMA.

No station.

OREGON.

Jacksonville.	42 18	122 58	1881·54	66 03·2	0·2315	0·5704	66 09	0·2273	0·5105	0·5589	J. S. Lawson.
Canyonville.	42 54	123 18	1881·55	65 57·9	. .	. .	65 54	. .	. .	. .	"
Oakland.	43 26	123 18	1881·55	66 59·4	. .	. .	66 56	. .	. .	. .	"
Eugene.	44 03	123 05	1881·57	67 51·0	·2211	·5865	67 47	·2170	·5314	·5740	"
Santiam River.	44 35	122 27	1830·6	68 28	·2143	·5837	. .	. .	. .	. .	D. Douglas.
Yaquina.	44 36	124 01	1888·36	68 00·3	·2156	·5758	67 57	·2136	·5274	·5690	R. A. Marr.
Albany.	44 39	123 02	1881·57	68 08·5	·2174	·5840	68 05	·2134	·5304	·5718	J. S. Lawson.
Salem.	44 56	122 58	1881·58	68 13·3	·2168	·5843	68 10	·2131	·5319	·5731	"
Multnomah River.	45 15	122 47	1830·6	68 57	·2081	·5796	. .	. .	. .	. .	D. Douglas.
Portland, City Park.	45 31	122 42	1895·18	68 48·7	·2165	·5990	68 48	·2158	·5563	·5966	J. J. Gilbert.
Portland, Custom-house.	45 31	122 41	1895·14	69 31·5	·2043	·5840	69 30	·2036	·5446	·5814	"
Dalles.	45 35	120 56	1860·39	69 41·8	0·2104	0·6063	69 30	0·2044	0·5468	0·5837	R. W. Haig.

Collection of the most recent magnetic dips and intensities observed in the United States and referred to the epoch 1900·0—Continued.

OREGON—Continued.

Name of station.	Lat.	Long.	Date.	Dip θ.	Hor. force H.	Total force F.	θ_{1900}	H_{1900}	V_{1900}	F_{1900}	Observer.
	° ′	° ′		° ′			° ′				
Three Mile Creek.	45 39	120 58	1881·78	. .	0·2062	. .	. .	0·2040	. .	. .	J. S. Lawson.
Blalock.	45 44	120 15	1881·77	. .	·2073	. .	. .	·2051	. .	. .	"
Saint Helen.	45 52	122 48	1881·62	70 54·1	·2006	0·6130	70 49	·1986	0·5708	0·6044	"
Umatilla.	45 57	119 20	1881·76	70 10·2	·2038	·6010	70 01	·2020	·5554	·5910	"
Rainier Station.	46 05	122 56	1886·50	. .	·1994	. .	. .	·1978	. .	. .	G. Davidson.
Point George.	46 11	123 40	1830·9	69 16·8	. .	. .	. .	. .	. .	. .	D. Douglas.
Astoria.	46 12	123 50	1881·61	69 13·4	0·2079	0·5860	69 08	0·2060	0·5404	0·5784	J. S. Lawson.

PENNSYLVANIA.

Near Mercersburg.	39 47	77 56	1840·6	71 47·3	0·1931	0·6179	. .	. .	. .	. .	A. D. Bache.
Chambersburg.	39 55	77 40	1842·27	71 57·1	·1935	·6248	. .	. .	. .	. .	J. Locke.
Phila., Navy-Yard.	39 56	75 07	1865·82	. .	·1913	. .					W. Harkness.
Philadelphia, Pa. Hospital grounds.	39 57	75 12	1895·70	71 03·4	·1950	·6007	70 47	0·1957	0·5614	0·5945	J. B. Baylor.
Philadelphia, Girard College.	39 58	75 10	1890·83	71 20·3	·1934	·6045					"
York.	39 58	76 44	1874·53	71 54·5	·1928	·6209	70 51	·1948	·5609	·5939	F. E. Hilgard & W. Diehl.
Yard.	39 58	75 23	1854·84	73 01·2	·1787	·6119	. .	. .	. .	. .	J. E. Hilgard.
Near Brownsville, Johnson's Tavern.	40 00	79 48	1862·58	71 57·0	·1920	·6197	70 50	·1920	·5523	·5848	C. A. Schott.
Bristol.	40 06	74 52	1842·36	72 25	·1866	·6169	. .	. .	. .	. .	J. Locke.
Greenfield.	40 06	79 52	1874·62	71 58·9	·1930	·6240	71 08	·1930	·5647	·5968	F. E. Hilgard & W. Diehl.
Bristol, Vanuxem.	40 07	74 53	1846·52	72 22·3	·1875	·6193	. .	. .	. .	. .	J. Locke.
Cumberland.	40 13	76 50	1844·5	71 36·0	·1971	·6243	. .	. .	. .	. .	"
Harrisburg, on Foster Island.	40 16	76 53	1895·72	71 43·0	·1908	·6083	71 25	·1912	·5687	·5999	J. B. Baylor.
Doylestown.	40 18	75 10	1841·6	72 23·1	·1931	·6381	. .	. .	. .	. .	A. D. Bache.
Reading.	40 19	75 55	1840·6	72 32·2	·1844	·6145	. .	. .	. .	. .	"
Duncan Island.	40 25	77 01	1840·6	72 35·0	·1827	·6104	. .	. .	. .	. .	"
Alleghany Summit.	40 27	78 10	1845·34	72 27·1	·1893	·6280	. .	. .	. .	. .	J. Locke.
Pittsburg.	40 28	80 00	1845·34	72 46·7	·1860	·6282	. .	. .	. .	. .	"
Allegheny, Observatory grounds.	40 28	80 01	1885·65	72 09·4	·1868	·6096	71 38	·1872	·5638	·5942	J. B. Baylor.
Armagh.	40 29	79 04	1840·6	72 18·7	·1862	·6128	. .	. .	. .	. .	A. D. Bache.
Huntingdon.	40 30	78 02	1840·5	72 17·8	·1895	·6232	. .	. .	. .	. .	"
Altoona.	40 31	78 25	1874·54	72 21·7	·1900	·6270	71 31	·1915	·5729	·6041	F. E. Hilgard & W. Diehl.
Lewistown.	40 36	77 36	1840·5	72 30·0	·1837	·6109	. .	. .	. .	. .	A. D. Bache.
Economy.	40 37	80 16	1840·6	72 35·0	·1848	·6174	. .	. .	. .	. .	"
Bethlehem, Lehigh University.	40 37	75 23	1874·47	73 38·9	·1770	·6289	72 35	·1796	·5725	·6001	T. C. Hilgard.
Easton.	40 42	75 15	1841·5	72 39·0	·1900	·6371	. .	. .	. .	. .	A. D. Bache.
Beaver.	40 44	80 19	1874·61	72 31·5	·1870	·6227	71 41	·1875	·5664	·5966	F. E. Hilgard & W. Diehl.
Bellefonte.	40 55	77 49	1841·6	72 42·3	·1876	·6310	. .	. .	. .	. .	A. D. Bache.
Curwensville.	40 57	78 36	1841·5	72 49·7	·1844	·6246	. .	. .	. .	. .	"
Bushkill.	41 07	75 00	1841·5	73 31·4	·1783	·6287	. .	. .	. .	. .	"
Mercer.	41 14	80 16	1841·5	72 57·2	·1844	·6290	. .	. .	. .	. .	"
Wilkesbarre.	41 14	75 58	1841·5	73 10·0	·1826	·6306	. .	. .	. .	. .	"
Williamsport.	41 15	77 03	1874·55	72 47·5	·1846	·6240	71 50	·1864	·5679	·5979	F. E. Hilgard & W. Diehl.
Berlin Tavern.	41 16	79 36	1841·6	72 52·8	·1856	·6305	. .	. .	. .	. .	A. D. Bache.
Sharpsville.	41 17	80 27	1874·59	72 50·7	·1845	·6255	72 00	·1850	·5694	·5987	F. E. Hilgard & W. Diehl.
Milford.	41 19	74 52	1841·6	73 47·6	·1738	·6227	. .	. .	. .	. .	A. D. Bache.
Silver Lake.	41 57	76 02	1841·64	. .	·1744	. .	. .	. .	. .	. .	"
Erie, Seventh street.	42 07	80 06	1862·60	73 52·3	·1731	·6231	72 37	0·1796	0·5738	0·6012	C. A. Schott.
Erie, Marine Hospital.	42 09	80 05	1885·70	73 24·3	0·1762	0·6170					J. B. Baylor.

Collection of the most recent magnetic dips and intensities observed in the United States and referred to the epoch 1900·0—Continued.

RHODE ISLAND.

Name of station.	Lat.	Long.	Date.	Dip θ.	Hor. force H.	Total force F.	θ_{1900}	H_{1900}	V_{1900}	F_{1900}	Observer.
	° ′	° ′		° ′			° ′				
Point Judith.	41 22	71 29	1847·70	73 45·1	0·1746	0·6242	. .	. .	. .	. .	R. H. Fauntleroy.
Newport.	41 29	71 19	1835·5	. .	·1741	. .	. .	. .	. .	. .	A. D. Bache & E. H. Courtenay.
Coasters Harbor Island.	41 30	71 20	1896·46	72 42·3	·1785	·6004	72 32	0·1795	0·5706	0·5981	G. R. Putnam.
McSparran.	41 30	71 27	1844·55	73 47·6	. .	. .	. .	. .	. .	. .	A. D. Bache & T. J. Lee.
Spencer.	41 41	71 30	1844·6	75 07·1	. .	. .	. .	. .	. .	. .	T. J. Lee.
Providence, station near Brown University.	41 50	71 24	1895·64	72 51·6	0·1776	0·6027	72 31	0·1862	0·5908	0·6195	J. B. Baylor.
Beaconpole.	42 00	71 27	1844·88	74 21·9	. .	. .	. .	. .	. .	. .	T. J. Lee.

SOUTH CAROLINA.

Graham, Hilton Head.	32 13	80 46	1870·31	63 28·1	0·2604	0·5831	62 51	0·2559	0·4990	0·5608	C. O. Boutelle.
Port Royal.	32 18	80 38	1859·08	64 07·5	. .	. .	. .	. .	. .	. .	"
Beaufort.	32 26	80 40	1875·27	. .	·2576	. .	. .	·2538	. .	. .	"
Edisto East Base.	32 33	80 13	1850·26	64 04·1	·2593	·5929	. .	. .	. .	. .	G. Davidson.
Charleston Harbor, Breach Inlet.	32 46	79 49	1895·42	63 59·0	·2519	·5742	63 56	·2511	·5132	·5714	J. B. Baylor.
Charleston.	32 47	79 56	1833·1	. .	·2730	. .	. .	. .	. .	. .	J. N. Nicollet.
Allston.	33 22	79 17	1853·99	65 29·5	·2508	·6046	. .	. .	. .	. .	C. O. Boutelle.
Aiken, near Court-House.	33 31	81 43	1885·97	65 01·8	·2445	·5792	64 41	·2431	·5139	·5685	J. B. Baylor.
Columbia, Capitol Square.	34 00	81 02	1854·15	66 07·7	·2442	·6034	. .	. .	. .	. .	G. W. Dean.
Marion.	34 09	79 20	1891·35	65 48·0	·2357	·5751	65 33	·2351	·5170	·5679	J. B. Baylor.
Florence.	34 09	79 43	1891·35	65 52·6	0·2357	0·5767	65 38	0·2351	0·5190	0·5698	"

SOUTH DAKOTA.

Yankton.	42 53	97 25	1896·38	72 45·4	0·1834	0·6187	72 41	0·1831	0·5872	0·6152	R. L. Faris.
Mitchell.	43 42	98 01	1896·38	73 02·8	·1830	·6275	72 59	·1827	·5969	·6243	"
Pierre.	44 22	100 22	1896·39	72 50·1	·1843	·6244	72 46	·1840	·5932	·6210	"
Aberdeen.	45 28	98 29	1896·41	74 09·1	0·1728	0·6327	74 05	0·1726	0·6052	0·6294	"
											"

TENNESSEE.

Chattanooga.	35 01	85 18	1890·43	65 54·0	0·2419	0·5924	65 42	0·2407	0·5331	0·5849	J. B. Baylor.
Grand Junction.	35 05	89 13	1881·69	66 00·4	·2429	·5973	65 42	·2398	·5310	·5826	"
Memphis, Marine Hospital.	35 08	90 03	1890·38	65 14·4	·2451	·5853	65 05	·2437	·5247	·5785	"
Pulaski.	35 13	87 03	1881·64	66 06·4	·2421	·5978	65 45	·2399	·5325	·5841	"
Tullahoma.	35 22	86 13	1881·59	66 25·5	·2405	·6012	66 02	·2383	·5360	·5867	"
Athens.	35 27	84 37	1881·54	66 11·7	·2439	·6043	65 44	·2420	·5368	·5889	"
Columbia.	35 37	87 04	1881·63	67 07·5	·2370	·6097	66 45	·2348	·5465	·5949	"
Jackson.	35 39	88 51	1881·71	66 05·4	·2431	·5998	65 45	·2407	·5343	·5861	"
Murfreesboro.	35 53	86 25	1881·61	66 53·3	·2386	·6079	66 29	·2364	·5431	·5924	"
Knoxville, grounds of University.	35 58	83 55	1890·44	66 59·7	·2356	·6028	66 45	·2347	·5463	·5946	"
Rutherford.	36 09	89 01	1881·72	67 13·8	·2360	·6097	66 54	·2336	·5477	·5954	"
Nashville, grounds of Vanderbilt Univ'y.	36 09	86 48	1888·60	67 03·9	·2312	·5932	66 48	·2302	·5370	·5844	"
Lebanon, North Base.	36 13	86 18	1896·1	66 44·3	·2357	·5968	66 38	·2353	·5446	·5932	A. H. Buchanan.
Edgefield.	36 15	86 46	1871·92	67 10·7	?·2065	. .	. .	. .	. .	. .	T. C. Hilgard.
Caryville.	36 19	84 14	1881·53	67 55·7	·2292	·6101	67 28	·2271	·5474	·5927	J. B. Baylor.
Rogersville.	36 25	83 03	1873·63	68 26·2	·2297	·6250	67 47	·2267	·5552	·5997	F. E. Hilgard & J. M. Poole.
Bristol.	36 36	82 11	1890·45	67 48·5	0·2236	0·5921	67 29	0·2230	0·5379	0·5824	J. B. Baylor.

Collection of the most recent magnetic dips and intensities observed in the United States and referred to the epoch 1900·0—Continued.

TEXAS.

Name of station.	Lat.	Long.	Date.	Dip θ.	Hor. force H.	Total force F.	θ_{1900}	H_{1900}	V_{1900}	F_{1900}	Observer.
	° ′	° ′		° ′			° ′				
Rio Grande, mouth.	25 57	97 08	1853·9	52 23·6	. .	. .	. .	. .	. .	. .	W. H. Emory.
Ringgold Barracks.	26 23	98 43	1853·9	52 27	. .	. .	. .	. .	. .	. .	"
Peña.	27 19	98 39	1890·08	55 03·3	0·3020	0·5273	55 10	0·2978	0·4280	0·5213	J. B. Baylor.
Fort McIntosh.	27 31	99 31	1895·33	55 10·7	·3005	·5262	55 14	·2985	·4299	·5235	E. Smith.
San Diego.	27 45	98 11	1890·07	55 37·3	·3004	·5320	55 44	·2964	·4351	·5265	J. B. Baylor.
Corpus Christi.	27 48	97 23	1890·04	55 53·4	·2983	·5319	55 58	·2943	·4358	·5259	"
Beeville.	28 23	97 41	1890·06	56 44·8	·2938	·5358	56 50	·2898	·4434	·5298	"
Cotulla.	28 27	99 10	1890·11	55 55·0	·2979	·5317	56 00	·2937	·4354	·5252	"
Port Lavaca.	28 37	96 37	1890·16	57 01·3	·2941	·5403	57 04	·2905	·4484	·5343	"
Eagle Pass, Ft. Duncan.	28 44	100 30	1890·12	56 15·4	·2962	·5333	56 20	·2920	·4384	·5267	"
Jupiter.	28 55	95 21	1853·36	57 11·4	·3041	·5614	. .	. .	. .	. .	G. W. Dean.
Columbia.	29 10	95 35	1890·27	57 54·7	·2903	·5464	57 56	·2871	·4582	·5408	J. B. Baylor.
Spofford Junction.	29 11	100 25	1890·14	56 59·6	·2936	·5389	57 04	·2896	·4471	·5327	"
Galveston, E. Base.	29 13	94 56	1853·21	57 42·1	·3008	·5630	. .	. .	. .	. .	G. W. Dean.
Galveston.	29 18	94 47	1895·43	58 06·3	·2885	·5461	58 07	·2876	·4624	·5445	E. Smith.
Wharton.	29 18	96 04	1890·19	57 53·2	·2887	·5431	57 55	·2854	·4553	·5374	J. B. Baylor.
Dollar Point.	29 26	94 53	1878·42	58 21·5	·2938	·5602	58 24	·2862	·4653	·5463	"
San Antonio magnetic observatory.	29 27	98 28	1892·3	57 40·2	·2918	·5457	57 42	·2889	·4570	·5406	R. E. Halter & L. G. Shultz.
San Antonio, Hillside Ranch mag. obsy.	29 29	98 32	1895·1	57 45·4	·2914	·5463	57 47	·2896	·4596	·5433	"
Houston.	29 42	95 20	1890·26	58 39·9	·2860	·5499	58 41	·2830	·4652	·5445	J. B. Baylor.
Sabine Pass, Everett's House.	29 44	93 52	1840·1	58 32·9	. .	. .	. .	. .	. .	. .	J. D. Graham.
Langtry.	29 48	101 35	1890·13	57 22·2	·2921	·5417	57 26	·2881	·4510	·5352	J. B. Baylor.
La Grange.	29 53	96 48	1890·23	58 23·8	·2868	·5473	58 25	·2838	·4616	·5419	"
Orange.	30 03	93 43	1890·29	59 25·0	·2822	·5547	59 25	·2795	·4733	·5498	"
Liberty.	30 04	94 50	1890·28	59 14·6	·2822	·5517	59 15	·2795	·4698	·5466	"
Beaumont.	30 05	94 05	1890·29	59 20·6	·2823	·5536	59 21	·2796	·4718	·5484	"
Sanderson.	30 09	102 26	1890·13	57 22·7	·2909	·5396	57 27	·2869	·4495	·5332	"
Austin, grounds of University.	30 17	97 44	1895·38	58 58·8	·2833	·5497	58 59	·2816	·4683	·5465	E. Smith.
Mouth of canyon.	31 02	105 37	1852	57 38	·2784	·5201	. .	. .	. .	. .	W. H. Emory.
Sierra Blanca.	31 10	105 35	1888·93	58 17·3	·2838	·5400	58 19	·2790	·4521	·5313	J. B. Baylor.
Pecos City.	31 26	103 20	1888·94	58 44·0	·2809	·5413	58 45	·2765	·4556	·5330	"
San Elizario.	31 35	106 16	1852	58 57	. .	. .	. .	. .	. .	. .	W. H. Emory.
El Paso, City Park.	31 46	106 29	1895·29	59 03·0	·2801	·5446	59 03	·2781	·4638	·5408	E. Smith.
Boundary station about 3 miles N. W. of El Paso.	31 47	106 31	1892·33	58 57·0	·2799	·5427	58 57	·2766	·4594	·5362	O. B. French.
Frontera.	31 49	106 33	1852	59 05	. .	. .	. .	. .	. .	. .	W. H. Emory.
Colorado.	32 22	100 55	1888·95	60 56·2	·2710	·5578	60 56	·2677	·4816	·5509	J. B. Baylor.
Cisco.	32 23	98 50	1888·95	60 55·5	·2729	·5617	60 57	·2696	·4853	·5553	"
Longview.	32 29	94 34	1872·29	61 57·6	·2670	·5680	. .	. .	. .	. .	T. C. Hilgard.
Mineola.	32 40	95 20	1888·97	61 42·7	·2685	·5665	61 40	·2655	·4924	·5595	J. B. Baylor.
Fort Worth.	32 45	97 20	1888·96	61 40·3	0·2692	0·5673	61 39	0·2662	0·4934	0·5605	"

UTAH.

Mt. Ellen.	38 07	110 49	1891·63	66 45·0	0·2342	0·5933	66 42	0·2317	0·5380	0·5857	P. A. Welker.
Beaver.	38 16	112 38	1885·73	64 20·7	·2450	·5658	64 15	·2407	·4990	·5541	G. F. Bird.
Tamarac.	38 24	112 24	1885·62	64 40·4	·2458	·5746	64 35	·2415	·5082	·5626	G. F. Bird & G. Lange.
Tushar.	38 25	112 24	1885·68	64 55·4	·2440	·5755	64 50	·2397	·5102	·5638	"
Milford.	38 25	113 00	1885·75	64 38·3	·2445	·5708	64 33	·2402	·5048	·5590	G. F. Bird.
Mount Waas.	38 32	109 14	1893·58	65 57·4	·2450	·6013	65 55	·2434	·5445	·5965	R. L. Faris.
Wasatch.	39 07	111 27	1890·65	65 49·3	·2345	·5725	65 45	·2323	·5156	·5656	P. A. Welker.
Deseret, R. R. station.	39 18	112 38	1884·73	65 34·8	·2406	·5819	65 29	·2370	·5196	·5711	W. Eimbeck & G. F. Bird.
Scipio.	39 24	112 12	1884·67	65 38·8	·2387	·5790	65 33	·2351	·5170	·5679	"
Patmos Head.	39 30	110 19	1890·81	66 13·2	·2348	·5823	66 08	·2326	·5258	·5750	P. A. Welker.
Sulphur.	39 41	113 46	1859	65 07	. .	. .	. .	. .	. .	. .	J. H. Simpson.
Nephi.	39 42	111 51	1883·85	66 26·2	·2353	·5887	66 18	·2315	·5274	·5758	W. Eimbeck & G. F. Bird.
"	"	"	1884·58	66 04·6	. .	. .	65 57	. .	. .	. .	"
Mount Nebo.	39 48	111 46	1887·57	66 16·0	0·2336	0·5804	66 10	0·2303	0·5213	0·5699	W. Eimbeck & J. H. Turner.

Collection of the most recent magnetic dips and intensities observed in the United States and referred to the epoch 1900·0—Continued.

UTAH—Continued.

Name of station.	Lat.	Long.	Date.	Dip θ.	Hor. force H.	Total force F.	θ_{1900}	H_{1900}	V_{1900}	F_{1900}	Observer.
	° ′	° ′		° ′			° ′				
Simpson's Spring.	40 02	112 47	1859	66 54	. .	. .	. .	. .	. .	. .	J. H. Simpson.
Camp Floyd.	40 13	112 08	1859	66 29	. .	. .	. .	. .	. .	. .	"
Provo City.	40 15	111 40	1884·75	66 36·4	. .	. .	66 31	0·2301	0·5295	0·5774	W. Eimbeck & G. F. Bird.
"	"	"	1883·86	66 41·0	·2339	·5911					
Deseret or Mt. Guyot.	40 27	112 37	1892·68	66 45·0	·2297	·5819	66 41	·2280	·5289	·5760	P. A. Welker.
Lake Shore.	40 40	112 26	1887·79	66 59·6	·2309	·5901	66 54	·2281	·5347	·5813	W. Eimbeck & J. H. Turner.
Salt Lake City, Temple Block.	40 46	111 54	1887·86	67 03·4	·2303	·5906	66 57	·2275	·5347	·5810	"
Salt Lake City, Univ'y.	40 46	111 54	1893·43	67 05·2	·2291	·5884	67 02	·2280	·5379	·5835	R. L. Faris.
Waddoup.	40 54	111 53	1892·43	67 15·8	·2269	·5871	67 12	·2253	·5360	·5814	"
Schneider's Creek.	40 56	111 42	1858·9	67 10	. .	. .	. .	. .	. .	. .	J. H. Simpson.
Antelope.	40 58	112 13	1892·75	67 40·8	·2247	·5917	67 37	·2231	·5418	·5859	R. L. Faris.
Ogden Peak.	41 12	111 53	1888·71	67 53·0	·2312	·6141	67 47	·2286	·5598	·6047	J. H. Turner.
Ogden Observatory.	41 13	112 00	1886·71	67 23·2	·2264	·5888	67 17	·2234	·5336	·5785	R. A. Marr.
Promontory.	41 18	112 25	1892·55	67 39·5	·2234	·5877	67 36	·2218	·5382	·5821	P. A. Welker.
Corinne.	41 33	112 06	1881·34	67 47·8	·2242	·5934	67 38	·2200	·5346	·5781	W. Eimbeck & R. A. Marr.
Kelton.	41 45	113 07	1881·34	67 49·7	0·2243	0·5944	67 40	0·2201	0·5358	0·5792	"

VERMONT.

Bellows Falls.	43 09	72 28	1876·58	74 29·7	0·1675	0·6266	73 25	0·1726	0·5796	0·6046	F. E. Hilgard.
Rutland.	43 36	72 55	1890·75	74 21·5	·1638	·6076	74 09	·1654	·5825	·6056	J. B. Baylor.
White River junction.	43 40	72 18	1876·59	75 07·8	·1609	·6270	74 03	·1660	·5808	·6041	F. E. Hilgard.
Wells River.	44 09	72 05	1876·60	75 31·0	·1585	·6338	74 26	·1636	·5872	·6097	"
Montpelier.	44 17	72 36	1845·48	75 16·2	·1581	·6218	. .	. .	. .	. .	J. Locke.
Burlington, University station.	44 28	73 12	1890·74	74 53·5	·1604	·6154	74 49	·1608	·5926	·6141	J. B. Baylor.
Canaan Corner.	45 00	71 31	1845	76 23·5	. .	. .	. .	. .	. .	. .	J. D. Graham.
Lake Memphremagog.	45 00	72 13	1845	76 08·4	. .	. .	. .	. .	. .	. .	"
Derby.	45 00	72 12	1876·61	75 51·0	0·1530	0·6259	74 46	0·1584	0·5817	0·6030	F. E. Hilgard.

VIRGINIA.

Hines, Va. and N. C. boundary.	36 33	76 33	1887·11	68 32·8	0·2186	0·5976	68 03	0·2186	0·5424	0·5848	C. H. Sinclair.
Dismal Swamp, boundary stone.	36 33	76 23	1886·94	68 22·2	·2192	·5946	67 52	·2192	·5389	·5817	"
Knott Isd., north end.	36 34	75 55	1873·30	68 52·5	·2195	·6089	67 59	·2195	·5428	·5855	A. T. Mosman.
Danville.	36 37	79 20	1873·56	68 54·8	·2180	·6059	68 08	·2178	·5428	·5848	F. E. Hilgard & J. M. Poole.
Marion College.	36 48	81 31	1881·50	68 25·7	·2234	·6077	67 52	·2232	·5488	·5924	J. B. Baylor.
Buffalo.	36 48	80 29	1895·74	68 07·3	·2201	·5906	67 58	·2199	·5434	·5861	A. H. Buchanan.
Gosport Navy-Yard.	36 49	76 17	1865·83	69 38	·2173	·6244	. .	. .	. .	. .	W. Harkness.
Norfolk, near City Hall, mean of 2 stations.	36 51	76 17	1856·69	69 29·0	·2150	·6133	. .	. .	. .	. .	C. A. Schott.
Mount Airy.	36 52	79 06	1873·64	68 54·7	·2210	·6142	68 02	·2208	·5474	·5903	F. E. Hilgard & J. M. Poole.
Wytheville.	36 55	81 05	1881·48	68 43·6	·2204	·6074	68 08	·2196	·5471	·5895	J. B. Baylor.
Cape Henry L. H.	36 56	76 00	1895·45	68 48·7	·2139	·5918	68 43	·2140	·5493	·5895	"
Old Point Comfort L. H.	37 00	76 18	1856·69	69 31·6	·2148	·6142	. .	. .	. .	. .	C. A. Schott.
Cape Charles.	37 07	75 58	1856·68	69 43·3	·2131	·6151	. .	. .	. .	. .	"
Christiansburg.	37 11	80 18	1873·64	69 01·1	·2175	·6074	68 14	·2163	·5417	·5833	F. E. Hilgard & J. M. Poole.
Burkeville.	37 13	78 12	1873·56	69 20·4	·2125	·6023	68 28	·2120	·5373	·5776	"
Petersburg, Roslyn.	37 14	77 24	1852·61	69 17·3	·2139	·6049	. .	. .	. .	. .	G. W. Dean.
Williamsburg, W. and M. College.	37 16	76 43	1887·28	68 56·5	·2111	·5874	68 27	·2112	·5348	·5750	J. B. Baylor.
Scott.	37 20	75 54	1856·68	70 01·5	·2108	·6169	. .	. .	. .	. .	C. A. Schott.
Wolftrap.	37 24	76 15	1871·37	69 46·8	·2122	·6137	68 44	·2122	·5451	·5849	A. T. Mosman.
Lynchburg.	37 25	79 09	1890·46	68 57·6	·2136	·5951	68 38	·2136	·5460	·5863	J. B. Baylor.
Richmond, Fair Gr'nds.	37 34	77 27	1891·99	69 08·8	0·2115	0·5942	68 50	0·2115	0·5463	0·5857	"

Collection of the most recent magnetic dips and intensities observed in the United States and referred to the epoch 1900·0—Continued.

VIRGINIA—Continued.

Name of station.	Lat.	Long.	Date.	Dip θ.	Hor. force H.	Total force F.	θ_{1900}	H_{1900}	V_{1900}	F_{1900}	Observer.
	° ′	° ′		° ′			° ′				
Natural Bridge.	37 35	79 22	1873·65	69 42·9	0·2122	0·6121	68 53	0·2122	0·5495	0·5891	F. E. Hilgard & J. M. Poole.
Joynes.	37 42	75 37	1856·68	70 21·2	·2069	·6155	. .	. .	. .	. .	C. A. Schott.
Tangier.	37 48	75 59	1871·46	70 11·6	·2090	·6167	69 09	·2090	·5487	·5871	A. T. Mosman.
Covington.	37 48	80 00	1881·45	69 33·5	·2128	·6093	68 53	·2128	·5511	·5908	J. B. Baylor.
Snead.	37 58	75 26	1856·67	70 31·0	·2051	·6151	. .	. .	. .	. .	C. A. Schott.
Charlottesville.	38 02	78 29	1887·26	69 45	·2079	·6007	69 16	·2079	·5493	·5872	C. H. Sinclair.
Staunton.	38 09	79 04	1873·66	69 54·1	·2070	·6024	69 02	·2070	·5403	·5785	F. E. Hilgard & J. M. Poole.
Fredericksburg.	38 18	77 27	1856·71	70 37·9	·2051	·6188	. .	. .	. .	. .	C. A. Schott.
Clark Mountain.	38 19	78 00	1871·66	71 40·2	·2024	. .	. .	·2024	. .	. .	C. O. Boutelle.
Harrisonburg.	38 25	78 52	1873·67	70 28·9	·2046	·6124	69 36	·2046	·5502	·5870	F. E. Hilgard & J. M. Poole.
Culpeper.	38 28	78 00	1873·53	70 42·0	·2071	·6266	69 49	·2071	·5634	·6003	"
Woodville.	38 35	78 06	1892·03	70 11·6	·2152	·6351	69 53	·2152	·5875	·6256	J. H. Turner.
Mount Vernon.	38 42	77 05	1844·28	70 55·5	·2029	·6211	. .	. .	. .	. .	J. Locke.
Bull Run.	38 53	77 42	1871·82	71 18·9	·1998	·6237	70 22	·2000	·5605	·5953	C. O. Boutelle.
Peach Grove.	38 55	77 14	1869·86	71 05·0	·2000	·6169	. .	·2000	. .	. .	"
Strasburg.	39 00	78 22	1873·53	70 56·2	0·2017	0·6176	70 03	0·2017	0·5557	0·5912	F. E. Hilgard & J. M. Poole.

WASHINGTON.

Vancouver.	45 37	122 40	1895·17	69 17·0	0·2091	0·5911	69 16	0·2085	0·5508	0·5890	J. J. Gilbert.
Lower Cascades.	45 39	122 00	1881·81	. .	·2073	. .	. .	·2050	. .	. .	J. S. Lawson.
Lower Cascades, rapids of Colorado River.	45 40	121 50	1830	69 27	·2048	·5837	. .	. .	. .	. .	D. Douglas.
Dalles.	45 40	120 49	1860·42	70 04·5	·2043	·5995	. .	. .	. .	. .	R. W. Haig.
Near Old Fort Wallawalla.	46 03	118 50	1830·5	70 14	·2005	·5934	. .	. .	. .	. .	D. Douglas.
Wallawalla.	46 04	118 21	1887·72	70 41·2	·1984	·5998	70 35	·1969	·5586	·5922	E. Smith.
Wallula, north of Old Fort Wallawalla.	46 07	118 55	1881·75	70 24·9	·2025	·6039	70 16	·2003	·5585	·5932	J. S. Lawson.
Dry Creek.	46 09	118 18	1861	70 49	·1978	·6020	. .	. .	. .	. .	J. S. Harris.
Ainsworth.	46 14	119 03	1881·64	70 37·8	·1997	·6023	70 30	·1975	·5577	·5916	J. S. Lawson.
Cape Disappointment, beach station.	46 17	124 03	1895·15	69 16·5	·2064	·5833	69 16	·2059	·5440	·5817	J. J. Gilbert.
Pomeroy.	46 31	117 40	1881·72	70 20·2	·2032	·6037	70 11	·2010	·5578	·5929	J. S. Lawson.
Tukannon River.	46 32	118 00	1861	70 23	·2020	·6017	. .	. .	. .	. .	J. S. Harris.
Sixty Mile Well.	46 49	118 50	1881·65	70 44·8	·1992	·6042	70 36	·1970	·5595	·5932	J. S. Lawson.
Cow Creek.	46 53	118 10	1861	71 57 ?	·1984	. .	. .	. .	. .	. .	J. S. Harris.
Olympia, Howard.	47 03	122 53	1894·95	70 26·4	·1976	·5902	70 25	·1971	·5540	·5880	J. J. Gilbert.
Nisqually.	47 07	122 38	1859·08	70 40·0	·2002	·6048	. .	. .	. .	. .	R. W. Haig.
Lugenbeel Creek.	47 09	118 06	1861	71 20	·1950	·6093	. .	. .	. .	. .	J. S. Harris.
Tacoma.	47 16	122 27	1895·12	70 42·6	·1958	·5927	70 41	·1954	·5574	·5908	J. J. Gilbert.
Sprague.	47 19	118 10	1881·65	71 05·8	·1982	·6119	70 57	·1964	·5687	·6017	J. S. Lawson.
Seattle.	47 36	122 20	1895·12	70 50·3	·1932	·5886	70 49	·1928	·5541	·5867	J. J. Gilbert.
Spokane Falls.	47 40	117 26	1881·66	72 13·3	·1923	·6298	72 04	·1905	·5887	·6187	J. S. Lawson.
Peon's Prairie.	47 44	117 14	1861	72 07	·1890	·6155	. .	. .	. .	. .	J. S. Harris.
Spokane Ferry.	47 49	117 49	1861	71 53	·1906	·6130	. .	. .	. .	. .	"
Chemikane.	48 00	117 45	1861·38	72 04·2	·1894	·6152	. .	. .	. .	. .	R. W. Haig.
Port Discovery.	48 02	122 50	1792·4	74 30	. .	. .	. .	. .	. .	. .	G. Vancouver.
Okinakane.	48 05	119 27	1833·3	71 45	·1860	·5939	. .	. .	. .	. .	D. Douglas.
Port Townsend, Marine Hospital grounds.	48 07	122 45	1894·89	71 14·8	·1847	·5745	71 14	·1844	·5428	·5732	J. J. Gilbert.
Neeah Bay, near Waadah Island.	48 23	124 38	1881·78	71 04·4	·1911	·5893	71 01	·1897	·5514	·5832	H. E. Nichols.
Colville Depot.	48 34	117 52	1861	72 31	·1833	·6101	. .	. .	. .	. .	J. S. Harris.
Shaw Island, San Juan.	48 35	122 58	1895·66	71 27·5	·1894	·5956	71 26	0·1892	0·5633	0·5942	F. A. Young.
Fort Colville.	48 40	118 05	1861·27	72 41·9	·1841	·6177	. .	. .	. .	. .	R. W. Haig.
Birch Bay.	48 53	122 45	1792	73 13	. .	. .	. .	. .	. .	. .	G. Vancouver.
Point Roberts.	48 59	123 01	1858·2	71 42·6	·1896	·6042	. .	. .	. .	. .	J. S. Harris.
Semiahmoo.	48 59	122 46	1858	72 15	. .	. .	. .	. .	. .	. .	G. H. Richards.
Skagit.	49 00	121 03	1860	72 39	0·1813	0·6080	. .	. .	. .	. .	J. S. Harris.
Camp Osogous.	49 00	119 24	1861	72 35	. .	. .	. .	. .	. .	. .	"

Collection of the most recent magnetic dips and intensities observed in the United States and referred to the epoch 1900·0—Continued.

WEST VIRGINIA.

Name of station.	Lat.	Long.	Date.	Dip θ.	Hor. force H.	Total force F.	θ_{1900}	H_{1900}	V_{1900}	F_{1900}	Observer.
	° ′	° ′		° ′			° ′				
Alderson.	37 45	80 40	1881·44	69 25·9	0·2157	0·6141	68 50	0·2150	0·5553	0·5954	J. B. Baylor.
Charleston.	38 21	81 38	1881·43	69 57·2	·2110	·6157	69 21	·2104	·5582	·5966	"
Parkersburg.	39 16	81 34	1881·42	70 58·6	·2030	·6227	70 22	·2026	·5678	·6030	"
Clarksburg.	39 17	80 20	1880·94	70 44·8	·2035	·6171	70 07	·2032	·5618	·5974	"
Martinsburg.	39 27	77 57	1873·52	71 25·1	·1951	·6123	70 27	·1950	·5490	·5826	F. E. Hilgard & J. M. Poole.
Wheeling, south end of Zane Island.	40 03	80 44	1881·40	71 54·5	0·1940	0·6248	71 17	·01940	0·5725	0·6046	J. B. Baylor.

WISCONSIN.

Platteville.	42 43	90 14	1841·7	73 17·4	. .	. .	. .	. .	. .	. .	E. Loomis.
Mineral Point.	42 50	89 54	1839·84	73 20·6	0·1823	0·6358	. .	. .	. .	. .	J. Locke.
"	42 50	89 54	1841·7	73 23·2	. .	. .	. .	. .	. .	. .	E. Loomis.
Hickok.	42 58	90 00	1841·7	73 39·5	. .	. .	. .	. .	. .	. .	"
Blue Mounds.	43 01	89 51	1841·7	73 34·9	. .	. .	. .	. .	. .	. .	"
"	43 01	89 51	1839·82	73 41	·1792	·6381	. .	. .	. .	. .	J. Locke.
Campbell.	43 01	89 40	1841·7	73 28·1	. .	. .	. .	. .	. .	. .	E. Loomis.
Prairie du Chien.	43 03	91 06	1839·81	73 16·6	·1839	·6395	. .	. .	. .	. .	J. Locke.
Milwaukee.	43 04	87 53	1888·65	73 48·0	·1765	·6327	73 29	0·1763	0·5944	0·6200	J. B. Baylor.
Madison, Farm Station.	43 04	89 25	1888·66	73 34·4	·1786	·6316	73 16	·1783	·5929	·6192	"
Madison, Magnetic Observatory, University.	43 04	89 24	1880·71	73 49·5	·1798	·6455	73 19	·1791	·5976	·6239	D. Mason.
La Crosse.	43 49	91 15	1877·73	73 48·7	·1789	·6417	73 15	·1781	·5918	·6180	A. Braid.
Green Bay.	44 30	87 59	1891·60	74 47·6	·1654	·6306	74 34	·1654	·5991	·6214	J. B. Baylor.
Prentice.	45 32	90 28	1891·61	75 03·8	·1607	·6235	74 50	·1607	·5928	·6142	"
Superior City.	46 40	92 04	1880·64	76 26·1	·1504	·6410	75 55	0·1504	0·5994	0·6180	"
La Pointe.	46 47	90 58	1843·55	76 56	0·1478	0·6538	. .	. .	. .	. .	J. Locke.

WYOMING.

Sherman.	41 08	105 24	1872·60	68 53·3	0·2193	0·6091	68 40	0·2138	0·5474	0·5878	W. Suess.
Cheyenne, mean of 2 stations.	41 08	104 49	1878·66	68 58·2	·2184	·6086	68 45	·2147	·5521	·5924	T. E. Thorpe & J. B. Baylor.
Fort Bridger.	41 20	110 24	1858·9	68 05	. .	. .	. .	. .	. .	. .	J. H. Simpson.
Green River, mean of 2 stations.	41 32	109 29	1878·70	68 18·8	·2218	·6002	68 08	·2168	·5403	·5821	T. E. Thorpe & J. B. Baylor.
Fort Steele.	41 47	106 57	1878·74	69 00·2	·2170	·6059	68 47	·2130	·5487	·5886	J. B. Baylor.
Fort Laramie.	42 12	104 31	1858·7	70 03	. .	. .	. .	. .	. .	. .	J. H. Simpson.
Little Sandy Creek.	42 15	109 40	1858·8	69 00	. .	. .	. .	. .	. .	. .	"
Sweetwater River.	42 30	108 35	1858·8	69 35	. .	. .	. .	. .	. .	. .	"
La Bonté River.	42 35	105 22	1858·8	70 15	. .	. .	. .	. .	. .	. .	"
Sweetwater River.	42 38	107 25	1858·8	69 53	. .	. .	. .	. .	. .	. .	"
Greasewood Creek.	42 40	107 07	1858·8	70 01	. .	. .	. .	. .	. .	. .	"
West of Deer Creek.	42 53	105 57	1858·8	70 29	. .	. .	. .	. .	. .	. .	"
Yellowstone Lake near outlet.	44 33	110 24	1892·46	72 17·4	·1855	·6098	72 12	·1848	·5756	·6045	G. R. Putnam.
Mile Post 42.	45 00	110 12	1882·62	71 17·5	·1984	·6186	71 05	·1963	·5728	·6055	B. A. Colonna.
Northeast Corner of Wyoming.	45 00	104 03	1882·43	72 41·0	·1889	·6345	72 24	·1871	·5898	·6189	"
Little Missouri Riv. Sta.	45 00	104 25	1882·47	72 43·7	·1901	·6404	72 27	·1883	·5954	·6245	"
Mile Posts 283, 284.	45 00	105 20	1882·51	72 14·0	·1940	·6357	71 58	·1920	·5898	·6202	"
Mile Post 185.	45 00	107 21	1882·53	72 10·4	0·1936	0·6322	71 54	0·1916	0·5861	0·6168	"

WEST INDIA ISLANDS.

Barbados, Bridgetown.	13 04	59 36	1890·34	43 08·2	0·3023	0·4143	. .	. .	. .	. .	E. D. Preston.
Antigua, Fort in English Harbor.	17 03	61 50	1835·33	48 46·2	·3181	·4648	. .	. .	. .	. .	E. Home.
Antigua.	17 08	61 52	1848	49 11	. .	. .	. .	. .	. .	. .	E. Barnett.
Alta Vela.	17 28	71 39	1835·10	47 39	0·2988	0·4339	. .	. .	. .	. .	E. Home.

Collection of the most recent magnetic dips and intensities observed in the United States and referred to the epoch 1900·0—Continued.

WEST INDIA ISLANDS—Continued.

Name of station.	Lat.	Long.	Date.	Dip θ.	Hor. force H.	Total force F.	θ_{1900}	H_{1900}	V_{1900}	F_{1900}	Observer.
	° ′	° ′		° ′			° ′				
Kingston.	17 56	76 51	1857·16	46 32	0·3310	0·4812	. .	. .	. .	. .	K. Friesach.
Anguilla Island.	18 14	63 05	1846	50 15	. .	. .	. .	. .	. .	. .	E. Barnett.
Saint Thomas.	18 20	64 55	1865·87	49 38	·3116	·4811	. .	. .	. .	. .	W. Harkness.
Porto Rico, San Juan.	18 29	66 08	1852	50 15	. .	. .	. .	. .	. .	. .	Norwegian officer.
Cayman Isd.	19 14	81 05	1822	48 48	. .	. .	. .	. .	. .	. .	E. Sabine.
Pt. Plata, San Domingo.	19 49	70 41	1889·9	49 50	·3074	·4766	. .	. .	. .	. .	Officer, U. S. N.
Baracoa, Cuba.	20 22	74 29	1831	50 07	. .	. .	. .	. .	. .	. .	— Foster.
Cape San Antonio, Cuba.	21 55	84 55	1879·27	50 14·9	·3244	·5072	50 15	0·3180	0·3823	0·4973	S. M. Ackley.
Bahia Honda, Cuba.	22 58	83 12	1879·24	52 18·4	·3162	·5171	52 18	·3100	·4012	·5070	"
Matanzas, Cuba.	23 03	81 37	1879·18	52 23·4	·3146	·5155	52 21	·3084	·3998	·5049	"
Habana, College de Belen.	23 08	82 21	1886·99	52 13·3	·3123	·5098	52 12	·3083	·3975	·5030	B. Viñes.
Habana.	23 09	82 20	1889·1	52 10	. .	. .	52 09	. .	. .	. .	— Aubrey.
Water Cay.	23 59	80 21	1879·16	53 41·6	·3109	·5250	53 38	·3059	·4154	·5159	S. M. Ackley.
Nassau, New Providence Isd.	25 05	77 20	1879·14	55 50·5	·2998	·5340	55 40	·2960	·4334	·5248	"
South Bemini.	25 42	79 18	1879·15	56 20·3	0·2973	0·5364	56 08	0·2936	0·4375	0·5269	"

MEXICO AND CENTRAL AMERICA.

Panama.	8 54	79 30	1866·37	31 56	0·3511	0·4137	. .	. .	. .	. .	W. Harkness.
Chagres, Castle of San Lorenzo.	9 20	80 01	1834·71	32 30	·3481	·4159	. .	. .	. .	. .	E. Home.
Nicaragua or Rivas.	10 56	83 42	1839	34 43	. .	. .	. .	. .	. .	. .	E. Barnett.
Nicaragua, Point Arenas.	10 58	83 43	1834·69	34 05	·3486	·4306	. .	. .	. .	. .	E. Home.
Realejo, Nicaragua.	12 28	87 08	1838	34 36·9	. .	. .	. .	. .	. .	. .	E. Belcher.
La Union, San Salvador.	13 17	87 46	1880·84	38 23·9	·3358	·4285	. .	. .	. .	. .	H. E. Nichols.
Acajutla, San Salvador.	13 34	89 51	1880·85	37 49·7	·3457	·4377	. .	. .	. .	. .	"
Port Escondido.	16 04	96 57	1880·88	39 13·2	·3460	·4466	. .	. .	. .	. .	"
Salina Cruz, Tehuantepec.	16 10	95 12	1889·2	40 02	·3426	·4475	. .	. .	. .	. .	U. S. Naval officer.
Acapulco, near Fort San Diego.	16 50	99 53	1892·88	40 25	·3462	·4547	40 45	0·3405	0·2934	0·4495	L. Mottez.
Belize, British Honduras.	17 29	88 12	1879·29	43 32·3	·3424	·4723	. .	. .	. .	. .	S. M. Ackley.
Coatzacoalcos, Mexico.	18 08	94 26	1889·14	43 03	·3360	·4598	43 25	·3306	·3125	·4547	U. S. Naval officer.
Clarion Island, Lower Cal.	18 20	114 42	1880·77	39 34	·3392	·4401	40 22	. .	. .	. .	H. E. Nichols.
Laguna de Terminos, Gulf of Campeche.	18 38	93 00	1880·17	44 18·3	·3390	·4738	44 54	·3310	·3298	·4673	S. M. Ackley.
Socorro Island.	18 43	110 54	1880·77	41 18·7	·3464	·4612	42 03	. .	. .	. .	H. E. Nichols.
Cocolopam, Orizaba.	18 53	97 04	1856·65	42 51	·3495	·4767	. .	. .	. .	. .	A. Sonntag and v. Mueller.
Potrero.	18 56	96 48	1856·62	42 51	·3492	·4763	. .	. .	. .	. .	"
San Andres, Puebla.	18 59	97 15	1856·71	42 38	·3499	·4756	. .	. .	. .	. .	"
Manzanilla.	19 03	104 20	1880·91	43 15·8	·3375	·4634	43 58	·3246	·3130	·4509	H. E. Nichols.
Tlamacas.	19 03	98 39	1857·07	42 34	·3491	·4740	. .	. .	. .	. .	A. Sonntag and v. Mueller.
Vera Cruz.	19 12	96 08	1880·11	44 04·6	·3408	·4744	44 42	·3307	·3273	·4653	S. M. Ackley.
Vera Cruz.	19 12	96 08	1888·97	44 20	. .	. .	44 41	. .	. .	. .	U. S. Naval officers.
Mirador.	19 13	96 37	1856·77	43 50	·3468	·4808	. .	. .	. .	. .	A. Sonntag and v. Mueller.
Chalco.	19 18	98 51	1857·01	43 12	·3477	·4770	. .	. .	. .	. .	"
Tacubaya, Mexico.	19 26	99 07	1895·3	44 23·5	·3344	·4681	44 33	·3320	·3268	·4659	M. Morena y Anda.
Campeche, Yucatan.	19 50	90 33	1880·19	46 20·7	·3333	·4832	46 50	·3254	·3469	·4757	S. M. Ackley.
Cozumel.	20 33	86 57	1879·31	48 06·5	·3309	·4955	48 27	·3261	·3679	·4916	"
Mugeres Island.	21 15	86 46	1879·32	49 32·9	·3257	·5019	49 52	·3209	·3806	·4979	"
Progresso, Yucatan.	21 17	89 40	1880·20	48 52·3	·3269	·4970	49 12	·3204	·3712	·4903	"
San Blas, Mex.	21 32	105 18	1880·93	46 20·8	·3321	·4811	46 59	·3194	·3423	·4682	H. E. Nichols.
Contoy Island.	21 32	86 49	1838	49 48	. .	. .	. .	. .	. .	. .	E. Barnett.
Arenas Cay.	22 07	91 25	1880·08	49 35·8	·3275	·5053	49 56	·3198	·3803	·4968	S. M. Ackley.
Perez Island.	22 24	89 42	1880·06	50 09·7	0·3253	0·5078	50 30	0·3182	0·3860	0·5003	"

Collection of the most recent magnetic dips and intensities observed in the United States and referred to the epoch 1900·0—Continued.

MEXICO AND CENTRAL AMERICA—Continued.

Name of station.	Lat.	Long.	Date.	Dip θ.	Hor. force H.	Total force F.	θ_{1900}	H_{1900}	V_{1900}	F_{1900}	Observer.
	° ′	° ′		° ′			° ′				
Cape San Lucas, Lower Cal.	22 54	109 55	1881·14	47 23·2	0·3275	0·4837	48 01	0·3121	0·3468	0·4666	H. E. Nichols.
San José del Cabo.	23 04	109 41	1873·15	47 25·2	·3231	·4775	48 19	. .	. .	. .	W. Eimbeck.
Mazatlan.	23 11	106 27	1881·11	48 15·8	·3250	·4882	48 52	·3127	·3580	·4753	H. E. Nichols.
La Paz, El Mogote.	24 10	110 21	1881·10	49 10·1	·3238	·4952	49 48	·3085	·3651	·4780	"
Pichilinque Bay.	24 15	110 20	1881·09	49 48·5	·3175	·4919	50 26	·3025	·3661	·4749	"
Magdalena Bay.	24 38	112 09	1881·14	48 18·7	·3243	·4875	48 53	·3098	·3549	·4711	"
Isle San Josef.	24 55	110 37	1881·09	49 38·5	·3153	·4869	50 10	·3004	·3601	·4689	"
Loreto.	26 01	111 20	1881·08	51 00·8	·3130	·4976	51 29	·2982	·3746	·4789	"
Pequeña Bay.	26 16	112 28	1881·15	51 48·1	·3084	·4988	52 16	·2939	·3798	·4803	"
Santa Barbara Bay.	26 41	109 38	1880·97	52 21·2	·3105	·5084	52 46	·2958	·3892	·4889	"
Point Abreojos.	26 47	113 32	1890·04	51 52	? ·3199	? ·5181	52 05	. .	. .	. .	C. F. Pond.
"	26 47	113 32	1881·17	51 47·7	·3090	·4999	. .	·2945	. .	. .	H. E. Nichols.
Mulege.	26 54	111 58	1881·06	52 05·5	·3101	·5047	52 30	·2954	·3849	·4853	"
Asuncion Island.	27 06	114 18	1889·92	51 53	? ·3209	? ·5199	52 06	. .	. .	. .	C. F. Pond.
"	27 06	114 18	1881·18	51 43·4	·3094	·4994	. .	·2949	. .	. .	H. E. Nichols.
Santa Rosalia.	27 20	112 18	1892·85	52 40	·3136	·5171	52 49	·3080	·4060	·5096	L. Mottez.
Santa Maria Cove.	27 25	112 19	1881·05	52 56·8	·3080	·5112	53 21	·2934	·3944	·4916	H. E. Nichols.
San Bartolomé Bay.	27 39	114 52	1888·39	52 58·0	? ·3164	? ·5254	53 13	. .	. .	. .	C. F. Pond.
Guaymas, Mex.	27 55	110 53	1880·99	52 58·0	·3052	·5068	53 19	·2907	·3902	·4865	H. E. Nichols.
Cerros Island, SE. Bay.	28 03	115 13	1888·23	53 03·1	? ·3121	? ·5193	53 15	. .	. .	. .	C. F. Pond.
Cerros Island, Morro Rodondo Bay.	28 04	115 12	1888·42	52 54·7	? ·3156	? ·5234	53 08	. .	. .	. .	"
	28 04	115 12	1881·19	52 55·0	·3045	·5049	. .	·2902	. .	. .	H. E. Nichols.
Lagoon Head.	28 15	114 06	1888·04	54 00·7	? ·3193	? ·5434	54 13	. .	. .	. .	C. F. Pond.
San Benito Island.	28 18	115 35	1889·10	52 49·4	? ·3279	? ·5426	53 02	. .	. .	. .	"
Santa Teresa Bay.	28 25	112 52	1881·05	53 49·0	·3030	·5132	54 08	·2886	·3992	·4926	H. E. Nichols.
Rosalia Bay.	28 40	114 14	1888·23	56 07·2	? ·2954	? ·5300	56 19	. .	. .	. .	C. F. Pond.
Guadalupe Island.	28 55	118 15	1881·21	53 38·9	·2961	·4995	53 58	·2822	·3880	·4797	H. E. Nichols.
Playa Maria.	28 56	114 32	1889·38	55 10·9	? ·3024	? ·5296	55 22	. .	. .	. .	C. F. Pond.
Tiburon Island.	29 11	112 27	1881·00	54 59·2	·2986	·5205	55 18	·2844	·4107	·4996	H. E. Nichols.
Presidio del Norte Rio Grande.	29 34	104 25	1852	55 41	. .	. .	. .	. .	. .	. .	W. H. Emory.
San Geronimo Island.	29 47	115 48	1888·44	54 52·2	? ·3091	? ·5372	55 02	. .	. .	. .	C. F. Pond.
"	29 47	115 48	1881·23	54 30·0	·2965	·5106	. .	·2826	. .	. .	H. E. Nichols.
San Luis Gonzales.	29 51	114 25	1881·04	55 11·3	·2962	·5189	55 23	·2821	·4087	·4966	"
San Quentin.	30 22	115 58	1839	54 29·9	·2982	·5261	. .	. .	. .	. .	E. Belcher.
San Martin Island.	30 29	116 07	1888·45	55 21·0	? ·3084	? ·5425	55 29	. .	. .	. .	C. F. Pond.
"	30 29	116 07	1881·24	55 34·4	·2940	·5201	. .	·2802	. .	. .	H. E. Nichols.
Cape Colnet.	30 58	116 17	1889·40	56 27·2	? ·3045	? ·5510	56 32	. .	. .	. .	C. F. Pond.
Point San Felipe.	31 02	114 50	1881·03	56 25·2	·2892	·5229	56 35	·2782	·4217	·5052	H. E. Nichols.
Rocky Point, Mexico.	31 17	113 33	1881·01	57 14·7	·2882	·5326	57 22	·2772	·4329	·5140	"
Espia.	31 21	107 56	1855·22	57 59	·2878	·5427	. .	. .	. .	. .	W. H. Emory.
Santo Tomas, anch'rage.	31 33	116 41	1889·41	57 10·5	? ·2942	? ·5427	57 16	. .	. .	. .	C. F. Pond.
Philipps Pt., Mexico.	31 46	114 43	1881·02	57 31·8	·2852	·5312	57 38	·2774	·4329	·5126	H. E. Nichols.
El Paso del Norte, Initial Point.	31 47	106 28	1855·1	58 39	·2860	·5496	. .	. .	. .	. .	W. H. Emory.
Todos Santos.	31 51	116 38	1881·25	58 30·6	·2787	·5336	58 37	0·2682	0·4397	0·5151	H. E. Nichols.
Los Coronados Islands.	32 25	117 15	1889·43	57 49·8	? ·2958	? ·5556	57 54	. .	. .	. .	C. F. Pond.

DOMINION OF CANADA (TO LONGITUDE 75° WEST).

Yarmouth.	43 50	66 07	1881·85	74 35	0·1602	0·6026	73 41	0·1652	0·5643	0·5880	S. W. Very.
Weymouth.	44 24	66 00	1881·86	74 45	·1596	·6068	73 51	·1646	·5683	·5917	"
Halifax, Naval Yard.	44 40	63 35	1896·51	73 54	·1632	·5885	74 08	·1654	·5819	·6049	G. R. Putnam.
Annapolis.	44 44	65 31	1881·87	74 53	·1581	·6059	73 59	·1631	·5681	·5910	S. W. Very.
Windsor.	45 00	64 08	1881·89	74 49	·1578	·6026	73 55	0·1628	0·5646	0·5876	"
Lake Memphremagog, east shore.	45 01	72 15	1845·5	76 08·6	. .	. .	. .	. .	. .	. .	A. W. Whipple.
Stanstead.	45 02	72 07	1842·70	76 19·2	·1486	·6282	. .	. .	. .	. .	J. H. Lefroy.
Cornwall.	45 02	74 50	1845·46	76 16·4	·1509	·6358	. .	. .	. .	. .	C. Younghusband.
Chamcook.	45 08	67 05	1859·79	76 09·4	0·1494	0·6245	. .	. .	. .	. .	G. W. Dean.
Kentville.	45 12	64 46	1847·5	75 46	. .	. .	. .	. .	. .	. .	G. W. Keely.
St. John, N. B.	45 14	66 03	1847·5	75 56	. .	. .	. .	. .	. .	. .	"
St. Johns, Quebec.	45 17	73 15	1842·70	77 00·1	. .	. .	. .	. .	. .	. .	J. H. Lefroy.

Collection of the most recent magnetic dips and intensities observed in the United States and referred to the epoch 1900·0—Continued.

DOMINION OF CANADA (TO LONGITUDE 75° WEST)—Continued.

Name of station.	Lat.	Long.	Date.	Dip θ.	Hor. force H.	Total force F.	θ_{1900}	H_{1900}	V_{1900}	F_{1900}	Observer.
	° ′	° ′		° ′			° ′				
Isle d'Urval.	45 25	73 44	1843·33	77 03·1	0·1410	0·6291	. .	. .	. .	. .	L. H. Lefroy.
Isle Madame.	45 28	61 03	1862·5	75 31	. .	. .	. .	. .	. .	. .	—— Shadwell.
Arichat, Isle Madame.	45 30	61 01	1881·82	74 43	·1584	·6008	73 49	0·1634	0·5630	0·5861	S. W. Very.
Montreal, McGill Univ'y	45 30	73 35	1896·79	75 40·2	·1507	·6090	75 34	·1522	·5916	·6109	R. L. Faris.
Montreal, near Artillery Barracks.	45 31	73 32	1842·71	77 13·1	·1400	·6326					J. H. Lefroy.
La Combe Farm.	45 33	74 09	1843·33	76 50·6	·1454	·6388	. .	. .	. .	. .	"
Pointe aux Chenès.	45 37	74 55	1843·33	76 55·4	·1421	·6281	. .	. .	. .	. .	"
Richmond.	45 41	72 03	1876·62	75 47·4	·1558	·6347	74 37	·1608	·5845	·6062	F. E. Hilgard.
Kingsey.	45 46	72 12	1842·69	77 40·0	·1348	·6311	. .	. .	. .	. .	J. H. Lefroy.
Louisburg.	45 53	60 00	1862·5	76 00	. .	. .	74 26	. .	. .	. .	—— Shadwell.
Fredericton, N. B.	45 55	66 38	1847·5	76 59	. .	. .	. .	. .	. .	. .	G. W. Keely.
Sorel.	46 02	73 03	1842·69	77 16·4	·1397	·6340	. .	. .	. .	. .	J. H. Lefroy.
Sydney, Cape Breton.	46 08	60 12	1896·53	74 38·6	·1547	·5842	74 28	·1560	·5612	·5825	G. R. Putnam.
Woodstock.	46 09	67 35	1847·5	77 05	. .	. .	. .	. .	. .	. .	G. W. Keely.
Cape Breton.	46 16	60 08	1862·5	76 03	. .	. .	74 29	. .	. .	. .	—— Shadwell.
Three Rivers.	46 21	72 32	1842·68	77 10·7	·1416	·6383	. .	. .	. .	. .	J. H. Lefroy.
Becancour.	46 22	71 33	1876·63	76 54·5	·1438	·6348	75 44	. .	. .	. .	F. E. Hilgard.
St. Pierre de Miquelon.	46 47	56 11	1881·78	75 02	·1501	·5810	74 07	. .	. .	. .	S. W. Very.
Quebec, near Wolfe's Monument.	46 48	71 14	1879·71	76 45·1	·1431	·6245	76 13	·1481	·6038	·6217	J. B. Baylor.
St. Thomas.	46 59	70 33	1876·64	77 11·7	·1394	·6290	76 02	·1454	·5847	·6024	F. E. Hilgard.
Edmonston, N. B.	47 15	68 20	1876·66	77 18·3	·1369	·6229	76 08	·1429	·5789	·5962	"
St. Johns, N. F.	47 34	52 42	1883·49	74 47	·1518	·5783	73 57	. .	. .	. .	W. H. Lamar and F. W. Ellis.
Riviere du Loup-en-bas.	47 51	69 25	1876·66	77 31·6	·1359	·6292	76 22	0·1421	0·5859	0·6028	F. E. Hilgard.
Brandypot Island.	47 53	69 42	1830·5	78 35	. .	. .	. .	. .	. .	. .	H. W. Bayfield.
Gaspe Basin.	48 50	64 30	1832·0	78 50	. .	. .	. .	. .	. .	. .	"
Twillingate, N. F.	49 39	54 46	1881·53	75 57	·1406	·5791	75 02	. .	. .	. .	S. W. Very.
Battle Harbor, Caribou Islands, Labrador.	52 16	55 34	1881·70	77 16	0·1277	0·5796	76 21	. .	. .	. .	"

DOMINION OF CANADA (BETWEEN LONGITUDES 75° AND 90° WEST).

Amherstburg.	42 06	83 03	1845·80	73 30·3	0·1801	0·6344	. .	. .	. .	. .	J. H. Lefroy.
Sarnia.	42 58	82 22	1845·82	74 15·7	·1727	·6368	. .	. .	. .	. .	"
Niagara Falls, Clifton House.	43 04	79 05	1845·79	74 46·8	·1665	·6343	. .	. .	. .	. .	"
Cape Ippewash.	43 13	82 00	1860·35	74 46	·1675	·6427	. .	. .	. .	. .	W. P. Smith.
Niagara Village, C. W.	43 15	79 08	1843·19	74 45·6	·1678	·6387	. .	. .	. .	. .	J. H. Lefroy.
Hamilton, C. W.	43 16	79 50	1845·83	74 54·1	·1660	·6374	. .	. .	. .	. .	"
Toronto, magnetic observatory.	43 39	79 23	1895·2	74 33·7	·1664	·6252	74 19	0·1691	0·6020	0·6252	[Letter of O. J. Klotz.]
Goderich.	43 44	81 43	1860·55	75 02	·1648	·6382	. .	. .	. .	. .	W. P. Smith.
Coburg.	43 56	78 10	1843·28	75 27·2	. .	. .	. .	. .	. .	. .	"
Belleville.	44 09	77 25	1843·29	77 01·0	. .	. .	. .	. .	. .	. .	"
Kingston.	44 13	76 29	1845·44	77 14·5	·1539	·6967	. .	. .	. .	. .	C. Younghusband.
Barrie.	44 21	79 41	1843·06	75 49·9	. .	. .	. .	. .	. .	. .	J. H. Lefroy.
Brookville.	44 32	75 41	1845·45	76 18·9	·1496	·6322	. .	. .	. .	. .	C. Younghusband.
Prescot.	44 35	75 30	1843·30	78 42·5	. .	. .	. .	. .	. .	. .	J. H. Lefroy.
Penetanguishene.	44 47	79 58	1844·86	76 20·1	·1533	·6491	. .	. .	. .	. .	"
Williamsburg.	44 55	75 07	1843·30	76 30·8	·1502	·6439	. .	. .	. .	. .	"
Aylmer.	45 15	75 58	1843·34	76 41	·1470	·6380	. .	. .	. .	. .	"
Cove Island.	45 20	81 43	1860·66	76 32	·1506	·6484	. .	. .	. .	. .	W. P. Smith.
Ottawa.	45 21	75 42	1856·6	76 42	. .	. .	. .	. .	. .	. .	K. Friesach.
Chat Falls.	45 26	76 32	1843·34	75 07	·1648	·6416	. .	. .	. .	. .	J. H. Lefroy.
Fox Point.	45 32	75 22	1843·34	76 35·3	·1484	·6398	. .	. .	. .	. .	"
Grande Calumet.	45 45	76 40	1843·35	76 44·4	·1463	·6378	. .	. .	. .	. .	"
Fort Coulonge.	45 55	76 45	1843·35	77 29·7	·1389	·6414	. .	. .	. .	. .	"
Point au Croix.	45 56	81 02	1843·37	76 31·3	·1494	·6410	. .	. .	. .	. .	"
Ricollet Fall.	45 57	80 30	1843·37	76 45·4	·1493	·6515	. .	. .	. .	. .	"
Frazer Bay.	46 00	81 40	1843·38	77 05·6	·1432	·6412	. .	. .	. .	. .	"
Pointe Bapteme.	46 05	77 26	1843·36	77 19·1	·1394	·6351	. .	. .	. .	. .	"
Fort La Cloche.	46 07	82 03	1843·38	76 50·2	. .	. .	. .	. .	. .	. .	"
Snake Island.	46 10	82 40	1843·38	77 05·5	0·1427	0·6386	. .	. .	. .	. .	"

Collection of the most recent magnetic dips and intensities observed in the United States and referred to the epoch 1900·0—Continued.

DOMINION OF CANADA (BETWEEN LONGITUDES 75° AND 90° WEST)—Continued.

Name of station.	Lat.	Long.	Date.	Dip θ.	Hor. force H.	Total force F.	θ_{1900}	H_{1900}	V_{1900}	F_{1900}	Observer.
	° ′	° ′		° ′			° ′				
Lake Nipessing.	46 11	79 48	1843·37	77 09·5	0·1420	0·6391	. .	. .	. .	. .	J. H. Lefroy.
Port des deux Joachims.	46 12	77 40	1843·36	77 03·8	·1428	·6377	. .	. .	. .	. .	"
Trou Portage.	46 15	78 16	1843·36	77 24·4	·1399	·6415	. .	. .	. .	. .	"
Little Riv., first portage.	46 15	78 44	1843·37	77 28·5	·1395	·6435	. .	. .	. .	. .	"
Thessalon Point.	46 17	83 33	1843·38	76 59·3	·1455	·6464	. .	. .	. .	. .	"
Trout Lake.	46 18	79 13	1843·37	77 21·7	·1407	·6432	. .	. .	. .	. .	"
Pointe aux Pins.	46 30	84 29	1843·39	77 13·4	·1436	·6492	. .	. .	. .	. .	"
Saint Mary.	46 31	84 21	1844·84	. .	·1398	·6374	. .	. .	. .	. .	"
"	46 31	84 21	1845·4	77 19·5	. .	. .	. .	. .	. .	. .	J. Rae.
Gros Cap.	46 32	84 43	1841·6	77 05·3	. .	. .	. .	. .	. .	. .	E. Loomis.
Pointe aux Crepes.	46 58	84 44	1843·39	77 11·5	·1427	·6436	. .	. .	. .	. .	J. H. Lefroy.
Cape Gargantua.	47 37	85 05	1843·39	77 56·1	·1471	·7038	. .	. .	. .	. .	"
Foot of Long Portage.	47 55	84 45	1880·62	. .	·1299	. .	. .	0·1309	. .	. .	S. W. Very.
Michipicoten, Hudson Bay Company Post.	47 56	84 51	1844·1	78 07·2	·1323	·6462	. .	. .	. .	. .	J. H. Lefroy and J. Rae.
"	47 56	84 51	1880·62	. .	·1319	. .	. .	·1329	. .	. .	S. W. Very.
Otter Island.	48 07	86 07	1843·39	79 43·6	·1116	·6256	. .	. .	. .	. .	J. H. Lefroy.
Big Stony Portage.	48 14	84 15	1880·62	. .	·1268	. .	. .	·1280	. .	. .	S. W. Very.
Tip Top.	48 15	86 08	1871·65	78 56	·1249	·6358	78 05	·1256	0·5951	0·6083	C. B. Comstock.
Sandy Beach, Dog Lake.	48 18	84 01	1880·57	. .	·1284	. .	. .	·1296	. .	. .	S. W. Very.
Thunder Cape.	48 20	88 52	1843·41	78 23·2	·1320	·6556	. .	. .	. .	. .	J. H. Lefroy.
Fairy Point, Missinaibi Lake.	48 21	83 44	1880·57	. .	·1268	. .	. .	·1280	. .	. .	S. W. Very.
Fort William.	48 23	89 13	1844·1	78 04·7	·1324	·6491	. .	. .	. .	. .	J. Franklin and J. H. Lefroy.
Portage Ecarté.	48 25	89 44	1843·42	77 13·5	·1429	·6461	. .	. .	. .	. .	J. H. Lefroy.
Missinaibi Post.	48 29	83 28	1880·58	. .	·1254	. .	. .	·1266	. .	. .	S. W. Very.
White River.	48 32	86 14	1844·80	78 33·1	·1292	·6509	. .	. .	. .	. .	J. H. Lefroy.
The Pic.	48 35	86 15	1844·1	78 36·6	·1257	·6409	. .	. .	. .	. .	"
Dog Portage.	48 39	89 30	1844·1	78 26·8	·1308	·6512	. .	. .	. .	. .	"
Foot of Swampy-ground Portage.	48 41	83 24	1880·68	. .	·1269	. .	. .	·1281	. .	. .	S. W. Very.
Peninsula Harbor.	48 44	86 28	1824·5	78 34	. .	. .	. .	. .	. .	. .	H. W. Bayfield.
Battle Island.	48 45	87 33	1844·1	78 24	·1266	·6298	. .	. .	. .	. .	J. H. Lefroy.
Simpson Island.	48 49	87 45	1843·41	78 53·6	·1245	·6464	. .	. .	. .	. .	"
St. Paul Portage.	48 50	83 23	1880·67	. .	·1219	. .	. .	·1231	. .	. .	S. W. Very.
Moose River.	49 08	83 22	1880·67	. .	·1194	. .	. .	·1206	. .	. .	"
Twin Passage.	49 12	83 24	1880·59	. .	·1216	. .	. .	·1228	. .	. .	"
Albany Rapids.	49 22	83 30	1880·67	. .	·1171	. .	. .	·1183	. .	. .	"
Kettle Portage.	49 47	83 16	1880·60	. .	·1141	. .	. .	·1153	. .	. .	"
Storehouse Portage.	50 04	83 16	1880·66	. .	·1139	. .	. .	·1151	. .	. .	"
Near Cedar Island.	50 21	82 42	1880·66	. .	·1131	. .	. .	·1143	. .	. .	"
Near Small Falling Brook.	50 36	82 07	1880·61	. .	·1066	. .	. .	·1078	. .	. .	"
Ship Sands.	51 08	80 44	1846·5	81 02	·1011	·6487	. .	. .	. .	. .	T. E. L. Moore.
Moose Factory.	51 15	80 40	1846·5	81 30	0·0962	0·6510	. .	. .	. .	. .	"
"	51 15	80 40	1880·63	. .	0·0973	. .	. .	0·0984	. .	. .	S. W. Very.
Fort Albany.	52 22	82 38	1775	79 20	. .	. .	. .	. .	. .	. .	— Hutchins.

BRITISH POSSESSIONS, NORTHWEST AMERICA (SOUTH OF LATITUDE 51° AND WEST OF LONGITUDE 90° W.).

Second Portage.	48 14	92 25	1843·44	77 40·1	0·1381	0·6467	. .	. .	. .	. .	J. H. Lefroy.
Ile à la Crosse Lake.	48 24	92 04	1843·44	77 51·0	·1365	·6485	. .	. .	. .	. .	"
Victoria, Vancouver Island.	48 26	123 22	1880·34	71 22·1	·1893	·5926	71 14	0·1878	0·5527	0·5837	W. H. Dall and M. Baker.
Esquimault.	48 26	123 27	1892·73	71 27·4	·1905	·5990	71 24	0·1900	0·5646	0·5957	L. Mottez.
Sturgeon Lake.	48 27	92 38	1843·44	77 44·8	·1378	·6491	. .	. .	. .	. .	J. H. Lefroy.
Rainy Lake.	48 33	92 50	1843·45	77 47·9	·1374	·6499	. .	. .	. .	. .	"
French Portage.	48 35	91 08	1843·43	78 20·4	·1311	·6487	. .	. .	. .	. .	"
Portage of the two rivers.	48 35	91 23	1843·43	77 49·4	·1364	·6469	. .	. .	. .	. .	"
Fort Frances.	48 37	93 27	1844·6	77 30	·1402	·6466	. .	. .	. .	. .	"
Rainy River.	48 41	94 31	1843·46	77 57·4	·1370	·6598	. .	. .	. .	. .	"
Savanne Portage.	48 53	90 03	1843·43	78 21·8	0·1312	0·6504	. .	. .	. .	. .	"

Collection of the most recent magnetic dips and intensities observed in the United States and referred to the epoch 1900·0—Continued.

BRITISH POSSESSIONS, NORTHWEST AMERICA (SOUTH OF LATITUDE 51° AND WEST OF LONGITUDE 90° W.)—Continued.

Name of station.	Lat.	Long.*	Date.	Dip θ.	Hor. force H.	Total force F.	θ_{1900}	H_{1900}	V_{1900}	F_{1900}	Observer.
	° ′	° ′		° ′			° ′				
Prairie Portage.	48 57	90 01	1844·6	78 26·1	0·1307	0·6495	. .	. .	. .	. .	J. H. Lefroy.
Ashtnolou Station.	49 00	120 00	1860·63	72 27·0	·1850	·6142	72 07	. .	. .	. .	R. W. Haig.
Inshwointum Station.	49 00	118 28	1860·91	72 48·8	·1808	·6119	72 29	. .	. .	. .	"
Wigwam River Station.	49 00	114 45	1861·57	73 30·8	·1764	·6223	73 02	. .	. .	. .	"
Akamina Station.	49 01	114 04	1861·58	73 42·7	·1757	·6265	73 16	. .	. .	. .	"
Semi-ah-moo.	49 01	122 46	1857·73	71 57·0	·1892	·6106	. .	. .	. .	. .	J. S. Harris.
Sumass Prairie.	49 01	122 12	1858·80	72 22·0	·1868	·6163	. .	. .	. .	. .	R. W. Haig.
Schweltzer Lake.	49 02	122 00	1859·51	72 03·9	·1886	·6125	. .	. .	. .	. .	"
Chilukweyuck Lake.	49 02	121 23	1859·68	72 31·0	·1826	·6077	. .	. .	. .	. .	"
Chilukweyuck Camp.	49 06	121 23	1859·5	72 22·2	·1855	·6124	72 06	. .	. .	. .	J. S. Harris.
Camp No. 11.	49 07	115 16	1861·5	73 37·8	. .	. .	73 11	. .	. .	. .	"
On Ashtnolou River.	49 10	120 00	1860·6	72 36·9	·1822	·6098	72 21	. .	. .	. .	R. W. Haig.
Nanaimo.	49 10	124 00	1862·5	71 54	. .	. .	71 46	. .	. .	. .	G. H. Richards.
Departure Bay.	49 13	123 58	1881·76	71 42·2	·1875	·5971	71 39	0·1870	0·5638	0·5939	H. E. Nichols.
New Westminster.	49 13	122 53	1862·5	72 15	. .	. .	72 04	. .	. .	. .	G. H. Richards.
Hecate Bay.	49 15	125 56	1861·5	72 37	. .	. .	72 30	. .	. .	. .	"
Burrard Inlet.	49 16	123 10	1859·5	72 14	. .	. .	72 02	. .	. .	. .	"
Lake of the Woods, Falcon Island.	49 19	94 40	1843·46	78 03·7	·1346	·6506	. .	. .	. .	. .	J. H. Lefroy.
Lake of the Woods.	49 25	94 37	1843·46	78 16·7	·1315	·6475	. .	. .	. .	. .	"
Joseph Prairie, Camp No. 14.	49 31	115 35	1861·5	73 50·4	·1733	·6227	73 24	. .	. .	. .	J. S. Harris.
Nootka Sound.	49 36	126 37	1881·74	71 33·0	·1883	·5948	71 28	·1880	·5608	·5916	H E. Nichols.
Henry Bay.	49 36	124 51	1860·5	72 25	. .	. .	72 09	. .	. .	. .	G. H. Richards.
Gap in Cypress Hills.	49 38	109 51	1880·58	75 20·4	. .	. .	75 01	. .	. .	. .	W. F. King.
Willow Creek.	49 45	113 24	1880·63	74 46·3	. .	. .	74 34	. .	. .	. .	"
Rat Portage.	49 46	94 33	1844·1	78 07·5	·1325	·6466	. .	. .	. .	. .	J. H. Lefroy.
Fort Garry, Upper Fort.	49 53	97 16	1843·50	78 18·8	·1314	·6478	. .	. .	. .	. .	"
Winnipeg, C. P. R. Station.	?49 53	?97 16	1882·40	79 50·2	. .	. .	79 25	. .	. .	. .	W. Ogilvie.
Station R, at Maple Creek.	50 03	108 51	1880·56	75 50·1	. .	. .	75 31	. .	. .	. .	W. F. King.
Winnipeg River.	50 10	95 12	1843·47	79 10·6	·1230	·6549	. .	. .	. .	. .	J. H. Lefroy.
Slave Falls.	50 15	95 40	1843·47	78 57·1	·1245	·6498	. .	. .	. .	. .	"
Red River.	50 18	96 52	1843·51	78 34	·1288	·6498	. .	. .	. .	. .	"
Station W.	50 22	113 49	1880·64	74 44·1	. .	. .	74 30	. .	. .	. .	W. F. King.
Station P, Old Woman Lake.	50 29	106 47	1880·55	76 51·2	. .	. .	76 31	. .	. .	. .	"
North Harbor, Quatsino Sound.	50 29	128 04	1881·73	71 41·3	·1867	·5943	71 38	·1867	·5622	·5925	H. E. Nichols.
Porte Neville.	50 31	126 04	1860·5	72 19	. .	. .	. .	. .	. .	. .	G. H. Richards.
Lake Winnipeg.	50 35	96 36	1843·49	78 34·4	·1290	·6514	. .	. .	. .	. .	J. H. Lefroy.
Fort Alexander.	50 37	96 22	1844·72	78 58·4	·1244	·6500	. .	. .	. .	. .	"
Thompson River.	50 41	120 11	1833·3	73 43	·1665	·5939	. .	. .	. .	. .	D. Douglas.
Station A, Ellice and Touchwood Trail.	50 42	102 00	1880·39	77 51·5	. .	. .	77 30	. .	. .	. .	W. F. King
Beaver Harbor.	50 43	127 25	1860·5	72 37	. .	. .	. .	. .	. .	. .	G. H. Richards.
Station K, near Fort Qu'Appelle.	50 46	103 48	1880·51	77 23·2	. .	. .	77 04	. .	. .	. .	W. F. King.
Anchorage Cove.	50 53	126 12	1881·59	72 46·1	·1756	·5929	72 43	·1756	·5643	·5910	H E. Nichols.
Waddington Harbor.	50 54	124 50	1881·58	71 58·6	0·1847	0·5966	71 56	0·1847	0·5662	0 5956	"

BRITISH POSSESSIONS, NORTHWEST AMERICA (NORTH OF LATITUDE 51° AND WEST OF LONGITUDE 90° W.).

Land Survey station.	51 01	111 40	1882·60	76 13·2	. .	. .	. .	. .	. .	. .	W. Ogilvie.
Station X, on Bow Riv.	51 02	114 00	1880·69	75 23·4	. .	. .	. .	. .	. .	. .	W. F. King.
Lake Winnipeg.	51 04	96 56	1843·51	79 11·8	0·1218	0·6497	. .	. .	. .	. .	J. H. Lefroy.
" "	51 04	96 26	1844·72	79 31·5	0·1217	0·6693	. .	. .	. .	. .	"
Station O, near Elbow.	51 05	106 37	1880·54	77 03·9	. .	. .	. .	. .	. .	. .	W. F. King.
Land Survey station.	51 05	110 15	1882·53	76 14·1	. .	. .	. .	. .	. .	. .	W. Ogilvie.
Station Y, Morleyville.	51 10	114 48	1880·71	75 17·0	. .	. .	. .	. .	. .	. .	W. F. King.
Station J, on Appelle Trail.	51 12	103 54	1880·50	77 51·6	. .	. .	. .	. .	. .	. .	"

Collection of the most recent magnetic dips and intensities observed in the United States and referred to the epoch 1900·0—Continued.

BRITISH POSSESSIONS, NORTHWEST AMERICA (NORTH OF LATITUDE 51° AND WEST OF LONGITUDE 90° W.)—Continued.

Name of station.	Lat.	Long.*	Date.	Dip θ.	Hor. force H.	Total force F.	θ_{1900}	H_{1900}	V_{1900}	F_{1900}	Observer.
	° ′	° ′		° ′			° ′				
Station I, near H. B. House.	51 22	104 00	1880·49	77 53·2	. .	. .	. .	. .	. .	. .	W. F. King.
Station H, on Pelly's Trail.	51 32	103 43	1880·49	78 12·0	. .	. .	. .	. .	. .	. .	"
Lake Winnipeg.	51 34	96 43	1844·71	79 06·1	0·1255	0·6636	. .	. .	. .	. .	J. H. Lefroy.
" "	51 37	96 53	1843·51	79 38·0	·1200	·6668	. .	. .	. .	. .	"
Station G.	51 39	103 08	1880·48	78 21·2	. .	. .	. .	. .	. .	. .	W. F. King.
Lake Winnipeg, opposite Tete du Chien.	51 44	97 02	1844·71	79 39	·1274	·7092	. .	. .	. .	. .	J. H. Lefroy.
Station D, Assiniboine River.	51 45	102 01	1880·46	78 34·7	. .	. .	. .	. .	. .	. .	W. F. King.
Lake Winnipeg, island east of Bear Island.	51 46	97 00	1843·52	79 28·3	·1214	·6646	. .	. .	. .	. .	J. H. Lefroy.
Station C, Swan River Barracks.	51 54	101 57	1880·44	78 34·5	. .	. .	. .	. .	. .	. .	W. F. King.
Port McLaughlin.	52 08	128 10	1881·60	73 12·1	·1745	·6040	. .	. .	. .	. .	H. E. Nichols.
Rose Harbor.	52 09	131 15	1881·72	72 30·2	·1791	·5957	. .	. .	. .	. .	"
Lake Winnipeg.	52 21	97 10	1844·70	80 24·4	·1107	·6638	. .	. .	. .	. .	J. H. Lefroy.
Elbow.	52 21	107 23	1844·65	78 16·6	·1319	·6496	. .	. .	. .	. .	"
Lake Winnipeg.	52 23	97 12	1843·52	80 39·2	·1059	·6524	. .	. .	. .	. .	"
" "	52 32	97 18	1843·52	80 05·5	·1121	·6513	. .	. .	. .	. .	"
Fort Alexandria.	52 33	122 29	1833·4	74 50	·1561	·5985	. .	. .	. .	. .	D. Douglas.
Station e, Battleford.	52 43	108 17	1880·83	77 49·4	. .	. .	. .	. .	. .	. .	W. F. King.
Carlton House.	52 51	106 32	1844·65	78 30·7	·1265	·6355	. .	. .	. .	. .	J. H. Lefroy.
Willow Hills.	53 00	108 30	1844·64	78 28·1	·1313	·6567	. .	. .	. .	. .	"
Station a, Pipestone Cr.	53 04	113 35	1880·73	77 00·2	. .	. .	. .	. .	. .	. .	W. F. King.
Grand Rapids.	53 08	99 27	1884·55	80 24·9	·1083	·6503	. .	. .	. .	. .	O. J. Klotz.
Cross Lake.	53 11	99 34	1843·63	80 28·2	·1081	·6531	. .	. .	. .	. .	J. H. Lefroy.
Hare Island.	53 13	100 00	1843·63	80 07·1	·1113	·6484	. .	. .	. .	. .	"
Near fork of Saskatchewan.	53 13	104 52	1884·38	78 59·3	·1231	·6444	. .	. .	. .	. .	O. J. Klotz.
Devils Drum Island.	53 19	100 36	1843·67	80 00·0	·1106	·6370	. .	. .	. .	. .	J. H. Lefroy.
Lake Winnipeg.	53 32	99 12	1843·62	80 22·2	·1087	·6500	. .	. .	. .	. .	"
Fort Edmonton.	53 32	113 30	1844·63	77 54·2	·1357	·6455	. .	. .	. .	. .	"
Station b, near Fort Edmonton.	53 32	113 30	1880·76	77 30·5	. .	. .	. .	. .	. .	. .	W. F. King.
Fort Pitt.	53 34	109 47	1844·64	78 41·0	·1281	·6526	. .	. .	. .	. .	J. H. Lefroy.
Station d, Battleford.	53 36	111 24	1880·79	77 56·8	. .	. .	. .	. .	. .	. .	W. F. King.
Norway House, old site.	53 42	98 01	1843·61	80 45·4	·1049	·6530	. .	. .	. .	. .	J. H. Lefroy.
Above the Pass.	53 49	101 23	1843·66	80 24·4	·1100	·6603	. .	. .	. .	. .	"
Moose Hill.	53 50	110 59	1844·64	78 33·5	·1263	·6368	. .	. .	. .	. .	"
Cumberland House.	53 57	102 19	1884·46	80 25·6	·1077	·6474	. .	. .	. .	. .	O. J. Klotz.
Norway House, new position.	54 00	98 04	1884·65	81 12·8	·0990	·6484	. .	. .	. .	. .	"
Frazer Lake.	54 03	124 40	1833·5	75 48	·1484	·6059	. .	. .	. .	. .	D. Douglas.
Pembina River.	54 03	114 00	1844·5	77 54	. .	. .	. .	. .	. .	. .	J. H. Lefroy.
Saskatchewan River.	54 05	112 20	1844·63	78 05·2	·1304	·6319	. .	. .	. .	. .	"
Hairy Lake.	54 20	97 28	1843·59	81 20·9	·0976	·6486	. .	. .	. .	. .	"
Land Survey station.	54 21	114 00	1883·00	77 58·1	. .	. .	. .	. .	. .	. .	W. Ogilvie.
Fort Assiniboine	54 22	114 29	1844·61	78 15·2	. .	. .	. .	. .	. .	. .	J. H. Lefroy.
White Fall Portage.	54 23	96 31	1843·59	81 47·9	·0934	·6549	. .	. .	. .	. .	"
Limestone Point.	54 26	102 10	1843·65	80 34·2	·1060	·6470	. .	. .	. .	. .	"
Stuart Lake.	54 27	124 20	1833·5	76 09	·1457	·6091	. .	. .	. .	. .	D. Douglas.
Port Simpson.	54 34	130 26	1895·40	74 09·3	·1629	·5966	74 06	0·1633	0·5733	0·5961	O. B. French.
Hills Gates.	54 42	96 10	1843·59	81 57·0	·0916	·6543	. .	. .	. .	. .	J. H. Lefroy.
Carp Portage.	54 47	102 39	1843·65	80 39·6	. .	. .	. .	. .	. .	. .	"
Oxford House.	54 56	95 30	1843·59	82 38·8	·0838	·6544	. .	. .	. .	. .	"
Land Survey station.	55 10	114 03	1883·36	78 29·1	·1264	·6332	. .	. .	. .	. .	W. Ogilvie.
Observatory Inlet.	55 15	129 44	1793·5	75 54·5	. .	. .	. .	. .	. .	. .	G. Vancouver.
Fort a la Crosse.	55 27	107 54	1843·69	80 09·8	·1101	·6461	. .	. .	. .	. .	J. H. Lefroy.
Land Survey station.	55 32	116 09	1883·75	78 15·1	·1274	·6258	. .	. .	. .	. .	W. Ogilvie.
Fort Lesser Slave Lake.	55 33	116 00	1844·59	78 39·0	·1259	·6396	. .	. .	. .	. .	J. H. Lefroy.
Lion Point.	55 53	130 01	1895·40	75 25·1	·1522	·6045	75 22	0·1526	0·5844	0·6039	P. A. Welker.
Fort Dunvegan.	55 56	118 28	1844·56	78 46·2	·1256	·6455	. .	. .	. .	. .	J. H. Lefroy.
Land Survey station.	56 08	117 51	1883·73	78 17·2	·1274	·6277	. .	. .	. .	. .	W. Ogilvie.
York Factory.	57 00	92 26	1844·70	83 46·9	0·0696	0·6421	. .	. .	. .	. .	O. J. Klotz.

Collection of the most recent magnetic dips and intensities observed in the United States and referred to the epoch 1900·0—Continued.

BRITISH POSSESSIONS, NORTHWEST AMERICA (NORTH OF LATITUDE 51° AND WEST OF LONGITUDE 90° W.)—Continued.

Name of station.	Lat.	Long.	Date.	Dip θ.	Hor. force H.	Total force F.	θ_{1900}	H_{1900}	V_{1900}	F_{1900}	Observer.
	° ′	° ′		° ′			° ′				
Fort Vermilion or Fort Lefroy.	58 24	115 59	1844·53	80 48·0	0·1037	0·6465	. .	. .	. .	. .	J. H. Lefroy.
Fort Chipewyan.	58 43	111 19	1888·89	81 22·1	·0949	·6325	. .	. .	. .	. .	W. Ogilvie.
Fort Churchill.	58 44	94 14	1846·50	84 46·8	. .	. .	. .	. .	. .	. .	J. Rae.
Lake Lindeman.	59 47	135 05	1887·48	77 05·1	·1337	·5980	. .	. .	. .	. .	W. Ogilvie.
Marsh Lake.	60 21	134 17	1887·54	77 32·5	·1301	·6029	. .	. .	. .	. .	"
Canyon.	60 42	135 04	1887·56	77 43·9	·1262	·5941	. .	. .	. .	. .	"
Fort Resolution, Great Slave Lake.	61 10	113 46	1888·72	82 09·1	·0861	·6308	. .	. .	. .	. .	"
Fort Simpson.	61 52	121 25	1888·65	81 19·2	·0939	·6225	. .	. .	. .	. .	"
Lewes River.	62 04	136 04	1887·60	78 16·4	·1225	·6025	. .	. .	. .	. .	H. P. Dawson.
Fort Rae.	62 39	115 44	1883·2	82 54·1	·0766	·6199	. .	. .	. .	. .	W. Ogilvie.
Fort Selkirk.	62 48	137 25	1887·63	79 08·6	·1133	·6017	. .	. .	. .	. .	"
White River.	63 12	139 38	1887·64	78 19·4	·1209	·5971	. .	. .	. .	. .	"
Stewart River.	63 22	139 28	1887·65	78 36·6	·1178	·5963	. .	. .	. .	. .	"
Forty Mile River.	64 25	140 32	1887·69	78 46·2	·1157	·5941	. .	. .	. .	. .	"
McKenzie River.	64 27	125 03	1888·59	81 56·1	·0864	·6160	. .	. .	. .	. .	J. H. Lefroy.
Fort Norman.	64 41	124 45	1844·43	82 34·3	·0814	·6295	. .	. .	. .	. .	W. Ogilvie.
International Boundary, near.	64 41	140 54	1888·15	78 49·6	·1163	·5999	. .	. .	. .	. .	"
Norman.	64 54	125 43	1888·57	82 00·5	·0856	·6155	. .	. .	. .	. .	"
Porcupine River.	65 43	139 40	1888·38	79 54·8	·1050	·5997	. .	. .	. .	. .	"
Fort Good Hope, McKenzie River.	66 16	128 31	1888·53	82 18·4	·0819	·6116	. .	. .	. .	. .	J. Richardson.
Fort Confidence.	66 54	118 49	1849·15	84 51·0	·0557	·6271	. .	. .	. .	. .	W. Ogilvie.
La Pierre House.	67 23	. .	1888·43	81 24·7	·0895	·5993	. .	. .	. .	. .	"
Fort McPherson.	67 26	134 57	1888·47	81 48·9	0·0867	0·6089	. .	. .	. .	. .	J. Franklin.
Richardson Chain.	69 01	137 25	1826·5	82 22	. .	. .	. .	. .	. .	. .	"
Clarence Bay, Arctic Ocean.	69 38	140 51	1826·5	83 27	. .	. .	. .	. .	. .	. .	

EASTERN SIBERIA.

Petropavlovsk.	53 01	E 158 43	1837·68	64 05	0·2239	0·5123	64 23	. .	. .	. .	Du Petit Thouars.
"	53 01	E 158 43	1876·57	64 14	. .	. .					M. L. Onazevich.
Natschika.	53 07	E 157 25	1829·5	64 05	·2307	·5279	. .	. .	. .	. .	A. Erman.
Bering Island.	55 14	E 165 52	1879·6	66 35	·2093	·5267	. .	. .	. .	. .	A. Wijkander.
Plover Bay, Providence Harbor.	64 22	173 21	1880·65	74 46·4	·1504	·5727	. .	. .	. .	. .	W. H. Dall and M. Baker.
Ongayak.	64 24	172 20	1849·5	75 25	. .	. .	. .	. .	. .	. .	T. E. L. Moore.
Konyam Bay.	64 50	172 57	1879·6	75 10	·1473	·5754	. .	. .	. .	. .	A. Wijkander.
Holy Cross Bay.	65 28	178 32	1828·5	75 43	·1456	·5902	. .	. .	. .	. .	F. P. Lütke.
Yandangah.	65 29	170 50	1849·5	76 17	. .	. .	. .	. .	. .	. .	T. E. L. Moore.
Laurence.	65 32	171 40	1849·5	77 15	. .	. .	. .	. .	. .	. .	"
St. Laurence Bay.	65 35	170 44	1879·6	75 55	·1419	·5831	. .	. .	. .	. .	A. Wijkander.
Big Diomede Island.	65 45	169 04	1880·69	76 15·0	·1374	·5783	. .	. .	. .	. .	W. H. Dall and M. Baker.
Chagneen.	65 45	170 30	1849·5	76 56	. .	. .	. .	. .	. .	. .	T. E. L. Moore.
Pitlekai.	67 04	173 30	1878·9	77 00	·1325	·5890	. .	. .	. .	. .	A. Wijkander.
Ircaipi.	68 49	180 00	1878·7	77 56	0·1234	0·5903	. .	. .	. .	. .	"
Werkon River.	69 53	E 173 32	1823·5	79 59	. .	. .	. .	. .	. .	. .	F. v. Wrangell.
Wrangell Land, Rodgers Harbor.	70 57	178 10	1881·7	79 15	. .	. .	. .	. .	. .	. .	—— Putnam.
Wrangell Land, Hooper Cairn.	71 04	177 40	1881·62	79 52·5	. .	. .	. .	. .	. .	. .	C. L. Hooper.

UNITED STATES COAST AND GEODETIC SURVEY

W. W. Duffield Superintendent

ISOCLINIC CHART OF THE UNITED STATES FOR THE EPOCH JANUARY 1900

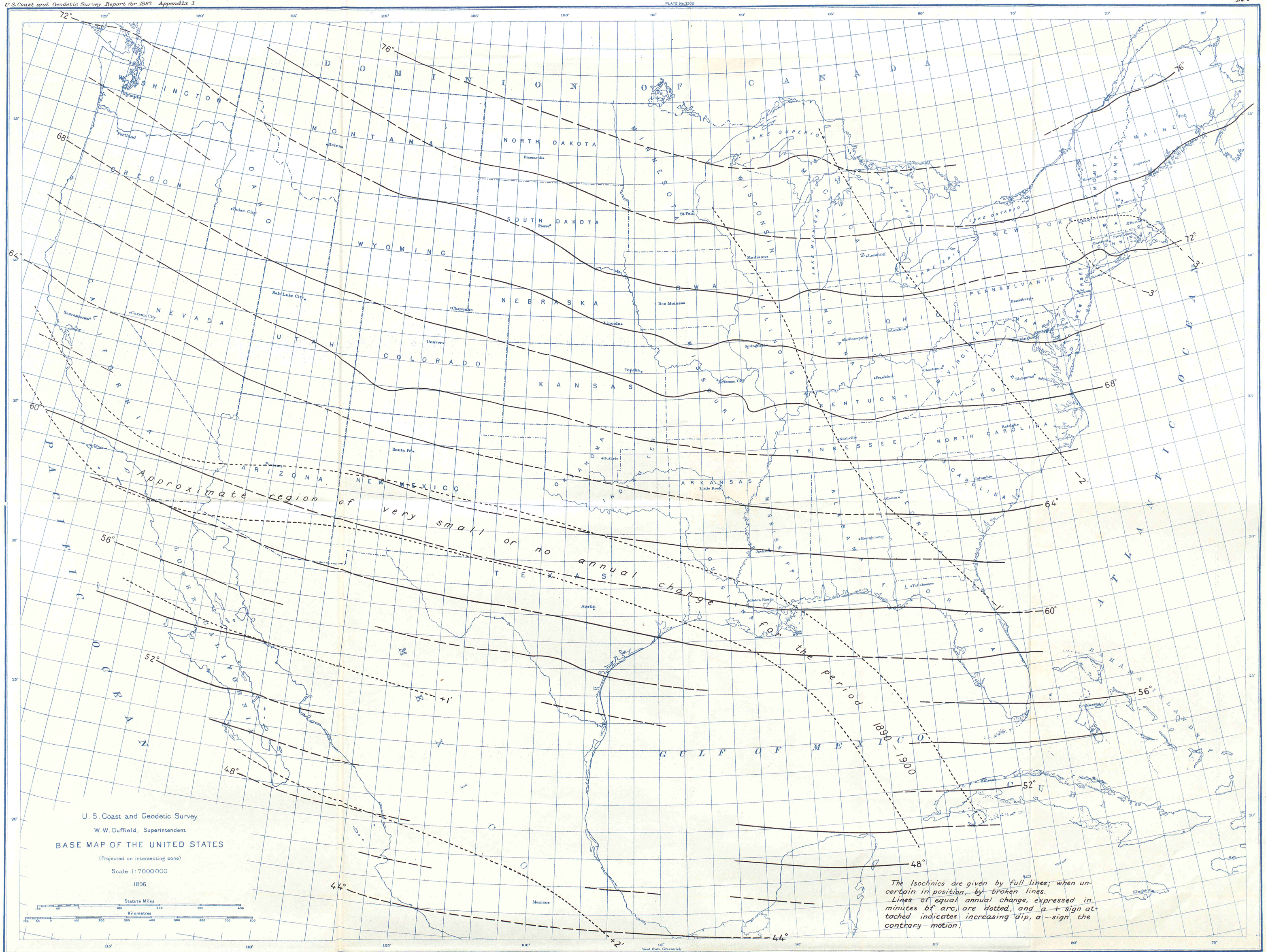

U. S. Coast and Geodetic Survey

W. W. Duffield, Superintendent

BASE MAP OF THE UNITED STATES

(Projected on intersecting cone)

Scale 1:7000000

1896

Statute Miles

Kilometres

The Isoclinics are given by full lines; when uncertain in position, by broken lines.

Lines of equal annual change, expressed in minutes of arc, are dotted, and a + sign attached indicates increasing dip, a − sign the contrary motion.

THE HORRIS PETERS CO., LITHO., WASHINGTON, D. C.

UNITED STATES COAST AND GEODETIC SURVEY

W. W. Duffield, Superintendent

ISODYNAMIC CHART OF HORIZONTAL COMPONENT OF THE MAGNETIC FORCE IN THE UNITED STATES FOR THE EPOCH JANUARY 1900

U. S. Coast and Geodetic Survey Report for 1897. Appendix 1

No. 2

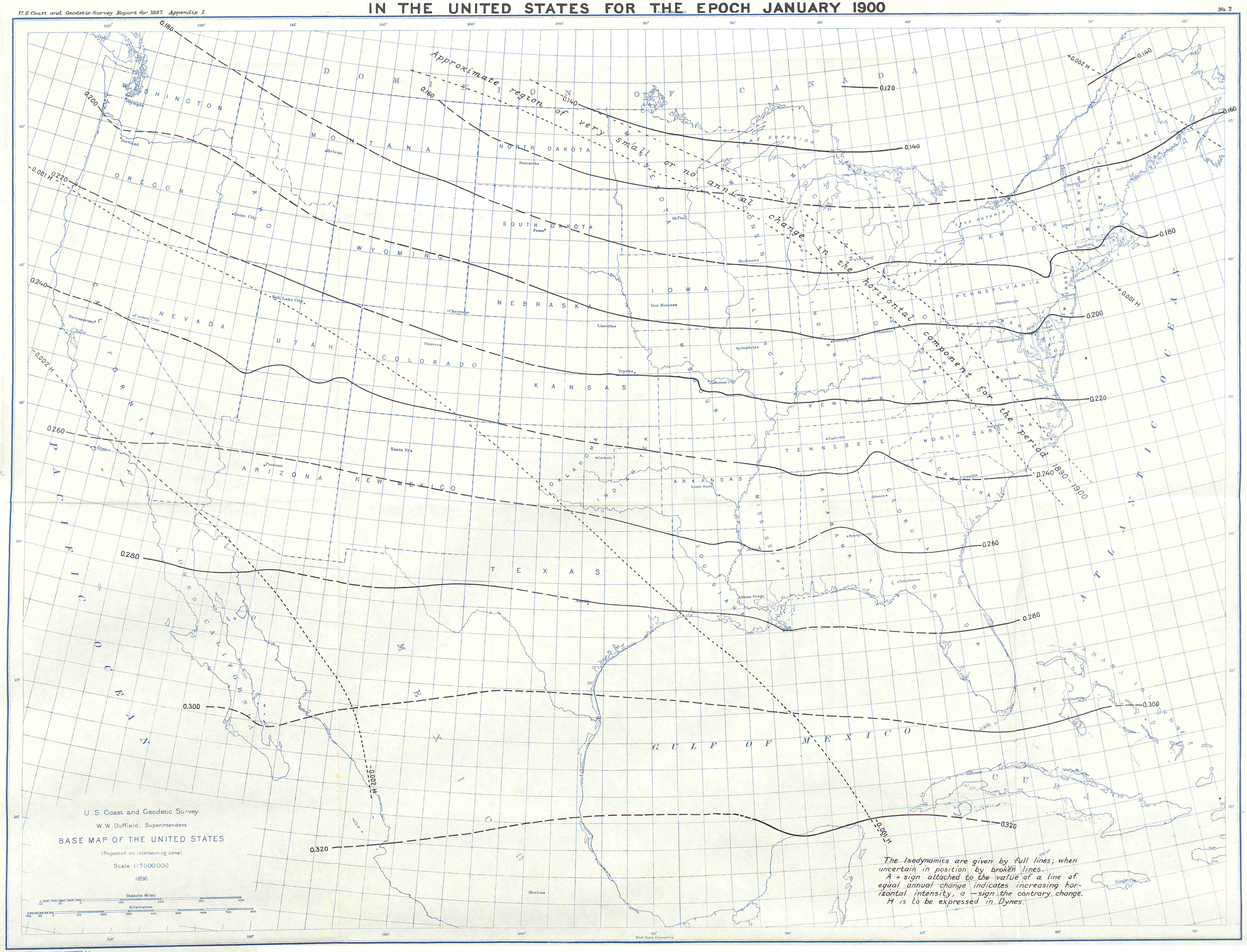

U. S. Coast and Geodetic Survey

W. W. Duffield, Superintendent

BASE MAP OF THE UNITED STATES

(Projected on intersecting cone)

Scale 1:7000000

1896

The Isodynamics are given by full lines; when uncertain in position by broken lines.
A + sign attached to the value of a line of equal annual change indicates increasing horizontal intensity, a − sign the contrary change.
H is to be expressed in Dynes.

THE NORRIS PETERS CO., LITHO., WASHINGTON, D. C.

UNITED STATES COAST AND GEODETIC SURVEY

W.W. Duffield Superintendent.

ISODYNAMIC CHART OF THE TOTAL MAGNETIC FORCE IN THE UNITED STATES FOR THE EPOCH JANUARY 1900

U. S. Coast and Geodetic Survey Report for 1897. Appendix No. 1.

No. 3

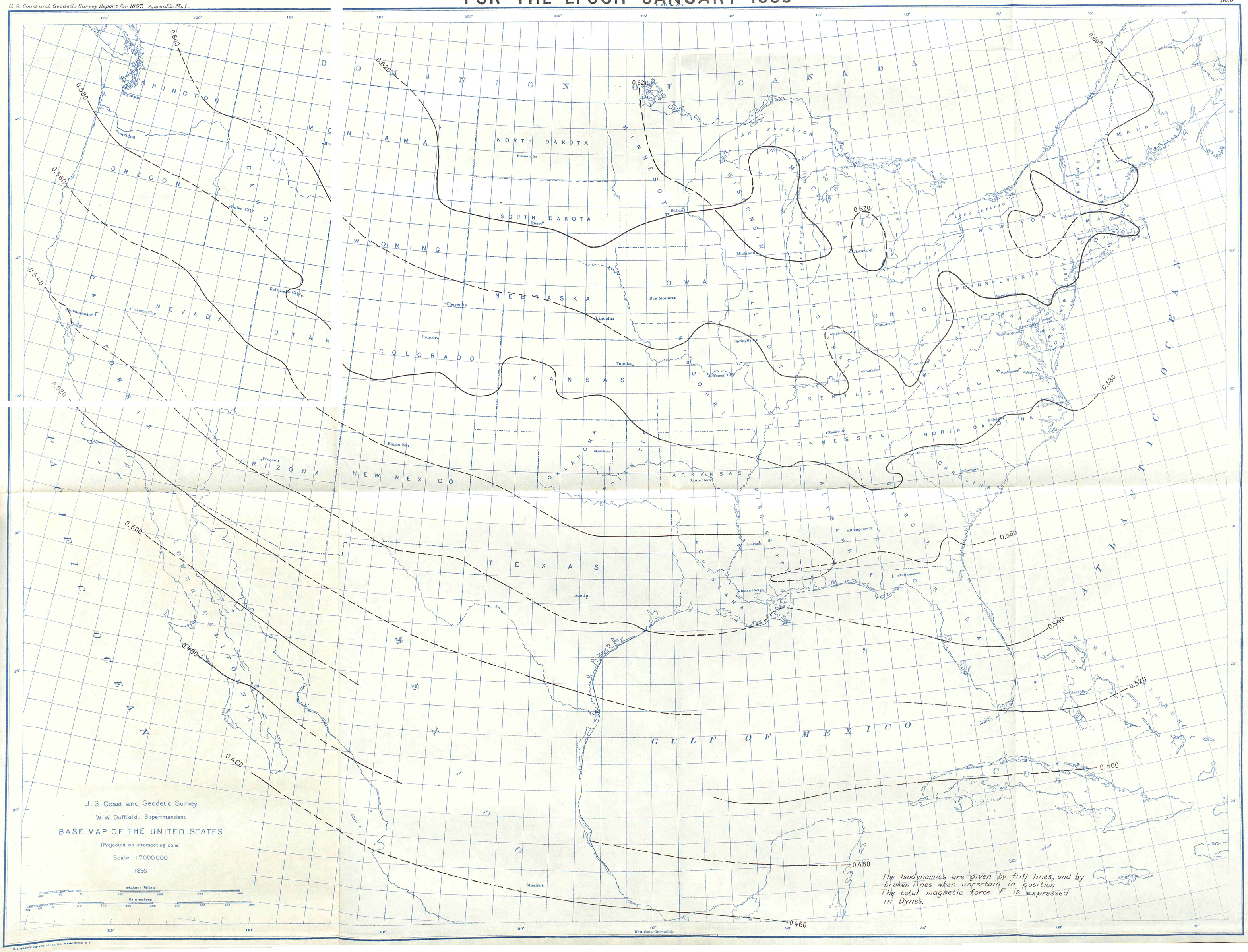

U. S. Coast and Geodetic Survey

W. W. Duffield, Superintendent

BASE MAP OF THE UNITED STATES

(Projected on intersecting cone)

Scale 1:7000000

1896

Statute Miles

Kilometres

The Isodynamics are given by full lines, and by broken lines when uncertain in position. The total magnetic force F is expressed in Dynes.

THE NORRIS PETERS CO., LITHO., WASHINGTON, D. C.

APPENDIX NO. 2—1897.

THE TELEGRAPHIC LONGITUDE NET OF THE UNITED STATES AND ITS CONNECTION WITH THAT OF EUROPE.

[WITH A MAP, SCALE 1:7,000,000.]

1866—1896.

Report by C. A. SCHOTT, Assistant.

Blank page retained for pagination

TABLE OF CONTENTS.

	Page.
Introduction and general remarks	201
Historical note	202
Field and office practice for the determination of telegraphic longitudes	203
The telegraphic longitude net of the United States	203
Abstract of individual results for difference of longitude	203
Exhibit of variation in personal equation between four observers and extending over a series of years	245
Effect of the variation in latitude upon the resulting differences of longitude	246
Adjustment of longitude net, method of reduction	246
Resulting longitudes, table of	254
Method and computation of probable errors of resulting longitudes	255
Remarks on junction of the North American and European systems of longitudes	256
References to additional prominent longitude stations	257

Blank page retained for pagination

APPENDIX NO. 2—1897.

THE TELEGRAPHIC LONGITUDE NET OF THE UNITED STATES AND ITS CONNECTION WITH THAT OF EUROPE, 1866-1896.

Report by C. A. SCHOTT, *Assistant.*

Introduction.—The gradual extension of the telegraphic longitude system may be said to have kept pace with the progress made in the development of the facilities of the country. Thus in the year 1884* the part sufficiently completed for adjustment had Omaha, Nebr., for its western limit, while at the present time the Pacific Coast is well supplied with longitude stations. Broadly speaking, there are three lines of wire connections across the country from ocean to ocean—one near the northern boundary, one centrally located, and one near the southern boundary. These lines are connected by ties involving intermediate stations, the whole forming what is well designated as a telegraphic longitude net. It will be the business of the computer to properly disperse in the results the small individual discrepancies which make their appearance in all fallible measures when confronted with the inherent mathematical conditions.

In each of the years 1866, 1870, and 1872 direct cable and wire connections were secured between Cambridge, Mass., and Greenwich, England. These three trans-Atlantic determinations for longitude, taking their start from the adopted initial meridian, proved to be in good accord† yet a fourth determination was desired in order to impart additional strength to this link of the prospective belting of the globe, mainly because the observers had not interchanged places during these operations so as to directly eliminate their personal equation. This fourth determination was opportunely supplied in 1892‡ when Canadian and English observers connected Montreal, Canada, and Greenwich with all desired accuracy.

If we examine any of the charts in the later annual reports of the Survey designed to illustrate the longitude results, we shall find more than two hundred determinations. These serve various purposes, such as furnishing the longitudes to the triangulations in all parts of the country, supplying similar information for special localities, such, for instance, as capitols of States and astronomic observatories, in order to improve their geographic positions—these observations also include the longitudinal subdivisions of the arc of the parallel in latitude 39°—but the main object for their existence was the evolution of a standard longitude net of a limited number of selected stations in order to give *consistency* and *accuracy* to all longitudes of surveys connected with this standard system.§ It is with the publication of the individual results and

* An earlier preliminary adjustment involved only coast stations as far as New Orleans (Rep. for 1880, App. No. 6).

† Appendix No. 11, Coast Survey Report for 1884, pp. 429, 430.

‡ The definite result has not yet been published (July, 1897), but was in part supplied through the kindness of Prof. C. H. McLeod, of McGill University, Montreal.

§ When the shores of the Atlantic had been united by the electric cable, the exchange of western and eastern times proved that the longitude hitherto adopted in the survey of our eastern coast, which rested upon moon culminations, eclipses, transits, occultations, and, last of all, on chronometer transportations, was considerably in error. In 1851 the adopted longitude of Harvard College Observatory, Cambridge, Mass., which served as the standard value, was $4^h\ 44^m\ 29^s{\cdot}50$ (see Coast Survey Report for 1851, p. 480; there is a misprint which makes the seconds 29.05), but the first cable determination gave the value $4^h\ 44^m\ 30^s{\cdot}85$, and later the adjusted value from three determinations made it $4^h\ 44^m\ 30^s{\cdot}99$ (Report for 1884, p. 423). In consequence, in April, 1869, the longitudes of the Survey on this coast were *increased* $1^s{\cdot}35$ or $20''{\cdot}25$, which in this latitude is not far from a third of a statute mile.

A similar increase of longitudes, or pushing westward of the coast line as represented on the older charts, was found necessary on our Pacific Coast, only there the amount of change was greater; from the earlier results of moon culminations the geodetic longitude of Telegraph Hill at San Francisco was taken as $8^h\ 09^m\ 33^s{\cdot}29$; a report made by the writer in March, 1855, gave the resulting longitude $8^h\ 09^m\ 34^s{\cdot}37$ depending on 206 moon-culminations observed at

the adjustment of the differences of longitude between the stations which compose this system that this paper is alone concerned.

Historical note.—It is not the intention, nor would it be the proper place, to introduce here any extended account of the history of the telegraphic longitude method from its inception to its present highly developed state, but, as in the previous publications of 1880 and 1884, a short notice of the development of the method while in the hands of the Coast (and Geodetic) Survey is both desirable and necessary for the proper understanding of the results and their probable errors reached at different epochs since 1845.

When, in May, 1844, Morse flashed his first telegraphic messages over the wires between Washington and Baltimore, with a transmission time of his signals so short as to be barely perceptible, it is not to be wondered at that this time-annihilating device was sufficiently suggestive to the mind of an astronomer to foreshadow a new method for determining differences of longitude by its means. The first notice by the Coast Survey pointing to such use I find in the Report for 1846, page 32, and in Appendix No. 11, page 72, where the instructions issued in the autumn of 1845 by Supt. A. D. Bache to Assistant S. C. Walker relative to the determination of geographic longitudes by means of the electric telegraph are given. In consequence of these instructions arrangements were made in the summer of 1846 to connect Washington with Jersey City (opposite New York) via Philadelphia, and on October 10 and 22, 1846, signals passed between the United States Naval Observatory at Washington and the Central High School Observatory at Philadelphia. The observers were Prof. S. C. Walker and Lieuts. M. F. Maury and J. J. Almy at the first place and Prof. E. O. Kendall at the second place. This was simply experimental, but in July and August, 1847, more complete apparatus having been procured the experiments were renewed with different observers at the terminals. The work was one of cooperation between the Superintendent of the Naval Observatory, Lieutenant Maury, and the Superintendent of the Coast Survey, Dr. Bache, while to Professor Walker was left the charge of the arrangement of the details of the operations. Professor Walker was connected with both governmental institutions between the years 1845* and 1847, and in his letter of November 10, 1847, inclosed in a communication by Dr. Bache of February 7, 1848, to the Astronomische Nachrichten, No. 632, we have given the most complete notice of the theory and practical value of the new method. Further information as to the state of the work is given in a second letter by Dr. Bache, in the Astronomische Nachrichten, No. 666, dated December 26, 1848. Under date of January 3, 1849, the Secretary of the Treasury communicated to the House of Representatives† a report from the Superintendent of the Coast Survey, setting forth and describing the new telegraphic method for the determination of longitudes. This report incloses two detailed statements by Assistant Walker, dated December 15, 1848. In these early days much attention was given to the determinations of wave and armature time and the personal equations, while to the mechanical details of automatic registration and to clock break-circuit devices, as well as to the purely astronomical part of the operation, due attention was paid. For this and kindred matter the annual reports may be consulted.

A more popular account of the new method given by Walker about this time will be found in Littell's Living Age, Vol. XV, Boston, October, 1847. This article is copied from the Washington newspaper Union. On the part of the United States Naval Observatory see Washington Astronomical Observations During the Year 1846, Vol. II, 1851, Appendix page [5], where Lieutenant Maury, in a letter to Dr. Locke, dated January 5, 1849, gives credit for the suggestion of using the electric telegraph for longitude determination to Captain Wilkes, U. S. N. This was on the occasion of the opening of the Baltimore line in 1844. See also Washington Astronomical and Meteorological Observations of 1871, Appendix IV, "Memoir of the founding and progress of the United States Naval Observatory" by Prof. J. E. Nourse, U. S. N.

---

seven different places and reduced to the station by means of chronometer transportations; but in the spring of 1869 San Francisco and Cambridge were directly connected by wire with a resulting difference of longitude $3^h\,25^m\,07^s\cdot37$ which when referred to Telegraph Hill makes its longitude $8^h\,09^m\,37^s\cdot46$, or $122^\circ\,24'\,21''\cdot95$, which exceeds the 1855 result by $3^s\cdot1$ nearly, or about $46''\cdot5$, which in the latitude of San Francisco amounts to almost three-quarters of a mile; thus the country was considerably wider than had been known before the advent of the telegraphic method.

* Possibly even as early as 1844. He continued Assistant in the Survey over seven years, to the close of the year 1852, when ill health compelled him to retire. Professor Walker died in February, 1853.

† Ex. Doc. No. 21, Thirtieth Congress, second session.

After the retirement of Professor Walker, in 1852, Dr. B. A. Gould, Assistant in the Survey, was called upon by the Superintendent to take charge of the longitude work, which remained in his able hands till 1867, when he tendered his resignation. The progress made during this interval may be read in the respective annual reports of the Survey, but his most important contribution is contained in the Report for 1867, Appendix No. 6, pages 57–133, "On the longitude between America and Europe from signals through the Atlantic cable." The peculiarities of cable work are here set forth in great detail, and Dr. Gould also contrasts the older astronomic with the new telegraphic result.* Assistant George W. Dean succeeded Dr. Gould, and under the immediate direction of the Superintendent had charge of the longitudes between 1867 and 1874, but after the expiration of the last-named year no special appointment for conducting this work was made, doubtless, as it was felt that it had then become in a great measure one of mere routine. The results heretofore obtained were found to lack consistency of treatment, and in September, 1878, the computing division of the Survey was directed to take charge of the computations and submit reports in connection with the development of the scheme. As a first fruit we have given in Appendix No. 6, Report for 1880, a summary of results of 80 determinations between principal stations and of 47 subordinate ones, which is followed by an adjustment (method of least squares) of the longitudes of 25 stations connected by 34 determinations of differences of longitude between them.†

Present field and office practice.—A full exposition of the method of longitude determinations, as practiced about the year 1880, will be found in Appendix No. 14 of the report for that year. Part II of that paper is illustrated with two plates showing arrangement of the several telegraph instruments and their connections, also of the chronograph by Fauth & Co. Since that time the sending of chronometer signals and the galvanometer tests of the circuits has been discontinued, thus considerably simplifying the exchange of signals without detriment to the accuracy of the chronometer comparison. About three dozen arbitrary break signals, sent and received, at each station, constitute an exchange during which the chronographs are run at double speed. The whole time required is but a few minutes. The method followed both in the field and in the office or by the observer and computer, and the one in use substantially at the present time, is described and illustrated in two appendices in the annual report for 1889, viz, No. 8, "Telegraphic determination of the longitude of a station on Mount Hamilton, California, etc., and No. 9, "Description of two new portable transit instruments for longitude work." These instruments were constructed at the Survey Office by E. G. Fischer, chief mechanician, from designs by Assistant Edwin Smith. The more modern work depends entirely on these excellent instruments. The establishment of a strong longitude net embracing the whole country was steadily kept in view.

The longitude net.—The general plan of the composition of the net and its connection with the initial longitude station in Europe have already been referred to above. In the selection of the links only those were admitted in the scheme in which the personal equation had been eliminated through the interchange of places of the observers. There are a few exceptions to this, in which cases, however, the personal equation was ascertained by direct or indirect comparisons.

A few, but important, links were introduced which rest on other than coast and geodetic authority, viz, the connection Cambridge and Detroit, by the United States Lake Survey; the connection Cambridge and Montreal, by the respective directors of the observatories, and the new cable connection of the Montreal and Greenwich observatories. The links and meshes of the net are shown on the accompanying map (scale, 1–10 000 000). Key West, Fla., was introduced to provide for Central and South American cable connections; Galveston and El Paso, Tex., to connect with Mexican lines and cables to the west coasts of Central and South America, while any future Pacific cables are within easy reach of the system. The net contains 45 stations with 72 links; with this were afterwards connected 3 secondary stations with 4 links.

Abstracts of results.—In what follows the individual nightly values for difference of longitude between any two stations are presented, together with the resulting weighted mean result and its probable error; also other pertinent information respecting dates, observers, instruments, trans-

*Of the two cable longitudes subsequent to that of 1866 a full account is given by Assistant J. E. Hilgard in Appendix No. 18, Report for 1874, pp. 163–242.

†For second adjustment see Appendix No. 11, Report for 1884.

mission time, description of stations, reference marks, etc. The abstracts are given in tabular form and are sufficiently self-explanatory. In accordance with general regulations two computations of each longitude determination are made; one by the observer, the other by the office computer under the direction of the chief of the computing division. All longitude computations since 1893 were made by Mr. D. L. Hazard, of this division, who has also reviewed or revised the older office reductions.

As has been shown in Appendix No. 8, Report for 1889, the combination weights ρ, assigned to the values of $\Delta\lambda$ of a longitude determination, depend in the first place on the probable errors of the two sets of time determinations at each station;* next on the resulting probable errors of the chronometer corrections at the time of exchanges; and lastly on the combination of the latter values as found at the two stations. The difference between the indiscriminate and the weighted mean is small, generally less than $0^s.01$. The places of stars are taken from the Berlin Jahrbuch and supplemented by the American Ephemeris and Nautical Almanac, but corrected when indicated by the time observations.

In the abstracts the personal equations are set down as they are needed or given by the longitude results themselves before and after interchange of observers. To obtain their equatorial values they would have to be multiplied by the cosines of the stars' declinations. No attempt is here made toward a discussion of personal equations beyond the tabular collection of certain comparative results; nor is there any discussion of the time of transmission or of wave, armature, and relay time, for the reason that in most cases precise data are wanting, such as material, size and length of line wire, and presence or absence of repeaters.

The abstracts of the differences of longitudes are presented in chronologic order, and of the two stations of each measure the *western* one is always named first, and since west longitudes are taken as positive, the differences of longitudes are all of positive sign.

ABSTRACT OF RESULTS FOR DIFFERENCES OF LONGITUDE BETWEEN STATIONS COMPOSING THE TELEGRAPHIC LONGITUDE NET OF THE UNITED STATES, 1866-1896.

[First cable connection with Europe.]

(1) to (3) DIFFERENCE OF LONGITUDE BETWEEN CALAIS, ME., AND GREENWICH, ENGLAND,† VIA HEART'S CONTENT, TRINITY BAY, NEWFOUNDLAND, AND FOILHOMMERUM, VALENCIA ISLAND, IRELAND.

The whole work was in charge of Dr. B. A. Gould.

Date.	Western end of line at—	Eastern end of line at—	Transits at—		Observers at—	
			West end.	East end.	West end.	East end.
(1) 1866, October and November.	Heart's Content.	Foilhommerum.	Tr. No. 6 and	Tr. No. 4.	G. W. Dean.	B. A. Gould and A. T. Mosman.
(2) 1866, November.	Foilhommerum.	Greenwich.	Tr. No. 4 "	Tr. Circle.	B. A. Gould and A. T. Mosman.	Various observers.
(3) " December.	Calais.	Heart's Content.	Tr. No. 8 "	Tr. No. 6.	C. O. Boutelle and S. C. Chandler.	E. Goodfellow.

*The transit instruments were not very different in construction and optical power. With the exception of Nos. 18 and 19, which were constructed at the Survey instrument shop in 1887-88, they were made by Simms, of London, between 1848 and 1852. Nos. 3, 4, 6, 8 have an aperture of 7 cm., a focal length of 115 cm. with a magnifying power approximating 100. Transit No. 5 appears to have been somewhat smaller. With the introduction of Nos. 18 and 19 a marked improvement in the results became apparent.

†For detail account see Coast Survey Report for 1867, Appendix No. 6, pp. 57-133, by Dr. B. A. Gould. This report was also printed by the Smithsonian Institution, see "Contributions to Knowledge" No. 223, Vol. XVI, 1869; see also American Journal of Science, n. s., Vol. XLIX, 1870, p. 228. For remarks of a general nature bearing on the earliest cable longitude work see Coast Survey Report for 1866, part 2, p. 9. In the discussion of later transatlantic determination in the Report of 1872, Appendix No. 13, and the Report of 1874, Appendix No. 18, the results of the determination of 1866 are again referred to. See also Coast and Geodetic Survey Report for 1884, p. 410.

No interchange of observers during the longitude work took place. The part taken by Assistant George Davidson (placing the land line between Calais and Newfoundland in proper working order) is described elsewhere in the detailed account.

(1) DIFFERENCE OF LONGITUDE BETWEEN HEART'S CONTENT AND FOILHOMMERUM.

Date.	Western observer.	Eastern observer.	Difference of longitude.	Reduction to M. Observer.	Seconds of $\Delta\lambda$	Remarks. Connection through cable of 1865, length 3 518 kilometres, or 2 186 English miles; through cable of 1866, length 3 434 kilometres, or 2 134 English miles.	Transmission time.
1866.			*h. m. s.*	*s.*	*s.*		*s.*
Oct. 25	G. W. Dean.	G	2 51 56·43	−0·02	56·45	Cable of 1865, earth and condenser.	0·314
28		G	·44	+0·02	·46	" " " " " "	·343
Nov. 5		M	·44		·44	Cables of 1865 and 1866 joined, no earth.	·280
6		M	·42		·42	" " " " " " " "	·248
9		M	·44		·44	" " " " " " " "	·240
		Mean	2 51		56·442	±0ˢ·005 Mean	0·285

Comparison for personal equation between Dean and Mosman, made April 19 and April 23, 1867, give the result $D-M=+0^{s}\cdot11\pm0^{s}\cdot02$ and the comparisons for noting the motion of the spot of light* gave from the Valencia observations for M and G the value $0^{s}\cdot271\pm0^{s}\cdot004$, and from the Newfoundland observations for D the value $0^{s}\cdot335\pm0^{s}\cdot005$, hence correction to $\triangle\lambda$ for difference in perceiving cable signals $\frac{1}{2}(0\cdot335-0\cdot271)=+0^{s}\cdot032\pm0^{s}\cdot005$ and $\triangle\lambda=2^{h}\ 51^{m}\ 56^{s}\cdot442-0^{s}\cdot110+0^{s}\cdot032$.

$\Delta\lambda$, Heart's Content (T_{1866}) — Foilhommerum (T) $=2^{h}\ 51^{m}\ 56^{s}\cdot364\pm0^{s}\cdot029$.

(2) DIFFERENCE OF LONGITUDE BETWEEN FOILHOMMERUM AND GREENWICH.†

Date.	Observers.	Difference of longitude.	Number of— Foilhommerum or western signals.	Number of— Greenwich or eastern signals.	Length of cable (across channel from Ireland to Wales and Straits of Valencia) and land lines.	Transmission time.
1866.		*h. m. s.*				*s.*
Nov. 5	Various.	0 41 33·305	210	66	1 064 kilometres.	0·115
13	"	33·280	70	80		0·110
	Mean	0 41 33·29 ± 0ˢ·03 (estimated).				

In the report for 1872 Assistant J. E. Hilgard‡ estimated the correction to this value for personal equation between Mosman and Dunkin through intermediate comparisons involving observers Criswick and Blake to be about $+0^{s}\cdot05$ to which may be assigned an uncertainty equal to itself.

Resulting $\Delta\lambda$, Foilhommerum (T) — Greenwich (T. C.) $=41^{m}\ 33^{s}\cdot34\pm0^{s}\cdot06$.

* Signals were received by Thomson's mirror and needle galvanometer. The two cables are known as the English cables.

† In consequence of the weakness of this determination, a new transatlantic measure was contemplated, but this became unnecessary through the timely work by Canadian and English observers in the year 1892, when Montreal was connected with Greenwich, thus securing a fourth connection between the American and European longitudes.

‡ United States Coast Survey Report for 1872, Appendix No. 13, p. 234.

(3) DIFFERENCE OF LONGITUDE BETWEEN CALAIS AND HEART'S CONTENT.*

Date.	Observers at— C.	Observers at— H. C.	Difference of longitude.	Reduction to B.	Seconds of $\Delta\lambda$.	Length of land wire and cable connections 1 754 kilometres, or 1 090 statute miles. There were 3 repeaters in line.	Transmission time.
1866.			*h. m. s.*	*s.*			*s.*
Dec. 11	Chandler.	E. Goodfellow.	0 55 37·89	—0·04	37·85		0·24
12	Boutelle.		[37·53]	rejected on account of clock rate.			0·31
14	Boutelle.		37·89		37·89		0·27
16	Chandler.		37·78	—0.04	37·74	W = ¼	0·28
		Mean.	0 55		37·86 ± 0·02		

*See note 2 on preceding page.

The expression for the personal equation $B. - C. = -0^s.04$ was supposed by the observers to be the best representation, though observations made in April, 1867, gave $B. - C. = 0^s.15$; an estimated probable error of $\pm\ 0^s.05$ is assigned to the value. For personal equation $B. - C. = -0^s.14 \pm 0^s.02$.

Resulting $\Delta\lambda$, Calais (T_{1866}) — Heart's Content (T_{1866}) $= 55^m\ 37^s.86 + 0^s.14$
$= 55\ \ 38\ .00 \pm 0^s.06$.

(4) DIFFERENCE OF LONGITUDE BETWEEN SALT LAKE CITY, UTAH, AND OMAHA, NEBR.

Date.	Observer at— S. L.	Observer at— O.	From western or Salt Lake City signals.	From eastern or Omaha signals.	W—E	Mean of W. and E. signals.	Corr'n for personal equation.	Difference of longitude $\Delta\lambda$	*p.*	*v.*
1869.			*h. m. s.*	*h. m. s.*	*s.*	*h. m. s.*	*s.*	*h. m. s.*		*s.*
Feb. 9	G. W. Dean.	E. Goodfellow.	1 03 49·359	1 03 49·128	0·231	1 03 49·243	+0·032	1 03 49·275	1	+ ·162
14			·155	48·917	·238	49·036	±0·005	·068	1	— ·045
15			·122	48·846	·276	48·984		·016	1	— ·097
17			·180	48·929	·251	49·055		·087	1	— ·026
18			·308	49·035	·273	·171		·203	1	+ ·090
22			·253	48·970	·283	·112		·144	1	+ ·031
24			·218	48·989	·229	·104		·136	1	+ ·023
25			·217	48·921	·296	·069		·101	1	— ·012
26			·213	48·945	·268	·079		·111	1	— ·002
27			·152	48·911	·241	·031		·063	1	— ·050
28			·145	48·872	·273	·009		·041	1	— ·072
				Mean	0·260	1 03 49·081 ±0·015		1 03 49·113		
				Weighted mean				1 03 49·113	±0ˢ·015 ±0 ·005	

Transmission time $0^s.130 \pm 0^s.002$.

Personal equation adopted D.—G. $= -0^s.032 \pm 0^s.005$; it is derived from the following observations, resulting from direct comparisons, viz:

April 9, 11, 1867, at Cambridge, D.—G. $= -0^s.011 \pm 0^s.020$
July 1, 1867, at Washington, " $= -0^s.025 \pm 0^s.010$
March 19, 1868, at New Orleans, " $= -0^s.046 \pm 0^s.013$
May 13, 17, 18, 1870, at Cambridge, " $= -0^s.033 \pm 0^s.012$
} Mean—$0^s.032 \pm 0^s.005$.

At Salt Lake City transit No. 4 was mounted over the station selected by Assistant G. W. Dean in January, 1869, in the southeastern part of Temple Block.

At Omaha transit No. 6 was placed over the new station in the grounds of the Capitol, afterwards known as the High School grounds.

$\Delta\lambda$, Salt Lake City ($T_{1869-90}$)—Omaha ($T_{1869-91}$) $= 1^h\ 03^m\ 49^s.113 \pm 0^s.016$.

(5) DIFFERENCE OF LONGITUDE BETWEEN CAMBRIDGE, MASS., AND DUXBURY, MASS.[a]

Date.	Observer at— C.	Observer at— D.	From western or Cambridge signals.	From eastern or Duxbury signals.	W—E	Mean of W. and E. signals.	Correction for personal equation.	Difference of longitude $\Delta\lambda$	p.	v.
1869-'70.	E. P. Austin.	E. Goodfellow.	s.	s.	s.	s.	s.	s.	Equal weights.	s.
Dec. 14			110·381	110·294	0·087	110·337	—0·145	110·192		—0·038
15			·385	·334	·051	·360	± ·007	·215		— ·015
23			·525	·456	·069	·490		·345		+ ·115
31			·440	·407	·033	·423		·278		+ ·048
Jan. 3			·296	·263	·033	·280		·135		— ·095
26			·284	·274	·010	·279		·134		— ·096
28			·338	·325	·013	·331		·186		— ·044
Feb. 10			·502	·490	·012	·496		·351		+ ·121
						Mean		110·230		
						Weighted mean		110·230 ± 0s·021 ± 0 ·007		

[a] For result by Prof. J. Lovering see Memoirs of the American Academy, Cambridge, January, 1873, Vol. IX, Art. XVI, "On the determination of transatlantic longitudes by means of the telegraphic cables." See also Coast and Geodetic Survey Report for 1884, p. 412.

Transmission time $=0^s{\cdot}019$ (average). Length of connecting wire 71 km. or 44 statute miles.

The personal equation is derived from direct comparisons made at Cambridge in May, 1870, whence $A-G=+\ 0^s{\cdot}145\pm0^s{\cdot}007$.

At Cambridge transit No. 5 was mounted in the grounds of Harvard College Observatory 13·41 metres or $0^s{\cdot}039$ west of the center of the dome.

At Duxbury transit No. 6 was mounted at a station 269 metres ENE. from the cable office.

$\Delta\lambda$, Cambridge (D)—Duxbury (T_{1869})$=1^m\ 50^s{\cdot}191\pm0^s{\cdot}022$.

[Second cable connection with Europe.[a]]

(6) DIFFERENCE OF LONGITUDE BETWEEN DUXBURY, MASS., AND BREST, FRANCE, VIA ST. PIERRE.

Date.	Western end of line.	Eastern end of line.	Transits at— W. station.	Transits at— E. station.	Observers at— Duxbury.	Observers at— Brest.
1870. Jan. and Feb.	Duxbury	Brest	Tr. No. 6	Tr. No. 4	E. Goodfellow	G. W. Dean

[a] The cable is known as the French cable of 1869.

No interchange of observers took place. The signals passed through the two cables joined at St. Pierre. For details see reports by Assistant J. E. Hilgard in the annual reports of 1872 and 1874.* The Duxbury station was established in November, 1869, about 269 metres ENE. from the cable office.

* Annual report for 1872, Appendix No. 13, and annual report for 1874, Appendix No. 18; see also Memoirs of the American Academy, Cambridge, January, 1873, Vol. IX, Art. XVI, "On the determination of trans-Atlantic longitudes by means of the telegraphic cables," by J. Lovering.

DIFFERENCE OF LONGITUDE BETWEEN DUXBURY AND BREST.

Date.	Time observations same night.	From signals of Class II.	From signals of Class III.	Mean value $\Delta\lambda$	Remarks.
1870.		*h. m. s.*	*h. m. s.*	*h. m. s.*	
Jan. 5		.....	4 24 42·746	4 24 42·746	
8		4 24 42·893	42·879	42·886	Signals of Class II have a duration of half a second, and the observer notes the time when the spot of light *begins* to move *from* the center. Signals of Class III are alternate of + & − current, of 5 seconds' duration, the light moving *toward* the center. *From signals of 10ˢ duration.
9		42·895	42·858	42·876	
10	T at Brest only	42·515	42·498	42·506	
17	T at Brest only	42·892	42·977	42·935	
22		42·853	43·016	42·935	
24	T at Brest only	43·038	43·148	43·093	
26		43·101	43·188	43·144	
28		43·152	43·276	43·214	
Feb. 9	T at Brest only	43·105	43·068	43·086	
10		42·645	*42·663	42·654	

	h. m. s.	*s.*	
Mean of 7 nights, transits at both ends	4 24 42·922	± 0.051	Length of cable Duxbury to St. Pierre 1 389 km. (863 st. miles); St. Pierre to Brest 4 781 km. (2 971 st. miles). Transmission time Duxbury to St. Pierre 0ˢ·14; St. Pierre to Brest 0ˢ·36.
" " 4 " " " Brest only	42·905	± 0·093	
Weighted mean, results of 11 nights	42·918	± 0·045	
Correction for personal equation	−0·033	± 0·012	
Correction for difference of noting signals	−0·018	± 0·006	
(*a*) Resulting $\Delta\lambda$ Duxbury (T) — Brest (T)	4 24 42·867	± 0·047	
Reduction to the tower of St. Louis at Brest	+0·409		
$\Delta\lambda$, Duxbury (T.) — Brest (To. of St. Louis)	4 24 43·276	± 0·047	

(*a*) Coast Survey Report for 1874, p. 180, and Coast and Geodetic Survey Report for 1884, p. 412.

[Third cable connection with Europe.]

(7 TO 11) DIFFERENCE OF LONGITUDE BETWEEN CAMBRIDGE, MASS., AND GREENWICH, ENGLAND, VIA CAPE BRETON, ST. PIERRE, BREST AND PARIS, FRANCE.

The eastern part of the work was in charge of Assistant J. E. Hilgard, the western part in charge of Assistant G. W. Dean. The work at Greenwich was supported by the astronomer royal, Mr. Airy, and at Paris by the director, Mr. Loewy.

Designation.	Date.	Western end of line.	Eastern end of line.	Transits at—		Observers at—	
				W. station.	E. station.	West station.	East station.
(7)	1872. July 1 to 11	Brest	Greenwich	Tr. No. 4	Tr. Circle	F. Blake	Various observers referred to G. S. Criswick as standard
(8)	July 1 to 22	Brest	Paris	Tr. No. 4	Mer. Tel.	F. Blake	L. F. Folain and other observers
(9)	July 9 to 23	St. Pierre	Brest	Tr. No. 6	Tr. No. 4	E. Goodfellow	F. Blake
(10)	July 21 to Aug. 9	Cambridge	St. Pierre	Tr. No. 5	Tr. No. 6	E. Smith	E. Goodfellow
(11)	Aug. 28 to Sept. 10	Greenwich	Paris	Tr. No. 4	Mer. Tel.	F. Blake	L. F. Folain

No interchange of observers took place in any of these lines. For details of results see Coast Survey Report for 1872, Appendix No. 13,* and Report for 1874, Appendix No. 18.† The lengths of the electric conductors between the above stations, and the transmission times, are as follows:

	km. or statute miles			
			Transmission time	*s.* *s.*
Brest to Greenwich				0·037 ± 0·004
Brest to Paris				0·037 ± 0·003
St. Pierre to Brest	4 794	2 979		0·351 ± 0·003
Cambridge to St. Pierre	1 753	1 089		0·163 ± 0·004
Greenwich to Paris				0·070 ± 0·006

* Preliminary report on the determination of trans-Atlantic longitudes, by J. E. Hilgard, assistant, pp. 227–234.

† Transatlantic longitudes. Final report on the determination of 1872, with a review of previous determinations; by J. E. Hilgard, Assistant, pp. 163–242.

(7) DIFFERENCE OF LONGITUDE BETWEEN BREST, FRANCE, AND GREENWICH, ENGLAND.

Date.	Observer at— B.	Observer at— G.	From west or Brest signals.	From east or Greenwich signals.	W—E	Mean of W. and E. signals.	Correction for personal equation.	Difference of longitude Δλ	p.	v.
1872.			m. s.	m. s.	s.	m. s.	s.	m. s.		s.
July 1	F. Blake.	J. S. Criswick, standard observer.	17 57·194	17 57·097	0·097	17 57·146	−0·061 ±0·016	17 57·207	1	+0·053
3			·177	57·066	·111	·122		·183	1	+ ·029
4			·157	57·080	·077	·118		·179	1	+ ·025
5			·071	57·036	·035	·054	+0·061	·115	1	− ·039
11			·102	56·951	·051	·026		·087	1	− ·067
				Mean	0·74			17 57·154		
				Weighted mean				17 57·154 ±0s·015 ±0 ·016		

The reduction of the station at Brest to the tower of St. Louis is $+0^s{\cdot}444$, the transit being east of the tower; at Greenwich the station is coincident with the meridian of zero longitude.

$\Delta\lambda$, Brest (T. of St. L.) − Greenwich (Mer.) = $17^m\ 57^s{\cdot}598 \pm 0^s{\cdot}022$.

(8) DIFFERENCE OF LONGITUDE BETWEEN BREST, FRANCE, AND PARIS, FRANCE.

Date.	Observers at— B.	Observers at— P.	From western or Brest signals.	From eastern or Paris signals.	W—E	Mean of W. and E. signals.	Corr'n for personal equation.	Difference of longitude Δλ.	p.	v.
1872.			m. s.	m. s.	s.	m. s.		m. s.		s.
July 1	F. Blake.	L. F. Folain.	27 18·248	27 18·208	0·040	27 18·228	−0·041 ±0·034	27 18·187	Equal weights.	−0·022
3			·299	·236	·063	·268		·227		+ ·018
4			·209	·167	·042	·188		·147		− ·062
5			·365	·262	·103	·314		·273		+ ·064
9			·403	·318	·085	·360		·319		+ ·110
19			·230	·149	·081	·190		·149		− ·060
20			·363	·310	·053	·336		·295		+ ·086
21			·248	·165	·083	·206		·165		− ·044
22			·219	·106	·113	·162		·121		− ·088
				Mean	0·074	27 18·250		27 18·209		
				Weighted mean				18·209 ±0s·016 ±0s·034		

The reduction at Brest of the station to the tower of St. Louis is $+0^s{\cdot}444$, the transit being *east* of the tower; at Paris the meridian instrument of the observatory is $0^s{\cdot}12$ *east* of the meridian of France, which is also known as that of Cassini.*

$\Delta\lambda$†, Brest (T. of St. L.) − Paris (M. of F.) = $27^m\ 18^s{\cdot}533 \pm 0^s{\cdot}038$.

* Coast Survey Report for 1874, pp. 169–180.

† In 1863 the difference of longitude of the tower of St. Louis at Brest and the center of the Paris Observatory was determined telegraphically under the direction of Le Verrier, who found $27^m\ 18^s{\cdot}49$; see Annales de l'Observatoire de Paris, Vol. VIII, 1866, p. 279. The observers were Le Verrier, Folain, and Lepissier. No probable error is given. No use has been made here of that result.

(9) DIFFERENCE OF LONGITUDE BETWEEN ST. PIERRE ISLAND, MIQUELON GROUP, AND BREST, FRANCE.

Date.	Observer at— S. P.	Observer at— B.	From western or St. Pierre signals.	From eastern or Brest signals.	W—E	Mean of W. and E. signals.	Correction for personal equation.	Difference of longitude $\Delta\lambda$.	p.	v.
1872.			h. m. s.	h. m. s.	s.	h. m. s.		h. m. s.		s.
July 9	E. Goodfellow.	F. Blake.	3 26 45·665	3 26 44·415	1·250	3 26 45·040	+0s·015±0s·009	3 26 45·055	0·5	—0·189
12			·677	·464	·213	·071		·086	0·5	— ·158
14			·884	·660	·224	·272		·287	1	+ ·043
17			·884	·701	·183	·292		·307	1	+ ·063
18			·741	·583	·158	·162		·177	1	— ·067
21			·919	·736	·183	·327		·342	1	+ ·098
23			·860	·665	·195	·263		·278	1	+ ·034
				Mean	1·201	3 26 45·204		3 26 45·219		
				Weighted mean				3 26 45·244 ± 0s·025 ± 0 ·009		

For transmission time, 0s·351 ± 0s·003, see Coast Survey Report for 1874, pp. 173–174.

The value for personal equation is derived from numerous direct comparisons made at Cambridge, each observer using his own instrument and the same stars. The personal errors for noting cable signals were found for Blake observer 0s·238 ± 0s·004 and for Goodfellow observer 0s·259 ± 0s·002, hence correction to $\Delta\lambda$, $\frac{1}{2}$ (0·259 − 0·238) = + 0s·010 ± 0s·002.

Difference of longitude St. Pierre and Brest 3h 26m 45s·254 ± 0·027.
Reduction of transit at Brest to tower of St. Louis — 0·444.
$\Delta\lambda$, St. Pierre (T.) — Brest (T. of St. L.)* = 3h 26m 44s·810 ± 0·027.

(10) DIFFERENCE OF LONGITUDE BETWEEN CAMBRIDGE, MASS., AND ST. PIERRE ISLAND, MIQUELON GROUP.

Date.	Observer at— C.	Observer at— S. P.	From western or Cambridge signals.	From eastern or St. Pierre signals.	W—E	Mean of W. and E. signals.	Correction for personal equation.	Difference of longitude $\Delta\lambda$	p.	v.
1872.			m. s.	m. s.	s.	m. s.		m. s.		s.
July 21	E. Smith.	E. Goodfellow.	59 48·987	59 48·653	0·334	59 48·820	−0s·057±0s·011	59 48·763	0·5	+0·059
23			48·934	·651	·283	·792		·735	0·5	+ ·031
28			48·909	·567	·342	·738		·681	1	— ·023
29			48·894	·604	·290	·749		·692	1	— ·012
Aug. 1			49·010	·657	·353	·833		·776	1	+ ·072
6			48·800	·475	·325	·637		·580	1	— ·124
9			48·982	·628	·354	·805		·748	1	+ ·044
				Mean	0·326	59 48·768	±0s·018	59 48·711		
				Weighted mean				59 48·704 ± 0s·018 ± 0s·011		

The personal equation was derived from numerous comparisons made in October and November, 1872, at Cambridge, whence G. − S. = − 0s·057 ± 0s·011.

At Cambridge the transit was mounted *west* of the center of the dome 32·92 metres, or 0s·096.

$\Delta\lambda$, Cambridge (D) — St. Pierre (T)† = 59m 48s·608 ± 0s·021.

* Coast Survey Report for 1874, p. 172, and Coast and Geodetic Survey Report for 1884, p. 413.
† Coast and Geodetic Survey Report for 1884, p. 413.

(11) DIFFERENCE OF LONGITUDE BETWEEN GREENWICH, ENGLAND, AND PARIS, FRANCE.[a]

Date.	Observer at— G.	Observer at— P.	From western or Greenwich signals.	From eastern or Paris signals.	W—E	Mean of W. and E. signals.	Corr'n for personal equation.	Difference of longitude Δλ	p.	v.
1872.			m. s.	m. s.	s.	m. s.		m. s.		s.
Aug. 28	F. Blake.	L. F. Folain.	9 21·113	9 20·934	0·179	9 21·024	−0s·041	9 20·983	1	+0·023
31			·064	20·895	·169	20·980	+0s·034	20·939	1	— ·021
Sept. 7			·125	21·007	·118	21·066		21·025	1	+ ·065
9			·006	20·852	·154	20·929		20·888	1	— ·072
10			·043	20·965	·078	21·004		20·963	1	+ ·003
				Mean	0·140	9 21·001	±0s·016	9 20·960		
				Weighted mean				9 20·960 ± 0s·016 ± 0s·034		

[a] Coast Survey Report for 1874, pp. 177 and 178.

At Greenwich transit No. 4 was mounted in the park of the observatory on a pier 0s·160 *east** and 1″·74 south of the Greenwich transit circle.

At Paris the meridian telescope (lunette meridienne) is 0s·12 *east* of the meridian of France; hence reduction to standard meridians of the observatories +0s·04 and

$$\Delta\lambda, \text{Greenwich (Tr. Cir.)} - \text{Paris (Mer. of Fr.)}\dagger = 9^m\ 21^s{\cdot}000 \pm 0^s{\cdot}038.$$

(12) DIFFERENCE OF LONGITUDE BETWEEN ATLANTA, GA., AND WASHINGTON, D. C.

Date.	Observers at— A.	Observers at— W.	From western or Atlanta signals.	From eastern or Washington signals.	W.—E.	Mean of W. and E. signals.	Personal equation.	Difference of longitude Δλ	p.	v.
1879.			m. s.	m. s.	s.	m. s.	s.	m. s.		s.
Jan. 25	G. W. Dean.	E. Smith.	29 21·05	29 20·97	0·08	29 21·010	+0·036	29 21·046	4	—0·023
29			21·09	20·99	·10	21·040		21·076	3	+ ·007
Feb. 1			21·15	21·03	·12	21·090		21·126	5	+ ·057
7			20·95	20·81	·14	20·880		20·916	2	— ·153
8			21·11	21·02	·09	21·065		21·101	3	+ ·032
				Mean	·106	29 21·017				
Feb. 15	E. Smith.	G. W. Dean.	29 21·34	29 21·26	·08	29 21·300	−0·036	21·264	2	+ ·195
28			21·21	21·11	·10	·160		21·124	3	+ ·055
Mar. 1			21·14	21·04	·10	·090		21·054	3	— ·015
5			21·13	21·03	·10	·080		21·044	2	— ·025
7			21·07	20·98	·09	·025		20·989	2	— ·080
8			21·10	21·02	·08	·060		21·024	7	—0·045
				Mean	0·092	29 21·119		29 21·069		
				Weighted mean				29 21·069 ± 0s·016		

* Both the Coast Survey Report for 1872, p. 229, and the Coast Survey Report for 1874, p. 177, give "west," but the computation and reduction, p. 230 of the first-named report, and the *record* as corrected by Assistant Hilgard show it to have been "east." For result see Coast and Geodetic Survey Report for 1884, p. 413.

† At the time of writing the difference of longitude between these observatories has not yet been definitely ascertained, chiefly on account of the persistent difference of the values by the English and French observers. There are several direct and indirect results on record; thus eight values given in the monthly notices of the Royal Astronomical Society, January, 1891, vary between the limits 9m 20s·92 and 9m 21s·09 (the value of 1854 being omitted), whereas the values of the English and French observers in 1888 were 9m 20s·85 and 9m 21s·04, and again in 1892, 9m 20s·84 and 9m 21s·05, respectively. In the adjustment of the European longitude net by van de Sande Bakhuyzen (Astronomische Nachrichten, No. 3202, October, 1893) two reductions are made—one with the introduction of the value 9m 20s·83, the other with 9m 21s·03; the corresponding adjusted values were 9m 20s·93 and 9m 21s·00. In my adjustment of the American system of 1884 the result was 9m 20s·95. In view of these circumstances, there is no reason why the above 1872 value should not be introduced with advantage in the present adjustment.

Transmission time: $0^{s}.049 \pm 0.002$.

Personal equation: D.—S. = $-0^{s}.051 \pm 0^{s}.016$; same from weighted means, $-0^{s}.036$.

At Atlanta transit No. 6 was put over the old station of 1874; it is *west* of the City Hall. In 1896 the station was $0^{s}.001$ *east* of that of 1874.

At Washington transit No. 8 was mounted on the pier of 1878 in the grounds of the United States Naval Observatory, old site; it is 44·714 metres, or $0^{s}.124$, *west* of the center of the small dome over the main building.

$\Delta\lambda$, Atlanta (T_{1896}) — Washington observatory, old site (D) = $29^{m}\ 21^{s}.192 \pm 0^{s}.016$.

(13). DIFFERENCE OF LONGITUDE BETWEEN NASHVILLE, TENN., AND LOUISVILLE, KY.

Date.	Observers at— N.	Observers at— L.	From western or Nashville signals.	From eastern or Louisville signals.	W.—E.	Mean of W. and E. signals.	Personal equation.	Difference of longitude $\Delta\lambda$	p.	v.
1879.			*m.* *s.*	*m.* *s.*	*s.*	*m.* *s.*	*s.*	*m.* *s.*		*s.*
Nov. 29	G. W. Dean.	E. Smith.	4 04·430	4 04·390	0.040	4 04·410	+0·055	4 04·465	8	+0·014
Dec. 1			·395	·370	·025	·382		·437	5·5	— ·014
6			·330	·305	·025	·318		·373	0·5	— ·078
				Mean	·030	4 04·370				
Dec. 11	E. Smith.	G. W. Dean.	4 04·560	4 04·540	·020	4 04·550	−0·055	·495	0·5	+ ·044
12			·605	·585	·020	·595		·540	1·5	+ ·089
15			·490	·465	·025	·478		·423	5·5	—0·028
				Mean	0·022	4 04·541		4 04·456		
				Weighted mean				4 04·451 ± 0s·013		

Transmission time: $0^{s}.013 \pm 0^{s}.001$.

Personal equation: D.—S.= $-0^{s}.085 \pm 0^{s}.015$; same from weighted means, $-0^{s}.055$.

At Nashville transit No. 4 was mounted over the old station of 1877 on State House square, Capitol Hill, and *east* of the capitol 2″·572 or $0^{s}.171$.

At Louisville transit No. 6 was mounted over the new station in the grounds of the university, southeast of the Boys' High School.

$\Delta\lambda$, Nashville ($T_{1877\ 79}$)—Louisville ($T_{1879\text{-}83}$)=$4^{m}\ 04^{s}.451 \pm 0^{s}.013$.

(14) DIFFERENCE OF LONGITUDE BETWEEN NASHVILLE, TENN., AND ATLANTA, GA.

Date	Observers at— N.	Observers at— A.	From western or Nashville signals.	From eastern or Atlanta signals.	W.—E.	Mean of W. and E. signals.	Personal equation.	Difference of longitude $\Delta\lambda$	p.	v.
1879–80.			*m.* *s.*	*m.* *s.*	*s.*	*m.* *s.*	*s.*	*m.* *s.*		*s.*
Dec. 26	E. Smith.	G. W. Dean.	9 34·806	9 34·773	0·033	9 34·790	−0·075	9 34·715	4	−0·044
27			·894	·868	·026	·881		·806	3	+ ·047
Jan. 3			·962	·935	·027	·948		·873	2	+ ·114
13			·847	·813	·034	·830		·755	9	— ·004
14			·811	·782	·029	·796		·721	4	— ·038
				Mean	·030	9 34·849				
Jan. 20	G. W. Dean.	E. Smith.	9 34·670	9 34·632	·038	9 34·651	+0·075	·726	2	— ·033
22			·760	·732	·028	·746		·821	8	+ ·062
23			·703	·662	·041	·682		·757	6	— ·002
24			·545	·516	·029	·530		·605	2	— ·154
27			·684	·652	·032	·668		·743	7	—0·016
				Mean	0·034	9 34·655		9 34·752		
				Weighted mean				9 34·759 ± 0s·012		

Transmission time: $0^{s}.016 \pm 0^{s}.001$.

Personal equation: D.— Sm.= $-0^{s}.097 \pm 0^{s}.012$; same from weighted means, = $-0^{s}.075$.

At Nashville transit No. 4 was mounted over the old station of 1877 on State House square, Capitol Hill, and *east* of the building 2″·572 or 0ˢ·171.

At Atlanta transit No. 6 was mounted over the old station of 1874; in 1896 the station was 0ˢ·001 *east* of that of 1874.

$\Delta\lambda$, Nashville ($T_{1877\text{-}79\text{-}80}$) − Atlanta ($T_{1896}$) = 9ᵐ 34ˢ·760 ± 0ˢ·012.

(15) DIFFERENCE OF LONGITUDE BETWEEN NEW ORLEANS, LA., AND NASHVILLE, TENN.

Date	Observers at— N. O.	Observers at— N.	From western or New Orleans signals.	From eastern or Nashville signals.	W.—E.	Mean of W. and E. signals.	Personal equation.	Difference of longitude Δλ	p.	v.
1880.			m. s.	m. s.	s.	m. s.	s.	m. s.		s.
Feb. 16	E. Smith.	G. W. Dean.	13 08·692	13 08·596	0·096	13 08·644	−0·127	13 08·517	0	.....
19			·764	·688	·076	·726		·599	3	− ·078
21			·860	·762	·098	·811		·684	5	+ ·007
23			·898	·804	·094	·851		·724	3	+ ·047
24			·862	·772	·090	·817		·690	5	+ ·013
				Mean	·091	13 08·770				
Mar. 2	G. W. Dean.	E. Smith.	13 08·670	13 08·575	·095	13 08·622	+0·127	·751	0.5	+ ·074
17			·587	·506	·081	·546		·673	5	− ·004
23			·552	·462	·090	·507		·634	6	− ·043
24			·590	·502	·088	·546		·673	3	− ·004
27			·640	·534	·106	·587		·714	7	+0·037
				Mean	0·092	13 08·562		13 08·666		
				Weighted mean				13 08·677 ± 0ˢ·009		

Transmission time: 0ˢ.046 ± 0ˢ.001.

Personal equation (omitting February 16 and March 2), D.—Sm. = −0ˢ·127 ± 0ˢ·010; same from weighted means, −0ˢ·127.

At New Orleans transit No. 8 was mounted at a station 12″·99 or 0ˢ·866 *east* of the old astronomic station of 1858. The 1880 station is also 0″·63 or 0ˢ·042 *west* of St. Patrick's church. The station of 1880 was reoccupied in 1895.

At Nashville transit No. 4 was mounted over the 1877 station, which is 2″·572 or 0ˢ·171 *east* of the center of the tower of the capitol. The station was reoccupied in 1880 and 1881.

$\Delta\lambda$, New Orleans ($T_{1880\text{-}95}$)—Nashville ($T_{1877\text{-}80\text{-}81}$) = 13ᵐ 08ˢ·677 ± 0ˢ·009.

(16) DIFFERENCE OF LONGITUDE BETWEEN NEW ORLEANS, LA., AND ATLANTA, GA.

Date.	Observers at— N. O.	Observers at— A.	From western or New Orleans signals.	From eastern or Atlanta signals.	W — E	Mean of W. and E. signals.	Personal equation.	Difference of longitude Δλ	p.	v.
1880.			m. s.	m. s.	s.	m. s.	s.	m. s.		s.
Mch. 30	G. W. Dean.	E. Smith.	22 43·351	22 43·298	0·053	22 43·324	+0·087	22 43·411	4	+0·041
31			·328	·282	·046	·305		·392	5	+ ·022
Apr. 5			·328	·238	·090	·283		·370	4·5	·000
6			·283	·220	·063	·252		·339	9	− ·031
				Mean	·063	22 43·291				
Apr. 10	E. Smith.	G. W. Dean.	22 43·478	22 43·426	.052	22 43·452	−0·087	·365	3	− ·005
12			·630	·572	·058	·601		·514	2·5	+ ·144
13			·502	·446	·056	·474		·387	3	+ ·017
14			·482	·414	·068	·448		·361	3	− ·009
16			·419	·350	·069	·384		·297	5	−0·073
				Mean	0·061	22 43·472		22 43·382		
				Weighted mean				22 43·370 ± 0ˢ·013		

Transmission time: 0ˢ·031 ± 0ˢ·001.

Personal equation: D. − Sm. = − 0ˢ·090 ± 0ˢ·010; same from weighted means, − 0ˢ·087.

At New Orleans transit No. 8 was mounted 12″·99 or 0ˢ·866 *east* of the old astronomic station of 1858; the 1880 station is also 0″·63 or 0ˢ·042 *west* of St. Patrick's church. When reoccupied in 1895 the transit was over the 1880 station.

At Atlanta transit No. 6 occupied the pier of 1874, located in the grounds of the city hall and court-house; in 1896 the station was 0ˢ·001 *east* of that of 1874.

$\Delta\lambda$, New Orleans ($T_{1880\text{-}95}$) — Atlanta (T_{1896}) = $22^m\ 43^s{\cdot}371 \pm 0^s{\cdot}013$.

(17) DIFFERENCE OF LONGITUDE BETWEEN ATLANTA, GA., AND CHARLESTON, S. C.

Date.	Observers at— A.	Observers at— C.	From western or Atlanta signals.	From eastern or Charleston signals.	W—E	Mean of W. and E. signals.	Personal equation.	Difference of longitude Δλ	p.	v.
1880.			m. s.	m. s.	s.	m. s.	s.	m. s.		s.
May 13	E. Smith.	G. W. Dean.	17 49·409	17 49·375	0·034	17 49·392	—0·140	17 49·252	3	+0·029
14			·404	·369	·035	·386		·246	3	+ ·023
15			·319	·296	·023	·308		·168	4	— ·055
16			·392	·374	·018	·383		·243	4	+ ·020
17			·376	·342	·034	·359		·219	4	— ·004
				Mean	·029	17 49·366				
May 19	G. W. Dean.	E. Smith.	17 49·049	17 49·020	·029	17 49·034	+0·140	·174	3	— ·049
20			·086	·060	·026	·073		·213	3	— ·010
22			·194	·164	·030	·179		·319	3	+ ·096
23			·038	·020	·018	·029		·169	4	— ·054
24			·106	·081	·025	·094		·234	9	+0·011
				Mean	0·026	17 49·082		17 49·224		
				Weighted mean				17 49·223 ± 0ˢ·010		

Transmission time: 0ˢ·014 ± 0ˢ·001.

Personal equation: D.—Sm. = —0ˢ·142 ± 0ˢ·014; same from weighted means, — 0ˢ·140.

At Atlanta transit No. 6 was mounted over the station of 1874. It is located in the grounds of the city hall or court-house and 29·90 metres or 1″·162 or 0ˢ·077 *west* of the cupola of the building. In 1896 the station was 0ˢ·001 *east* of that of 1874.

At Charleston transit No. 8 was set up at a station *east* of the orphan asylum and near the east end of the "Citadel" square. The granite post of 1880 is 8″·48 or 0ˢ.565 *east* of the orphan asylum cupola. The 1880 and 1896 stations are identical.

$\Delta\lambda$, Atlanta (T_{1896})—Charleston ($T_{1880\text{-}96}$)=$17^m\ 49^s{\cdot}222 \pm 0^s{\cdot}010$.

(18) DIFFERENCE OF LONGITUDE BETWEEN WASHINGTON, D. C., AND CAPE MAY, N. J.

Date.	Observers at— W.	Observers at— C. M.	From western or Washington signals.	From eastern or Cape May signals.	W—E	Mean of W. and E. signals.	Personal equation.	Difference of longitude Δλ	p.	v.
1881.			m. s.	m. s.	s.	m. s.	s.	m. s.		s.
May 4	E. Smith.	G. W. Dean.	8 29·394	8 29·377	0·017	8 29·386	—0·136	8 29·250	1	+0·052
7			·315	·296	·019	·305		·169	2	— ·029
9			·328	·311	·017	·320		·184	3	— ·014
10			·287	·272	·015	·280		·144	2	— ·054
11			·406	·387	·019	·396		·260	2·5	+ ·062
				Mean	·017	8 29·337				
May 20	G. W. Dean.	E. Smith.	8 29·019	8 29·008	·011	8 29·014	+0·136	·150	3	— ·048
24			·068	·047	·021	·058		·194	5	— ·004
25			·038	·031	·007	·034		·170	3	— ·028
26			·100	·064	·036	·082		·218	2	+ ·020
27			·106	·088	·018	·097		·233	6	+0·035
				Mean	0·019	8 29·057		8 29·197		
				Weighted mean				8 29·198 ± 0ˢ·009		

Transmission time: $0^s\cdot009 \pm 0^s\cdot001$.

Personal equation: D. − Sm. = $-0^s\cdot140 \pm 0^s\cdot010$; same from weighted means, $-0^s\cdot136$.

At Washington transit No. 8 was mounted over the station (brick pier) established in 1878, November, in the grounds of the United States Naval Observatory, old site, and 44·714 metres, or $0^s\cdot124$, *west* of the center of the small dome of the main building.

At Cape May transit No. 6 was mounted over a station established in the grounds of the Pennsylvania Railroad Company.

$\Delta\lambda$, Washington, United States Naval Observatory, old site (D) — Cape May ($T_{1881\cdot91}$) $= 8^m\ 29^s\cdot074 \pm 0^s\cdot009$.

(19) DIFFERENCE OF LONGITUDE BETWEEN DETROIT, MICH., AND CAMBRIDGE, MASS.*

Date.	Observers at— D.	Observers at— C.	From western or Detroit signals.	From eastern or Cambridge signals.	W—E	Mean of W. and E. signals.	Personal equation.	Difference of longitude. $\Delta\lambda$	p.	v.
1881.			*m.* *s.*	*m.* *s.*	*s.*	*m.* *s.*	*s.*	*m.* *s.*		*s.*
May 13	A. R. Flint.	O. B. Wheeler.	47 41·262	47 41·064	0·198	47 41·163	+0·034	47 41·197	0·5	+0·117
23			·099	40·831	·268	40·965		40·999	0·5	− ·081
24			·144	40·932	·212	41·038		41·072	1	− ·008
26			·154	40·907	·247	41·030		41·064	1	− ·016
June 4			·220	40·948	·272	41·084		41·118	1	+ ·038
11			·177	40·848	·329	41·012		41·046	1	− ·034
				Mean	·254	47 41·049				
June 21	O. B. Wheeler.	A. R. Flint.	47 41·286	47 41·022	·264	41·154	−0·034	41·120	1	+ ·040
22			·292	41·050	·242	41·171		41·137	1	+ ·057
23			·267	41·010	·257	41·138		41·104	1	+ ·024
24			·246	40·973	·273	41·110		41·076	1	− ·004
29			·134	40·857	·277	40·995		40·961	1	−0·119
				Mean	0·263	47 41·114		47 41·081		
				Weighted mean				47 41·080 ± 0s·013		

Transmission time: $0^s\cdot129 \pm 0^s\cdot004$.

Personal equation: F.—W. = $-0^s\cdot033 \pm 0^s\cdot013$; same from weighted means, $-0^s\cdot034$.

At Detroit the transits Nos. 1 and 15, made by W. Würdemann, were mounted on the west stone pier of the United States Lake Survey Observatory (1871–82); this pier is $1^m\cdot55$ or $0^s\cdot004$ west of the other or standard pier. The United States Coast and Geodetic Survey station of 1891 is 125·74 metres or $0^s\cdot366$ east of the old longitude pier of 1871. The observers carried their instruments with them when interchanging stations. No. 1 was used by Mr. Flint, No. 15 by Mr. Wheeler.

At Cambridge the same transits were mounted over the United States Coast and Geodetic Survey station of 1872, which is 32·918 metres or $0^s\cdot096$ *west* of the dome of the Harvard College Observatory.

$\Delta\lambda$, Detroit (T_{1891}) — Cambridge Observatory (D) $= 47^m\ 40^s\cdot806 \pm 0^s\cdot013$.

* Determination by the United States Lake Survey; see Appendix III of Professional Papers of the Corps of Engineers, U. S. A., No. 24, or "Report of the Primary Triangulation of the United States Lake Survey, by Lieut. Col. C. B. Comstock, etc., Washington, 1882," pp. 866–895.

(20) DIFFERENCE OF LONGITUDE BETWEEN CINCINNATI, OHIO, AND WASHINGTON, D. C

Date.	Observers at— C.	W.	From western or Cincinnati signals.	From eastern or Washington signals.	W—E	Mean of W. and E. signals.	Personal equation.	Difference of longitude Δλ	p.	v.
1881.			m. s.	m. s.	s.	m. s.	s.	m. s.		s.
July 18	G. W. Dean.	E. Smith.	29 29·038	29 28·991	0·047	29 29·014	+0·148	29 29·162	1	—0·010
19			·041	29·001	·040	·021		·169	2·5	— ·003
24			·032	·002	·030	·017		·165	2·5	— ·007
25			·061	·022	·039	·042		·190	2	+ ·018
				Mean	·039	29 29·024				
Aug. 2	E. Smith.	G. W. Dean.	29 29·394	29 29·361	·033	29 29·378	—0·148	·230	1	+ ·058
3			·339	·306	·033	·322		·174	1	+ ·002
4			·270	·242	·028	·256		·108	1	— ·064
5			·266	·234	·032	·250		·102	1·5	— ·070
8			·413	·378	·035	·396		·248	1·5	+0·076
				Mean	0·032	29 29·320		29 29·172		
				Weighted means				29 29·172 ± 0ˢ·011		

Transmission time: 0ˢ·018 ± 0ˢ·001.

Personal equation: D.—Sm. = —0ˢ·148 ± 0ˢ·010; same from weighted means, —0ˢ·148.

At Cincinnati transit No. 4 was mounted in the grounds of the astronomic observatory on Mount Lookout. The station is 0″·55* or 0ˢ·037 *west* of the center of the dome.

At Washington transit No. 8 was mounted in the grounds of the United States Naval Observatory (old site), on the old brick pier established in November, 1878, and which is 44·714 metres or 0ˢ·124 *west* of the center of the small central dome of the main building.

$\Delta\lambda$, Cincinnati Observatory (D)—Washington United States Naval Observatory, old site, (D) = 29ᵐ 29ˢ·259 ± 0ˢ·011.

(21) DIFFERENCE OF LONGITUDE BETWEEN NASHVILLE, TENN., AND CINCINNATI, OHIO.

Date.	Observers at— N.	C.	From western or Nashville signals.	From eastern or Cincinnati signals.	W − E	Mean of W. and E. signals.	Personal equation.	Difference of longitude Δλ	p	v
1881.			m. s.	m. s.	s.	m. s.	s.	m. s.		s
Aug. 25	C. H. Sinclair.	E. Smith.	9 26·500	9 26·475	0·025	9 26·488	+0·120	9 26·608	3	—0·037
26			·549	·515	·034	·532		·652	6	+ ·007
27			·517	·481	·036	·499		·619	4	— ·026
29			·570	·549	·021	·560		·680	5	+ ·035
				Mean	·029	9 26·520				
Sept. 1	E. Smith.	C. H. Sinclair.	9 26·791	9 26·758	·033	9 26·774	—0·120	·654	5	+ ·009
3			·765	·735	·030	·750		·630	4	— ·015
5			·810	·771	·039	·790		·670	4	+ ·025
6			·762	·738	·024	·750		·630	5	—0·015
				Mean	0·032	9 26·766		9 26·643		
				Weighted mean				9 26·645 ± 0ˢ·006		

Transmission time, 0ˢ·015 ± 0ˢ·001.

Personal equation, Sm. — Sin. = + 0ˢ·123 ± 0ˢ·008; same from weighted means, + 0ˢ·120.

At Nashville transit No. 8 was mounted over the station of 1877, *east* of the Capitol or State House.

*0″·53 by direct measure, 0″·55 by triangulation in 1890.

At Cincinnati transit No. 4 was mounted in the grounds of the astronomic observatory on Mount Lookout; the station is 0″·55 or 0ˢ·037 *west* of the center of the dome.

$\Delta\lambda$, Nashville ($T_{1877\text{-}81}$) − Cincinnati (D) = 9ᵐ 26ˢ·682 ± 0ˢ·006.

(22) DIFFERENCE OF LONGITUDE BETWEEN ST. LOUIS, MO., AND CINCINNATI, OHIO.

Date	Observers at— S. L.	Observers at— C.	From western or St. Louis signals.	From eastern or Cincinnati signals.	W − E	Mean of W. and E. signals.	Personal equation.	Difference of longitude Δλ	p	v
1881.			m. s.	m. s.	s.	m. s.	s.	m. s.		s.
Sept. 12	E. Smith.	G. W. Dean.	23 08·040	23 07·935	0·105	23 07·988	−0·132	23 07·856	4	−0·001
13			07·914	07·882	·032	07·898		·766	3	− ·091
19			08·024	07·989	·035	08·006		·874	2	+ ·017
21			08·068	08·006	·062	08·037		·905	5	+ ·048
				Mean	·058	23 07·982				
Sept. 23	G. W. Dean.	E. Smith.	23 07·637	23 07·597	·040	23 07·617	+0·132	·749	6	− ·108
24			·732	·691	·041	·712		·844	5	− ·013
29			·790	·742	·048	·766		·898	18	+ ·041
Oct. 5			·725	·696	·029	·710		·842	3	−0·015
				Mean	0·040	23 07·701		23 07·842		
				Weighted mean				23 07·857 ± 0″·015		

Transmission time (omitting September 12 and 21): 0ˢ·019 ± 0ˢ·001.

Personal equation: D. − Sm. = − 0ˢ·140 ± 0ˢ·014; same from weighted means, − 0ˢ·132.

At St. Louis transit No. 6 was mounted over the new station of 1881, located in the east end of the small brick observatory attached to the Washington University; it is 1″·868 or 0ˢ·125 *west* of the old station of 1869–71.

At Cincinnati transit No. 4 was mounted in the grounds of the astronomic observatory on Mount Lookout; the station is 0″·55 or 0ˢ·037 *west* of the center of the dome of the building.

$\Delta\lambda$, St. Louis ($T_{1881\text{-}82}$) − Cincinnati (D) = 23ᵐ 07ˢ·894 ± 0ˢ·015.

(23) DIFFERENCE OF LONGITUDE BETWEEN ST. LOUIS, MO., AND NASHVILLE, TENN.

Date	Observers at— S. L.	Observers at— N.	From western or St. Louis signals.	From eastern or Nashville signals.	W−E	Mean of W. and E. signals.	Personal equation.	Difference of longitude Δλ	p.	v.
1881			m. s.	m. s.	s.	m. s.	s.	m. s.		s.
Oct. 10	G. W. Dean.	E. Smith.	13 41·019	13 40·989	0·030	13 41·004	+0·189	13 41·193	4	−0·014
12			·057	41·032	·025	·044		·233	2·5	+ ·026
20			·016	40·996	·020	·006		·195	1	− ·012
				Mean	·025	13 41·018				
Oct. 21	E. Smith.	G. W. Dean.	13 41·456	13 41·427	·029	13 41·442	−0·189	·253	1	+ ·046
26			·353	·329	·024	·341		·152	3	− ·055
31			·358	·337	·021	·348		·159	1·5	− ·048
Nov. 1			·475	·448	·027	·462		·273	3	+0·066
				Mean	0·025	13 41·398		13 41·208		
				Weighted mean				13 41·207 ±0″·013		

Transmission time: 0ˢ·013 ± 0ˢ·001.

Personal equation: D − Sm. = − 0ˢ·190 ± 0ˢ·012; same from weighted means, − 0ˢ·189.

At St. Louis, transit No. 6 was mounted over the new station of 1881 located at the east end of a small brick observatory attached to the Washington University. It is 1″·868 or 0ˢ·125 *west* of the old station of 1869 and 1871.

At Nashville, transit No. 8 was placed over the station established in 1877. It is east of the center of the State house tower.

$\Delta\lambda$, St. Louis ($T_{1881\text{-}82}$) — Nashville ($T_{1877\text{-}81}$) = $13^m\ 41^s\cdot207 \pm 0^s\cdot013$.

(24) DIFFERENCE OF LONGITUDE BETWEEN KANSAS CITY, MO., AND ST. LOUIS, MO.

Date.	Observers at— K. C.	Observers at— S. L.	From western or Kansas City signals.	From eastern or St. Louis signals.	W—E	Mean of W. and E. signals.	Personal equation.	Difference of longitude $\Delta\lambda$	p.	v.
1882.			*m.* *s.*	*m.* *s.*	*s.*	*m.* *s.*	*s.*	*m.* *s.*		*s.*
Sept. 21	C. H. Sinclair.	C. Terry.	17 32·327	17 32·300	0·027	17 32·314	−0·151	17 32·163	2	−0·020
22			·549	·521	·028	*·535				
23			·357	·321	·036	·339		·188	3	+ ·005
26			·345	·306	·039	·326		·175	8	− ·008
29			·369	·322	·047	·346		·195	7	+ ·012
				Mean	·035	17 32·331				
Oct. 3	C. Terry.	C. H. Sinclair.	17 32·128	17 32·077	·051	17 32·102	+0·151	·253	10	+ ·070
5			31·961	31·921	·040	31·941		·092	2	− ·091
6			31·982	31·964	·018	31·973		·124	2	− ·059
11			32·007	31·967	·040	31·987		·138	7	− ·045
13			32·028	32·013	·015	32·020		·171	6	−0·012
				Mean	0·033	17 32·003		17 32·167		
				Weighted mean				17 32·183 ± $0^s\cdot011$		

*Rejected.

Transmission time: $0^s\cdot017 \pm 0^s\cdot001$.

Personal equation: Sinclair — Terry = $+ 0^s\cdot164 \pm 0^s\cdot010$; same from weighted means, $\pm 0^s\cdot151$.

At Kansas City, transit No. 4 was mounted at the astronomic station of 1882, in the grounds of the Franklin School. It is marked by two sandstone piers.

At St. Louis, transit No. 6 was put over the station of 1881, in the small brick observatory attached to the Washington University. It is $0^s\cdot125$ *west* of the old station of 1869–71.

$\Delta\lambda$, Kansas City ($T_{1882\text{-}85}$) — St. Louis ($T_{1881\text{-}82}$) = $17^m\ 32^s\cdot183 \pm 0^s\cdot011$.

(25) DIFFERENCE OF LONGITUDE BETWEEN OMAHA, NEBR., AND ST. LOUIS, MO.

Date.	Observers at— O.	Observers at— S. L.	From western or Omaha signals.	From eastern or St. Louis signals.	W—E	Mean of W. and E. signals.	Personal equation.	Difference of longitude $\Delta\lambda$	p.	v.
1882.			*m.* *s.*	*m.* *s.*	*s.*	*m.* *s.*	*s.*	*m.* *s.*		*s.*
Oct. 20	C. Terry.	C. H. Sinclair.	22 56·667	22 56·626	0·041	22 56·646	+0·172	22 56·818	3	−0·013
21			·626	·559	·067	·592		·764	1	− ·067
23			·651	·603	·048	·627		·799	2	− ·032
26			·741	·703	·038	·722		·894	3	+ ·063
27			·675	·627	·048	·651		·823	3	− ·008
				Mean	·048	22 56·648				
Nov. 6	C. H. Sinclair.	C. Terry.	22 57·044	22 57·009	·035	22 57·026	−0·172	·854	4	+ ·023
7			57·037	56·979	·058	57·008		·836	2	+ ·005
12			56·957	·912	·045	56·934		·762	5	− ·069
20			57·023	·984	·039	57·004		·832	6	+ ·001
21			57·104	·984	·120	57·044		·872	6	+0·041
				Mean	0·059	22 57·003		22 56·825		
				Weighted mean				22 56·831 ± $0^s\cdot010$		

Transmission time (omitting November 21): $0^s.23 \pm 0^s.001$.

Personal equation: Sinclair—Terry $= +0^s.178 \pm 0^s.009$; same from weighted means, $+0^s.172$.

At Omaha, transit No. 4 was mounted over the 1869 station in the grounds then known as the Capitol Square, now the grounds of the high school. The station of 1873 was in the same meridian as 1869 and 1882.

At St. Louis, transit No. 6 was placed over the station of 1881 in the small brick observatory attached to the Washington University. It is $0^s.125$ *west* of the old station of 1869 and 1871.

$$\Delta\lambda, \text{Omaha } (T_{1869\text{-}91}) - \text{St. Louis } (T_{1881\text{-}82}) = 22^m\ 56^s.831 \pm 0^s.010.$$

(26) DIFFERENCE OF LONGITUDE BETWEEN OMAHA, NEBR., AND KANSAS CITY, MO.

Date.	Observers at— O.	Observers at— K.C.	From western or Omaha signals.	From eastern or Kansas City signals.	W—E	Mean of W. and E. signals.	Personal equation.	Difference of longitude $\Delta\lambda$	p.	v.
1882–83.			m. s.	m. s.	s.	m. s.	s.	m. s.		s.
Nov. 26	C. H. Sinclair.	C. Terry.	5 24·853	5 24·822	0·031	5 24·838	−0·169	5 24·669	7	+0·043
29			·836	·816	·020	·826		·657	3	+ ·031
30			·836	·816	·020	·826		·657	3	+ ·031
Dec. 1			·781	·767	·014	·774		·605	4	− ·021
2			·708	·684	·024	·696		·527	4	− ·099
				Mean	·022	5 24·792				
Dec. 10	C. Terry.	C. H. Sinclair.	5 24·612	5 24·584	·028	5 24·598	+0·169	·767	1	+ ·141
13			·583	·560	·023	·572		·741	3	+ ·115
22			·451	·440	·011	·446		·615	4	− ·011
27			·387	·366	·021	·376		·545	3	− ·081
Jan. 1			·368	·349	·019	·358		·527	2	−0·099
				Mean	·020	5 24·470		5 24·631		
				Weighted mean				5 24·626 ± 0s·016		

Transmission time: $0^s.011 \pm 0^s.001$.

Personal equation: Sinclair − Terry $= +0^s.161 \pm 0^s.019$; same from weighted means, $+0^s.169$.

At Omaha, transit No. 4 was mounted over the station of 1869 in the grounds of the High School, formerly known as Capitol square.

At Kansas City, transit No. 6 stood over the station of 1882 in the grounds of the Franklin School.

$$\Delta\lambda, \text{Omaha } (T_{1869\text{-}91}) - \text{Kansas City } (T_{1882\text{-}85}) = 5^m\ 24^s.626 \pm 0^s.016.$$

(27) DIFFERENCE OF LONGITUDE BETWEEN MONTREAL, CANADA, AND CAMBRIDGE, MASS.*

This work was executed by Prof. W. A. Rodgers, of the Cambridge Observatory, and by Prof. C. H. McCleod of the McGill College Observatory. The results as given below were taken from the "Transactions Royal Society of Canada," Vol. III, 1885.

* Transactions Royal Society of Canada, 1885, Vol. III, Sec. III, Art. IX, "The Longitude of the McGill College Observatory. By Prof. W. A. Rodgers, Harvard College Observatory, and Prof. C. H. McCleod, McGill College Observatory." Communicated by Dr. Johnson, May 28, 1885, pp. 111–177, Montreal, 1886.

This determination is included in the scheme on account of its accuracy and because it forms an important link of verification in the longitude net.

Date.	Observers at— M.	Observers at— C.	From western or Montreal signals.	From eastern or Cambridge signals.	W.—E.	Mean of W. and E. signals.	Correction for personal equation.	Difference of longitude $\Delta\lambda$.	p.	v.
1883.			*m.* *s.*	*m.* *s.*	*s.*	*m.* *s.*	*s.*	*m.* *s.*		*s.*
June 2	W. A. Rodgers. C. H. McCleod.	C. H. McCleod. W. A. Rodgers.	9 47·322	9 47·221	0·101	9 47·271	+0·229	9 47·500	6	−0·010
4			·432	·312	·120	·372	·251	·623	8	+ ·113
5			·281	·182	·099	·232	·214	·446	4	− ·004
				Mean	·107	·292				
June 20			9 47·837	9 47·758	·079	9 47·797	−0·198	47·599	1	+ ·089
21			·730	·639	·091	·685	·263	·422	4	− ·088
23			·775	·706	·069	·741	·235	·506	7	−0·004
				Mean	0·080	·741		9 47·516		
				Weighted mean				9 47·520		

Transmission time: $0^s\cdot047 \pm 0^s\cdot002$.

Personal equation from direct comparisons of star transits referred to mean thread of tally, the observers leading alternately, June 13 and 14 at Montreal and June 28 and 30 at Cambridge: (R—M) cos $\frac{2}{3}\delta = +0^s\cdot130$ and $+0^s\cdot154$, respectively.

In addition to above, star transits were exchanged on June 23, with the resulting value, for $\Delta\lambda$, $9^m\ 47^s\cdot465$ and weight $p = 3$, whence weighted mean adopted by the observers:

Montreal, McGill College Observatory (T) — Cambridge, Harvard College Observatory (T) $= 9^m\ 47^s\cdot510 \pm 0^s\cdot019$.

At Cambridge, the transit * (known as the Russian transit) was $13^m\cdot53$ or $0^s\cdot039$ west of the center of the dome.

$\Delta\lambda$, Montreal, McGill College Observatory (T) — Cambridge, Harvard College Observatory (D) $= 9^m\ 47^s\cdot549 \pm 0^s\cdot019$.

(28) DIFFERENCE OF LONGITUDE BETWEEN CHICAGO, ILL., AND LOUISVILLE, KY.

Date.	Observers at— C.	Observers at— L.	From western or Chicago signals.	From eastern or Louisville signals.	W—E	Mean of W. and E. signals.	Personal equation.	Difference of longitude $\Delta\lambda$	p.	v.
1883.			*m.* *s.*	*m.* *s.*	*s.*	*m.* *s.*	*s.*	*m.* *s.*		*s.*
Sept. 25	F. H. Parsons.	C. Terry.	7 23·554	7 23·516	0·038	7 23·535	−0·029	7 23·506	1	−0·050
26			·598	·559	·039	·578		·549	5	− ·007
Oct. 2			·747	·716	·031	·732		·703	2	+ ·147
8			·612	·575	·037	·594		·565	5	+ ·009
10			·603	·564	·039	·584		·555	9	− ·001
16			·501	·479	·022	·490		·461	1	− ·095
29			·557	·534	·023	·545		·516	4	− ·040
				Mean	·033	7 23·580				
31	C. Terry.	F. H. Parsons.	7 23·496	7 23·468	·028	7 23·482	+0·029	·511	3	− ·045
Nov. 1			·544	·509	·035	·526		·555	5	− ·001
2			·587	·565	·022	·576		·605	2	+ ·049
6			·495	·459	·036	·477		·506	4	− ·050
11			·603	·575	·028	·589		·618	4	+0·062
				Mean	0·030	7 23·530		7 23·554		
				Weighted mean				7 23·556 ± 0s·010		

* For description of instruments at the two stations see above publication. The Russian transit stood 44·4 feet west of the dome (center).

Transmission time: $0^s.016 \pm 0^s.001$.

Personal equation: Terry—Parsons $= -0^s.025 \pm 0^s.011$; same from weighted means, $-0^s.029$.

At Chicago, transit No. 6 was mounted at a place in the grounds of the Chicago University (old site), and not far from the meridian of the Dearborn Observatory.

The station of 1883 was lost when the university had to give up the location; the new station of 1891 in the grounds of the Chicago City water works is, by triangulation, $2^s.252$ west of the old one.

At Louisville, transit No. 8 was mounted over the station established in the grounds of the High School in 1879.

$$\Delta\lambda, \text{Chicago } (T_{1891}) - \text{Louisville } (T_{1879\text{-}83}) = 7^m\ 25^s.808 \pm 0^s.010.$$

(29) DIFFERENCE OF LONGITUDE BETWEEN GALVESTON, TEX., AND LITTLE ROCK, ARK.

Date.	Observers at— G.	Observers at— L. R.	From western or Galveston signals.	From eastern or Little Rock signals.	W—E	Mean of W. and E. signals.	Personal equation.	Difference of longitude $\Delta\lambda$	p.	v.
1885.			*m.* *s.*	*m.* *s.*	*s.*	*m.* *s.*	*s.*	*m.* *s.*		*s.*
Apr. 28	E. Smith.	C. H. Sinclair.	10 04·348	10 04·315	0·033	10 04·332	−0·044	10 04·288	5·5	+0·044
30			·370	·343	·027	·356		·312	1	+ ·068
May 3			·281	·254	·027	·268		·224	5·5	— ·020
4			·190	·121	·069	·156		·112	2·5	— ·132
6			·317	·282	·035	·300		·256	6	+ ·012
9			·331	·273	·058	·302		·258	4	+ ·014
				Mean	·041	10 04·286				
May 12	C. H. Sinclair.	E. Smith.	10 04·249	10 04·211	·038	10 04·230	+0·044	·274	4·5	+ ·030
14			·228	·208	·020	·218		·262	2	+ ·018
15			·167	·151	·016	·159		·203	2·5	— ·041
21			·173	·139	·034	·156		·200	1·5	−0·044
				Mean	0·027	10 04·191		10 04·239		
				Weighted mean				10 04·244 ± 0·011		

Transmission time: $0^s.018 \pm 0^s.002$.

Personal equation: Sm.— Sin.$= +0^s.047 \pm 0^s.008$; same from weighted means, $+0^s.044$.

At Galveston transit No. 8 was mounted over the new station of 1885; it was placed in the square to the west of the old station of 1868, and near the Ball High School. The new station became necessary because the old one could not be reoccupied. Their relative positions are:

	m.	″	*s.*
Station of 1868 *east* of the north tower of the cathedral,	94·81	or 3·514	or 0·234.
Station of 1885 *west* of the north tower of the cathedral,	71·49	2·647	0·177.
Also Station of 1895 *west* of the north tower of the cathedral,	50·66	1·875	0·125.

At Little Rock transit No. 6 was mounted over the new station of 1885, located in the grounds surrounding the custom-house and post-office, and west of the building. The relative positions of the old 1882 and the new 1885 stations are as follows:

	m.	″	*s.*
Station of 1882 *west* of the flag pole of building,	36·66	or 1·446	or 0·096.
Station of 1885 *west* of the flag pole of building,	40·13	1·578	0·105.

$$\Delta\lambda, \text{Galveston } (T_{1895}) - \text{Little Rock } (T_{1885\text{-}93\text{-}96}) = 10^m\ 04^s.192 \pm 0^s.011.$$

(30) DIFFERENCE OF LONGITUDE BETWEEN KANSAS CITY, MO., AND LITTLE ROCK, ARK.

Date.	Observers at— K.C.	Observers at— L.R.	From western or Kansas City signals.	From eastern or Little Rock signals.	W—E	Mean of W. and E. signals.	Personal equation.	Difference of longitude $\Delta\lambda$	p.	v.
1885.			*m.* *s.*	*m.* *s.*	*s.*	*m.* *s.*	*s.*	*m.* *s.*		*s.*
May 28	C. H. Sinclair.	E. Smith.	9 15·536	9 15·448	0·088	9 15·492	+0·129	9 15·621	1·5	−0·023
30			·545	·496	·049	·520		·649	4·5	+ ·005
31			·565	·476	·089	·520		·649	7·5	+ ·005
June 1			·557	·491	·066	·524		·653	6	+ ·009
4			·530	·465	·065	·498		·627	5	− ·017
				Mean	·071	9 15·511				
June 11	E. Smith.	C. H. Sinclair.	9 15·822	9 15·736	·086	9 15·779	−0·129	·650	5·5	+ ·006
12			·785	·719	·066	·752		·623	4·5	− ·021
18			·811	·739	·072	·775		·646	3	+ ·002
19			·830	·738	·092	·784		·655	4·5	+0·011
				Mean	0·079	9 15·773		9 15·641		
				Weighted mean				9 15·644 ± 0ˢ·003		

Transmission time: 0ˢ·037 ± 0ˢ·002.

Personal equation: Sm. − Sin. = + 0ˢ·131 ± 0ˢ·003; same from weighted means, + 0ˢ·129.

At Kansas City transit No. 8 was mounted over the old station established by Assistant C. H. Sinclair in September, 1882; the station is in the grounds of the Franklin School building.

At Little Rock transit No. 6 stood over the new station of 1885; the old station of 1882 could not be identified. The new station of 1885 is near that of 1882 and 0″·132 or 0ˢ·009 *west* of it.

$\Delta\lambda$, Kansas City ($T_{1882\text{-}85}$) − Little Rock ($T_{1885\text{-}93\text{-}96}$) = 9ᵐ 15ˢ·644 ± 0ˢ·003.

(31) DIFFERENCE OF LONGITUDE BETWEEN COLORADO SPRINGS, COLO., AND KANSAS CITY, MO.

Date	Observers at— C.S.	Observers at— K.C.	From western or Colorado Spgs. signals.	From eastern or Kansas City signals.	W—E	Mean of W. and E. signals.	Personal equation.	Difference of longitude. $\Delta\lambda$	p.	v.
1885.			*m.* *s.*	*m.* *s.*	*s.*	*m.* *s.*	*s.*	*m.* *s.*		*s.*
July 28	E. Smith.	C. H. Sinclair.	40 55·511	40 55·437	0·074	40 55·474	−0·108	40 55·366	5	+0·039
Aug. 2			·454	·401	·053	·428		·320	4·5	− ·007
4			·366	·303	·063	·334		·226	2·5	− ·101
5			·595	·503	·092	·549		·441	1	+ ·114
7			·478	·378	·100	·428		·320	4·5	− ·007
				Mean	·076	40 55·443				
Aug. 12	C. H. Sinclair.	E. Smith.	40 55·263	40 55·192	·071	40 55·228	+0·108	·336	4·5	+ ·009
13			·223	·132	·091	·178		·286	4	− ·041
14			·254	·156	·098	·205		·313	3	− ·014
15			·313	·241	·072	·277		·385	3	+0·058
				Mean	0·083	40 55·222		40 55·333		
				Weighted mean				40 55·327 ± 0ˢ·011		

Transmission time: 0ˢ·040 ± 0ˢ·002.

Personal equation: Sm. − Sin. = + 0ˢ·110 ± 0ˢ·010; same from weighted means, + 0ˢ·108.

At Colorado Springs transit No. 6 was used. Two stations have been occupied at this place, one established by Assistant G. W. Dean in August, 1873, in the experimental garden, marked by a sandstone pier. In consequence of the removal of this station a second one was established in 1885 by Assistant E. Smith. The 1885 station is in the grounds of the Colorado Springs Land Company. It is 11·214 metres or 0″·465 or 0ˢ·031 *east* of the 1873 station.

At Kansas City transit No. 8 was mounted over the old station established in 1882 in the grounds of the Franklin School.

$\Delta\lambda$, Colorado Springs ($T_{1885\text{-}86}$) — Kansas City ($T_{1882\text{-}85}$) = $40^m\ 55^s{\cdot}327 \pm 0^s{\cdot}011$.

(32) DIFFERENCE OF LONGITUDE BETWEEN SANTA FÉ, N. MEX., AND COLORADO SPRINGS, COLO.

Date.	Observers at— S. F.	Observers at— C. S.	From western or Santa Fé signals.	From eastern or Colorado Spgs. signals.	W—E	Mean of W. and E. signals.	Personal equation.	Difference of longitude $\Delta\lambda$	$p.$	$v.$
1886.			m. s.	m. s.	s.	m. s.	s.	m. s.		s.
May 7	C. H. Sinclair.	E. Smith.	4 30·145	4 30·096	0·049	4 30·120	+0·065	4 30·185	1·5	+0·078
8			·086	30·001	·085	30·044		·109	4·5	+ ·002
14			·011	29·933	·078	29·972		·037	2	— ·070
17			·071	30·013	·058	30·042		·107	2·5	— ·000
18			·081	30·019	·062	30·050		·115	2·5	+ ·008
				Mean	·066	4 30·046				
May 21	E. Smith.	C. H. Sinclair.	4 30·263	4 30·214	·049	4 30·238	—0·065	·173	8	+ ·066
27			·188	·135	·053	·162		·097	1·5	— ·010
28			·212	·140	·072	·176		·111	4	+ ·004
31			·211	·142	·069	·176		·111	4	+ ·004
June 9			·138	·071	·067	·104		·039	8	—0·068
				Mean	0·062	4 30·171		4 30·108		
				Weighted mean				4 30·107 ± 0s·012		

Transmission time; $0^s{\cdot}032 \pm 0^s{\cdot}001$.

Personal equation: Sm.—Sin. = $+0^s{\cdot}062 \pm 0^s{\cdot}008$; same from weighted means, $+0^s{\cdot}065$.

At Santa Fé, transit No. 4 was mounted on the stone pier used by the United States Engineers in the grounds of Fort Marcy military reservation; it is located on the parade ground and was first occupied in 1873.

At Colorado Springs, transit No. 6 was mounted over the new or 1885 station in the grounds of the Colorado Springs Land Company. It is 11·214 metres or $0^s{\cdot}031$ east of the old station of 1873.

$\Delta\lambda$, Santa Fé ($T_{1873\text{-}86\text{-}95}$) — Colorado Springs ($T_{1885\text{-}86}$) = $4^m\ 30^s{\cdot}107 \pm 0^s{\cdot}012$.

(33) DIFFERENCE OF LONGITUDE BETWEEN SALT LAKE CITY, UTAH, AND COLORADO SPRINGS, COLO.

Date.	Observers at— S. L. C.	Observers at— C. S.	From western or Salt Lake City signals.	From eastern or Colorado Spgs. signals.	W—E	Mean of W. and E. signals.	Personal equation.	Difference of longitude. $\Delta\lambda$	$p.$	$v.$
1886.			m. s.	m. s.	s.	m. s.	s.	m. s.		s.
Aug. 19	E. Smith.	C. H. Sinclair.	28 18·461	28 18·256	0·205	28 18·358	+0·053	28 18·411	2	—0·060
21			·465	·338	·127	·402		·455	3·5	— ·016
24			·488	·340	·148	·414		·467	1·5	— ·004
26			·488	·348	·140	·418		·471	6	·000
28			·530	·389	·141	·460		·513	4·5	+ ·042
				Mean	·152	28 18·410				
Sept. 2	C. H. Sinclair.	E. Smith.	28 18·554	28 18·427	·127	28 18·490	—0·053	·437	3	— ·034
3			·573	·370	·203	·472		·419	5·5	— ·052
4			·659	·412	·247	·536		·483	13	+ ·012
5			·627	·431	·196	·529		·476	4·5	+ ·005
6			·653	·499	·154	·576		·523	4·5	+0·052
				Mean	0·185	28 18·521		28 18·466		
				Weighted mean				28 18·471 ± 0s·008		

Transmission time: $0^s{\cdot}084 \pm 0^s{\cdot}004$.

Personal equation: Sm. — Sin. = $-0^s{\cdot}056 \pm 0^s{\cdot}004$; same from weighted means, $-0^s{\cdot}053$.

At Salt Lake City transit No. 4 was mounted on the old pier, marking the station established by Assistant G. W. Dean in January, 1869, in the southeast corner of the Temple block.

At Colorado Springs transit No. 6 was placed over the new or 1885 station, marked by a stone pier, in the grounds of the Colorado Springs Land Company; it is 11·214 metres or 0″·465 or 0ˢ·031 *east* of the old station of 1873.

$\Delta\lambda$, Salt Lake City ($T_{1869-90}$) — Colorado Springs ($T_{1885-86}$) = $28^{m}\ 18^{s}\cdot471 \pm 0^{s}\cdot008$.

(34) DIFFERENCE OF LONGITUDE BETWEEN SAN FRANCISCO, CAL., AND SALT LAKE CITY, UTAH.

Date.	Observers at— S. F.	Observers at— S. L. C.	From western or San Francisco signals.	From eastern or Salt Lake City signals.	W — E	Mean of W. and E. signals.	Personal equation.	Difference of longitude $\Delta\lambda$	p.	v.
1887.			m. s.	m. s.	s.	m. s.	s.	m. s.		s.
May 4	E. Smith.	C. H. Sinclair.	42 07·801	42 07·734	0·067	42 07·768	+0·025	42 07·793	2·5	+0·097
7			·656	·578	·078	·617		·642	1	— ·054
9			·619	·540	·079	·580		·605	1·5	— ·091
10			·635	·530	·105	·582		·607	0·5	— ·089
12			·706	·617	·089	·662		·687	1	— ·009
				Mean	·084	42 07·642				
May 20	C. H. Sinclair.	E. Smith.	42 07·776	42 07·696	·080	42 07·736	—0·025	·711	3·5	+ ·015
25			·755	·686	·069	·720		·695	3	— ·001
26			·754	·687	·067	·720		·695	5·5	— ·001
27			·756	·604	·152	·680		·655	2	— ·041
June 6			·776	·691	·085	·734		·709	3	+0·013
				Mean	0·091	42 07·718		42 07·680		
				Weighted mean				42 07·696 ± 0ˢ·011		

Transmission time: $0^{s}\cdot044 \pm 0^{s}\cdot003$.

Personal equation: Sm. — Sin. = $-0^{s}\cdot038 \pm 0^{s}\cdot010$; same from weighted means, $-0^{s}\cdot025$.

At San Francisco transit No. 3 was mounted on the western or old pier of 1881, in the Lafayette Park Observatory.

At Salt Lake City transit No. 4 was mounted on the old pier of the observatory of 1869, in the southeast corner of the Temple block.

$\Delta\lambda$, San Francisco, Lafayette Park ($T_{1881-87}$) — Salt Lake City ($T_{1869-90}$) = $42^{m}\ 07^{s}\cdot696 \pm 0^{s}\cdot011$.

(35) DIFFERENCE OF LONGITUDE BETWEEN PORTLAND, OREG., AND SAN FRANCISCO, CAL.

Date.	Observers at— P.	Observers at— S. F.	From western or Portland signals.	From eastern or San Francisco signals.	W — E	Mean of W. and E. signals.	Personal equation.	Difference of longitude $\Delta\lambda$	p.	v.
1887.			m. s.	m. s.	s.	m. s.	s.	m. s.		s.
June 20	E. Smith.	C. H. Sinclair.	0 59·945	0 59·820	0·125	0 59·882	+0·099	0 59·981	1·5	—0·002
27			60·067	·909	·158	·988		60·087	2·5	+ ·104
28			59·936	·810	·126	·873		59·972	2·5	— ·011
July 5			59·934	·778	·156	·856		59·955	1	— ·028
8			59·827	·675	·152	·751		59·850	1·5	— ·133
				Mean	·143	0 59·870				
July 18	C. H. Sinclair.	E. Smith.	0 60·196	0 60·071	·125	0 60·134	—0·099	60·035	1·5	+ ·052
Aug. 12			·172	·025	·147	·098		59·999	3	+ ·016
16			·221	60·056	·165	·138		60·039	2·5	+ ·056
18			·065	59·948	·117	·006		59·907	3	— ·076
19			·124	60·011	·113	·068		59·969	3	—0·014
				Mean	0·133	0 60·089		0 59·979		
				Weighted mean				0 59·983 ± 0ˢ·015		

Transmission time: $0^s.069 \pm 0^s.002$.

Personal equation: Sm.—Sin.$= -0^s.109 \pm 0^s.013$; same from weighted means, $-0^s.099$.

At Portland, transit No. 4 was mounted over the newly established station in the grounds of the custom-house, on the Sixth street or western side. The center of the two stones forming the pier is $1''.177$ or $0^s.078$ west of the cupola of the building.

At San Francisco, transit No. 3 was mounted on the western (or standard) pier of the Lafayette Park Observatory. This pier was established by Assistant G. Davidson in 1881.

$\Delta\lambda$, Portland ($T_{1887\text{-}88}$)—San Francisco, Lafayette Park ($T_{1881\text{-}87}$)$=59^s.983 \pm 0^s.015$.

(36). DIFFERENCE OF LONGITUDE BETWEEN PORTLAND, OREG., AND WALLA WALLA, WASH.

Date.	Observers at— P.	Observers at— W. W.	From western or Portland signals.	From eastern or Walla Walla signals.	W—E	Mean of W. and E. signals.	Personal equation.	Difference of longitude $\Delta\lambda$	p.	v.
1887.			m. s.	m. s.	s.	m. s.	s.	m. s.		s.
Sept. 5	E. Smith.	C. H. Sinclair.	17 19·366	17 19·329	0·037	17 19·348	+0·104	17 19·452	2·5	−0·051
6			·409	·364	·045	·386		·490	2	− ·013
9			·437	·395	·042	·416		·520	2	+ ·017
10			·461	·418	·043	·440		·544	1	+ ·041
13			·448	·411	·037	·430		·534	2·5	+ ·031
				Mean	·041	17 19·404				
Sept. 15	C. H. Sinclair.	E. Smith.	17 19·711	17 19·686	·025	17 19·698	−0·104	·594	1	+ ·091
16			·630	·587	·043	·608		·504	5	+ ·001
19			·581	·538	·043	·560		·456	6	− ·047
21			·596	·562	·034	·579		·425	3	− ·028
22			·699	·671	·028	·685		·581	3·5	+0·078
				Mean	0·035	17 19·626		17 19·515		
				Weighted mean				17 19·503 ± 0s·011		

Transmission time: $0^s.019 \pm 0^s.001$.

Personal equation: Sm.— Sin.$= -0^s.111 \pm 0^s.013$; same from weighted means, $-0^s.104$.

At Portland, transit No. 4 was mounted over the station established in 1887 in the grounds of the custom-house.

At Walla Walla, transit No. 6 was mounted over the new 1887 station, located in the grounds of the court-house and on its east side. An old brick and stuccoed pier was found standing near by, but was not found of the proper shape or height for mounting transit No. 6 upon it. The new Coast and Geodetic Survey pier of 1887 is $4^m.42$ or $0^s.014$ *west* of the stuccoed pier, which latter may possibly be the one referred to in Capt. G. M. Wheeler's Tables of Geographical Positions, Engineer Department, U. S. A., Washington, D. C., 1885. It dates probably from 1878.

$\Delta\lambda$, Portland ($T_{1887\text{-}88}$) — Walla Walla ($T_{1887\ 88}$) $= 17^m\ 19^s.503 \pm 0^s.011$.

(37) DIFFERENCE OF LONGITUDE BETWEEN WALLA WALLA, WASH., AND SALT LAKE CITY, UTAH.

Date.	Observers at— W. W.	Observers at— S. L. C.	From western or Walla Walla signals.	From eastern or Salt Lake City signals.	W—E	Mean of W. and E. signals.	Personal equation.	Difference of longitude $\Delta\lambda$	p.	v.
1887.			m. s.	m. s.	s.	m. s.	s.	m. s.		s.
Sept. 28	C. H. Sinclair.	E. Smith.	25 48·422	25 48·197	0·225	25 48·310	—0·164	25 48·146	1	—0·040
Oct. 1			·439	·241	·198	·340		·176	5	— ·010
4			·494	·264	·230	·379		·215	4	+ ·029
11			·518	·294	·224	·406		·242	2·5	+ ·056
12			·421	·237	·184	·329		·165	8·5	— ·021
				Mean	·212	25 48·353				
Oct. 16	E. Smith.	C. H. Sinclair.	25 48·169	25 47·986	·183	25 48·078	+0·164	·242	3·5	+ ·056
17			·075	·881	·194	47·978		·142	2·5	— ·044
19			·097	47·892	·205	47·994		·158	7	— ·028
20			·219	48·008	·211	48·114		·278	2	+ ·092
22			·113	47·893	·220	48·003		·167	3·5	—0·019
				Mean	0·203	25 48·033		25 48·193		
				Weighted mean				25 48·186 ± 0s·009		

Transmission time: 0s·104 ± 0s·002.

Personal equation: Sm.—Sin. = — 0s·160 ± 0s.009; same from weighted means, — 0s·164.

At Walla Walla, transit No. 6 was mounted over the new 1887 station, located in the grounds of the court house and on the east side of it; an old brick and stuccoed pier was found standing, but was not of the proper shape and height for transit No. 6. The Coast and Geodetic Survey pier of 1887 is 4·42 metres or 0s·014 *west* of the old stuccoed pier, which latter dates probably from 1878 if it be the one referred to by Capt. G. M. Wheeler in his Tables of Geographical Positions, Engineer Department, U. S. A., Washington, 1885.

At Salt Lake City transit No. 4 was mounted over the old station in Temple block, southeast corner, established by Assistant G. W. Dean in 1869.

$\Delta\lambda$, Walla Walla ($T_{1887.88}$) — Salt Lake City ($T_{1869.90}$) = 25m 48s·186 ± 0s·009.

(38) DIFFERENCE OF LONGITUDE BETWEEN PORTLAND, OREG., AND SEATTLE, WASH.

Date.	Observers at— P.	Observers at— S.	From western or Portland signals.	From eastern or Seattle signals.	W—E	Mean of W. and E. signals.	Personal equation.	Difference of longitude $\Delta\lambda$	p.	v.
1888.			m. s.	m. s.	s.	m. s.	s.	m. s.		s.
June 12	R. A. Marr.	E. Smith.	1 22·347	1 22·308	0·039	1 22·328	+0·159	1 22·487	1·5	+0·001
21			·398	·378	·020	·388		·547	1·5	+ ·061
22			·337	·319	·018	·328		·487	2	+ ·001
24			·274	·256	·018	·265		·424	1·5	— ·062
				Mean	·024	1 22·327				
June 26	E. Smith.	R. A. Marr.	1 22·779	1 22·759	·020	1 22·769	—0·159	·610	2·5	+ ·124
28			·621	·595	·026	·608		·449	1	— ·037
29			·582	·570	·012	·576		·417	1	— ·069
July 5			·448	·431	·017	·440		·281	1	—0·205
				Mean	0·019	1 22·598		1 22·463		
				Weighted mean				1 22·486±0s·026		

Transmission time: 0s·011 ± 0s·001.

Personal equation: Sm. — M. = + 0s·136 ± 0s·020; same from weighted means, + 0s·159.

At Portland transit No. 19[1] was placed over the station established in 1887 in the grounds of the custom-house. The transit pier is 1″·177 or 0s·078 *west* of the custom-house cupola.

At Seattle transit No. 18* was mounted over the station established by J. J. Gilbert in 1886, in the grounds of the university at the break of the hill sloping down to the art building. The old station of 1871 in Jackson street has been entirely obliterated.

$\Delta\lambda$, Portland ($T_{1887.88}$) − Seattle ($T_{1886.88}$) = $1^m\ 22^s.486 \pm 0^s.026$.

(39) DIFFERENCE OF LONGITUDE BETWEEN SEATTLE, WASH., AND WALLA WALLA, WASH.

Date.	Observers at— S.	Observers at— W. W.	From western or Seattle signals.	From eastern or Walla Walla signals.	W—E	Mean of W. and E. signals.	Personal equation.	Difference of longitude $\Delta\lambda$	p.	v.
1888.			m. s.	m. s.	s.	m. s.	s.	m. s.		s.
Aug. 9	R. A. Marr.	E. Smith.	15 57.008	15 56.881	0.127	15 56.944	+0.124	15 57.068	2	+0.040
10			56.924	.836	.088	.880		57.004	5.5	− .024
11			.901	.823	.078	.862		56.986	5.5	− .042
12			.991	.866	.125	.928		57.052	5.5	+ .024
13			.987	.889	.098	.938		57.062	4	+ .034
				Mean	.103	15 56.910				
Aug. 15	E. Smith.	R. A. Marr.	15 57.210	15 57.078	.132	15 57.144	−0.124	57.020	5.5	− .008
16			.231	.144	.087	.188		57.064	5	+ .036
17			.241	.145	.096	.193		57.069	4	+ .041
18			.127	.068	.059	.097		56.973	5.5	−0.055
				Mean	0.093	15 57.156		15 57.033		
				Weighted mean				15 57.028 ± 0s.009		

Transmission time: $0^s.049 \pm 0^s.003$.

Personal equation: Sm. − M. = $+ 0^s.123 \pm 0^s.010$; same from weighted means, $+ 0^s.124$.

At Seattle transit No. 18 stood over the station established by J. J. Gilbert in 1886, in the grounds of the university.

At Walla Walla transit No. 19 was mounted over the 1887 station, in the grounds of the court-house.

$\Delta\lambda$, Seattle ($T_{1886.88}$) − Walla Walla ($T_{1887.88}$) = $15^m\ 57^s.028 \pm 0^s.009$.

(40) DIFFERENCE OF LONGITUDE BETWEEN WALLA WALLA, WASH., AND HELENA, MONT.

Date.	Observers at— W. W.	Observers at— H.	From western or Walla Walla signals.	From eastern or Helena signals.	W—E	Mean of W. and E. signals.	Personal equation.	Difference of longitude $\Delta\lambda$	p.	v.
1888.			m. s.	m. s.	s.	m. s.	s.	m. s.		s.
Aug. 25	E. Smith.	R. A. Marr.	25 14.664	25 14.596	0.068	25 14.630	−0.094	25 14.536	9	+0.026
26			.668	.617	.051	.642		.548	7	+ .038
27			.628	.584	.044	.606		.512	7	+ .002
28			.590	.551	.039	.571		.477	12	− .033
29			.618	.570	.048	.594		.500	11	− .010
				Mean	.050	25 14.609				
Sept. 1	R. A. Marr.	E. Smith.	25 14.472	25 14.441	.031	25 14.456	+0.094	.550	8	+ .040
2			.456	.400	.056	.428		.522	7	+ .012
5			.426	.389	.037	.408		.502	17	− .008
6			.397	.350	.047	.374		.468	6	− .042
7			.454	.364	.090	.409		.503	4	−0.007
				Mean	0.052	25 14.415		25 14.512		
				Weighted mean				25 14.510 ± 0s.006		

Transmission time: $0^s.026 \pm 0^s.002$.

Personal equation: Sm. − M. = $+ 0^s.097 \pm 0^s.002$; same from weighted means, $+ 0^s.094$.

* The new transits Nos. 18 and 19 were first used in May, 1888, at Yaquina and Portland, Oreg., and at every survey station connected with the longitude net since that date.

At Walla Walla transit No. 19 was mounted over the station of 1887, in the grounds of the court-house.

At Helena transit No. 18 was mounted on a brick pier located in 1888 in the grounds of the United States Assay Office. It is referred geodetically to the court-house.

$\Delta\lambda$, Walla Walla ($T_{1887\text{-}88}$) — Helena ($T_{1888\text{-}90}$) = $25^m\ 14^s\cdot510 \pm 0^s\cdot006$.

(41) DIFFERENCE OF LONGITUDE BETWEEN SAN FRANCISCO, CAL., AND SACRAMENTO, CAL.

Date.	Observers at— S. F.	Observers at— S.	From western or San Francisco signals.	From eastern or Sacramento signals.	W—E	Mean of W. and E. signals.	Personal equation.	Difference of longitude Δλ	p.	v.
1888–89.			m. s.	m. s.	s.	m. s.	s.	m. s.		s.
Dec. 18	R. A. Marr.	C. H. Sinclair.	3 44·269	3 44·241	0·028	3 44·255	+0·217	3 44·472	3	−0·011
27			·259	·240	·019	·250		·467	4	·016
28			·305	·274	·031	·290		·507	2	·024
Jan. 4			·295	·260	·035	·278		·495	4	·012
				Mean		3 44·268				
Jan. 6	C. H. Sinclair.	R. A. Marr.	3 44·754	3 44·697	* ·057	3 44·726	−0·217	·509	5	·026
7			·715	·690	·025	·702		·485	3	·002
11			·684	·589	* ·095	·636		·419	3·5	−·064
12			·754	·695	*0·059	·724		·507	3·5	+0·024
				Mean		3 44·697		3 44·483		
				Weighted mean				3 44·483 ± 0s·008		

Transmission time over the 94½ mile line: $0^s\cdot014 \pm 0^s\cdot001$.

*Transmission time over the 154½ mile line: $0.035 \pm 0\cdot004$.

Personal equation: S. — M. = $+ 0^s\cdot214 \pm 0\cdot010$; same from weighted means, $+ 0^s\cdot217$.

At San Francisco transit No. 18 was mounted on the eastern pier in the Lafayette Park Observatory. This pier is $0''\cdot064$ or $0^s\cdot004$ *east* of the west or standard pier of the observatory.

At Sacramento transit No. 19 was mounted over the station established here in 1888, in the grounds of the Capitol building and on the east side of it and a little south of its face.

$\Delta\lambda$, San Francisco Lafayette Park ($T_{1881\text{-}87}$) — Sacramento ($T_{1888\text{-}89}$) = $3^m\ 44^s\cdot487 \pm 0^s\cdot008$.

(42) DIFFERENCE OF LONGITUDE BETWEEN SACRAMENTO, CAL., AND LOS ANGELES, CAL.

Date.	Observers at— S.	Observers at— L. A.	From western or Sacramento signals.	From eastern or Los Angeles signals.	W—E	Mean of W. and E. signals.	Personal equation.	Difference of longitude Δλ	p.	v.
1889.			m. s.	m. s.	s.	m. s.	s.	m. s.		s.
Mch. 18	C. H. Sinclair.	R. A. Marr.	12 56·594	12 56·537	0·057	12 56·566	+0·273	12 56·839	14	+0·027
20			·520	·472	·048	·496		·769	4	−·043
21			·531	·474	·057	·502		·775	6	−·037
22			·570	·514	·056	·542		·815	5	+·003
				Mean	·054	12 56·527				
Mch. 29	R. A. Marr.	C. H. Sinclair.	12 57·075	12 56·987	·088	12 57·031	−0·273	·758	4	−·054
30			·079	57·025	·054	·052		·779	6	−·033
Apr. 3			·167	57·111	·056	·139		·866	5	+·054
6			·139	57·080	·059	·110		·837	6	+0·025
				Mean	0·064	12 57·083		12 56·805		
				Weighted mean				12 56·812±0s·010		

Transmission time: $0^s\cdot028 \pm 0^s\cdot001$.

Personal equation: S. — M. = $+ 0^s\cdot278 \pm 0^s\cdot012$; same from weighted mean, $+ 0^s\cdot273$.

At Sacramento transit No. 18 was mounted over the station established in 1888 on the east side of the Capitol building in the grounds a little south of the face of the building.

At Los Angeles transit No. 19 was mounted over the 1889 station in the grounds of the Normal School; the new station of 1892 is 10·62 metres or 0ˢ·028 *east* of it.

$\Delta\lambda$, Sacramento ($T_{1888\text{-}89}$) — Los Angeles (T_{1892}) = $12^{m}\ 56^{s}\cdot840 \pm 0^{s}\cdot010$.

(43) DIFFERENCE OF LONGITUDE BETWEEN SAN FRANCISCO, CAL., AND LOS ANGELES, CAL.

Date.	Observers at— S. F.	Observers at— L. A.	From western or San Francisco signals.	From eastern or Los Angeles signals.	W—E	Mean of W. and E. signals.	Personal equation.	Difference of longitude Δλ	p.	v.
1889.			m. s.	m. s.	s.	m. s.	s.	m. s.		s.
Apr. 15	R. A. Marr.	C. H. Sinclair.	16 41·539	16 41·452	0·087	16 41·496	—0·214	16 41·282	8	+0·032
16			·469	·383	·086	·426		·212	4	— ·038
17			·469	·401	·068	·435		·221	9	— ·029
18			·481	·401	·080	·441		·227	6	— ·023
22			·551	·459	·092	·505		·291	7	+ ·041
				Mean	·083	16 41·461				
Apr. 27	C. H. Sinclair.	R. A. Marr.	16 40·989	16 40·883	·106	16 40·936	+0·214	·150	3	— ·100
29			41·099	41·030	·069	41·064		·278	6	+ ·028
May 3			41·103	41·023	·080	41·063		·277	5	+ ·027
9			41·062	40·977	·085	41·020		·234	5	— ·016
13			41·100	41·005	·095	41·052		·266	4	+0·016
				Mean	0·087	16 41·027		16 41·244		
				Weighted mean				16 41·250 ± 0ˢ·009		

Transmission time: $0^{s}\cdot042 \pm 0^{s}\cdot001$.

Personal equation: S.— M.= $+ 0^{s}\cdot217 \pm 0^{s}\cdot012$; same from weighted means, $+ 0^{s}\cdot214$.

At San Francisco transit No. 18 was mounted in the Lafayette Park observatory, established by Assistant Davidson in 1881; there are two piers, the *west* pier being the one to which all longitude measures have been referred; the smaller east pier is $1^{m}\cdot575$ or $0''\cdot064$ or $0^{s}\cdot004$ distant from the other. In 1889 the transit stood on the east pier.

At Los Angeles transit No. 19 was placed over the 1889 station in the grounds of the Normal School; the new station of 1892 is 10·62 metres or $0^{s}\cdot028$ *east* of it.

$\Delta\lambda$, San Francisco, Lafayette Park ($T_{1881\text{-}87}$) — Los Angeles (T_{1892}) = $16^{m}\ 41^{s}\cdot282 \pm 0^{s}\cdot009$.

(44) DIFFERENCE OF LONGITUDE BETWEEN LOS ANGELES, CAL., AND NEEDLES, CAL.

Date.	Observers at— L. A.	Observers at— N.	From western or Los Angeles signals.	From eastern or Needles signals.	W—E	Mean of W. and E. signals.	Personal equation.	Difference of longitude Δλ	p.	v.
1889.			m. s.	m. s.	s.	m. s.	s.	m. s.		s.
May 22	R. A. Marr.	C. H. Sinclair.	14 37·052	14 37·005	0·047	14 37·028	—0·282	14 36·746	6	—0·010
23			36·996	36·956	·040	36·976		·694	8	— ·062
24			37·030	·988	·042	37·009		·727	6	— ·029
June 1			·014	36·976	·038	36·995		·713	6	— ·043
5			37·229	37·174	·055	37·202		·920	6	+ ·164
				Mean	·044	14 37·042				
June 7	C. H. Sinclair.	R. A. Marr.	14 36·439	14 36·396	·043	14 36·418	+0·282	·700	6	— ·056
8			·532	·491	·041	·511		·793	6	+ ·037
12			·504	·474	·030	·489		·771	4	+ ·015
13			·507	·459	·048	·483		·765	2	+ ·009
15			·549	·497	·052	·523		·805	3	+ ·049
16			·466	·432	·034	·449		·731	4	— ·025
				Mean	0·041	14 36·479		14 36·760		
				Weighted mean				14 36·756±0ˢ·016		

Transmission time: $0^s.021 \pm 0^s.001$.

Personal equation: S. — M. $= +0^s.282 \pm 0^s.018$; same from weighted means, $+0^s.282$.

At Los Angeles transit No. 19 was placed over the station of 1889 in the grounds of the Normal School; the new station of 1892 is 10·62 metres or $0^s.028$ east of it.

At Needles transit No. 18 was mounted over a station located in the inclosure surrounding the Catholic Church. It was established in 1889.

$\Delta\lambda$, Los Angeles (T_{1892}) — Needles ($T_{1889\text{-}95}$) $= 14^m\ 36^s.728 \pm 0^s.016$.

(45) DIFFERENCE OF LONGITUDE BETWEEN HELENA, MONT., AND SALT LAKE CITY, UTAH.

Date.	Observers at— H.	Observers at— S. L. C.	From western or Helena signals.	From eastern or Salt Lake City signals.	W — E	Mean of W. and E. signals.	Personal equation	Difference of longitude $\Delta\lambda$	p.	v.
1890.			m. s.	m. s.	s.	m. s.	s.	m. s.		s.
July 2			0 33·404	0 33·327	0·077	0 33·366	+0·245	0 33·611	1	+0·034
3			·378	·285	·093	·331		·576	3	— ·001
6	R. A. Marr.	C. H. Sinclair.	·358	·267	·091	·312		·557	4	— ·020
7			·346	·256	·090	·301		·546	3	— ·031
10			·411	·323	·088	·367		·612	4	+ ·035
				Mean	·088	0 33·335				
July 12			0 33·797	0 33·737	·060	0 33·767	−0·245	·522	6	— ·055
13			·791	·691	·100	·741		·496	8	— ·081
15	C. H. Sinclair.	R. A. Marr.	·867	·797	·070	·832		·587	10	+ ·010
21			·868	·765	·103	·816		·571	3	— ·006
22			·937	·858	·079	·898		·653	12	+0·076
				Mean	0·082	0 33·811		0 33·573		
				Weighted mean				0 33·577 ± 0s·013		

Transmission time: $0^s.043 \pm 0^s.002$.

Personal equation: S. — M. $= +0^s.238 \pm 0^s.010$; same from weighted means, $+0^s.245$.

At Helena transit No. 18 was mounted over the station of 1888, established that year in the northwest corner of the grounds of the assay office.

At Salt Lake City transit No. 19 stood over the old station pier, established in 1869 in the Temple Block.

$\Delta\lambda$, Helena ($T_{1888\text{-}90}$) — Salt Lake City ($T_{1869\text{-}90}$) $= 0^m\ 33^s.577 \pm 0^s.013$.

(46) DIFFERENCE OF LONGITUDE BETWEEN HELENA, MONT., AND BISMARCK, N. DAK.

Date.	Observers at— H.	Observers at— B.	From western or Helena signals.	From eastern or Bismarck signals.	W—E	Mean of W. and E. signals.	Personal equation.	Difference of longitude $\Delta\lambda$	p.	v.
1890.			m. s.	m. s.	s.	m. s.	s.	m. s.		s.
July 28			45 01·089	45 01·003	0·086	45 01·046	−0·239	45 00·807	9	−0·032
30			·116	01·035	·081	·076		·837	11	— ·002
Aug. 1			·084	00·986	·098	·035		·796	5	— ·043
3	C. H. Sinclair.	R. A. Marr.	·125	01·055	·070	·090		·851	6	+ ·012
4			·173	01·102	·071	·138		·899	7	+ ·060
				Mean	·081	45 01·077				
Aug. 6			45 00·498	45 00·427	·071	45 00·462	+0·239	·701	4	— ·138
8			·664	·575	·089	·619		·858	5	+ ·019
12			·730	·645	·085	·687		·926	3	+ ·087
13	R. A. Marr.	C. H. Sinclair.	·698	·605	·093	·651		·890	4	+ ·051
16			·654	·542	·112	·598		·837	4	−0·002
				Mean	0·090	45 00·603		45 00·840		
				Weighted mean				45 00·839 ± 0s·012		

Transmission time: 0ˢ·043 ± 0ˢ·001.

Personal equation: S. — M. = + 0ˢ·237 ± 0ˢ·014; same from weighted means, + 0ˢ·239.

At Helena transit No. 18 was mounted over the station established in 1888, in the northwest corner of the assay office grounds.

At Bismarck transit No. 19 was placed at a station in the grounds of the county court-house, selected by Assistant Marr in July, 1890.

$\Delta\lambda$, Helena ($T_{1888\text{-}90}$) — Bismarck (T_{1890}) = 45ᵐ 00ˢ·839 ± 0ˢ·012.

(47) DIFFERENCE OF LONGITUDE BETWEEN BISMARCK, N. DAK., AND MINNEAPOLIS, MINN.

Date	Observers at— B.	Observers at— M.	From western or Bismarck signals.	From eastern or Minneapolis signals.	W — E	Mean of W. and E. signals.	Personal equation.	Difference of longitude Δλ	p.	v.
1890.			m. s.	m. s.	s.	m. s.	s.	m. s.		s.
Aug. 20	C. H. Sinclair.	R. A. Marr.	30 11·354	30 11·300	0·054	30 11·327	—0·283	30 11·044	3	—0·036
21			·414	·345	·069	·380		·097	10	+ ·017
25			·344	·288	·056	·316		·033	4	— ·047
26			·416	·356	·060	·386		·103	8	+ ·023
27			·383	·319	·064	·351		·068	5	— ·012
				Mean	·061	30 11·352				
Aug. 28	R. A. Marr.	C. H. Sinclair.	30 10·818	30 10·753	·065	30 10·785	+0·283	·068	4	— ·012
29			·787	·721	·066	·754		·037	5	— ·043
30			·849	·749	·100	·799		·082	4	+ ·002
30			·880	·772	·108	·826		·109	5	+ ·029
31			·846	·776	·070	·811		·094	7	+0·014
				Mean	0·082	30 10·795		30 11·074		
				Weighted mean				30 11·080 ± 0ˢ·006		

Transmission time: 0ˢ·036 ± 0ˢ·002.

Personal equation: S. — M. = + 0ˢ·278 ± 0ˢ·006; same from weighted means, + 0ˢ·283.

At Bismarck transit No. 19 was mounted over the station of 1890, in the northwest corner of the grounds of the county court-house.

At Minneapolis transit No. 18 was mounted nearly over the 1873 station (*i. e.*, 15 cm. west of it) and upon the same piers. It is located in the grounds of the State university, on a small knoll.

$\Delta\lambda$, Bismarck (T_{1890}) — Minneapolis ($T_{1873\text{-}91}$) = 30ᵐ 11ˢ·080 ± 0ˢ·006.

(48) DIFFERENCE OF LONGITUDE BETWEEN CAPE MAY, N. J., AND ALBANY, N. Y.

Date.	Observers at— C. M.	Observers at— A.	From western or Cape May signals.	From eastern or Albany signals.	W — E	Mean of W. and E. signals.	Personal equation.	Difference of longitude. Δλ	p.	v.
1891.			m. s.	m. s.	s.	m. s.	s.	m. s.		s.
May 5	C. H. Sinclair.	G. R. Putnam.	4 43·272	4 43·150	0·122	4 43·211	—0·183	4 43·028	5	—0·047
7			·291	·247	·044	·269		·086	7	+ ·011
9			·396	·347	·049	·371		·188	5	+ ·113
10			·255	·206	·049	·230		·047	5	— ·028
18			·258	·201	·057	·230		·047	9	— ·028
				Mean	·064	4 43·262				
June 1	G. R. Putnam.	C. H. Sinclair.	4 42·980	4 42·885	·095	4 42·932	+0·183	·115	4	+ ·040
8			·957	·869	·088	·913		·096	7	+ ·021
9			·924	·841	·083	·882		·065	4	— ·010
10			·920	·836	·084	·878		·061	7	— ·014
11			·914	·818	·096	·866		·049	6	—0·026
				Mean	0·089	4 42·894		4 43·078		
				Weighted mean				4 43·075 ± 0ˢ·010.		

Transmission time: $0^s.038 \pm 0^s.003$.

Personal equation: S. — P. = $+ 0^s.184 \pm 0^s.011$; same from weighted means, $+ 0^s.183$.

At Cape May transit No. 19 was mounted over the old station of 1881. It is within the Pennsylvania Railroad grounds.

At Albany transit No. 18 was mounted over the old station established in 1858 in the grounds of the Dudley Astronomic Observatory (old site). This station is 18·63 metres, or $0''.818$ or $0^s.055$, *east* of the dome of the observatory.

$\Delta\lambda$, Cape May ($T_{1891-91}$) — Albany, Dudley Observatory, old site, (D) = $4^m 43^s.020 \pm 0^s.010$.

(49) DIFFERENCE OF LONGITUDE BETWEEN DETROIT, MICH., AND ALBANY, N. Y.

Date.	Observers at— D.	Observers at— A.	From western or Detroit signals.	From eastern or Albany signals.	W—E	Mean of W. and E. signals.	Personal equation.	Difference of longitude $\Delta\lambda$	p	v.
1891.			*m.* *s.*	*m.* *s.*	*s.*	*m.* *s.*	*s.*	*m.* *s.*		*s.*
June 23	G. R. Putnam.	C. H. Sinclair.	37 11·712	37 11·657	0·055	37 11·684	+0·134	37 11·818	1	−0·082
24			·784	·735	·049	·760		·894	7	— ·006
25			·848	·786	·062	·817		·951	3	+ ·051
26			·795	·743	·052	·769		·903	5	+ ·003
27			·782	·721	·061	·752		·886	3	— ·014
				Mean	·056	37 11·756				
June 29	C. H. Sinclair.	G. R. Putnam.	37 12·061	37 12·004	·057	37 12·032	−0·134	·898	11	— ·002
July 4			·043	11·993	·050	·018		·884	3	— ·016
9			·048	11·991	·057	·019		·885	2	— ·015
10			·079	12·018	·061	·049		·915	3	+ ·015
11			·090	12·037	·053	·064		·930	2	+0·030
				Mean	0·056	37 12·036		37 11·896		
				Weighted mean				37 11·900 ± 0s·005		

Transmission time: $0^s.028 \pm 0^s.001$.

Personal equation: S. — P. = $+ 0^s.140 \pm 0^s.008$; same from weighted means, $+ 0^s.134$.

At Detroit transit No. 19 was placed at a new station established in 1891, back of the building at the northeast corner of Grand River and Washington avenues. The old United States Lake Survey Observatory on Grand River avenue, near Park place (Professional Papers, Corps of Engineers, U. S. A., No. 24, Washington, D. C., 1882), was destroyed to make room for a new building; the old piers being still in position, transit of 1891 was found to be 125·74 metres, or $0^s.366$, *east* of the Lake Survey station.

At Albany transit No. 18 was over the old station established in 1858 in the grounds of the Dudley Observatory (old site); the station is 18·63 metres, or $0^s.055$, *east* of the center of the dome of the observatory.

$\Delta\lambda$, Detroit (T_{1891})—Albany, Dudley Observatory, old site, (D) = $37^m 11^s.845 \pm 0^s.005$.

(50) DIFFERENCE OF LONGITUDE BETWEEN CHICAGO, ILL., AND DETROIT, MICH.

Date.	Observers at— C.	D.	From western or Chicago signals.	From eastern or Detroit signals.	W—E	Mean of W. and E. signals.	Personal equations.	Difference of longitude Δλ	p.	v.
1891.			m. s.	m. s.	s.	m. s.	s.	m. s.		s.
July 16	G. R. Putnam.	C. H. Sinclair.	18 17·490	18 17·446	0·044	18 17·468	+0·168	18 17·636	5	+0·002
18			·471	·433	·038	·452		·620	5	— ·014
19			·491	·447	·044	·469		·637	5	+ ·003
20			·506	·466	·040	·486		·654	6	+ ·020
22			·454	·425	·029	·440		·608	3	— ·026
				Mean	·039	18 17·463				
July 23	C. H. Sinclair.	G. R. Putnam.	18 17·805	18 17·770	·035	18 17·788	−0·168	·620	3	— ·014
24			·840	·807	·033	·824		·656	4	+ ·022
25			·878	·851	·027	·864		·696	2	+ ·062
27			·818	·779	·039	·798		·630	5	— ·004
28			·781	·744	·037	·762		·594	4	−0·040
				Mean	0·034	18 17·807		18 17·635		
					Weighted mean			18 17·634 ± 0s·006		

Transmission time: 0s·018 ± 0s·001.

Personal equation: S.—P. = +0s·172 ± 0·006; same from weighted means, +0s·168.

At Chicago transit No. 18 was mounted at the station of 1891 in the grounds of the Chicago city water works, foot of Chicago avenue. It is 2s·252 *west* of the old station of 1883, in the grounds of the Chicago University, old site.

At Detroit transit No. 19 was placed over the new station of 1891, back of the building at the northeast corner of Grand River and Washington avenues. The piers of the old United States lake survey station of 1871 were about to be removed. The 1891 station is 125·74 metres or 0s·366 *east* of the old longitude pier.

$\Delta\lambda$, Chicago (T_{1891})—Detroit (T_{1891}) = 18m 17s·634 ± 0s·006.

(51) DIFFERENCE OF LONGITUDE BETWEEN MINNEAPOLIS, MINN., AND CHICAGO, ILL.

Date.	Observers at— M.	C.	From western or Minneapolis signals.	From eastern or Chicago signals.	W—E	Mean of W. and E. signals.	Personal equation.	Difference of longitude Δλ	p.	v.
1891.			m. s.	m. s.	s.	m. s.	s.	m. s.		s.
Aug. 3	G. R. Putnam.	C. H. Sinclair.	22 27·263	22 27·206	0·057	22 27·234	+0·159	22 27·393	8	−0·021
5			·332	·270	·062	·301		·460	6	+ ·046
6			·246	·197	·049	·222		·381	6	— ·033
7			·293	·239	·054	·266		·425	8	+ ·011
14			·278	·237	·041	·257		·416	5	+ ·002
				Mean	·053	22 27·256				
Aug. 16	C. H. Sinclair.	G. R. Putnam.	22 27·628	22 27·585	·043	22 27·606	−0·159	·447	3	+ ·033
18			·545	·495	·050	·520		·361	4	— ·053
20			·552	·492	·060	·522		·363	9	— ·051
24			·616	·569	·047	·592		·433	8	+ ·019
25			·687	·620	·067	·654		·495	5	+0·081
				Mean	0·053	22 27·579		22 27·417		
					Weighted mean			22 27·414 ± 0s·010		

Transmission time: 0s·026 ± 0s·001.

Personal equation: S. — P. = + 0s·161 ± 0·010; same from weighted means, +0s·159.

At Minneapolis transit No. 19 was placed on the old stone piers of the 1873 and 1890 station, in the grounds of the university, south of the main building. It is within 15 cm. of the first station established in 1873.

At Chicago transit No. 18 stood at the station established in 1891 in the grounds of the Chicago city water works, foot of Chicago avenue. It is $2^{s}\cdot252$ *west* of the old station of 1883, in the grounds of the university, now removed.

$$\Delta\lambda, \text{Minneapolis } (T_{1873\text{-}90\text{-}91}) - \text{Chicago } (T_{1891}) = 22^{m}\ 27^{s}\cdot414 \pm 0^{s}\cdot010.$$

(52) DIFFERENCE OF LONGITUDE BETWEEN OMAHA, NEBR., AND MINNEAPOLIS, MINN.

Date.	Observers at— O.	Observers at— M.	From western or Omaha signals.	From eastern or Minneapolis signals.	W—E	Mean of W. and E. signals.	Personal equation.	Difference of longitude $\Delta\lambda$	p.	v.
1891.			*m.* *s.*	*m.* *s.*	*s.*	*m.* *s.*	*s.*	*m.* *s.*		*s.*
Aug. 29	G. R. Putnam.	C. H. Sinclair.	10 49·113	10 49·069	0·044	10 49·091	+0·180	10 49·271	7	+0·002
30			·081	·049	·032	·065		·245	5	— ·024
31			·115	·059	·056	·087		·267	8	— ·002
Sept. 3			·110	·062	·048	·086		·266	4	— ·003
4			·147	·090	·057	·119		·299	5	+ ·030
				Mean	·047	10 49·090				
Sept. 8	C. H. Sinclair.	G. R. Putnam.	10 49·516	10 49·467	·049	10 49·492	—0·180	·312	12	+ ·043
10			·450	·401	·049	·426		·246	7	— ·023
12			·522	·478	·044	·500		·320	5	+ ·051
13			·478	·440	·038	·459		·279	12	+ ·010
14			·369	·320	·049	·344		·164	7	—0·105
				Mean	0·046	10 49·444		10 49·267		
				Weighted mean				10 49·269 ± 0·010		

Transmission time: $0^{s}\cdot023 \pm 0^{s}\cdot001$.

Personal equation: S.—P. $= +0^{s}\cdot177 \pm 0^{s}\cdot011$; same from weighted means, $+0^{s}\cdot180$.

At Omaha transit No. 18 was placed on the old stone piers of 1882, in the southeastern part of the grounds of the Omaha high school. The first station established here was in 1869, in the same grounds, then known as Capitol Square. The several stations of 1869, 1873, 1882, and 1891 are all in the same meridian.

At Minneapolis transit No. 19 was located in the grounds of the university. It is the same as that of 1890, and within 15 cm. the same as the old station of 1873.

$$\Delta\lambda, \text{Omaha } (T_{1869\text{-}73\text{-}82\text{-}91}) - \text{Minneapolis } (T_{1873\text{-}90\text{-}91}) = 10^{m}\ 49^{s}\cdot269 \pm 0^{s}\cdot010.$$

(53) DIFFERENCE OF LONGITUDE BETWEEN LOS ANGELES, CAL., AND SAN DIEGO, CAL.

Date.	Observers at— L. A.	Observers at— S. D.	From western or Los Angeles signals.	From eastern or San Diego signals.	W—E	Mean of W. and E. signals.	Personal equation.	Difference of longitude $\Delta\lambda$	p.	v.
1892.			*m.* *s.*	*m.* *s.*	*s.*	*m.* *s.*	*s.*	*m.* *s.*		*s.*
Feb. 9	C. H. Sinclair.	G. R. Putnam.	4 22·899	4 22·881	0·018	4 22·890	—0·167	4 22·723	3	—0·063
10			·967	·950	·017	·958		·791	3	+ ·005
11			·959	·936	·023	·948		·781	3	— ·005
14			·968	·947	·021	·958		·791	3	+ ·005
15			·995	·970	·025	·982		·815	6	+ ·029
				Mean	·021	4 22·947				
Feb. 16	G. R. Putnam.	C. H. Sinclair.	4 22·572	4 22·543	·029	4 22·558	+0·167	·725	7	— ·061
26			·603	·595	·008	·599		·766	6	— ·020
Mch. 2			·675	·651	·024	·663		·830	3	+ ·044
3			·695	·667	·028	·681		·848	6	+ ·062
5			·644	·623	·021	·634		·801	4	+0·015
				Mean	0·022	4 22·627		4 22·787		
				Weighted mean				4 22·786 ± 0·010		

Transmission time: $0^s.011 \pm 0^s.001$.

Personal equation: S.— P.$= +0^s.160 \pm 0^s.006$; same from weighted means, $+0^s.167$.

At Los Angeles transit No. 19 was mounted over the new station of 1892, near the old one of 1889, in the grounds of the Normal School. The 1892 station is $10^m.62$ or $0^s.028$ *east* of the old station.

At San Diego transit No. 18 was placed at a new station established in the southwest part of the City Park (in line with the center of Seventh street). This station is at a commanding height and is 17·45 metres or $0^s.045$ *west* of the old or 1871 station.

$\Delta\lambda$, Los Angeles (T_{1892}) — San Diego (T_{1892}) $= 4^m\ 22^s.786 \pm 0^s.010$.

(54) DIFFERENCE OF LONGITUDE BETWEEN SAN DIEGO, CAL., AND YUMA, ARIZ.

Date.	Observers at— S. D.	Observers at— Y.	From western or San Diego signals.	From eastern or Yuma signals.	W — E	Mean of W. and E. signals.	Personal equation.	Difference of longitude Δλ	p.	v.
1892.			m. s.	m. s.	s.	m. s.	s.	m. s.		s.
Mch. 15	C. H. Sinclair.	G. R. Putnam.	10 09·383	10 09·326	0·057	10 09·354	—0·190	10 09·164	2	+0·050
16			·333	·241	·092	·287		·097	4	— ·017
17			·305	·252	·053	·279		·089	3	— ·025
19			·322	·262	·060	·292		·102	8	— ·012
20			·357	·287	·070	·322		·132	3	+ ·018
21			·363	·310	·053	·336		·146	3	+ ·032
				Mean	0·064	10 09·312				
Mch. 23	G. R. Putnam.	C. H. Sinclair.	10 08·959	10 08·875	0·084	10 08·917	+0·190	·107	6	— ·007
24			·937	·864	·073	·900		·090	5	— ·024
25			·942	·899	·043	·920		·110	4	— ·004
26			·960	·917	·043	·938		·128	3	+ ·014
29			·999	·920	·079	·960		·150	4	+0·036
				Mean	0·064	10 08·927		10 09·120		
				Weighted mean				10 09·114 ± 0s·005		

Transmission time: $0^s.032 \pm 0^s.002$.

Personal equation: S. — P. $= +0^s.192 \pm 0^s.004$; same from weighted means, $+0^s.190$.

At San Diego transit No. 18 was mounted at the new station; it is located in the southwest part of the City Park and on a commanding height. The 1892 station is *west* of that of 1871, $0^s.045$.

At Yuma transit No. 19 was set in an adobe building on north side of corral in the Government Reservation.

$\Delta\lambda$, San Diego (T_{1892}) — Yuma (T_{1892}) $= 10^m\ 09^s.114 \pm 0^s.005$.

(55) DIFFERENCE OF LONGITUDE BETWEEN LOS ANGELES, CAL., AND YUMA, ARIZ.

Date.	Observers at— L. A.	Observers at— Y.	From western or Los Angeles signals.	From eastern or Yuma signals.	W—E	Mean of W. and E. signals.	Personal equation.	Difference of longitude Δλ	p.	v.
1892.			m. s.	m. s.	s.	m. s.	s.	m. s.		s.
Mch. 31	G. R. Putnam.	C. H. Sinclair.	14 31·897	14 31·847	0·050	14 31·872	+0·141	14 32·013	4	+0·039
Apr. 2			·857	·826	·031	·842		31·983	4	+ ·009
3			·843	·812	·031	·827		31·968	5	— ·006
4			·816	·793	·023	·804		31·945	5	— ·029
				Mean	·034	14 31·836				
Apr. 6	C. H. Sinclair.	G. R. Putnam.	14 32·146	14 32·112	·034	14 32·129	—0·141	31·988	3	+ ·014
7			·099	·068	·031	·084		31·943	4	— ·031
8			·143	·083	·060	·113		31·972	9	— ·002
9			·161	·129	·032	·145		32·004	3	+0·030
				Mean	0·039	14 32·118		14 31·977		
				Weighted mean				14 31·974 ± 0s·006		

Transmission time: $0^{s}\cdot018 \pm 0^{s}\cdot007$.

Personal equation: S. — P. $= +0^{s}\cdot141 \pm 0^{s}\cdot002$; same from weighted means, $+0^{s}\cdot141$.

At Los Angeles transit No. 18 was mounted at the new station, near the old one of 1889 in the grounds of the Normal School; the 1892 station is *east* of the 1889 station 10·62 metres or $0^{s}\cdot028$.

At Yuma transit No. 19 was set up in an adobe building on north side of corral in the Government Reservation.

$\Delta\lambda$, Los Angeles (T_{1892}) — Yuma (T_{1892}) $= 14^{m}\ 31^{s}\cdot974 \pm 0^{s}\cdot006$.

(56) DIFFERENCE OF LONGITUDE BETWEEN YUMA, ARIZ., AND NOGALES, ARIZ.

Date.	Observers at— Y.	Observers at— N.	From western or Yuma signals.	From eastern or Nogales signals.	W — E	Mean of W. and E. signals.	Personal equation.	Difference of longitude $\Delta\lambda$	p.	v.
1892.			*m.* *s.*	*m.* *s.*	*s.*	*m.* *s.*	*m.*	*m.* *s.*		*s.*
Apr. 13	C. H. Sinclair.	G. R. Putnam.	14 43·891	14 43·819	0·072	14 43·855	—0·152	14 43·703	4	+0·013
14			·815	·747	·068	·781		·629	5	— ·061
15			·864	·801	·063	·832		·680	4	— ·010
16			·902	·828	·074	·865		·713	6	+ ·023
17			·938	·813	·125	·876		·724	5	+ ·034
				Mean	0·080	14 43·842				
Apr. 19	G. R. Putnam.	C. H. Sinclair.	14 43·566	14 43·488	0·078	14 43·527	+0·152	·679	3	— ·011
20			·580	·445	·135	·512		·664	7	— ·026
21			·618	·528	·090	·573		·725	4	+ ·035
22			·590	·496	·094	·543		·695	3	+ ·005
23			·597	·505	·092	·551		·703	4	+ ·013
				Mean	0·098	14 43·541		14 43·692		
				Weighted mean				14 43·690 ± 0s·007		

Transmission time: $0^{s}\cdot045 \pm 0^{s}\cdot003$.

Personal equation: S. — P. $= +0^{s}\cdot150 \pm 0^{s}\cdot005$; same from weighted means, $+0^{s}\cdot152$.

At Yuma the station was located in an adobe building on north side of corral in the Government Reservation. Transit No. 19 was mounted here.

At Nogales transit No. 18 was mounted at the station in the rear of and adjoining the Montezuma Hotel and Custom-house; station established in 1892.

$\Delta\lambda$, Yuma (T_{1892}) — Nogales (T_{1892}) $= 14^{m}\ 43^{s}\cdot690 \pm 0^{s}\cdot007$.

(57) DIFFERENCE OF LONGITUDE BETWEEN NOGALES, ARIZ., AND EL PASO, TEX.

Date.	Observers at— N.	Observers at— E. P.	From western or Nogales signals.	From eastern or El Paso signals.	W—E	Mean of W. and E. signals.	Personal equation.	Difference of longitude $\Delta\lambda$	p.	v.
1892.			*m.* *s.*	*m.* *s.*	*s.*	*m.* *s.*	*s.*	*m.* *s.*		*s.*
Apr. 29	C. H. Sinclair.	G. R. Putnam.	17 48·758	17 48·700	0·058	17 48·729	—0·125	17 48·604	3	+0·084
30			·630	·553	·077	·592		·467	4	— ·053
May 1			·677	·624	·053	·651		·526	4	+ ·006
2			·673	·616	·057	·645		·520	4	·000
4			·670	·604	·066	·637		·512	7	— ·008
				Mean	·062	17 48·651				
May 6	G. R. Putnam.	C. H. Sinclair.	17 48·469	17 48·399	·070	17 48·434	+0·125	·559	4	+ ·039
7			·375	·298	·077	·336		·461	6	— ·059
8			·440	·370	·070	·405		·530	5	+ ·010
9			·466	·391	·075	·429		·554	5	+ ·034
10			·431	·350	·081	·391		·516	6	—0·004
				Mean	0·075	17 48·399		17 48·525		
				Weighted mean				17 48·520±0s·009		

Transmission time: $0^s.034 \pm 0^s.001$.

Personal equation: S. — P. $= + 0^s.126 \pm 0^s.004$; same from weighted means, $+ 0^s.125$.

At Nogales transit No. 18 was mounted at a station in the rear of and adjoining Montezuma Hotel and custom-house; it is east of the boundary monument 171·7 meters or $0^s.433$.

At El Paso transit No. 19 was set up over the station established in 1892, in the United States Military Reservation, due west from the plaza.

$$\Delta\lambda, \text{ Nogales } (T_{1892}) - \text{El Paso } (T_{1892\text{-}93\text{-}95}) = 17^m\ 48^s.520 \pm 0^s.009.$$

[Fourth cable connection with Europe.*]

(58) DIFFERENCE OF LONGITUDE BETWEEN MONTREAL, CANADA, AND GREENWICH, ENGLAND, VIA CANSO, NOVA SCOTIA, AND WATERVILLE, IRELAND.

Executed by Prof. C. H. McLeod, of McGill University, and Mr. H. H. Turner, of the Greenwich observatory.

Of this important addition to the longitude system of North America only a preliminary account has as yet been published,† giving the preliminary results:

	h.	*m.*	*s.*	
Montreal to Canso	0	49	37·4	Total $4^h\ 54^m\ 18^s.7$.
Canso to Waterville	3	24	32·0	
Waterville to Greenwich	0	40	09·3	

From a reply by Professor McLeod dated May 15, 1897, to an inquiry about the longitude work, it would appear that a considerable time must yet elapse before the final results could be had in print, and since it was undesirable to hold back the computations and publication of the present report, this office has availed itself of the final result kindly communicated by Professor McLeod,‡ viz: $4^h\ 54^m\ 18^s.67$. The probable error of this result, however, could not be given; it has, therefore, been estimated, for which see reduction further on.

*The following letter was received after the report had been completed; the difference in the estimated probable error ($\pm 0^s.03$) and that assigned by the observer ($\pm 0^s.015$) will not materially affect the resulting longitudes.

McGILL COLLEGE OBSERVATORY,
Montreal, August 2, 1897.

DEAR SIR: Referring to your letter of April 26, last.—The probable error of our trans-Atlantic longitude determination, which depends on twelve nights at Greenwich and Montreal, will not exceed $0^s.016$. The result, $4^h\ 54^m\ 18^s.67$, is not in any way dependent upon the intermediate stations. The longitude of the station at Waterville, Ireland, is $40^m\ 41^s.305 \pm 0^s.013$, and the longitude of Hazel Hill, Nova Scotia, is $4^h\ 04^m\ 07^s.30 \pm 0^s.05$. The latter depends on a somewhat incomplete series of observations for one-half of the work, the weather having been bad at the cable stations during the early part of the work.

Yours very truly,

C. H. McLEOD.

W. W. DUFFIELD, Esq.,
Superintendent United States Coast and Geodetic Survey.

†Transactions Royal Society of Canada, 1893, section III, p. 51. Memorandum on the work of the Montreal longitude determination, by Prof. C. H. McLeod, Superintendent McGill College observatory.

‡In a letter of April 17, 1897.

(59) DIFFERENCE OF LONGITUDE BETWEEN EL PASO, TEX., AND LITTLE ROCK, ARK.

Date.	Observers at— E. P.	Observers at— L. R.	From western or El Paso signals.	From eastern or Little Rock signals.	W—E	Mean of W. and E. signals.	Personal equation.	Difference of longitude $\Delta\lambda$	$p.$	$v.$
1893.			*m.* *s.*	*m.* *s.*	*s.*	*m.* *s.*	*s.*	*m.* *s.*		*s.*
Feb. 25	G. R. Putnam.	C. H. Sinclair.	56 51·649	56 51·453	0·196	56 51·551	+0·080	56 51·631	3	−0·050
27			·677	·505	·172	·591		·671	6	— ·010
Mch. 4			·691	·496	·195	·594		·674	1	— ·007
5			·648	·455	·193	·552		·632	2	— ·049
8			·752	·582	·170	·667		·747	5	+ ·066
				Mean	·185	56 51·591				
Mch. 11	C. H. Sinclair.	G. R. Putnam.	56 51·844	56 51·670	·174	56 51·757	−0·080	·677	3	— ·004
12			·795	·604	·191	·700		·620	3	— ·061
13			·850	·665	·185	·758		·678	8	— ·003
15			·906	·705	·201	·806		·726	6	+ ·045
18			·846	·653	·193	·750		·670	4	−0·011
				Mean	0·189	56 51·754		56 51·673		
				Weighted mean				56 51·681 ± 0ˢ·009		

Transmission time: 0ˢ·094 ± 0ˢ·001.

Personal equation: S. — P. = + 0ˢ·082 ± 0ˢ·010; same from weighted means, + 0ˢ·080.

At El Paso transit No. 18 was set up over the old station of 1892 in the United States Military Reservation, west of the plaza.

At Little Rock transit No. 19 was mounted over the old station of 1885 in the southwest corner of the post-office and custom-house block.

$\Delta\lambda$, El Paso ($T_{1892\text{-}93\text{-}95}$) — Little Rock ($T_{1885\text{-}93\text{-}96}$) = 56ᵐ 51ˢ·681 ± 0ˢ·009.

(60) DIFFERENCE OF LONGITUDE BETWEEN NEEDLES, CAL., AND SANTA FÉ, N. MEX.

Date.	Observers at— N.	Observers at— S. F.	From western or Needles signals.	From eastern or Santa Fé signals.	W—E	Mean of W. and E. signals.	Personal equation.	Difference of longitude $\Delta\lambda$	$p.$	$v.$
1895.			*m.* *s.*	*m.* *s.*	*s.*	*m.* *s.*	*s.*	*m.* *s.*		*s.*
Feb. 8	C. H. Sinclair.	E. Smith.	34 38·140	34 38·067	0·073	34 38·104	−0·090	34 38·014	3	−0·018
17			·218	·146	·072	·182		38·092	6	+ ·060
18			·101	·042	·059	·072		37·982	2	— ·050
22			·067	·004	·063	·036		37·946	5	— ·086
27			·204	·126	·078	·165		38·075	5	+ ·043
				Mean	·069	34 38·112				
Mar. 4	E. Smith.	C. H. Sinclair.	34 37·863	34 37·795	·068	34 37·829	+0·090	37·919	1½	— ·113
7			37·968	·892	·076	·930		38·020	1½	— ·012
8			38·011	·903	·108	·957		38·047	3	+ ·015
9			37·961	·878	·083	·920		38·010	3	— ·022
10			38·033	·955	·078	·994		38·084	4	+0·052
				Mean	0·083	34 37·926		34 38·019		
				Weighted mean				34 38·032 ± 0ˢ·013		

Transmission time: 0ˢ·038 ± 0ˢ·001.

Personal equation: Sm. — Sin. = — 0ˢ·093 ± 0ˢ·011; same from weighted means, — 0ˢ·090.

At Needles transit No. 18 was mounted over the old pier of 1889, within the enclosure of the Catholic church.

At Santa Fé transit No. 19 was mounted over the old station of 1873 and 1886, in the grounds of the Fort Marcy Military Reservation.

$\Delta\lambda$, Needles ($T_{1889\text{-}95}$) — Santa Fé ($T_{1873\text{-}86\text{-}95}$) = 34ᵐ 38ˢ·032 ± ˢ·013.

(61) DIFFERENCE OF LONGITUDE BETWEEN EL PASO, TEX., AND SANTA FÉ, N. MEX.

Date.	Observers at— E. P.	Observers at— S. F.	From western or El Paso signals.	From eastern or Santa Fé signals.	W−E	Mean of W. and E. signals.	Personal equation.	Difference of longitude Δλ	p.	v.
1895.			m. s.	m. s.	s.	m. s.	s.	m. s.		s.
Mch. 15	E. Smith.	C. H. Sinclair.	2 10·520	2 10·467	0·053	2 10·494	+0·074	2 10·568	5	−0·025
16			·510	·463	·047	·486		·560	3	− ·033
19			·539	·484	·055	·512		·586	3	− ·007
21			·574	·521	·053	·548		·622	6	+ ·029
22			·557	·513	·044	·535		·609	4	+ ·016
				Mean	·050	2 10·515				
Mch. 24	C. H. Sinclair.	E. Smith.	2 10·749	2 10·711	·038	2 10·730	−0·074	·656	7	+ ·063
25			·721	·664	·057	·693		·619	7	+ ·026
26			·694	·640	·054	·667		·593	5	·000
27			·647	·586	·061	·617		·543	7	− ·050
28			·666	·567	* ·099	·617		·543	5	−0·050
				Mean	0·052	2 10·665		2 10·590		
				Weighted mean				2 10·593 ± 0s·009		

* Repeater in line, result qmitted from mean.

Transmission time: 0s·026 ± 0s·001.

Personal equation: Sm.— Sin.= —0s·075 ± 0s·011; same from weighted means, —0s·074.

At El Paso transit No. 18 was mounted over the old station of 1892 and 1893 in the United States Military Reservation, west of the plaza.

At Santa Fé transit No. 19 was mounted over the old station of 1886 in the grounds of Fort Marcy Military Reservation. The station is the same as established by the United States Engineers in 1873.

$\Delta\lambda$, El Paso ($T_{1892\ 93\text{-}95}$)—Santa Fé ($T_{1873\ 86\text{-}95}$)= 2m 10s·593 ± 0s·009.

(62) DIFFERENCE OF LONGITUDE BETWEEN EL PASO, TEX., AND AUSTIN, TEX.

Date.	Observers at— E. P.	Observers at— A.	From western or El Paso signals.	From eastern or Austin signals.	W−E	Mean of W. and E. signals.	Personal equation.	Difference of longitude Δλ	p.	v.
1895.			m. s.	m. s.	s.	m. s.	s.	m. s.		s.
Apr. 7	E. Smith.	C. H. Sinclair.	35 00·484	35 00·322	0·162	35 00·403	−0·086	35 00·317	11	−0·005
8			·469	·327	·142	·398		·312	12	− ·010
9			·460	·340	·120	·400		·314	9	− ·008
10			·501	·353	·148	·427		·341	12	+ ·019
11			·488	·335	·153	·412		·326	2	+ ·004
				Mean	·145	35 00·408				
Apr. 16	C. H. Sinclair.	E. Smith.	35 00·272	35 00·100	·172	35 00·186	+0·086	·272	4	− ·050
17			·311	·148	·163	·230		·316	3	− ·006
18			·381	·176	·205	·278		·364	4	+ ·042
20			·325	·153	·172	·239		·325	7	+ ·003
21			·311	·173	·138	·242		·328	4	+0·006
				Mean	0·170	35 00·235		35 00·322		
				Weighted mean				35 00·322 ± 0s·004		

Transmission time: 0s·079 ± 0s·003.

Personal equation: Sm.— Sin.= —0s·086 ± 0s·005; same from weighted means, —0s·086.

At El Paso the station is identical with that of 1892 and 1893. It is on the United States Military Reservation, due west of the plaza. Transit No. 18 was mounted here.

At Austin transit No. 19 was mounted over the new station of 1895, in the capitol grounds and east of the building.

$\Delta\lambda$, El Paso ($T_{1892\text{-}93\ 95}$) — Austin (T_{1895}) = 35m 00s·322 ± 0s·004.

(63) DIFFERENCE OF LONGITUDE BETWEEN AUSTIN, TEX., AND GALVESTON, TEX.

Date.	Observers at— A.	Observers at— G.	From western or Austin signals.	From eastern or Galveston signals.	W—E	Mean of W. and E. signals.	Personal equation.	Difference of longitude $\Delta\lambda$	p.	v.
1895.			m. s.	m. s.	s.	m. s.	s.	m. s.		s.
May 26	E. Smith.	G. R. Putnam.	11 47·141	11 47·086	0·055	11 47·113	−0·023	11 47·090	5	+0·003
31			·152	·106	·046	·129		·106	10	+ ·019
June 1			·109	·088	·021	·098		·075	4	− ·012
2			·112	·074	·038	·093		·070	5	− ·017
3			·105	·081	·024	·093		·070	4	− ·017
				Mean	·037	11 47·105				
June 5	G. R. Putnam.	E. Smith.	11 47·067	11 47·021	·046	11 47·044	+0·023	·067	7	− ·020
6			·065	·005	·060	·035		·058	5	− ·029
12			·114	·043	·071	·079		·102	7	+ ·015
13			·097	·049	·048	·073		·096	7	+ ·009
16			·109	·055	·054	·082		·105	6	+0·018
				Mean	0·056	11 47·063		11 47·084		
				Weighted mean				11 47·087 ± 0s·004		

Transmission time: 0s·023 ± 0s·002.

Personal equation: Sm. − P. = +0s·021 ± 0s·006; same from weighted means, +0s·023.

At Austin transit No. 19 was mounted over the new station of 1895 in the capitol grounds, east of the building.

At Galveston a new station was established in 1895, at which transit No. 18 was mounted. It is near the middle of the north side of the Ball High School square, and is connected by triangulation with former stations as follows: Station of 1868 *east* of north tower of cathedral 94·81 metres, or 0s·234; station of 1885 *west* of same 71m·49, or 0s·177; station of 1895 *west* of same 50m·66, or 0s·125.

$\Delta\lambda$, Austin (T_{1895}) − Galveston (T_{1895}) = 11m47s·087 ± 0s·004.

(64) DIFFERENCE OF LONGITUDE BETWEEN AUSTIN, TEX., AND NEW ORLEANS, LA.

Date.	Observers at— A.	Observers at— N. O.	From western or Austin signals.	From eastern or New Orleans signals.	W—E	Mean of W. and E. signals.	Personal equation.	Difference of longitude $\Delta\lambda$	p.	v.
1895.			m. s.	m. s.	s.	m. s.	s.	m. s.		s.
June 23	G. R. Putnam.	E. Smith.	30 40·097	30 40·039	0·058	30 40·068	+0·023	30 40·091	4	−0·139
25			·248	·177	·071	·212		·235	4	+ ·005
27			·238	·185	·053	·212		·235	5	+ ·005
				Mean	0·061	30 40.164				
July 8	G. R. Putnam.	A. T. Mosman.	30 40·403	30 40·310	0·093	30 40·356	−0·066	·290	4	+ ·060
10			·302	·226	·076	·264		·198	3	− ·032
13			·357	·296	·061	·326		·260	4	+ ·030
14			·345	·296	·049	·320		·254	3	+ ·024
15			·324	·258	·066	·291		·225	15	− ·005
				Mean	0·069	30 40·311				
July 23	A. T. Mosman.	G. R. Putnam.	30 40·253	30 40·153	0·100	30 40·203	+0·066	·269	6	+ ·039
24			·264	·181	·083	·222		·288	7	+ ·058
27			·161	·097	·064	·129		·195	8	− ·035
28			·174	·107	·067	·140		·206	5	− ·024
				Mean	0·078	30 40·174		30 40·229		
				Weighted mean				30 40·230 ± 0s·010		

Transmission time: 0ˢ·035 ± 0ˢ·002.

Personal equation: Sm.—P.=0ˢ·023±0ˢ·006 as determined at Austin and Galveston in May and June, 1895. P.—M.=+0ˢ·069±0ˢ·009; same from weighted means, +0ˢ·066.

At Austin transit No. 19 was mounted over the new station of 1895 in the capitol grounds and east of the building.

At New Orleans the station is identical with that of 1880 near the center of Lafayette square; transit No. 18 was mounted on the old pier. It is *east* of the old astronomic station of 1858, 0ˢ·866.

$\Delta\lambda$, Austin, (T_{1895}) — New Orleans $(T_{1880\text{-}95}) = 30^{m}\ 40^{s}\cdot230 \pm 0^{s}\cdot010$.

(65) DIFFERENCE OF LONGITUDE BETWEEN CAMBRIDGE, MASS., AND CALAIS, ME.

Date.	Observers at— Cam.	Cal.	From western or Cambridge signals.	From eastern or Calais signals.	W—E	Mean of W. and E. signals.	Personal equation.	Difference of longitude $\Delta\lambda$	p.	v.
1895.			m. s.	m. s.	s.	m. s.	s.	m. s.		s.
Aug. 21	A. T. Mosman.	G. R. Putnam.	15 23·212	15 23·145	0·067	15 23·178	+0·106	15 23·284	2	+0·001
25			·241	·171	·070	·206		·312	7	+ ·029
27			·237	·136	·101	·186		·292	6	+ ·009
30			·177	·111	·066	·144		·250	9	- ·033
Sept. 1			·224	·165	·059	·194		·300	6	+ ·017
2			·203	·136	·067	·170		·276	6	— ·007
				Mean	·072	15 23·180				
Sept. 5	G. R. Putnam.	A. T. Mosman.	15 23·459	15 23·385	·074	15 23·422	—0·106	·316	7	+ ·033
8			·437	·335	·102	·386		·280	5	— ·003
10			·370	·291	·079	·330		·224	5	— ·059
13			·466	·390	·076	·428		·322	5	+ ·039
14			·408	·326	·082	·367		·261	5	—0·022
				Mean	0·083	15 23·387		15 23·283		
				Weighted mean				15 23·283 ± 0ˢ·007		

Transmission time: 0ˢ·038 ± 0ˢ·001.

Personal equation: P.— M.= + 0ˢ·103 ± 0ˢ·005; same from weighted means, —0ˢ·106.

At Cambridge transit No. 19 was mounted on two granite piers, same as in 1872, and 32·918 metres, or 0ˢ·096, west of the center of the dome of the Harvard College Observatory.

At Calais transit No. 18 occupied the old station of 1857 and 1866; it was mounted on a granite block in the grounds and south of the Calais High School, formerly the Calais Academy.

$\Delta\lambda$, Cambridge, Harvard College Observatory (D) — Calais (T) = $15^{m}\ 23^{s}\cdot187 \pm 0^{s}\cdot007$.*

*The former value made up of two links, viz: Cambridge to Bangor in 1851 ($9^{m}\ 23^{s}\cdot080 \pm 0^{s}\cdot043$), and Bangor to Calais in 1857 ($6^{m}\ 00^{s}\cdot316 \pm 0^{s}\cdot015$), was $15^{m}\ 23^{s}\cdot396 \pm 0\cdot046$. The difference from the 1895 value is 0ˢ·21, by which amount the trans-Atlantic determination of 1866 now becomes smaller than the value adopted in 1884.

(66) DIFFERENCE OF LONGITUDE BETWEEN KEY WEST, FLA., AND CHARLESTON, S. C.

Date.	Observers at— K. W.	Observers at— C.	From western or Key West signals.	From eastern or Charleston signals.	W.—E	Mean of W. and E. signals.	Personal equation.	Difference of longitude Δλ	p.	v.
1896.			m. s.	m. s.	s.	m. s.	s.	m. s.		s.
Feb. 11	G. R. Putnam.	C. H. Sinclair.	7 29·511	7 29·223	0·288	7 29·367	+0·157	7 29·524	12	+0·015
12			·474	·223	·251	·348		·505	9	— ·004
18			·495	·189	·306	·342		·499	8	— ·010
19			·519	·172	347	·346		·503	6	— ·006
20			·530	·172	·358	·351		·508	9	— ·001
				Mean	·310	7 29·351				
Feb. 25	C. H. Sinclair.	G. R. Putnam.	7 29·812	7 29·509	·303	7 29·660	—0·157	·503	14	— ·006
26			·825	·511	·314	·668		·511	12	+ ·002
27			·797	·464	·333	·630		·473	5	— ·036
29			·816	·535	·281	·676		·519	15	+ ·010
Mar. 1			·807	·534	·273	·670		·513	19	+0·004
				Mean	0·301	7 29·661		7 29·506		
				Weighted mean				7 29·509 ± 0s·003		

Transmission time: 0s·153 ± 0s·004.

Personal equation: S. — P. = + 0s·155 ± 0s·003; same from weighted means, + 0s·157.

At Key West transit No. 18 was mounted on a brick pier at the new station in Government grounds southwest of the post-office and custom-house.

At Charleston the station is the same as that occupied in 1880 on Citadel square; transit No. 19 was mounted on two granite posts; it is 8″·48 or 0s·565 *east* of the Orphan Asylum cupola.

$\Delta\lambda$, Key West (T_{1896}) — Charleston ($T_{1880\text{-}96}$) = 7m 29s·509 ± 0s·003.

(67) DIFFERENCE OF LONGITUDE BETWEEN ATLANTA, GA., AND KEY WEST, FLA.

Date	Observers at— A.	Observers at— K. W.	From western or Atlanta signals.	From eastern or Key West signals.	W—E	Mean of W. and E. signals.	Personal equation.	Difference of longitude Δλ	p.	v.
1896.			m. s.	m. s.	s.	m. s.	s.	m. s.		s.
Mch. 7	G. R. Putnam.	C. H. Sinclair.	10 19·788	10 19·460	0·328	10 19·624	+0·120	10 19·744	8	—0·021
8			·763	·440	·323	·602		·722	11	— ·043
9			·754	·445	·309	·600		·720	4	— ·045
13			·802	·495	·307	·648		·768	13	+ ·003
14			·842	·522	·320	·682		·802	21	+ ·037
				Mean	·317	10 19·631				
Mch. 20	C. H. Sinclair.	G. R. Putnam.	10 20·018	10 19·686	·332	10 19·852	—0·120	·732	9	— ·033
21			·075	·705	·370	·890		·770	5	+ ·005
25			·102	·737	·365	·919		·799	4	+ ·034
26			·074	·721	·353	·897		·777	8	+ ·012
27			·076	·700	·376	·888		·768	6	+0·003
				Mean	0·359	10 19·889		10 19·760		
				Weighted mean				10 19·765 ± 0s·007		

Transmission time: 0s·169 ± 0s·003.

Personal equation: S. — P. = +0s·129 ± 0s·007; same from weighted means, +0s·120.

At Atlanta transit No. 19 was mounted over the granite piers of the old station of 1874 and 1879 in the grounds of the State capitol; in 1896 the centre of the transit was 38 cm. (equivalent to 0s·001) *east* of the transit of 1879.

At Key West transit No. 18 was mounted on a brick pier at the new station in Government grounds southwest of the post-office and custom-house.

$\Delta\lambda$, Atlanta (T_{1896}) — Key West (T_{1896}) = $10^m\ 19^s.765 \pm 0^s.007$.

(68) DIFFERENCE OF LONGITUDE BETWEEN LITTLE ROCK, ARK., AND ATLANTA, GA.

Date	Observers at— L. R.	Observers at— A.	From western or Little Rock signals.	From eastern or Atlanta signals.	W—E	Mean of W. and E. signals.	Personal equation.	Difference of longitude $\Delta\lambda$	p.	v.
1896.			m. s.	m. s.	s.	m. s.	s.	m. s.		s.
Apr. 2	G. R. Putnam.	C. H. Sinclair.	31 32·317	31 32·202	0.115	31 32·260	+0·119	31 32·379	12	+0·010
4			·310	·199	·111	·254		·373	10	+ ·004
5			·315	·184	·131	·250		·369	8	·000
7			·269	·156	·113	·212		·331	4	— ·038
				Mean	·118	31 32·244				
Apr. 10	C. H. Sinclair.	G. R. Putnam.	31 32·558	31 32·415	·143	·486	—0·119	·367	12	— ·002
11			·596	·462	·134	·529		·410	6	+ ·041
13			·521	·405	·116	·463		·344	5	— ·025
14			·528	·411	·117	·470		·351	6	—0·018
				Mean	0·128	31 32·487		31 32·365		
				Weighted mean				31 32·369 ± 0s·005		

Transmission time: $0^s.061 \pm 0^s.001$.

Personal equation: S.—P. = $+0^s.122 \pm 0^s.005$; same from weighted means, $+0^s.119$.

At Little Rock transit No. 18 was mounted on a pier built over the old station of 1885 in the southwest corner of the post-office and custom-house block. The pier of 1896 is 13 cm. (less than $0^s.001$) *west* of the pier of 1885. The 1882 station could not be recovered.

At Atlanta transit No. 19 was mounted over the granite piers of the old station of 1879 in the grounds of the State capitol; in 1896 the center of the transit was 38 cm. (equivalent to $0^s.001$) *east* of the transit of 1879.

$\Delta\lambda$, Little Rock ($T_{1885\text{-}93\text{-}96}$) — Atlanta ($T_{1896}$) = $31^m\ 32^s.369 \pm 0^s.005$.

(69) DIFFERENCE OF LONGITUDE BETWEEN CHARLESTON, S. C., AND WASHINGTON, D. C.

Date	Observers at— C.	Observers at— W.	From western or Charleston signals.	From eastern or Washington signals.	W—E	Mean of W. and E. signals	Personal equation.	Difference of longitude $\Delta\lambda$	p.	v.
1896.			m. s.	m. s.	s.	m. s.	s.	m. s.		s.
Apr. 21	G. R. Putnam.	C. H. Sinclair.	11 31·629	11 31·544	0·085	11 31·586	+0·174	11 31·760	8	—0·004
22			·604	·537	·067	·570		·744	9	— ·020
26			·632	·558	·074	·595		·769	8	+ ·005
28			·640	·580	·060	·610		·784	8	+ ·020
				Mean	·072	11 31·590				
May 3	C. H. Sinclair.	G. R. Putnam.	11 31·978	11 31·913	·065	11 31·946	—0·174	·772	5	+ ·008
4			32·001	·950	·051	·976		·802	2	+ ·038
6			31·955	·893	·062	·924		·750	12	— ·014
7			31·987	·935	·052	·961		·787	2	+0·023
				Mean	0·058	11 31·952		11 31·771		
				Weighted mean				11 31·764 ± 0s·005		

Transmission time: $0^s.032 \pm 0^s.001$.

Personal equation: S. — P. = $+0^s.181 \pm 0^s.005$; same from weighted means, $+0^s.174$.

At Charleston transit No. 19 was mounted over the granite posts of 1880, in the Citadel grounds, and 8.″48 or $0^s.565$ *east* of the Orphan Asylum cupola. The station of 1850 and 1853 is abandoned.

At Washington transit No. 18 was set over the station established in 1878 in the grounds of the United States Naval Observatory (old site), now (1896) the Museum of Hygiene. This station is 44·714 metres or 0ˢ·124 *west* of the small central dome (centre) of the building.

$\Delta\lambda$, Charleston ($T_{1880\text{-}96}$)—Washington United States Naval Observatory, old site, (D) = 11ᵐ 31ˢ·888 ± 0ˢ·005.

(70) DIFFERENCE OF LONGITUDE BETWEEN WASHINGTON, D. C., AND CAMBRIDGE, MASS.

Date.	Observers at— W.	Observers at— C.	From western or Washington signals.	From eastern or Cambridge signals.	W—E	Mean of W. and E. signals.	Personal equation.	Difference of longitude Δλ	p.	v.
1896.			m. s.	m. s.	s.	m. s.	s.	m. s.		s.
May 14	G. R. Putnam.	C. H. Sinclair.	23 41·082	23 40·997	0·085	23 41·040	+0·143	23 41·183	4	+0·017
16			·049	40·953	·096	·001		·144	5	— ·022
17			·063	41·001	·062	·032		·175	4	+ ·009
27			·125	41·054	·071	41·089		·232	3	+ ·066
29			·022	40·979	·073	40·985		·128	5	— ·038
				Mean	·077	23 41·029				
June 1	C. H. Sinclair.	G. R. Putnam.	23 41·464	23 41·376	·088	23 41·420	—0·143	·277	4	+ ·111
2			·470	·373	·097	·422		·279	5	+ ·113
5			·294	·222	·072	·258		·115	7	— ·051
10			·321	·255	·066	·288		·145	6	— ·021
12			·316	·251	·065	·283		·140	4	— ·026
17			·251	·160	·091	·206		·063	4	—0·103
				Mean	0·080	23 41·313		23 41·171		
				Weighted mean				23 41·166 ± 0ˢ·014		

Transmission time: 0ˢ·039 ± 0ˢ·001.

Personal equation: S.—P.= +0ˢ·142 ± 0ˢ·013; same from weighted means, +0ˢ·143.

At Washington transit No. 18 was mounted over the old station of 1878 in the grounds of the United States Naval Observatory, old site, now (1896) the Museum of Hygiene. This station is 44·714 metres or 0ˢ·124 *west* of the centre of the small central dome of the building.

At Cambridge transit No. 19 was mounted over the station of 1872. It is 32·918 metres or 0ˢ·096 *west* of the centre of the dome of the Harvard College Observatory.

$\Delta\lambda$, Washington, United States Naval Observatory, old site, (D)—Cambridge, Harvard College Observatory, (D) = 23ᵐ 41ˢ·138 ± 0ˢ·014.

(71) DIFFERENCE OF LONGITUDE BETWEEN ALBANY, N. Y., AND CAMBRIDGE, MASS.

Date.	Observers at— A.	Observers at— C.	From western or Albany signals.	From eastern or Cambridge signals.	W—E	Mean of W. and E. signals.	Personal equation.	Difference of longitude Δλ	p.	v.
1896.			m. s.	m. s.	s.	m. s.	s.	m. s.		s.
Aug. 25	C. H. Sinclair.	R. L. Faris.	10 29·116	10 29·081	0·035	10 29·098	—0·279	10 28·819	8	+0·044
26			·109	·051	·058	·080		·801	5	+ ·026
28			·073	29·029	·044	·051		·772	3	— ·003
29			·032	28·975	·057	·004		·725	5	— ·050
30			·044	28·990	·054	·017		·738	6	— ·037
				Mean	·050	10 29·050				
Aug. 31	R. L. Faris.	C. H. Sinclair.	10 28·466	10 28·429	·037	10 28·448	+0·279	·727	4	— ·048
Sep. 1			·508	·473	·035	·490		·769	10	— ·006
4			·563	·521	·042	·542		·821	7	+ ·046
7			·517	·479	·038	·498		·777	3	+ ·002
8			·495	·462	·033	·478		·757	4	—0·018
				Mean	0·037	10 28·491		10 28·771		
				Weighted mean				10 28·775 ± 0ˢ·008		

Transmission time: $0^s\cdot022 \pm 0^s\cdot001$.

Personal equation: S. — F. $= +0^s\cdot280 \pm 0^s\cdot009$; same from weighted means, $+0^s\cdot279$.

At Albany the old station in the grounds of the Dudley Observatory, old site, established in 1858 and used in 1891, was reoccupied in 1896; transit No. 18 was mounted over the station, which is 18·63 metres or $0^s\cdot055$ *east* of the centre of the dome of the observatory.

At Cambridge the old station of 1872 and 1895 in the grounds of Harvard College Observatory was reoccupied; transit No. 18 was placed over the station, which is 32·918 metres or $0^s\cdot096$ *west* of the centre of the dome of the observatory.

$\Delta\lambda$, Albany Dudley Observatory, old site, (D) — Cambridge Harvard College Observatory (D) $= 10^m\ 28^s\cdot926 \pm 0^s\cdot008$.

(72) DIFFERENCE OF LONGITUDE BETWEEN ALBANY, N. Y., AND MONTREAL, CANADA.

Date.	Observers at— A.	Observers at— M.	From western or Albany signals.	From eastern or Montreal signals.	W — E	Mean of W. and E. signals.	Personal equation.	Difference of longitude $\Delta\lambda$	p.	v.
1896.			*m.* *s.*	*m.* *s.*	*s.*	*m.* *s.*	*s.*	*m.* *s.*		*s.*
Sept. 16	R. L. Faris.	C. H. Sinclair.	0 41·050	0 41·006	0·044	0 41·028	+0·266	0 41·294	5	—0·003
20			·086	41·047	·039	·066		·332	6	+ ·035
24			·036	40·998	·038	·017		·283	3	— ·014
28			·022	40·987	·035	·005		·271	6	— ·026
Oct. 9			·052	41·016	·036	·034		·300	5	+ ·003
				Mean	·038	0 41·030				
Oct. 10	C. H. Sinclair.	R. L. Faris.	0 41·525	0 41·491	·034	0 41·508	—0·266	·242	7	— ·055
15			·569	·538	·031	·553		·287	4	— ·010
19			·617	·580	·037	·598		·332	11	+ ·035
21			·639	·599	·040	·619		·353	4	+ ·056
26			·578	·526	·052	·552		·286	15	—0·011
				Mean	0·039	0 41·566		0 41·298		
				Weighted mean				0 41·297 ± 0s·007		

Transmission time, $0^s\cdot019 \pm 0^s\cdot001$.

Personal equation, S. — F. $= +0^s\cdot268 \pm 0^s\cdot009$; same from weighted means, $+0^s\cdot266$.

At Albany the old station in the grounds of the Dudley Observatory, old site, established in 1858 and occupied in 1891, was reoccupied in 1896; transit No. 18 was mounted over it. It is 18·63 metres or $0^s\cdot055$ *east* of the centre of the dome of the observatory.

At Montreal transit No. 19 was mounted in the astronomic observatory of McGill College in the place of the observatory transit, which was removed from its (eastern) pier.

$\Delta\lambda$, Albany Dudley Observatory, old site, (D) — McGill College Observatory or Transit House ($T_{1892\text{-}96}$) $= 0^m\ 41^s\cdot352 \pm 0^s\cdot007$.

It will be both instructive and useful to exhibit and evaluate the variation in the personal equation from a series of measures between practiced observers and extending over a number of years. In this field of inquiry the survey offers several excellent examples taken from the present collection of results, and supplemented by intermediate results pertaining to links not included in the general longitude net. No account is here taken of the different declinations of the stars.

Personal equation (not reduced to equator).

E. Smith—C. H. Sinclair.			C. H. Sinclair—R. A. Marr.			C. H. Sinclair—G. R. Putnam.		
	s.	s.		s.	s.		s.	s.
1881 Aug. and Sept.	+0·123	±0·008	1886 Sept. and Oct.	+0·288	±0·008	1891 May and June	+0·184	±0·011
1881 Nov. and Dec.	+ ·085	06	1888 Sept.	+ ·210	09	1891 June and July	+ ·140	08
1885 Apr. and May	+ ·047	08	1888 Oct. and Nov.	+ ·144	11	1891 July	+ ·172	06
1885 May and June	+ ·131	03	1888–9 Dec. and Jan.	+ ·214	10	1891 Aug.	+ ·161	10
1885 July and Aug.	+ ·110	10	1889 Jan.	+ ·233	05	1891 Aug. and Sept.	+ ·176	11
1886 May and June	+ ·062	08	1889 Jan. and Feb.	+ ·225	07	1892 Feb. and Mar.	+ ·160	06
1886 June and July	— ·010	06	1889 Feb. and Mar.	+ ·267	07	1892 Mar.	+ ·192	04
1886 July and Aug.	+ ·023	12	1889 Mar. and Apr.	+ ·278	12	1892 Mar. and Apr.	+ ·140	02
1886 Aug. and Sept.	— ·056	04	1889 Apr. and May	+ ·217	12	1892 Apr.	+ ·150	05
1887 May and June	— ·038	10	1889 May and June	+ ·282	18	1892 Apr. and May	+ ·126	04
1887 June July and Aug.	— ·109	13	1889 June and July	+ ·246	07	1892 June and July	+ ·109	10
			1889 July	+ ·275	08	1893 Feb. and Mar.	+ ·082	10
1887 Sept.	— ·111	13	1889 July	+ ·265	05	1896 Feb. and Mar.	+ ·155	03
1887 Sept. and Oct.	— ·160	09	1889 July and Aug.	+ ·228	15	1896 Mar.	+ ·129	07
1895 Feb. and Mar.	— ·093	11	1889 Aug.	+ ·284	08	1896 Apr.	+ ·122	05
1895 Mar.	— ·075	11	1889 Aug. and Sept.	+ ·226	06	1896 Apr. and May	+ ·181	05
1895 Apr.	—0·086	±0·005	1889 Sept.	+ ·258	07	1896 May and June	+ ·142	13
			1890 May and June	+ ·166	14	1896 June and July	+0·124	±0·008
Mean, Sm. —Sin.	—0·010		1890 July	+ ·238	10			
Prob. error* of a single value	±0ˢ·063		1890 July and Aug.	+ ·237	14	Mean S. — P. =	+0·147	
			1890 Aug.	+0·278	±0·006	Prob. error* of a single value		±0ˢ·020
			Mean S. — M. =	+0·241				
			Prob. error* of a single value		±0ˢ·026			

* This value may be taken as a measure of variability of the personal equation.

EFFECT OF THE VARIATION IN LATITUDE UPON THE RESULTING DIFFERENCES OF LONGITUDE.

The correction to an observed difference of longitude on account of the variation in latitude and the consequent periodic shifting of the direction of the meridian is in general very small. Only the difference of the effect at the two terminal stations will enter, besides the longitude links are short and their latitude difference generally small and the latitudes themselves comparatively low, all of which tends to keep the correction small. It is fair to assume that it is within the limits of the probable errors of observation; even in an extreme case as in the cable determination of 1892, Greenwich to Montreal (say about 1892·78)* when the two poles were widely separated, the correction was not far from —0ˢ·01. Considering that the coordinates of the moving pole are themselves still subject to considerable uncertainty and improvement and that the whole effect on the longitude system is to some extent compensatory, for both the annual and the fourteen months periods, it was thought that the application of so small and uncertain a correction was not called for at the present time.

ADJUSTMENT OF THE LONGITUDE NET CONNECTING GREENWICH, ENGLAND, AND SAN FRANCISCO, CAL.

The preceding abstracts of results show that 45 longitude stations are bound together by 72 determinations of difference of longitude; there are, therefore, 28 more measures than absolutely required, hence they involve that number of conditions which must be satisfied in order to form a consistent whole. Although the method of treatment presents no novelty, it was thought advantageous to recapitulate briefly the leading formulæ in order that the notation and numerical work given further on may not require additional explanation. With regard to weights to be given to the individual differences of longitude, the fact that in every measure there exists a certain limit of accuracy, beyond which the probable error of the operation can not be depressed, no matter how often we may repeat the measure, has been kept in view. Any resulting numerical value of the probable error less than this adopted *minimum limit* may be regarded as more or less fictitious; of such values, that is less than supposed ±0ˢ·008, there are in our table 17 cases, of the whole number 72; these have each received the maximum weight, notwithstanding their range from

* Actual date not known, at the assumed date the Greenwich correction becomes zero.

$\pm 0^s{\cdot}007$ to $\pm 0^s{\cdot}003$. As an example of the inclusion of obscure errors not apparent in our computed probable error, we may take the following illustration:

$\Delta\lambda$ Washington Naval Observatory, old site and " " " , new site	+3·670	±0·012
$\Delta\lambda$ Washington Naval Observatory, old site and " Coast and Geodetic Survey Office	+10·462	±0·008
$\Delta\lambda$ Washington Coast and Geodetic Survey Office and " Naval Observatory, new site.	−14·465	±0·006

Closing error $=0^s{\cdot}067 \pm 0^s{\cdot}016$; here the closing error is four times as great as the probable error would indicate. The relative values of the reciprocal of weights as shown in the synopsis are those of $1/p = 10^4\,\varepsilon^2$, where the multiplier 10^4 is introduced for convenience of computation.

Telegraphic longitude system of the United States and its connection with Europe.

SYNOPSIS OF OBSERVED DIFFERENCES OF LONGITUDE.

No.	Year.	Month.	Western station.	Reference.	Eastern station.	Reference.	Observed difference of longitude.	Prob. error.	Reciprocal of weight.
							h. m. s.	s.	
1	1866	Oct., Nov.	Heart's Content, Newfoundland	Tr.	Foilhommerum, Ireland	Tr.	2 51 56·364	±0·029	8
2	1866	Nov.	Foilhommerum, Ireland	Tr.	Greenwich, England	Tr. Cir.	41 33·34	·060	36
3	1866	Dec.	Calais, Me.	Tr.	Heart's Content, Newfoundland	Tr.	55 38·00	·060	36
4	1869	Feb.	Salt Lake City, Utah.	Tr.	Omaha, Nebr.	Tr.	1 03 49·113	·016	3
5	1869–70	Dec., Jan., Feb.	Cambridge, Mass.	Dome	Duxbury, Mass.	Tr.	1 50·191	·022	5
6	1870	Jan., Feb.	Duxbury, Mass.	Tr.	Brest, France	Tow. of S. L.	4 24 43·276	·047	22
7	1872	July	Brest, France	Tow. of S. L.	Greenwich, England	Tr. Cir.	17 57·598	·022	5
8	1872	July	Brest, France	Tow. of S. L.	Paris, France	M. of F.	27 18·533	·038	14
9	1872	July	St. Pierre Island, Miquelon	Tr.	Brest, France	Tow. of S. L.	3 26 44·810	·027	7
10	1872	July, Aug.	Cambridge, Mass.	Dome	St. Pierre Island, Miquelon	Tr.	59 48·608	·021	4
11	1872	Aug., Sept.	Greenwich, England	Tr. Cir.	Paris, France	M. of F.	9 21·000	·038	14
12	1879	Jan., Feb., Mar.	Atlanta, Ga.	Tr.	Washington, D. C.	Dome / Old site	29 21·192	·016	3
13	1879	Nov., Dec.	Nashville, Tenn.	Tr.	Louisville, Ky.	Tr.	4 04·451	·013	2
14	1879–80	Dec., Jan.	Nashville, Tenn.	Tr.	Atlanta, Ga.	Tr.	9 34·760	·012	1
15	1880	Feb., Mar.	New Orleans, La.	Tr. 1895	Nashville, Tenn.	Tr.	13 08·677	·009	1
16	1880	Mar., Apr.	New Orleans, La.	Tr. 1895	Atlanta, Ga.	Tr.	22 43·371	·013	2
17	1880	May	Atlanta, Ga.	Tr.	Charleston, S. C.	Tr.	17 49·222	·010	1
18	1881	May	Washington, D. C.	Dome / Old site	Cape May, N. J.	Tr.	8 29.074	·009	1
19	1881	May, June	Detroit, Mich.	Tr. 1891	Cambridge, Mass.	Dome	47 40·806	·013	2
20	1881	July, Aug.	Cincinnati, Ohio	Dome	Washington, D. C.	Dome / Old site	29 29.259	·011	1
21	1881	Aug., Sept.	Nashville, Tenn.	Tr.	Cincinnati, Ohio	Dome	9 26·682	·006	1
22	1881	Sept., Oct.	St. Louis, Mo.	Tr. 1882	Cincinnati, Ohio	Dome	23 07·894	·015	2
23	1881	Oct., Nov.	St. Louis, Mo.	Tr. 1882	Nashville, Tenn.	Tr.	13 41·207	·013	2
24	1882	Sept., Oct.	Kansas City, Mo.	Tr.	St. Louis, Mo.	Tr. 1882	17 32·183	·011	1
25	1882	Oct., Nov.	Omaha, Nebr.	Tr.	St. Louis, Mo.	Tr. 1882	22 56·831	·010	1
26	1882–83	Nov., Dec., Jan.	Omaha, Nebr.	Tr.	Kansas City, Mo.	Tr.	5 24·626	·016	3
27	1883	June	Montreal, Canada	McG. Col. Tr.	Cambridge, Mass.	Dome	9 47·549	·019	4
28	1883	Sept., Oct., Nov.	Chicago, Ill.	Tr. 1891	Louisville, Ky.	Tr.	7 25·808	·010	1
29	1885	Apr., May	Galveston, Tex.	Tr. 1895	Little Rock, Ark.	Tr.	10 04·192	·011	1
30	1885	May, June	Kansas City, Mo.	Tr.	Little Rock, Ark.	Tr.	9 15·644	·003	1
31	1885	July, Aug.	Colorado Springs, Colo.	Tr	Kansas City, Mo.	Tr.	40 55·327	·011	1
32	1886	May, June	Santa Fé, N. Mex.	Tr.	Colorado Spgs., Colo.	Tr.	4 30·107	·012	1
33	1886	Aug., Sept.	Salt Lake City, Utah.	Tr.	Colorado Spgs., Colo.	Tr.	28 18·471	·008	1
34	1887	May, June	San Francisco, Cal.	Laf. Prk.	Salt Lake City, Utah	Tr.	42 07·696	·011	1
35	1887	June, July, Aug.	Portland, Oreg.	Tr.	San Francisco, Cal.	Laf. Prk.	59·983	·015	2
36	1887	Sept.	Portland, Oreg.	Tr.	Walla Walla, Wash.	Tr.	17 19·503	·011	1
37	1887	Sept., Oct.	Walla Walla, Wash.	Tr.	Salt Lake City, Utah	Tr.	25 48·186	·009	1
38	1888	June, July	Portland, Oreg.	Tr.	Seattle, Wash.	Tr.	1 22·486	·026	7
39	1888	Aug.	Seattle, Wash.	Tr.	Walla Walla, Wash.	Tr.	15 57·028	·009	1
40	1888	Aug., Sept.	Walla Walla, Wash.	Tr.	Helena, Mont.	Tr.	25 14·510	·006	1
41	1888–89	Dec., Jan.	San Francisco, Cal.	Laf. Prk.	Sacramento, Cal.	Tr.	3 44·487	·008	1
42	1889	Mar., Apr.	Sacramento, Cal.	Tr.	Los Angeles, Cal.	Tr.	12 56·840	·010	1
43	1889	Apr., May	San Francisco, Cal.	Laf. Prk.	Los Angeles, Cal.	Tr.	16 41·282	·009	1
44	1889	May, June	Los Angeles, Cal.	Tr.	Needles, Cal.	Tr.	14 36·728	·016	3
45	1890	July	Helena, Mont.	Tr.	Salt Lake City, Utah	Tr.	33·577	·013	2
46	1890	July, Aug.	Helena, Mont.	Tr.	Bismarck, N. Dak.	Tr.	45 00·839	·012	1
47	1890	Aug.	Bismarck, N. Dak.	Tr.	Minneapolis, Minn.	Tr.	30 11·080	·006	1
48	1891	May, June	Cape May, N. J.	Tr.	Albany, N. Y.	Dome / Old site	4 43·020	·010	1
49	1891	June, July	Detroit, Mich.	Tr. 1891	Albany, N. Y.	Dome / Old site	37 11·845	·005	1
50	1891	July	Chicago, Ill.	Tr. 1891	Detroit, Mich.	Tr. 1891	18 17·634	·006	1
51	1891	Aug.	Minneapolis, Minn.	Tr.	Chicago, Ill.	Tr. 1891	22 27·414	·010	1
52	1891	Aug., Sept.	Omaha, Nebr.	Tr.	Minneapolis, Minn.	Tr.	10 49·269	·010	1
53	1892	Feb., Mar.	Los Angeles, Cal.	Tr.	San Diego, Cal.	Tr.	4 22·786	·010	1
54	1892	Mar.	San Diego, Cal.	Tr.	Yuma, Ariz.	Tr.	10 09·114	·005	1
55	1892	Mar., Apr.	Los Angeles, Cal.	Tr.	Yuma, Ariz.	Tr.	14 31·974	·006	1
56	1892	Apr.	Yuma, Ariz.	Tr.	Nogales, Ariz.	Tr.	14 43·690	·007	1
57	1892	Apr., May	Nogales, Ariz.	Tr.	El Paso, Tex.	Tr.	17 48·520	·009	1

Telegraph longitude system of the United States and its connection with Europe—Continued.

SYNOPSIS OF OBSERVED DIFFERENCES OF LONGITUDE—Continued.

No.	Year.	Month.	Western station.	Reference.	Eastern station.	Reference.	Observed difference of longitude.	Prob. error.	Reciprocal of weight.
							h. *m.* *s.*	*s.*	
58	1892	.....	Montreal, Canada	McG. Col. Tr.	Greenwich, England	Tr. Cir.	4 54 18·67	....*	9
59	1893	Feb., Mar.	El Paso, Tex.	Tr.	Little Rock, Ark.	Tr.	56 51·681	0·009	1
60	1895	Feb., Mar.	Needles, Cal.	Tr.	Santa Fe, N. Mex.	Tr.	34 38·032	·013	2
61	1895	Mar.	El Paso, Tex.	Tr.	Santa Fe, N. Mex.	Tr.	2 10·593	·009	1
62	1895	Apr.	El Paso, Tex.	Tr.	Austin, Tex.	Tr.	35 00·322	·004	1
63	1895	May, June	Austin, Tex.	Tr.	Galveston, Tex.	Tr. 1895	11 47·087	·004	1
64	1895	June, July	Austin, Tex.	Tr.	New Orleans, La.	Tr. 1895	30 40·230	·010	1
65	1895	Aug., Sept.	Cambridge, Mass.	Dome	Calais, Me.	Tr.	15 23·187	·007	1
66	1896	Feb., Mar.	Key West, Fla.	Tr.	Charleston, S. C.	Tr.	7 29·509	·003	1
67	1896	Mar.	Atlanta, Ga.	Tr.	Key West, Fla.	Tr.	10 19·765	·007	1
68	1896	Apr.	Little Rock, Ark.	Tr.	Atlanta, Ga.	Tr.	31 32·369	·005	1
69	1896	Apr., May	Charleston, S. C.	Tr.	Washington, D. C.	{Dome / Old site}	11 31·888	·005	1
70	1896	May, June	Washington, D. C.	Dome. Old site.	Cambridge, Mass.	Dome	23 41·138	·014	2
71	1896	Aug., Sept.	Albany, N. Y.	Dome. Old site.	Cambridge, Mass.	Dome	10 28·926	·008	1
72	1896	Sept., Oct.	Albany, N. Y.	Dome. Old site.	Montreal, Canada	McG. Col. Tr.	41·352	0·007	1

*Estimated : 0·03.

The method of adjustment of the measures to satisfy the geometrical conditions of the net is that usually followed in the case of conditional observations, and in the present application is quite simple.* Suppose we have given as the direct result of observation the m quantities $l_1\ l_2\ l_3\ \ldots$ which are connected by n conditions and let $x_1\ x_2\ x_3\ \ldots$ be their most probable values; also let $v_1\ v_2\ v_3\ \ldots$ be the corrections to the observed values, so that in general we have $x_1 = l_1 + v_1$; then, remembering that necessarily m>n in order that any adjustment may be possible, the conditions involved may be expressed by n equations of linear form, thus

$$\begin{aligned} o &= a_0 + a_1 x_1 + a_2 x_2 + a_3 x_3 + \ldots \\ o &= b_0 + b_1 x_1 + b_2 x_2 + b_3 x_3 + \ldots \\ o &= c_0 + c_1 x_1 + c_2 x_2 + c_3 x_3 + \ldots \\ &\ldots\ldots\ldots\ldots \end{aligned}$$

Introducing the observed quantities, these equations will not be satisfied, but there will be left the discrepancies $w_1\ w_2\ w_3\ \ldots$ viz:

$$\begin{aligned} w_1 &= a_0 + a_1 l_1 + a_2 l_2 + a_3 l_3 + \ldots \\ w_2 &= b_0 + b_1 l_1 + b_2 l_2 + b_3 l_3 + \ldots \\ w_3 &= c_0 + c_1 l_1 + c_2 l_2 + c_3 l_3 + \ldots \\ &\ldots\ldots\ldots\ldots \end{aligned}$$

where the sign of w_i is to be taken in the sense of observed value minus true value. We have then the n condition equations

$$\begin{aligned} o &= w_1 + a_1 v_1 + a_2 v_2 + a_3 v_3 + \ldots \\ o &= w_2 + b_1 v_1 + b_2 v_2 + b_3 v_3 + \ldots \\ o &= w_3 + c_1 v_1 + c_2 v_2 + c_3 v_3 + \ldots \\ &\ldots\ldots\ldots\ldots \end{aligned}$$

Let $p_1\ p_2\ p_3\ \ldots$ be the weights of the quantities $l_1\ l_2\ l_3\ \ldots$, then the quantity [p. vv] must be made a minimum. This leads to the equations of correlatives, which introduce the (as yet) unknown multipliers $C_1\ C_2\ C_3\ \ldots$ These correlate equations are

$$\begin{aligned} p_1 v_1 &= a_1 C_1 + b_1 C_2 + c_1 C_3 + \ldots \\ p_2 v_2 &= a_2 C_1 + b_2 C_2 + c_2 C_3 + \ldots \\ p_3 v_3 &= a_3 C_1 + b_3 C_2 + c_3 C_3 + \ldots \\ &\ldots\ldots\ldots\ldots \end{aligned}$$

*Cf. T. W. Wright, Treatise on the Adjustment of Observations, New York, 1884, Chapter V, p. 213 and foll.; also Dr. W. Jordan's Vermessungskunde, Vol. I (1888), p. 104 and foll.

The normal equations become

$$\left[\frac{aa}{p}\right] C_1 + \left[\frac{ab}{p}\right] C_2 + \left[\frac{ac}{p}\right] C_3 + \ldots + w_1 = o$$
$$\left[\frac{ab}{p}\right] C_1 + \left[\frac{bb}{p}\right] C_2 + \left[\frac{bc}{p}\right] C_3 + \ldots + w_2 = o$$
$$\left[\frac{ac}{p}\right] C_1 + \left[\frac{bc}{p}\right] C_2 + \left[\frac{cc}{p}\right] C_3 + \ldots + w_3 = o$$
$$\ldots\ldots\ldots\ldots\ldots\ldots\ldots$$

which may be written in the form

$$[u.aa]\, C_1 + [u.ab]\, C_2 + [u.ac]\, C_3 + \ldots + w_1 = o$$
$$+ [u.bb]\, C_2 + [u.bc]\, C_3 + \ldots + w_2 = o$$
$$+ [u.cc]\, C_3 + \ldots + w_3 = o$$
$$+ \ldots\ldots\ldots$$

where $u = \frac{1}{p}$. Solving these equations, the values of C_1 become known and consequently also the values of v_1 and of x_1.

*Observation equations.**

s.

0 = −0·065 −(7) +(8) −(11)
0 = +0·174 −(1) −(2) −(3) +(5) +(6) +(7) −(65)
0 = +0·049 +(5) +(6) −(9) −(10)
0 = −0·105 +(7) +(9) +(10) +(27) −(58)
0 = +0·025 −(27) +(71) −(72)
0 = +0·035 +(19) −(49) −(71)
0 = −0·004 −(13) −(19) +(20) +(21) +(28) −(50) +(70)
0 = +0·118 −(18) −(48) +(70) −(71)
0 = +0·011 +(12) +(14) −(20) −(21)
0 = −0·082 −(12) +(17) +(69)
0 = +0·052 −(17) +(66) +(67)
0 = −0·005 +(21) −(22) +(23)
0 = −0·002 +(13) +(23) +(25) −(28) −(51) −(52)
0 = −0·022 +(24) −(25) +(26)
0 = −0·137 −(14) −(23) −(24) +(30) +(68)
0 = −0·066 −(14) −(15) +(16)
0 = −0·047 +(16) −(29) −(63) +(64) −(68)
0 = −0·080 +(29) −(59) +(62) +(63)
0 = +0·010 −(30) −(31) −(32) +(59) −(61)
0 = +0·059 −(4) −(26) +(31) +(33)
0 = +0·040 +(4) +(45) −(46) −(47) +(52)
0 = +0·017 −(44) +(55) +(56) +(57) −(60) +(61)
0 = −0·074 +(53) +(54) −(55)
0 = −0·018 +(32) −(33) −(34) +(43) +(44) +(60)
0 = −0·045 −(41) −(42) +(43)
0 = +0·099 +(37) −(40) −(45)
0 = −0·010 +(34) +(35) −(36) −(37)
0 = −0·011 +(36) −(38) −(39)

* Their number equals $l - s + 1$ or $72 - 45 + 1 = 28$.

Correlate equations.

Correlates.	Symbols of coefficients.	Discrepancies w	Corr's v $u=\frac{1}{p}$	(7) 5	(8) 14	(11) 14	(1) 8	(2) 36	(3) 36	(5) 5	(6) 22	(65) 1	(9) 7	(10) 4	(27) 4	(58) 9	(71) 1	(72) 1	(19) 2	(49) 1	(13) 2	(20) 1	(21) 1	(28) 1	(50) 1	(70) 2	(18) 1
C_1	a	s																									
C_2	b	−.065		−1																							
C_3	c	+.174		+1	+1	−1	−1	−1	−1	+1	+1	−1	−1	−1	+1	−1											
C_4	d	+.049								+1	+1		+1	+1	−1												
C_5	e	−.105		+1														−1									
C_6	f	+.025														−1	+1		+1	−1							
C_7	g	+.035															−1		−1								
C_8	h	−.004																									
C_9	i	+.118															−1										
C_{10}	j	+.011																									
C_{11}	k	−.082																									
C_{12}	l	+.052																									
C_{13}	m	−.005																									
C_{14}	n	−.002																			+1			−1			
C_{15}	o	−.022																									
C_{16}	p	−.137																									
C_{17}	q	−.066																									
C_{18}	r	−.047																									
C_{19}	s	−.080																									
C_{20}	t	+.010																									
C_{21}	u	+.059																									
C_{22}	v	+.040																				+1	+1	+1	−1	+1	−1
C_{23}	w	+.017																				−1	−1			+1	
C_{24}	x	−.074																						+1			
C_{25}	y	−.018																							−1		
C_{26}	z	−.045																									
C_{27}	α	+.099													−1	+1						+1				+1	
C_{28}	β	−.010													−1	+1										+1	
(Washington) f.		−.011																									
(San Francisco) f.																											

Correlate equations—Continued.

Correlates.	Synopsis of coefficients.	Discrep-ancies w	Corr's v $u=\frac{1}{p}$	(48) 1	(12) 3	(14) 1	(17) 1	(69) 1	(66) 1	(67) 1	(22) 2	(23) 2	(25) 1	(51) 1	(52) 1	(24) 1	(26) 3	(30) 1	(68) 1	(15) 1	(16) 2	(29) 1	(63) 1	(64) 1	(59) 1	(62) 1	(31) 1
C_9	h	.s. +.118		−1																							
C_9	i	+.011			+1	+1		+1																			
C_{10}	j	−.082			−1		+1																				
C_{11}	k	+.052					−1		+1	+1																	
C_{12}	l	−.005									−1	+1	+1	−1	−1	+1	+1										
C_{13}	m	−.002										+1	−1			−1											
C_{14}	n	−.022				−1						−1						−1									
C_{15}	o	−.137				−1													+1	−1	+1						
C_{16}	p	−.066																	−1	+1	+1						
C_{17}	q	−.047																		−1	−1	+1	+1	+1	−1	+1	−1
C_{18}	r	−.080																			+1	−1	+1		−1		
C_{19}	s	+.010															−1	−1									
C_{20}	t	+.059																									
C_{21}	u	+.040													+1												
C_{22}	v	+.017																									
C_{23}	w	−.074																									
C_{24}	x	−.018																									
C_{25}	y	−.045																									
C_{26}	z	+.099																									
C_{27}	α	−.010																									
C_{28}	β	−.011									+1		+1														
	(Washington) f.																										
	(San Francisco) f.																										

Correlates.	Synopsis of coefficients.	Discrep-ancies w	Corr's v $u=\frac{1}{p}$	(32) 1	(61) 1	(4) 3	(33) 1	(45) 2	(46) 1	(47) 1	(44) 3	(55) 1	(56) 1	(57) 1	(60) 2	(53) 1	(54) 1	(34) 1	(42) 1	(41) 1	(43) 1	(37) 1	(40) 1	(35) 2	(36) 1	(38) 7	(39) 1
C_9	s	.s. +.010		−1	−1																						
C_{10}	t	+.059				−1	+1																				
C_{11}	u	+.040				+1		+1	−1	−1	−1	+1	+1	+1	−1	+1											
C_{12}	v	+.017			+1							−1			+1												
C_{13}	w	−.074					−1				+1	−1	+1				+1	−1									
C_{14}	x	−.018		+1																	+1						
C_{15}	y	−.045																	−1	−1	+1		−1				
C_{16}	z	+.099						−1														+1		+1	−1	−1	−1
C_{17}	α	−.010																+1				−1		+1	+1		
C_{18}	β	−.011				+1												+1								−1	−1
	(Washington) f.																										
	(San Francisco) f.																										

Normal equations.

	C_1	C_2	C_3	C_4	C_5	C_6	C_7	C_8	C_9	C_{10}	C_{11}	C_{12}	C_{13}	C_{14}	C_{15}	C_{16}	C_{17}	C_{18}	C_{19}	C_{20}	C_{21}	C_{22}	C_{23}	C_{24}	C_{25}	C_{26}	C_{27}	C_{28}
$o = -0.065$	+33	− 5		− 5	•																						
$o = +0.174$		+113	+27	+ 5																							
$o = +0.049$			+38	−11																							
$o = -0.105$				+29	−4																						
$o = +0.025$					+6	−1		−1																			
$o = +0.035$						+4	− 2	+1																			
$o = -0.004$							+10	+2	−2			+1	−3														
$o = +0.118$								+5																			
$o = +0.011$									+6	−3		−1			−1	−1											
$o = -0.082$										+5	−1																
$o = +0.052$											+3																
$o = -0.005$												+5	+2		−2												
$o = -0.002$													+8	−1	−2						−1						
$o = -0.022$														+5	−1					−3							
$o = -0.137$															+6	+1	−1		−1								
$o = -0.066$																+4	+2										
$o = -0.047$																	+6	−2									
$o = -0.080$																		+4	−1								
$o = +0.010$																			+5	−1		−1		−1			
$o = +0.059$																				+8	−3			−1			
$o = +0.040$																					+8				−2		
$o = +0.017$																						+9	−1	−5			
$o = -0.074$																							+3				
$o = -0.018$																								+9	+1	−1	
$o = -0.045$																									+3		
$o = +0.099$																										+4	−1
$o = -0.010$																											+5
$o = -0.011$																											

																											−1
																											+9

The solution of these equations gives the following values of C_i, from which the individual corrections v_i are deduced:

Resulting values of C_i.

1	+0·00229	11	−0·00585	21	−0·01225
2	−0·00191	12	+0·01794	22	+0·00571
3	+0·00123	13	+0·01546	23	+0·02650
4	+0·00401	14	+0·01558	24	+0·00489
5	−0·00589	15	+0·05042	25	+0·01340
6	+0·00684	16	−0·00309	26	−0·03168
7	+0·01768	17	+0·03043	27	−0·00317
8	−0·03319	18	+0·03958	28	+0·00087
9	+0·03221	19	+0·01744		
10	+0·03455	20	−0·00333		

Resulting differences of longitude.

	Western station.	Eastern station.	Observed difference of longitude.			Correction.	Adjusted difference of longitude.		
			h.	*m.*	*s.*	*s.*	*h.*	*m.*	*s.*
1	Heart's Content	Foilhommerum	2	51	56·364	+·015	2	51	56·379
2	Foilhommerum	Greenwich		41	33·34	+·069		41	33·409
3	Calais	Heart's Content		55	38·00	+·069		55	38·069
4	Salt Lake City	Omaha	1	03	49·113	−·027	1	03	49·086
5	Cambridge	Duxbury		1	50·191	−·003		1	50·188
6	Duxbury	Brest	4	24	43·276	−·015	4	24	43·261
7	Brest	Greenwich		17	57·598	−·001		17	57·597
8	Brest	Paris		27	18·533	+·032		27	18·565
9	St. Pierre Island	Brest	3	26	44·810	+·020	3	26	44·830
10	Cambridge	St. Pierre Island		59	48·608	+·011		59	48·619
11	Greenwich	Paris		9	21·000	−·032		9	20·968
12	Atlanta	Washington		29	21·192	−·007		29	21·185
13	Nashville	Louisville		4	04·451	−·004		4	04·447
14	Nashville	Atlanta		9	34·760	−·015		9	34·745
15	New Orleans	Nashville		13	08·677	+·003		13	08·680

Resulting differences of longitude—Continued.

	Western station.	Eastern station.	Observed difference of longitude.	Correction.	Adjusted difference of longitude.
			h. m. s.	s.	h. m. s.
16	New Orleans	Atlanta	22 43·371	+·054	22 43·425
17	Atlanta	Charleston	17 49·222	+·040	17 49·262
18	Washington	Cape May	8 29·074	+·034	8 29·108
19	Detroit	Cambridge	47 40·806	−·022	47 40·784
20	Cincinnati	Washington	29 29·259	−·014	29 29·245
21	Nashville	Cincinnati	9 26·682	+·003	9 26·685
22	St. Louis	Cincinnati	23 07·894	−·036	23 07·858
23	St. Louis	Nashville	13 41·207	−·034	13 41·173
24	Kansas City	St. Louis	17 32·183	−·035	17 32·148
25	Omaha	St. Louis	22 56·831	·000	22 56·831
26	Omaha	Kansas City	5 24·626	+·057	5 24·683
27	Montreal	Cambridge	9 47·549	+·039	9 47·588
28	Chicago	Louisville	7 25·808	+·002	7 25·810
29	Galveston	Little Rock	10 04·192	+·009	10 04·201
30	Kansas City	Little Rock	9 15·644	+·033	9 15·677
31	Colorado Springs	Kansas City	40 55·327	−·021	40 55·306
32	Santa Fe	Colorado Springs	4 30·107	−·012	4 30·095
33	Salt Lake City	Colorado Springs	28 18·471	−·008	28 18·463
34	San Francisco	Salt Lake City	42 07·696	−·008	42 07·688
35	Portland	San Francisco	59·983	−·006	59·977
36	Portland	Walla Walla	17 19·503	+·004	17 19·507
37	Walla Walla	Salt Lake City	25 48·186	−·028	25 48·158
38	Portland	Seattle	1 22·486	−·006	1 22·480
39	Seattle	Walla Walla	15 57·028	−·001	15 57·027
40	Walla Walla	Helena	25 14·510	+·032	25 14·542
41	San Francisco	Sacramento	3 44·487	−·013	3 44·474
42	Sacramento	Los Angeles	12 56·840	−·014	12 56·826
43	San Francisco	Los Angeles	16 41·282	+·018	16 41·300
44	Los Angeles	Needles	14 36·728	−·003	14 36·725
45	Helena	Salt Lake City	33·577	+·039	33·616
46	Helena	Bismarck	45 00·839	+·012	45 00·851
47	Bismarck	Minneapolis	30 11·080	+·013	30 11·093
48	Cape May	Albany	4 43·020	+·033	4 43·053
49	Detroit	Albany	37 11·845	−·007	37 11·838
50	Chicago	Detroit	18 17·634	−·018	18 17·616
51	Minneapolis	Chicago	22 27·414	−·015	22 27·399
52	Omaha	Minneapolis	10 49·269	−·027	10 49·242
53	Los Angeles	San Diego	4 22·786	+·027	4 22·813
54	San Diego	Yuma	10 09·114	+·026	10 09·140
55	Los Angeles	Yuma	14 31·974	−·021	14 31·953
56	Yuma	Nogales	14 43·690	−·006	14 43·696
57	Nogales	El Paso	17 48·520	−·006	17 48·526
58	Montreal	Greenwich	4 54 18·67	−·036	4 54 18·634
59	El Paso	Little Rock	56 51·681	−·022	56 51·659
60	Needles	Santa Fé	34 38·032	−·001	34 38·031
61	El Paso	Santa Fé	2 10·593	−·012	2 10·581
62	El Paso	Austin	35 00·322	+·040	35 00·362
63	Austin	Galveston	11 47·087	+·009	11 47·096
64	Austin	New Orleans	30 40·230	+·031	30 40·261
65	Cambridge	Calais	15 23·187	+·002	15 23·189
66	Key West	Charleston	7 29·509	−·006	7 29·503
67	Atlanta	Key West	10 19·765	−·006	10 19·759
68	Little Rock	Atlanta	31 32·369	+·020	31 32·389
69	Charleston	Washington	11 31·888	+·035	11 31·923
70	Washington	Cambridge	23 41·138	−·031	23 41·107
71	Albany	Cambridge	10 28·926	+·020	10 28·946
72	Albany	Montreal	41·352	+·006	41·358

As a check of the correction, we have the relation $[p.\ vv] = -[w\ C]$. For the first term we have $+0{\cdot}02548$, and for the second $+0{\cdot}02547$, showing a satisfactory agreement.

Putting these results of the links together we obtain the final longitudes, as below:

Resulting longitudes, west of Greenwich.

Stations and local reference.	Longitude.		
	h.	*m.*	*s.*
Greenwich, England; transit circle, observatory	0	00	00·000
Paris, France; meridian of France, observatory	E0	09	20·968
Brest, France; tower of St. Louis	0	17	57·597
Foilhommerum, Ireland; transit	0	41	33·409
Heart's Content, Newfoundland; transit	3	33	29·788
St. Pierre Island, Miquelon Group; transit	3	44	42·427
Calais, Me.; transit	4	29	07·857
Duxbury, Mass.; transit	4	42	40·858
Cambridge, Mass.; dome of observatory, Harvard College	4	44	31·046
Montreal, Canada; transit McGill College Observatory	4	54	18·634
Albany, N. Y.; dome of Dudley Observatory, old site	4	54	59·992
Cape May, N. J.; transit	4	59	43·045
Washington, D. C.; dome of United States Naval Observatory, old site	5	08	12·153
Charleston, S. C.; transit	5	19	44·076
Key West, Fla.; transit	5	27	13·579
Detroit, Mich.; transit, 1891	5	32	11·830
Atlanta, Ga.; transit, 1896	5	37	33·338
Cincinnati, Ohio; dome of Mount Lookout Observatory	5	37	41·398
Louisville, Ky.; transit	5	43	03·636
Nashville, Tenn.; transit	5	47	08·083
Chicago, Ill.; transit, 1891	5	50	29·446
New Orleans, La.; transit, 1895	6	00	16·763
St. Louis, Mo.; transit, 1882, Washington University	6	00	49·256
Little Rock, Ark.; transit	6	09	05·727
Minneapolis, Minn.; transit	6	12	56·845
Kansas City, Mo.; transit	6	18	21·404
Galveston, Tex.; transit, 1895	6	19	09·928
Omaha, Nebr.; transit	6	23	46·087
Austin, Tex.; transit	6	30	57·024
Bismarck, N. Dak.; transit	6	43	07·938
Colorado Springs, Colo.; transit, 1886	6	59	16·710
Santa Fé, N. Mex.; transit	7	03	46·805
El Paso, Tex.; transit	7	05	57·386
Nogales, Ariz.; transit	7	23	45·912
Salt Lake City, Utah; transit	7	27	35·173
Helena, Mont.; transit	7	28	08·789
Needles, Cal.; transit	7	38	24·836
Yuma, Ariz.; transit	7	38	29·608
San Diego, Cal.; transit, 1892	7	48	38·748
Los Angeles, Cal.; transit, 1892	7	53	01·561
Walla Walla, Wash.; transit	7	53	23·331
Sacramento, Cal.; transit	8	05	58·387
Seattle, Wash.; transit	8	09	20·358
San Francisco, Cal.; transit, Lafayette Park	8	09	42·861
Portland, Oreg.; transit	8	10	42·838

Comparing the resulting longitudes of stations common to the two adjustments (that of 1884 a partial one and that of 1897 complete), we notice a small (about 0^s·08) but general increase in the longitudes. This is mainly due to the introduction of the fourth transatlantic determination, of 1892, which exceeds the older values by fully 0^s·1, and has a comparatively small probable error assigned to it. While our results are greatly improved, we can not but look upon the oldest (in 1866) direct connection with Greenwich as rather out of date respecting its large probable error. This is at once apparent by the fact that we have but 2 determinations of $\Delta\lambda$ between Foilhommerum and Greenwich, and but 3, with a fourth rejected, between Calais and Heart's Content,

and both links without interchange of place of observers. This being the weakest link in the chain, a patching up of the old line or an additional determination through one of the newer cables should receive further consideration.

The smallness of the corrections to the land lines is quite gratifying. The average correction to the 72 observed longitudinal differences is (without regard to sign) 0ˢ·020, with a maximum correction of 0ˢ·069, which falls alike upon the two weak links above referred to.

RECAPITULATION OF FORMULÆ FOR THE COMPUTATION OF PROBABLE ERRORS.

The mean error of an observation of unit weight is given by $m_1 = \sqrt{\frac{[p.vv]}{n}}$ where the sum $[p.vv]$ is found by means of the individual corrections and checked by the relation $[p{\cdot}vv] = -[wC]$.

To find the weight and probable error of the adjusted valne of an observation, also the weight P of any function of the adjusted observations, we put

$$F = f_1x_1 + f_2x_2 + f_3x_3 + \ldots\ldots$$

which function can not contain all the x's, but only $m - n$ of them. The coefficients f_1 are found by partial differentiation, viz:

$$\frac{\delta F}{dx_1} = f_1 \qquad \frac{\delta F}{dx_2} = f_2 \qquad \frac{\delta F}{dx_3} = f_3 \quad \text{etc.}$$

Forming next the sums, $\left[\frac{af}{p}\right]$, $\left[\frac{bf}{p}\right]$, $\left[\,p\,\right]$, etc., also $\left[\frac{ff}{p}\right]$, and combining them with the former normal equations and changing at the same time the former correlates into the new undetermined quantities R_1, R_2, R_3 . . . . , the requirement of the conditioned minimum leads to the following so-called transfer equations:

$$\begin{aligned}
[u.aa]R_1 + [u.ab]R_2 + [u.ac]R_3 + \ldots\ldots + [u.af] &= 0\\
+ [u.bb]R_2 + [u.bc]R_3 + \ldots\ldots + [u.bf] &= 0\\
+ [u.cc]R_3 + \ldots\ldots + [u.cf] &= 0\\
+ \ldots\ldots\ldots\ldots &
\end{aligned}$$

Solving, we have the values of R_1 and, consequently, also of F_1 by the relations

$$\begin{aligned}
F_1 &= f_1 + a_1R_1 + b_1R_2 + c_1R_3 + \ldots\ldots\\
F_2 &= f_2 + a_2R_1 + b_2R_2 + c_2R_3 + \ldots\ldots\\
F_3 &= f_3 + a_3R_1 + b_3R_2 + c_3R_3 + \ldots\ldots\\
&\ldots\ldots\ldots\ldots
\end{aligned}$$

Finally, we have the reciprocal of the weight P of the function F

$$1/P = [u.FF]$$

also the mean error of F

$$m_F = m_1/\sqrt{P} = m_1\sqrt{[u.FF]}$$

and the probable error of the same

$$r_F = 0{\cdot}6745\ m_F$$

Applying these formulæ to the present discussion, it will be found sufficient to compute the probable errors for two extreme positions only, say for Washington, D. C., and San Francisco, Cal., since the small difference in these values will permit a ready estimate, by inspection, of the probable error for any intermediate place.

For the mean error of a determination of weight one, we have

$$m_1 = \sqrt{\frac{0{\cdot}02547}{28}} = \pm 0^{s}{\cdot}0302.$$

The average weight is $[p] \Big/ m = \frac{53{\cdot}5}{72} = 0{\cdot}74$ hence mean error of an average determination of difference of longitude

$$m_1 \Big/ \sqrt{0{\cdot}74} = \pm 0^{s}{\cdot}035$$

also the probable error of the same $r = \pm 0^{s}{\cdot}024$.

For determining the probable error of the longitude of Washington we take the function $F=-f_{27}x_{27}+f_{58}x_{58}+f_{70}x_{70}$, which corresponds to the most direct connection.

We have

$f_{27}=-1$ also $[u.df]=-13$
$f_{58}=+1$ $[u.ef]=+4$
$f_{70}=+1$ $[u.gf]=+2$
$[u.hf]=+2$ all other terms in f are zero.

Similarly for San Francisco:

$$F=+f_4x_4+f_{20}x_{20}+f_{22}x_{22}+f_{25}x_{25}-f_{27}x_{27}+f_{34}x_{34}+f_{58}x_{58}+f_{70}x_{70}$$

hence

$[u.df]=-13$ $[u.mf]=+1$
$[u.ef]+4$ $[u.nf]-1$
$[u.gf]+3$ $[u.tf]-3$
$[u.hf]+2$ $[u.uf]+3$
$[u.if]-1$ $[u.xf]-1$
$[u.lf]-2$ $[u.af]+1$ the remaining terms are zero.

Introducing these values in the place of the corresponding numerical terms in the normal equations and re-solving, we get the following values for R_i, F_i, and of $[u.FF]$ for the two places:

Values of R_i.

	Washington.	San Francisco.		Washington.	San Francisco.		Washington.	San Francisco.		Washington.	San Francisco.
1	+·0636	+·064	8	—·3797	—·266	15	—·0561	+·415	22	—·0123	+·236
2	—·0623	—·062	9	—·1069	+·324	16	—·0069	—·101	23	—·0041	+·079
3	+·1837	+·184	10	—·0689	+·207	17	—·0109	+·158	24	—·0157	+·339
4	+·4822	+·482	11	—·0229	+·069	18	—·0123	+·166	25	+·0052	—·112
5	—·4291	—·434	12	+·0433	+·859	19	—·0271	+·347	26	—·0189	—·163
6	—·1177	—·257	13	—·1141	—·355	20	—·0397	+·580	27	—·0072	—·168
7	—·2076	—·426	14	—·0579	+·560	21	—·0340	—·243	28	—·0008	—·018

It will not be necessary to tabulate here the 72 values of F_i and of $w.FF$; we find

For Washington, D. C.

$[u.FF]=5·864$
$m_1\sqrt{[u.FF]}=\pm 0^s·030\ \sqrt{5·864}=\pm 0^s·073$
and probable error of longitude $=\pm 0·049$

For San Francisco, Cal.

$[u.FF]=7·306$
$m_1\sqrt{[u.FF]}=\pm 0^s·082$
$r=\pm 0^s·055$

It will be seen from these results that we are justified in assigning to any of our American longitude results a probable error of about $\pm 0^s·052$, equivalent to $\pm 0''·78$, which, in latitude 39°, represents a linear extension of but 18·8 metres, or 61·7 feet nearly. Compared with the probable error deduced for Washington in the discussion of 1884 the present value is $0^s·007$ larger, which is evidently to be ascribed to the greater diversity in the cable results. Even this small probable error of $\pm 0^s·05$ could, if desired, be further diminished either by re-observing the two weak links or by introducing a new cable determination, as already mentioned.

JUNCTION OF THE NORTH AMERICAN AND EUROPEAN SYSTEMS OF LONGITUDE.

At present the connection of these systems is still somewhat embarrassed by the unsettled state of the question, "what is the most probable difference of longitude between Greenwich and Paris?" The determinations of 1888 and 1892 by the English observers agree and give $9^m\ 20^s·84$ nearly, while the corresponding French determinations also agree among themselves, but give $9^m\ 21^s·05$ nearly. The difference of $0^s·2$ remains as yet unexplained.

In the last adjustment of the European or eastern longitude net in the Astronomische Nachrichten, No. 3202, October, 1893, vic, "Résultats d'une compensation du réseau des longitudes, determinées dupuis 1860 en Europe, en Algerie et en quelques stations en Asie, par H. G. van de Sande Bakhuyzen," the author evades the issue by making two independent adjustments—once

with the English (adjusted $9^m\ 20^s{\cdot}930$) and then with the French value (adjusted $9^m\ 21^s{\cdot}001$).* The result from the measure of the American party in August and September, 1872, was $9^m\ 21^s{\cdot}000 \pm 0^s{\cdot}038$, the correction to this value by the present adjustment is $-0^s{\cdot}032$, hence the resulting difference $9^m\ 20^s{\cdot}968$, which is so close to the average of the English and French values as to indicate but a small preference for the latter one.*

ADDITIONAL PROMINENT LONGITUDE STATIONS.

There are two stations, though not forming part of the preceding adjustment, yet from their importance of position and astronomical work, and in view of their direct connection with the Coast and Geodetic Survey system of longitude, must be included in this discussion. They are the United States Naval Observatory at its new site in Washington, D. C., northwest, and the Lick Observatory, on Mount Hamilton, California. The old and new location of the former were directly connected on eleven nights in March and April, 1893, by observers attached to the observatory. In June and July, 1896, the Coast and Geodetic Survey established a new longitude station in the grounds about the office, near and south of the Capitol in Washington, and in May and June, 1897, made the connections between it and both the old and new sites of the Naval Observatory. The abstracts of the individual results for difference of longitude are herewith presented. Respecting the second station there is only one but direct connection with our longitude station at San Francisco; it was made in October and November, 1888, by a Coast and Geodetic Survey party. The abstract of the results is appended.

We also give here the connection with our system in September, 1886, of the United States Engineers' observatory at Ogden, Utah, on account of its prominence in the determinations of geographic positions west of the one hundredth meridian.†

This observatory was erected in 1873, but has been abandoned for many years. It is directly connected with the Salt Lake station, as shown by the abstract of results. The value adopted by the United States Engineers was $7^h\ 27^m\ 59^s{\cdot}643$. This refers to the east pier in the western room.

The longitude work done by the United States Lake Survey depends on the longitude of the observatory at Detroit, Mich.‡ It was built in 1871 and connected with the Coast and Geodetic Survey station of 1891. The longitude of this observatory, east pier, adopted by the United States Lake Survey was $5^h\ 32^m\ 12^s{\cdot}24 \pm 0^s{\cdot}08$.

(73) DIFFERENCE OF LONGITUDE BETWEEN WASHINGTON, D. C., UNITED STATES NAVAL OBSERVATORY, NEW SITE, AND WASHINGTON, D. C., UNITED STATES NAVAL OBSERVATORY, OLD SITE.

This work was executed by Prof. J. R. Eastman and Assistant Astronomer A. N. Skinner. The results given below are taken from Astronomy and Astro-Physics, Vol. XII, pp. 699–700.

The observers exchanged places, Professor Eastman observing six nights at the new site and five nights at the old site.

Date.	Difference of longitude, $\Delta\lambda$.	Probable error.
1893.	*s.*	*s.*
March 9	3·696	±0·011
13	·630	·028
16	·778	·024
28	·732	·021
31	·677	·025
April 4	·628	·022
5	·712	·036
21	·624	·021
24	·599	·018
27	·746	·018
28	·632	·018
Weighted mean	3·6738	±0·012

* In the publication of the International Geodetic Association, "Die Europaische Längengradmessung in 52 Grad Breite, von Greenwich bis Warschau," Part II, A. Börsch & L. Krüger, Berlin, 1896, the adjustment containing the French value has been preferred. (Chapter 3, p. 31.)

† United States Geographical Surveys West of the One Hundredth Meridian; Lieut. G. M. Wheeler, Corps of Engineers, U. S. A.; Vol. II. Astronomy and Barometric Hypsometry, Washington, D. C., 1877.

‡ Professional Papers, Corps of Engineers, U. S. A., No. 24, Washington, D. C., 1882, page 715 and foll.

The transit at the old site was mounted on the old transit circle pier 76·8 feet (0ˢ·0656) *west* of the reference meridian.

The transit at the new site was mounted on the west transit-circle pier, 81·8 feet (0ˢ·0690) *west* of the reference meridian (clock room).

$\Delta\lambda$, Washington, United States Naval Observatory, new site (clock room)—Washington, United States Naval Observatory, old site (D) = 3ˢ·670 ± 0ˢ·012.

(74) DIFFERENCE OF LONGITUDE BETWEEN WASHINGTON, D. C., UNITED STATES NAVAL OBSERVATORY (OLD SITE) AND WASHINGTON, D. C., COAST AND GEODETIC SURVEY OFFICE STATION.

Date.	Observers at— Obs'y.	Office.	From western or observatory signals.	From eastern or office signals.	W—E	Mean of W. and E. signals.	Personal equation.	Difference of longitude Δλ	p.	v.
1896.			m. s.	m. s.	s.	m. s.	s.	m. s.		s.
June 22	C. H. Sinclair.	G. R. Putnam.	0 10·738	0 10·729	0·009	0 10·733	−0·117	0 10·616	8	+0·030
22			·703	·684	·019	·694		·577	8	— ·009
26			·693	·675	·018	·684		·567	3	— ·019
28			·764	·752	·012	·758		·641	6	+ ·055
28			·733	·721	·012	·727		·610	6	+ ·024
29			·716	·679	·037	·698		·581	3	— ·005
30			·690	·697	—·007	·693		·576	5	— ·010
July 1			·660	·662	—·002	·661		·544	9	— ·042
				Mean	·012	0 10·706				
June 26	G. R. Putnam.	C. H. Sinclair.	0 10·391	0 10·374	·017	0 10·382	+0·117	·499	3	— ·087
29			·455	·439	·016	·447		·564	3	— ·022
29			·502	·479	·023	·490		·607	3	+ ·021
30			·467	·479	—·012	·473		·590	5	+ ·004
30			·480	·471	·009	·476		·593	5	+ ·007
July 1			·479	·478	·001	·478		·595	9	+0·009
				Mean	0·009	0 10·458		0 10·583		
				Weighted mean				0 10·586 ± 0ˢ·008		

Transmission time: 0ˢ·005 ± 0ˢ·001.

Personal equation: S.—P. = +0ˢ·124; same from those nights on which the observers changed places +0·117 ± 0ˢ·008.

Transit No. 18 was set over the station established in 1878 in the grounds of the United States Naval Observatory (old site), now the Museum of Hygiene. It is 44·714 metres or 0ˢ·124 *west* of the small central dome (center) of the building.

Transit No. 19 was mounted on the east pier in the small wooden observatory in the lot adjacent to and south of the Coast and Geodetic Survey Office building on Capitol Hill. This pier is 27·75 metres or 0ˢ·077 west of the flagstaff of the main building (of 1871).

$\Delta\lambda$, Washington, United States Naval Observatory, old site (D) — Coast and Geodetic Survey Office ($T_{1896\text{-}97}$) = 10ˢ·462 ± 0ˢ·008.

(75) DIFFERENCE OF LONGITUDE BETWEEN WASHINGTON, D. C., UNITED STATES NAVAL OBSERVATORY (NEW SITE) AND WASHINGTON, D. C., COAST AND GEODETIC SURVEY OFFICE STATION.

Date.	Observers at— Obs'y.	Office.	From western or observatory signals.	From eastern or office signals.	W—E	Mean of W. and E. signals.	Personal equation.	Difference of longitude $\Delta\lambda$	p.	v.
1897.			m. s.	m. s.	s.	m. s.	s.	m. s.		s.
May 25	C. H. Sinclair.	O. B. French.	0 14·249	0 14·249	0·000	0 14·249	—0·225	0 14·024	7	+0·028
26			·251	·248	·003	·250		14·025	5	+ ·029
27			·216	·222	—·006	·219		13·994	12	— ·002
29			·192	·191	·001	·191		13·966	11	— ·030
				Mean	·000	0 14·227				
June 1	O. B. French.	C. H. Sinclair.	0 13·769	0 13·774	—·005	0 13·772	+0·225	13·997	10	+ ·001
2			·778	·772	·006	·775		14·000	7	+ ·004
5			·753	·751	·002	·752		13·977	2	—0·019
				Mean	0·001	0 13·766		0 13·998		
				Weighted mean				0 13·996 ± 0s·006		

Transmission time: 0s·000 ± 0s·001.

Personal equation: S.—F.= +0s·230 ± 0s·004; same from weighted means, +0s·225.

At the United States Naval Observatory (new site) transit No. 18 was mounted due south of the east transit. This east transit is 82 feet (0s·069) *east* of the meridian (clock room) of the observatory.

At the Coast and Geodetic Survey Office transit No. 19 was mounted on the east pier in the small wooden observatory in the lot just south of the office building.

$\Delta\lambda$, Washington, United States Naval Observatory, new site, (clock room) — Washington, Coast and Geodetic Survey Office ($T_{1896\text{-}97}$) = 14s·065 ± 0s·006.

(76) DIFFERENCE OF LONGITUDE BETWEEN SAN FRANCISCO, CAL., AND MOUNT HAMILTON, CAL.[1]

Date.	Observers at— San F.	Mt. H.	From western or San Francisco signals.	From eastern or Mt. Hamilton signals.	W—E	Mean of W. and E. signals.	Personal equation.	Difference of longitude $\Delta\lambda$	p.	v.
1888.			m. s.	m. s.	s.	m. s.	s.	m. s.		s.
Oct. 23	C. H. Sinclair.	R. A. Marr.	3 09·099	3 09·076	0·023	3 09·088	—0·140	3 08·948	9	—0·099
30			·180	·148	·032	·164		09·024	9·5	— ·023
31			·138	·128	·010	·133		08·993	6	— ·054
Nov. 1			·263	·259	·004	·261		09·121	7	+ ·074
2			·221	·213	·008	·217		09·077	6	+ ·030
5			·248	·244	·004	·246		09·106	12	+ ·059
					·014	3 09·185				
Nov. 23	R. A. Marr.	C. H. Sinclair.	3 08·899	3 08·894	·005	3 08·896	+0·140	09·036	2	— ·011
24			·885	·864	·021	·874		09·014	2·5	— ·033
26			·953	·935	·018	·944		09·084	5	+ ·037
27			·910	·902	·008	·906		09·046	2	— ·001
28			·875	·857	·018	·866		09·006	2	—0·041
				Mean	0·014	3 08·898		3 09·041		
				Weighted mean				3 09·047 ± 0s·013		

[1] Cf. — Appendix No. 8, C. & G. S. Report for 1889.

Transmission time: 0s·007 ± 0s·001.

Personal equation: S. — M. = + 0s·144 ± 0s·011; same from weighted means, + 0s·140.

At San Francisco transit No. 18 was mounted in the Lafayette Park Observatory, established by Assistant G. Davidson in 1881, on the eastern or small transit pier. This small pier is 5 feet 2 inches (0s·004) east of the western pier, to which latter all longitude measures have been referred.

At Mount Hamilton transit No. 19 was mounted about a quarter of a mile to the eastward of the Lick Observatory. Reduction to Lick Observatory meridian of reference (Transit House) 1ˢ·085.

$\Delta\lambda$, San Francisco, Lafayette Park ($T_{1881-87}$) — Lick Observatory (T. H.) = $3^m\ 07^s{\cdot}966 \pm 0^s{\cdot}013$.

(77) DIFFERENCE OF LONGITUDE BETWEEN OGDEN, UTAH, AND SALT LAKE CITY, UTAH.

Date.	Observers at— Og.	Observers at— S. L. C.	From western or Ogden signals.	From eastern or Salt Lake City signals.	W — E	Mean of W. and E. signals.	Personal equation.	Difference of longitude $\Delta\lambda$	p.	v.
1886.			m. s.	m. s.	s.	m. s.	s.	m. s.		s.
Sept. 12	R. A. Marr.	C. H. Sinclair.	0 24·273	0 24·265	0·008	0 24·269	+0·297	0 24·566	2	+0·033
13			·214	·215	—·001	·214		·511	1·5	— ·022
14			·320	·323	—·003	·322		·619	1·5	+ ·086
15			·201	·197	·004	·199		·496	5	— ·037
16			·262	·249	·013	·256		·553	1·5	+ ·020
				Mean	·004	0 24·252				
Sept. 17	C. H. Sinclair.	R. A. Marr.	0 24·909	0 24·905	·004	0 24·907	—0·297	·610	2·5	+ ·077
18			·834	·827	·007	·830		·533	2	·000
19			·836	·827	·009	·832		·535	2	+ ·002
20			·773	·764	·009	·768		·471	2	— ·062
21			·806	·793	·013	·800		·503	2·5	—0·030
				Mean	0·008	0 24·827		0 24·540		
				Weighted mean				0 24·533 ± 0ˢ·011		

Transmission time: $0^s{\cdot}003 \pm 0^s{\cdot}001$.

Personal equation: S. — M. = $+ 0^s{\cdot}288 \pm 0^s{\cdot}008$; same from weighted means, + 0·297.

At Ogden transit No. 6 was mounted on the east pier in the west wing of the observatory built by the United States engineers in 1873. For description see Volume II of Lieut. G. M. Wheeler's report upon United States Geographical Surveys, Washington, 1877.

At Salt Lake City transit No. 4 was mounted over the station established in 1869 in the southeast corner of Temple Square.

$\Delta\lambda$, Ogden (T_{1886}) — Salt Lake City ($T_{1869-90}$) = $0^m\ 24^s{\cdot}533 \pm 0^s{\cdot}011$.

Adjustment of the longitude triangle Naval Observatory, old site, Naval Observatory, new site, and Coast and Geodetic Survey Station.

Date.	Western station.	Eastern station.	Observed $\Delta\lambda$	Probable error.	Correction.	Adjusted $\Delta\lambda$
			s.	s.	s.	s.
1893, March and April	Naval Obser'y, new site.	Naval Obser'y, old site	3·670	±0·012	—·039	3·631
1896, June and July	Naval Obser'y, old site.	C. and G. Survey office	10·462	±0·008	—·018	10·444
1897, May and June	Naval Obser'y, new site.	C. and G. Survey office	14·065	±0·006	+·010	14·075

Observation equation: $0 = + 0{\cdot}067 + (1) + (2) - (3)$.

Assigning weights inversely proportional to the squares of the probable errors, we have

Correlate.	Correction.	(1)	(2)	(3)
	$u = \frac{1}{p}$	144	64	36
C_1	+·067	+1	+1	−1

Normal equation: $0 = + 0{\cdot}067 + 244\ C_1$

$C_1 = -{\cdot}000275$

(1) = —·039

(2) = —·018

(3) = +·010

(*a*) The longitude of the Naval Observatory, old site, was fixed by the main adjustment. Hence we have

Station.	Longitude west of Greenwich. h.	m.	s.	s.
United States Naval Observatory, old site, dome	5	08	12·153	±0·049
United States Naval Observatory, new site, clock room	5	08	15·784	
United States Coast and Geodetic Survey office, transit	5	08	01·709	

To each of the two last results a probable error of ± 0ˢ·052 may be assigned.

(*b*) The longitude of the Lick Observatory, referred to the transit house meridian on Mount Hamilton, California, becomes:

	h.	m.	s.	s.
San Francisco, Lafayette Park Observatory	$\lambda=$ 8	09	42·861	±0·055
Observed difference of longitude	$\Delta\lambda=$	3	07·966	±0·013
Lick Observatory, transit house, Mount Hamilton	$\lambda=$ 8	06	34·895	±0·057

(*c*) The difference of longitude between Ogden and Salt Lake—

	h.	m.	s.	s.
As determined in 1886 was	$\Delta\lambda=$ 0	00	24·533	±0·011
Adjusted longitude of Salt Lake station	$\lambda=$ 7	27	35·173	±0·054
Longitude of Ogden, United States Engineers' Observatory, west room, east transit	$\lambda=$ 7	27	59·706	±0·055

(*d*) The astronomic observatory at Detroit used for longitude determinations by the United States Lake Survey was found to be 0ˢ·366 west of the Coast and Geodetic Survey station of 1891:

	h.	m.	s.	s.
Adjusted longitude of Detroit (T_{1891})	$\lambda=$ 5	32	11·830	±0·050
Longitude of United States Lake Survey Observatory at Detroit	$\lambda=$ 5	32	12·196	±0·050

In conclusion, I desire to express my appreciation of the effective help rendered by Mr. D. L. Hazard, of the Computing Division, in the computations connected with this paper.

C. A. SCHOTT, *Assistant.*

COMPUTING DIVISION, *June 30, 1897.*

Blank page retained for pagination

U. S. COAST AND GEODETIC SURVEY
W. W. Duffield, Superintendent

TELEGRAPHIC LONGITUDE NET OF THE UNITED STATES AND ITS CONNECTION WITH THAT OF EUROPE

1866–1896

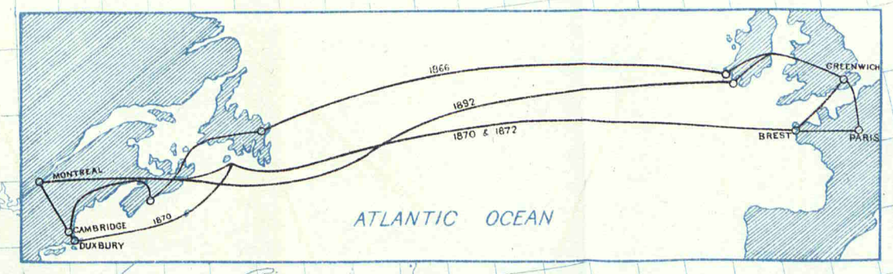

SEATTLE
PORTLAND
WALLA WALLA
HELENA
BISMARK
MINNEAPOLIS
SALT LAKE CITY
SACRAMENTO
SAN FRANCISCO
OMAHA
COLORADO SPRINGS
KANSAS CITY
CHICAGO
DETROIT
MONTREAL
CALAIS
BOSTON
DUXBURY
ALBANY
CAPE MAY
WASHINGTON
CINCINNATI
ST. LOUIS
LOUISVILLE
NASHVILLE
ATLANTA
CHARLESTON
LOS ANGELES
NEEDLES
SANTA FE
SAN DIEGO
YUMA
NOGALES
EL PASO
LITTLE ROCK
AUSTIN
GALVESTON
NEW ORLEANS
KEY WEST

To Greenwich via Canso and Waterville 1892
To Greenwich via Newfoundland 1866
Via St. Pierre & Brest
1872
To Brest 1870

U. S. Coast and Geodetic Survey

BASE MAP OF THE UNITED STATES

(Projected on intersecting cone)

Scale 1 : 10 000 000

1896

Statute Miles 100 50 0 100 200 300 400

Kilometres 100 50 0 100 200 300 400 500 600 700 800

THE NORRIS PETERS CO., LITHO., WASHINGTON, D. C.

APPENDIX NO. 3.—1897.

RESULTING LONGITUDES OF KADIAK, UNALASKA AND UNGA, ALASKA, AS DETERMINED CHRONOMETRICALLY FROM SITKA IN 1896, BY THE PARTY UNDER THE CHARGE OF FREMONT MORSE, ASSISTANT.

Report by C. A. SCHOTT, Assistant.

Blank page retained for pagination

APPENDIX NO. 3.—1897.

RESULTING LONGITUDES OF KADIAK, UNALASKA AND UNGA, ALASKA, AS DETERMINED CHRONOMETRICALLY FROM SITKA IN 1896, BY THE PARTY UNDER THE CHARGE OF FREMONT MORSE, ASSISTANT.

Report by CHARLES A. SCHOTT, *Assistant.*

OFFICE OF THE COAST AND GEODETIC SURVEY, COMPUTING DIVISION,
Washington, D. C., April 6, 1897.

SIR: I have the honor to submit herewith a report on the resulting *longitudes* of *Kadiak*, of *Unalaska* and of *Unga*, Alaska, as determined chronometrically from Sitka, Alaska, between April and August, 1896, Assistant F. Morse in charge of the work.

At *Sitka* Mr. Morse observed for time at the astronomic station of 1892, in front of the Presbyterian church.

Instruments: Meridian telescope No. 16 and sidereal chronometer Hutton, 194; mean time chronometer Bliss, No. 2821, and sidereal chronometer Negus, No. 1825, were kept rated at the station by means of comparisons with observing chronometer.

At *Kadiak* Assistant H. P. Ritter observed for time at a station about 500 metres north of the Alaska Commercial Company's wharf and distant about two kilometres southwesterly from the old astronomic station of 1867.

Instruments: Meridian telescope No. 1 and sidereal chronometer Frodsham, No. 3462; the chronometers sidereal Negus, No. 1769, and mean times Fletcher, No. 1713, and Hutton, No. 208, were kept rated by means of comparisons.

At *Unalaska* Mr. O. B. French observed for time at a station near the center of the town of Unalaska and about one-third of a mile east of the end of the spit. The new station was connected with the old one on Amaknak Island, approximately.

Instruments: Meridian telescope No. 9 and sidereal chronometer Negus, No. 1771; the chronometers mean time Dent, No. 2167, and Fletcher, No. 1507, and sidereal Negus, No. 1824 were kept rated by means of comparisons.

At *Unga* Island, one of the Shumagin group, Mr. French, during a short stop of the mail steamer *Dora*, observed for local time by means of a sextant and artificial horizon, and by comparison with the rated chronometers on board determined the longitude of Unga.

On board the *Dora* Assistant F. A. Young had charge of the 21 chronometers, which were compared daily.

Four round trips were made between Sitka and Unalaska, with stoppage on the way at the intermediate station, Kadiak. The general arrangement of the longitude work was similar to that of recent years in Alaska, and the method of reduction, and in particular that of giving weights to individual chronometers and individual trips, is the same as that followed heretofore and explained in detail in Appendix No. 3, Coast and Geodetic Survey Report for 1894. The following tabular results, therefore, will require no further explanation. The office computation

was made by Mr. D. L. Hazard, who compared his results, as far as practicable, with the rougher field computations:

Summary of results for difference of longitude of Sitka and Kadiak, Alaska.

FIRST COMBINATION: RESULTS OF FOUR ROUND TRIPS, STARTING FROM SITKA.

Chronometers.	1st trip, Apr. 8–May 3.	2d trip, May 7–June 3	3d trip, June 8–July 2.	4th trip, July 9–Aug. 1.	Wt.	Weighted mean.
	h. *m.* *s.*	*h.* *m.* *s.*	*h.* *m.* *s.*	*h.* *m.* *s.*		*h.* *m.* *s.*
557 M. T.	1 08 12·29	1 08 13·93	1 08 13·55	1 08 13·90	114	1 08 13·54
2126 "	12·23	09·68	13·19	10·60	1	11·40
2535 "	09·84	14·56	12·14	16·57	9	13·43
1510 "	09·98	13·26	13·13	15·57	3	13·16
1707 "	15·19	14·54	12·58	13·57	5	13·82
214 "	14·47	15·64	12·87	13·90	17	14·22
297 "	20·97	13·72	13·96	14·37	5	15·09
229 "	12·21	15·37	13·21	13·24	9	13·75
2256 "	12·63	14·39	13·61	13·44	14	13·67
231 "	11·85	14·04	12·31	13·02	8	12·93
1542 "	12·48	13·71	13·41	13·92	45	13·46
1572 "	11·55	13·76	15·14	14·43	19	13·98
1838 Sid.	12·32	14·66	14·09	14·56	29	14·08
202 "	12·70	12·96	13·10	14·29	14	13·23
215 "	14·42	12·73	13·19	14·95	2	13·59
207 "	13·50	13·50	14·10	14·23	86	13·84
1589 "	12·40	14·01	14·59	14·07	28	13·95
1818 "	14·53	16·33	12·52	14·24	19	14·40
220 "	13·33	15·49	13·94	14·46	8	14·44
380 "	09·98	15·00	14·21	14·87	10	13·92
387 "	14·32	14·11	13·77	14·10	30	14·03
Mean	1 08 13·01	1 08 14·07	1 08 13·46	1 08 14·11	475	1 08 13·71
Weighted mean	12·85	14·10	13·69	14·12		13·77
p	4	8	8	5		
	Weighted mean					$1^h\ 08^m\ 13^s{\cdot}77 \pm 0^s{\cdot}17$

SECOND COMBINATION: RESULTS OF FOUR ROUND TRIPS STARTING FROM KADIAK.

Chronometers.	1st trip, Apr. 25–May 16.	2d trip, May 29–June 15.	3d trip, June 26–July 16.	Odd half trips: Apr. 8–25; July 16–Aug. 1.	Wt.	Weighted mean.
	h. *m.* *s.*	*h.* *m.* *s.*	*h.* *m.* *s.*	*h.* *m.* *s.*		*h.* *m.* *s.*
557 M. T.	1 08 13·05	1 08 12·81	1 08 14·41	1 08 13·94	114	1 08 13·47
2126 "	14·06	16·80	12·50	07 47·18	1	11·52
2535 "	14·03	13·67	14·24	08 07·70	9	13·27
1510 "	16·25	13·31	14·78	00·68	3	13·10
1707 "	16·77	14·60	14·51	03·42	5	13·89
214 "	16·26	13·36	14·81	10·46	17	14·22
297 "	13·99	14·52	15·59	19·38	5	15·24
229 "	11·71	12·60	13·52	21·36	9	13·62
2256 "	11·54	12·93	13·86	19·41	14	13·57
231 "	13·96	13·50	14·65	03·69	8	12·87
1542 "	14·09	13·65	13·95	09·82	45	13·43
1572 "	12·80	14·10	13·09	18·17	19	13·92
1838 Sid.	13·25	13·82	13·32	18·22	29	14·01
202 "	14·52	13·63	14·10	06·70	14	13·23
215 "	17·93	15·99	13·81	07 56·85	2	13·72
207 "	14·37	14·33	13·49	08 12·24	86	13·86
1589 "	13·21	12·79	14·30	17·71	28	13·89
1818 "	14·26	14·43	12·92	18·22	19	14·36
220 "	12·39	13·31	13·93	23·11	8	14·34
380 "	17·22	13·17	13·79	08·28	10	13·86
387 "	14·91	15·29	13·35	10·34	30	14·07
Mean	1 08 14·31	1 08 13·93	1 08 13·95	1 08 10·80	475	1 08 13·69
Weighted mean	13·86	13·65	13·91	13·32		13·74
p	7	9	8	3		
	Weighted mean					$1^h\ 08^m\ 13^s{\cdot}74 \pm 0^s{\cdot}07$

Summary of results for difference of longitude of Sitka and Unalaska, Alaska.

FIRST COMBINATION: RESULTS OF FOUR ROUND TRIPS STARTING FROM SITKA.

Chronometers.	1st trip, Apr. 8—May 3.	2d trip, May 7—June 3.	3d trip, June 8—July 2.	4th trip, July 9—Aug. 1.	Wt.	Weighted mean.
	h. *m.* *s.*	*h.* *m.* *s.*	*h.* *m.* *s.*	*h.* *m.* *s.*		*h.* *m.* *s.*
557 MT	2 04 46·33	2 04 46·70	2 04 45·53	2 04 46·83	114	2 04 46·33
2126 "	47·39	41·04	47·85	43·81	1	45·11
2535 "	44·09	44·86	47·15	51·06	9	47·05
1510 "	45·67	45·43	47·21	47·98	3	46·69
1707 "	49·01	48·16	46·15	45·43	5	47·03
214 "	46·44	48·70	43·39	45·49	17	45·83
297 "	57·91	46·16	45·95	48·87	5	49·47
229 "	45·19	47·69	46·35	44·65	9	45·92
2256 "	47·77	47·17	46·31	47·10	14	47·04
231 "	46·59	46·55	44·30	45·84	8	45·74
1542 "	46·71	46·30	46·38	46·62	45	46·50
1572 "	45·66	45·76	49·13	47·76	19	47·23
1838 Sid.	46·63	48·00	47·31	47·34	29	47·32
202 "	47·04	45·39	46·14	46·96	14	46·40
215 "	50·86	45·02	47·26	46·60	2	47·38
207 "	48·06	45·92	47·76	46·96	86	47.20
1589 "	46.60	46·45	47·56	47·21	28	47.00
1818 "	48·76	50·06	45·81	46·89	19	47·71
220 "	47·72	48·98	47·20	47·68	8	47·84
380 "	43·60	47·29	48·30	46·43	10	46·51
387 "	50·02	47·02	48·93	47·12	30	48·24
Mean	2 04 47·53	2 04 46·60	2 04 46·76	2 04 46·89	475	2 04 46·93
Weighted mean	47·16	46·76	46·72	46·94		46·89
p	4	4	5	5		
	Weighted mean			$2^h\ 04^m\ 46^s{\cdot}89 \pm 0^s{\cdot}07$		

SECOND COMBINATION: RESULTS OF FOUR ROUND TRIPS STARTING FROM UNALASKA.

Chronometers.	1st trip, Apr. 20–May 23.	2d trip, May 24–June 19.	3d trip, June 21–July 20.	Odd half trips, Apr. 8–20, July 20–Aug. 1.	Wt.	Weighted mean.
	h. *m.* *s.*	*h.* *m.* *s.*	*h.* *m.* *s.*	*h.* *m.* *s.*		*h.* *m.* *s.*
557 M. T.	2 04 46·98	2 04 45·36	2 04 46·00	2 04 47·19	114	2 04 46·30
2126 "	49·88	52·45	49·37	28·15	1	45·62
2535 "	46·42	47·05	50·02	43·58	9	46·96
1510 "	54·05	44·59	50·57	38·08	3	46·91
1707 "	51·15	48·71	49·45	39·33	5	47·37
214 "	47·51	45·09	47·84	43·29	17	45·99
297 "	48·85	50·59	44·76	54·65	5	49·49
229 "	43·37	43·66	45·62	51·12	9	45·80
2256 "	45·17	45·32	45·83	52·02	14	46·92
231 "	49·05	46·13	48·16	39·90	8	45·96
1542 "	48·49	46·47	47·02	44·22	45	46·57
1572 "	45·18	46·68	46·20	50·42	19	47·04
1838 Sid.	47·07	46·16	45·86	50·41	29	47·22
202 "	49·48	46·65	47·59	42·10	14	46·53
215 "	55·35	51·22	47·87	35·86	2	47·79
207 "	48·61	47·95	46·11	46·34	86	47·23
1589 "	47·30	44·83	46·05	50·12	28	46·89
1818 "	47·12	47·21	46·39	50·58	19	47·71
220 "	44·63	45·96	46·49	54·32	8	47·67
380 "	52·92	45·22	46·57	42·00	10	46·59
387 "	49·48	49·83	48·07	45·77	30	48·36
Mean	2 04 48·48	2 04 47·01	2 04 47·23	2 04 45·21	475	2 04 47·00
Weighted mean	47·76	46·53	46·57	46·90		46·90
p.	4	5	5	4		
	Weighted mean $2^h\ 04^m\ 46^s{\cdot}90 \pm 0^s{\cdot}19$					

LONGITUDE OF KADIAK, KADIAK ISLAND, ALASKA.

	h.	m.	s.	s.
Weighted mean by first combination	1	08	13·77±0·17	
Weighted mean by second combination			13·74±0·07	
Mean, Kadiak west of Sitka	1	08	13·76±0·12±0·10	for personal eq'n.
λ Sitka, astro'c station of 1892 (Rep. 1894, Part II, p. 83)	9	01	21·48±0·13	
λ Kadiak, astro'c station of 1896	10	09	35·24±0·20	or 152° 23′ 48″·6±3″·0

LONGITUDE OF UNALASKA, UNALASKA ISLAND, ALASKA.

	h.	m.	s.	s.
Weighted mean by first combination	2	04	46·89±0·07	
Weighted mean by second combination			46·90±0·19	
Mean, Unalaska west of Sitka	2	04	46·89±0·13±0·10	for personal eq'n.
λ Sitka, astro'c station of 1892	9	01	21·48±0·13	
λ Unalaska, astro'c station of 1896	11	06	08·37±0·21	or 166° 32′ 05″·55±3″·2

LONGITUDE OF UNGA, UNGA ISLAND, ALASKA.

	h.	m.	s.	
Unga, east of Unalaska, astro'c station of 1896	0	24	07·8	
λ Unalaska, astro'c station of 1896	11	06	08·37	
λ Unga, astro'c station of 1896 (July 25th)	10	42	00·6	or 160° 30′ 09″

All of these results are of excellent character.

Yours, respectfully,

CHAS. A. SCHOTT,
Assistant, in charge C. D.

Gen. W. W. DUFFIELD,
Superintendent Coast and Geodetic Survey.

APPENDIX NO. 4—1897.

RESULTING HEIGHTS FROM SPIRIT LEVELING BETWEEN HOLLIDAY AND SALINA, KANS. FROM OBSERVATIONS BY I. WINSTON, ASSISTANT, BETWEEN JULY 11 AND OCTOBER 28, 1895.

Report by C. A. SCHOTT, Assistant.

Blank page retained for pagination

APPENDIX NO. 4—1897.

RESULTING HEIGHTS FROM SPIRIT LEVELING BETWEEN HOLLIDAY AND SALINA, KANS. FROM OBSERVATIONS BY I. WINSTON, ASSISTANT, BETWEEN JULY 11 AND OCTOBER 28, 1895.

Submitted for publication by CHAS. A. SCHOTT, Assistant, in charge Computing Division, November 13, 1897.

The following results of heights of spirit leveling between Holliday and Salina, Kans., are herewith respectfully submitted. This is in continuation of the line of levels starting from bench mark (K_3) on the bridge across the Mississippi at St. Louis, Mo., and running westward via Jefferson City and Kansas City to Holliday, about 22 kilometres or 14 statute miles westerly of Kansas City.* The present extension carries the line 276 kilometres, or 171½ miles (nearly), westward along the Atchison, Topeka and Santa Fé Railroad to Topeka, Kans., and thence along the Union Pacific Railroad to Salina. The line begins at bench mark LXIII and ends at bench mark H_1. The heights are relative, and refer to the so-called "City directrix" at St. Louis as the zero or starting level. This level has been transferred to bench mark K_3 at the St. Louis bridge. Should absolute heights be desired this starting level may be taken as 125.8 meters, or 412·7 feet, above the Gulf of Mexico; the exact elevation can only be given after the connecting lines are all completed and adjusted.

Instruments.—Micrometer spirit level No. 5 was used. The constants of this instrument were determined in 1895–96, and the same were employed in the present computation. They are given in last year's Report, Appendix No. 3.† The wooden metric rods P and Q,‡ soaked in paraffin, had their graduation and index corrections determined as follows:

Length of rods between graduations, 0·1 m. and 3·0 m. at 24° C.

Rod P	March, 1895,	2·90005 m.	and rod Q	March, 1895,	2·90008 m.
	June, 1896,	2·90161		June, 1896,	2·90138

the last determination was used in the computation.

The index error of the rods is practically zero. Measures in June and November, 1895, show the first 0·1 m. to be correct within ± 0·1 mm.

* Cfr. Appendix No. 2, Report for 1893, part 2. Heights from geodetic leveling between St. Louis and Jefferson City, Mo., 1882 and 1888; and Appendix No. 5, Report for 1896. Resulting heights from spirit leveling between Jefferson City, Mo., and Holliday, Kans., 1891.

† For special reference respecting this instrument see Appendix No. 5, Report for 1896, p. 265; also for latest constants, Appendix No. 3, Report for 1896, p. 248. The mean value for collar inequality, −1·″11, was used.

‡ For description of these rods see Appendix No. 8, Report for 1895, with two plates of illustration.

The coefficient of expansion was but 0·000 004 per degree centigrade.

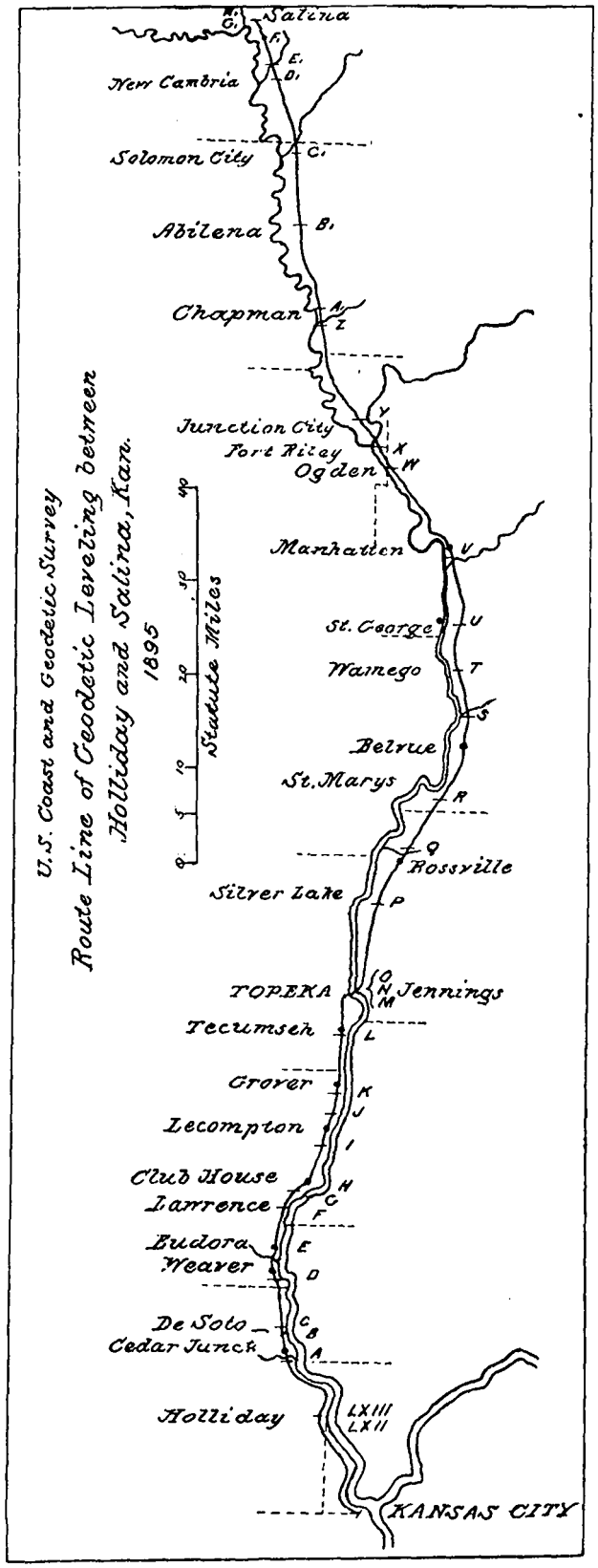

Method of observing.—The method of running two *independent* lines, one forward the other backward, which has been followed since leaving Etlah, Mo., was abandoned for the old method of running two *simultaneous* parallel lines, one with rod P, the other with rod Q. The average distance between the instrument and the rod was about 85 metres.

Computations.—The field computation is by the observer, assisted by members of his party. A revision was made at the office, by Assistant F. A. Young, of the abstract of results as prepared by Mr. Winston; and lastly, Assistant J. B. Baylor made a final revision.

Results.—The resulting heights of the bench marks above the St. Louis standard level K_3 are contained in the tabular exhibit of the operation. The temporary marks along the line are about 1·1 kilometres apart; the permanent bench marks number 34.

Squaring the numbers in column "P—Q" we find the mean error m' of a single leveling of 1 kilometre.

$$m' = \sqrt{\frac{[dd]}{2[s]}} = \sqrt{\frac{1757}{552}} = \pm 1{\cdot}78 \text{ mm.}$$

Also the probable error r'' of a double measure of 1 kilometre.

$$r'' = 0{\cdot}675\sqrt{\frac{[dd]}{4[s]}} = \pm 0{\cdot}85 \text{ mm.,}$$

and the probable error r of the whole line between bench marks LXIII and H_1.

$$r = 0{\cdot}675\sqrt{\frac{[dd]}{4}} = \pm 14{\cdot}2 \text{ mm.}$$

The above values suppose the two measures, or the P and Q lines, to be independent of one another. This not being the case with simultaneous lines, where the conditions of the instrument and of the atmosphere are the same for both lines, we increase the value of r by its fourth part and get the improved value $\pm$ 17·75 mm.

The probable error of the height assigned to Holliday, distant from St. Louis, Mo., 481·6 kilometres, or 299·3 statute miles, was $\pm$ 28·9 mm.; hence we have for the probable error of the height assigned to Salina, mark H_1 the value $\sqrt{(28{\cdot}9)^2 + (17{\cdot}75)^2} = \pm$ 33·9 mm., as developed between St. Louis and Salina. The total distance between these stations along the line of levels is 757·7 kilometres, or 470·8 statute miles.

Results of geodetic spirit leveling from Holliday to Salina, Kans.

Bench mark. From	To.	Distance between successive marks.	Distance from initial mark K_3 at St. Louis, Mo.	Difference of height between marks. Line rod P.	Line rod Q.	Mean of rods.	Discrepancy. Partial P—Q.	Total accumulated.	Height above bench mark K_3 at St. Louis, Mo.
		km.	*km.*	*m.*	*m.*	*m.*	*mm.*	*mm.*	*m.*
	LXIII		481·648						106·6648
LXIII	1	·977	482·625	+0·1110	+0·1086	+0·1098	+2·4	+2·4	106·7746
1	2	·954	483·579	+0·6527	+0·6526	+0·6526	+0·1	+2·5	107·4272
2	3	1·034	484·613	+1·0803	+1·0853	+1·0828	−5·0	−2·5	108·5100
3	4	1·105	485·718	−0·0922	−0·0958	−0·0940	+3·6	+1·1	108·4160
4	5	1·170	486·888	+0·5911	+0·5873	+0·5892	+3·8	+4·9	109·0052
5	R. R. Sta. (1)	·333	487·221	+1·087		+1·087			110·092
5	6	1·136	488·024	+0·2316	+0·2322	+0·2319	−0·6	+4·3	109·2371
6	7	1·134	489·158	+2·1462	+2·1477	+2·1470	−1·5	+2·8	111·3841
7	8	1·068	490·226	+0·0030	+0·0028	+0·0029	+0·2	+3·0	111·3870
8	9	·953	491·179	+0·9878	+0·9897	+0·9887	−1·9	+1·1	112·3757
9	10	1·010	492·189	+0·3722	+0·3753	+0·3738	−3·1	−2·0	112·7495
10	11	1·062	493·251	+0·2677	+0·2705	+0·2691	−2·8	−4·8	113·0186
11	12	1·072	494·323	−0·3015	−0·3045	−0·3030	+3·0	−1·8	112·7156
12	13	·980	495·303	*−0·9900	*−0·9950	−0·9925	+5·0	+3·2	111·7231
13	14	·508	495·811	−0·1154	−0·1136	−0·1145	−1·8	+1·4	111·6086
14	A	·093	495·904	+0·4858	+0·4854	+0·4856	+0·4	+1·8	112·0942
14	15	1·178	496·989	+0·2109	+0·2095	+0·2102	+1·4	+2·8	111·8188
15	16	1·149	498·138	+1·4021	+1·4001	+1·4011	+2·0	+4·8	113·2199
16	B	·552	498·690	+1·3658	+1·3635	+1·3646	+2·3	+7·1	114·5845
B	C	·403	499·093	+2·4401	+2·4418	+2·4410	−1·7	+5·4	117·0255
C	R. R. Sta. (2)	·049	499·142	−0·952		−0·952			116·074
C	17	·949	500·042	−1·6903	−1·6872	−1·6888	−3·1	+2·3	115·3367
17	18	1·272	501·314	+0·3146	+0·3141	+0·3143	+0·5	+2·8	115·6510
18	19	1·162	502·476	−1·1648	−1·1624	−1·1636	−2·4	+0·4	114·4874
19	20	1·035	503·511	+1·1087	+1·1051	+1·1069	+3·6	+4·0	115·5943
20	21	1·000	504·511	+1·5459	+1·5448	+1·5454	+1·1	+5·1	117·1397
21	22	1·090	505·601	+0·4179	+0·4148	+0·4164	+3·1	+8·2	117·5561
22	23	1·250	506·851	−0·7428	−0·7438	−0·7433	+1·0	+9·2	116·8128
23	D	·466	507·317	+0·6953	+0·6959	+0·6956	−0·6	+8·6	117·5084
D	24	1·068	508·385	−0·4957	−0·4943	−0·4950	−1·4	+7·2	117·0134
24	25	1·106	509·491	+1·5358	+1·5296	+1·5327	+6·2	+13·4	118·5461
25	26	·998	510·489	+4·1546	+4·1507	+4·1526	+3·9	+17·3	122·6987
26	27	1·055	511·544	−0·5415	−0·5478	−0·5446	+6·3	+23·6	122·1541
27	28	1·054	512·598	*−1·7955	*−1·8009	−1·7982	+5·4	+29·0	120·3559
28	E	·294	512·892	*+0·5908	*+0·5914	+0·5911	−0·6	+28·4	120·9470
E	29	1·012	513·904	−1·0868	−1·0907	−1·0888	+3·9	+32·3	119·8582
29	30	1·046	514·950	−0·2093	−0·2066	−0·2079	−2·7	+29·6	119·6503
30	31	1·162	516·112	+1·1602	+1·1589	+1·1596	+1·3	+30·9	120·8099
31	32	1·051	517·163	+0·7992	+0·7980	+0·7986	+1·2	+32·1	121·6085
32	33	1·399	518·562	−0·3357	−0·3389	−0·3373	+3·2	+35·3	121·2712
33	34	1·111	519·673	+2·3476	+2·3471	+2·3473	+0·5	+35·8	123·6185
34	35	·962	520·635	+0·0697	+0·0713	+0·0705	−1·6	+34·2	123·6890
35	36	·918	521·553	+0·4523	+0·4504	+0·4514	+1·9	+36·1	124·1404
36	37	1·048	522·601	+0·1959	+0·1973	+0·1966	−1·4	+34·7	124·3370
37	F	1·180	523·781	+1·2904	+1·2889	+1·2896	+1·5	+36·2	125·6266
F	R. R. Sta. (3)	·170	523·951	−0·685		−0·685			124·942
F	G	·766	524·547	−2·7167	−2·7168	−2·7168	+0·1	+36·3	122·9098
G	38	·868	525·415	*+0·9234	*+0·9299	+0·9267	−6·5	+29·8	123·8365
38	39	·909	526·324	−0·0676	−0·0675	−0·0675	−0·1	+29·7	123·7690
39	40	1·036	527·360	+0·5873	+0·5828	+0·5850	+4·5	+34·2	124·3540
40	41	1·090	528·450	−0·5565	−0·5540	−0.5553	−2·5	+31·7	123·7987
41	42	1·116	529·566	+1·8163	+1·8136	+1·8150	+2·7	+34·4	125·6137
42	H	1·194	530·760	+0·9369	+0·9403	+0·9386	−3·4	+31·0	126·5523
H	43	·970	531·730	−0·6953	−0·6961	−0·6957	+0·8	+31·8	125·8566
43	44	1·272	533·002	+1·2643	+1·2650	+1·2646	−0·7	+31·1	127·1212
44	45	1·240	534·242	+0·0037	+0·0082	+0·0060	−4·5	+26·6	127·1272
45	46	1·120	535·362	+1·2011	+1·2021	+1·2016	−1·0	+25·6	128·3288
46	47	1·160	536·522	+1·7582	+1·7532	+1·7557	+5·0	+30·6	130·0845
47	48	1·088	537·610	−0·6624	−0·6634	−0·6629	+1·0	+31·6	129·4216

*Mean of two measures.

Results of geodetic spirit leveling from Holliday to Salina, Kans.—Continued.

Bench mark. From	To.	Distance between successive marks.	Distance from initial mark K_3 at St. Louis, Mo.	Difference of height between marks. Line rod P.	Line rod Q.	Mean of rods.	Discrepancy. Partial P—Q.	Total accumulated.	Height above bench mark K_3 at St. Louis, Mo.
		km.	*km.*	*m.*	*m.*	*m.*	*mm.*	*mm.*	*m.*
48	49	·976	538·586	+ 0·6970	+ 0·6959	+ 0·6964	+1·1	+32·7	130·1180
49	I	·388	538·974	+ 0·6985	+ 0·6963	+ 0·6974	+2·2	+34·9	130·8154
I	50	1·294	540·268	− 0·3963	− 0·4028	− 0·3996	+6·5	+41·4	130·4158
50	51	1·051	541·319	+ 1·9006	+ 1·9032	+ 1·9019	−2·6	+38·8	132·3177
51	R. R. Sta. (4)	·153	541·472	+ 0·326		+ 0·326			132·644
51	52	·988	542·307	− 1·9850	− 1·9837	− 1·9843	−1·3	+37·5	130·3334
52	53	·709	543·016	+ 1·1145	+ 1·1129	+ 1·1137	+1·6	+39·1	131·4471
53	J	·111	543·127	+ 0·3024	+ 0·3027	+ 0·3026	−0·3	+38·8	131·7497
53	54	1·107	544·123	+ 1·1654	+ 1·1679	+ 1·1666	−2·5	+36·6	132·6137
54	55	·983	545·106	− 0·5804	− 0·5871	− 0·5838	+6·7	+43·3	132·0299
55	56	·984	546·090	+ 0·8628	+ 0·8635	+ 0·8632	−0·7	+42·6	132·8931
56	57	1·056	547·146	+ 0·6364	+ 0·6321	+ 0·6342	+4·3	+46·9	133·5273
57	58	1·089	548·235	+ 0·4562	+ 0·4581	+ 0·4572	−1·9	+45·0	133·9845
58	59	1·070	549·305	− 0·0152	− 0·0154	− 0·0153	+0·2	+45·2	133·9692
59	60	·989	550·294	+ 3·1912	+ 3·1863	+ 3·1887	+4·9	+50·1	137·1579
60	K	1·026	551·320	− 1·9712	− 1·9714	− 1·9713	+0·2	+50·3	135·1866
K	61	1·090	552·410	− 1·3026	− 1·3064	− 1·3045	+3·8	+54·1	133·8821
61	62	1·034	553·444	+ 2·2564	+ 2·2547	+ 2·2556	+1·7	+55·8	136·1377
62	R. R. Sta. (5)	·450	553·894	+ 0·923		+ 0·923			137·061
62	63	1·085	554·529	+ 1·7507	+ 1·7503	+ 1·7505	+0·4	+56·2	137·8882
63	64	1·252	555·781	− 0·1379	− 0·1411	− 0·1395	+3·2	+59·4	137·7487
64	65	1·235	557·016	− 0·7896	− 0·7919	− 0·7907	+2·3	+61·7	136·9580
65	66	1·186	558·202	+ 1·7117	+ 1·7113	+ 1·7115	+0·4	+62·1	138·6695
66	L	·414	558·616	− 0·9315	− 0·9320	− 0·9318	+0·5	+62·6	137·7377
L	67	1·171	559·787	− 0·5679	− 0·5695	− 0·5687	+1·6	+64·2	137·1690
67	68	1·120	560·907	+ 1·8751	+ 1·8794	+ 1·8772	−4·3	+59·9	139·0462
68	69	1·001	561·908	+ 2·4554	+ 2·4496	+ 2·4525	+5·8	+65·7	141·4987
69	70	1·022	562·930	+ 0·4816	+ 0·4822	+ 0·4819	−0·6	+65·1	141·9806
70	71	1·156	564·086	+ 1·6209	+ 1·6175	+ 1·6192	+3·4	+68·5	143·5998
71	72	1·378	565·464	+ 0·2908	+ 0·2884	+ 0·2896	+2·4	+70·9	143·8894
72	M	·081	565·545	+ 0·6789	+ 0·6793	+ 0·6791	−0·4	+70·5	144·5685
M	73	1·035	566·580	+ 0·1077	+ 0·1089	+ 0·1083	−1·2	+69·3	144·6768
73	Jennings	·822	567·402	+12·1920	+12·1934	+12·1927	−1·4	+67·9	156·8695
Jennings	O	·070	567·472	+ 1·3422	+ 1·3425	+ 1·3424	−0·3	+67·6	158·2119
M	N	·608	566·153	− 1·6033	− 1·6015	− 1·6024	−1·8	+68·7	142·9661
N	R. R. Sta. (6)	·905	567·058	− 0·610		− 0·610			142·356
N	74	1·198	567·351	− 0·8719	− 0·8762	− 0·8740	+4·3	+73·0	142·0921
74	R. R. X (7)	·335	567·686	+ 0·123		+ 0·123			142·215
74	75	1·194	568·545	+ 0·3628	+ 0·3620	+ 0·3624	+0·8	+73·8	142·4545
75	76	1·203	569·748	− 0·0490	− 0·0502	− 0·0496	+1·2	+75·0	142·4049
76	77	1·210	570·958	+ 1·3276	+ 1·3303	+ 1·3290	−2·7	+72·3	143·7339
77	78	1·254	572·212	+ 1·1993	+ 1·1998	+ 1·1995	−0·5	+71·8	144·9324
78	79	1·142	573·354	+ 2·8214	+ 2·8228	+ 2·8221	−1·4	+70·4	147·7555
79	80	1·062	574·416	+ 0·0504	+ 0·0505	+ 0·0505	−0·1	+70·3	147·8060
80	R. R. Sta. (8)	·127	574·543	− 0·114		− 0·114			147·692
80	81	1·124	575·540	− 0·9789	− 0·9753	− 0·9771	−3·6	+66·7	146·8289
81	82	1·195	576·735	+ 0·3236	+ 0·3237	+ 0·3236	−0·1	+66·6	147·1525
82	83	1·165	577·900	+ 1·1908	+ 1·1874	+ 1·1891	+3·4	+70·0	148·3416
83	84	1·180	579·080	+ 0·3983	+ 0·3959	+ 0·3971	+2·4	+72·4	148·7387
84	85	1·201	580·281	+ 0·3835	+ 0·3850	+ 0·3843	−1·5	+70·9	149·1230
85	86	1·230	581·511	+ 0·6523	+ 0·6514	+ 0·6518	+0·9	+71·8	149·7748
86	87	1·184	582·695	+ 0·4079	+ 0·4121	+ 0·4100	−4·2	+67·6	150·1848
87	88	1·346	584·041	+ 1·8824	+ 1·8793	+ 1·8809	+3·1	+70·7	152·0657
88	P	·409	584.450	+ 0·6285	+ 0·6284	+ 0·6284	+0·1	+70·8	152·6941
P	R. R. Sta. (9)	·080	584·530	− 0·217		− 0·217			152·477

Results of geodetic spirit leveling from Holliday to Salina, Kans.—Continued.

Bench mark. From	To.	Distance between successive marks.	Distance from initial mark K_3 at St. Louis, Mo.	Difference of height between marks. Line rod P.	Line rod Q.	Mean of rods.	Discrepancy. Partial P—Q.	Total accumulated.	Height above bench mark K_3 at St. Louis, Mo.
		km.	*km.*	*m.*	*m.*	*m.*	*mm.*	*mm.*	*m.*
P	89	1·028	585·478	−0·5228	−0·5216	−0·5222	−1·2	+69·6	152·1719
89	90	1·200	586·678	+1·3243	+1·3234	+1·3239	+0·9	+70·5	153·4958
90	91	1·196	587·874	−0·9777	−0·9765	−0·9771	−1·2	+69·3	152·5187
91 R. R. Sta. (10)		·792	588·666	+0·856		+0·856			153·375
91	92	1·198	589·072	+0·8270	+0·8271	+0·8270	−0·1	+69·2	153·3457
92	93	1·198	590·270	−0·9211	−0·9265	−0·9238	+5·4	+74·6	152·4219
93	94	1·173	591·443	+3·0393	+3·0422	+3·0408	−2·9	+71·7	155·4627
94	95	1·182	592·625	+1·1271	+1·1303	+1·1287	−3·2	+68·5	156·5914
95 R. R. Sta. (11)		·389	593·014	+0·509		+0·509			157·100
95	Q	·806	593·431	+0·6066	+0·6059	+0·6062	+0·7	+69·2	157·1976
Q	96	1·192	594·623	+0·5364	+0·5318	+0·5341	+4·6	+73·8	157·7317
96	97	1·186	595·809	−0·0435	−0·0423	−0·0429	−1·2	+72·6	157·6888
97	98	1·115	596·924	+1·3772	+1·3760	+1·3766	+1·2	+73·8	159·0654
98	99	1·282	598·206	+0·3999	+0·4047	+0·4023	−4·8	+69·0	159·4677
99	100	1·134	599·340	+1·0637	+1·0653	+1·0645	−1·6	+67·4	160·5322
100	101	1·162	600·502	+1·6333	+1·6303	+1·6318	+3·0	+70·4	162·1640
101	102	1·088	601·590	−3·2441	−3·2468	−3·2454	+2·7	+73·1	158·9186
102	103	1·088	602·678	+4·0722	+4·0750	+4·0736	−2·8	+70·3	162·9922
103	104	1·054	603·732	+1·3485	+1·3510	+1·3498	−2·5	+67·8	164·3420
104	R	·853	604·585	+3·8554	+3·8582	+3·8568	−2·8	+65·0	168·1988
104	105	1·197	604·929	+0·4145	+0·4157	+0·4151	−1·2	+66·6	164·7571
105 R. R. Sta. (12)		·313	605·242	+1·208		+1·208			165·965
105	106	1·085	606·014	+0·0701	+0·0681	+0·0691	+2·0	+68·6	164·8262
106	107	1·073	607·087	−0·3798	−0·3822	−0·3810	+2·4	+71·0	164·4452
107	108	1·126	608·213	+0·5916	+0·5899	+0·5907	+1·7	+72·7	165·0359
108	109	1·176	609·389	+4·2182	+4·2206	+4·2194	−2·4	+70·3	169·2553
109	110	1·196	610·585	+0·3167	+0·3160	+0·3164	+0·7	+71·0	169·5717
110	111	1·387	611·972	−4·1858	−4·1845	−4·1852	−1·3	+69·7	165·3865
111	112	1·214	613·186	−0·3106	−0·3106	−0·3106	0·0	+69·7	165·0759
112	113	1·289	614·475	+0·1848	+0·1836	+0·1842	+1·2	+70·9	165·2601
113 R. R. Sta. (13)		·548	615·023	+1·306		+1·306			166·566
113	114	1·189	615·664	+0·5379	+0·5390	+0·5385	−1·1	+69·8	165·7986
114	115	1·090	616·754	+1·9012	+1·9034	+1·9023	−2·2	+67·6	167·7009
115	S	1·239	617·993	−0·7732	−0·7713	−0·7722	−1·9	+65·7	166·9287
S	116	1·192	619·185	+1·1085	+1·1107	+1·1096	−2·2	+63·5	168·0383
116	117	1·080	620·265	−0·3860	−0·3831	−0·3845	−2·9	+60·6	167·6538
117	118	1·082	621·347	+3·3377	+3·3355	+3·3366	+2·2	+62·8	170·9904
118	119	1·104	622·451	+1·2090	+1·2124	+1·2107	−3·4	+59·4	172·2011
119	120	1·195	623·646	+0·0355	+0·0358	+0·0356	−0·3	+59·1	172·2367
120	121	1·194	624·840	+1·3934	+1·3917	+1·3926	+1·7	+60·8	173·6293
121	T	1·213	626·053	+2·3628	+2·3656	+2·3642	−2·8	+58·0	175·9935
T R. R. Sta. (14)		·100	626·153	−0·414		−0·414			175·579
T	122	1·056	627·109	−2·8379	−2·8367	−2·8373	−1·2	+56·8	173·1562
122	123	1·163	628·272	−1·3769	−1·4758	−1·3764	−1·1	+55·7	171·7798
123	124	1·294	629·566	+0·4293	+0·4314	+0·4304	−2·1	+53·6	172·2102
124	125	1·234	630·800	+1·2760	+1·2781	+1·2770	−2·1	+51·5	173·4872
125	126	1·125	631·925	+1·9674	+1·9680	+1·9677	−0·6	+50·9	175·4549
126	127	1·196	633·121	−0·4695	−0·4684	−0·4689	−1·1	+49·8	174·9860
127	128	1·218	634·339	+0·4287	+0·4288	+0·4287	−0·1	+49·7	175·4147
128	129	1·198	635·537	−0·3138	−0·3134	−0·3136	−0·4	+49·3	175·1011
129	130	1·049	636·586	+0·5770	+0·5758	+0·5764	+1·2	+50·5	175·6775
130 R. R. Sta. (15)		·316	636·902	+1·083		+1·083			176·760
130	131	·464	637·050	+0·7255	+0·7250	+0·7253	+0·5	+51·0	176·4028
131	U	·242	637·292	+3·3750	+3·3748	+3·3749	+0·2	+51·2	179·7777
131	132	1·148	638·198	−1·4575	−1·4574	−1·4575	−0·1	+51·1	174·9453

Results of geodetic spirit leveling from Holliday to Salina, Kans.—Continued.

Bench mark. From	To.	Distance between successive marks.	Distance from initial mark K_3 at St. Louis, Mo.	Difference of height between marks. Line rod P.	Line rod Q.	Mean of rods.	Discrepancy. Partial P—Q.	Total accumulated.	Height above bench mark K_3 at St. Louis, Mo.
		km.	*km.*	*m.*	*m.*	*m.*	*mm.*	*mm.*	*m.*
132	133	1·144	639·342	+1·7595	+1·7562	+1·7579	+3·3	+54·4	176·7032
133	134	·998	640·340	+0·8079	+0·8084	+0·8081	−0·5	+53·9	177·5113
134	135	1·198	641·538	+0·6643	+0·6636	+0·6640	+0·7	+54·6	178·1753
135	136	1·376	642·914	−0·3968	−0·3914	−0·3941	−5·4	+49·2	177·7812
136	137	1·044	643·958	+3·4186	+3·4188	+3·4187	−0·2	+49·0	181·1999
137	138	·976	644·934	+2·1103	+2·1093	+2·1098	+1·0	+50·0	183·3097
138	139	1·030	645·964	−0·2861	−0·2870	−0·2866	+0·9	+50·9	183·0231
139	140	1·088	647·052	−1·9264	−1·9274	−1·9269	+1·0	+51·9	181·0962
140	141	1·156	648·208	−1·1498	−1·1514	−1·1506	+1·6	+53·5	179·9456
141	V	·752	648·960	+0·7813	+0·7825	+0·7819	−1·2	+52·3	180·7275
V	Gauge (16)			−5·958		−5·958			174·769
V	R. R. Sta. (17)	·282	649·242	+1·891		+1·891			182·618
VX	R. R. (18)	·615	649·575	+2·500		+2·500			183·227
V	142	1·002	649·962	+2·7825	+2·7798	+2·7812	+2·7	+55·0	183·5087
142	143	1·104	651·066	+1·3698	+1·3686	+1·3692	+1·2	+56·1	184·8779
143	144	1·191	652·257	+4·5585	+4·5583	+4·5584	+0·2	+56·3	189·4363
144	145	1·074	653·331	−5·3217	−5·3206	−5·3212	−1·1	+55·2	184·1151
145	146	1·139	654·470	−0·6911	−0·6904	−0·6907	−0·7	+54·5	183·4244
146	147	1·082	655·552	+4·7027	+4·7030	+4·7029	−0·3	+54·2	188·1273
147	148	1·187	656·739	−1·3603	−1·3579	−1·3591	−2·4	+51·8	186·7682
148	149	1·176	657·915	+1·2485	+1·2511	+1·2498	−2·6	+49·2	188·0180
149	150	1·161	659·076	+0·1871	+0·1819	+0·1845	+5·2	+54·4	188·2025
150	151	1·053	660·129	+0·6379	+0·6425	+0·6402	−4·6	+49·8	188·8427
151	152	·950	661·079	+0·8807	+0·8830	+0·8818	−2·3	+47·5	189·7245
152	153	1·034	662·113	+1·5360	+1·5318	+1·5339	+4·2	+51·7	191·2584
153	154	·979	663·092	+0·0946	+0·0978	+0·0962	−3·2	+48·5	191·3546
154	155	1·031	664·123	+0·7267	+0·7273	+0·7270	−0·6	+47·9	192·0816
155	156	1·178	665·301	+1·3695	+1·3689	+1·3692	+0·6	+48·5	193·4508
156	157	1·243	666·544	+0·5704	+0·5676	+0·5690	+2·8	+51·3	194·0198
157	W	·392	666·936	+2·5590	+2·5596	+2·5593	−0·6	+50·7	196·5791
157	R. R. Sta. (19)	·401	666·945	+0·267		+0·267			194·287
157	158	1·443	667·987	−0·6359	−0·6340	−0·6350	−1·9	+49·4	193·3848
158	159	1·366	669·353	+1·6255	+1·6275	+1·6265	−2·0	+47·4	195·0113
159	160	1·252	670·605	+2·9247	+2·9248	+2·9247	−0·1	+47·3	197·9360
160	161	1·160	671·765	+0·8452	+0·8419	+0·8436	+3·3	+50·6	198·7796
161	162	1·111	672·876	+3·2577	+3·2541	+3·2559	+3·6	+54·2	202·0355
162	163	1·140	674·016	−2·0180	−2·0167	−2·0173	−1·3	+52·9	200·0182
163	164	1·198	675·214	−2·0245	−2·0261	−2·0253	+1·6	+54·5	197·9929
164	X	·292	675·506	+2·1141	+2·1152	+2·1146	−1·1	+53·4	200·1075
X	R. R. Sta. (20)	·076	675·582	−1·634		−1·634			198·474
X	165	1·000	676·506	−1·8834	−1·8819	−1·8827	−1·5	+51·9	198·2248
165	166	·996	677·502	+1·4527	+1·4503	+1·4515	+2·4	+54·3	199·6763
166	167	1·083	678·585	−1·0430	−1·0435	−1·0432	+0·5	+54·8	198·6331
167	168	1·088	679·673	+1·3790	+1·3803	+1·3796	−1·3	+53·5	200·0127
168	169	1·072	680·745	+1·8154	+1·8137	+1·8146	+1·7	+55·2	201·8273
169	170	·822	681·567	*+0·6696	*+0·6722	+0·6709	−2·4	+52·8	202·4982
170	Y	·029	681·596	+0·7598	+0·7596	+0·7597	+0·2	+53·0	203·2579
170	R. R. Sta. (21)	·111	681·678	+0·121		+0·121			202·619
*170	171	·966	682·533	−0·6837	−0·6815	−0·6826	−2·2	+50·6	201·8156
171	172	1·074	683·607	+0·7623	+0·7603	+0·7613	+2·0	+52·6	202·5769
172	173	1·426	685·033	+0·6924	+0·6945	+0·6934	−2·1	+50·5	203·2703
173	174	1·178	686·211	−0·3527	−0·3520	−0·3524	−0·7	+49·8	202·9179
174	175	1·090	687·301	+5·6295	+5·6309	+5·6302	−1·4	+48·4	208·5481
175	176	1·116	688·417	−2·5229	−2·5241	−2·5235	+1·2	+49·6	206·0246
176	177	1·252	689·669	−0·8267	−0·8316	−0·8292	+4·9	+54·5	205·1954
177	178	1·168	690·837	+0·9078	+0·9076	+0·9077	+0·2	+54·7	206·1031
178	179	1·062	691·899	+0·0354	+0·0322	+0·0338	+3·2	+57·9	206·1369
179	180	1·119	693·018	+2·8375	+2·8390	+2·8383	−1·5	+56·4	208·9752
180	181	·998	694·016	+0·3395	+0·3368	+0·3381	+2·7	+59·1	209·3133
181	182	1·162	695·178	−0·4711	−0·4698	−0·4705	−1·3	+57·8	208·8428
182	183	1·196	696·374	+1·2445	+1·2430	+1·2438	+1·5	+59·3	210·0866

*Mean of two measures.

Results of geodetic spirit leveling from Holliday to Salina, Kans.—Continued.

Bench mark. From	To.	Distance between successive marks.	Distance from initial mark K_3 at St. Louis, Mo.	Difference of height between marks. Line rod P.	Line rod Q.	Mean of rods.	Discrepancy. Partial P—Q.	Total accumulated.	Height above bench mark K_3 at St. Louis, Mo.
		km.	*km.*	*m.*	*m.*	*m.*	*mm.*	*mm.*	*m.*
183	184	1·162	697·536	+0·5493	+0·5446	+0·5469	+4·7	+64·0	210·6335
184	185	1·164	698·700	+0·2909	+0·2948	+0·2929	−3·9	+60·1	210·9264
185	186	1·162	699·862	+0·5468	+0·5512	+0·5490	−4·4	+55·7	211·4754
186	Z	1·161	701·023	−0·0583	−0·0601	−0·0592	+1·8	+57·5	211·4162
Z	187	1·056	702·079	+1·6386	+1·6377	+1·6381	+0·9	+58·4	213·0543
187 R.R.Sta.(22)		·213	702·292	+0·335		+0·335			213·389
187	A_1	·711	702·790	+1·8780	+1·8778	+1·8779	+0·2	+58·6	214·9322
A_1	188	1·011	703·801	+3·9614	+3·9625	+3·9620	−1·1	+57·5	218·8942
188	189	1·122	704·923	−2·8893	−2·8876	−2·8885	−1·7	+55·8	216·0057
189	190	1·089	706·012	−1·3154	−1·3141	−1·3148	−1·3	+54·5	214·6909
190	191	1·056	707·068	+0·0841	+0·0852	+0·0846	−1·1	+53·4	214·7755
191	192	1·043	708·111	+0·5049	+0·5100	+0·5075	−5·1	+48·3	215·2830
192	193	1·372	709·483	+0·9478	+0·9530	+0·9504	−5·2	+43·1	216·2334
193	194	1·146	710·629	*+1·0354	*+1·0373	+1·0363	−1·9	+41·2	217·2697
194	195	·981	711·610	+1·8390	+1·8403	+1·8396	−1·3	+39·9	219·1093
195 R.R.Sta.(23)		·706	712·316	+1·072		+1·072			220·181
195	196	1·159	712·769	+0·6624	+0·6619	+0·6622	+0·5	+40·4	219·7715
196	197	1·110	713·879	+0·6328	+0·6321	+0·6324	+0·7	+41·1	220·4039
197	198	1·072	714·951	+0·1375	+0·1386	+0·1381	−1·1	+40·0	220·5420
198	199	1·196	716·147	+0·1950	+0·1972	+0·1961	−2·2	+37.8	220·7381
199	200	1·208	717·355	+0·9812	+0·9859	+0·9835	−4·7	+33·1	221·7216
200	201	1·131	718·486	+1·1507	+1·1461	+1·1484	+4·6	+37·7	222·8700
201	202	1·032	719·518	+0·8204	+0·8200	+0·8202	+0·4	+38·1	223·6902
202	203	·872	720·390	+1·9830	+1·9846	+1·9838	−1·6	+36·5	225·6740
203	B_1	·135	720·525	+1·1009	+1·1005	+1·1007	−0·4	+36·1	226·7747
203 R.R.Sta.(24)		·144	720·534	+0.178		+0·178			225·852
203	204	1·226	721·616	−0·1019	−0·1020	−0·1019	+0·1	+36·6	225·5721
204 X. R. R. (25)		·343	721·959	−0·016		−0·016			225·556
204	205	1·104	722·720	−1·0223	−1·0259	−1·0241	+3·6	+40·2	224·5480
205	206	·974	723·694	+0·7181	+0·7184	+0·7183	−0·3	+39·9	225·2663
206	207	1·010	724·704	+1·0689	+1·0684	+1·0686	+0·5	+40·4	226·3349
207	208	1·149	725·853	−0·4353	−0·4377	−0·4365	+2·4	+42·8	225·8984
208	209	1·190	727·043	+2·2583	+2·2587	+2·2585	−0·4	+42·4	228·1569
209	210	1·154	728·197	−0·0848	−0·0898	−0·0873	+5·0	+47·4	228·0696
210	211	1·175	729·372	+0·1864	+0·1877	+0·1871	−1·3	+46·1	228·2567
211	212	1·056	730·428	−0·2496	−0·2526	−0·2511	+3·0	+49·1	228·0056
212	213	1·101	731·529	+1·2926	+1·2945	+1·2935	−1·9	+47·2	229·2991
213	214	1·056	732·585	+1·2344	+1·2314	+1·2329	+3·0	+50·2	230·5320
214	215	1·020	733·605	−0·2004	−0·1977	−0·1991	−2·7	+47·5	230·3329
215	216	·784	734·389	+0·7828	+0·7860	+0·7844	−3·2	+44·3	231·1173
216	C_1	·091	734·480	+1·2863	+1·2865	+1·2864	−0·2	+44·1	232·4037
216	217	1·095	735·484	−0·8788	−0·8814	−0·8801	+2·6	+46·9	230·2372
217	218	1·077	736·561	+0·7423	+0·7411	+0·7417	+1·2	+48·1	230·9789
218	219	1·196	737·757	−0·2274	−0·2304	−0·2289	+3·0	+51·1	230·7500
219	220	1·084	738·841	+1·5178	+1·5177	+1·5178	+0·1	+51·2	232·2678
220	221	1·106	739·947	+0·1410	+0·1459	+0·1434	−4·9	+46·3	232·4112
221	222	1·258	741·205	+0·3857	+0·3914	+0·3886	−5·7	+40·6	232·7998
222	223	1·058	742·263	+0·3617	+0·3654	+0·3635	−3·7	+36·9	233·1633
223	224	1·141	743·404	+0·7040	+0·7042	+0·7041	−0·2	+36·7	233·8674
224	225	1·165	744·569	+1·2282	+1·2323	+1·2303	−4·1	+32·6	235·0977
225	226	1·116	745·685	+1·5626	+1·5610	+1·5618	+1·6	+34·2	236·6595
226	227	1·092	746·777	+1·1452	+1·1447	+1·1449	+0·5	+34·7	237·8044
227	D_1	·442	747·219	+1·9677	+1·9668	+1·9673	+0·9	+35·6	239·7717
D_1 R.R.Sta.(26)		·071	747·290	−0·294		− 0·294			239·478

*Mean of two measures.

Results of geodetic spirit leveling from Holliday to Salina, Kans.—Continued.

Bench mark.		Distance between successive marks.	Distance from initial mark K_3 at St. Louis, Mo.	Difference of height between marks.			Discrepancy.		Height above bench mark K_3 at St. Louis, Mo.
From	To.			Line rod P.	Line rod Q.	Mean of rods.	Partial P—Q.	Total accumulated.	
		km.	*km.*	*m.*	*m.*	*m.*	*mm.*	*mm.*	*m.*
D_1	E_1	1·276	748·495	−0·3384	−0·3397	−0·3390	+1·3	+36·9	239·4327
E_1	228	1·216	749·711	+1·4282	+1·4300	+1·4291	−1·8	+35·1	240·8618
228	229	1·204	750·915	+0·9631	+0·9631	+0·9631	0·0	+35·1	241·8249
229	230	1·090	752·005	+2·0632	+2·0658	+2·0645	−2·6	+32·5	243·8894
230	231	1·189	753·194	+0·1711	+0·1718	+0·1714	−0·7	+31·8	244·0608
231	232	1·202	754·396	+1·3123	+1·3164	+1·3144	−4·1	+27·7	245·3752
232	233	1·160	755·556	+0·0963	+0·0999	+0·0981	−3·6	+24·1	245·4733
233	234	1·050	756·606	+1·5311	+1·5289	+1·5300	+2·2	+26·3	247·0033
234	F_1	·350	756·956	+0·3015	+0·3013	+0·3014	+0·2	+26·5	247·3047
F_1	G_1	·366	757·322	+0·3898	+0·3894	+0·3896	+0·4	+26·9	247·6943
G_1	H_1	·180	757·502	+0·0454	+0·0459	+0·0456	−0·5	+26·4	247·7399

Recapitulation of resulting heights above mark K_3 (at St. Louis, Mo.) of bench marks between Holliday and Salina, Kans., with correction for change of rods with temperature.

Bench mark.	Distance from initial mark.	Heights above mark K_3.	Corrections for temperature.	Corrected heights above mark K_3.
	km.	*m.*	*m.*	*m.*
A	495·904	112·0942	−0·0003	112·0939
B	498·690	114·5845	— 3	114·5842
C	499·093	117·0255	— 3	117·0252
D	507·317	117·5084	— 2	117·5082
E	512·892	120·9470	— 3	120·9467
F	523·781	125·6266	+ 1	125·6267
G	524·547	122·9098	0	122·9098
H	530·760	126·5523	+ 2	126·5525
I	538·974	130·8154	+ 3	130·8157
J	543·127	131·7497	+ 3	131·7500
K	551·320	135·1866	+ 3	135·1869
L	558·616	137·7377	+ 3	137·7380
M	565·545	144·5685	+ 6	144·5691
N	566·153	142·9661	+ 4	142·9665
Jennings	567·402	156·8695	+ 6	156·8701
O	567·472	158·2119	+ 6	158·2125
P	584·450	152·6941	+ 4	152·6945
Q	593·431	157·1976	+ 8	157·1984
R	604·585	168·1988	+ 12	168·2000
S	617·993	166·9287	+ 13	166·9300
T	626·053	175·9935	+ 16	175·9951
U	637·292	179·7777	+ 20	179·7797
V	648·960	180·7275	+ 18	180·7293
W	666·936	196·5791	+ 25	196·5816
X	675·506	200·1075	+ 28	200·1103
Y	681·596	203·2579	+ 28	203·2607
Z	701·023	211·4162	+ 32	211·4194
A_1	702·790	214·9322	+ 32	214·9354
B_1	720·525	226·7747	+ 35	226·7782
C_1	734·480	232·4037	+ 34	232·4071
D_1	747·219	239·7717	+ 30	239·7747
E_1	748·495	239·4327	+ 30	239·4357
F_1	756·956	247·3047	+ 27	247·3074
G_1	757·322	247·6943	+ 27	247·6970
H_1	757·502	247·7399	+ 27	247·7426

DESCRIPTION OF BENCH MARKS ON THE LINE OF LEVELS BETWEEN HOLLIDAY AND SALINA, KANS.; ESTABLISHED BY I. WINSTON, ASSISTANT COAST AND GEODETIC SURVEY, IN 1895.

B. M. LXIII.—Mark on stone abutment to iron railroad bridge at Holliday, Kans. Established by I. Winston in 1891. See his Description of Bench Marks, Kansas, 1891. When visited in 1895 it was found in good order.

B. M. A.—A square hole was cut in the stone abutment to the iron railroad bridge (No. 19) over Cedar Creek, three-fourths of a mile east of Cedar Junction, Johnson County, Kans., for this bench mark. The bench mark is on the west abutment, north of the track, about the center of the stone forming the top, at the northeast corner. The bottom of the square hole is the bench mark. The following letters were roughly cut: U. S. B. M.

B. M. B.—A square hole was cut in the top of the stone abutment to the iron railroad bridge over Kill (?) Creek, one-fourth of a mile east of Desoto, Johnson County, Kans., for this bench mark. The bench mark is on the east abutment, north of the track and near the center of the stone forming the top of northwest corner. The bottom of the square hole is the bench mark. The following letters were roughly cut: U. S. B. M.

B. M. C.—A copper bolt was leaded in the brick flour mill at Desoto, Johnson County, Kans., for this bench mark. The mill is a three-story brick building owned by J. M. Hadley. The bolt is in the west (front) wall, in the second course above the stone foundation, and in the second brick from northwest corner. Two lines were cut in the end of the bolt, forming a cross at its centre, and the intersection of these lines is the bench mark.

B. M. D.—A square hole was cut in the top of the stone abutment to the iron railroad bridge (No. 29) over a creek, one-half mile east of Weaver, Douglas County, Kans., for this bench mark. The bench mark is on the east abutment, in the middle (near west end) of the stone forming the top of the northwest corner of the abutment. The bottom of the square hole is the bench mark. The following letters were roughly cut: U. S. B. M.

B. M. E.—A square hole was cut in the top of the stone abutment to the iron railroad bridge over Wakarusa Creek, one-half mile west of Eudora, Douglas County, Kans., for this bench mark. The bench mark is on the west abutment, north of the track and near the middle and east end of the stone forming the top of the northeast corner. The bottom of the square hole is the bench mark. The following letters were roughly cut: U. S. B. M.

B. M. F.—A square hole was cut in the stone doorsill to the door in the east end of the Atchison, Topeka and Santa Fé Railroad depot at Lawrence, Douglas County, Kans., for this bench mark. The bench mark is near the south end of the sill and near the front edge. The stone is very hard and the hole was not cut deep. The bottom of the square hole is the bench mark. The building is of brick with stone trimmings.

B. M. G.—A square hole was cut in the top of the stone retaining wall at the entrance of the mill race at Lawrence, Douglas County, Kans., for this bench mark. The bench mark is cut at the rounded portion of the wall on the shore side of the race at its entrance. The bottom of the square hole is the bench mark. The following letters were roughly cut: U. S. B. M.

B. M. H.—A square hole was cut in the top of the stone abutment to the iron railroad bridge over Mud Creek, one-half mile east of Club House, Douglas County, Kans., for this bench mark. The bench mark is on the east abutment, north of the track and near the middle and west end of the stone forming the top of the northwest corner. The bottom of the square hole is the bench mark. The following letters were roughly cut: U. S. B. M.

B. M. I.—A square hole was cut in the top of the stone abutment to the iron railroad bridge over a creek, one-half mile east of Lecompton, Douglas County, Kans., for this bench mark. The

bench mark is on the west abutment, north of the track and near the middle and east end of the stone forming the top of the northeast corner. The bottom of the square hole is the bench mark. The following letters were roughly cut: U. S. / B. M.

B. M. J.—A square hole was cut in the top of the stone abutment to the iron railroad bridge (No. 47) over Coon Creek, 1 mile west of Lecompton, Douglas County, Kans., for this bench mark. The bench mark is on the west abutment, south of the track and near the middle and east end of the stone forming the top of the southeast corner. The bottom of the square hole is the bench mark. The following letters were roughly cut: U. S. / B. M.

B. M. K.—A square hole was cut in the top of the stone abutment to the railroad bridge (No. 55), 1¼ miles east of Grover, Douglas County, Kans., for this bench mark. The bench mark is on the west abutment, south of the track and in the middle (near east end) of the stone forming the top of the southeast corner. The bottom of the square hole is the bench mark. The following letters were roughly cut: U. S. / B. M.

B. M. L.—A square hole was cut in the top of the abutment to the iron railroad bridge over a creek one-half mile east of Tecumseh, Shawnee County, Kans., for this bench mark. The bench mark is north of the track, on west abutment and near middle and east end of the stone forming the northeast corner of its top. The bottom of the square hole is the bench mark. The following letters were roughly cut: U. S. / B. M.

B. M. M.—A square hole was cut in the upper surface of a stone projecting from the wall of the paint shop of the Atchison, Topeka and Santa Fé Railway repair shops at Topeka, Kans., for this bench mark. The bench mark is on the south wall, near the southwest corner of the building, in a slight recess formed by two offsets in the wall running up like columns from the stone on which the bench mark is cut. One of these columns forms the southwest corner of the building. The bottom of the square hole is the bench mark. No letters were cut.

B. M. N.—A square hole was cut in the top of the stone supporting the south end of the iron railroad bridge (Atchison, Topeka and Santa Fé) over the Kansas River at Topeka, Kans., for this bench mark. The bench mark is east of the track on the south bank of the river and on the south side of the street which goes under the bridge. It is near the northeast corner of the stone. The bottom of the square is the bench mark. The following letters were roughly cut: U. S. / B. M.

B. M. Jennings.—A cross cut on the west end of the stone forming the third step above the pavement at the entrance to the Columbian Building at Topeka, Kans., was used for this bench mark. It was established by Mr. Jennings, the United States Weather Service observer, and his barometer is referred to it. The Columbian Building is on Sixth street, between Kansas avenue and Jackson street. The cross is close to the wall, and the surface of the stone at the south end of the cross is the bench mark.

B. M. O.—A smooth place is dressed on the face of the second stone (sandstone) above the pavement on the west side of the entrance to the Columbian Building, Sixth street, between Kansas avenue and Jackson street, Topeka, Kans., and a V-shaped line is nicely cut horizontally across this space. The bottom[1] of the cut forming this line at its middle point was used as this bench mark. It is lettered as follows: $\frac{945 \text{ B. M.}}{\text{above sea level}}$ feet[2] and was established by the owner of the building.

B. M. P.—A square hole was cut in the top of the stone window sill to the brick building, at Silver Lake, Shawnee County, Kans., used as the post-office, for this bench mark. The building (owned by P. H. Butler) is south of the track, nearly opposite the railroad station, on south side

---

[1] V / B. M.

[2] These figures are said to be based on Atchison, Topeka and Santa Fé Railroad levels.

of the main street and on the northwest corner of a block. The bench mark is about the middle of the window sill of the west window in the front (north) face of the building. The bottom of the square hole is the bench mark. The following letters were roughly cut: U. S. B. M.

B. M. Q.—A square hole was cut in the top of the stone abutment to the iron railroad bridge one-fourth mile west of Rossville, Shawnee County, Kans., for this bench mark. The bench mark is north of the track on east abutment and about the middle of exposed portion of the stone supporting the end of the bridge. The bottom of the square hole is the bench mark. The following letters were roughly cut: U. S. B. M.

B. M. R.—Two lines forming a cross (+) were cut on the stone coping of the foundation to the brick building used as an infirmary at St. Mary's College (Jesuit), St. Marys, Pottawatomie County, Kans., for this bench mark. The bench mark is on the west face of the building, on the third stone from southwest corner, and about under the center of the space between the second and third windows from southwest corner. The intersection of the two lines forming the cross is the bench mark. The following letters were roughly cut: U. S. B. M.

B. M. S.—A square hole was cut in the top of the stone abutment to the iron railroad bridge over Vermilion River, about 2 miles west of Belvue, Pottawatomie County, Kans., for this bench mark. The bench mark is north of the track on west abutment and about the center of the exposed portion of the stone supporting the end of the bridge. The bottom of the square hole is the bench mark. The following letters were roughly cut: U. S. B. M.

B. M. T.—A square hole was cut in the top of the stone window sill to the two-story stone building at the northwest corner of Lincoln avenue and Third street, Wamego, Pottawatomie County, Kans., for this bench mark. The building is owned by Hecker Bros. and used as a dry goods store. The bench mark is on the sill of the show window on the left of the entrance in the vestibule at the corner (Third street side). The bottom of the square hole is the bench mark. The following letters were poorly cut by a local stonecutter: C. & U. S. B. M. G. S.

B. M. U.—A square hole was cut in the stone window sill to the brick store at St. George, Pottawatomie County, Kans., owned by J. D. Robertson, for this bench mark. The bench mark is on the sill to the east window in the front (south) end of the building, on the right of the door as you enter. The bottom of the square hole is the bench mark. The following letters were roughly cut: U. S. B. M.

B. M. V.—A square hole was cut in the top of the stone abutment to the iron railway (Union Pacific) bridge over Big Blue River at Manhattan, Kans., for this bench mark. The bench mark is north of the track and on the west abutment. It is cut on the step in the abutment on which the end of the iron superstructure rests and is on the outer top stone. The bottom of the square hole is the bench mark. The following letters were roughly cut: U. S. B. M.

B. M. W.—A cross was cut on the east (front) face of the public school building (stone) at Ogden, Riley County, Kans., for this bench mark. The bench mark is at the northeast corner of the building, on the east end of the stone forming the corner and on the fifth stone above the ground. Two V-shaped lines forming a cross (+) were cut in the stone, and the intersection of these lines is the bench mark. The following letters were roughly cut: U. S. B. M.

B. M. X.—A cross was cut in the smooth surface of the water table of the railroad station (stone building) at Fort Riley, Riley County, Kans., for this bench mark. It is on the east end near the southeast corner. The building is of stone, roughly dressed, and the sloping water table is the only portion dressed to a smooth surface. Two V-shaped lines were cut forming a (+), and the intersection of these lines is the bench mark. The following letters were roughly cut: U. S. + B. M.

B. M. Y.—A cross was cut on the east end of the railroad station, Union Pacific (stone building), at Junction City, Riley County, Kans., for this bench mark. The bench mark is on the eighth stone from the northeast corner of the building, in the first course above the brown stone foundation showing above the platform. It is on the right of the door to the express storeroom in this end of the station. Two V-shaped lines were cut in the stone, forming a +, and the intersection of these lines is the bench mark. The following letters were roughly cut: U. S. + B. M.

B. M. Z.—A square hole was cut in the top of the stone abutment to the iron railroad bridge over Chapman Creek, one-half mile east of Chapman, Dickinson County, Kans., for this bench mark. The bench mark is on the west abutment, south of the track, and on the offset on which the end of the iron superstructure rests. The bottom of the square hole is the bench mark. The following letters were roughly cut: U. S. ■ B. M.

B. M. A_1.—A square hole was cut in the top of the stone step at the entrance to the County High School at Chapman, Dickinson County, Kans., for this bench mark. This step leads to the entrance at the east end of the building in the front or south side (not main entrance). The bench mark is on the second step above the ground, near its west end. The bottom of the square hole is the bench mark. The following letters were roughly cut: U. S. ■ B. M.

B. M. B_1.—A square hole was cut in the stone doorsill to the west entrance to the court-house at Abilene, Dickinson County, Kans., for this bench mark. The bench mark is on the upper surface and near the north end of the sill. The building is a brick structure. The bottom of the square hole is the bench mark. The following letters were cut: C. & U. S. ■ G. S. B. M.

B. M. C_1.—A cross (+) was cut in the face of the dressed stone water table, of the rough-stone railway station (Union Pacific) at Solomon City, Dickinson County, Kans., for this bench mark. The bench mark is cut on the west end of the building, between the two windows and about the center of the outer face of the fourth stone from the southwest corner of the building. The intersection of the two lines forming the cross (+) is the bench mark. The following letters were roughly cut: U. S. + B. M.

B. M. D_1.—A square hole was cut in the stone doorsill to the building at New Cambria, Saline County, Kans., used as a store and railway station (Union Pacific). The bench mark is near the west end of the sill to the east door in the front of the building, which is owned by S. P. Dowmyer. The bottom of the square hole is the bench mark. The following letters were roughly cut: U. S. ■ B. M.

B. M. E_1.—A square hole was cut in the top of the stone pier to the iron railroad bridge (Union Pacific) over Smoky Hill River one-half mile west of New Cambria, Saline County, Kans., for this bench mark. The bench mark is west of the river, north of the track, and on top of the small pier under the end of the wooden trestlework of the bridge. This small pier is built on top of a larger pier which supports the iron bridge. The bottom of the square hole is the bench mark. The following letters were roughly cut: U. S. ■ B. M.

B. M. F_1.—Two lines forming a cross (+) were cut in the face of the stone window sill to the Missouri Pacific Railway station at Salina, Saline County, Kans., for this bench mark. The bench mark is under the window in the west side of the bow window in front of the building, which is constructed of rough stone. The intersection of the two lines forming the cross is the bench mark. The following letters were cut: C. & U. S. + G. S. B. M.

B. M. G_1.—A square hole was cut in the upper surface of the stone coping to the vestibule in front of the brick building at Salina, Saline County, Kans., owned and occupied by the H. T. Lee

Mercantile Company, for this bench mark. The bench mark is on top of the vestibule floor at the left side of the steps to the main entrance on Santa Fé street. The bottom of the square hole is the bench mark. The following letters were cut: C. & + G. S. U. S. B. M.

B. M. H_1.—Two lines forming a cross (+) were cut in the outer face of the dressed stone coping to the stone foundation of the brick public school building on Elm street, one block west of Santa Fé street, Salina, Saline County, Kans., for this bench mark. The bench mark is on the east wall and near the southeast corner of the building. The intersection of the two lines forming the cross is the bench mark. The following letters were cut: C. & + G. S. U. S. B. M.

REFERENCES TO RAILROAD STATIONS AND CROSSINGS.

[Top of rail in front of stations used except when otherwise stated. Top of rail used at railway crossings.]

1. Wilder.
2. Desoto.
3. Lawrence (ground in front of station).
4. Lecompton.
5. Spencer.
6. Topeka (Union Pacific Railway station).
7. Topeka crossing of Union Pacific and Chicago, Rock Island and Pacific railways.
8. Menoken.
9. Silver Lake.
10. Kingsville.
11. Rossville.
12. St. Marys.
13. Belvue.
14. Wamego.
15. St. George.
16. Manhattan (0 of Weather Service gauge).
17. Manhattan.
18. Manhattan crossing of Union Pacific and Chicago, Rock Island and Pacific railways.
19. Ogden.
20. Fort Riley.
21. Junction City.
22. Chapman.
23. Detroit.
24. Abilene.
25. Abilene crossing of Union Pacific and Chicago, Kansas and Western railways.
26. New Cambria.

Blank page retained for pagination

APPENDIX NO. 5.—1897.

RESULTS OF MAGNETIC OBSERVATIONS MADE IN CONNECTION WITH THE GREENLAND EXPEDITION OF 1896, UNDER CHARGE OF PROF. A. E. BURTON.

By G. R. PUTNAM, Assistant.

Blank page retained for pagination

APPENDIX NO. 5—1897.

RESULTS OF MAGNETIC OBSERVATIONS MADE IN CONNECTION WITH THE GREENLAND EXPEDITION OF 1896, UNDER CHARGE OF PROF. A. E. BURTON.

By G. R. PUTNAM, Assistant.

In the summer of 1896 the writer accompanied an expedition to the west coast of Greenland, organized by and under the direction of Prof. A. E. Burton. Among the objects contemplated in the plan for the scientific work of this party was the making of magnetic and pendulum observations, and the writer was invited to undertake this part of the work. On the recommendation of Gen. W. W. Duffield, Superintendent of the United States Coast and Geodetic Survey, the Honorable Secretary of the Treasury granted permission for the writer to accompany the party and to take with him the necessary instrumental outfit belonging to the Survey, on the condition, however, that the Survey should bear no part of the expense of the field work.

This party, with others, was transported to and from its destination by Lieut. R. E. Peary, U. S. N., the well-known arctic explorer, and a number of stops were made en route, both going and returning. The plan followed in the magnetic and pendulum work was to make observations at all places where practicable during the voyage, as well as at the starting and destination points, including also one station (Halifax) where a necessary stop was made while on the way to join the expedition, the intention being to add such data as possible to the information in regard to the magnetic elements and the force of gravity in the region traversed. Such opportunities as offered for this work while en route with the general expedition were entirely incidental to the general plans, which were of course shaped by Lieutenant Peary to meet the diversified objects of the voyage and the various interests involved, being controlled also largely by the limited time available and the exigencies of arctic voyaging. The work was, however, encouraged and facilitated by Lieutenant Peary in many ways, and the stops of the ship were often arranged with the convenience of this work in view. The observations themselves were made throughout by the writer, but in the preparation of the stations and in many other ways he had the assistance of Professor Burton and the members of his party, which included, besides the writer, the following gentlemen: Prof. A. E. Burton, Prof. G. H. Barton, and Mr. R. W. Porter of the Massachusetts Institute of Technology, and Mr. A. M. Dodge and Mr. J. C. Phillips of Harvard University. To these gentlemen thanks are due for the assistance rendered.

As the starting point of the expedition was at Sydney, Cape Breton, and several transfers were required before reaching that point, the writer arranged to go at the same time as the valuable instrumental outfit and personally see to its safe handling. Sailing from Boston on July 4, 1896, Halifax, Nova Scotia, was reached on July 6. While waiting for steamer here magnetic observations were made at the secular variation station at the dock yard, permission being courteously granted by the British officers in charge. Reaching Sydney on July 10,

magnetic observations were made on July 11 and 13. By the 15th all the parties were embarked on the steamer *Hope*, a stanch Newfoundland sealing ship under command of Capt. John Bartlett. The various incidents of the voyage need not be detailed here. The accompanying outline map (plate No. 1) shows the course followed and the points at which magnetic observations were made. On August 5 the destination of Professor Burton's party, Umanak, in Danish Greenland, was reached, and here the party was left by the *Hope*, which proceeded north to carry out the other plans of Lieutenant Peary. At Umanak, because of the longer stay, a more complete series of observations was made. As the facilities available were not convenient for transporting the instrumental outfit in addition to the other necessary camp equipment, the magnetic observations were confined to the stations in and near the village of Umanak, and were not included in the plan of work on the several expeditions that were made to the heads of the fiords and the glaciers to carry out other investigations, one of which the writer accompanied. At Umanak many facilities for the prosecution of the work were afforded by Mr. Hjalmar Kunhtsen, the governor of the Danish district of Umanak, a vacant house being placed at the disposal of the party for living purposes and storage of instruments. At Godhavn, also, the Danish officials were most courteous. On September 9 the party was again taken on board the *Hope* on the return voyage, which terminated at Sydney on September 26, 1896.

DESCRIPTION AND GEOGRAPHICAL POSITION OF STATIONS.

Halifax, Nova Scotia (lat. 44° 39′·5 N., long. 63° 35′ W.).—The former magnetic station near south end of the naval dock yard was reoccupied as near as it could be identified. The magnetometer was about 26 metres south of the building known as "Officers' Quarters," 22 metres from sea wall, and 34 metres from south end of yard.

Sydney, Cape Breton, Nova Scotia, station of 1896 (lat. 46° 08′·5 N., long. 60° 11′·8 W.).—Station was in open lot belonging to Sydney Hotel and between it and post-office, being 20 metres from southeast corner of hotel, 54 metres from south corner of post-office, and 19 metres from Dorchester street.

Sydney, Cape Breton, Nova Scotia, station of 1881 (lat. 46° 08′·6 N., long. 60° 11′·7 W.; about 188 metres north and 43 metres east of preceding).—This station was occupied by Lieut. S. W. Very, U. S. N., in 1881, and the wooden post left by him was found. It is in the rear of the English Church, 16 metres southeast from Nepean street, and 38 metres northeast from the cemetery fence. Observations were made at this point on September 26, on the return from the north.

Turnavik, Labrador (lat. 55° 14′·6 N., long. 59° 20′·3 W.).—Observations were made at the identical point occupied by Lieutenant Very in 1881, on West Turnavik Island, in the midst of the small fishing settlement under charge of William Bartlett. The station is marked by a deep drill hole in the bare rock, about halfway between Bartlett's house and the house in which his men live.

Ashe Inlet, Big Island, north shore of Hudson Strait (lat. 62° 32′·8 N., long. 70° 35′·3 W.).—Magnetic station was on east side of inlet, and about 23 metres west and 5 metres north of house occupied about ten years ago as a meteorological station by one of the Hudson Bay Expeditions. Station was marked by drill hole about 2 centimetres in diameter in the rock (gneiss).

Godhavn, Disco Island, Greenland (lat. 69° 14′·1 N., long. 53° 31′·2 W.).—Magnetometer was located between the inspectors and the governor's houses, on slope of rocky ledge. It was not more than 50 metres distant from the flagstaffs and garden referred to as the site of former observations. Position was marked by a hole 2 centimetres in diameter drilled in the rock (gneiss).

Watson's Bay, Godhavn Harbor, Greenland (lat. 69° 14′·6 N., long. 53° 31′·7 W.).—This station was located across the harbor from Godhavn, possibly in the vicinity of the *Discovery's* station of 1875. It was on a slight promontory on west side of Watson's Bay as shown on Admiralty plan No. 2382. Position marked by hole 2 centimetres in diameter drilled in gneiss rock.

Umanak, Greenland (lat. 70 40′·5 N., long. 52° 08′·4 W.).—Station was located at Umanak village in the open space, 27 metres south of the church and 32 metres east of the new residence of the pastor. Position marked by a hole 2 centimetres in diameter drilled in outcropping ledge of gneiss rock. The north and south meridian stations at Umanak were on the cliffs in the meridian of the meridian telescope, 194 metres and 105 metres, respectvely, north and south of the principal magnetic station, and were each similarly marked by drill holes in the rock.

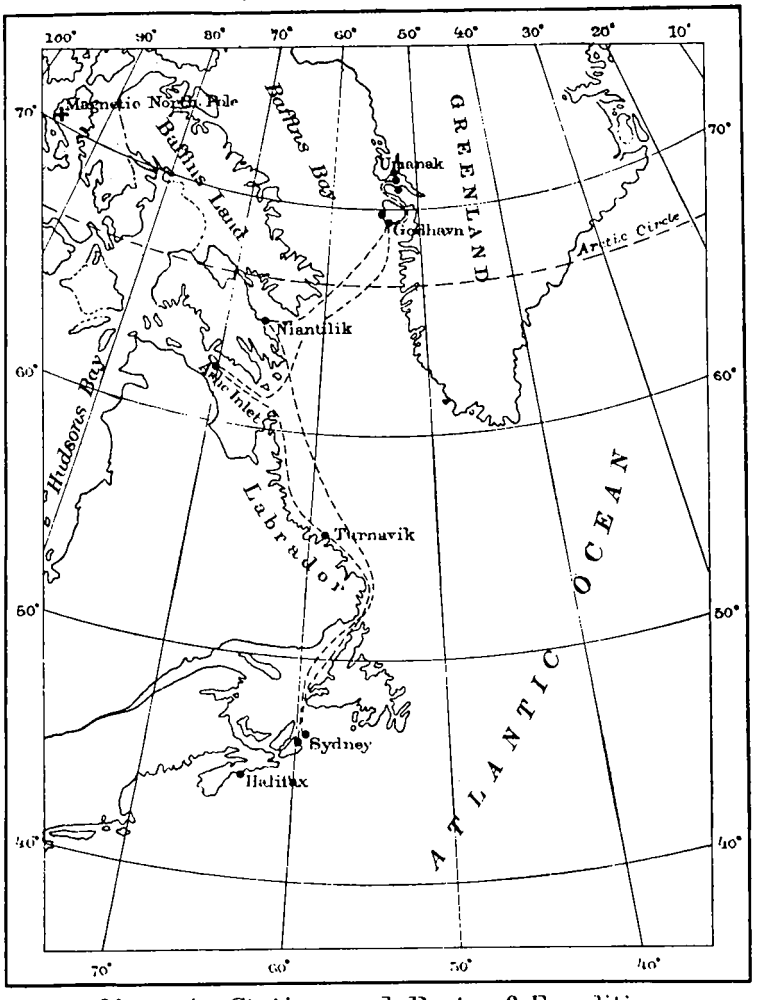

Magnetic Stations and Route of Expedition

Niantilik, Cumberland Sound (lat. 64° 53′·5 N., long. 66° 19′·5 W.).—This station was located on southwest side of Cumberland Sound on a small island lying just west of the anchorage known as Niantilik or Winter Harbor, and about 5 miles south of the whaling station and Eskimo settlement at Umanaktuak or Blacklead. The magnetometer was located on a low rocky point projecting from near the center of the southeast side of the island, and nearly south of the little sailors' cemetery, by which the island may be identified. Station was marked by hole 2 centimetres in diameter drilled in gneiss rock.

The astronomical positions as given for the stations are derived from various sources. The latitude at Umanak was determined directly by observations with the meridian telescope on four pairs of stars on two nights, the resulting value being 70° 40′ 29″·2 ± 0″·3. This would give for the position of the magnetometer 70° 40′ 28″·8, and for the principal flagstaff near the governor's house 70° 40′ 27″·6. The latitude at Niantilik is derived by comparing morning and afternoon sun observations for azimuth, and checked by a rough sun observation at noon. The remaining latitudes are from earlier observations and charts. The longitudes of all the intermediate stations have been computed from the three chronometers, Nos. 1823, 1842, and 177, which were carried on the expedition, and are based on Sydney, Cape Breton, as a starting point and Washington, D. C., as an ending point. The stationary rates were determined at Sydney, Umanak, and Washington, and the traveling rates computed for the balance of the time. The results can not be considered as very reliable, for several reasons: The longitude of Sydney is uncertain probably by a second of time, and the chronometers were subjected to a considerable variety of temperature and other conditions, including a long railroad journey from Sydney to Washington before they were last rated. Nevertheless, the results by the three chronometers are fairly accordant and agree well with previous values except for the two Greenland stations. The following table (1) gives the results by the three chronometers and a comparison with previous values. Because of its unsatisfactory performance only one-third the weight is given to the results by chronometer 177. It will be noted that the discordancies at the two Greenland stations between different authorities is considerable. At these two the values determined in 1896 have been adopted, while at the other points the means of the present and earlier results have been used.

TABLE 1.—*Summary of results for longitude and comparison with previous values.*

Station	Reference point.	Longitude west of Greenwich.													
		Chronometer.									Previous values of longitude.*				
		1823 Weight 3.			1842 Weight 3			177 Weight 1.			Weighted mean.				
		h.	m.	s.	h.	m.	s.	h.	m.	s.	h.	m.	s.	h.	m.	s.	
Turnavik, Labrador.	Magnetic station	3	57	22·2	3	57	20·6	3	57	24·5	3	57	21·8	3	57	20·4	(1)
Ashe Inlet, Hudson Strait.	Meridian telescope	4	42	22·5	4	42	24·0	4	42	26·3	4	42	23·7	4	42	18·6	(2)
Godhavn, Greenland.	Magnetic station	3	34	04·8	3	34	05·2	3	34	03·0	3	34	04·7	3	33	36·5	(3)
														3	34	48·0	(4)
Umanak, Greenland.	Meridian telescope	3	28	34·0	3	28	32·8	3	28	33·2	3	28	33·4	3	27	55·8	(5)
														3	29	00·0	(6)
Niantilik, Cumberland Sound.	Magnetic station	4	25	17·6	4	25	22·2	4	25	13·3	4	25	19·0	4	25	17·6	(7)
Sydney, Cape Breton.†	Magnetic station, 1881	4	00	42·8	4	00	45·8	4	00	28·8	4	00	42·1	4	00	46·9	(8)

* References for the previous values given: Nos. 1, 2, 4, and 6, from British charts and plans; No. 3, Bowditch, Practical Navigator; No. 5, Meddelelser om Grönland, fourth part; No. 7, Dr. Franz Boas' map; No. 8, Hydrographic Office chart.

† Sydney is included here only as a check. These longitudes are based on Sydney as a starting point and Washington as an ending point.

Instruments.—The instrumental outfit was as follows: Magnetometer No. 19 (one of the instruments described and illustrated in Appendix No. 8, Report for 1894), Dip Circle No. 4655 (Kew pattern, with horizontal support for needle, thus being suitable for work in high latitudes),

chronometers 1823 (sidereal) and 1842 and 177 (mean time), Meridian Telescope No. 13 (for latitude and time observations in connection with pendulum work), and a pocket alt-azimuth and compass instrument. There was also a tent suitable for either astronomical or magnetic observations, but it was usually necessary to carry on the latter in the open air, either on account of lack of time to set up the tent, or because it was needed for the other work. The constants of magnetometer No. 19 (and magnet 19_L) as determined by the writer at Washington in December, 1893, were as follows (in C. G. S. units):

Scale value, 1 division = 2'·00.
Corrected distances on deflecting bars, 35·020 cm. and 49·020 cm.
Temperature coefficient for 1° C., $q = 0{\cdot}00049$.
Induction coefficient, $h = 0{\cdot}0125$.
Distribution coefficient, $P = -4{\cdot}55$.
Moment of inertia at 10°·5 C., $M = 178{\cdot}38$.

The value of the coefficient P was computed also from the observations on this expedition, giving a result $-3{\cdot}80$. The mean of this and the former value was adopted, or $P = -4{\cdot}18$.

In some of the observations at Ashe Inlet, Godhavn, and Umanak, the south end of magnet 19_L was weighted with a small copper balancing ring, whose weight was 0·349 grammes, outer radius 14·0 mm., inner radius 12·0 mm., length 0·9 mm. At Ashe Inlet and Godhavn the distance from center of ring to center of magnet was 20 mm., and at Umanak 22·5 mm. For the first distance the moment of inertia was computed to be 1·693, and for the second 2·064. In this new form of magnetometer the suspending fibre is attached to a rod extending above the stirrup in which the magnet is hung. This places the point of suspension so high above the center of gravity of the magnet that the effect of dip to tilt the magnet out of the horizontal is practically overcome in ordinary latitudes. The balancing ring was employed to test this question in high latitudes, the endeavor being to so place the ring as to make the magnet more nearly horizontal. A comparison of results for the horizontal component of the earth's magnetic force (H) from observations on the same day, made with and without the balancing ring, indicates that the error due to lack of horizontality is at least very small.

	Results for H (in dynes.) With ring.	Without ring.
Godhavn, Aug. 3	0·0819	0·0819
Umanak, Aug. 14	0·0783	0·0782
Umanak, Aug. 15	0·0783	0·0782
Umanak, Aug. 18	0·0791	0·0792

Methods of observation and computation.—In the magnetic observations the system generally employed in the field work of the Coast and Geodetic Survey[1] with portable instruments was carried out so far as circumstances and available time would permit. One, two, or three days' observations were made. Where practicable both the elongations were obtained for declination, the dip was determined by two needles, the horizontal force by several sets of oscillation and deflection observations made near together, and the true meridian by sun observations near the prime vertical in both morning and afternoon. In many cases, however, this plan had to be modified by reason of lack of time or unfavorable weather, and in such event the attempt was made to get as even a distribution of data as possible under the circumstances. At Umanak the true azimuth was derived from a meridian line laid out with the meridian telescope. At Turnavik, Ashe Inlet, and Niantilik (second observation), only oscillation observations were made to determine the horizontal force. These were treated relatively, comparing the time of oscillation with that at both the preceding and following stations at which full sets were obtained, and allowing for the progressive change in the magnetic moment of the magnet. The rates of the chronometers for reducing the oscillation observations were obtained from star observations with the meridian telescope at Sydney and Umanak, and for the remaining stations are derived from the intermediate traveling rates of the chronometers.

[1] See "Directions for measurement of terrestrial magnetism," by C. A. Schott, Appendix No. 8, Report United States Coast and Geodetic Survey for 1881. For examples of late practice in reduction of magnetic observations, see App. No. 8, Report for 1890, pp. 210, 218, 230, and 231.

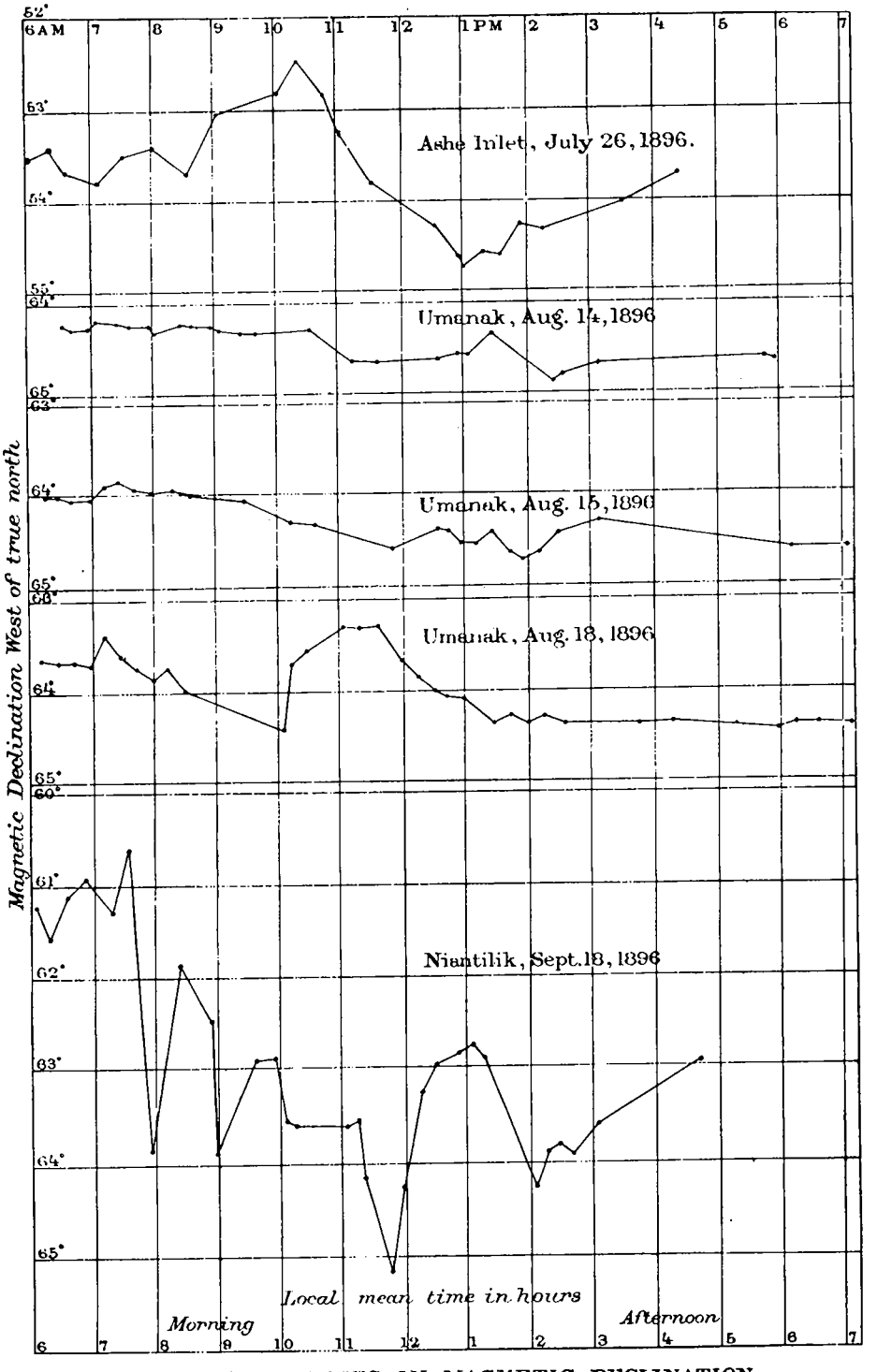

DIURNAL CHANGES IN MAGNETIC DECLINATION

Results.—The results of the magnetic observations for the different elements separately and for each day of observation are given in Tables 2, 3, and 4, and a general summary of all the results is given in Table 5. In Table 2, when the extreme declinations observed were assumed to be the elongations for the day, they are indicated by an asterisk (*), and in such cases the mean of the two elongations is taken as the mean declination for the day. When because of lack of time it was impossible to obtain these elongations, the declinations have been reduced to the mean of the day from such comparative data as were available, the references being given in the footnote. Where the declination observations were made, more or less continuously, covering any considerable part of the day, the average declination for this interval is given in the table, this average being obtained graphically by plotting the observed values. For five days, on each of which the readings covered an interval of about twelve hours, the results are shown in the diagram (pl. 2), plotted to the same scale for the different places. The diagram for Niantilik on September 18 indicates a considerable magnetic disturbance on that date, as was also very apparent when the observations were in progress, for the needle would frequently move out of range of the telescope, necessitating the changing of the azimuth circle. There was a change of over 3° in twenty minutes; at $7^h\ 35^m$ a. m. the needle pointed 60° 35′ W. of N., while at $7^h\ 55^m$ it pointed 63° 50′ W. of N., and the total range for the day was over 4½°. Such disturbances, however, are not unprecedented in arctic experience.* The last column in Table 2 gives the diurnal range for the days on which elongations were obtained. These ranges can not be considered as average values for the respective localities, being possibly affected by abnormal conditions on these particular days, as is evident in the case of Niantilik. At Umanak, Godhavn, and Sydney declination observations were made at two or three neighboring points. At Sydney the difference obtained was insignificant, for dip as well as for declination. At Umanak† the westerly declination increases about half a degree in going from 100 to 200 metres either north or south from the magnetic station. Near Godhavn the declination is slightly greater across the harbor at Watsons Bay than in the village, though the difference is not so great as was indicated by the English observations in 1875, which may have been made in somewhat different localities.

---

*In The Manual of Natural History, Geology, and Physics of Greenland (London, 1875) it is stated that McClintock observed a change of 15°, and Sir Edward Belcher noted a disturbance of 27°·6 accompanying an aurora.

†A considerable number of compass observations of declination were made about Umanak Fiord by Danish officers (Assistant Steenstrup and Lieutenant Hammer) in 1878 and 1879. The following passages translated from Meddelelser om Grönland, fourth part, page 177 (Copenhagen, 1883), give some instances of the irregularity of the declination noted by them in this region: "It is a familiar saying that the magnet needle on these shores is nearly dead, and that the magnetic declination, especially in trap-rock regions, is so variable that for geographical measurements it is necessary to determine it for every bearing, for it changes with every setting up of the compass. Thus a small movement, only some few feet, effected on the Shades Islands a change of 5° in the measured declination; indeed, at Igdlorsuit, upon Ubekjendt Island, a movement from the houses up to the top of the mountain, about 1 500 feet high, lying about 2 000 feet away, was sufficient to change the declination from 74°·0 to 34°·9. * * * In gneiss regions the local effect is not near so strong, but while the trap generally causes greater declinations than one would expect from the geographical position, gneiss, on the contrary, not unusually appears to give less declinations." It is further remarked that normal conditions can often be found only upon the ice.

TABLE 2.—*Summary of results of magnetic declination observations.*

Station.	Date (civil), 1896.	Easterly extreme.		Westerly extreme.		Average declination during time of observation.		Correction to reduce to mean declination.†	Adopted mean declination.	Diurnal range in declination.
		Local mean time.	Declination.	Local mean time.	Declination.	Interval included, local mean time.	Average declination.			
		h. m.	° ′	*h. m.*	° ′	*h. m.* *h. m.*	° ′	′	° ′	° ′
1. Halifax	July 6–7	7 31 A. M.	*20 35·5 W.	12 46 P. M.	*20 41·6 W.				20 38·6 W.	0 06·1
2. Sydney (sta. 1896)	" 11	7 40 "	*24 41·4	1 25 "	*25 01·3				24 51·4	0 19·9
"	" 13	8 44 "	*24 49·8	2 00 "	*25 01·1				24 55·4	0 11·3
"	Mean								24 53·4	0 12·4
3. Turnavik	July 20	8 53 A. M.	38 17·2	12 03 "	38 34·4	8 53 A. M. to 12 03 P. M.	38 28·4 W.	− 2·0	38 26·4	
4. Ashe Inlet	" 26	10 23 "	*52 29·4	1 08 "	*54 40·7	6 07 " " 4 28 "	53 45·9		53 35·0	2 11·3
5. Godhavn	Aug. 3	3 17 "	63 33·8	9 04 A. M.	61 37·3	2 08 " " 9 21 A. M.	62 43·5	− 1·9	62 41·6	
6. Watsons Bay	" 3					10 05 "	63 12·2	− 5·3	63 06·9	
7. Umanak	" 14	7 15 A. M.	*64 06·6	2 30 P. M.	*64 49·2	6 37 " " 6 00 P. M.	64 26·8		64 27·9	0 42·6
"	" 15	7 30 "	*63 46·6	2 00 "	*64 44·1	6 20 " " 9 05 "	64 19·8		64 15·4	0 57·5
"	" 18	11 05 "	*63 16·1	6 00 "	*64 28·8	5 55 " " 8 05 "	64 04·3		63 52·5	1 12·7
"	Mean								64 11·9	0 57·6
8. Umanak S. mer.	Aug. 21					5 30 P. M.	65 07·5	−22·5	64 45·0	
9. Umanak N. mer.	" 21					6 00 "	65 06·0	−28·0	64 38·0	
5. Godhavn	Sept. 11	2 07 P. M.	63 14·0	6 20 P. M.	63 52·5	2 00 P. M. to 6 30 "	63 34·4	−20·6	63 13·8	
10. Niantilik	" 18	7 35 A. M.	*60 35·3	11 40 A. M.	*65 09·4	5 35 A. M. to 3 40 "	62 54·9		62 52·4	4 34·1
11. Sydney (sta. 1881)	" 26					4 25 "	24 56·7	− 1·4	24 55·3	

* The extreme declinations marked thus were assumed from their relation to the other observed values to be the eastern and western elongations, respectively, for the day. Where these elongations were obtained, their mean is taken as the mean declination for the day without further correction.

† The corrections to reduce to mean declination were derived as follows: Turnavik, July 20, from table of corrections for Toronto (Coast and Geodetic Survey Report, 1881, App. 8), allowing for difference in H; Godhavn and Western Bay, August 3, by comparison with three days' observations at Umanak; Umanak, south and north meridian, August 21, by direct comparison with principal magnetic station, Umanak; Godhavn, September 11, by comparison with three days' observations at Umanak; Sydney, September 26, from table of corrections for Toronto.

TABLE 3.—*Summary of results of magnetic dip observations.*

Station.	Date, 1896.	Epoch local mean time.	Magnetic dip.			Differences No. 1—No. 2.
			Needle No. 1.	Needle No. 2.	Mean of two needles.	
		h. m.	° ′	° ′	° ′	′
1. Halifax	July 6	5 36 P. M.	73 53·2 N.	73 54·9 N.	73 54·0 N.	−1·7
2. Sydney (station 1896)	" 11	11 50 A. M.	74 40·8	74 40·0	74 40·4	+0·8
"	" 13	11 16 A. M.	74 37·2	74 36·4	74 36·8	+0·8
"	Means		74 39·0	74 38·2	74 38·6	
3. Turnavik	July 20	11 19 A. M.	79 32·9	79 28·8	79 30·8	+4·1
4. Ashe Inlet	" 26	12 09 P. M.	83 54·0	83 59·6	83 56·8	−5·6
5. Godhavn	Aug. 3	5 14 A. M.	81 47·2	81 46·5	81 46·8	+0·7
7. Umanak	" 14	6 54 P. M.	82 03·2	82 01·7	82 02·4	+1·5
"	" 15	11 16 A. M.	82 04·0	82 00·5	82 02·2	+3·5
"	" 18	9 26 A. M.	81 55·6	81 55·9	81 55·8	−0·3
"	Means		82 00·9	81 59·4	82 00·1	
5. Godhavn	Sept. 11	4 34 P. M.	81 40·2	81 41·0	81 40·6	−0·8
10. Niantilik	" 18	10 42 A. M.	83 55·0	83 54·5	83 54·8	+0·5
11. Sydney (station 1881)	" 26	4 52 P. M.	74 35·8	74 38·2	74 37·0	−2·4

TABLE 4.—*Summary of results of horizontal force observations.*

Station.	Date, 1896.	Epoch. (Local mean time.)	Horizontal magnetic force H.	Magnetic moment of magnet 191. m at 16°·7 C.*
		h. *m.*	*dyne.*	
1. Halifax	July 6	4 24 P. M.	0·1631	418·5
"	" 6	4 30 "	0·1633	418·1
" means			0·1632	418·3
2. Sydney	" 11	10 25 A. M.	0·1548	416·3
"	" 11	10 32 "	0·1546	416·5
"	" 13	9 48 "	0·1548	416·6
"	" 13	10 08 "	0.1548	416·4
" means			0·1547	416·4
3. Turnavik	" 20	10 44 "	0·1074	
"	" 20	11 48 "	0·1074	
" means			0·1074	
4. Ashe Inlet †	" 26	11 24 "	‡ 0·0637	
5. Godhavn	Aug. 3	2 58 "	‡ 0·0819	413·6
"	" 3	3 21 "	0·0819	413·7
" means			0·0819	413·6
7. Umanak	" 14	10 32 "	0·0782	413·1
"	" 14	11 18 "	‡ 0·0783	412·3
"	" 15	9 17 "	‡ 0·0783	411·7
"	" 15	9 32 "	0·0779	710·0
"	" 15	10 14 "	0·0785	411·9
"	" 18	6 35 P. M.	0·0793	410·5
"	" 18	7 13 "	‡ 0·0791	411·5
"	" 18	7 26 "	0·0790	411·1
" means			0·0786	411·5
5. Godhavn	Sept. 11	3 15 "	0·0825	412·6
10. Niantilik	" 18	6 47 A. M.	0·0653	410·1
"	" 18	2 57 P. M.	0·0668	
" means			0·0660	

* The magnetic moment of this magnet, as determined in December, 1893, soon after the completion of the instrument and before its use in the field, was 491·3 at 16°·7 C.

† Only a portion of a set of oscillations was obtained at this station.

‡ In the observations marked thus the south end of the magnet was weighted with a small balancing ring.

TABLE 5.—*Summary of results of magnetic observations.*

	Station.	Latitude north.	Longitude west of Greenwich.	No. of days observations.	Date, 1896.	Declination.	Diurnal range in declination.	Dip θ	Horizontal force H	Total force F
		° ′	° ′			° ′	° ′	° ′	*dyne.*	*dyne.*
9	Umanak, Greenland, north meridian	70 40·6	52 08·4	1	Aug. 21	64 38·0 W.				
8	Umanak, Greenland	70 40·5	52 08·4	3	" 14, 15, 18	64 11·9	0 57·6	82 00.1 N.	0·0786	0·5649
7	Umanak, Greenland, south meridian.	70 40·4	52 08·4	1	" 21	64 45·0				
6	Watsons Bay, Greenland	69 14·6	53 31·7	1	" 3	63 06·9				
5	Godhavn, Greenland	69 14·1	53 31·2	2	Aug. 3, Sept. 11	62 57·7		81 43·7	0·0822	0·5714
10	Niantilik, Cumberland Sound	64 53·5	66 19·5	1	Sept. 18	62 52·4	4 34·1	83 54·8	0·0660	0·6224
4	Ashe Inlet, Hudson Strait	62 32·8	70 35·3	1	July 26	53 35·0	2 11.3	83 56·8	0·0637	0·6040
3	Turnavik, Labrador	55 14·6	59 20·3	1	" 20	38 26·4		79 30·8	0·1074	0·5901
11	Sydney, Cape Breton, station 1881	46 08·6	60 11·7	1	Sept. 26	24 55·3		74 37·0		
2	Sydney, Cape Breton, station 1896	46 08·5	60 11·8	2	July 11, 13	24 53·4	0 12·4	74 38·6	0·1547	0.5842
1	Halifax, Nova Scotia	44 39·5	63 35·0	1	" 6, 7	20 38·6	0 06·1	73 54·0	0·1632	0.5885

In Table 6 is given a collection of former magnetic observations made at or in the vicinity of these stations. For many of these points it is probable that this data is quite incomplete, for results of this nature are published in a wide range of local literature often difficult of access. With the exception of Halifax[1] the observations are scarcely complete enough nor do they cover a sufficiently long interval of time to give satisfactory analytical expressions for the secular variation of the declination and dip. For most of the stations, however, the data are sufficient to clearly indicate the present tendency in the change of the magnetic elements. It appears that at all the points (omitting Niantilik, for which no earlier information was found) the westerly declination is diminishing, the northerly dip is diminishing, the horizontal force is increasing, and the total force is decreasing.

TABLE 6.—*Collection of magnetic observations at or near stations occupied in 1896.*

UMANAK, GREENLAND, LAT. 70° 40′ N., LONG. 52° 08′ W.

No.	Date.	Declination.	Dip.	Horizontal force.	Total force.	Observer.	Remarks and references.
		° ′	° ′	*dyne.*	*dyne.*		
1	1823–24	70 50 W.				Graah	Meddelelser om Grönland, fourth part, p. 282.
2	1878	67·9				Steenstrup and Hammer	Meddelelser om Grönland, fourth part, p. 252. Steenstrup and Hammer give several other observations of declination in this vicinity, as follows: 1879, ¼ mile north of Umanak on ice, 70°·2 W.; 1878, Umanak, Little Lookout, 68°·6 W.; 1879, Umanak, Little Lookout (mean 2 observations), 67°·8 W.; 1879, Umanak, on ice (mean 3 observations), 69°·3 W.
3	1896, Aug. 14–18	64 12	82 00 N.	0·0786	0·5649	Putnam	

GODHAVN, GREENLAND, LAT. 69° 14′ N., LONG. 53° 31′ W.

		° ′	° ′	*dyne.*	*dyne.*		
1	1824·5	70 24 W.	82 54 N.			Parry	At Whale-fish Islands, lat. 68° 59′ N., long. 53° 18′ W. Phil. Trans. Royal Society, vol. 90, p. 414.
2	1636·5		82 23			James Ross	
3	1848·5		82 24			Ross and Robinson	
4	1850·5		82 12			Allen	
5	1851·5				0·5602	Ommanney	
6	1852·5	70 47	82 10			Belcher	
7	1853·5		81 48		0·5634	Bellot	Phil. Trans., vol. 90, p. 414.
8	1858·5	73 28				McClintock	At Whale-fish Islands. Phil. Trans., vol. 90, p. 414.
9	1861, Aug. 31, Sept. 7		81 51	0·0812	0·5731	Radcliff	Station in garden, rear of inspector's house, Haye's Polar Expedition, Smith's Contrib., Vol. XV, p. 105.
10	1875, July 9–13	67 13	81 48	0·0832	0·5789	Alert	Near flagstaff.
11	1875, July 8–12	68 20	81 52	0·0816	0·5740	Discovery	Opposite side of harbor to flagstaff. Arctic Exp. of 1875-76; Proc. Royal Society, Vol. XXIX, p. 29. (Remark on p. 29: "The values of the declination and inclination observed at various stations round the harbor of Godhavn showed considerable differences, evidently caused by local magnetic disturbance.")
12	1876, Sept. 27	68 20				Discovery	
13	1884, July 8	65 35				Lebree	Greely Relief Expedition, Naval Prof. Papers No. 19, p. 94.
14	1896, Aug. 3, Sept. 3	62 58	81 44	0·0822	0·5714	Putnam	Near inspector's garden.
15	1896, Aug. 3	63 07				Putnam	Opposite side of harbor at Watsons Bay.

[1] Mr. Schott has derived the following expression for the change of the magnetic declination at Halifax: $D = +16°{\cdot}18 + 4°{\cdot}53 \sin(1{\cdot}0\,m + 46°{\cdot}1)$, where D is the declination at a desired time t expressed in years and fractions of a year (+ for westerly declination), and $m = t - 1850{\cdot}0$. (Report United States Coast and Geodetic Survey for 1888, app. No. 7, p. 224.) For 1896–97 this formula gives $D = 20°\ 42'$ W., differing only 3′ from the observed value.

TABLE 6.—*Collection of magnetic observations at or near stations occupied in 1896*—Continued.

NIANTILIK, CUMBERLAND SOUND, LAT. 64° 54′ N., LONG. 66° 20′ W.

[No record found of previous observations.]

ASHE INLET, HUDSON STRAIT, LAT. 62° 33′ N., LONG. 70° 35′ W.

No.	Date.	Declination.	Dip.	Horizontal force.	Total force.	Observer.	Remarks and references.
		° ′	° ′	*dyne.*	*dyne.*		
1	1884, Aug. 2		84 16 N.			Gordon	Report of Second Hudsons Bay Expedition, 1885, p. 78.
2	1888	55 30 W.					British Admiralty Chart No. 1221.
3	1896, July 26	53 35	83 57	0·0637	0·6040	Putnam	

TURNAVIK, LABRADOR, LAT. 55° 15′ N., LONG. 59° 20′ W.

		° ′	° ′	*dyne.*	*dyne.*		
1	1881, July 28–29	40 23 W	79 56 N.	0·1034	0·5916	Very.	Report United States Coast and Geodetic Survey, 1881, p. 192.
2	1896, July 20	38 26	79 31	0·1074	0·5901	Putnam.	

SYDNEY, CAPE BRETON, LAT. 46° 09′ N., LONG. 60° 12′ W.

		° ′	° ′	*dyne.*	*dyne.*		
1	1848·5	23 41 W.				Keely.	Position given lat. 46° 17′, long. 60° 23′ } Phil. trans.
2	1862·5		76 03 N.			Shadwell.	Position given lat. 46° 16′, long. 60° 08′ } V. 90, p. 384.
3	1881, Oct. 21, 22	25 12	75 10	0·1515	0·5918	Very.	Report United States Coast and Geodetic Survey,
4	1896, July 11, 13	24 53	74 39	0·1547	0·5842	Putnam.	1881, p. 192.
5	1896, Sept. 26	24 55	74 37			Putnam.	At Very's station of 1881.

HALIFAX, NOVA SCOTIA, LAT. 44° 40′ N., LONG. 63° 35′ W.

		° ′	° ′	*dyne.*	*dyne.*		
1	1604–1612	16¼ W.				Champlain.	All of the values for Halifax, excepting the last one, are taken from two papers by Assistant C. A. Schott, Report Coast and Geodetic Survey for 1888, App. No. 7, p. 191, and Report Coast and Geodetic Survey for 1885, App. No. 6, p. 226. The individual references are there given.
2	1630 about	14					
3	1700	{ 13 / 12½					
4	1750	12					
5	1756	12 50					
6	1775	13 35					
7	1798	16 30					
8	1818 (?)	17 28					
9	1821 June–Nov.	17 36					
10	1833	17 30					
11	1834, May 27		75 33 N. }	0·1485	0·5966	{ Howe.	
12	1837, June 7		74 58 }			{ Howe.	
13	1838·5		74 45			Estcourt.	
14	1847·5		75 37		0·6026	Keely.	
15	1852–53	18 10					
16	1852–53	18 51				Bayfield.	
17	1860, July 22	19 55				Hill.	
18	1866, April	21 06				Orlebar.	
19	1873, May 13–16	21 35	74 48	0·1561	0·5954	Maclear and Bromley.	
20	1879, Sept. 8–10	20 43	74 39	0·1592	0·6012	Baylor.	
21	1881, Nov. 2		74 29	0·1595	0·5962	Very.	
22	1896, July 6, 7	20 39	73 54	0·1632	0·5885	Putnam.	

Blank page retained for pagination

APPENDIX NO. 6—1897.

RESULTS OF PENDULUM OBSERVATIONS MADE IN 1895 AND 1896.

By G. R. PUTNAM, Assistant.

Blank page retained for pagination

APPENDIX NO. 6—1897.

RESULTS OF PENDULUM OBSERVATIONS MADE IN 1895 AND 1896.

By G. R. PUTNAM, Assistant.

In this report will be brought together the results of a number of determinations of the force of gravity made at scattered points and at various times during the years 1895 and 1896. No systematic investigations in this line have been carried out by the Coast and Geodetic Survey since the series described in Appendix No. 1, Report for 1894. The determinations covered by the present report were for the most part made in connection with and incidental to other work of the Survey, and the location of the stations was consequently entirely dependent on such other operations. Thus of the fourteen stations (besides Washington) pendulum observations at ten were made in connection with telegraphic longitude determinations, nine of these points being located in the southern part of the United States, and one in the extreme northeastern part. Four of the gravity determinations were made in connection with the Greenland expedition of 1896, under charge of Prof. A. E. Burton. With the permission of the honorable Secretary of the Treasury, and of the Superintendent of the Coast and Geodetic Survey, the writer accompanied this expedition on the invitation of Professor Burton, by whom he was requested to undertake the magnetic and pendulum observations contemplated in its plan. The circumstances of the expedition are referred to in the separate report on the magnetic work.[1] Several of the stops of the ship, which gave sufficient time for the magnetic observations, were not long enough to allow of setting up the pendulum apparatus and the meridian telescope. Complete pendulum and time observations were obtained at two points, Sydney, Cape Breton, and Umanak, Greenland. At two other stations, Ashe Inlet and Niantilik, the pendulum observations themselves were sufficient, but the time determinations failed because of unfavorable weather, so that only an approximate rate correction can be introduced.

Description and geographical position of stations.—The position of the pendulum stations is shown on the accompanying map (plate 2), together with the course of the Greenland expedition. In Table 1 is a descriptive summary of the locations, the support of the pendulum case, and the measured flexure of the support and case. It will be noted that all the stations, with one exception (Niantilik), were located in buildings, and generally in basement rooms. The support for the case was always masonry, generally very low (not over 20 cm. above the floor). The flexure was measured statically as described in Appendix No. 1, Report for 1894, page 12. The figures in the last column represent the horizontal movement of the knife-edge when a force of 1·5 kilogrammes was applied horizontally in the plane of oscillation. The flexure was small and fairly uniform at these stations, probably a result of the uniform method of mounting the pendulum case on very low and solid foundations.

The geographical positions of the stations are given with the final summary of results in Table 6. For the points in the United States, the latitudes and longitudes are derived from primary astronomical stations of the Coast and Geodetic Survey, with which the pendulum stations were connected. The derivation of the positions of the stations on the Greenland expedition is detailed in the report on magnetic work in connection therewith. The elevations of the stations are based upon the best available sources. The pendulum stations were connected by hand level with known bench marks, railroad grades, or directly with the mean sea level, to obtain which rough tidal observations were sometimes made.

[1] Appendix No. 5, Report United States Coast and Geodetic Survey for 1897.

TABLE 1.—*Location of stations, support for pendulum case, and flexure.*

Station and location.	Support for pendulum case.*	Flexure.
		Microns.
1. Washington, D. C. Office U. S. Coast and Geodetic Survey on Capitol Hill, pendulum room in southwest corner of basement.	Massive brick pier with capstone.	1·0
2. Austin, Tex. Capitol building, basement room southeast of rotunda	Concrete floor	2·0
3. Laredo, Tex. Commissary of Fort McIntosh, basement room	Low brick pier against foundation wall.	2·0
4. Galveston, Tex. Ball High School, storeroom, ground floor	Concrete floor	2·0
5. Austin, Tex. University of Texas, main building, "Aquarium" room in basement.	Corner of concrete wall.	1·0
6. New Orleans, La. City Hall, hallway in basement of building	Slate floor	2·0
7. Calais, Me. High School building, basement	Concrete floor	2·0
8. Key West, Fla. Post-office building, southeast basement room	Concrete floor	2·0
9. Charleston, S. C. South Carolina Military Academy ("Citadel"), ground floor storeroom, southwest corner.	Brick floor	2·0
10. Atlanta, Ga. State Capitol, northwest basement room of Washington-street wing.	Asphaltum floor	2·0
11. Little Rock, Ark. Post-office building, north center basement room.	Concrete floor	2·0
12. Sydney, Cape Breton, Nova Scotia. Sydney Hotel, front part of basement.	Low brick pier against foundation wall.	1·5
13. Ashe Inlet, Big Island, north side of Hudson Strait, in a stone hut, near Canadian meteorological station.	Bed rock	[1·0]
14. Umanak, Greenland. Building known as "Gamle Præstebolig," ground floor.	Low brick pier on stone floor.	2·0
15. Niantilik (or Winter Harbor), Cumberland Sound. In a tent, on small island on which is located sailors' cemetery.	Bed rock	[1·0]

*In the cases where the support is given as a floor or bed rock, the pendulum case was usually mounted on one layer of bricks cemented to the floor or rock, the footplates being cemented to the bricks.

The location of the stations was favorable as regards freedom from outside vibration in all cases excepting New Orleans. Here the necessity of being convenient to the longitude observatory compelled the location of the pendulum apparatus in a basement close to a heavily traveled street. The jar of passing vehicles was quite noticeable, partly, perhaps, because of the generally unstable condition of the underlying ground. Although the coincidences were sometimes irregular, the periods of the three pendulums are in good accord, and no discrepancy appears between day and night observations, notwithstanding a considerable difference in the amount of traffic.

Instruments and methods of observation.—The half-second pendulum apparatus and pendulums A4, A5 and A6 were used throughout this work. These pendulums (plate 1) have not been altered and have received no known injury since their first use in January, 1894. With a few slight exceptions, the methods of observation and computation described in Appendix No. 1, Report for 1894, were followed in the present work. As intimated on page 19 of that report, the plan was adopted of using two knife-edges. Pendulum A4 was always swung on knife-edge AII, and pendulums A5 and A6 were swung on knife-edge AI. Each of these edges is set in its own metal block so that it can be readily adjusted and secured in the pendulum case. The use of the two edges furnishes, it is believed, a necessary check on the invariability of the knife-edge, which is, of course, a vital part of the pendulum, whether it is a part of it or a part of the support, as in this form of apparatus.

Because of the considerable change of period at the northern stations, it was found no longer sufficiently accurate to consider the temperature coefficient as a constant quantity. The value heretofore used, $0^s{\cdot}0000049$ for 1° C, is correct for a period of $0^s{\cdot}5007484$. Expressed as a function of the period (P), it becomes $0^s{\cdot}00000837 \times P$ for 1° C.

Thermometer Green 6604 was used in the dummy pendulum at all these stations, as well as in all the previous series with these pendulums, with the exception of the observations at Washington in January, 1894. Its corrections were determined by the Office of Weights and Measures in June, 1890, and again in November, 1896, and its zero point was also tested in January and June, 1896. The correction at 0° C has changed from $0°{\cdot}00$ in 1890 to $-0°{\cdot}07$ in 1896, and there is a fairly accordant change throughout the scale. The corrections adopted in this

work are a mean of the 1890 corrections with this change of −0·07 applied throughout, and the 1896 corrections, as shown in the following table:

Corrections to thermometer Green 6604.

	Corrections determined June, 1890.	Corrections of June, 1890, corrected for change in zero point.	Corrections determined November, 1896.	Adopted means.
	° C.	° C.	° C.	° C.
At 0° C.	—0·00	—0·07	—0·07	—0·07
5	— ·01	— ·08	— ·12	— ·10
10	— ·04	— ·11	— ·11	— ·11
15	— ·06	— ·13	— ·15	— ·14
20	— ·08	— ·15	— ·16	— ·16
25	— ·13	— ·20	— ·16	— ·18
30	— ·08	— ·15	— ·19	— ·17
35	— ·13	— ·20	— ·18	— ·19
40	.....	.....	— ·15	— ·15

Rates of chronometers.—The chronometer corrections were determined by star observations made with transit instruments in the meridian, the observations being recorded chronographically, except at Sydney and Umanak, where they were made by the eye-and-ear method. The pendulum swings covered the entire interval between time observations, being continued beyond the usual forty-eight hours, when necessary, until time was obtained. The comparisons between chronometers were made either chronographically or by coincidence of beats between mean time and sidereal chronometers. At the stations in the United States, the time observations were made with the longitude transits, and usually the time determinations made for the longitude work were used directly. At Sydney and Umanak a small meridian telescope (No. 13, focal length 65·8 cm., aperture 5·1 cm.) was used. As already mentioned, the time observations at Ashe Inlet and Niantilik failed because of unfavorable weather and the limited length of stay. The adopted rates at these points were obtained by combining the rates at the preceding and following stations, and the traveling rate, giving equal weight to the chronometers. In each case it is estimated that the adopted rate is uncertain by at least a second of time, which would correspond to an uncertainty of about $\frac{1}{40000}$ in g (or 0.025 dyne or cm.).

The rate at Ashe Inlet was derived as follows:

Chronometers.	1823 S. T.	1842 M. T.	177 M. T.
	s.	s.	s.
Rate at Sydney, July 10–12	+1·62	−0·24	—
Traveling rate, July 16–Oct. 3 (omitting Umanak)	+2.51	+2·17	+3·70
Rate at Umanak, Aug. 7–Aug. 20	+2·29	+1.43	+4·82
Means	+2·14	+1·12	+4·26
Rates of mean-time chronometers, derived from above average rate of 1823 and comparisons before and after pendulum observations		+0·80	+4·20
Adopted rates (weighted mean giving half weight to latter values so as to give equal effect to all three chronometers)		+1·01	+4·24

The rate at Niantilik was derived as follows:

Chronometers.	1823 S. T.	1842 M. T.
	s.	s.
Rate at Umanak, Aug. 7–20	+2·29	+1·43
Traveling rate, July 16–Oct. 3 (omitting Umanak)	+2·51	+2·17
Rate at Washington, Oct. 6–15	+1·91	+1·59
Means	+2·24	+1·73
Rate of 1842, derived from above average rate of 1823 and comparisons before and after pendulum observations		+0·82
Mean, adopted rate		+1·28

Table 2 gives a summary of the rates of the chronometers which were used directly in the pendulum observations at the different stations. In some cases two chronometers were employed, and in others only one. At Sydney one mean-time and one sidereal chronometer were used, and at the other three northern stations mean-time chronometers exclusively were used in the pendulum observations directly. This became necessary because the increase in the force of gravity so diminished the period of the pendulums that it approached closely to the sidereal half second, and the coincidence interval with a sidereal chronometer would have become inconveniently long, but the pendulum was enough faster than a mean-time chronometer to give convenient coincidence intervals with it. With a mean-time chronometer the pendulum makes one more oscillation than the chronometer beats half seconds in an interval between two coincidences, so that the formula for the period becomes $P=\frac{s}{2s+n}$ where s is the unmber of seconds and n the number of coincidence intervals. The rates are all referred to sidereal time, by adding $\frac{s}{+236.555}$ to the mean-time rate as expressed in mean-time seconds on mean time, after reducing the latter to sidereal seconds by adding the necessary small correction from Table III of the American Ephemeris.

TABLE 2.—*Summary of rates of sidereal chronometers.*

Station.	Interval.	Daily rate on sidereal time (+ losing, − gaining).							
		Chronometer number.							
		1824	1823	1841	1818	1771	1829	1836	1828
	1895	s.	s.	s.	s.	s.	s.	s.	s.
Washington	Jan. 11–Jan. 13	+5·87	+2·35						
Austin	Apr. 29–Apr. 30			+0·56					
	" 30–May 1			+0.50					
Laredo	May 10– " 11				+4·35				
	" 11– " 12				+4·97				
Galveston	" 21– " 22				+4·42				
	" 22– " 23				+4·48				
	" 23– " 24				+4·62				
Austin	June 5–June 6			+0·70					
	" 6– " 7			+0·35					
	" 10– " 11			+1·19					
	" 11– " 12			+0·28					
New Orleans	July 23–July 24				+5·16				
	" 24– " 25				+5·08				
	" 25– " 26				+5·15				
Washington	Aug. 2–Aug. 4				+4·50	+4.52			
Calais	" 21– " 22						+2·68		
	" 22– " 23						+2·53		
	1896								
Washington	Jan. 21–Jan. 24			+2·58				+1·45	
Key West	Feb. 8–Feb. 9								−0·28
	" 9– " 10								−0·88
Charleston	" 25– " 26			+2·39					
	" 26– " 27			+2·73					
Atlanta	Mar. 7–Mar. 8			+1·97					
	" 8– " 9			+1,90					
Little Rock	Apr. 4–Apr. 5								−0·29
	" 5– " 6								−0·21
Washington	June 22–June 26						+2·95		
Sydney	July 10–July 11		+1·59						
	" 11– " 12		+1·66						
Washington	Oct. 15–Oct. 16	+0·82	+1·74						
	" 16– " 17	+0·67	+1·60						

TABLE 2.—*Summary of rates of mean-time chronometers*—Continued.

Station.	Interval.	Daily rate on mean time (+ losing, — gaining.)		Daily rate on sidereal time.	
		Chronometer number.		Chronometer number.	
		1842	177	1842	177
	1896	*s.*	*s.*	*s.*	*s.*
Sydney	July 10–July 11	−0·29		+236·26	
	" 11– " 12	−0·18		+236·37	
Ashe Inlet	" 25– " 26	+1·01	+4·24	+237·57	+240·81
Umanak	Aug. 8–Aug. 11	+1·48	+4·81	+238·04	+241·38
	" 11– " 12	+1·53	+4·88	+238·09	+241·45
Niantilik	Sept. 17–Sept. 18	+1·28		+237·84	

Results.—In Table 3 are given the details of the observations and reductions for each swing. The temperatures as here given are the mean for the swing, properly weighted if more than two readings were taken, and corrected for thermometer error. The pressures are reduced to 0° C. In Table 4 are collected the mean periods for each pendulum and station, all reduced to the standard conditions, arc infinitely small, temperature 15° C., pressure 60 mm. at 0° C., sidereal time and inflexible support. The differences of each pendulum from the mean of the three are also given.

From these mean periods gravity at the various stations was computed from the relation $g_0 = \frac{P_w^2}{P_0^2} g_w$, gravity at Washington, Coast and Geodetic Survey Office (g_w) being taken to be 980.098 dynes or centimetres, as before, and the mean of the periods at Washington (P_w) before and after each series being used for that series. The results for g computed separately for each pendulum and station, with the mean and differences from the mean, are given in Table 5. The unusual discrepancy between the values from the separate pendulums in the case of Laredo appears to be due to an error in the chronometer comparisons, which was not noticed in time for rectification. The results for this station must be considered as having a small uncertainty on this account. At Ashe Inlet and Niantilik the results can only be considered as approximations because of the failure to obtain sufficient time observations, as referred to under the head of rate. At these two stations each pendulum was swung only once, in position "reversed," but an examination of the periods at the various stations indicates little or no systematic difference between the periods in the two positions.

TABLE 3.—*Pendulum observations and reductions.*

WASHINGTON, D. C

Swing No.	Pendulum.	Position.	Knife-edge.	Date.	Coincidence interval. Chronometer. 1824.	Coincidence interval. Chronometer. 1823.	Total arc. Initial.	Total arc. Final.	Temperature.	Pressure.	Period uncorrected. Chronometer. 1824.	Period uncorrected. Chronometer. 1823.	Corrections (7th decimal place). Arc.	Temp.	Pressure.	Rate. 1824.	Rate. 1823.	Flexure.	Period corrected. Chronometer. 1824.	Period corrected. Chronometer. 1823.	Mean.
				1895.	*s.*	*s.*	′	′	°*C.*	*mm*	*s.*	*s.*							*s.*	*s.*	*s.*
1	A4	R	II	Jan. 11	316·20	307·99	52	19	11·43	62	·5007919	·5008130	−8	+150	−2	+340	+136	−6	·5008393	·5008400	·5008396
2	A4	D	II	12	316·46	308·28	53	21	11·28	62	7912	8122	−8	+156	−2	+340	+136	−6	8392	8398	8395
3	A5	R	I	12	403·19	391·02	51	21	11·40	56	6208	6402	−8	+151	+4	+340	+136	−6	6689	6679	6684
4	A5	D	I	12	403·51	391·32	52	16	11·33	61	6203	6397	−7	+154	−1	+340	+136	−6	6683	6673	6678
5	A6	R	I	13	430·55	416·58	50	21	10·88	60	5814	6008	−8	+173	0	+340	+136	−6	6313	6303	6308
6	A6	D	I	13	435·61	419·55	51	21	10·04	61	5746	5966	−8	+208	−1	+340	+136	−6	6279	6275	6287
																			·5007125	·5007125	·5007125

TABLE 3.—*Pendulum observations and reductions*—Continued.

AUSTIN, TEX. (CAPITOL).

Swing No.	Pendulum.	Position.	Knife-edge.	Date.	Coincidence interval. Chronometer. 1841.		Total arc. Initial.	Total arc. Final.	Temperature.	Pressure.	Period uncorrected. Chronometer. 1841.		Corrections (7th decimal place). Arc.	Temp.	Pressure.	Rate. 1841.		Flexure.	Period corrected. Chronometer. 1841.		Mean.
				1895.	*s.*	*s.*	′	′	°*C.*	*mm*	*s.*	*s.*							*s.*	*s.*	*s.*
1	A4	R	II	Apr. 29	228·59		53	19	26·14	58	·5010960		−8	−467	+2	+32		−13	·5010506		
2	A4	D	II	30	228·27		53	20	26·57	61	10976		−8	−485	−1	+32		−13	10501		
3	A5	R	I	30	270·37		52	21	27·02	59	09263		−8	−504	+1	+32		−13	08771		
4	A5	D	I	30	269·95		52	17	27·30	58	09278		−7	−516	+2	+29		−13	08773		
5	A6	R	I	May 1	281·02		51	19	27·41	61	08912		−8	−520	−1	+29		−13	08399		
6	A6	D	I	1	280·28		51	21	27·81	60	08936		−8	−537	0	+29		−13	08407		
																			·5009226		

LAREDO, TEX.

					1818.						*1818.*					*1818.*			*1818.*		
1	A4	R	II	May 10	223·34		53	10	25·97	60	·5011218		− 6	−460	0	+252		−13	·5010991		
2	A4	D	II	11	224·20		53	23	24·91	58	11176		− 9	−415	+2	+252		−13	10993		
3	A5	R	I	11	264·94		53	26	24·34	58	09454		−10	−391	+2	+252		−13	09294		
4	A5	D	I	11	266·02		53	16	23·33	58	09415		− 7	−349	+2	+288		−13	09336		
5	A6	R	I	12	279·14		53	23	21·85	60	08972		− 9	−287	0	+288		−13	08951		
6	A6	D	I	12	279·21		53	21	21·68	60	08970		− 8	−280	0	+288		−13	08957		
																			·5009754		

GALVESTON, TEX.

					1818.						*1818.*					*1818.*			*1818.*		
1	A4	R	II	May 21	235·79		53	21	22·18	62	·5010625		− 8	−301	−2	+256		−13	·5010557		
2	A4	D	II	22	237·34		55	16	21·25	60	10556		− 7	−262	0	+256		−13	10530		
3	A5	R	I	22	283·58		52	30	20·59	61	08831		−11	−234	−1	+256		−13	08828		
4	A5	D	I	22	284·46		52	21	20·34	63	08804		− 8	−224	−3	+260		−13	08816		
7	A5	D	I	23	283·61		52	19	21·35	64	08831		− 8	−266	−4	+268		−13	08808		
5	A6	R	I	23	297·13		52	17	20·56	63	08428		− 7	−233	−3	+260		−13	08432		
8	A6	R	I	24	295·65		52	20	21·73	58	08470		− 8	−282	+2	+268		−13	08437		
6	A6	D	I	23	295·66		53	22	21·15	62	08469		− 9	−258	−2	+260		−13	08447		
9	A6	D	I	24	294·85		51	23	22·13	57	08493		− 8	−299	+3	+268		−13	08444		
																			·5009268		

AUSTIN, TEX. (UNIVERSITY. PENDULUM IN PRIME VERTICAL).

					1841.						*1841.*					*1841.*			*1841.*		
1	A4	R	II	June 5	231·39		55	20	23·15	61	·5010827		−8	−342	−1	+40		−6	·5010510		
2	A4	D	II	6	232·08		53	21	22·43	60	10795		−8	−311	0	+40		−6	10510		
3	A5	R	I	6	274·50		53	21	23·38	60	09124		−8	−351	0	+40		−6	08799		
4	A5	D	I	6	275·23		52	20	22·98	58	09100		−8	−334	+2	+20		−6	08774		
5	A6	R	I	7	286·72		52	20	22·91	58	08735		−8	−331	+2	+20		−6	08412		
6	A6	D	I	7	284·68		50	22	24·02	58	08797		−8	−378	+2	+20		−6	08427		
																			·5009239		

AUSTIN, TEX. (UNIVERSITY. PENDULUM IN MERIDIAN).

					1841.						*1841.*					*1841.*			*1841.*		
1	A4	R	II	June 10	230·83		53	17	24·44	55	·5010854		−8	−396	+5	+69		−6	·5010518		
2	A4	D	II	11	231·18		56	21	24·42	61	10837		−9	−395	−1	+69		−6	10495		
3	A5	R	I	11	273·72		53	22	24·92	61	09150		−9	−416	−1	+69		−6	08787		
4	A5	D	I	11	272·58		52	19	24·72	59	09188		−8	−407	+1	+16		−6	08784		
5	A6	R	I	12	283·98		52	20	24·60	59	08819		−8	−402	+1	+16		−6	08420		
6	A6	D	I	12	283·06		53	21	25·02	59	08848		−8	−420	+1	+16		−6	08431		
																			·5009239		

TABLE 3.—*Pendulum observations and reductions*—Continued.

NEW ORLEANS, LA.

Swing No.	Pendulum.	Position.	Knife-edge.	Date.	Coincidence interval. Chronometer. 1818.		Total arc. Initial.	Total arc. Final.	Temperature.	Pressure.	Period uncorrected. Chronometer. 1818.		Corrections (7th decimal place). Arc.	Temp.	Pressure.	Rate. 1818.		Flexure.	Period corrected. Chronometer. 1818.		Mean.
				1895.	*s.*	*s.*	′	′	°*C.*	*mm*	*s.*	*s.*							*s.*	*s.*	*s.*
1	A4	R	II	July 23	237·15		55	26	25·60	62	·5010564		−10	−444	−2	+299		−13	·5010394		
2	A4	D	II	24	237·05		56	20	25·62	62	10569		− 9	−445	−2	+299		−13	10399		
3	A5	R	I	24	282·50		56	21	25·67	62	08865		− 9	−447	−2	+299		−13	08693		
4	A5	D	I	24	282·73		53	43	25·37	62	08858		−15	−435	−2	+295		−13	08688		
9	A5	D	I	26	282·80		56	22	25·62	64	08856		− 9	−445	−4	+299		−13	08684		
5	A6	R	I	25	294·76		51	16	25·54	64	08496		− 7	−442	−4	+295		−13	08325		
8	A6	R	I	26	295·48		53	20	25·24	63	08475		− 8	−429	−3	+299		−13	08321		
6	A6	D	I	25	294·60		51	21	25·64	60	08500		− 8	−446	0	+295		−13	08328		
7	A6	D	I	25	296·15		53	19	25·27	60	08456		− 8	−431	0	+299		−13	08303		
																			·5009135		

WASHINGTON, D. C.

					1818.	*1771.*					*1818.*	*1771.*				*1818.*	*1771.*		*1818.*	*1771.*	
1	A4	R	II	Aug. 2	298·73	299·66	55	20	20·72	60	·5008383	·5008356	−9	−240	0	+261	+262	−6	·5008389	·5008363	·5008376
2	A4	D	II	3	298·31	299·12	57	20	20·76	64	8395	8372	−9	−241	−4	+261	+262	−6	8396	8374	8385
3	A5	R	I	3	375·00	375·36	53	23	21·02	61	6676	6669	−9	−252	−1	+261	+262	−6	6669	6663	6666
4	A5	D	I	3	375·65	374·82	53	19	21·19	63	6664	6679	−8	−259	−3	+261	+262	−6	6649	6665	6657
5	A6	R	I	4	396·34	395·15	53	19	21·34	60	6316	6335	−8	−266	0	+261	+262	−6	6297	6317	6307
6	A6	D	I	4	394·71	394·46	53	22	21·58	62	6342	6346	−9	−276	−2	+261	+262	−6	6310	6315	6312
																			·5007118	·5007116	·5007117

CALAIS, ME.

					1829.						*1829.*					*1829.*			*1829.*		
1	A4	R	II	Aug. 21	360·81		56	17	15·21	64	·5006938		−8	− 9	−4	+155		−13	·5007059		
2	A4	D	II	22	361·63		56	22	14·81	64	6923		−9	+ 8	−4	+155		−13	7060		
3	A5	R	I	22	478·07		53	21	15·26	64	5235		−8	−11	−4	+155		−13	5354		
4	A5	D	I	22	480·59		56	21	15·06	62	5207		−9	− 3	−2	+147		−13	5327		
5	A6	R	I	23	515·77		52	20	15·08	61	4852		−8	− 3	−1	+147		−13	4974		
6	A6	D	I	23	510·89		52	20	15·66	61	4898		−8	−28	−1	+147		−13	4995		
																			·5005795		

WASHINGTON, D. C.

					1836.	*1841.*					*1836.*	*1841.*				*1836.*	*1841.*		*1836.*	*1841.*	
1	A4	R	II	Jan. 21	302·57	311·75	53	21	10·01	58	·5008277	·5008032	−8	+209	+2	−84	+149	−6	·5008390	·5008378	·5008384
2	A4	D	II	22	302·46	311·33	55	21	10·04	64	8279	8043	−9	+208	−4	−84	+149	−6	8384	8381	8382
3	A5	R	I	22	381·57	395·38	55	23	10·34	54	6561	6331	−9	+195	+6	−84	+149	−6	6663	6666	6664
4	A5	D	I	22	381·51	396·19	53	21	10·36	57	6562	6318	−8	+194	+3	−84	+149	−6	6661	6650	6656
9	A5	D	I	24	377·28	390·18	52	21	11·56	62	6635	6415	−8	+145	−2	−84	+149	−6	6680	6693	6686
5	A6	R	I	23	403·73	419·35	51	20	10·40	58	6200	5969	−8	+193	+2	−84	+149	−6	6297	6299	6298
8	A6	R	I	24	399·73	414·81	52	21	11·13	59	6262	6034	−8	+162	+1	−84	+149	−6	6327	6332	6330
6	A6	D	I	23	401·84	417·48	51	21	10·66	61	6229	5995	−8	+182	−1	−84	+149	−6	6312	6311	6312
7	A6	D	I	23	400·93	416·45	53	19	10·83	61	6243	6010	−8	+175	−1	−84	+149	−6	6319	6319	6319
																			·5007122	·5007121	·5007122

KEY WEST, FLA.

					1828.						*1828.*					*1828.*			*1828.*		
1	A4	R	II	Feb. 8	214·36		53	17	22·55	60	·5011690		−7	−317	0	−16		−13	·5011337		
2	A4	D	II	9	216·14		56	20	21·01	61	11593		−9	−252	−1	−16		−13	11302		
3	A5	R	I	9	254·43		53	23	20·02	61	09845		−9	−210	−1	−16		−13	09596		
4	A5	D	I	9	254·66		53	17	19·54	61	09836		−8	−190	−1	−51		−13	09573		
5	A6	R	I	10	264·37		52	22	19·44	61	09475		−8	−186	−1	−51		−13	09216		
6	A6	D	I	10	263·92		53	21	19·39	59	09491		−8	−184	+1	−51		−13	09236		
																			·5010043		

TABLE 3.—*Pendulum observations and reductions*—Continued.

CHARLESTON, S. C.

Swing No.	Pendulum.	Position.	Knife-edge.	Date.	Coincidence interval. Chronometer. 1841.		Total arc. Initial.	Total arc. Final.	Temperature.	Pressure.	Period uncorrected. Chronometer. 1841.		Corrections (7th decimal place). Arc.	Temp.	Pressure.	Rate. 1841.		Flexure.	Period corrected. Chronometer. 1841.		Mean.
				1895.	*s.*	*s.*	′	′	°*C.*	*mm*	*s.*	*s.*							*s.*	*s.*	*s.*
1	A4	R	II	Feb. 25	261·75		53	19	12·03	53	·5009569		−8	+125	+7	+139		−13	·5009819		
2	A4	D	II	26	262·26		56	21	11·00	62	9550		−9	+168	−2	+139		−13	9833		
3	A5	R	I	26	317·02		52	22	12·18	63	7898		−8	+118	−3	+139		−13	8131		
4	A5	D	I	26	317·86		52	16	12·55	60	7877		−7	+103	0	+158		−13	8118		
5	A6	R	I	27	333·64		53	21	12·57	65	7505		−8	+102	−5	+158		−13	7739		
6	A6	D	I	27	330·95		52	20	13·39	62	7565		−8	+ 67	−2	+158		−13	7767		
																			·5008568		

ATLANTA, GA.

					1841.						*1841.*					*1841.*			*1841.*		
1	A4	R	II	Mar. 7	256·08		53	17	14·58	61	·5009781		− 8	+18	−1	+114		−13	·5009891		
2	A4	D	II	8	256·87		55	19	13·85	62	9751		− 9	+48	−2	+114		−13	9889		
3	A5	R	I	8	311·26		55	24	14·08	60	8044		−10	+39	0	+114		−13	8174		
4	A5	D	I	8	312·35		53	17	13·49	62	8017		− 8	+63	− 2	+110		−13	8167		
5	A6	R	I	9	327·05		52	19	13·72	62	7656		− 8	+54	−2	+110		−13	7797		
6	A6	D	I	9	323·16		53	22	15·01	61	7748		− 9	0	−1	+110		−13	7835		
																			·5008625		

LITTLE ROCK, ARK.

					1828.						*1828.*					*1828.*			*1828.*		
1	A4	R	II	Apr. 4	257·09		52	17	22·21	62	·5009743		−7	−302	−2	−17		−13	·5009402		
2	A4	D	II	5	258·85		53	17	21·13	66	9677		−7	−257	−6	−17		−13	9377		
3	A5	R	I	5	309·25		52	21	24·10	55	8097		−8	−381	+5	−17		−13	7683		
4	A5	D	I	5	310·10		52	19	24·42	55	8075		−8	−395	+5	−12		−13	7652		
5	A6	R	I	6	323·13		52	20	24·97	56	7749		−8	−418	+4	−12		−13	7302		
6	A6	D	I	6	323·27		52	23	24·52	57	7745		−9	−399	+3	−12		−13	7315		
																			·5008122		

WASHINGTON, D. C.

					1829.						*1829.*					*1829.*			*1829.*		
1	A4	R	II	June 22	292·86		53	20	22·63	58	·5008551		−8	−320	+2	+171		−6	·5008390		
11	A4	R	II	26	294·67		56	21	21·41	61	8498		−9	−268	−1	+171		−6	8385		
2	A4	D	II	23	292·50		55	20	22·65	60	8562		−9	−321	0	+171		−6	8397		
12	A4	D	II	26	294·49		55	21	21·38	58	8504		−9	−267	+2	+171		−6	8395		
3	A5	R	I	23	366·29		53	21	22·78	61	6834		−8	−326	−1	+171		−6	6664		
10	A5	R	I	25	369·26		55	19	21·55	58	6779		−9	−274	+2	+171		−6	6663		
4	A5	D	I	23	366·23		52	19	22·53	60	6836		−8	−316	0	+171		−6	6677		
9	A5	D	I	25	369·21		53	21	21·75	59	6780		−8	−283	+1	+171		−6	6655		
5	A6	R	I	24	387·24		52	20	22·33	61	6464		−8	−307	−1	+171		−6	6313		
8	A6	R	I	25	389·63		53	20	21·83	59	6424		−8	−286	+1	+171		−6	6296		
6	A6	D	I	24	387·96		52	21	22·18	57	6452		−8	−301	+3	+171		−6	6311		
7	A6	D	I	24	389·00		53	19	21·98	60	6435		−8	−292	0	+171		−6	6300		
																			·5007121		

TABLE 3.—*Pendulum observations and reductions*—Continued.

SYDNEY, CAPE BRETON.

Swing No.	Pendulum.	Position.	Knife-edge.	Date.	Coincidence interval. Chronometer. 1842.	Coincidence interval. Chronometer. 1823.	Total arc. Initial.	Total arc. Final.	Temperature.	Pressure.	Period uncorrected. Chronometer. 1842.	Period uncorrected. Chronometer. 1823.	Corrections (7th decimal place). Arc.	Temp.	Pressure.	Rate. 1842.	Rate. 1823.	Flexure.	Period corrected. Chronometer. 1842.	Period corrected. Chronometer. 1823.	Mean.
				1895.	s.	s.	′	′	°C.	mm	s.	s.				1842.	1823.		s.	s.	s.
1	A4	R	II	July 11	372·26	365·65	53	20	17·81	60	·4993293	·5006846	−8	−117*	0	+13654	+92	−10	·5006812	·5006802	·5006807
2	A4	D	II	11	372·06	366·12	55	22	17·75	60	3290	6838	−9	−115	0	+13654	+92	−10	6810	6796	6803
3	A5	R	I	11	296·20	486·06	52	20	17·90	63	1574	5149	−8	−121	−3	+13649	+92	−10	5081	5099	5090
4	A5	D	I	11	295·09	490·75	52	20	17·57	62	1543	5099	−8	−107*	−2	+13656	+96	−10	5071	5067	5069
5	A6	R	I	12	282·95	528·52	52	20	17·50	62	1181	4735	−8	−104*	−2	+13655	+96	−10	4711	4706	4708
6	A6	D	I	12	283·62	525·17	52	19	18·10	58	1201	4765	−8	−129	+2	+13655	+96	−10	4711	4715	4713
																			·5005533	·5005531	·5005532

ASHE INLET, HUDSON STRAIT.

					1842.	177.					1842.	177.				1842.	177.		1842.	177.	
1	A4	R	II	July 25	229·49	226·45	53	19	4·71	60	·4989129	·4988984	−8	+430	0	+13719	+13906	−6	·5003262	·5003304	·5003283
2	A5	R	I	26	198·49	195·57	53	19	4·87	69	7436	7249	−8	+423	−9	+13715	+13902	−6	1551	1551	1551
3	A6	R	I	26	192·30	189·92	53	19	4·75	62	7033	6871	−8	+428	−2	+13714	+13901	−6	1159	1184	1172
																			·5001991	·5002012	·5002002

UMANAK, GREENLAND.

					1842.	177.					1842.	177.				1842.	177.		1842.	177.	
1	A4	R	II	Aug. 9	209·36	207·07	53	19	10·83	61	·4988087	·4987957	−8	+174	−1	+13743	+13936	−13	·5001982	·5002045	·5002014
7	A4	R	II	11	209·48	206·19	53	21	10·15	64	8094	7904	−8	+203	−4	+13743	+13936	−13	2015	2018	2016
2	A4	D	II	9	211·47	207·99	53	17	11·71	62	8206	8009	−7	+137	−2	+13743	+13936	−13	2064	2060	2062
8	A4	D	II	11	210·55	206·49	53	19	10·72	59	8155	7922	−8	+179	+1	+13743	+13936	−13	2057	2017	2037
3	A5	R	I	9	185·13	182·58	53	20	12·41	62	6532	6345	−8	+108	−2	+13738	+13931	−13	0355	0361	0358
9	A5	R	I	11	184·77	181·58	53	22	11·73	60	6506	6270	−9	+136	0	+13738	+13931	−13	0358	0315	0336
4	A5	D	I	10	184·49	181·85	51	19	11·66	66	6485	6290	−8	+139	−6	+13738	+13931	−13	0335	0333	0334
10	A5	D	I	12	183·76	180·78	51	20	10·86	57	6432	6209	−8	+173	+3	+13741	+13935	−13	0328	0299	0314
5	A6	R	I	10	178·54	176·16	52	19	10·70	66	6037	5849	−8	+180	−6	+13737	+13930	−13	·4999927	·4999932	·4999930
11	A6	R	I	12	178·49	176·29	53	19	10·87	62	6033	5859	−8	+174	−2	+13740	+13934	−13	9924	9944	9934
6	A6	D	I	10	178·40	176·18	55	23	10·57	58	6026	5850	−9	+185	+2	+13737	+13930	−13	9928	9945	9936
12	A6	D	I	12	178·85	176·77	53	21	11·62	56	6061	5897	−8	+141	+4	+13740	+13934	−13	9925	9955	9940
																			·5000766	·5000769	·5000768

NIANTILIK HARBOR, CUMBERLAND SOUND.

					1842.						1842.					1842.			1842.		
1	A4	R	II	Sept. 17	218·61		53	21	2·01	63	·4988590		− 8	+542	−3	+13 734		−6	·5002849		
2	A5	R	I	18	189·09		53	30	1·22	64	6813		−11	+575	−4	+13 729		−6	1096		
3	A6	R	I	18	185·33		52	31	2·58	62	6547		−11	+518	−2	+13 728		−6	0774		
																			·5001573		

WASHINGTON, D.C.

					1823.	1824.					1823.	1824.				1823.	1824.		1823.	1824.	
1	A4	R	II	Oct. 15	299·65	297·69	53	21	16·41	60	·5008357	·5008412	− 8	−59	0	+101	+48	−6	·5008385	·5008387	·5008386
2	A4	D	II	16	298·89	297·06	53	21	16·63	59	8378	8430	− 8	−68	+1	+101	+48	−6	8398	8397	8398
3	A5	R	I	16	375·33	372·48	53	19	16·93	58	6670	6721	− 8	−81	+2	+101	+48	−6	6678	6676	6677
4	A5	D	I	16	376·11	372·95	52	20	16·97	60	6656	6712	− 8	−83	0	+ 93	+39	−6	6652	6654	6653
5	A6	R	I	17	396·87	393·84	51	19	17·03	60	6307	6356	− 8	−85	0	+ 93	+39	−6	6301	6296	6298
6	A6	D	I	17	396·02	392·62	53	27	17·15	60	6321	6376	−11	−90	0	+ 93	+39	−6	6307	6308	6308
																			·5007120	·5007120	·5007120

*In these cases the temperature correction with chronometer 1823 is one unit (7th decimal place) larger than that given.

TABLE 4.—*Summary of corrected periods.*

Station.	Date.	Periods.				Differences from mean (7th decimal place).		
		Pendulum A4, knife-edge II.	Pendulum A5, knife-edge I.	Pendulum A6, knife-edge I.	Mean of three pendulums.	A4.	A5.	A6.
	1895.	s.	s.	s.	s.			
Washington	Jan. 11–Jan. 13	·5008396	·5006681	·5006298	·5007125	1271	444	827
Austin (capitol)	Apr. 29–May 1	10504	8772	8403	09226	1278	454	823
Laredo	May 10–May 12	10992	9315	8954	09754	1238	439	800
Galveston	May 21–May 24	10544	8820	8440	09268	1276	448	828
Austin University, prime vertical	June 5–June 7	10510	8786	8420	09239	1271	453	819
Austin University, meridian	June 10–June 12	10506	8786	8426	09239	1267	453	813
New Orleans	July 23–July 25	10396	8690	8319	09135	1261	445	816
Washington	Aug. 2–Aug. 4	08380	6662	6310	07117	1263	455	807
Calais	Aug. 21–Aug. 23	07060	5340	4984	05795	1265	455	811
	1896.							
Washington	Jan. 21–Jan. 24	08383	6668	6315	07122	1261	454	807
Key West	Feb. 8–Feb. 10	11320	9584	9226	10043	1277	459	817
Charleston	Feb. 25–Feb. 27	09826	8124	7753	08568	1258	444	815
Atlanta	Mar. 7–Mar. 9	09890	8170	7816	08625	1265	455	809
Little Rock	Apr. 4–Apr. 6	09390	7668	7308	08122	1268	454	814
Washington	June 22–June 24	08392	6665	6305	07121	1271	456	816
Sydney	July 11–July 12	06805	5080	4710	05532	1273	452	822
Ashe Inlet	July 25–July 26	03283	1551	1172	02002	1281	451	830
Umanak	Aug. 9–Aug. 12	02032	0336	·4999935	00768	1264	432	833
Niantilik	Sept. 17–Sept. 18	02849	1096	·5000774	01573	1276	477	799
Washington	Oct. 15–Oct. 17	08392	6665	6303	07120	1272	455	817

TABLE 5.—*Values of g computed from each pendulum.*

Station.	*g* in dynes or centimetres.				Differences from mean (3d decimal place).		
	Pendulum A4.	Pendulum A5.	Pendulum A6.	Mean of three pendulums.	A4.	A5.	A6.
1. Washington (Coast and Geodetic Survey)				[980·098]			
2. Austin (capitol)	979·270	979·276	979·276	979·274	—·004	+·002	+·002
3. Laredo	979·086	979·064	979·061	979·068	— 12	+ 4	+ 7
4. Galveston	979·255	979·258	979·262	979·258	+ 3	0	— 4
5. Austin (University)	979·269	979·271	979·268	979·269	0	— 2	+ 1
6. New Orleans	979·312	979·309	979·309	979·310	— 2	+ 1	+ 1
7. Calais	980·615	980·617	980·618	980·617	+ 2	0	— 1
8. Key West	978·952	978·957	978·958	978·956	+ 4	— 1	— 2
9. Charleston	979·535	979·527	979·534	979·532	— 3	+ 5	— 2
10. Atlanta	979·511	979·509	979·509	979·510	— 1	+ 1	+ 1
11. Little Rock	979·706	979·706	979·708	979·707	+ 1	+ 1	— 1
12. Sydney	980·720	980·719	980·722	980·720	0	+ 1	— 2
13. Ashe Inlet	982·101	982·104	982·110	982·105	+ 4	+ 1	— 5
14. Umanak	982·592	982·581	982·597	982·590	— 2	+ 9	— 7
15. Niantilik	982·271	982·282	982·267	982·273	+ 2	— 9	+ 6

In table 6 is given a general summary of the results, with geographical positions and elevations of stations, estimated surface densities,[1] reduction to sea level, and comparison with the

[1]The surface densities have been taken from the following statement furnished by Mr. G. K. Gilbert, geologist, United States Geological Survey: "Memorandum on specific gravity of rocks underlying certain gravity stations." In the preparation of this memorandum no attempt has been made to examine and weigh samples of rock from the various localities, but general descriptions of the rocks have been obtained from various colleagues acquainted

same theoretical formula as before (see p. 24, App. 1, Report for 1894). The reduction to sea level was made by two methods, as in the last report of the International Geodetic Association,[2] first, using Bouguer's formula, and second, omitting the attraction term in this formula. In the columns of residuals + indicates an excess in the observed value of gravity and — a defect. The greater part of these stations are near the coast and at small elevations above the sea, so that the direct reduction to sea level is of minor importance. They are not so situated as to give much evidence on the question of the introduction of other methods of reduction to sea level, such as were referred to in discussing the work of 1894.[3]

TABLE 6.—*Summary of gravity results, with reduction to sea level, and comparison with theoretical formula.*

[Results for g expressed in dynes or centimetres.]

No.	Station.	Latitude north.	Longitude west of Greenwich.	Elevation H.	Surface density δ.	g observed.	Reductions to sea level.			g reduced to sea level.		Theoretical value computed g_0.	Residuals.	
							Elevation $\frac{H}{2g/\gamma}$	Attraction $\frac{H_3\delta}{2g/\gamma 4\Delta}$	Topographical correction.	Bouguer's formula g_1.	Attraction term omitted g_2.		g_1-g_0	g_2-g_0
	Northern coasts.	° ′ ″	° ′ ″	*m.*										
14	Umanak, Greenland	70 40 29	52 08 21	10	2·6	982·590	+ ·003	− ·001	+ ·002	982·594	982·595	982·632	− ·038	− ·037
15	Niantilik, Cumberland Sound	64 53 30	66 19 32	7	2·6	*982·273	+ ·002	− ·001	+ ·001	982·275	982·276	982·271	+ ·004	+ ·005
13	Ashe Inlet, Hudson Strait	62 32 48	70 35 20	15	2·6	*982·105	+ ·005	− ·002	− ·001	982·109	982·111	982·104	+ ·005	+ ·007
12	Sydney, Cape Breton	46 08 32	60 11 47	11	2·35	980·720	+ ·003	− ·001	·000	980·722	980·723	980·732	− ·010	− ·009
7	Calais, Me.	45 11 11	67 16 54	38	2·6	980·617	+ ·012	− ·004	·000	980·625	980·629	980·647	− ·022	− ·018
	Atlantic and Gulf coasts.													
1	Washington, D. C. (C. & G. S.)	38 53 13	77 00 32	14	2·3	980·098	+ ·004	− ·001	·000	980·101	980·102	980·087	+ ·014	+ ·015
9	Charleston, S. C.	32 47 14	79 56 03	6	2·3	979·532	+ ·002	− ·001	·000	979·533	979·534	979·570	− ·037	− ·036
8	Key West, Fla.	24 33 33	81 48 25	1	2·6	978·956	·000	·000	·000	978·956	978·956	978·952	+ ·004	+ ·004
6	New Orleans, La.	29 56 58	90 04 14	2	2·3	979·310	+ ·001	·000	·000	979·311	979·311	979·344	− ·033	− ·033
4	Galveston, Tex.	29 18 12	94 47 29	3	2·3	979·258	+ ·001	·000	·000	979·259	979·259	979·294	− ·035	− ·035
	Interior stations.													
10	Atlanta, Ga.	33 44 58	84 23 18	324	2·6	979·510	+ ·100	− ·035	·000	979·575	979·610	979·649	− ·074	− ·039
11	Little Rock, Ark.	34 44 57	92 16 24	89	2·4	979·707	+ ·027	− ·009	·000	979·725	979·734	979·732	− ·007	+ ·002
5	Austin, Tex. (University)	30 17 11	97 44 14	189	2·5	979·269	+ ·058	− ·020	.000	979·307	979·327	979·370	− ·063	− ·043
2	Austin, Tex. (Capitol)	30 16 30	97 44 16	170	2·5	979·274	+ ·052	− ·018	·000	979·308	979·326	979·369	− ·061	− ·043
3	Laredo, Tex.	27 30 29	99 31 12	129	2·35	979·068	+ ·040	− ·013	·000	979·095	979·108	979·160	− ·065	− ·052

*Approximate results only.

with the localities, and the specific gravities have been inferred from the apparent similarity of such rocks to rocks of known density.

Locality.	Character of rock.	Density.
Austin, Texas	Chalky limestone, solid limestone	2·5
Laredo, Texas	Sandy shale	2·35
Galveston, Texas	Unconsolidated sediments	2·3
New Orleans, La.	Unconsolidated sediments	2·3
Calais, Maine	Granite	2·6
Key West, Fla.	Limestone	2·6
Charleston, S. C.	Unconsolidated sediments	2·3
Atlanta, Ga.	Gneiss and intrusives	2·6
Little Rock, Ark.	Shale	2·4
Sydney, Cape Breton	Sandstone, shale	2·35
Ashe Inlet, Hudson Strait	Gneiss	2·6
Umanak, Greenland	Gneiss	2·6
Niantilik, Cumberland Sound	Gneiss	2·6

[2] Bericht uber die relativen Messungen der Schwerkraft mit Pendelapparaten von Professor Helmert. Verhandlungen der elften allgemeinen Conferenz der Internationalen Erdmessung, Berlin, 1895.

[3] For some general considerations in connection with a part of these gravity results see paper Results of Recent Pendulum Observations, American Journal of Science, Vol. I, March, 1896, p. 186.

Comparison of periods at Washington.—A comparative table of the periods of this set of pendulums as determined at different times at Washington was given on page 19, Appendix 1, Report for 1894. This comparison may now be extended as the same pendulums have been swung at Washington five times in 1895 and 1896, using similar methods. To compare the results, however, two corrections must be applied to the periods for 1894 and January, 1895, as already published. To allow for the fact that in the later work pendulum A4 was swung on knife-edge II instead of I (as in 1894) $0^s{\cdot}0000013$ must be subtracted from the period of A4 as previously given. To allow for the change in zero point of thermometer 6604 (referred to under "Instruments"), assuming that this change took place previous to 1894 (the first determination of the thermometer corrections being four years previous) $+0^s{\cdot}0000003$ must be added to the periods of all three pendulums as previously given. Applying these corrections to the 1894 determinations the results are collected in table 7. These show a total range in the mean period of the three pendulums of $0^s{\cdot}0000008$, and a range in the yearly means of only $0^s{\cdot}0000001$. When it is considered that these pendulums during the interval of two and one-half years covered, have been swung at fifty stations (including Washington) and have been transported many thousand miles by rail and ship, the permanency of period is certainly satisfactory. Whether this constancy of the pendulums can be ascribed to the reversed position of knife-edge and plane adopted in this apparatus there is little evidence to determine, as there are no series of observations with the other form of pendulum corresponding either in length of service or in the method of eliminating irregularities in the chronometer rates. These results further indicate that if variations in the force of gravity at any one locality are looked for, the experimental work must be on such a plan as to accurately develop minute differences in period.

TABLE 7.—*Summary of periods at Washington.*

No.	Date.	Approximate average temperature.	Corrected periods.				Differences from mean (7th decimal place).		
			Pendulum A4.	Pendulum A5.	Pendulum A6.	Mean of three pendulums.	A4.	A5.	A6.
	1894.	°C.	s.	s.	s.	s.			
1	Apr. 25–Apr. 27	16	·5008396	·5006665	·5006303	·5007122	1274	457	819
2	May 10–May 12	19	8394	6669	6307	7123	1271	454	816
3	May 31–June 2	17	8398	6667	6305	7123	1275	456	818
4	June 23–June 25	23	8398	6665	6305	7123	1275	458	818
5	Oct. 31–Nov. 2	17	8390	6659	6309	7120	1270	461	811
	Means for 1894		8395	6665	6306	7122			
	1895.								
6	Jan. 11–Jan. 13	11	8396	6681	6298	7125	1271	444	827
7	Aug. 2–Aug. 4	21	8380	6662	6310	7117	1263	455	807
	Means for 1895		8388	6672	6304	7121			
	1896.								
8	Jan. 21–Jan. 23	11	8383	6668	6315	7122	1261	454	807
9	June 22–June 24	22	8392	6665	6305	7121	1271	456	816
10	Oct. 15–Oct. 17	17	8392	6665	6303	7120	1272	455	817
	Means for 1896		8389	6666	6308	7121			

Check determinations at Austin.—At Austin, Tex., three independent determinations of the periods of the pendulums were made, opportunity to do this being afforded by the fact that Austin was used as one end of several of the longitude determinations on which the writer was engaged. On April 29 to May 1, 1895, the pendulums were swung in the basement of the granite capitol of the State of Texas. The apparatus was then taken to Laredo and Galveston, and brought back to Austin again, where on June 5 to 7 observations were made in the basement of the State

University, the pendulums being swung in an east and west plane. On June 10 to 12 they were again swung in the same location at the State University, but in a north and south plane. To compare the observations at Austin allowance must be made for the fact that the location at the University was 19 metres higher than, and 41 seconds of latitude north of, that at the capitol. To reduce to the university the correction to the periods at the capitol is $+0^s.0000008$, being $+0^s.0000010$ for elevation and $-0^s.0000002$ for latitude. Applying this correction to the periods at the capitol the observations give the following corrected periods:

Station.	1895.	A4	A5.	A6.	Mean of three pendulums.
		s.	*s.*	*s.*	*s.*
Capitol (reduced to university)	Apr. 29–May 1	·5010512	·5008780	·5008411	·5009234
University, prime vertical	June 5–June 7	10510	8786	8420	9239
University, meridian	June 10–June 12	10506	8786	8426	9239

A comparison of the results indicates, as was anticipated, practically no difference in the periods of the pendulums due to the direction of the plane of oscillation. They further show a difference of only the millionth part in the independent determinations made at Austin at different times and in different places.

Blank page retained for pagination

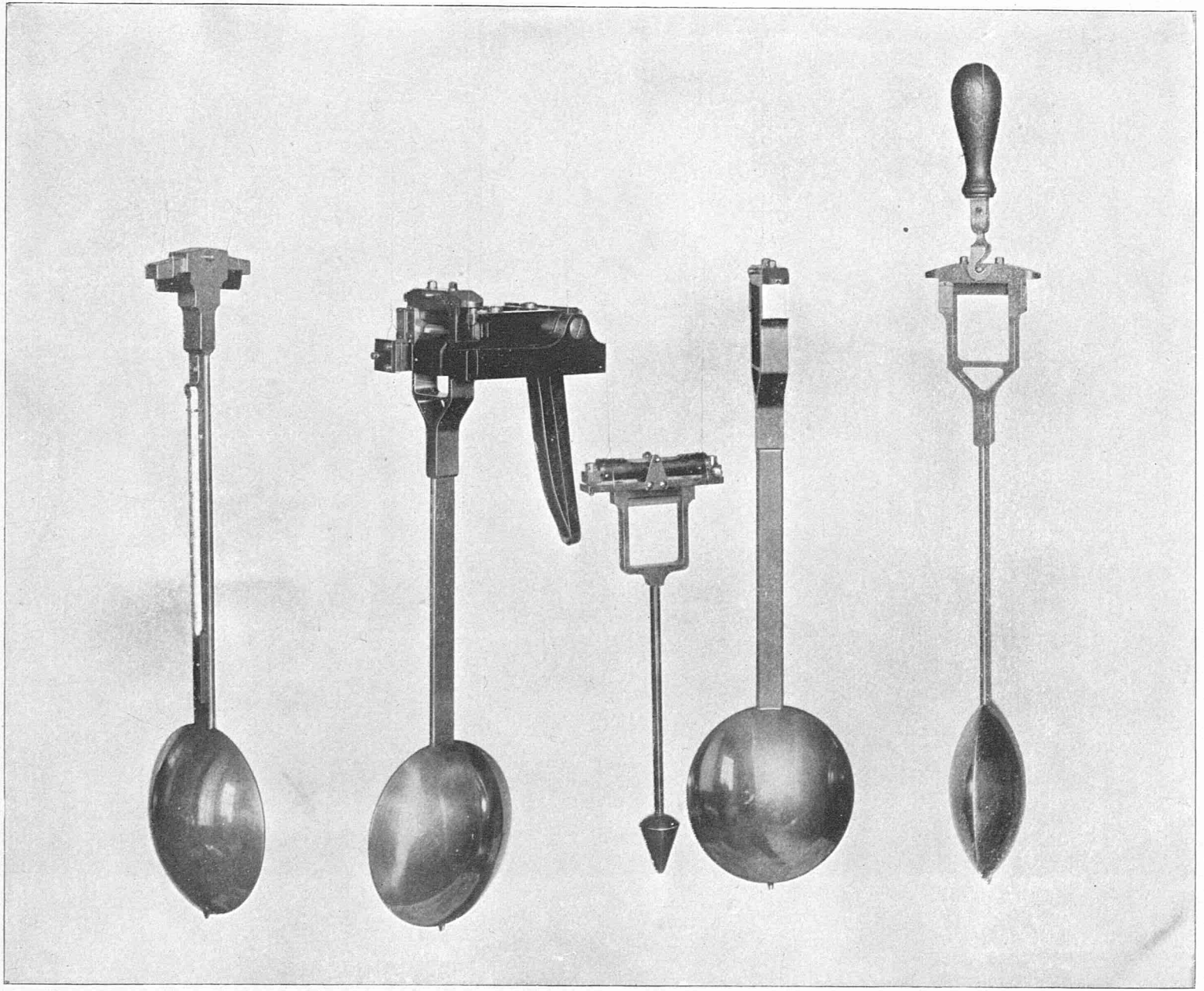

PENDULUMS.

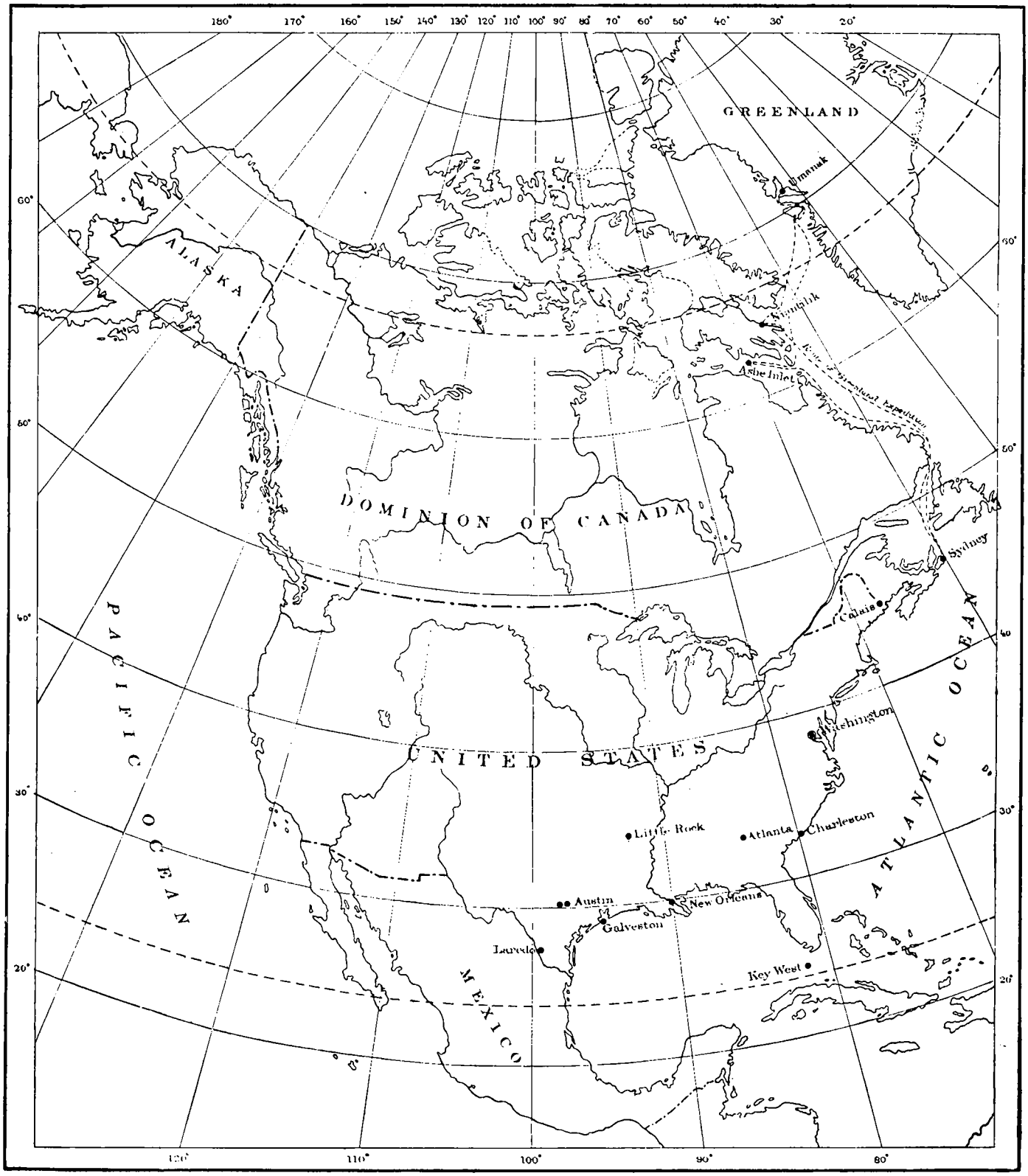

PENDULUM STATIONS 1895-'96

APPENDIX NO. 7—1897.

NOTES RELATING TO SELF-REGISTERING TIDE GAUGES AS USED BY THE U. S. COAST AND GEODETIC SURVEY.

By J. F. PRATT, Assistant.

Blank page retained for pagination

APPENDIX NO. 7—1897.

NOTES RELATING TO SELF-REGISTERING TIDE GAUGES AS USED BY THE UNITED STATES COAST AND GEODETIC SURVEY.

By J. F. PRATT, Assistant.

The first self-registering device used by this service, and undoubtedly the first used in America, for continuously and automatically recording the exact time and actual rise and fall of the surface of water caused by the various tidal movements at its locality, was used at Governors Island in New York bay and harbor during a portion of the year 1844, being kept in operation during the winter of 1844–45. The report for the latter year states that it worked "moderately well," but adds that "the mechanical execution of the screw, upon which the working of the machine depends, was not sufficiently perfect for this purpose and has caused some stoppages in the apparatus," and concludes, "a self-registering gauge devised by Mr. Saxton, of the office of weights and measures, seemed so much more perfect than this that it was determined to make trial of it before causing other gauges to be constructed."

This second, or "Saxton," gauge was evidently adopted and used in 1845, and its use continued as the gauge of this service for forty-five years. It is fully described and illustrated in Appendix No. 38, Report for 1853. The accompanying illustration, made from one of the later ones constructed, shows its general appearance. During this long period of service very few changes in form of construction were made. The earlier ones were largely made of wood, whereas in the later ones metal was substituted where practicable, the most essential change being made about 1877, when patent-lever escapements supplanted the seconds pendulums of the clocks, as the latter proved troublesome when the gauges had to be used on exposed wharves that had much vibration.

Briefly, the "Saxton" gauge operates as follows:

Two movements are provided for, the first being a uniform movement in proportion to the time, and the second a movement at right angles to the former and strictly proportioned to the rise and fall of the water at its particular locality, the resultant of these two movements producing a continuous curve on a sheet about 13 inches wide and of sufficient length to last about a month.

For the first movement a clock is connected, by an adjustable clutch, with a cylinder, over which the continuous paper passes; this cylinder, thus driven by the clock, revolves uniformly once in twelve hours; projecting from the surface of this cylinder, and near each of its extremities, is a row of 24 equidistant sharp points, which puncture the edges of the continuous sheet with dots representing half-hour intervals. These points, by means of the adjustable clutch, are made to correspond to the hands on the face of the clock and serve to propel the paper along at the same rate that they are moving, unwinding it from the supply roller and allowing it to be wound upon the receiving roller, a tension on the former being caused by its winding up, on a spool attached to one of its ends, a cord to which a small weight is suspended, and on the latter roller, by another cord to which a somewhat heavier weight is attached, unwinding from a similar spool. This latter weight serves not only for tension, but also to wind the paper up as the time cylinder relieves it.

For the second movement a copper float, hermetically sealed, is allowed to freely float in a vertical box or tube whose inner diameter is somewhat larger than the diameter of the float, and which has a controllable inflow and outflow at its bottom, to prevent undue motion of the float caused by waves. To the top of the float is attached a copper wire leading up through the float box or well, and wound up on or unwound from the large receiving wheel, a sufficient tension to this wire being maintained by a counterweight acting on a smaller wheel fixed to the receiving wheel shaft. On the receiving wheel shaft a small cylinder is fixed, and the scale in height of the record or curve is the relation between the circumference of this small cylindrical wheel and that of receiving wheel. This proportion is so made as to cause the record curve to fall between the two marginal lines of dots. By providing each gauge with several of these cylinders of different sizes, each to a specific scale, the same gauge can be used in successive localities where the amount of rise and fall may differ very materially. A fine chain or wire, attached to and winding on the small cylinder, leads vertically to a small pulley, over which it is deflected to a horizontal position and attached to the pencil carrier which is so constructed that it can move back and forth along a guide transversely to the lines of dots. A cord leads horizontally from the opposite side of the pencil carrier and passes over a second and opposite deflecting pulley to a pencil counterweight. As the tide rises the float wire is wound up on the receiving wheel by its counterweight, which at the same time unwinds the fine wire from the small cylinder, thus permitting the pencil counterweight to draw the pencil a distance proportional to the actual rise of the float. When the tide falls the foregoing movements are reversed.

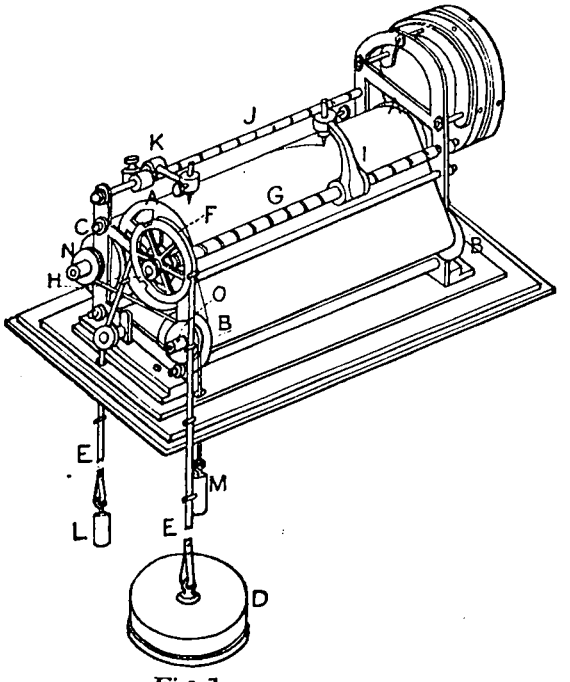

Fig. 1

In 1890, after a trial of about four years of a sample one, a tide gauge designed by Mr. A. Stierle, assistant, United States Engineer Corps, was adopted, principally on account of its being more compact and portable, its record being identical with that of the "Saxton" gauge. It is described by Mr. Stierle as follows:

The principles of the gauge are not new. With a plain eight-day marine clock ("Seth Thomas") is connected, by a clutch, a light brass drum or cylinder, A, around which the recording sheets are laid, over which the continuous paper passes, as one or the other, respectively, is used. This cylinder revolves twice in twenty-four hours, or only once, if so ordered, and is provided upon its surface with two rows of needle points, each row (of twelve points) being near one end of the cylinder, which puncture the paper and thus mark the time abscissas, either of one or twohours' duration. The cylinder can be lifted out of the frame after the clutch connecting it with the clock has been moved back.

The variations of the water level are transmitted directly by a copper float, D, and a thin brass band, E, upon the periphery of a deeply grooved wheel, F, exactly 1 foot in circumference, whose projecting double flange shows three cycloidal notches which extend to the bottom of the grooved rim. The rectilinear distance between these notches is 4 inches, and corresponds with the distance between the small crossbars riveted upon the float band E. The wheel F fits loosely upon the end of the screw G, made of phosphor-bronze, but can be jammed with the nut H. The screw G itself sets loosely between the framework, and, together with the wheel F, revolves as the float D rises or falls, and thereby causes the pencil holder I, which with its threaded core embraces the screw, to move right or left at the rate of 1 inch for every foot the float ascends or descends with the rise or fall of the water level.

By a combination of a few parts closely connected a constant record of the height of a water level is thus transmitted and reduced upon the recording paper with great accuracy, an accuracy which under all conditions remains the same and is measurable if the constants are first determined relative to the changes in the floating line or line of submergence on the float at different stages of water, and those relating to the exact length of the float band E, the circumference of the wheel F, and the pitch of the screw G. The play or "backlash" of the mechanism when in motion is very small and can be accurately measured.

It may be added here that the scale of reduction as projected upon the recording sheets may be made of any

proportion by changing the pitch of the screw G or the diameter of the band wheel F, and that the gauge can be provided with any number of screws or band wheels corresponding to various scales.

On the rear of the frame, and upon the same horizontal plane with the screw G, a graduated rod, J, is placed, upon which is clamped the pencil holder K, for the so-called stationary pencil. This pencil traces upon the recording sheet any assumed or established reference or base line, usually the zero of a tide staff, from which the ordinates of a curve representing the water level can be readily measured. The copper float D rises and falls with the water level in a square box, the interior clear area of which is about 1½ inches larger in width than the diameter of the float, its length being such as to reach about 1 foot below the lowest known water level of the locality and about 6 inches above the floor of the house in which the gauge is set. The box is closed on the lower end (if in muddy water, preferably somewhat funnel-shaped), a small opening not over one-half inch in area being left in the center. One of the interior corners of the box is divided from the rest by a thin strip of wood extending the full length of the box, forming thus a separate compartment, in which the counterweight attached to the float band moves up and down.

When the gauge is easy of access and is to record fluctuations of a water level which are not very irregular and yet of great range, it is more economical and also more convenient for a rapid compilation of results to use single sheets for recording instead of continuous paper. These sheets are held upon the cylinder A by rubber bands and should be 13 inches long, lapping about 1 inch at the edge, in a direction opposite to which the cylinder moves. The manner in which continuous paper is attached and used has been referred to above and shown on the accompanying engraving. It remains, however, to follow somewhat in detail its movement from one roller to the other when the gauge is running. The paper moves in the same direction as the hands of a clock and is drawn along, as it were, by the needle points upon the cylinger A. This movement is materially assisted, but not accelerated, by a light counterweight, M, which is suspended from a sheave or pulley, N, fitted upon the axle of the wooden roller C. The cord is fastened with one end to the hub of the sheave N, and is coiled or wound upon the latter in such a manner that it must unwind as the paper rolls upon the roller C. The free end of the cord is then simply laid over the opposite pulley, O, on the roller B, and both pulleys are clamped tightly upon the axles with the set-screws. The weight M causes a slight tension in the paper between the roller and the cylinder A, and thereby assists in laying the paper evenly and smoothly upon the roller C. By laying the end of the cord from which the weight M is suspended over the pulley O, the sliding friction caused thereby retards the movement of the pulley slightly and prevents the paper from being unwound too rapidly from the roller B.

It is impossible to space the needle points on the cylinder A exactly 1 inch apart. The slightest difference in that respect is multiplied upon a long sheet of paper. Every gauge, therefore, should have its own scale of abscissas, constructed upon a strip of paper, using the punctures made by the needle points as units.

The "Stierle" tide gauge as described has been modified by this service from time to time, as deemed advisable and advantageous. The two accompanying illustrations (plates 4 and 5) show its appearance as modified to date. The following are some of the more important changes: In 1892, on the recommendation of Assistant E. E. Haskell, the use of the "deeply grooved" sprocket wheels and the "float band" was discontinued, and a grooved or screw float wheel and small copper or phosphor-bronze float wire substituted. By this arrangement, with the present size of float, the line of flotation or submergence remains practically constant, and, besides, the annoyance and loss of record caused by the sprocket band riding upon the rim of the sprocket wheel, which occurred from time to time, is avoided.

In 1894 an attachment, designed by Mr. F. M. Little, of the tidal division, for more accurately keeping and marking the time, was applied. In the original form the single clock had, in addition to keeping time, to propel the "drum or cylinder" carrying the paper, this being at different stages a fluctuating load, causing the clock to gain or lose, it being almost impossible to regulate it so that it would keep correct time for an extended period. This "hour-break" attachment, as it is called, consists of an additional and independent clock, that simply has to keep time, and the break mechanism, actuated by a clock spring, that the time-keeping clock trips at the end of every hour. On the back of the time clock and attached to its minute shaft is an arm which at the end or beginning of each hour trips the trigger projecting from the break mechanism. This permits the crank, working in the slotted arm, to make one revolution. This slotted arm is fastened to the end of the lower rod, which is the axis of the frame. Over the upper rod the hook from the pencil carrier hangs, but not in contact, and the pencil holder is pivoted in the pencil carrier so that the pencil can be rocked, allowing its point to trace a line about 5 millimeters long and parallel with the length of the paper. The pencil is held in its normal position by a small spiral spring, one end being attached to the pencil holder and the other to the pencil carrier. At the end of every hour the time clock releases the trigger, and thus the break mechanism rocks the frame over which the pencil-holder hook hangs, causing the pencil to move back and forth, thereby recording the hour exactly, regardless of what the rate or time of the driving clock may be. These hour breaks are shown on the accompanying reduction of a tidal record. (Fig. 2.)

The foregoing attachment has proved so satisfactory that it is now considered indispensable.

Subsequently the ends of the screw along which the pencil carrier traverses have been turned down, so that in case of an abnormal tide, greater than provided for by scale, the nut to the pencil carrier runs off the screw, permitting it to freely turn. When the tide turns and the motion of the screw is reversed, the flat spring, with an aperture in its free end against which the nut has been pressing, forces the nut back so that the screw takes it again. As originally devised, when the nut reached the end of the screw it jammed against the frame of the instrument and stopped the movement of the screw and float wheel, and as the tide continued to rise the float band or wire would become slack and run off the wheel, thus disarranging the gauge until the next time that it was visited by the observer.

The tension to the supply roller, for the purpose of holding the paper back straight and taut

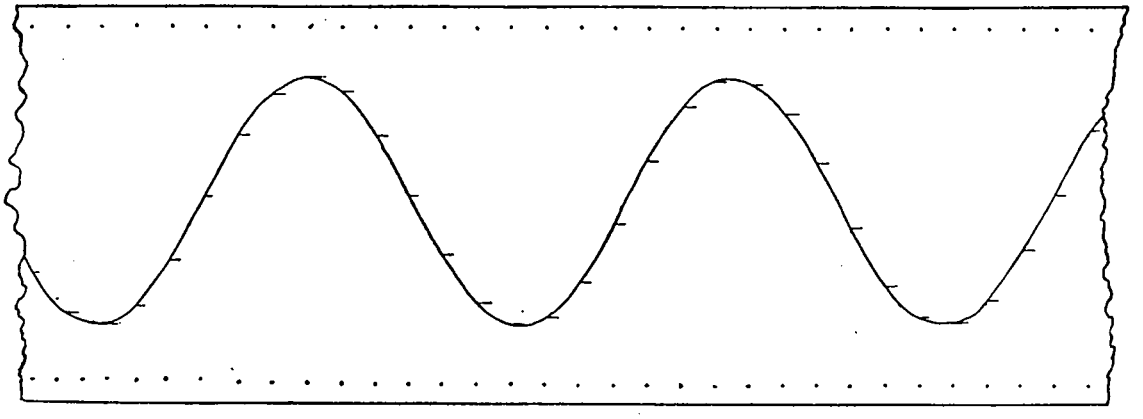

Fig. 2

Appearance of tidal sheet on reduced scale showing both the "marginal punctures" and the "hour breaks"

is now made by a flat spring bearing up under the supply roll, instead of by a weight, as described by Mr. Stierle.

More recently the forms of the supply and receiving rollers, as can be seen in the plate showing the clock faces, have been radically changed. The openings through the center of the rolls as received from the manufacturers vary somewhat, and the supply roller is now constructed with springs at each end to fill the varying diameters and always keep the roll concentric with the axis of rotation.

The receiving roller is now made tubular, with a narrow slit cut longitudinally its entire length. In starting, the end of the sheet is introduced into the slit, held by moderate pressure at its middle point, which, as the paper is wound up, enables it to readily adjust itself square with the direction of motion, thus preventing it from riding up on one side, turning an edge over, or jamming. The changes as described and illustrated were made to gauges of the "Stierle" pattern already in existence; as it becomes necessary to provide more, the proportions, forms of castings, etc., will be made, so as to reduce the number of parts, making the instrument more simple in general appearance, and, as there will be nothing then to undo, less expensive to construct.

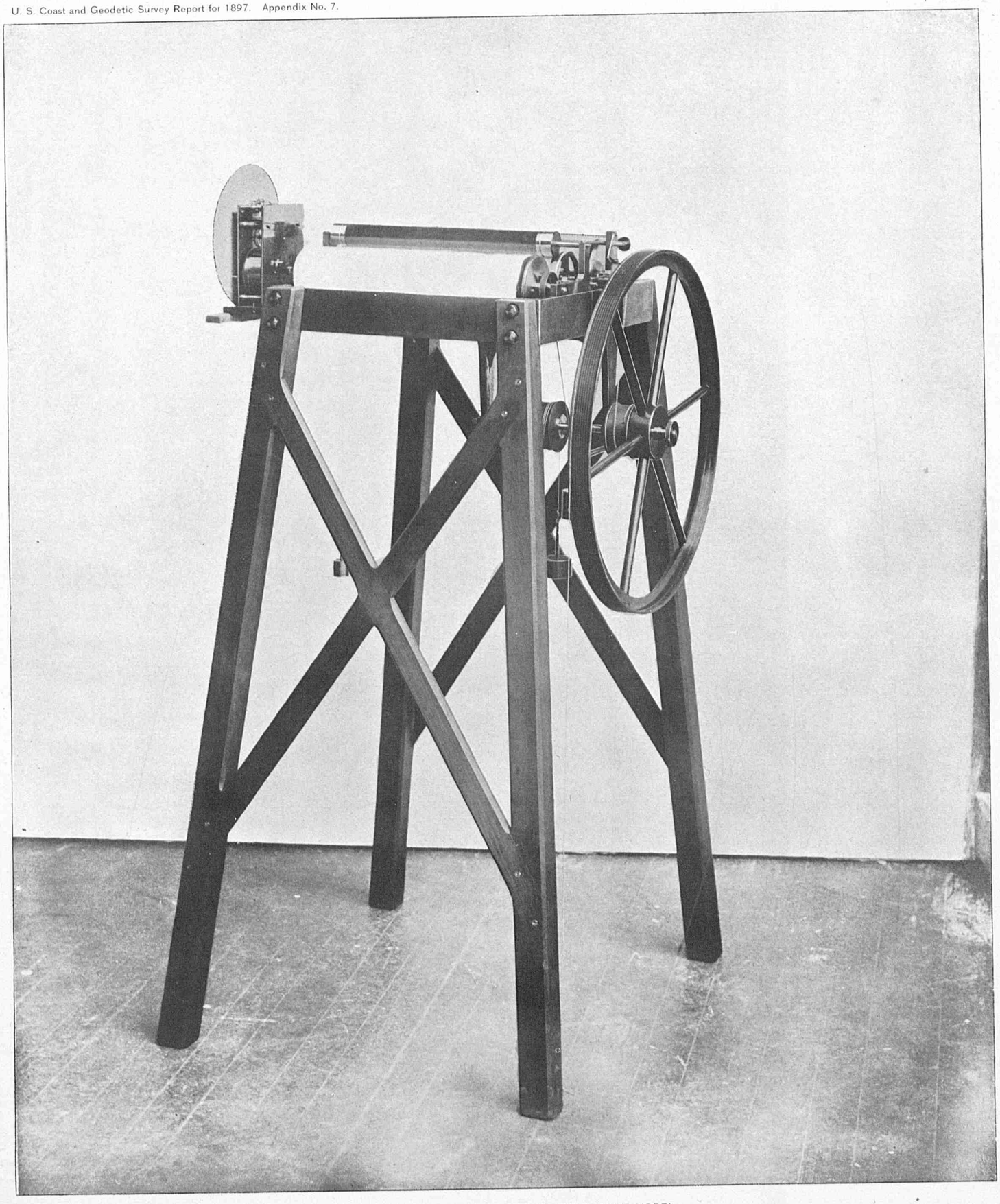

SAXTON SELF-REGISTERING TIDE GAUGE, LATEST MODEL.

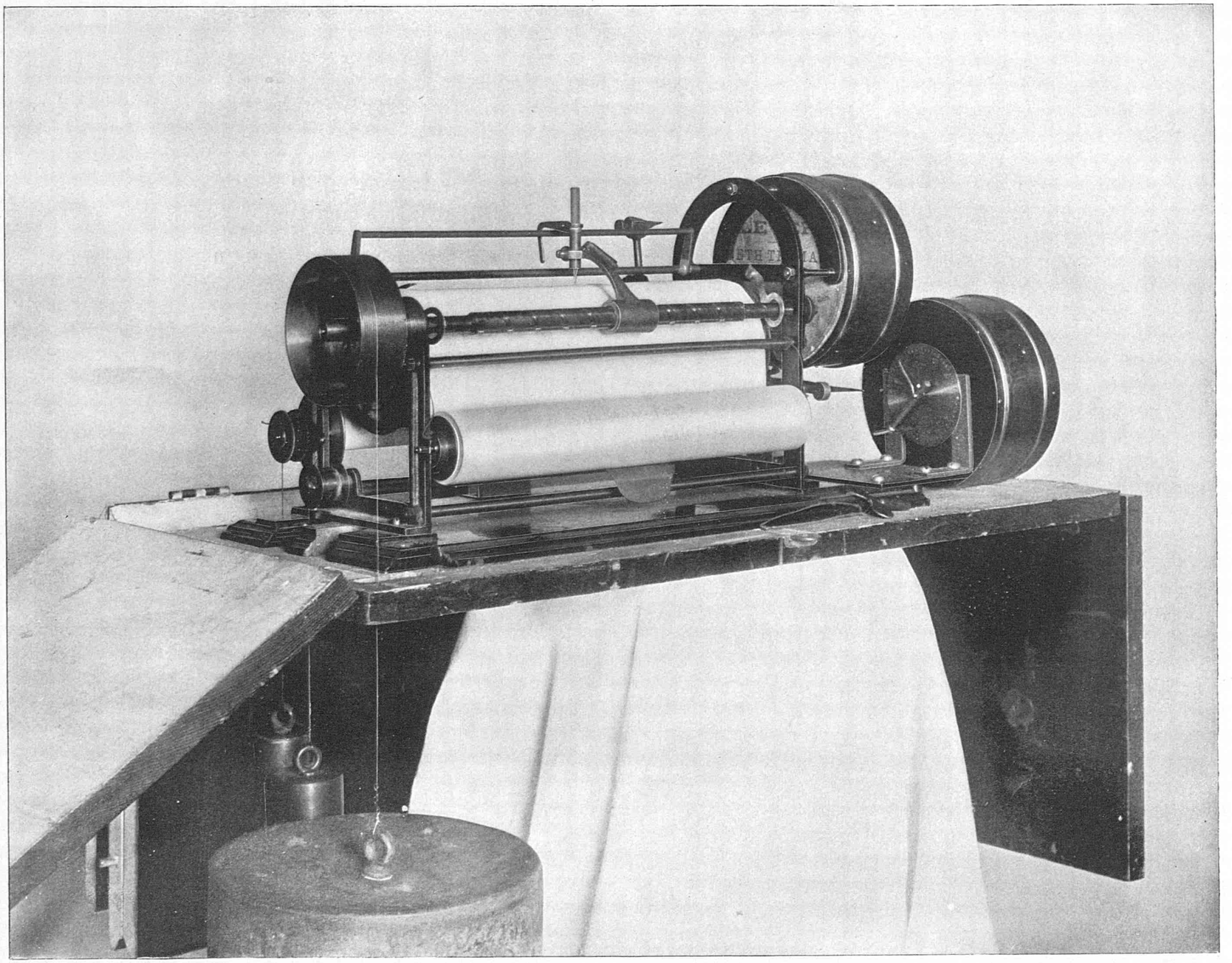

MODIFIED STIERLE TIDE GAUGE, MODEL OF 1896.

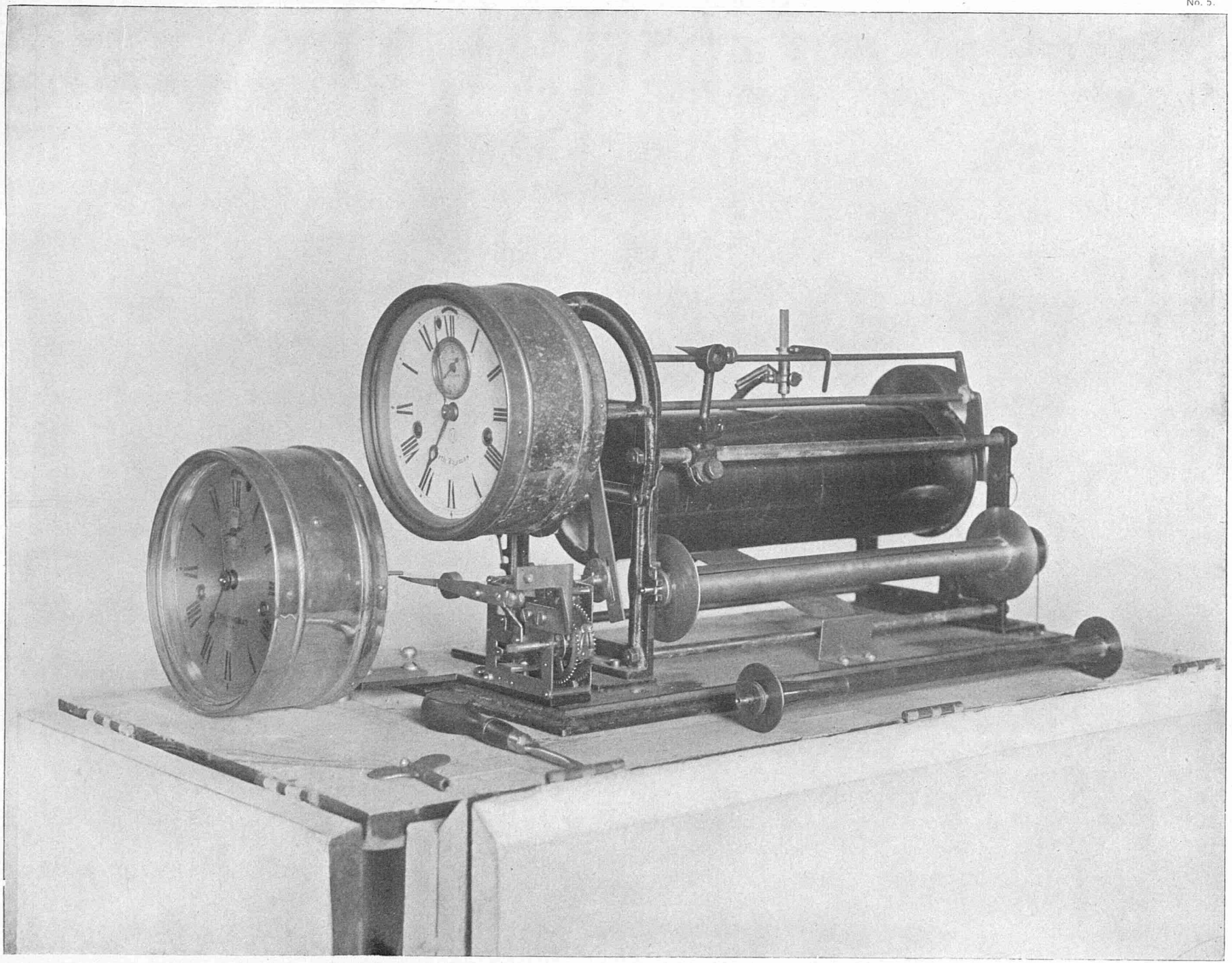

MODIFIED STIERLE TIDE GAUGE, MODEL OF 1896.

APPENDIX NO. 8—1897.

MANUAL OF TIDES.

PART I.

INTRODUCTION AND HISTORICAL TREATMENT OF THE SUBJECT.

By ROLLIN A. HARRIS.

Submitted for publication November 15, 1897.

Blank page retained for pagination

PREFACE TO PART I.

When the plan of this Manual of Tides was proposed it was considered best to prepare Part III in advance of Parts I and II. The reasons for this are stated in the preface to Part III, which appeared in the Report for 1894, where a brief outline of the several parts may be found.

Before attempting to point out the contributions of individuals to the subject of the tides, it has seemed best to give, as an introduction: (1) the definitions of terms of common occurrence; (2) a clear idea concerning the movements of fluid particles in simple wave motion; (3) a popular account of the cause of the tides; (4) the general properties of tides, and tidal inequalities together with means of ascertaining them.

In the chapters which then follow no attempt is made to include the histories of those sciences (e. g., astronomy and hydrodynamics) with which all study of the tides is closely connected, nor is it even attempted to give anything like a catalogue of tidal workers, or a full account of their works; but these chapters aim to give, in a nearly chronological order, some account of such results, work, or theories as may seem worthy of notice, generally because they mark some advance in the development of the subject, but sometimes either because they illustrate certain errors into which individuals have fallen or simply because they show the notions which have been entertained in the past.

As a rule direct quotations are taken in preference to comments whenever they seem to serve the purpose in hand.

A vague rule for deciding how far to describe or carry out the work of those individuals who have made extensive or profound investigations in connection with the tides, has been to either omit or to barely state such portions of their work as will probably be resumed or at least referred to in subsequent parts of this manual. But those portions of their work which will probably not recur, or not recur unchanged in form, have been given or described in greater detail, especially if they are well known or useful.

Concerning the work of Thomson and Darwin, it may be said that a large portion of it will of necessity appear as we proceed. When this is not the case, reference will be made at proper times. For this reason it has seemed unwise to here attempt any comprehensive or minute account of their labors.

CONTENTS OF PART I.

CHAPTER I.

DEFINITIONS.

Page.

Tide, range, interval, establishment 325
Spring tides, neap tides, phase or semimensual inequality, parallax and declinational inequalities 326
Diurnal inequality and quantities connected with it 328
Planes of reference 330
Tidal constants, harmonic components 331
Cotidal lines, tide tables 332
Tidal currents, their representation 334
Tidal theories 335
Bore, agger, race, seiche, great sea wave 336

CHAPTER II.

DIGRESSION ON PLANE, OR TWO-DIMENSIONAL, WATER WAVES.

Fundamental equations 338
Waves in a canal of uniform depth and indefinite length—
Displacement equations, paths of water particles, velocity of fluid particles, velocity of propagation 340
Equation of wave profile 341
Distinction between ordinary and tidal waves 345
Water waves compared to polarized light and to sound; reflection of water waves 346
Wave motion propagated up a canal closed at one end, stationary waves, the seiche period, paths of fluid particles 347
Effect of variable cross-section on range of tide 349
Hydraulic considerations 350

CHAPTER III.

ON THE ORIGIN OF TIDES.

Tide-producing force 353
Tides in a small body of water, graphic process 355
Self-returning equatorial canal 357
The tides of the ocean cannot agree with the equilibrium theory 359
Tides in the case of nature 359

CHAPTER IV.

GENERAL PROPERTIES OF TIDES AND MODES OF REDUCTION.

General properties, the equilibrium theory, harmonic analysis 363
Nonharmonic reductions, first reduction 368
Periods of tidal inequalities 369
Analysis of tidal inequalities 371
Nonharmonic constants 375
Phase reduction, rough predictions 378
Types of tide 383

CHAPTER V.

TIDAL WORK AND KNOWLEDGE BEFORE THE TIME OF NEWTON.

Page.
Earliest known references to tides by Greek writers 386
Strabo 389
Pliny 392
Other Latin writers 393
Early tide table, Scaliger, extracts from Hakluyt's Collection of Early Voyages 394
Bacon, Gilbert, Kepler, Galileo 397
Riccioli, Ballanus, Horrox, Descartes 401
Varenius 402
Wallis 404
Moray, Colepresse, Philips, Sturmy 406
Childrey, Flamsteed, Halley 407

CHAPTER VI.

NEWTON TO LAPLACE.

Newton 410
Bernoulli 415
Maclaurin, Euler 420
Lalande, St. Pierre, Bennett 421

CHAPTER VII.

LAPLACE.

Account of the work of Laplace 422
Outlines of his tidal theory 426

CHAPTER VIII.

WORK SINCE THE TIME OF LAPLACE.

Young, Weber 438
Palmer, Rennie 439
Lubbock 439
Whewell 440
Fitz Roy, Challis, Russell, Kerigan 442
Airy 443
Stokes, Beechey 451
Bache, Meech, Pourtales, Schott, Avery, Mitchell, Marindin 452
Houghton, Parkes, Croll, Abbott, Garbett, Taylor, Chapman, Schmick, Lentz, Comoy, Houzeau and Lancaster, Basset, Lamb, Harkness, Baird, d'Auria 454
Ferrel 455
Thomson 462
Darwin 464
Historical sketch of the harmonic analysis 465

Blank page retained for pagination

APPENDIX NO. 8—1897.

MANUAL OF TIDES—PART I. INTRODUCTION AND HISTORICAL TREATMENT OF THE SUBJECT.

By ROLLIN A. HARRIS.

CHAPTER I.

DEFINITIONS.

1. The principal movements of the sea may be divided into three classes: *Ordinary* or *wind waves*, *tidal movements*, and *ocean currents*. The essential feature of any tidal movement is, as the name implies, its periodicity. The period may not be of constant length, but if variable it must follow some conceivable law. In conformity with this notion the word *tide* may be defined as the periodic rising and falling of oceanic and other large bodies of water, due mainly to the attraction of the moon and sun as the earth rotates upon its axis. This rising and falling is accompanied by and depends upon a lateral or horizontal movement of the waters; such movements are called *tidal currents*. Their periodic character distinguishes them from *ocean currents*. Remarkable stages of the water level at a given place, whether due to earthquakes, gales, or other causes which probably have no definite law of recurrence, although popularly known as "tidal waves," can not be regarded as belonging to tidal phenomena. On the other hand, the stages of a river, if periodic in their nature, may with propriety be included in its tides.

2. The tide rises until it reaches a maximum height called *high water*, and then falls until it reaches a minimum height called *low water*. These two phases of the tide may be spoken of as the *tides*. The difference between a high and a low water is called a *range* of tide, and so is independent of absolute heights; its average value is called the *mean range* (Mn). For a few minutes before and after high or low water, it is difficult to observe any vertical motion in the tide. While thus apparently stationary, the tide is said to *stand*. In this connection see § 15.

For reasons to be given later, based upon the fact that the tides are due chiefly to the difference between the moon's attraction upon the enveloping sea and the earth as a whole, one would expect that at most tidal stations two high waters and two low waters would occur each lunar day; in other words, to each transit of the moon (inferior as well as superior) there would correspond one high water and one low water. On an average, the time of high water at a given station follows the time of transit by a certain number of hours and minutes, called the *high-water interval* (HWI), or *high-water lunitidal interval*, or *corrected establishment*. In like manner the *low-water interval* (LWI), or *low-water lunitidal interval*, indicates, unless otherwise specified, the average number of hours and minutes between the time of transit and the time of low water. If intervals at some particular time are meant they should be properly distinguished by name or otherwise; or the average values may, for distinction, have the word *mean* prefixed to their name. The *establishment* or *vulgar establishment* is the (apparent local) time of high water occurring at new or full moon; or, preferably, and what is about the same thing, the high-water interval when the transit (just preceding the tide) occurs at noon or midnight.*

*Cf. Lalande, Astronomie (1771–1781), Vol. IV., pp. 43, 314–319; Whewell, Phil. Trans., 1833, pp. 163, 229, 230; Lubbock, ibid., pp. 19–21; Raper, Navigation (1840), p. 261; Darwin, Admiralty Manual, 5th ed., p. 55; Wharton, Hydrographic Surveying (1882), pp. 145, 149.

An *inequality* in interval, range, or height is a systematic departure of the same from its mean value. The extreme amount of this regular departure is sometimes called the *coefficient of the inequality.*

3. Not long after new or full moon, the tidal effect of the sun is added to that of the moon. When this effect upon the range is greatest the tides are called *spring tides* (*marées de vive eau*). At any given place the *retard*, or interval between new or full moon and spring tides, may be regarded as constant. Not long after the moon is in quadrature, the tidal effect of the sun is taken away from that of the moon, and when the range becomes a minimum from this cause *neap tides* (*marées de morte eau*) occur.* Their retard at a given place may be regarded as constant, and it does not differ much from the retard of the spring tides, unless the water is shallow, in which case the retard (spring or neap), as derived from the high waters alone, will differ from that derived from the low waters.

The inequality, or apparent irregularity, in time or height introduced by the sun, and so dependent upon the moon's phase, is variously styled the *semimenstrual*, *semimensual*, *semimonthly*, or *phase inequality;* the last seems preferable for most purposes, because there are several kinds of month in common use, especially in tidal work, and the word "phase" suggests a connection with the age of the moon.†

When the sun's tidal effect shortens the lunitidal intervals, causing the tides to occur earlier than usual, there is said to be a *priming* of the tide; when, from the same cause, the interval is larger than usual, there is said to be a *lagging.*

A *tidal day* is the variable interval ($24^h\ 50^m$ on an average) between two alternate high or low waters. A more accurate definition is the interval between the mean of four consecutive tides and the mean of the succeeding or preceding group of four consecutive tides.

The amount by which the tidal day exceeds $24^h\ 50^m$ is sometimes called the "lagging of the tide," and the amount which it falls short the "priming."

The amount by which corresponding tides grow later day by day (i. e., the amount by which the tidal day exceeds $24^h\ 00^m$) may be called the *daily retardation.*‡

The retard, especially spring and more especially spring high-water, has been called the *age of the tide.*§ If this term is to be retained, it seems desirable to suppose the age to have one value, and that such as to suit the neap as well as the spring tides, the low waters as well as the high. Moreover, instead of "age of the tide," the expression "age of the phase inequality" will generally be used in what follows. It will subsequently appear that, for deep water at least, the lunitidal interval of such tides as happen to occur as many hours after syzygy as represent the age of the phase inequality, have their mean values. In other words, the spring and neap intervals are about equal to the mean intervals. Because of this fact the times of such tides as give mean intervals may be used in determining the age. Experience has shown that the ages as determined from heights or ranges do not agree with those determined from times (intervals).‖ For this reason it seems best, wherever possible, to define it by the value obtained from the harmonic constants of the place and explained in Part III.¶

---

* The spring and neap ranges are conveniently denoted by the symbols Sg, Np. Their connection with Mn is shown by the approximate expressions (83), (84), Part III. When μ_2 has a large shallow-water part (2MS), as at Liverpool, so that $2M^\circ_2 - S^\circ_2 - \mu^\circ_2$ is not near zero, it may be worth while to replace μ_2 in these expressions by $\mu_2 \cos(2M^\circ_2 - S^\circ_2 - \mu^\circ_2)$.

† There are some objections to the term "phase inequality" inasmuch as particular portions or aspects of the tide, such as high water, low water, or an intermediate time, may be referred to as its phases. Again, according to established usage, the phase of a wave, or oscillation, is the angle upon which the displacements depend; e. g., the phase of the harmonic oscillation

$$y = C \cos(ct + \gamma)$$

is the angle $ct + \gamma$.

‡ Cf. Laplace, Méc. Cél., Bk. IV, §§ 35 et seq.

§ Cf. Whewell, Darwin, Wharton, loc. cit.; Ferrel, United States Coast Survey Report, 1875, p. 209.

‖ Airy Tides and Waves, Arts. 541-547; Phil. Trans., 1843, pp. 53, 54. Ferrel, United States Coast Survey Report, 1868, pp. 55, 75, 76; Tidal Researches, pp. 174-199; United States Coast Survey Report, 1875, pp. 209-212.

¶ Age of phase inequality expressed in hours $= 0{\cdot}984\,(S_2^\circ - M_2^\circ)$. Laplace shows that (for Brest) the age obtained from heights near the syzygies ($=1{\cdot}51349$ days) is very nearly equal to the age similarly determined from heights

Since successive transits of the moon occur on an average $12^h\ 25^m$ apart, the age can be approximately expressed by stating the number of the transit preceding the tide to which the lunitidal intervals are to be applied.* The effect of selecting an earlier transit is to increase the lunitidal interval by $12^h\ 25^m$. Of course, by adapting the transits to a suitable terrestrial meridian, any age can be allowed for.

Another way of reckoning the age is by the hour of the moon's transit. The time of transit increases on an average 50^m daily, so that if the transit used for spring tides occur at $0^h\ 50^m$, such transit follows syzygy by 24^h. But the tide follows the transit by the lunitidal interval;

$$\text{age} = \frac{24 \times 60}{50} \left[\begin{matrix}\text{hour of transit for} \\ \text{maximum range}\end{matrix}\right] + \tfrac{1}{2}\,(\text{HWI} + \text{LWI}), \qquad (1).$$

Whenever the "hour of transit" exceeds 12^h, 12^h must be rejected. The same formula is adapted to neap tide, by replacing the word "maximum" by the word "minimum," and always discarding 6^h or 18^h from the "hour of transit."†

To infer the age from the time when the interval has its mean value, replace "maximum" range by "mean lunitidal interval," $= \frac{1}{2}\,(\text{HWI} + \text{LWI})$.

Some writers prefer to increase the age or retard, as defined above, by the high-water interval, because of the fanciful notion that they thereby obtain the interval between the transit of the moon and the appearance of the resulting high water.

4. Other things being equal, the range of tide becomes a maximum soon after the moon is in perigee and a minimum soon after she is in apogee. At these times *perigean* and *apogean* tides occur.‡ The amount by which these effects follow their respective causes may be called the *age of the parallax inequality*. Like the age of the phase inequality it may be defined in terms of the harmonic constants.§

If this age be approximately allowed for by selecting a proper transit, the lunitidal interval will, so far as this inequality is concerned, remain nearly constant throughout its period, which is an anomalistic month.

If, however, the intervals be distributed under two arguments, the moon's phase and her parallax or anomaly, the departures from the average values of the intervals will depend upon both arguments. The phase inequality being known for a mean value of the moon's parallax, the tabular values just described give, when diminished thereby, the parallax inequality in interval arranged under two arguments. Even when thus distributed, the parallax inequality in time is small; but the parallax inequality in height is of considerable importance.|| If a wrong age of the parallax inequality be taken (i. e., if the tides be referred to a wrong transit so far as this inequality is concerned), the inequality in interval will become greater.¶ If the tides are not classified with respect to the moon's phase (i. e., if they are classified with respect to parallax or anomaly only), the value of the parallax inequality in time will, as already stated, be small if the transit used corresponds well with the age of the parallax inequality.**

5. In a similar way the effect of the moon's declination or longitude may be considered. Soon

---

near the quadratures (1.51116): Méc. Cél., Bk. XIII, § 7. Ferrel's constants make the age from heights 1·42 days and from intervals 1·87: United States Coast Survey Report, 1875, pp. 209–212. The harmonic constants make the age 1·63 days.

* Lubbock, Treatise on Tides, pp. 25–29, or Phil. Trans., 1837, p. 97.

† Because of the moon's variation, 50^m should be replaced by 51^m for spring tides and by 49^m for neap tides; but, as both spring and neap tides can generally be used in determining the age, this becomes unnecessary.

‡ The perigean and apogean ranges of tide are conveniently denoted by Pn, An.

§ Age of parallex inequality $= 1{\cdot}837\ (M_2^{\circ} - N_2^{\circ})$ hours.

|| E. g., Lubbock, Phil. Trans., 1836, pp. 58, 59; 1837, pp. 119, 133. Ferrel, United States Coast Survey Report, 1868, p. 69.

¶ E. g., Lubbock, Phil. Trans., 1834, pp. 144, 163; 1835, p. 286.

** E. g., Ferrel, United States Coast Survey Report, 1868, pp. 60, 76, especially the low-water intervals. Here the implied (parallax) age is about 50^h for the high waters and 57^h for the low waters. The harmonic constants give 58^h for the age of the parallax inequality.

Ibid., 1875, p. 196. Here the implied (parallax) age for the high waters is 8^h and for the low waters $14\frac{1}{4}^h$. The harmonic constants give 33^h. As might be expected, the tabulated inequality (in time or interval) is somewhat greater than in the preceding instance.

after the moon is upon the equator the greatest semidaily range of tide will occur, other things being equal, and soon after the moon's extreme declination, the smallest. If a transit be selected which corresponds well with the age of this inequality, the intervals will be, as in the case of the parallax inequality, little affected by its presence. There is one difference, however, and that is, the sun's declination has a direct effect upon the lunitidal intervals, even if the proper transit has been selected. The period of the sun's declinational inequality in the tides is, in the long run, the same as that of the moon's, viz., a half tropic month, and so the two can not be separated in the treatment of a long series of observations all distributed under one argument—the moon's declination or longitude.* This combined effect may be styled the *declinational inequality*. Its age is pretty nearly equal to that of the phase inequality.

6. Other irregularities in the motions of the moon and sun give rise to corresponding apparent irregularities or inequalities in the tides. Among these may be mentioned one depending upon the longitude of the moon's node, one upon the moon's evection, and one upon the sun's anomaly.†

In ascertaining how the tide of a given day is disturbed by the inequalities, care should be taken to observe whether or not one inequality is involved in another. For instance, if the moon's anomaly is the argument for the parallax inequality, the tabular values (if derived from a sufficiently long series of observations) will be free from the inequality due to the evection, and this latter may be tabulated and used as an independent correction. If, however, the moon's *parallax* be taken as an argument, the inequality due to evection, i. e., having the evectional period, must be small in comparison with its former value, because it is, for the most part, tabulated under the argument "parallax." So if we use the moon's longitude as an argument, the declinational inequality (semidiurnal) will, in the long run, be free from the inequality due to the regression of the lunar node. If, however, the declination of the moon, instead of the longitude, be used as an argument, the nodal inequality will be nearly allowed for.

7. *Diurnal inequality in height* is the difference in height between two consecutive high waters or low waters.‡

Diurnal inequality in time or interval is the difference in length of two consecutive high water intervals or low water intervals.

At most places the high water inequality (in height or time) differs from the low water inequality.

If the greater height inequality be in the high waters, the greater time inequality will be in the low waters, and conversely.

Wherever both of the height inequalities are small in comparison with the (semidaily) range of tide, the inequalities in time (interval) are very small.

These inequalities vary in value throughout a half tropical month, and also a half tropical year.

The portion due to the moon may be computed and tabulated under the argument of the moon's declination (as it was at a time anterior to the time required, determined by the *age of the diurnal inequality*§). The portion due to the sun may be tabulated with the two arguments, the day of the year and the hour of the moon's (upper) transit reckoned from 0 to 24.‖ The combined effect of moon and sun may be made to follow the moon's declination and the day of the year. If this inequality be comparable in size with the phase inequality, the two should be tabulated together, thus necessitating a table of three arguments, the two just mentioned and the hour of transit.

If, however, we disregard the variation in the obliquity of the lunar orbit to the plane of the equator, two arguments suffice for the combined effect, viz., the hour of transit and the day of the year; for these two then infer the moon's right ascension and so her longitude or declination. The number of days from the moon's zero or extreme declination is preferable to the day of the

* E. g., Ferrel, United States Coast Survey Report, 1868, pp. 60, 78; Ibid., 1875, p. 197.

† E. g., Ferrel, United States Coast Survey Report, 1868, pp. 79–82.

‡ At places where the phase inequality is large in comparison with the diurnal, it becomes necessary to compare a given high water, say, with the mean of the immediately preceding and following high waters in order to put in evidence the high water diurnal inequality; similarly for the low water inequality.

§ E. g., Ferrel, United States Coast Survey Report, 1868, p. 97.

‖ Ibid., pp. 100, 101.

year as an argument. But for the variation in the obliquity of the lunar orbit to the plane of the earth's equator, very good predictions could be made from tables having these two arguments.*

The *diurnal wave* is that portion of the tide whose period is approximately one day. Its range varies throughout the half tropical month and half tropical year. The maximum value of this range may be regarded as occurring, in the long run, a constant number of hours (viz., the age of the diurnal inequality) after the moon reaches her extreme fortnightly declination; at such times *tropic tides*† are said to occur, because for most places the moon is then near one of the tropics.‡ The age of the diurnal inequality is such that if the times of zero declination be increased thereby, the range of the diurnal wave will be a minimum. This age, like the ages of other inequalities, may be expressed in terms of the harmonic constants.§

The diurnal inequality is due to the presence of the diurnal wave. At the time of the tropic tides, the diurnal inequality (time or height) may be spoken of as tropic. The inequality in high water heights is then denoted by HWQ and in low water LWQ. The larger one then has its maximum value very nearly; so has the quantity $\sqrt{HWQ^2+LWQ^2}$, which is an approximate expression for the tropic range of the diurnal wave, and with greater reason. At places where HWQ, say, is several times smaller than LWQ, the high water inequality when tropic tides occur may not have, even approximately, its maximum value.

Of the four ranges of tide upon a day when tropic tides occur, the greatest is called the *great tropic* (Gc) and the least the *small tropic* (Sc).

The mean range from all four tropic tides is the *mean tropic range* (Mc).‖

The *great* [*diurnal*] *range* (Gt) is the difference between the mean of all the higher high waters (HHW) and the mean of all the lower low waters (LLW) of each day during one or more half tropical months.

The *small* [*diurnal*] *range* (Sl) is the difference between the mean of all the lower high waters (LHW) and the mean of all the higher low waters (HLW) of each day during one or more half tropical months.

It is sometimes convenient to distinguish between the four ranges, which at most stations occur upon any given tidal day, by means of the following terms: The *great range*, the *small range*, the *high range*, and the *low range*. (See Fig. 1.) At stations where the tide is diurnal there are but two ranges each tidal day, the great and the small.

The great tropic range and the lunitidal intervals connected with it can be observed even if the tide becomes wholly diurnal in its character. So with the great diurnal.

The *sequence of tide* is the order in which the four tides of a day occur, particularly the tropic tides. It may be expressed thus, "higher high to lower low," or "lower low to higher high," as the case may be. The $\begin{matrix}\text{former}\\\text{latter}\end{matrix}$ expression indicates that (tropic) lower low water $\begin{matrix}\text{follows}\\\text{precedes}\end{matrix}$ (tropic) higher high water without the lesser tides intervening. The time between (tropic) $\begin{matrix}\text{higher high}\\\text{lower low}\end{matrix}$ water and (tropic) $\begin{matrix}\text{lower low}\\\text{higher high}\end{matrix}$ water must be taken as less than a half lunar day. At places where HWQ and LWQ are very unequal, the sequence, even of the tropic tides, may be different for different seasons of the year.

The *type of tide* is its characteristic form. It is generally indicated by the sequence of tides, the ratios of the tropic diurnal inequalities, and of the spring range, to the mean range. For shallow waters, however, in rivers especially, the duration of rise or fall may become very important.

* E. g., Lubbock, Phil. Trans., 1836, pp. 65–73; 1837, pp. 109–118, 126–130. Bache, United States Coast Survey Reports, 1854–1864, "Tide tables for the use of navigators."

† Cf. Airy, Phil. Trans., 1845, pp. 44–46, where approximate values of the tropic semirange of the diurnal wave are given on the coasts of Ireland. The word *tropic* was officially adopted by the Coast and Geodetic Survey, Dec. 19, 1894.

‡ The coasts of Europe form an exception, the age being from 2 to 6 or more days. Whewell, Phil. Trans., 1837, p. 81.

§ Age of diurnal inequality expressed in hours $=0{\cdot}911\ (K_1^\circ-O_1^\circ)$.

‖ It is equal to $\frac{1}{2}(Gc+Sc)$, and is somewhat less than Mn, the relation being $Mc=Mn-2K_2\cos[(K_1^\circ-O_1^\circ)\sim(K_2^\circ-M_2^\circ)]$. Expression (89), Part III, includes semidiurnal constituents only, and so is not exactly equal to $\frac{1}{2}Mc$; in strictness, the cosine factor should there also be appended to K_2.

Fig. 1 illustrates the tropic tides and quantities connected with them at San Francisco. In this case the tide is largely diurnal, the sequence is HHW to LLW, and LWQ > HWQ.

8. The *tide curve* or *marigram* is a curve whose abscissæ increase uniformly with the time, and whose ordinates represent the heights of the tide or sea at the corresponding times.

The average value of the ordinates of the tide curve (reckoned from some fixed mark upon the shore) defines the height known as *mean sea level* or *mean water level.*

The average value of the heights of high and low waters (reckoned from some fixed mark upon the shore) defines the height known as *half-tide level.*

Mean sea level and half-tide level do not differ much from each other except at places where the duration of fall differs by a considerable amount from the duration of rise, or where the diurnal inequality is large.*

Mean sea level (MSL) is the most nearly fixed, and therefore the best, of all planes defined by the tide. *Planes used in reducing soundings or in reckoning elevations above the sea should always have a known relation to mean sea level, or at least to half-tide level* (HTL).

The plane of *average* or *mean low water* is one-half Mn below half-tide level. The soundings

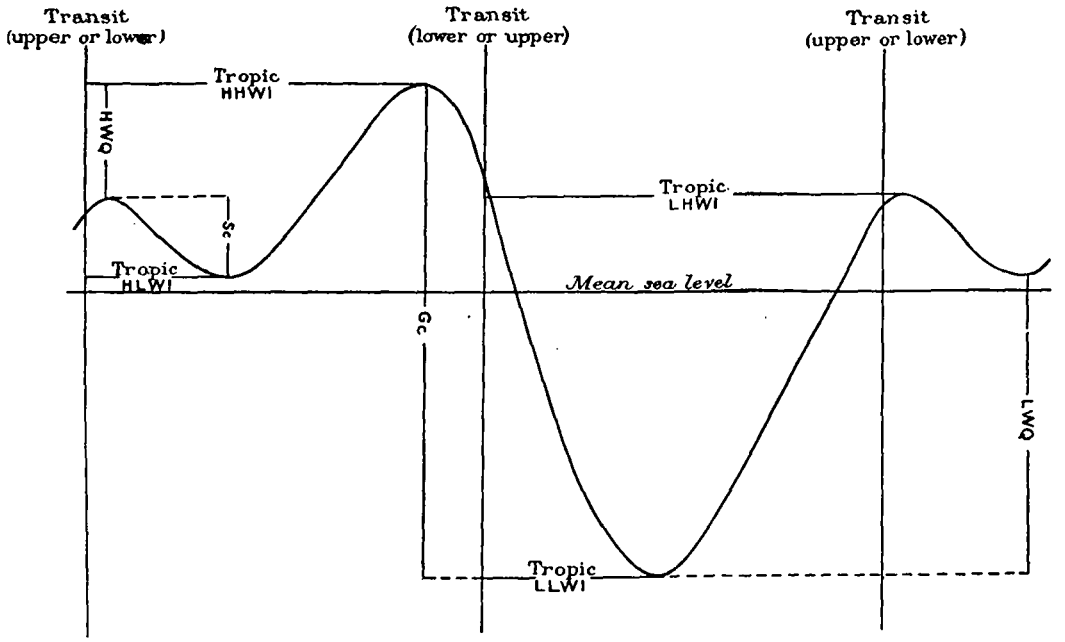

Fig. 1.

on the Coast Survey charts of the Atlantic coast of the United States are reduced to this datum.

The plane of *mean low-water* (ordinary) *springs* is about one-half Sg below half-tide level or mean sea level. This is the plane generally used along the outer coasts of Europe. The soundings upon the charts of the French coast are reduced to the lowest tides observed.

The plane of *average lower low water* or *average daily low water* is used generally upon the Pacific coast of the United States as well as the Gulf of Mexico.

The *Indian (harmonic) tide plane* or *Indian spring low-water mark* is $M_2 + S_2 + K_1 + O_1$ below mean sea level. These symbols are defined in the next paragraph.

The plane of *equinoctial low-water springs* is the datum sometimes used by the British Admiralty in Indian waters.

In many localities the datum of soundings is an arbitrary, but known, distance below a fixed bench mark. In the establishment of any such plane the hydrographer usually aims at some

* Part III, § 24.

$$\text{HTL} = \text{MSL} + M_4 \cos\left(2M_2^\circ - M_4^\circ\right) - 0{\cdot}04\,\frac{(K_1+O_1)^2}{M_2}\cos\left(M_2^\circ - K_1^\circ - O_1^\circ\right)$$

plane which is capable of definition with respect to the tide; e. g., mean low water, low-water springs, etc.

In a few cases the plane of reference is the height of the lowest observed tides. Of course a datum of this kind cannot be recovered unless through an established bench mark.

Since all datum planes must be connected with mean sea level, it might be advisable to reduce soundings to a plane an integral number of feet below this level, the same number to be used over a considerable area, and to be determined by the lowest tides likely to occur. Such areas or regions could be indicated upon the charts.

Some hydrographers have used the expression "low-water springs" to denote extremely low low waters due to various inequalities in the tide. Such careless usage should be discouraged.

Heights on the land when accompanied by the expression "above tide" or "*A. T.*," usually refer to high water. This is objectionable, because the height of high water depends upon the range of the tide, and this in turn upon the locality of the tidal observations. Above mean sea or mean water level is a much less objectionable signification.

In connection with tidal planes, see § 20, Part II, and §§ 42–45, Part III.

9. *Tidal constants* are certain intervals (angles) and heights (amplitudes) used in describing the tide; they are absolutely constant, or nearly so, at a given place.

Nonharmonic constants are those tidal constants which refer in some way to high and low water instead of to the constituent periodic elements into which, as will be shown in Part II, the tidal wave may be resolved. *Harmonic constants* refer to these periodic elements.

The portion of the tide following any period strictly, can, by Fourier's theorem, be analyzed into one or more simple cosine terms whose angles or arguments (which are proportional to time) go through 360°, and multiples thereof, in the given periodic time. Either the process or the result is spoken of as an *harmonic analysis.** Each such term is called an *harmonic component*, *component tide*, *partial tide*, *simple tide*, or simply a *component*. The (uniform) hourly change in the angle of any component is called its *speed;* the value of its angle reckoned from its high water at any given instant is called its *phase;* its (constant) semirange is called its *amplitude;* the (constant) angular retard of the maximum of any component C behind its astronomical cause or fictitious moon (as assigned by the uncorrected equilibrium theory in Part II) is its *epoch* or *lag*. The amplitude of C will be denoted by C, the epoch by $C°$, and the speed by c. If C have a period of approximately one day or twenty-four hours, it is said to be diurnal and is written C_1; if it have a period of approximately twelve hours, it is said to be semidiurnal and is written C_2, and so on. At most places the semidiurnal components are so much larger than the diurnals, quarter diurnals, etc., that the tide curve of any particular day approximates toward a sine (or cosine) curve whose period is about twelve lunar hours.

In the analysis of tidal currents C and $C°$ may be replaced by $\dot{C}$ and $\dot{C}°$, $\dot{C}$ denoting the amplitude of the component velocity and $\dot{C}°/c$ being the interval between the transit of the fictitious moon (Table 3) and maximum velocity.

The *principal lunar component*, denoted by M_2, has an hourly speed of 28°·984 1042, and so its period is a half lunar day.

The *principal solar component*, denoted by S_2, has an hourly speed of 30°·000 0000, and so its period is a half solar day.

The *luni-solar diurnal component*, denoted by K_1, has an hourly speed of 15°·0410 686, and so its period is a sidereal day.

The *principal lunar diurnal component*, denoted O_1, has an hourly speed of 13°·943 0356, and so its period exceeds the lunar day by the same amount as the period of K_1 falls short of it.

For a more extended list of components see §§ 15–18, Part II, and Tables 1, 36.

---

*For analyzing the quality or timbre of a given note, Helmholtz made use of a series of spherical shells or resonators whose periods of vibration were fixed and known. In this way he could pick out the overtones which were present in the note sounded. The object of the harmonic analysis of a series of heights, tabulated and summed according to a given component time, is quite analogous to that of the analysis of a musical note. The harmonic analyzer to be described in Part II may be likened to Rudolph Koenig's combination of resonators (Jamin, Cours de Physique, 4th ed., Vol. III, p. 175; or Ann. de Pogg., Vol. 122 (1868), pp. 666 et seq.), while the tide predictor (Part III) may be likened to the sirens of Seebeck and Koenig (Jamin, Vol. III, p. 172).

Example showing how one simple wave is displaced by another.—The height of the surface of the sea from mean level due to the two components A, B is

$$y = A\cos(at+\alpha) + B\cos(bt+\beta) \tag{2}$$

Here the amplitudes are A, B, the speeds a, b, and the initial phases α, β.

If $a = b$, the resultant wave is harmonic, having as its amplitude

$$\sqrt{A^2+B^2+2AB\cos(\alpha\sim\beta)} \tag{3}$$

That is, if we form a parallelogram analogous to the parallelogram of forces regarding α, β as giving the directions of A, B, the resultant amplitude is the diagonal of the parallelogram, setting out from the intersection of A and B. Or, it is the third side of a triangle whose opposite angle is $180^\circ-(\alpha\sim\beta)$.

The phase of the resultant wave is the angle whose tangent is

$$\frac{A\sin\alpha + B\sin\beta}{A\cos\alpha + B\cos\beta} \tag{4}$$

The resultant wave may, therefore, be written

$$\sqrt{A^2+B^2+2AB\cos(\alpha\sim\beta)}\cos\left[(at+\tan^{-1}\left(\frac{A\sin\alpha+B\sin\beta}{A\cos\alpha+B\cos\beta}\right)\right] \tag{5}$$

In the parallelogram construction just referred to, this angle is the direction of the resultant diagonal. If α (or β) $= 0$, the above angle is the angle between the resultant and A (or B). In fact, it is then the angle adjacent to A (or B) of the triangle referred to above.

10. A *cotidal line* is an assemblage of points on the earth's surface where tides occur at the same absolute time. The number of each such line is usually taken as the lunar time (i. e., the lunar hour after upper or lower transit) at Greenwich when high water occurs at stations along the cotidal line. If solar hours are used—reckoned, of course, from the time of the moon's transit—each period of cotidal lines will consist of 12.42 hour-lines instead of 12. The cotidal lunar hour of a place whose west longitude in time is L is

$$0{\cdot}966\ \mathrm{HWI} + L,* \tag{6}$$

while the cotidal solar hour is

$$\mathrm{HWI} + 1.035\ L.† \tag{7}$$

If Greenwich transits be used in making a "first reduction," § 51, the interval so obtained + S, the longitude of the time meridian expressed in time, is the cotidal solar hour. If the meridian over which the moon is assumed to pass have a west longitude in time equal to E, then L must, in all cases, be replaced by $L-E$.

If instead of HWI, we write the vulgar establishment or lunitidal interval at full and change, we have the cotidal lines for full and change‡ and not for spring tides or for tides of mean lunitidal interval. On the other hand, the retard of the spring tides is not the same the world over, and so the cotidal line

$$0{\cdot}966\ \mathrm{HWI} + L$$

does not represent a series of points along which it is simultaneously and exactly high-water springs; in fact, such lines do not exist.

For limited areas, lines of equal lunitidal interval may be drawn instead of cotidal lines. This amounts to making $L = 0$ in (6) and (7).§

---

* Cf. Whewell, Phil. Trans. 1836, p. 293 and chart opp. p. 306. Bache, United States Coast Survey Reports: 1854, p. 149 and sketch 26; 1855, p. 339 and sketch 49; 1862, p. 127 and sketch 46.

† Cf. A. S. Christie, The Lady Franklin Bay Expedition, Vol. II, pp. 697 et seq.

‡ E. g., Whewell, Phil. Trans. 1833, pp. 148, 149; 1848, p. 7. Airy, Tides and Waves, plate 6; reproduced in Enc. Brit., Art. "Tides." Haughton, Manual of Tides and Tidal Currents (1870), Plate IV. Berghaus, Physikalischer Atlas (1892). Probably most astronomies and physical geographies adopt this system.

§ E. g., Schott, United States Coast Survey Report, 1854, p. 173, sketch 16.

Intervals referring to the diurnal wave can be used in a similar way for obtaining cotidal lines referring to the diurnal portion of the tide.*

If observations were sufficiently extensive it would be possible to draw a set of cotidal lines for each harmonic component of the tide. Accordingly, a cotidal line for the component A_i is an assemblage of points on the earth's surface where the A_i tide occurs at the same absolute time. Such lines are naturally numbered in A_1 hours after the transit of the A_i fictitious moon across some fixed meridian, as that of Greenwich; but they may be numbered in B_1 hours after the transit of the A_i moon.

The cotidal A hour for the component A is

$$\frac{A_i^\circ}{i\,15} + L, \tag{8}$$

while the cotidal B hour for the component A is

$$\frac{b}{a}\left(\frac{A_i^\circ}{i\,15} + L\right). \tag{9}$$

The principal tidal components are M_2, S_2, K_1, and O_1. If $A_i = M_2$,† the cotidal *lunar* hour for M_2 is

$$\frac{M_2^\circ}{30} + L \tag{10}$$

which is, in deep water, nearly equal to

$$0{\cdot}966\ \mathrm{HWI} + L.$$

If $A_i = S_2$, the cotidal *solar* hour for S_2 is

$$\frac{S_2^\circ}{30} + L. \tag{11}$$

If $A_i = K_1$,‡ the cotidal *sidereal* hour for K_1 is

$$\frac{K_1^\circ}{15} + L. \tag{12}$$

11. *Tide tables* are ephemeral publications, usually covering a calendar year, showing in tabular form the predicted or computed times and heights of the high and low waters.

For certain principal or typical stations such predictions are given in full, i. e., all tides of the year are predicted; but for most places tidal *differences* and *ratios* are given, which enable the user to obtain his tides from the tides at stations having full predictions.

The following are the principal tide tables:

"Tide Tables by the United States Coast and Geodetic Survey." This publication covers quite thoroughly the coasts of the United States and less thoroughly the world at large.

"Tide Tables for the British and Irish Ports," containing "also the times and heights of high water at full and change for the principal places on the globe," by the British Admiralty.

"Tide tables for the Indian Ports," by authority of the Secretary of State for India in Council.

"Annuaire des Marées des Côtes de France," by the French hydrographic service.

"Gezeitentafeln," by the German admiralty. These include daily predictions for several stations in addition to those of the German coast; also intervals and ranges for the world at large.

* E. g., Bache, United States Coast Survey Report, 1862, p. 127 and sketch 46. Cf. Part III, § 56.

† E. g., Van der Stok, Studiën over Getijden in den Indischen Archipel, XII (1895), p. 23 and Kaart I. The longitude, L, is here reckoned from Batavia.

‡ E. g., ibid., p. 31 and Kaart II.

12. The *velocity* (*drift*) of a current is the rate at which the fluid particles move horizontally. It is usually expressed in knots, i. e., nautical miles per hour, but sometimes in feet per second.* The velocity generally differs for different depths, but its value at the surface may be understood unless otherwise specified. The velocity of propagation of the tidal wave is many times greater than the velocity of the current, and the two must not be confounded.

The *direction* (*set*) of a current is the direction or point of the compass toward which the fluid particles move.

The movement of the fluid in one direction, usually inland, is styled *flood*, and in the opposite direction, *ebb*. The two are not always distinct, and, even if they are, it is not always possible to know which movement should be taken for the flood and which for the ebb. Flow or flood and ebb correspond to the French *flot* and *jusant*, while rise and fall correspond to *montant* or *gagnant* and *perdant*.

The maximum of the flood or ebb current is sometimes called the *strength of flood* or *ebb*.

The effect of the tidal wave in giving rise to currents is obvious in two extreme cases:

(1) Where there is a small tidal basin connected with the sea by a large opening.

(2) Where there is a large tidal basin connected with the sea by a very small opening.

In the first case the velocity of the current in the opening will have its maximum value when the tide or height of sea is changing most rapidly, i. e., at a time about midway between high and low water. In other words, the water level in the basin keeps at about the same level as the surface of the water outside. Flood corresponds to the rising and ebb to the falling tide.

In the second case the velocity of the current in the opening will have its maximum value when it is high water or low water without; for then there is the greatest head of water for producing motion. Flood begins about three hours after low water and ebb begins about three hours after high water, and so slack water occurs at times about midway between the tides.

Many currents in nature lie, in a general way, between these two extreme cases; but see §22.

Slack water denotes the state of the current when its velocity becomes a minimum. It follows high- or low-water stand by intervals ranging from zero to three hours, depending upon the locality.† *Change* or *turn of tide* are expressions sometimes used instead of "slack water."

The velocity and direction of tidal currents are much modified by extremely local causes, while the times and heights of the tides are about the same over considerable areas.

13. *Representation of currents, etc.*

The velocity and direction of a current at any given time are often indicated by an arrow. Usually the arrow indicates direction only, the velocity being written just beyond the point. If the currents corresponding to several phases of the tide, or rather tidal current, are shown upon one sheet, several arrows will usually radiate from the same point upon the map. Their numbers indicate the order of occurrence.‡ A *current station* is a point where currents have been observed. Unless the station happens to be in the channel, it is obvious that the rising tide will generally reach and swell the water in the channel before its effect is felt at the station. Similarly the falling tide begins to lower in the channel earlier than in the shallower regions. Hence the order, in time, for the pointing of the radiating arrows is—

Shoreward, upstream, offshore, downstream.

This is evidently clockwise for stations upon the right-hand bank (looking downstream) and counter clockwise for stations upon the left.

For an instantaneous representation of the condition of the currents in a given harbor or region it is customary to make use of *lines of flow*. A line of flow is such a line that at all of its points the motions of the fluid particles coincide with it. In other words, if we draw at each point of the fluid a very short arrow, whose direction indicates the direction of the current at the given instant, then a curve, coinciding with a series of them, is a line of flow.§ At any given

---

*To change velocities given in feet per second to knots per hour, multiply by $\frac{45}{76}=0{\cdot}5921=\frac{1}{1{\cdot}689}$; to statute miles, multiply by $\frac{15}{22}$.

† *Étales de flot et de jusant* vs. *étales de pleine mer et de basse mer*.

‡ For examples see Coast Survey charts, also the Reports; for instance 1879, opp. p. 175 and p. 181.

§ A set of charts for the Irish Sea and English Channel, by Beechy (q. v.), is given in the Philosophical Transactions for 1848.

instant the motion of surface of the water will be represented by a system of curves covering it. If the motion be *steady*, i. e., independent of the time, lines of flow are usually known as *stream lines.*

If across the lines of flow we draw a line cutting the system everywhere at right angles, the line is a *line of equal velocity potential*, or an *equipotential line.* We may assign to one such line any number we please; but having done so, the numbers belonging to other such lines become fixed. Suppose the numbers upon two adjacent lines of equal velocity potential to differ by a small constant quantity $d\phi$. The distance apart of the two lines (ds) becomes known when the velocity is known (and conversely) through the equation

$$ds = -d\phi \div v,$$

or

$$\frac{d\phi}{ds} = -v. \tag{13}$$

Lines of equipotential form a system of curves cutting the system of lines of flow everywhere at right angles.

When the motion is steady and the body of water uniform in depth, the two systems are not only *orthogonal*, but also *isothermal;* that is, if we construct stream lines and equipotential lines, as above directed, we can select stream lines as far apart as are the equipotential lines in the same vicinity, and so divide the whole surface of the water into elementary squares. If the real part of a function of a complex variable represents one of these systems, the purely imaginary part will represent the other. Such a function is defined by the boundary conditions; that is, the function must be such that the stream lines coincide with the fixed boundaries of the fluid.*

Another pair of systems which might be used to represent the motion of the water are *lines of equal velocity* and *lines of equal bearing.* All along a line of equal velocity, the velocity of a current is constant; all along a line of equal bearing the direction or set of the current is constant. These two sets of curves often intersect orthogonally or nearly so. For uniform depth and steady motion the systems are also isothermal.

The map of a body of water may have drawn upon it a series of lines, along any particular one of which the current turns at a given lunar hour. Such lines are called *cocurrent lines;* they are quite analogous to cotidal lines, and, like them, admit of numerous varieties.†

If we are concerned with the current at one station only, the velocities may conveniently be taken as the (positive) ordinates of a curve, the times being the abscissæ. The directions may be written at the feet of the ordinates. At a station where the flood and ebb are distinct, the velocities of the one may be taken as positive and the other negative. This representation is quite analogous to the tidal sheet or marigram.

14. For explaining the origin, propagation, and properties of the tide wave, numerous *theories* are required, according to the circumstances. When the explanation is less complete, or when observation is called in to supplement certain of its defects, the underlying and so-called theory is really only a *working hypothesis.* However, since nobody can hope for theories covering all cases, and since the same theory at one place may serve to explain the tides, while at another place it can serve only as a working hypothesis, we shall follow usage and make the word "theory" cover the expression "working hypothesis."

The (uncorrected) *equilibrium* or *statical* theory assumes that at each instant the surface of the sea is a prolate elipsoid whose longest diameter points at the tidal body. This hypothetical surface is often defined as being one which is everywhere normal to the direction of gravity as perturbed by the tidal body alone.

If the ocean covered the entire earth, the effect upon the direction of gravity of the layer of water constituting the hypothetical tide could be computed. The eccentricity of the equilibrium spheroid, and so the range of tide, would then be somewhat increased.

---

* Bache, United States Coast Survey Report, 1851, pp. 136, 137, and Sketch A, No. 3; the latter represents the currents of Boston Harbor by making the distance between the lines (of flow) inversely proportional to the velocity at the given point. In case of steady motion and uniform depth such lines would be continuous.

† Schott, United States Coast Survey Report, 1854, pp. 168–179, discusses the currents of Long Island Sound. His cocurrent lines are really lines of equal lunicurrent interval. His "lines of direction" differ from lines of flow in that they are taken not exactly simultaneously but at the time of greatest velocity.

The *corrected equilibrium theory* differs from the former in assuming the earth not wholly covered by water, and so the surface of even a deep sea cannot actually coincide with the spheroid of the uncorrected theory, but will be parallel to it the distance therefrom at any given point varying with time. This is necessitated by the incompressible property of water.

The difference between these two theories can be illustrated by means of a small body of water, a lake, or even a pail of water. The uncorrected theory implies that the whole surface of the small body of water rises and falls by the same amount, twice each lunar day. Moreover, this range of tide would be the same as the range of tide in the same latitude were the surface of the earth covered by an ocean. The corrected theory involves the fact that, on the whole, the surface of the small body of water always has the same height, and so its tides are caused by the water at one side being slightly elevated while in another portion it is slightly depressed. But the surface is normal to disturbed gravity, or parallel to the uncorrected tidal spheroid. The cotidal lines will radiate from a *no-tide point* instead of being arcs of terrestrial meridians as in the case of the uncorrected theory.

The equilibrium theories assume that the water surface arranges itself in each locality normal to the force of disturbed gravity, but they do not explain how this arrangement is made, nor whether it is possible with the known properties of water. They avoid altogether the question of depth of the water, the surface alone being considered.

Laplace attempted a theory in which not only the disturbing or tidal forces, but also the motion of the water regarded as a heavy or inert body, are taken into account. Such theories are known as *dynamic* or *kinetic*. They should take account of the viscosity or internal friction of the water as well as the friction at the bounding surfaces.

The *wave theory* considers the tide as a wave and develops the properties of such motions. From the nature of the case it is a kinetic theory.

The uncorrected equilibrium theory is useful as a working hypothesis in tidal analysis because it enables one to infer suitable forms of expression for the tidal disturbances, knowing the laws of the forces to which they are due. The principle that the disturbances are coperiodic with the forces, whether the tide approach its equilibrium condition or not, is a deduction of dynamics.

The corrected equilibrium theory applies to small, deep bodies of water.

The kinetic theory enables one to infer that the amplitude of tidal oscillations having sensibly equal periods are to one another as are their forces, and that their epochs are equal.

The wave theory is applicable to canals or tidal rivers.

MISCELLANEOUS TIDAL PHENOMENA.

15. In shallow estuaries where the range of tide is considerable, the high water is propagated inward faster than the low water, for at high water the greater depth prevails. The high water thus gaining upon the low water causes the duration of rise of tide to become shorter as the wave proceeds; and so the farther the wave goes without breaking, the more abrupt its front becomes. Finally, it becomes so steep that the top of the wave falls forward (not in the middle of the stream but near the shelving shores) something like the crest of a breaker. This phenomenon, usually accompanied by much noise, is called a *bore*. Other names for the bore, boor, or boar's head are *eager* (England), *mascaret* or *barre* (France), *prororoca* or *pororoca* (Brazil). The following rivers and arms of the sea have bores: The Amazon,* Tsien-tang,† Brahmaputra, Ganges, Hooghly, Indus, Garonne, Dordogne, Seine, Trent, Severn, and Wye rivers, Solway Frith; arms or bays at the head of the Bay of Fundy, and perhaps Magellan Strait and Cook Inlet.‡

An *agger* is a double-headed tide; that is, a tide having two maxima or two minima instead of the usual high or low water.§ This gives to the tide a long "stand," and so may be of much practical value. At Southampton there is a double high water, at Portland a double low water,

* J. C. Branner, Pop. Sci. Monthly, Vol. 38 (1890), pp. 208–215.

† See figure 19.

‡ For tidal diagrams of French rivers, see Comoy, Étude Pratique sur les Marées Fluviales.
See Airy, Tides and Waves, Art. 514; also this manual under Alexander the Great, Strabo, Hakluyt, and Sturmy.

§ Cf. Airy, Tides and Waves, Art. 518, and Ferrel, Tidal Researches, § 254.

and at Havre an almost double high water.* This peculiarity of the tide does not generally persist throughout the lunation. It is usually, but not always, the most pronounced at spring tide.

At some places the high and low waters may be very sharp, thus making a stand of short duration. The high waters at Ipswich and the low waters at Philadelphia may be mentioned as cases of this kind.†

Whenever the tidal water has to pass through a rather narrow or shallow channel to fill a tidal reservoir beyond, a strong current is necessitated. This is sometimes called a *race*; e. g., the Race at the eastern entrance to Long Island Sound. Of course each of the two bodies of water connected by the strait may be tided; e. g., the Hell Gate, Messina Strait. But a tidal race is more properly defined as a strong current caused by the meeting of two wave systems from different or opposite directions. The effect will be the greatest where the range of tide is most diminished by this meeting; that is, at a place where trough meets crest, as can be seen by a brief study of the water particles in wave motion (Chapter II). The Portland Race, the Maelstrom, and Seymour Narrows may be instanced.

16. *Seiches* (sāsh) are short-period oscillations (usually from about 10 to 60 minutes) existing at times in many (if not all) lakes and landlocked bays. They represent oscillations in which usually the whole body of the liquid swings to and fro. They are caused by sudden changes of atmospheric pressure, or winds which sweep over its surface. The period of such a seiche is

$$\frac{\text{twice length of lake}}{\sqrt{gh}} \tag{14}$$

where g denotes the acceleration due to gravity, and h the depth of the lake or bay.

Seiches may not always be uninodal, as supposed above, nor does the nodal line always run transversely to the body of water.

This phenomenon has been observed on Lakes Geneva, Constance, Ontario, Michigan, Cazenovia (N. Y.), and others; on bays in India; at Swansea (Wales), Malta (Greece), and Bristol (R. I.).‡

The effect of an earthquake upon the sea is known as an *earthquake wave*, an *earthquake sea* (or *ocean*) *wave*, or a *great sea wave*. The last term serves to distinguish it from the corresponding oscillation in the solid earth which is known as a *great earth wave*. The great sea wave may sometimes, perhaps, be due to a tumbling down of submarine cliffs instead of to an earthquake proper.

The effect of these waves is often transmitted to distant shores, where it is recognized (although not always with absolute certainty) by the peculiar oscillations which it adds to the record of an automatic or self-registering tide gauge. Peru, Japan, and Malay Archipelago have furnished notable instances of this phenomenon.

---

*See figure 18.

For tidal diagrams, Phil. Trans., 1843, opp. p. 46, and Comoy, op. cit.

To ascertain from the harmonic constants the natures of the high and low waters at a given place, draw a curve, as in § 63, Part III, consisting of M_2 and its harmonics M_4, M_6, M_8, ...

In computing the mean range of tide the second portion of formula (65), Part III, should not, perhaps, be used, but rather a value obtained from the drawing just mentioned.

†Phil. Trans., 1843, opp. p. 52. See figure 11.

‡The following are a few references to this phenomenon:

C. B. Comstock, Annual Report of the Survey of the Northern and Northwestern Lakes, 1872, pp. 14–16 and Pl. VI.

Airy, Phil. Trans., 1878, pp. 136–138.

Günther, Geophysik, Vol. II (1885), pp. 373–376.

Nature, Vol. 14 (1876), p. 164; Vol. 17 (1878), pp. 234, 281; Vol. 18 (1878), pp. 100, 101; Vol. 19 (1879), p. 446; Vol. 21 (1880), pp. 397, 443; Vol. 33 (1885), p. 184.

Science, Vol. 7 (1886), p. 412; Vol. 15 (1890), pp. 99, 117.

CHAPTER II.

DIGRESSION ON PLANE, OR TWO-DIMENSIONAL, WATER WAVES.

17. *Fundamental equations.*

A more exhaustive account of fluid motion will be given in Part IV. In the present chapter the assumptions made are few and simple. The main object is to give an introduction to the study of wave motion, which shall clearly indicate how the water particles behave according to theory, and which shall also show some applications of the results obtained to the water movements in nature.

By taking the displacement equations (26), (27), and the equation (28) for granted, several of the paragraphs on wave motion can be understood without reading the present paragraph.

In any motion of a fluid, the entire volume taken into consideration must not be altered. That is, if we assume any small mass of the fluid bounded by an imaginary surface to be slightly displaced in the motion, its volume will remain as before; or if we assume an imaginary surface fixed in the fluid and inclosing a small mass or volume of it, the amount contained in this surface will be constant, whatever the motion of the fluid, provided only that the surface remain entirely submerged.

We shall assume that all motions take place in or parallel to the vertical plane xy, and, for convenience, that the thickness (z) of the body of water treated is unity. Then, considering an imaginary rectangular boundary whose edges are dx, dy, in length, and letting u, v denote velocities along x, y, the difference between the entire quantity flowing into and out of this boundary which is supposed to be stationary is, obviously,

$$\left(u + \frac{\partial u}{\partial x}\,dx\right)dy - u\,dy + \left(v + \frac{\partial v}{\partial y}\,dy\right)dx - v\,dx.$$

This is equal to zero, because as much flows in as out;

$$\therefore \frac{\partial u}{\partial x} + \frac{\partial v}{\partial y} = 0 \tag{15}$$

is the equation of continuity.

In using this equation it is to be remarked that x, y are the true coordinates of the particle, whereas in the work about to be given x, y are the coordinates of the particle when in its undisturbed condition. The true coordinates are $x + \mathbf{x}$, $y + \mathbf{y}$.

To find the equation of continuity in terms of small displacements $\mathbf{x}$, $\mathbf{y}$ instead of u, v, assume that the elementary rectangle whose corners had originally the coordinates

$$0, 0 \quad dx, 0 \quad dx, dy \quad 0, dy$$

becomes so altered by the motion that the coordinates of the corners are

$$\begin{Bmatrix} \mathbf{x} \\ \mathbf{y} \end{Bmatrix} \quad \begin{Bmatrix} \mathbf{x} + \frac{\partial \mathbf{x}}{\partial x}\,dx + dx \\ \mathbf{y} + \frac{\partial \mathbf{y}}{\partial x}\,dx \end{Bmatrix} \quad \begin{Bmatrix} \mathbf{x} + \frac{\partial \mathbf{x}}{\partial x}\,dx + \frac{\partial \mathbf{x}}{\partial y}\,dy + dx \\ \mathbf{y} + \frac{\partial \mathbf{y}}{\partial x}\,dx + \frac{\partial \mathbf{y}}{\partial y}\,dy + dy \end{Bmatrix} \quad \begin{Bmatrix} \mathbf{x} + \frac{\partial \mathbf{x}}{\partial y}\,dy \\ \mathbf{y} + \frac{\partial \mathbf{y}}{\partial y}\,dy + dy. \end{Bmatrix}$$

Let the small change among neighboring particles be such that the elementary rectangle becomes a parallelogram whose sides are approximately parallel to those of the rectangle; its area is approximately equal to

$$\left(1 + \frac{\partial \mathbf{x}}{\partial x}\right)\left(1 + \frac{\partial \mathbf{y}}{\partial y}\right)dxdy.$$

Since this must be equal to $dxdy$, it follows that

$$\left(1+\frac{\partial \mathbf{x}}{\partial y}\right)\left(1+\frac{\partial \mathbf{y}}{\partial y}\right)=1, \tag{16}$$

or

$$\frac{\partial \mathbf{x}}{\partial x}+\frac{\partial \mathbf{y}}{\partial y}=0, \tag{17}$$

provided $\frac{\partial \mathbf{x}}{\partial x}\cdot\frac{\partial \mathbf{y}}{\partial y}$ may be neglected, as is the case when each factor is small. Either (16) or (17) is the equation of continuity, the former being, of course, the more accurate;

$$\therefore\quad \mathbf{y}=-\int_{y=b}^{y=y}\frac{\partial \mathbf{x}}{\partial x}dy+\text{a function of } x, \tag{18}$$

where b denotes the height of the bottom. If Ξ denotes the value of the displacement $\mathbf{x}$ at the bottom, the corresponding value of $\mathbf{y}$ is

$$\mathbf{y}=\Xi\frac{db}{dx}; \tag{19}$$

and since at the bottom where $y=b$ the integral is zero, it follows that this is the required function of x;

$$\therefore\quad \mathbf{y}=-\int_{y=b}^{y=y}\frac{\partial \mathbf{x}}{\partial x}dy+\Xi\frac{db}{dx}. \tag{20}$$

The last term becomes zero for a horizontal bottom.

If the motion be such that all particles once in a vertical line always remain so, $\mathbf{x}$ can be replaced by ξ, which is its surface value, and we may take as elementary area a rectangle whose length is $dx+\frac{\partial \xi}{\partial x}dx$ and whose height is $h+\eta$, a much larger quantity. The area must remain $h\,dx$.

$$\therefore\left(1+\frac{d\xi}{dx}\right)\left(1+\frac{\eta}{h}\right)=1 \tag{21}$$

is the equation of continuity, in this case.

The dynamical or pressure equation is

$$\frac{\partial^2 \mathbf{x}}{\partial t^2}=X+\frac{\partial}{\partial x}\left\{-g\eta-\int_{y=y}^{y=h}\frac{\partial^2 \mathbf{y}}{\partial t^2}dy\right\}, \tag{22}$$

in which η denotes the value of $\mathbf{y}$ where $y=h$, the undisturbed depth, and X denotes the intensity of any impressed force acting in the x-direction.

Since x does not vary with t, the value of $\frac{\partial^2(x+\mathbf{x})}{\partial t^2}$ is $\frac{\partial^2 \mathbf{x}}{\partial t^2}$, which is the acceleration (or effective force per unit mass due to the horizontal motion) in the x-direction. This must be the result or the equivalent of the x-component of all other forces connected with the motion.

$g\eta$ is the disturbing pressure due to height reckoned from the undisturbed surface, and so the partial x-derivative of $-g\eta$ is the corresponding accelerating force in the x-direction.

$\frac{\partial^2 \mathbf{y}}{\partial t^2}dy$ is, since weight or mass is proportional to dy, an element of the pressure due to the vertical velocity of an elementary mass above the point x, y. The aggregate pressure is the same integrated up to the surface, and the corresponding accelerating force is minus the partial

x-derivative. In this integration it is allowable to take the upper limit as h, instead of the slightly different value $h + \eta$, because the vertical acceleration $\frac{\partial^2 \mathbf{y}}{\partial t^2}$ is assumed to be a moderately small quantity.*

If $X = 0$, the motion of the body is "free," not "forced;" i. e., the body is left to itself.

If the vertical acceleration can be omitted, the water must so move as to keep all particles which lie in a given vertical line, always in a vertical line. If the area be divided into elementary vertical strips of length dx and height $h + \eta$, the elementary volume of water, $dx \times (h + \eta) \times 1$, varies with the instantaneous height; and so the force equivalent to the effective force in the moving element must likewise vary,

$$\therefore \frac{\partial^2 \mathbf{x}}{\partial t^2} = \frac{h + \eta}{h}\left(X - g\frac{\partial \eta}{\partial x}\right) \tag{23}$$

making use of the corresponding equation of continuity and putting $X = 0$, we have

$$\frac{\partial^2 \mathbf{x}}{\partial t^2} = gh\frac{\frac{\partial^2 \mathbf{x}}{\partial x^2}}{\left(1 + \frac{\partial \mathbf{x}}{\partial x}\right)^3}; \tag{24}$$

which becomes, if $\frac{\delta \mathbf{x}}{\partial x}$ is small, or if the relative displacement of two neighboring elements of the fluid is small in comparison with the distance between them,

$$\frac{\partial^2 \mathbf{x}}{\partial t^2} = gh\frac{\partial^2 \mathbf{x}}{\partial x^2}. \tag{25}$$

WAVES IN A CANAL OF UNIFORM DEPTH AND INDEFINITE LENGTH.

18. It is here proposed to give an interpretation of the wave motion defined by the following equations, and to point out how the long or tidal wave differs from the short, oscillatory, or surface wave.

Let us assume that the horizontal and vertical displacements of the fluid are of the respective forms, †

$$\mathbf{x} = A \cosh ly \sin (at - lx + \alpha) \tag{26}$$

$$\mathbf{y} = A \sinh ly \cos (at - lx + \alpha), \tag{27}$$

where A, a, α, l are constant throughout the canal and for all time; x, y are independent of the time but vary from point to point, x being measured horizontally from an arbitrary origin, and y vertically from the bottom of the canal. These evidently satisfy the equation of continuity (17); they also satisfy the dynamical equation (22) provided

$$\tanh lh = \frac{a^2}{gl}, \tag{28}$$

or

$$a^2 = gl \tanh lh. \tag{29}$$

Equations (17), (22) imply that $\mathbf{x}$ and $\mathbf{y}$ are small in comparison with the wave's length and the depth of the water, respectively. The motion defined by (26), (27) is periodic in time and distance. Any increase of time, accompanied by a proper increase of distance, leaves $\mathbf{x}$, $\mathbf{y}$ unaltered, showing that the wave motion represented advances uniformly along x increasing, the velocity being $\frac{a}{l}$. The motion represented is evidently such that similar terms involving $2at$, $3at$, etc., may be disregarded.

---

*$\frac{\partial^2 \mathbf{x}}{\partial t^2} = X - \frac{1}{\rho}\frac{\partial p}{\partial x}$,

where p denotes the intensity of pressure per unit area at a given point; ρ the density of the fluid, i. e., its mass per unit volume, and which may be taken as unity.

† For definitions and numerical values of hyperbolic functions, see Table 46.

19. *Deductions from* (26), (27).

The horizontal and vertical component oscillations (displacements) of any given fluid particle are each simple harmonic functions of the time, and of like periods. Eliminating the angle involving t, we have

$$\frac{x^2}{A^2 \cosh^2 ly} + \frac{y^2}{A^2 \sinh^2 ly} = 1, \tag{30}$$

showing that any particle whose (undisturbed) height above the bottom is y describes an ellipse whose major and minor semi-axes are $A \cosh ly$ and $A \sinh ly$. Consequently the foci are distant $A\sqrt{\cosh^2 ly - \sinh^2 ly} = A$, from the center of the ellipse. As this distance is independent of both x and y, it is the same for the orbit of *any* particle in the fluid mass; i. e., the two foci of any ellipse are $2A$ apart and lie in a horizontal line.

[It may be noted, although it is not important for the present purpose, that the law of description is precisely the same as that of a body revolving about a central force whose intensity increases directly with the distance of the body from the center.]

Let x be constant in equations (26), (27). Since the angle $at - lx + \alpha$ does not involve y, it is obvious that particles originally in the same vertical line are, at any given instant, in the same phase of either the vertical or the horizontal oscillation (displacement). In this respect the motion of a vertical filament of water somewhat resembles that of a stalk of wheat swaying to and fro in the wind.

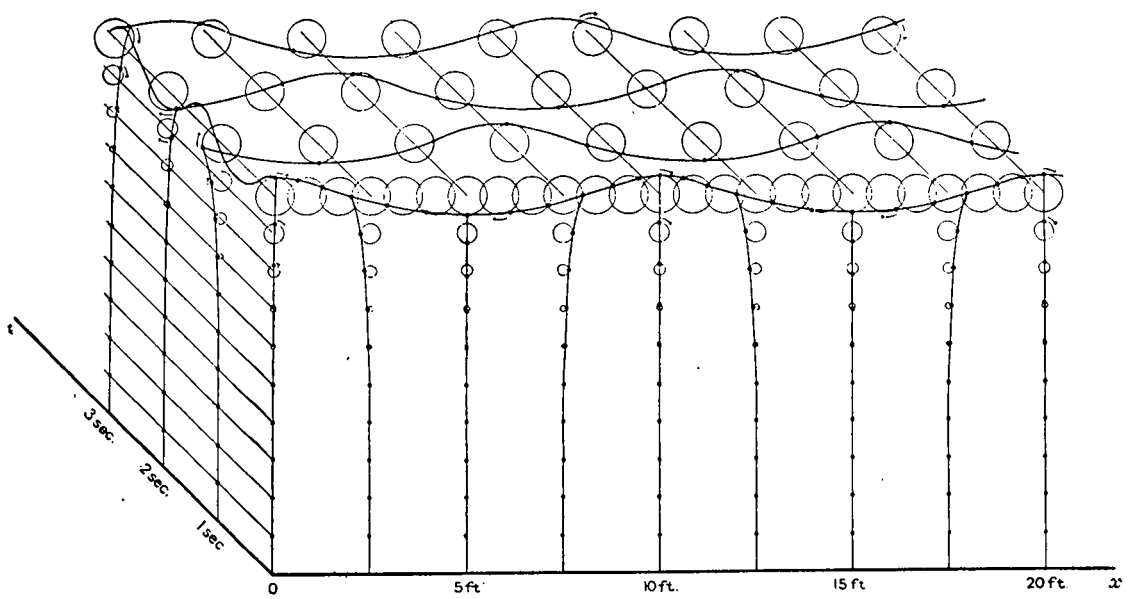

Fig. 2. For illustrating wave motion.

20. Figure 2 illustrates the wave motion in a vertical section of water, the wave being propagated in the direction Ox. This is not a view of a three dimensional volume of water, but consists of a series of instantaneous views of the same plane; the times at which the views are supposed to be taken are, as indicated upon an arbitrary time axis t, 0, 1, 2, and 3 seconds, respectively.

The orbit of any given particle is fixed; i. e., is the same for all values of t; but the particle itself occupies different positions as t varies. In other words, it describes the orbit and in the direction (clockwise) indicated by the arrow. The orbits which are sufficiently far from the bottom to be shown in the figure, are, very nearly, circles. The wavy line having its axis parallel to the t-axis is a view showing how the height of the surface (at $x=0$) changes as t varies. In other words, it is a view of what would be traced upon a self-registering apparatus at the locality $x=0$.

Of course, the scale in which time along the t-axis is reckoned is arbitrary. The instantaneous wave profiles are the wavy lines parallel to the x-axis; they approximate closely to curves known as curtate cycloids.

To obtain such a curve, let a series of circles be uniformly distributed along a horizontal line; take a point on each a constant angular distance from the position of the point on the adjacent circle to the left, say; join the points thus obtained.

In order that the cycloid be curtate, it is necessary that the common distance between the centers of the circles be greater than the arc subtending the constant angular distance just referred to.

The wavy line parallel to the t-axis differs from the wave profiles only that the abscissæ may be drawn to a different scale.

21. Let us now return to equations (26), (27). If in these two equations we assume two of the coordinates t, x, y to be constant while one is variable, equations (26), (27) are the two equations of a displacement curve, the non-constant coördinate being the variable parameter. (Or, if we eliminate this variable parameter, an equation in $\mathbf{x}$, $\mathbf{y}$ is obtained.) This locus must be such that if we proceed along the t-, x-, or y-axis, as the case may be, the successive displaced particles must fall upon it; the ($\mathbf{x}$, $\mathbf{y}$)-origin is supposed to coincide with the undisturbed position of any particle along the axis in question.

By supposing t and x constant, equations (26), (27) represent an hyperbola; or, eliminating y, we obtain the single equation

$$\frac{\mathbf{x}^2}{A^2 \sin^2 (at - lx + \alpha)} - \frac{\mathbf{y}^2}{A^2 \cos^2 (at - lx + \alpha)} = 1. \tag{31}$$

By supposing y and t constant, equations (26), (27) represent an ellipse. As x increases the ellipse is described counterclockwise.

These equations likewise represent an ellipse when y and x are constant. As t increases the ellipse is described clockwise. In either case the resultant equation is

$$\frac{\mathbf{x}^2}{A^2 \cosh^2 ly} + \frac{\mathbf{y}^2}{A^2 \sinh^2 ly} = 1. \tag{32}$$

Now regarding x (or t) as the parameter of a system of curves, equation (31) represents a system of confocal hyperbolas—the foci being $2A$ asunder. Similarly regarding y as the parameter, equation (32) represents a system of confocal ellipses. These ellipses and hyperbolas are bi-confocal and constitute a pair of orthogonal and isothermal systems. When the ellipses are circles, the hyperbolas become radiating straight lines.

To see the system of displacement ellipses (circles) in the figure, drop all orbits which are in the same vertical line to the bottom of the canal; they will then have a common center. The nearly vertical line joining any originally vertical series of particles becomes an hyperbola (radial line) cutting the ellipses (circles) at right angles.

[If we put

$$x' = at - lx + \alpha, \quad y' = ly,$$
$$z' = x' + iy', \quad Z = \mathbf{x} + i\,\mathbf{y},$$

then (26), (27), are equivalent to the single equation

$$Z = A \sin z' \tag{33}$$

But if the x' y' plane or the x y-plane be divided into a system of squares by means of lines parallel to the coördinate axes, they become in the $\mathbf{x}$ $\mathbf{y}$-plane by the transformation (33), the confocal system of ellipses and hyperbolas already described.]

22. A wave whose length is several or many times the depth of the water, is called a *long wave.* Such waves form a limiting case of wave-motion in water defined by the displacements (26) and (27). The other limiting case being that of *surface* or *short* waves, whose character is shown in Fig. 2. For a long wave, ly is a small quantity, and so $\cosh ly \doteq 1$, $\sinh ly \doteq ly$,

$$\mathbf{x} = A \sin (at - lx + \alpha), \tag{34}$$
$$\mathbf{y} = A\, ly \cos (at - lx + \alpha). \tag{35}$$

From (34) we see that, to quantities of the second order, the horizontal displacements are the same for all depths of the liquid inasmuch as y is not involved. That is, the water must move to and fro as if divided up into vertical slices. The expression for $\mathbf{y}$ shows that the vertical displacements increase as the distance from the bottom increases.

The orbits of the particles are the extremely elongated ellipses having as their equation

$$\frac{\mathbf{x}^2}{A^2}+\frac{\mathbf{y}^2}{A^2 l^2 y^2}=1. \tag{36}$$

They have a constant major axis at all depths, but the minor is proportional to the depth taken. At the surface the amplitude (η) of the rise and fall (tide) is lh times the amplitude of horizontal displacement (current).

The *velocity* of the fluid particles is

$$\dot{\xi}=\frac{d\xi}{dt}=Aa\cos(at-lx+\alpha); \tag{37}$$

$$\therefore \dot{\xi}/\eta=\frac{a}{lh},=\sqrt{\frac{g}{h}}, \tag{38}$$

as follows from (28), (34), and (35).

Example.—When the height of the (rising) tide from mean water level is 2 feet, in a long tidal river 30 feet deep, the velocity is $2\times\sqrt{\frac{g}{h}}$ or 2·07 feet per second (flood).

The maximum flood velocity occurs at the time of high water, and the maximum ebb velocity at the time of low water. Slack water occurs at the time of mean water level. From Fig. 2 it is readily seen that the particles of water in a wave surface may, at certain portions of the wave period, be actually flowing up hill. This is one of the most obvious ways of detecting wave motion.

Experience shows that the motion of the water in tidal rivers which are not abruptly terminated, is well represented by the wave motion here considered. For in such cases reflection can alter the wave but slightly.

If two waves of like periods and moving in opposite directions be superposed, the result will depend upon the manner of the incidence. If high water falls upon high water the range of the wave will be increased, while the velocity of the current may be reduced to almost zero (see Fig. 2). For, the particles at high water in each wave move in the direction of wave propagation, and so the resultant motion is perhaps zero. If a high water fall upon a low water, the range of the wave may be almost reduced to zero while the current will have its velocity increased.

West of the Isle of Man the cotidal hour is about ten, whether the tide comes from the north or from the south. The consequence is that the velocity of the current is small.

23. a denotes the number of degrees by which the phase of the component displacements of any particle is altered in a unit of time. When the orbit of the particle is circular, a denotes its angular velocity.

$$\therefore \frac{360^\circ}{a}=\tau \tag{39}$$

where τ is the periodic time of the particle or of the wave.

l denotes the number of degrees by which the phases of the component displacements of two particles differ—the centers of their orbits being unit distance apart. (See Fig. 2.)

$$\therefore \frac{360^\circ}{l}=\lambda, \text{ or } l=\frac{360^\circ}{\lambda} \tag{40}$$

where λ is the length of the wave (in feet). 360° should of course be replaced by 2π if we wish to reckon l in radians.

$$\therefore \frac{a}{l}=\frac{\lambda}{\tau}=\text{velocity of the wave.} \tag{41}$$

This is independent of the amplitude.

From (29) we have

$$\tau^2 = \frac{2\pi\lambda}{g} \Big/ \tanh\frac{2\pi h}{\lambda}.^{*} \tag{42}$$

When $\frac{h}{\lambda} \overset{=}{>} 1$,

$$\text{Period (seconds)},\ \tau, \doteq \sqrt{\frac{2\pi\lambda}{g}}, \doteq \frac{4}{9}\sqrt{\lambda},^{\dagger} \tag{43}$$

$$\text{Velocity (feet per second)},\ \frac{\lambda}{\tau}, \doteq \sqrt{\frac{g\lambda}{2\pi}}, \doteq \frac{9}{4}\sqrt{\lambda}, \text{ or } \frac{g\tau}{2\pi}. \tag{44}$$

$\frac{9}{4}$ feet per second $= \frac{4}{3}$ nautical miles per hour $= 1.53$ statute miles per hour. [The period of a wave whose length is λ is $(2\pi)^{\frac{1}{2}}\sqrt{\frac{\lambda}{g}}$, while the (complete) period of a pendulum whose length is λ is $\pi\sqrt{\frac{\lambda}{g}}$.]

When $\frac{h}{\lambda}$ is several times smaller than unity

$$\text{Period},\ \tau, \doteq \frac{\lambda}{\sqrt{gh}}, \doteq 0{\cdot}176\,\frac{\lambda}{\sqrt{h}}. \tag{45}$$

$$\text{Velocity},\ \frac{\lambda}{\tau}, \doteq \sqrt{gh}, \doteq 5{\cdot}67\sqrt{h}. \tag{46}$$

5·67 feet per second $=$ 3·36 nautical miles per hour $=$ 3·87 statute miles per hour. The equation $v = \sqrt{gh}$ is known as Lagrange's formula.

From (43) and (44) it follows that the period and velocity of short waves in deep water vary as the square root of the wave length and are independent of depth of the water.

From (46) it follows that the velocity of a wave very long compared to the depth of the water (as is the free tidal wave) varies as the square root of the depth, and is independent of the wave length.

24. *Equations of the wave profile.*

Let ν denote the number of wave lengths (not necessarily an integral number) from the origin of coördinates to the undisturbed point; then for the x we have

$$x = \nu\lambda;$$

and for the true x or the x of the disturbed point,

$$x = \nu\lambda + \mathbf{x} = \nu\lambda + A\cosh lh \sin(at - 2\pi\nu + \alpha); \tag{47}$$

also, for the true y,

$$y = h + \mathbf{y} = h + A\sinh lh \cos(at - 2\pi\nu + \alpha). \tag{48}$$

By so taking the origin that $at + \alpha = 0$ and writing θ for $2\pi\nu$, we have

$$x = \frac{\lambda}{2\pi}\left(\theta - \frac{2\pi}{\lambda}A\cosh lh \sin\theta\right), \tag{49}$$

$$y - h = \frac{\lambda}{2\pi}\left(\frac{2\pi}{\lambda}A\sinh lh \cos\theta\right). \tag{50}$$

---

* See Tables I, II, III of Airy's Tides and Waves; or, Tables 47, 48, 49 this manual.

† Cf. Newton's Principia, Bk. III, Props. 44–46.

Now $l = \frac{2\pi}{\lambda}$; and so for water deep in comparison with λ, cosh lh and sinh lh are sensibly equal ($\doteq \frac{1}{2}e^{lh}$).

For this reason we may write

$$x = \frac{\lambda}{2\pi}(\theta - m \sin \theta), \tag{51}$$

$$y - h = \frac{\lambda}{2\pi} m \cos \theta. \tag{52}$$

These are the equations of a curtate cycloid (or a trochoid) whose generating wheel, of radius $\frac{\lambda}{2\pi}$, rolls below a line distant $\frac{\lambda}{2\pi}$ above the surface of repose, or $h + \frac{\lambda}{2\pi}$ above the bottom; m is the fraction of the radius from the center to the tracing point. For curves below the surface, h expressed or implied in the above equations should be replaced by y' where y' denotes the height of any surface of repose above the bottom.

In Fig. 2, $\lambda = 10$ feet, $h = 10$ feet, A cosh $lh = 0{\cdot}5$ foot, $\frac{\lambda}{2\pi} = 1{\cdot}6$ feet, which is the radius of the generating circle, and $m = 0{\cdot}314$.

For waves which are long in comparison with the depth, cosh $lh \doteq 1$, and sinh $lh = lh$, so that the equations for the wave profile are

$$x = \frac{\lambda\theta}{2\pi} - A \sin \theta, \tag{53}$$

$$y = h + Alh \cos \theta. \tag{54}$$

Now if the amplitude of the x-displacement (A) be small in comparison with λ, these two equations represent a very flat cosine curve.

25. *Distinction between ordinary and tidal waves.*

The following characteristics are deductions from the preceding paragraph on wave motion in canals.

Short waves.	*Long or tidal waves.*
[The depth of the water is supposed to exceed the length of the wave, and the rise to be several times less than the wave length.]	[The depth of the water is supposed to exceed, by a considerable amount, the rise and fall of the tide, and the length of the wave to much exceed the depth of the water.]
Particles move in ellipses which are very nearly circles at the surface.	Particles move in ellipses approaching horizontal straight lines.
The horizontal and vertical displacements of the particles diminish rapidly below the surface.	The horizontal displacements of the particles are about the same at the bottom as at the surface; the vertical displacements are proportional to the heights of the particles above the bottom.
Particles originally in the same vertical line are, at any given instant, in the same phase of oscillation.	Particles once in the same vertical line remain so for a long time.
The wave profile approaches a curtate cycloid.	The wave profile approaches a cosine curve.
The marigram, or record of a self-registering gauge, is a curtate cycloid or a projection of one.	The marigram, or record of a self-registering gauge, is a cosine curve.
The period or wave length assumed, the other becomes fixed, regardless of the depth of the water or the rise and fall of the surface.	Two of the quantities period, wave length, and depth of water, assumed, the remaining one becomes fixed, regardless of the rise and fall of the surface.
The velocity of propagation depends upon the wave length only.	The velocity of propagation depends upon the depth only.

Some characteristics not deduced from the preceding paragraph, but rather from observation, are added here:

Wind waves.	*Tidal waves.*
The period of a short wave at a given place depends upon the velocity, continuance, and (in limited bodies of water) direction of the wind.	The period of a tidal oscillation does not depend upon the given place, but upon the astronomical forces to which it is due.
The amount of rise and fall at a given place depends upon the velocity, continuance, and direction of the wind.*	The amount of rise and fall of the tide at a given place depends upon, or rather varies with, the direction, and intensity of the astronomical forces to which the tide is due.
Wind waves do not arise unless the velocity of the wind exceed a certain value — 0·45 miles per hour for capillary waves, 2 miles for gravity waves.†	Tidal oscillations of like periods are very nearly proportional to the disturbing causes, however small these latter may be.
The period, as well as the amount of rise and fall, may vary rapidly from place to place, as can be seen in passing around a breakwater.	The period is fixed the world over; the amount of rise and fall changes slowly from place to place.
Wind waves are much confused, and their period uncertain.	Tidal waves recur with remarkable regularity.
Wind waves are soon destroyed by the viscosity of the water.	Tidal waves move on as free waves through long distances.
Storm waves at sea (wind 30 or 40 knots) have a rise and fall of 15 or 20 feet, a period of about 10 seconds, and, by (43), a length of about 500 feet.‡	The rise and fall of the tide at sea is, by the equilibrium theory about 1·8 feet × (cosine of latitude)²§ and the length of the tidal wave is hundreds, or even thousands, of miles.

26. *Ordinary water waves compared with polarized light.*

Imagine the orbits of the surface particles to be not in the plane of the paper as shown in Fig. 2, but perpendicular to it, the centers of the orbits still occupying their former positions, and so lying upon the same horizontal straight line.

Suppose these orbits circular, and suppose the particles to move clockwise if we look from 0 toward $+x$, the polarization is circular and right-handed; if the particles move in the opposite direction, it is left-handed. In either case the particles will lie upon a helix or screw. The shadow of these points upon the horizontal plane, or upon a plane parallel to the plane of the paper, will represent a beam of plane polarized light. A circularly polarized beam is well illustrated by sticking large-headed pins into a wooden pencil so that their heads lie upon a helix, and then rotating the pencil uniformly upon its axis. The shadow of this shows the wave motion in plane polarized light.

When the orbits of the particles are ellipses, they will represent elliptically polarized light, while the shadows or projections represent plane polarized light.

27. *Long water waves compared with sound.*

The horizontal displacement ξ now represents the longitudinal displacement of the particles constituting the medium through which sound is propagated. Because η is proportional to $-\frac{\partial \xi}{\partial x}$, it is proportional to the variation in pressure at a given time at any given cross-section (and so to the variation in density) due to the motion. Where $\frac{\partial \eta}{\partial x}$ (or $\frac{\partial^2 \xi}{\partial x^2}$) $= 0$, there is a maximum or a minimum. In water waves the values of x satisfying $\frac{\partial \eta}{\partial x} = 0$ are evidently the points of high and

* According to an item published in Van Nostrand's Eng. Mag., Vol. 24 (1881) p. 36, rise and fall in meters $= \frac{1}{4} v^2$, v being the velocity of the wind in meters. The rule is probably due to Coupvent Desbois. See Günther, Geophysik, Vol. II, p. 378.

† Lamb, Hydrodynamics, §§ 246, 303. Russell, Report B. A. A. S., 1837, p. 455.

‡ This length is probably too great. Russell, Report B. A. A. S., 1837, pp. 446 et seq. W. Walker, ibid., 1842 (II), pp. 21, 22. Captain Stanley, ibid., 1848, pp. 38, 39. W. Scoresby, ibid., 1850 (II), pp. 26–31. C. W. Merrifield, ibid., 1869, pp. 32, 33. Günther, Geophysik, Vol. II, p. 378. R. Abercromby, Phil. Mag., Vol. 25, 1888, pp. 263–269. Theodore Cooper, Trans. Am. Soc. of Civil Engineers, Vol. 36 (1896), pp. 139 et seq.

For velocity of propagation, see Stokes, Mathematical and Physical Papers, Vol. II, pp. 239, 240.

§ See § 47. At Honolulu, Hawaiian Islands, the mean range is 1·2 feet; at Easter Island, 2·2 feet; at St. Helena Island, 2·1 feet; at Ascension Island, 1·4 feet. But it is not to be inferred from these values that the tides in extended oceans are in any way explained by the uncorrected or corrected equilibrium hypothesis.

low water at the assumed time. To see how the horizontal projections of fluid particles are crowded together (like a condensation of a sound wave) at the high waters, and drawn apart at the low waters, we may even make use of Fig. 2. Take the front row of surface particles and project them upon the x-axis, remembering that the displacements (ξ) must be regarded as small in comparison with the length of the wave.

28. *On the reflection of plane water waves.*

The displacements in an infinite fluid are

$$\mathbf{x} = A \cosh ly \sin (at - lx + \alpha),$$
$$\mathbf{y} = A \sinh ly \cos (at - lx + \alpha).$$

Now interpose a vertical barrier where $x = L$, and the displacements of the reflected wave will be

$$\mathbf{x}_r = -A_r \cosh ly \sin [at - l(2L - x) + \alpha], \tag{55}$$
$$\mathbf{y}_r = A_r \sinh ly \cos [at - l(2L - x) + \alpha]. \tag{56}$$

That is, horizontal motions after reflection change their direction, while vertical motions do not. This can be easily seen because the reflection is really due to the horizontal motion. $\mathbf{x}_r$, $\mathbf{y}_r$ being simple harmonic displacements of the same periods as $\mathbf{x}$, $\mathbf{y}$, they combine with the latter to alter the phase of the wave at a given time and place (cf. §9).

Let us now suppose a complete reflection to take place so that the amplitude of the reflected portion should, if conditions permitted, be as great as the amplitude of the original wave.

Let $x' = x - L$ and $\alpha' = \alpha - lL$; then

$$\mathbf{x} = A \cosh ly \sin (at - lx' + \alpha'),$$
$$\mathbf{y} = A \sinh ly \cos (at - lx' + \alpha'),$$

$$\mathbf{x}_r = -A \cosh ly \sin (at + lx' + \alpha'),$$
$$\mathbf{y}_r = A \sinh ly \cos (at + lx' + \alpha');$$

$$\therefore \mathbf{x} + \mathbf{x}_r = -2A \cosh ly \cos (at + \alpha') \sin lx' = -2A \cosh ly \cos (at + \alpha - lL) \sin [l(x - L)] \tag{57}$$
$$\mathbf{y} + \mathbf{y}_r = 2A \sinh ly \cos (at + \alpha') \cos lx' = 2A \sinh ly \cos (at + \alpha - lL) \cos [l(x - L)]. \tag{58}$$

29. *Wave motion propagated up a canal closed at one end.*

Now in order that the displacements just written apply to the case in hand, two conditions must be fulfilled besides the equation of continuity (17) and the dynamical equation (22).

First. Where $x = 0$,

$$\mathbf{y} = A \sinh ly \cos (at - lx + \alpha);$$

for otherwise, an abrupt change in height would take place as we pass from open water into the mouth of the canal.

Second. Where $x = L$,

$$\mathbf{x} = 0;$$

for, at the head of the canal no horizontal motion can take place.

If we write

$$\mathbf{x} = \frac{A \cosh ly}{\cos lL} \sin [l(L - x)] \cos (at + \alpha), \tag{59}$$

$$\mathbf{y} = \frac{A \sinh ly}{\cos lL} \cos [l(L - x)] \cos (at + \alpha), \tag{60}$$

all of these conditions are fulfilled.

30. *Application to long or tidal waves.*

The expressions (59) and (60) now become, since $\cosh ly \doteq 1$, $\sinh ly \doteq ly$,

$$\xi = \frac{A}{\cos lL} \sin [l(L - x)] \cos (at + \alpha), \tag{61}$$

$$\mathbf{y} = \frac{Aly}{\cos lL} \cos [l(L - x)] \cos (at + \alpha). \tag{62}$$

From these we see that for all values of x, ξ and $\mathbf{y}$ or η are simple harmonic functions of the time; their amplitudes, however, depend upon the value given to x. Throughout the canal the tide rises and falls simultaneously; in like manner, it ebbs and flows. Moreover, it is slack water throughout the canal at the time of high or low water. If $lL = 90°$, or any other odd multiple of $\frac{1}{4} l\lambda$, the value of η becomes very great, especially as x approaches L, while for the even multiples it becomes zero for all values of t. λ is the length of a free tidal wave in a canal not obstructed by a barrier; when expressed in angular measure, $l\lambda$ is, of course, 2π or 360°.

The average depth of the Bay of Fundy along its axis is 40 or 50 fathoms. Table 50 gives about 800 statute miles for the corresponding λ. $\therefore \frac{1}{4}\lambda$ is about 200 miles. Now it happens that the length of the bay is about 150 miles, so that these particular dimensions may in part account for the large tides near its head.* But the wave progresses at about the rate due to depth according to Lagrange's formula, and so it is reasonable to suppose that the effect of the barrier is scarcely felt because of the gradual shoaling in the upper part of the bay.

The Gulf of Maine, whose length inward is about 200 miles and whose depth about 75 fathoms, is, by Table 50, nearly $\frac{1}{4}\lambda$ in length. Hence the stationary character of the wave and the increase in range.†

Portland Canal, forming a part of the boundary between Alaska and British America, furnishes a good illustration of a nearly stationary wave. Its width and depth are quite uniform and its termination is sudden. Simultaneous observations show that the tide at Somerville Bay is simultaneous with the tide at Halibut Bay, 30 miles farther up the canal. Also that the tide at Ford's Cave, 60 miles above Somerville Bay, is but five minutes later. Now the depth of the canal is about 125 fathoms on an average along its axis, and so the time required for a wave to be transmitted 60 miles would be about half an hour, instead of five minutes. The range of tide is nearly constant, being on an average 13 or 14 feet. For a depth of 125 fathoms λ = about 1 300 miles, Table 50.

31. *Forel's seiche period.*

Let it now be required to find the period in which a body of water, as a lake, whose length is $2L$ and whose depth is h, will swing when disturbed from its position of equilibrium by a sudden vertical force acting near either end, or a longitudinal horizontal force acting upon intermediate points.

Taking the middle point as origin, either half may be treated as a canal closed at one end, and affected at the mouth with a periodic disturbance whose period is determined by its length and depth. We have just seen that L should be $\frac{1}{4}\lambda$, in order to bring about the greatest rise and fall at the closed end. But the wave-length and depth being fixed, the periodic time becomes fixed by the equation

$$\tau = \frac{\lambda}{\sqrt{gh}}. \tag{63}$$

Replacing λ by $4L$, we have

$$\tau = \frac{4L}{\sqrt{gh}} = \frac{\text{twice length of lake.}}{\sqrt{gh}} \tag{64}$$

It is an easy matter to test this formula experimentally. Suppose we have a rectangular tray of water $2L$ inches in length and h inches in depth. Now, suddenly raise one end or otherwise disturb the equilibrium of the fluid. The free wave immediately traverses the length of the tray, returns, sets out again, and so continues to go back and forth until the equilibrium is gradually restored. Next, suppose that as soon as the wave returns to the end of the tray where it was produced a similar disturbance is repeated. The wave will this time set out increased in size. Let the slight disturbance be repeated periodically, according to the period thus determined, until finally the water simply swings, as it were, there being no progressive character of the motion to be seen. Formula (64) gives the period of the oscillation in seconds, provided we express g in inches (= 386). Of course the period will generally be altered when the depth ceases to be uniform.

Ferrel's explanation‡ of the abnormally large semidiurnal tides of the North Atlantic Ocean is based upon the fact that a tray or canal closed at both ends, extending from Europe to America, having the average depth of the ocean along the parallel of about 52° north, would have about

*Cf. Airy, Tides and Waves, Art. 506.

†Cf. Mitchell, U. S. Coast and Geodetic Survey Report, 1879, pp. 175–190.

‡Tidal Researches, pp. 237 et seq.

twelve lunar hours for its complete period of oscillation. Possibly the periods of free oscillation of certain zones of the Pacific have considerable influence upon the size of the diurnal oscillations in that ocean.

It is possible that component tides, whose periods are some fractions like $\frac{1}{2}, \frac{1}{3}, \frac{1}{4}, \ldots$ of a half tidal day, may be due in part to stationary oscillations of the kind just referred to; that is, they may owe their size to the length and depth of the body of water in which they occur, rather than to the water being so shallow that the range of tide is a considerable fraction of the depth.

32. Returning to equations (61), (62), we have

$$\mathbf{y} = \frac{ly}{\tan [l(L-x)]}\xi. \tag{65}$$

That is, the surface particles, or particles originally occupying the same horizontal line, execute simple harmonic oscillations along fixed rectilinear paths, the tangent of whose inclination to the horizontal is

$$\frac{ly}{\tan [l(L-x)]}. \tag{66}$$

Near the head of the canal this becomes

$$\frac{y}{L-x}. \tag{67}$$

Let us now suppose the displacements of particles in the same horizontal row to take place about the same point; that is, let the distance x be eliminated, then

$$\xi^2 + \frac{\mathbf{y}^2}{(ly)^2} = \left[\frac{A \cos (at+\alpha)}{\cos lL}\right]^2. \tag{68}$$

This shows that if the middle points of all the rectilinear paths be placed at one point, the extremities of these paths will define an ellipse. For different values of t, the size of this ellipse will vary, but its shape will be unaltered. At the time of mean sea level the ellipse becomes a point. For different values of y the major axis of the ellipse will remain unaltered, but the minor will be proportional to the depth taken.

Confining ourselves to the horizontal motion, we may liken it to the horizontal motion of the particles in an elastic body fixed at one end, that is where $x = L$, and to the other end of which a force is applied. If $L - x$ is small, the body is one of rectangular xy-section, and the displacement of the particles will be proportional to the distance from the fixed end. When the length $L - x$ is not small, the xy-section is bounded by the lines

$$\begin{aligned} x &= L \\ x &= x \\ y &= 0 \\ y &= \pm k \sec [l(L-x)] \end{aligned} \tag{69}$$

where k is a constant.

33. *How the range of tide may be increased when the cross section of the canal becomes smaller.*

The energy contained in a long wave can be shown to be directly proportional to its length, breadth, and the square of the amplitude of its vertical oscillation. Now, if the cross section varies so slowly that the wave is not disintegrated by reflection, and if other dissipating causes are ignored, the energy will remain constant.

$$\therefore \lambda \times b \times \eta^2 = \text{a constant} \tag{70}$$

But λ is proportional to $\sqrt{gh}$, and so

$$\eta = \frac{\text{a constant}}{b\sqrt{h}}. \tag{71}$$

The effect of gradual shoaling and converging shore lines, is an increase in the amplitude of the tide wave.* Having once been so increased, it is possible for it to be propagated along the shore as a free wave, virtually governing the tide for considerable distances.

* See Lamb, Hydrodynamics, §§ 171, 181, 182.

SOME HYDRAULIC CONSIDERATIONS.

34. *A bay, harbor, or tidal river with but one opening.*

Let us suppose that the tide is known at a sufficient number of places to enable one to ascertain approximately the height of tide at any given place in the harbor. We are now not concerned with what takes place outside, but simply with the ever-changing tidal volume within.

When the volume is a maximum it is clearly "slack-before-ebb" at the opening or mouth of the harbor; when a minimum, "slack-before-flood."

If, in a short canal of uniform width closed at one end, the depth be such that the range and shape of the tide are constant, then it will be slack water at a given cross section when the crest or trough of the tide wave is midway between the given cross-section and the head of the canal;* for, the average depth of the water will then be a maximum or a minimum.

Supposing the cross section (F) at the mouth of a harbor to be constant, we have for the velocity

$$v = \frac{1}{F}\frac{dV}{dt} \tag{72}$$

where dV denotes the change in volume during the short interval of time dt (say ten or twenty minutes).

If the area of the harbor is the same at high as at low water, and if the rise and fall of the average surface be denoted by

$$y = A\cos(at + \arg_0 A - A^\circ) + B\cos(bt + \arg_0 B - B^\circ) + \quad . \quad . \quad . \quad , \tag{73}$$

then the velocity at the mouth of the harbor is evidently proportional to $\frac{dy}{dt}$, and so to

$$Aa\sin(at + \arg_0 A - A^\circ) + Bb\sin(bt + \arg_0 B - B^\circ) + \quad . \quad . \quad . \quad . \tag{74}$$

In other words, the amplitudes of the various current components compare among themselves, not as the amplitudes of the corresponding tidal components of the harbor, but as these latter multiplied by their respective speeds. Hence, the diurnal inequality in the current velocities is less striking than in the heights of the tide. If, for the sake of form, we write cosines in the place of sines, we must apply $\pm 90^\circ$ to the above angles.

Example.—The area of San Francisco Bay and tributaries being about 430 square miles, the width of the Golden Gate at Fort Point 1 mile, and the average (mean sea level) depth at this section 30 fathoms, required, the velocity of the current when the height of the bay is changing at the rate of $1\frac{1}{2}$ feet per hour.

Here the hourly change of volume is

$$430\times 5280\times 5280\times 1\tfrac{1}{2} \text{ cubic feet,}$$

and so the change per second is about 5 000 000 cubic feet. The area of the cross-section is about 950 000 square feet.

$$\therefore v = \frac{500}{95} = 5{\cdot}3 \text{ feet per second} = 3{\cdot}1 \text{ knots.}$$

In a body of water as large as this, ranges of short duration can not conveniently be used with accuracy for estimating the hourly change in height, unless the tide is known at several points in the bay.

35. *On the steady flow of streams.*

The well-known formula due to Brahms and Chézy is

$$v = c\sqrt{RS}, \tag{75}$$

or

$$\text{velocity} = \text{empirical constant} \times \sqrt{\frac{\text{area of cross-section}}{\text{length of wetted-perimeter}} \times \frac{\text{head or fall}}{\text{length}}},$$

$$= \text{a coefficient } \sqrt{\text{hydraulic radius} \times \text{slope}}. \tag{76}$$

* Cf. L. d'Auria, Jour. Franklin Institute, Vol. 131 (1891), p. 267.

Experiments show that c, in a measure, depends upon the roughness of the wetted perimeter, upon the value of R, and of S. The value of c is often round about 90, when the foot unit is used, and about 50 when the meter; but the values vary widely.* The best known of the more elaborate formulæ is the one generally styled Kutter's.† Because of the inertia of the water, it is obvious that no general formula can be consistent for various sections of a large river like the Lower Mississippi.

36. *On the flow through a small opening connecting two large bodies of water.*

Suppose we have two large tanks of water connected by a very short horizontal pipe; also suppose the difference in level $(y_m - y_n)$ of the surfaces of the fluid to remain constant. All particles in this pipe, at whatever depth it may be situated, and whatever may be its dimensions, provided only it is moderately small, should, by Torricelli's theorem, move with a velocity

$$v = \sqrt{2g\,(y_m - y_n)}. \tag{77}$$

If the dimensions of the pipe have to be taken into account, because of friction between it and the water, we have

$$v = \sqrt{\frac{2g\,(y_m - y_n)}{1 + \zeta \frac{L}{R}}} \tag{78}$$

where ζ is a coefficient supposed constant for a given material.

37. *Short tidal river or strait connecting two large bodies of water, one or both of which are tided.*

We shall suppose that the horizontal motions of the two bodies is so small that their influence upon the velocity of the water in the strait may be neglected. Considering only one component of the tide, the respective heights at any given time are

$$y_m = A_m \cos\,(at + \arg_0 A - A_m^\circ), \tag{79}$$

$$y_n = A_n \cos\,(at + \arg_0 A - A_n); \tag{80}$$

$$\therefore y_m - y_n = [A_m \cos A_m^\circ - A_n \cos A_n^\circ] \cos\,(at + \arg_0 A) + [A_m \sin A_m - A_n \sin A_n^\circ] \sin\,(at + \arg_0 A),$$

or

$$= \sqrt{A_m^2 + A_n^2 - 2A_m A_n \cos\,(A_m^\circ \sim A_n^\circ)} \cos\,(at + \arg_0 A + \delta), \tag{81}$$

where

$$\tan\,\delta = -\frac{A_m \sin A_m^\circ - A_n \sin A_n^\circ}{A_m \cos A_m^\circ - A_n \cos A_n^\circ},$$

showing that the difference in level of the two surfaces is a simple harmonic function of the time. Supposing the motion steady for a limited time, the horizontal velocity in the strait should be, at a given point, proportional to

$$\sqrt{y_m - y_n}.$$

Now it can be shown by § 58, Part II, that

$$\pm\sqrt{|\sin\theta|} = 1{\cdot}112 \sin\theta + 0{\cdot}155 \sin 3\theta + 0{\cdot}066 \sin 5\theta + \ldots, \tag{82}$$

$$\pm\sqrt{|\cos\theta|} = 1{\cdot}112 \cos\theta - 0{\cdot}115 \cos 3\theta + 0{\cdot}066 \cos 5\theta - \ldots. \tag{83}$$

consequently the velocity of ebb and flow is not a simple harmonic function, although the tide in either body of water rises and falls according to such law; that is, there are terms whose periods are $\frac{1}{3}$, $\frac{1}{5}$, . . . part of the period of the fundamental. Their effects upon the current curve, is to give it a less pointed appearance than a curve of sines, i. e., to render it more like a semicircle. An illustration of such a condition is to be found in the East River, which connects New York Bay with Long Island Sound. Diagrams of the currents in this river, off Twenty-third street, New York, are given upon pp. 423, 425 of the Report of the United States Coast and Geodetic Survey for 1886.

---

* For numerical values under various conditions, see Hering and Trautwine's translation of Ganguillet and Kutter's work, A General Formula for the Uniform Flow of Water in Rivers and in Other Channels, pp. 39, 160–223, 233–236; also Church, Mechanics of Engineering, pp. 758–761. The symbols R, S, and c are here special or temporary notation.

† Ganguillet and Kutter, loc. cit., pp. 24 et seq., p. 129. Church, loc. cit., p. 759.

Example.—Given, at Governors Island, $M_2 = 2{\cdot}1$ feet, $M_2° = 231°$; at Willets Point, $M_2 = 3{\cdot}6$, $M_2° = 330°$; required, the times of slack water and of maximum velocities in East River.

Reckoning from the time of transit, we have, for the difference in level,

$$y_m - y_n = 2{\cdot}1 \cos (m_2 t - 231°) - 3{\cdot}6 \cos (m_2 t - 330°).$$

This becomes zero when

$$m_2 t = 88° \text{ or } 268°;$$

and a maximum or a minimum

$$m_2 t = 178° \text{ or } 358°.$$

But when $y_m - y_n$ is zero, so is v of (77) or (78); likewise for a maximum or a minimum. When it is high water at Governors Island, $m_2 t = 231°$; and when low water, $m_2 t = 51°$. $88° - 51° = 37° = 1{\cdot}3$ hours as the time which slack (before flood) in East River should follow the time of low water. The strength of flood (easterly current) should occur when $m_2 t = 178°$; this means $231° - 178°$ or $53°$ or $1{\cdot}8$ hours before high water at Governors Island. Similarly, the slack before ebb in East River occurs $1{\cdot}3$ hours after, and the strength of ebb $1{\cdot}8$ hours before, the time of high water at Governors Island. These statements conform well with observed values, the results of which are given in the Coast Survey Tide Tables.

That the velocities of the fluid particles inherent in the wave motions do not account for the currents in East River, appears from the fact that at two hours before high water at Governors Island, the current off Old Ferry Point (a few miles west of Willets Point) is flowing westerly at the rate of $1{\cdot}5$ knots, which is nearly its maximum value at that place. In the Lower Hudson, off Thirty-ninth street, the maximum velocities are about simultaneous with the tides at Governors Island, as the theory of wave propagation in an indefinite canal would require. Two hours before high water the velocity is small ($0{\cdot}7$ knots) and in a northerly direction. Now, had the wave been propagated up East River in a similar manner the velocity would be small at this hour. As a matter of fact it has very nearly its maximum value throughout the narrow portions of the river. Moreover, it can not be due to the wave motion from the east, because off Old Ferry Point the velocity is small and in an opposite direction.

Thus it is seen that the rapid currents of East River, and particularly around Blackwells Island, are not due to the superposition of two horizontal motions of the water as in simple wave motion, but to the difference in head between New York Bay and the western portion of Long Island Sound.*

* Cf. Mitchell, United States Coast and Geodetic Survey Report, 1887, p. 311.

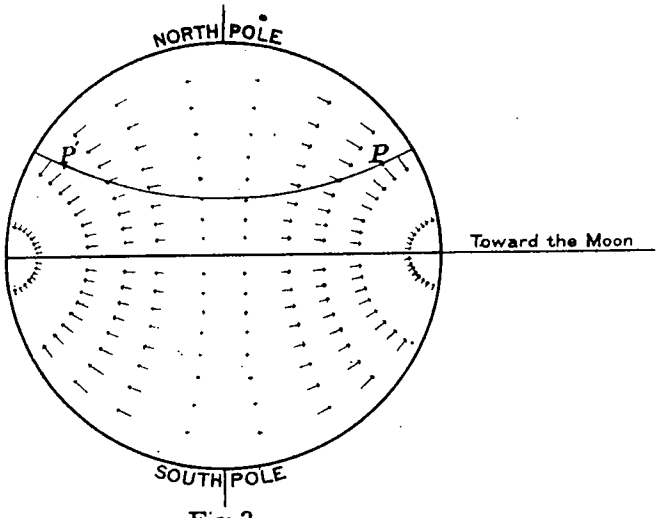

Fig. 3

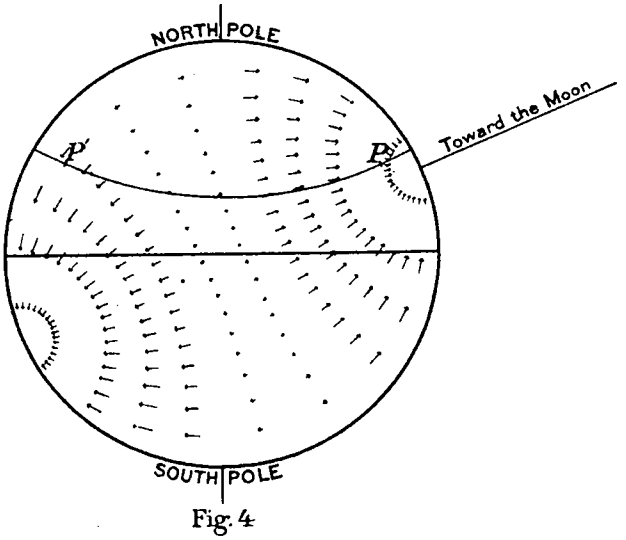

Fig. 4

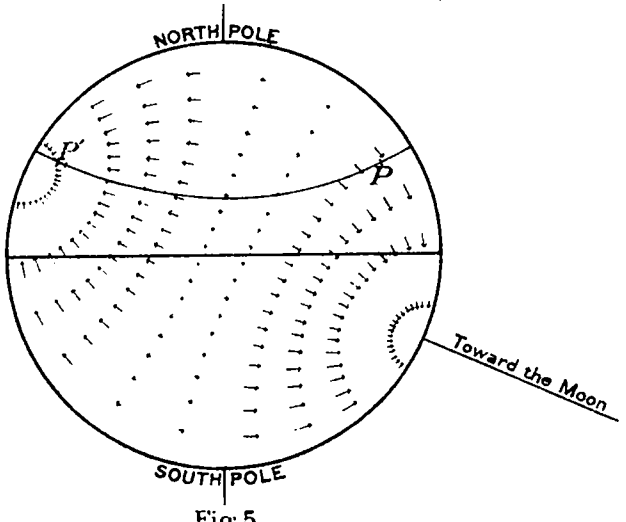

Fig. 5

THE NORRIS PETERS CO., PHOTO-LITHO., WASHINGTON, D. C.

CHAPTER III.

ON THE ORIGIN OF TIDES.

38. In the preceding chapter, the tide wave has been regarded as an existing phenomenon without special reference to its astronomical cause. It is proposed to here briefly consider the origin of the tide under several conditions. This will indicate some of the difficulties with which a general theory has to contend in the case of nature.

All particles of the earth (including the seas) will occupy positions fixed relatively to one another if no other forces act upon them than the following: the earth's attraction, its centrifugal force of axial rotation, and an extraneous force acting upon all of its particles alike. If the extraneous force does not act upon all particles alike, then motions will be set up in the yielding parts.

Suppose the earth to consist chiefly of a spheroidal nucleus either rigid throughout or rigid in its outward layers. Suppose this nucleus to be covered in whole or in part by one or more seas either shallow or not, in comparison with the earth's radius. The attraction of the moon upon any given particle near the surface, say, is along a line drawn (at any given instant) from the particle to the moon's center; its intensity, which is inversely proportional to the square of the distance, and local direction (i. e., direction with respect to the earth's surface) continually change as the earth rotates upon its axis. The attraction of the moon upon a particle at the earth's center is along a line drawn from the earth's center to that of the moon; its intensity is independent of the earth's axial rotation.

The difference between these two forces may be called the *tide-producing force* at the surface point in question.

Just what this force will do to the water as the earth rotates upon its axis, cannot be clearly seen except for very special cases. This force being very small in comparison with the earth's attraction, its vertical component, which slightly alters the intensity but not the direction of terrestrial gravity, cannot set up in seas shallow in comparison with the earth's radius any considerable motion amongst the fluid particles. The horizontal component of the tide-producing force may, however, impart a sensible horizontal motion to the waters of an extended sea, and, because the fluid is incompressible and continuous within a given basin, indirectly create a slight rising and falling of the surface, whether or not the period of the earth's axial rotation were sufficiently long to enable the surface to approach a level surface; i. e. to arrange itself normal to disturbed gravity at each point.

39. *The tide-producing force.*

The system of arrows in Figs. 3, 4, and 5 are intended to represent the horizontal component of the moon's tide-producing force at various places on the earth's surface. The arrows located upon the same small circle (isodynamic line) are supposed to be of equal length, and all arrows are supposed to lie in a system of great circles which meet in a point directly under the moon and, of course, in a point 180° therefrom. At these two points the length of the arrows is zero; for, the horizontal component of the moon's disturbing force must there vanish—the force itself being vertical. The length of the arrows is likewise zero along a great circle midway between these two points; for, all points along this circle are very nearly as far from the moon as is the earth's center.

The system of arrows is fixed with respect to the moon, and so sweeps over the surface of the earth as the moon performs her apparent daily revolution, or shifts somewhat as she declines north or south from the celestial equator. At any point P on the earth's surface, the moon being upon the equator, the horizontal forces are equal in magnitude and direction to the horizontal forces at P', a point upon the same parallel of latitude as P, but 180° distant in longitude; or, what amounts to the same thing, they repeat themselves at any given point P every half lunar day. But when the moon is not upon the equator, the forces are not generally the same at P and P', either in magnitude or in direction, and so do not exactly repeat themselves every half lunar day. This alternation of the forces gives rise to a diurnal inequality in the tides.

It will be noticed that for places situated upon either side of the equator, the forces have, when the moon is upon the equator, a meridional component directed from the poles toward the equator, and that this component never points from the equator toward the poles; consequently the existence of the moon causes the water (half-tide level) at the equator to be higher than it would otherwise have been (cf. § 47).

The moon's movement in declination causes a fortnightly fluctuation in half-tide level.

The magnitude of the tide-producing force can be shown graphically by means of the following obvious construction:*

Let M denote the moon, or its mass; E, the earth's center, or the earth's mass; P, any point whose distance is ρ from E; r, the distance EM, and D, the distance PM.

Locate a point O on PM produced through P such that $OM = r \times \frac{r^2}{D^2}$. Consequently if we let EM represent the attraction of the moon, M, upon unit particle at E, which attraction is $\frac{\mu M}{r^2}$, OM will represent, upon the same scale, the attraction of M upon unit particle at P, which is $\frac{\mu M}{D^2}$. μ denotes the attraction between two unit particles unit distance apart. Join O and E; then OE represents in both magnitude and direction the disturbing force of M upon P. The projection of OE upon PE, produced when necessary, is the vertical component of the disturbing force, and the perpendicular line from O to PE is the horizontal component.

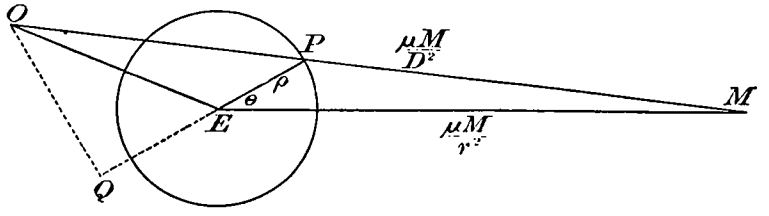

Fig. 6.

1. To find the magnitude of OE when P lies 90° from M. In this case O coincides with P and OE becomes equal to ρ. But if the length EM or r represents the force $\frac{\mu M}{r^2}$, the length OE or ρ must represent a force $\frac{\mu M}{r^2} \times \frac{\rho}{r}$. That is, the tide-producing force at a point 90° from M acts vertically downward, and its magnitude is one $\frac{\rho}{r}$th, or about one-sixtieth part of the direct attraction of the moon upon unit mass of the earth. To express this in feet and seconds units, as g is usually expressed, we note that

$$g = \frac{\mu E}{a^2}, \tag{84}$$

or

$$\mu = \frac{a^2}{E} g, \tag{85}$$

where a is the mean radius of the earth and E its mass.† Since $\rho = a$, the compressing force at P becomes

$$\frac{M}{E}\left(\frac{a}{r}\right)^3 g, \tag{86}$$

or

$$\frac{1}{81{\cdot}07}\left(\frac{1}{60{\cdot}34}\right)^3 g, \tag{87}$$

$$= 0{\cdot}000\ 000\ 056\ 15\, g$$
$$= 0{\cdot}000\ 001\ 806 \text{ feet per second.} \tag{88}$$

* Cf. Newton's Principia, Bk. I, Prop. 66.

† $a = \sqrt{(\text{equatorial radius})^2\ (\text{polar radius})} = 20\ 902\ 000$ feet $= 3958{\cdot}7$ miles.

2. To find the magnitude of OE when P lies on the line EM. Here $D = r \mp \rho$; and so $OM \left(= r \times \frac{r^2}{D^2}\right) = r \pm 2\rho$, and $OE = \pm 2\rho$. But upon the scale adopted OE must represent a force whose magnitude is

$$2 \frac{\mu M}{r^2} \times \frac{\rho}{r}$$

$$= 2 \frac{M}{E} \left(\frac{a}{r}\right)^3 g. \tag{89}$$

It is directed toward the moon when P lies between E and M and from the moon when beyond E. The horizontal component is zero. The entire range of the disturbing force, as the angle between M and ρ varies from 0° to 90°, is

$$3 \frac{M}{E} \left(\frac{a}{r}\right)^3 g = 0{\cdot}000\ 000\ 168\ g. \tag{90}$$

3. The above construction shows that for most positions of P the vertical and horizontal components of the tide-producing force are not very unequal in magnitude; for, OE is inclined at all angles according to the positions of P. The general expressions for these are not so conveniently derived from the above construction as from Proctor's, given in § 31, Part II, or from differentiating the tide-producing potential along the direction of the required force. The vertical and horizontal component forces are

$$\frac{\mu M \rho}{r^3} \left(3 \cos^2 \theta - 1\right), \tag{91}$$

$$3 \frac{\mu M \rho}{r^3} \sin \theta \cos \theta, \text{ or } \frac{3}{2} \frac{\mu M \rho}{r^3} \sin 2\theta. \tag{92}$$

Since the horizontal acceleration $\left(\frac{\partial^2 \xi}{\partial t^2}\right)$ is $\frac{3}{2} \frac{\mu M \rho}{r^3} \sin 2\theta$, or 0·000 002 71 sin 2 θ feet per second, we have upon integration over 90° or three lunar hours.

$$\xi = 0{\cdot}000\ 002\ 71 \times \frac{1}{m_2^2} = 137 \text{ feet}, \tag{93}$$

where m_2 is 0·000 1405 radian per second, instead of 28·984 degrees per hour. This gives 137 feet for the maximum excursion of a particle at the equator east or west from its mean position, due to the moon.

In order to see that the vertical force can have little or nothing to do with the tides, let us suppose that, in a sea of uniform depth, the density of the water be increased or decreased from place to place in such proportions as the force of gravity is altered by the vertical disturbing force of the moon. But the extreme variation in density over the globe would then be only 0·000 000 168. And so, returning to the consideration of water of constant density, it follows that the extreme variation in the height of the free surface of a sea of uniform depth would be but a 0·000 000 168 part of the depth.

The vertical force being generally about the same magnitude as the horizontal, and acting nearly perpendicularly to the free surface of the fluid, cannot create a horizontal motion comparable with that created by the horizontal force.

The deviation of the plumb line is evidently due wholly to the horizontal force. It is supposed to be practically independent of the depth or mass of the water, the topography of the continents, etc. Any surface normal to the disturbed plumb line is a *level surface.*

If a liquid surface coincide with an instantaneous level surface, while the latter undergoes changes, the forces responsible for the behavior of the liquid must be horizontal and not vertical.

40. *A small but not extremely shallow body of water.*

In this case the motion of the fluid hardly need be considered. The only thing necessary to be done is to find at any given instant how the direction of terrestrial gravity—that is, the direction of the plumb line—is perturbed because of the moon's attraction, and to then assume that the instantaneous surface of the water is perpendicular to this direction.

The direction of the plumb line at a given place, but for the presence of a tide-producing body, would remain fixed with respect to the solid earth, although the latter rotate upon its axis. In general, the horizontal component of the moon's tide-producing force will cause the plumb bob to deviate slightly from its undisturbed position. The point of suspension of the plumb line being fixed with respect to the earth's nucleus, cannot be altered with respect thereto, no matter what the tide-producing force may be. But the plumb bob is acted upon by the tide-producing force for the particular place (which is the difference in the moon's attraction for this place and for the earth's center) and is free to move horizontally. This force combined with the force of terrestrial gravity shows the deviation in the direction of the plumb line.

If the surface of a small body of water arrange itself normal to the disturbed plumb line, it must perform two similar oscillations each lunar day when the moon is on the equator. The tides in such a body are necessarily small because this deviation of the plumb line is only 0″·017 (= 0·000 000 084 radian) either way from its mean position.

When the moon is not upon the equator, the tide-producing force at a given time differs somewhat from the force twelve lunar hours before or after. For this reason the two high waters and the two low waters of a day will generally be somewhat unequal.

The Levant, or part of the Mediterranean Sea east of Sicily, can be taken as an illustration. It extends approximately east and west about 1 100 miles, with a depth ranging from one to two thousand fathoms. [The velocity of a free wave in this depth is three or four hundred miles per hour, and so the surface can, as will be explained in §42, keep itself approximately perpendicular to the direction of perturbed gravity.] Because this sea is in not very high latitude, and extends approximately east and west, it should be high water on the coast of Syria about three hours before the moon's transit over the middle of the sea, and low water at Malta and the eastern coast of Sicily at the same time. In other words, it should be high water at the latter places about three hours after transit. These conclusions agree with the results of observation. The range at the ends should be roughly

$$11\,000 \times 5\,280 \times 0{\cdot}000\,000\,084 = 0{\cdot}5 \text{ feet},$$

which is somewhat smaller than observed values.

Suppose that at the center of gravity of a lake's surface we draw a plane normal to the plumb line; it will cut the surface in a line which may be called a "line of strike" and whose direction is that in which the deviating force is zero. The deviating horizontal force acts in a direction (an azimuth) perpendicular to this line. The height of the tide at any instant, or the volume of water in an elementary area, will evidently be proportional to the distance of the given elementary area from this line. Therefore if the volume of water in the lake remain constant, the statical moment of the entire lake surface must be zero, and so the line must pass through the center of gravity as we have assumed. This point is evidently the point of no-tide. Being a point of no-tide, the times of high water are anything whatever; in other words, all cotidal lines radiate from this point. In ascertaining the tidal forces at such a point, only its latitude need be considered, and any diagram for the purpose will apply anywhere upon the same parallel, regardless of longitude.

The horizontal deviating force is

$$\tfrac{3}{2}\,\frac{\mu M \rho}{r^3} \sin 2\,\theta = 0{\cdot}000\,000\,084\; g \sin 2\,\theta. \tag{94}$$

$$\therefore\ 0{\cdot}000\,000\,084 \sin 2\,\theta \tag{95}$$

is the angle of deviation (expressed in radians) or the slope of the surface of the water due to the moon's disturbance.

For a given latitude (λ) and hour-angle ($\psi - l$), we can suppose θ known through the equation

$$\cos\theta = \cos\lambda \cos\delta \cos(\psi - l) + \sin\lambda \sin\delta, \tag{96}$$

δ being the moon's declination; and the local direction of force through the equation

$$\sin z \sin\theta = \cos\delta \sin(\psi - l). \tag{97}$$

In this way for a given value of δ and of λ, a set of force arrows radiating from the assumed no-tide point and equal to sin 2 θ can be constructed for various values of $(\psi - l)$. Their heads will define a certain curve. To ascertain the height of the tide at any point, not too far distant, at a given lunar hour, compute or observe the value of sin 2 θ on the force diagram; also ascertain the distance in feet from the given point to the line of strike (which is perpendicular to the force arrow); multiply these together and this product by 0·000 000 084; the result is the height of the tide in feet reckoned from the lake surface as it would be if no moon existed. The required distance can be conveniently ascertained by letting the given point and the no-tide point define the diameter of a circle. Then produce the force arrow until it meets the circumference. From this intersection to the given point is the distance required.

To determine the time of high or low water, ascertain the point on the force curve where the normal is parallel to the diameter of the circle defined by the given point and the no-tide point. The hour-angle belonging to that force arrow is the angle required. Of course the time used in reckoning is that belonging to the longitude of the no-tide point.

When $\delta=0$, the force curve is an ellipse whose equation is

$$y^2 + (\sin^2 \lambda)\, x^2 = (\sin \lambda \cos \lambda)\, y \qquad (98)$$

where y is reckoned southward.

In practice it is more convenient and accurate to make use of the horizontal disturbing force resolved into two directions (north-and-south, east-and-west). These are each developed, § 49, Part II, into semidiurnal, diurnal, and long period terms with either constant or somewhat variable coefficients.

The results obtained in § 49, Part II, or which may be obtained as above, for the tide at Duluth, Lake Superior, agree well with observed values. The computed equilibrium tides at Chicago and Milwaukee, Lake Michigan, have ranges considerably smaller than the observed values and their intervals are not as satisfactory as the interval obtained for Duluth. In fact it seems that almost all bodies of water have portions of their coast lines where the range of tide is unreasonably large, indicating that a wave movement has been propagated over a sloping bottom.

The tides of the Gulf of Mexico can be explained by aid of certain assumptions which are based upon observations.

Assuming that the semidiurnal wave does not exist (or is very small) south of the Yucatan Channel, then there is no derived semidiurnal tide from that source. A cross-section of Florida Strait is small in comparison with a cross-section of Yucatan Channel. The semidiurnal wave is not large in any portion of Florida Strait; and so from that source the Gulf can hardly have any considerable derived tide, the eastern part excepted.

At Vera Cruz, which is near deep water, the observed interval ($2^h\ 49^m$) and range (0·4 feet) of the semidiurnal wave approximately agree with the theoretical values obtained by considering the Gulf a closed sea. In the northeastern portion of the Gulf which has broad shallows, the range of tide is greatly increased. At Port Eads, near the mouth of the Mississippi River, the range is nearly zero as we might expect it to be, on account of the proximity of the no-tide point.

Now observation shows that the diurnal wave does exist south of the Yucatan Channel. The latter being broad and deep, permits enough water to enter the Gulf to raise its whole surface almost simultaneously. Observation shows that the tropic high-water interval of the diurnal wave for Gulf stations is generally between 19 and 22 hours, while the tropic range of the diurnal wave is generally between 1 and 2 feet.

41. *An hypothetical equatorial canal of uniform depth surrounding the earth.*

The present illustration is given for the purpose of showing that the surface of the sea does not of necessity arrange itself normal to the plumb line as disturbed by the moon; and here also it is necessary to consider the force tending to deviate the same, that is, the horizontal component of the moon's tide producing force. All particles of the canal in the hemisphere toward the moon have imparted to them horizontal accelerations, urging them toward a point of the canal where the moon is on the meridian. All particles in the other hemisphere are at the same time urged toward a point 180° distant in longitude. There is no acceleration (east or west) at these two points, or at points 90° distant where the moon is in the horizon. Consequently, at any given

place, from moonrise to upper local transit, the acceleration is eastward, because the particle is continually approaching the moon; from transit to moonset the acceleration is westward; from moonset to lower transit it is eastward; and from lower transit to moonrise it is westward. Now, if the fluid be heavy and frictionless, the maximum eastward velocity will occur after all the eastward acceleration has been imparted, that is, at lunar noon or midnight; the greatest westward velocity, at moonrise or moonset; and zero velocity at the third, ninth, fifteenth, and twenty-first lunar hours.

All the time from moonrise till transit, more water flows toward the east than enters from the west at a given place, because the particles of moving water are continually acted upon by a force imparting to them an eastward acceleration. The reverse is true from transit to moonset. Similarly for the other half of the lunar day. During one of these periods the tide must be continually falling, and during the other continually rising. Low and high waters occur at the close of these periods, that is, at the transits and when the moon is in the horizon. The tides having a fixed position with respect to the moon, it follows that the wave-form travels westward around the earth twice during each lunar day. Of course even the horizontal displacements of the fluid particles are small in comparison with the earth's radius. But it is obvious that if the wave-form advance westward, the orbital direction of the fluid particles must be such that the particles at high water are moving westward and at low water eastward; and so, as just stated, high water must occur when the moon is in the horizon, and low water when on the meridian.

Let x denote the distance of the place east from the meridian of Greenwich, or $\frac{x}{a}$ be its east longitude (in radians); let α or $\arg_0 \mathrm{M}_2$ denote twice the hour angle of the moon at the time $t=0$.

$$\therefore 2\theta = \mathrm{m}_2 t + \frac{2x}{a} + \alpha \tag{99}$$

is twice the angle reckoned westward between the point and the moon.

The eastward and upward displacements of the forced waves are

$$\xi = -\tfrac{1}{4}\frac{f a^2}{c^2 - \mathrm{m}_1{}^2 a^2}\sin 2\theta, \tag{100}$$

$$\eta = \tfrac{1}{2}\frac{c^2 H}{c^2 - \mathrm{m}_1{}^2 a^2}\cos 2\theta, \tag{101}$$

wherein are put temporarily

$$f = \tfrac{3}{2}\frac{\mu M a}{r^3},$$

$$c^2 = g h,$$

$$H = \frac{a f}{g}.$$

These satisfy the equation of continuity (17) and the dynamical equation [cf. (23), (25), (92)]

$$\frac{\partial^2 \xi}{\partial t^2} = c^2 \frac{\partial^2 \xi}{\partial x^2} - f \sin 2\theta. \tag{102}$$

The eastward accelerating force due to the rate of change in pressure due to height of the free surface is $c^2 \frac{\partial^2 \xi}{\partial x^2}$. But the moon exerts a retarding (westward) force equal to $f \sin 2\theta$. Hence the above equation. Frictional resistance can be taken into account by subtracting from the right-hand member of this equation a term proportional to some power of the velocity $\left(\frac{\partial \xi}{\partial t}\right)$. The forms of ξ and η must then be altered to correspond.*

*Airy, Tides and Waves, Arts. 322 et seq.; Abbott, Elementary Theory of the Tides (1888), pp. 33 et seq.; Lamb, Hydrodynamics, §§ 178, 276 et seq.

When the water is shallow

$$\xi = \tfrac{1}{4}\frac{f}{m_1^2}\sin 2\theta = 137 \sin 2\theta \text{ feet}, \tag{103}$$

$$\eta = -\tfrac{1}{2}\frac{c^2 H}{m_1^2 a^2}\cos 2\theta = -\tfrac{1}{2}\frac{hf}{m_1^2 a}\cos 2\theta = -0{\cdot}000\ 013\ h \cos 2\theta \text{ feet}. \tag{104}$$

The amplitude of the tide in a shallow equatorial canal is therefore but a small fraction of a foot and is proportionate to the depth. The tide is evidently *inverted* since low water occurs when $2\theta = 0°$.

When the depth is such that the free wave travels as fast as the moon or the forced tidal wave, then

$$c^2 - m_1^2 a^2 = 0; \tag{105}$$

and so the displacements tend to become infinite. Such a value of h is 67 000 feet. For greater depths the tide would be *direct*, i. e. high water would occur when $2\theta = 0°$.*

When the depth is very great the displacements approach the values

$$\xi = -\tfrac{1}{4}\frac{a^2 f}{c^2}\sin 2\theta, \tag{106}$$

$$\eta = \tfrac{1}{2} H \cos 2\theta. \tag{107}$$

It will be seen from § 47 that this value of η is equivalent to the tide of the equilibrium theory, H denoting the range of the lunar portion, which is about 1·8 feet.

It is important to note that in a shallow canal (and no others exist on the earth) the displacements depend upon the period of the disturbing force, or the "speed" of the disturbing body. The greater the speed, the smaller the amplitude. Hence, the ratio of the amplitude of the solar to that of the lunar tide ought to be less than the ratio as derived from the equilibrium theory. In nature this is generally found to be the case.

It should also be noted that when friction is taken into account, not only does the amplitude or coefficient of the displacement depend upon the "speed" of the tidal body, but the angle or phase of the displacement does likewise depend upon it.†

42. *The tides of the ocean do not produce a level surface.*

In order to be convinced that the instantaneous surface of a large body of water cannot be a *level surface*, let us inquire what takes place when a vessel or trough of water is slightly disturbed—say slightly elevated at one end. If the disturbance be sudden, evidently a wave will be seen passing back and forth across the surface; finally it will disappear and equilibrium will be restored. If the disturbance be gradual no wave may be noticeable, but equilibrium will be restored at each instant. Now suppose the trough to be so long that the gradual elevation and depression of one end of it takes place in a period of time less than the time required by the free wave to traverse its length. As long as the disturbance continues equilibrium cannot be restored. Hence it follows that the length of the trough and the depth of the water must be such that the free wave travels the length of the trough several times during the period of the disturbance if the surface is to remain nearly level. From this we conclude that the surface of an ocean cannot be a level surface, because too much time is required for the free wave to cross and recross—in other words, for the surface to arrange itself normal to the plumb line.

For example, the period of the (semidaily) tidal forces is about equal to the time required for a free wave to be transmitted from Japan to California.

43. Tidal observations have been confined to such portions of the sea as have comparatively small depths. For this reason it has seemed impossible to ascertain what actually takes place in

* This usage of the word "direct" is due to Dr. Thomas Young. Perhaps it might be well to substitute therefor the word "erect," and to use the word "direct" in antithesis to "derived."

† Airy, loc. cit.

deep waters, causing the tides observed along the shores of continents and islands. If it shall become possible to detect, even roughly, the rising and falling of the tide at sea by means of the barometer,* this much-needed information will be supplied, and charts of cotidal lines may then be constructed with some degree of certainty.

In case of a deep but small inclosed sea, the surface of the water undoubtedly keeps itself perpendicular to the direction of the earth's gravitational force as perturbed by the tidal body. In other words, the maximum excursions of fluid particles take place when the deviating force is a maximum. As already noted, this implies that for an equatorial lake or sea the surface is most inclined to its undisturbed level at the third hour before or after its semidaily transit across the no-tide meridian. At the third hour before the transit the eastern portion should have high water and the western low water, and *vice versa* for the third hour after its transit.

It is reasonable to suppose that the particles which constitute a very large body of water, like an ocean, may have a tendency, because of their inertia, to reach their greatest displacements in a given direction not when the force acting in that direction becomes a maximum, but rather when the force in the opposite direction becomes a maximum or nearly so, as in the case of the equatorial canal already considered; for instance, extreme eastward elongation at a given place may for this reason occur about three hours after the time of the moon's transit across the local meridian. But, as shown in § 41, the range of tide in a self-returning equatorial canal is small in comparison with the range of tide in even a moderately large sea where the (corrected) equilibrium theory must still approximately apply. From this we are led to believe that in producing the tide the effect of the horizontal motion alone in a boundless shallow ocean is probably small. It is the boundary conditions (shores and bottom) which come in to enable the astronomical forces to produce tides of considerable magnitude. In fact these conditions make an approximate equilibrium tide possible in a sea not too extended. Other effects of boundaries have been noted in §§ 30, 33.

A large body of water approximately surrounded by lands and shoals is set into some kind of oscillation by the tide-producing forces. The manner in which it will be divided into vibrating masses by nodal lines depends upon the extent, shape, and depths of the body of water.

Probably off the eastern and western boundaries would be found the greatest direct† effect of this action, although right at the shores themselves the range of tide must generally be still greater, owing to the propagation of the free wave over shallow areas. Whether the eastern or western edge have the greater rise and fall of tide will depend upon the bounding lands and shoals, also upon the extent of the water.

If the tide at one point be considerably greater than that at others, the wave there generated may be propagated far as a free wave and partly control the positions of the cotidal lines.‡

In large oceans there may be traces of waves, which move westward at the rate of 360° in a lunar day. But whatever waves go to build up the tide, the combined effect probably makes cotidal lines generally real.

In regard to latitude it may be said that direct equatorial tides should have large semidiurnal and small diurnal constituents. The semidiurnals should decrease as the latitude increases, and the diurnals increase up to latitude 45°, after which they decrease.

44. If a bay communicates with the ocean, its tide is almost wholly derived from without. That is, a free wave is propagated up the bay, its velocity depending chiefly upon the depth of the water (§ 23). Numerous reflections from the sides and the head of the bay may be sufficient to alter the phase of the tide (at any given instant) somewhat, and so the velocity of the resultant crest. The same cause may likewise alter the amplitude. It is obvious that the corresponding reflections of the diurnal wave will not, in general, have the same accelerating or retarding effect upon its crest as had those pertaining to the semidiurnal. In such regions the type of tide may vary rapidly from point to point; that is, the diurnal and semidiurnal waves do not travel with the same velocity as is the case in a canal of uniform depth, the friction being for simplicity assumed to be zero. Speaking more generally, the particular form and size of a bay, in conjunction

* See R. Abercromby, Phil. Mag., Vol. 25 (1888), pp. 263-269.

† I. e., as opposed to "derived" or "propagated." This usage of the word "direct" has nothing in common with Dr. Young's usage of the same word mentioned in § 41.

‡ E. g., Gulf of Panama.

with the fixed periods of the tides, govern or define its tidal movements or vibrations. For example, the Tidal Survey of Canada has shown that the semidiurnal tides at St. Peters, Prince Edward Island, are about two hours earlier, and those at Miramichi Bay more than three hours earlier, than the tides at St. Paul Island at the entrance to the gulf.

The statements made concerning the propagation of a wave up a bay, must not be taken too literally. The fact is that even if we have so simple a case as a sea or bay (whose own or direct tide is negligible) communicating with the ocean by one or more comparatively small and definite openings, and if at such mouths or openings the tides and currents are known from observation so that they could be predicted at any future time, we are, in the present state of our knowledge of wave motion, quite unable to predicate the motion in various parts of the sea or bay, although all depths and boundaries are known. It is probable that cases of this kind will sooner or later be attacked by mathematicians, and with some measure of success.

Such considerations as the above, but more especially the fact of interference due to the water approaching from more than one direction, explain in part the great variety in the types of tide found in island regions.

The reason why diurnal tides should succeed better than semidiurnals in passing barrier reefs, and therefore becoming conspicuous in island regions, is obvious. In fact, the shorter the period of the wave, the more a reef or other great obstruction will affect it; and this because the amount of water which passes it in the flow and the ebb (the ranges being equal) increases when the length of the period is increased. A tide of long period and an almost complete barrier, so far as tides of short periods are concerned, serve to illustrate what is here intended.

45. Perhaps the only ocean region where the tide approaches its normal* form is the North Pacific Ocean. For, so far as the semidiurnal wave is concerned, both North and South Pacific form one region, and so there is no interfering from a neighboring region. The diurnal wave naturally becomes small as the equator is approached, and so the derived diurnal wave from the South Pacific can hardly be felt far north of the equator, where the direct diurnal wave is large. The western coast of America, the eastern coast of Japan, and perhaps the Sandwich Islands, seem to be most favorable localities for normal tides. Next to these regions is, perhaps, the eastern portion of South Pacific—say along the western coast of South America and around the southeastern islands of Polynesia. The East Indies naturally constitute the most complicated tidal region, and the West Indies probably come next.

So far the type of tide has been governed by the size and position of the diurnal wave with respect to the semidiurnal wave, and these are quantities most subject to variation in short distances.† But when long distances are considered, the fact that each wave is composed of a solar as well as a lunar portion becomes important. The oscillations being of slightly different periods, it is easy to suppose (because the wave is generally neither direct nor derived, but in part both) that one oscillation may gain in phase somewhat upon the other, and that the ratio of the two amplitudes may vary. In a region where there may be reflections or interferences of the tidal wave, the relative amplitudes and epochs of two oscillations of different periods must generally differ from point to point. The two portions of semidiurnal wave may thus follow their apparent causes (sun and moon) by different intervals in certain localities (thus causing the "age" to vary from point to point), and the ratio of their amplitude may likewise vary. So for the diurnal wave.

This is substantially Laplace's‡ explanation of how the speeds of components may alter their relative amplitudes and epochs. Airy§ found that with fewer assumptions fluid friction would accomplish a like result. It is probable that amplitude ratios and the ages of the corresponding inequalities depend upon both of these causes.

Vague considerations like these lead to inferences like the following:

Large diurnal or semidiurnal waves are approximately normal, and small ones abnormal.

---

*I. e., a tide in which the $\frac{\text{diurnal}}{\text{semidiurnal}}$ components have such relations to one another as are implied in the equilibrium theory.

†E. g., the coast of Ireland, Phil. Trans., 1845, p. 45.

‡Méc. Cél. Bk. IV, sec. 18.

§Tides and Waves, Art. 329; Lamb, Hydrodynamics, Ch. XI.

By large and small are here meant large and small in comparison with their equilibrium values, or even in comparison with their values in the surrounding regions.

Small ages indicate normal tides; large ages, abnormal.

Diurnals are generally abnormal in localities having abnormal semidiurnals; but observation shows that abnormal diurnals are not always accompanied by abnormal semidiurnals.

The following are references to articles giving general explanations in regard to the causes of tides: Airy, Tides and Waves, Section VIII; Ferrel, Tidal Researches, Chapter VIII and sections 145–149; Lentz, Fluth und Ebbe (1879), Chapters I, II; Günther, Geophysik, Volume II, Chapter IV, sections 5–9; Darwin, Encyclopædia Britannica, Article "Tides," section 3.

CHAPTER IV.

GENERAL PROPERTIES OF TIDES AND MODES OF REDUCTION.

46. *General properties of tides.*

Confining one's attention to a particular station, the following properties common to most tides are usually revealed by means of a few days' observations:

(1) Two high waters and two low waters occur during each twenty-four or twenty-five hours.

(2) The alternate high or low waters are more or less unequal.

(3) The heights of corresponding tides vary from day to day.

(4) The lunitidal intervals (high or low water) are different for alternate tides.

(5) The lunitidal intervals for corresponding tides vary from day to day.

(6) The inequality in height or interval referred to in (2) or (4) becomes greater as the moon's declination, either north or south, increases. This does not apply, because of the sun's tidal effect, to the lesser inequality at stations where the high and low waters are affected by quite unequal amounts.

(7) The range of tide (as determined from all four tides of the day) is $\begin{matrix}\text{greater}\\\text{less}\end{matrix}$ than usual near the time of $\begin{matrix}\text{new or full moon.}\\\text{the moon's quadrature.}\end{matrix}$

(8) The range of tide is $\begin{matrix}\text{greater}\\\text{less}\end{matrix}$ than usual near the time when the moon is in $\begin{matrix}\text{perigee.}\\\text{apogee.}\end{matrix}$

(9) The lunitidal intervals are $\begin{matrix}\text{shorter}\\\text{longer}\end{matrix}$ than usual near the times of the $\begin{matrix}\text{first and fifth}\\\text{third and seventh}\end{matrix}$ octants.

The above statements do not usually apply to the tides at stations where but one high and one low water occur daily. The readily observable properties of such tides are:

[1] But one high and one low water occur daily when the moon is far from the equator.

[2] Two high and two low waters, both comparatively small, may occur daily when the moon is near the equator.

[3] The moon being far from the equator, the (diurnal) range of tide is $\begin{matrix}\text{increased}\\\text{decreased}\end{matrix}$ near the time of either $\begin{matrix}\text{solstice.}\\\text{equinox.}\end{matrix}$

47. *The equilibrium theory of tides.**

The uncorrected equilibrium theory begins by assuming—

(1) That the nucleus of the earth is comparatively rigid (or that at least its outer layer is a rigid shell), and that it is composed of concentric spherical layers, each layer having a constant density.

(2) That the nucleus is covered by a fluid of uniform depth, shallow as compared to the radius of the nucleus, but deep as compared to the rise and fall of tide.

(3) That this fluid has neither inertia nor viscosity, nor is there friction between the fluid layer and the nucleus or the enveloping atmosphere.

As these conditions are far from being realized in the case of nature, observations will show at best only certain approximations toward ideal values. Before introducing the modifications

* I. e. *theory* in the sense of a working hypothesis, not as a basis of explanation.

necessary to adapt the theory to the tides, it seems desirable to ascertain what the tendencies are in the ideal case.

Since the angular velocity of the moon in her orbit and the rotary motion of the earth's surface are finite, while the particles of fluid are supposed to respond *immediately* to the forces acting upon them, we may consider the earth's surface as stationary during any given instant, and treat the surface assumed by the water as a case of static equilibrium.

Because of hypothesis (1), the attraction of the moon upon the nucleus is the same as it would have been had the entire mass been concentrated at the earth's center.

At any given place the tide-producing tendencies depend chiefly upon the distance and direction of the disturbing body, and are governed by what may be referred to as Laws I and II.

Law I.—The tendency to produce tides at a given station varies directly as the mass of the disturbing body and inversely as the cube of the body's distance from the earth's center.

In consequence of this law the amplitude of the solar tide ought to be about 0·458 times that of the lunar tide. For, the mass of the sun = 331 000, and the mass of the moon = 1/81, the mass of the earth being unity, while the sun's distance = 92 800 000 miles and the moon's distance = 239 000 miles, so that

$$\text{solar tide} : \text{lunar tide} = \frac{331\,000 \times 81}{(92\,800\,000)^3} : \frac{1}{(239\,000)^3}; \tag{108}$$

$$\therefore \text{ solar tide} = 0{\cdot}458 \text{ lunar tide.} \tag{109}$$

The eccentricity of the lunar orbit being 0·055, this law gives

$$\text{perigean range} : \text{mean range} = \frac{1}{(1 - \text{eccentricity})^3} : 1, \tag{110}$$

$$\text{apogean range} : \text{mean range} = \frac{1}{(1 + \text{eccentricity})^3} : 1. \tag{111}$$

$$\therefore \text{ perigean range} = 1{\cdot}17 \text{ mean range,} \tag{112}$$

$$\text{apogean range} = 0{\cdot}84 \text{ mean range.} \tag{113}$$

Law II.—The tendencies to produce tide for various relative positions of the tide-producing body are proportional to

$$3\cos^2\theta - 1, \tag{114}$$

where θ is the zenith distance of the body corrected for parallax. In other words, θ is the angle at the earth's center defined by the given station and the center of the disturbing body.

If u denote the height of tide expressed in terms of the earth's radius, a, then it is proportional to $3\cos^2\theta - 1$, or equal to say $\alpha'(3\cos^2\theta - 1)$. The equation of the surface of the sea at any given instant is

$$\rho = a(1 + u), \tag{115}$$

or

$$\rho = a + a\,\alpha'(3\cos^2\theta - 1), \tag{116}$$

which is the equation of an ellipsoid whose semiaxes are

$$a(1 + 2\alpha'),\ a(1 - \alpha'),\ a(1 - \alpha'). \tag{117}$$

That is, forces acting according to this law cause the surface of the sea to assume the form of an ellipsoid of revolution whose longest axis points toward the tide-producing body.

It will be observed that when the moon, say, is in the zenith (or nadir) the elevation of the sea is $2\,a\,\alpha'$ higher because of the existence of the moon; but when in the horizon, the elevation of the sea is $a\,\alpha'$ lower.

For a given place the height of the tide will vary from hour to hour of the day chiefly on account of the variations in θ; but, as already noted, it varies somewhat on account of the variation in r, the moon's distance.

For a given place the angle θ depends upon the moon's hour angle and its declination, both of which are functions of time. From spherical trigonometry,

$$\cos\theta = \cos\lambda\cos\delta\cos(l - \psi) + \sin\lambda\sin\delta \tag{118}$$

where

λ = geographic latitude of the station,
l = longitude of the station (W. from Greenwich),
δ = moon's declination,
$\psi = mt$ = moon's hour angle (W. from the meridian of Greenwich).

$$\therefore a\,\alpha'\,(3\cos^2\theta - 1) = \tfrac{3}{2}\,a\,\alpha'\cos^2\lambda\cos^2\delta\cos 2\,(\psi - l) + 3\,a\,\alpha'\sin\lambda\cos\lambda\sin 2\,\delta\cos(\psi - l) + \tfrac{1}{2}\,a\,\alpha'\,(3\sin^2\lambda - 1)(3\sin^2\delta - 1) = \text{height of tide according to the uncorrected equilibrium theory.} \quad (119)$$

For the lunar tide,

$$a\,\alpha' = \tfrac{1}{2}\,\frac{\text{mass of moon}}{\text{mass of earth}} \times \frac{a^4}{(\text{moon's distance})^3} = 0{\cdot}59 \text{ feet;} \quad (120)$$

and for the solar tide,

$$a\,\alpha' = \tfrac{1}{2}\,\frac{\text{mass of sun}}{\text{mass of earth}} \times \frac{a^4}{(\text{sun's distance})^3} = 0{\cdot}27 \text{ feet.} \quad (121)$$

(i) The height of the semidiurnal portion of the lunar or solar tide at a given station is proportional to the cosine of twice the local hour-angle of the moon or sun multiplied by the square of the cosine of its declination. The factor depending upon the declination is always near unity.

(ii) The height of the diurnal portion of the lunar or solar tide at a given station is proportional to the cosine of the local hour-angle of the moon or sun multiplied by the sine of twice its declination. The factor depending upon the declination varies almost directly with the declination.

(iii) There is a portion of the lunar or solar tide which depends, at a given station, wholly upon the declination of the moon or sun. The height of this portion is proportional to $3\sin^2\delta - 1$ where δ represents the declination of the moon or sun. The period of this expression is a half tropical month or year as the case may be.

The height of the entire tide, or of the surface of the sea, at any given time and place is the sum of the six terms just referred to—three belonging to the moon and three to the sun.

*The corrected equilibrium theory.**—To approximately adapt the foregoing theory to the case of nature, we may write the height of the lunar or solar tide in the form

$$R_2\cos^2\delta\cos[2\,(\psi - l) - \varepsilon_2] + R_1\sin 2\,\delta\cos[\psi - l - \varepsilon_1] + R_0\,[3\sin^2\delta - 1] \quad (122)$$

where R and ε must be determined from observations at the given stations. Statements (i), (ii), and (iii) require no modification except that for "hour-angle" we must write "hour angle diminished by a constant appropriate for the station in question" and so for "twice the hour angle".

This correction is theoretically necessary (even if the water have neither inertia nor friction) because the earth's surface is not wholly covered with water, and the equation of continuity can not generally be satisfied when the rise and fall is as given by equation (119) unless we continually alter the plane of reference.

The R's, as did the α''s, involve the factor

$$\left(\frac{\text{mean distance of moon}}{\text{actual distance of moon}}\right)^3, = \left(\frac{c}{r}\right)^3, \text{ or } \left(\frac{\text{actual parallax}}{\text{mean parallax}}\right)^3. \quad (123)$$

In practice the inertia and friction of the water produce important modifications in the R's and ε's from their equilibrium values. Nevertheless, the *form* (122) is capable of approximately representing the rise and fall of the tide in nature. This is especially true, if we make the further

* See preceding footnote.

modification of taking δ and r at times anterior to the time of tide. Such times, as well as the R's and ϵ's, must be determined from observations made at the given station.*

48. *Explanation of phenomena noted in* § 46 *by the equilibrium theory.*

The tides in (i), § 47, are semidiurnal, while those in (ii) are diurnal. Each may, for any particular day, be represented by a cosine curve of proper length (period) and amplitude. Now, it is obvious that the superposition of a diurnal curve upon a semidiurnal, will, in general, cause the alternate maxima or minima of the semidiurnal curve to become more or less unequal in height and unequally displaced in time. These statements account for (1), (2), and (4) of § 46. As noted in (ii), § 47, the amplitude of the diurnal curve (lunar or solar) is nearly proportional to the declination of the moon or sun. This explains property (6), § 46.

The superposition of a semidiurnal curve or wave upon another of nearly equal period, but of greater amplitude, simply increases or decreases the amplitude of the latter when approximately like or opposite phases coincide; but when the phases differ by approximately 90° or 270°, the principal wave is displaced in time by the subordinate one—accelerated or retarded according as

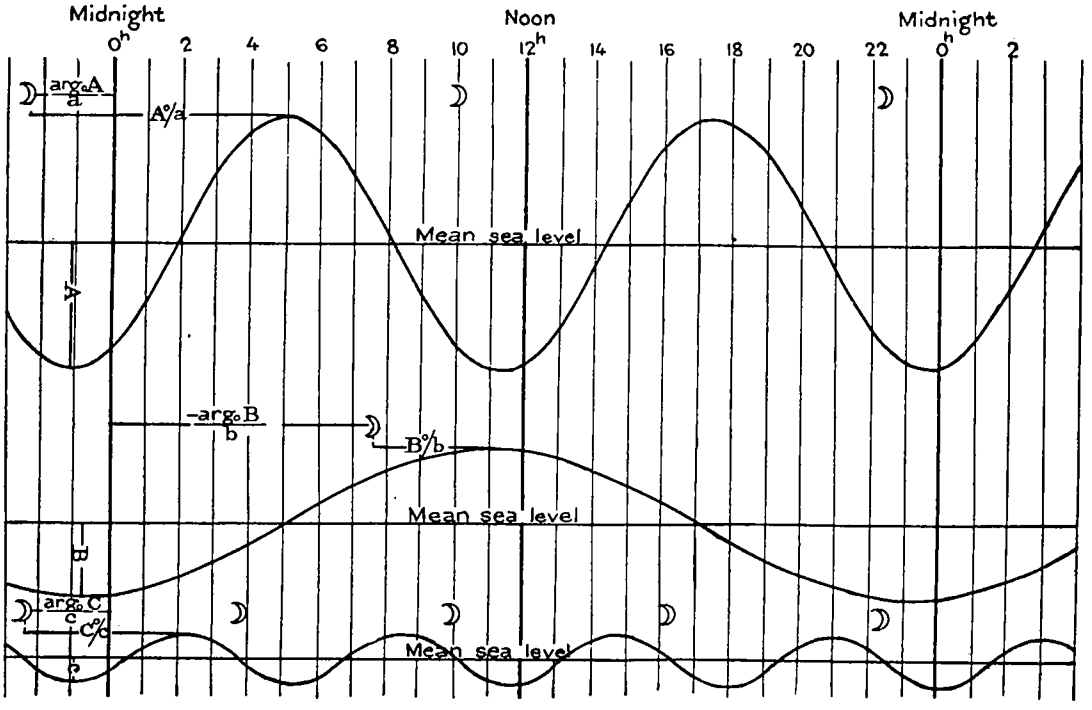

Fig. 7.

the maximum, say, is 90° in advance or in retard of the maxima of the principal wave. This accounts for properties (3), (5), (7), and (9), § 46. Property (8) has been explained in § 47 where the values of the perigean, apogean, and mean ranges are compared. This amounts to varying the α' or the R's inversely as the cube of the moon's distance from the earth's center.

At a station where observation shows that R_1 is several or many times as great as R_2, expression (122), the number of maxima and minima of a curve composed of diurnal and semidiurnal parts will usually depend upon the number of maxima and minima of the diurnal part when the moon's declination is great; but when the moon is near the equator the number may be governed by the semidiurnal part. This accounts for properties [1] and [2], § 46. The moon crosses the equator and reaches its extreme declination at nearly the same points in the heavens as does the sun. This accounts for property [3].

A still more perfect form or expression for the equilibrium theory is obtained by developing the tide-producing potential (the principal part of which is inversely proportional to the cube of

* Cf. Thomson and Tait, Natural Philosophy, §§ 804–811.

the disturbing body's distance from the earth's center, and directly proportional to $3\cos^2\theta - 1$, § 47), into a series of cosine terms. For considerable periods of time the coefficients of these terms remain sensibly constant and their angles or arguments increase uniformly with the time. Having found from the development of the potential what are the more important terms, one then assumes that by leaving all amplitudes and epochs arbitrary the series is, by the principle of forced oscillations,* capable of representing the tide at any given station. The harmonic analysis, § 49, has for its object the determination of these amplitudes and epochs from tidal records.

49. *Harmonic analysis.*†

Since the tide is periodic in its character, and since the periods of its causes are known from astronomical considerations, it ought to be possible to represent the height at any given time by means of the Fourier series, or rather an aggregation of such series

$$y = A\cos(at + \alpha) + B\cos(bt + \beta) + \quad . \quad . \quad . \tag{124}$$

where y is reckoned from main sea level.

For aiding the imagination, we may suppose that any given term in this series represents the oscillation caused by a fictitious star, or moon, moving uniformly in the celestial equator around the earth, and at a constant distance therefrom, having the property of producing a maximum of the oscillation, or component tide, a certain number of hours after its meridian passage.

If a denote the hourly speed of the component A, or the apparent angular velocity of its fictitious moon, and A° its epoch or lag expressed in degrees, A°/a is the lag expressed in hours. Also if $\arg_0 A$ denote the hour-angle of the fictitious moon at local mean midnight, $at + \arg_0 A$ is its hour-angle at any subsequent hour t. Consequently the time of high water of the component A is

$$t = \frac{A^\circ}{a} - \frac{\arg_0 A}{a}, \tag{125}$$

and the height at any time t is

$$A\cos(at + \arg_0 A - A^\circ), \tag{126}$$

so that

$$\alpha = \arg_0 A - A^\circ. \tag{127}$$

By replacing A, A°, a, and α by B, B°, b, and β, the corresponding quantities for any other component, B, are obtained.

The heights due to any components may be shown graphically thus (see Fig. 7):

Lay off the hours of the day according to any convenient scale. Draw cosine curves of amplitudes A, B, . . . and of periods $\frac{360}{a}$, $\frac{360}{b}$, . . . hours in length. The first maxima are located upon the hour lines.

$$\frac{A^\circ}{a} - \frac{\arg_0 A}{a}, \qquad \frac{B^\circ}{b} - \frac{\arg_0 B}{b} \quad . \quad . \quad . \quad ; \tag{128}$$

the succeeding maxima are then fixed by the lengths of the several periods. The symbol ☽ may be used to indicate the time of transit of any fictitious moon.

To combine these curves, add the ordinates for each hour, thus obtaining the resultant tidal curve from which the times and heights of high water and low water may be obtained.

The object of the harmonic analysis is to resolve the observed tide, i. e., observed heights of the surface of the sea, into simple elements or component tides, consisting of simple harmonic oscillations. The quantities a, b, . . . and $\arg_0 A$, $\arg_0 B$, . . . are known from astronomical considerations, so that the analysis of the tide at a given place implies only the determination of the amplitudes A, B, . . . and the epochs A°, B°, ...

To harmonically analyze a given tide, let its height be given at each hour of the day, for a year, say. Sum these ordinates, as nearly as may be, at the component hours of each component (its harmonics excepted). The sums belonging to each component will be 24 in number and

* See Laplace, Méc. Cél., Bk. IV, § 16; or see under Laplace. Also, Part II, § 14. † See Part II.

represent sums corresponding to each of the twenty-four hours into which the component day is supposed to be divided. As the summation in each case is made with reference to the component hours, the effect of the other components upon these 24 sums will, in the long run, approach zero. Having found the 24 heights corresponding to these sums, they may be plotted as hourly ordinates; such a plotting would represent the required component tide combined with its harmonics. To analyze these 24 heights, h_0, h_1, h_2, . . . h_{23}, assume each to be of the form

$$h = H_0 + \bar{A}_1 \cos at + \bar{\bar{A}}_1 \sin at + \bar{A}_2 \cos 2\,at + \bar{\bar{A}}_2 \sin 2\,at + \ \ldots \ + \bar{A}_8 \cos 8\,at + \bar{\bar{A}}_8 \sin 8\,at, \qquad (129)$$

where $at = 0^\circ, 15^\circ, 30^\circ, \ \ldots \ 345^\circ$.

It is not difficult to show that the most probable values of H_0, $\bar{A}$, $\bar{\bar{A}}$ are given by the equations

$$\begin{aligned}
24\,H_0 &= h_0 + h_1 + h_2 + \ \ldots \ + h_{23}.\\
12\,\bar{A}_1 &= h_0 \cos 0^\circ + h_1 \cos 15^\circ + h_2 \cos 30^\circ + \ \ldots \ + h_{23} \cos 345^\circ,\\
12\,\bar{A}_2 &= h_0 \cos 0^\circ + h_1 \cos 30^\circ + h_2 \cos 60^\circ + \ \ldots \ + h_{23} \cos 330^\circ,\\
12\,\bar{A}_3 &= h_0 \cos 0^\circ + h_1 \cos 45^\circ + h_2 \cos 90^\circ + \ \ldots \ + h_{23} \cos 315^\circ,\\
&\ldots\ldots\ldots\ldots\ldots\ldots\ldots\ldots\ldots\ldots;\\
12\,\bar{\bar{A}}_1 &= h_0 \sin 0^\circ + h_1 \sin 15^\circ + h_2 \sin 30^\circ + \ \ldots \ + h_{23} \sin 345^\circ,\\
12\,\bar{\bar{A}}_2 &= h_0 \sin 0^\circ + h_1 \sin 30^\circ + h_2 \sin 60^\circ + \ \ldots \ + h_{23} \sin 330^\circ,\\
12\,\bar{\bar{A}}_3 &= h_0 \sin 0^\circ + h_1 \sin 45^\circ + h_2 \sin 90^\circ + \ \ldots \ + h_{23} \sin 315^\circ,\\
&\ldots\ldots\ldots\ldots\ldots\ldots\ldots\ldots\ldots\ldots
\end{aligned} \qquad (130)$$

From these values of $\bar{A}$, $\bar{\bar{A}}$, we find A and α by the relations

$$A = (\bar{A}^2 + \bar{\bar{A}}^2)^{1/2}, \qquad \tan\alpha = -\frac{\bar{\bar{A}}}{\bar{A}}. \qquad (131)$$

A° then becomes known by the equation

$$A^\circ = \arg_0 A - \alpha, \qquad (132)$$

$\arg_0 A$ being known from astronomical considerations.* So for components B, C, etc.

It may be added that because the hourly heights are tabulated in solar time, most of the amplitudes as brought out in the analysis must be increased by a factor a little greater than unity, known as the augmenting factor; also that most of these amplitudes must be corrected for the longitude of the moon's node by the application of a suitable factor. For series less than about a year in length, still other corrections must be applied.

NONHARMONIC REDUCTIONS, ETC.

50. The object of these reductions is to determine nonharmonic quantities from observations made upon high and low waters. Of these quantities the most important are the lunitidal intervals (HWI and LWI) and the mean range of tide (Mn). The times and heights of the individual tides depart more or less from the values which would be obtained from applying the mean lunitidal intervals to the times of transits and using the mean range. The departures have a certain kind of periodicity depending upon the inequalities to which they are due, and they may be tabulated with reference to each inequality known to exist in the tide at all places; that is, so tabulated as to follow some known astronomical argument. A set of tables thus formed may be regarded as a series of corrections to be applied to the mean tides because of the several inequalities. In case of the largest of the inequalities, it is more convenient for some purposes to have tabulated the actual values of the intervals and heights throughout the period of the inequality instead of the departures from their mean values. In case of the phase inequality the "time of tide" may be tabulated directly instead of the lunitidal intervals.†

After such tables have been obtained from the observations, one may, if he choose, analyze the tabular values, thus obtaining a set of coefficients (intervals or epochs and amplitudes) from which these tables could be reproduced.

---

* The arguments for January 1 of each year from 1850 to 1950 are given in Table 3.

† Cf. Lubbock, Phil. Trans., 1831, pp. 398, 399. Here the time of the year (i. e., the month) is used for one of the arguments and so no correction is necessary because of the equation of time.

For examples of curves of phase inequality, see Phil. Trans., 1868, last plate.

The disadvantage of the nonharmonic treatment lies in the fact that when several considerable corrections are successively applied to the mean tides, the resulting effect is not the same as it would have been had all been applied simultaneously, as in the case of nature. It therefore becomes important to tabulate each inequality not only with respect to its own argument, but also with respect to the argument of the principal or phase inequality. This necessitates a table of double entry. In some cases it might be advisable to have tables of triple entry.

For the present we shall assume that the length of the series of observations treated is sufficient for separating the various inequalities sought. Then it is obvious that, grouping the observations with respect to the argument (uniformly varying with the time, or nearly so) of any particular inequality, we shall obtain in the long run certain departures from the mean values of the lunitidal intervals and range, which may be tabulated *without making any assumption as regards the age of the inequality sought*, and so using, say, the immediately preceding transit.

Such results are of interest for theoretical purposes. For actual prediction, however, where all important inequalities should be properly applied, it is desirable to form tables of double entry.

51. *First reduction.*

The principal object of this reduction is to determine the lunitidal intervals and the mean range of tide. A specimen of first reduction is given in § 60. This shows that, for Tybee Island Light, Georgia,

$$\text{HWI} = 7^{\text{h}}\ 11^{\text{m}},\ \text{LWI} = 1^{\text{h}}\ 00^{\text{m}},\ \text{Mn} = 6{\cdot}8 \text{ feet.}$$

To roughly predict the tides for Tybee Island Light (in local time), copy down the local times of the moon's transits across the meridian of Tybee Island Light, and add the intervals, $7^{\text{h}}\ 11^{\text{m}}$ for the high waters and $1^{\text{h}}\ 00^{\text{m}}$ for the low waters. To obtain predictions in eighty-first meridian time, using Greenwich transits, add the uncorrected intervals, $7^{\text{h}}\ 21^{\text{m}}$ for high waters and $1^{\text{h}}\ 10^{\text{m}}$ for low waters. Having thus determined the times, the heights with reference to half-tide level may be roughly determined by calling the high-water heights $\frac{1}{2}$ of 6·8, or + 3·4, and the low-water heights, − 3·4; or, referred to the particular staff used, they are on an average 9·4 and 2·6 feet, respectively, as found in the reduction.

Another specimen of first reduction, with some additional matter not important for the present purpose, is given in § 30, Part III.

52. *Determination of the periods of tidal inequalities.*

The existence of several tidal inequalities can be inferred from very simple considerations; of these may be mentioned the phase, parallax, and declinational inequalities. Others would hardly be suspected without developing the potential of the tide-producing forces. For the present we may assume such a development made in terms strictly periodic, and also assume that terms of like period are to be found in the tide. Such terms, or component tides, as go through their respective periods twice a day, pretty nearly, having the subscript 2 added to the letters used to designate them, are, as already stated, called semidiurnals; and those once a day, having the subscript 1, are called diurnals.* The number of degrees per hour, i. e. the speed, may be denoted in each instance by the corresponding small letter. Looking now at the column headed "Synodic period," Table 1, it will be seen that there are, opposite the semidiurnals, the synodic periods 14·76529, 27·55456, 13·66079, 31·8119 3, 15·38734, days. These are a half synodic month, an anomalistic month, a half tropical month, the moon's evectional period, etc. To this list we should add such synodic periods as would be obtained by means of the lunar nodal components differing in period very little from M_2 and K_2, respectively.† The synodic period for the first is the node-equinox period, or about 18·6 years, and the corresponding variation in the tide is called the lunar *nodal inequality*. In regions where the water is shallow and subject to annual changes, the year should be used as one of the periods. In this way may be obtained the periods of all sensible inequalities affecting the semidaily tide, i. e., those affecting both high waters of the day alike, also both low waters.

The diurnal inequality in the tide is really made up of several partial diurnal inequalities.

* See Part II for further explanations of the symbols used to designate these components.

† In Ferrel's notation $M'_{(1,2)}$ and $M'_{(3,2)}$, United States Coast and Geodetic Survey Report 1878, p. 270. The speed of the former should be 28·981898, and not 2 × 14·489846, and that of the latter 30·084344, not 2 × 15·043275.

They affect in nearly opposite ways the two high waters of a day and also the two low waters. The periods in which they should be tabulated are those synodic periods given in Table 1 which stand opposite the diurnal components. To this list of diurnal components should be added the lunar nodals having speeds nearly equal to the speeds of K_1 and O_1, respectively.* The synodic periods just referred to are such that the same transit (upper or lower) should be adhered to throughout.

It has been supposed that the inequalities have periods of fixed lengths; but the arguments which divide up the periods may not vary exactly uniformly with the time throughout these periods. Such are styled *circular arguments.* Most inequalities in the moon's motion have little effect upon the lunitidal intervals, especially if the ages of the corresponding tidal inequalities be properly allowed for in the selection of transits. The reason for this is quite obvious. With the amplitude of the tide it is otherwise. By considering the effects upon amplitude only, and disregarding the effects upon interval, it is sometimes possible, when *non-circular arguments* are used, to throw two or more inequalities into one. For instance, if the moon's parallax be the argument (preferably noting whether it is increasing or decreasing, thereby avoiding the consideration of age), the parallax and evectional inequalities referred to above will be embraced in the tabulated height or amplitude corrections. The time corrections will be somewhat uncertain. A similar remark applies to the declinational and nodal inequalities.

If we take a month's observations about the equinoxes, the diurnal inequality will be due to the moon, and so the lunar part of K_1 is involved instead of the entire K_1.

If groups of observations are taken about the times of zero declination of the moon, the diurnal inequality will be due to the sun, and so, instead of K_1, O_1, OO, the involved components are the solar part of K_1 and P_1.

In grouping observations with respect to these arguments or periods, the transits should, as a rule, be kept distinct; for, it is an easy matter to subsequently combine values belonging to the upper and lower transits if desired. For instance, when tabulating for the inequality whose period is a tropical month, we should have, opposite the moon's right ascension or longitude, two classes of high-water lunitidal intervals (approximately equal) derived from upper and lower transits, respectively, or two such classes of intervals (differing by approximately 12 hours) derived from one transit; so for the low-water lunitidal intervals. Each of these four kinds of intervals should be accompanied by a corresponding height. In this case the diurnal and semidiurnal inequality, whose period is a tropical month or a half tropical month, are capable of being tabulated together.

The half-tide level is subject to small inequalities having the periods of the preceding tidal inequalities, or some simple fractions or multiples of such periods. These fluctuations in half-tide level may be due to long-period components (which are astronomical, meteorological, or shallow-water) or to fixed speed relations in the components of short period.† The greatest of these inequalities is, at most places, the annual; it involves the components Sa, Ssa. If high water only be observed, these inequalities in half-tide level cannot be separated from the inequalities in mean high-water heights.

---

* In Ferrel's notation $M'_{(3,1)}$ and $M'_{(6,1)}$; l. c. ante. Their speeds are 15·043275 and 13·940829.

† For numerical examples, see United States Coast Survey Report, 1868, pp. 80, 81, column headed $\frac{1}{2}(H_1' + H_2')$.

53. *List of inequalities following a single circular argument.*

Name.	Argument.	Hourly variation of argument.	Period.	Components involved.*	Numerical examples.
	In both high waters or both low waters.				
Phase.	Hour of transit.†	1°.0158958	½ synodic mo.	S_2, μ_2.	Lubbock, Phil. Trans., 1831, pp. 400–403, cols. A, B. Bache, United States Coast Survey Reports, 1853–1864. Ferrel, United States Coast Survey Report, 1868, p. 74, Table V.
Parallax.	Moon's anomaly.‡	0°.5443746	Anomalistic mo.	N_2, L_2, 2N.	Ibid., p. 76, Table VI.
Declinational.	Moon's longitude.§	1°.0980330	½ tropical mo.	K_2.	Ibid., p. 78, Table VII, left side.
Evectional.	Phase arg.-parallax arg.	0°.4715212	Monthly evectional period.	ν_2, λ_2.	Ibid., p. 82, Table IX.
Lunar nodal.	Long. of node.	0°.0022064	Node-equinox period.	$M'_{(1,2)}$. [See footnote, ante.]	Ibid., p. 81, Table VIII.
Annual.	Day of year.	0°.0410686	Tropical year.	Component ‖ having a speed $m_2 \pm \frac{360°}{\text{No. hours in a yr.}}$	Ibid., p. 80, Table VII bis.
Solar parallactic.		0°.9748272	Synodic period M_2, T_2.		
	In alternate high waters or alternate low waters.				
	Moon's longitude.§	0°.5490165	Tropical mo.	K_1, O_1, OO.¶	Ferrel, l. c., p. 78, Table VII, right side.
		0°.4668793	Synodic period M_1, P_1.	P_1.	
		1°.0933912	Synodic period M_1, Q_1.	Q_1, J_1.	
		0°.5512229	Synodic period M_1, $M'_{(3,1)}$ or $M'_{(6,1)}$.	$M'_{(3,1)}$, $M'_{(6,1)}$.	

* I. e., besides the mean tide, which consists chiefly of M_2. (See Tables 1, 2.)

† Strictly speaking, the apparent local time. For a table of single entry, and also a table of double entry where the season of the year is not one of the arguments, mean time can be used in reductions instead of apparent, and without corrections when the series is long. This argument is for fixing the difference between the right ascension of sun and moon. An equivalent argument is the age or phase of the moon.

‡ True or mean.

§ True or mean, or her right ascension. For short series the component 2N disturbs this inequality, because $2m_1$ is very nearly equal to $2n + k_2$.

‖ Shallow water meteorological.

¶ If we take a month's observations about the equinoxes, the diurnal inequality will be due to the moon, and so the lunar part of K_1 is involved instead of the entire K_1. If groups of observations are taken about the times of zero declinations of the moon, the diurnal inequality will be due to the sun, and so instead of K_1, O_1, OO, the involved components are the solar part of K_1 and P_1.

54. *Analysis of tidal inequalities following a single circular argument.*

If the lunitidal intervals and heights be classified according to an argument x, whose period is that of some tidal inequality, the resulting interval and amplitude may, according to Fourier's theorem, be written

$$B_0+M'_2 \sin x+N'_i \cos x+M'_{ii} \sin 2x+N'_{ii} \cos 2x+ \ldots , \quad (133)$$

$$\tfrac{1}{2}\,\mathrm{Mn}+M_i \cos x+N_i \sin x+M_{ii} \cos 2x+N_{ii} \sin 2x+ \ldots , \quad (134)$$

where B_0 denotes the mean lunitidal interval, Mn the mean range of tide, and i the characteristic of the inequality. These expressions may be written in the form

$$B_0+B_i \sin (x-\epsilon_i)+B_{ii} \sin (2x-\epsilon_{ii})+ \ldots , \quad (135)$$

$$\tfrac{1}{2}\,\mathrm{Mn}\,[1+R_i \cos (x-\alpha_i)+R_{ii} \cos (2x-\alpha_{ii})+ \ldots]. \quad (136)$$

$$B_i = \pm\sqrt{M'^2_i + N'^2_i} = \frac{M'_i}{\cos \varepsilon_i},\ B_{ii} = \pm\sqrt{M'^2_{ii} + N'^2_{ii}} = \frac{M'_{ii}}{\cos \varepsilon_{ii}},\ \ldots, \tag{137}$$

$$\tan \varepsilon_i = \frac{-N'_i}{M'_i},\ \tan \varepsilon_{ii} = \frac{-N'_{ii}}{M'_{ii}},\ \ldots; \tag{138}$$

$$\tfrac{1}{2}\,\mathrm{Mn}\ R_i = \pm\sqrt{M_i^2 + N_i^2} = \frac{M_i}{\cos \alpha_i},\ \tfrac{1}{2}\,\mathrm{Mn}\ R_{ii} = \pm\sqrt{M_{ii}^2 + N_{ii}^2} = \frac{M_{ii}}{\cos \alpha_{ii}} \ldots, \tag{139}$$

$$\tan \alpha_i = \frac{N_i}{M_i},\ \tan \alpha_{ii} = \frac{N_{ii}}{M_{ii}} \ldots \tag{140}$$

In reducing tides, the observations are taken in groups. For this reason the coefficients B_i, R_i, and B_{ii}, R_{ii}, as determined above, should be multiplied by the factors (a little greater than unity)

$$\frac{x_q - x_p}{2 \sin \tfrac{1}{2}(x_q - x_p)} \text{ and } \frac{x_q - x_p}{\sin (x_q - x_p)} \tag{141}$$

where x_p and x_q are the values of x at the two limits of the group of observations.

B_i or R_i may be spoken of as the *coefficient of the inequality* whose characteristic is i.

To find $B_0, M_i', N_i'; M_{ii}', N_{ii}', \ldots$ from the tabulated or classified intervals, we suppose x taken to, say, each 15°. Then we have 24 observation equations for determining B_0, M_i', etc. Let expression (133) be denoted by y_x'; then these 24 intervals are $y'_0, y'_{15}, y'_{30}, \ldots y'_{345}$. It is not difficult to show that the most probable values of the required quantities are given by the equations

$$\begin{aligned}
24\ B_0 &= y'_0 + y'_{15} + y'_{30} + \ldots + y'_{345},\\
12\ M'_i &= y'_0 \sin 0° + y'_{15} \sin 15° + y'_{30} \sin 30° + \ldots + y'_{345} \sin 345°,\\
12\ M'_{ii} &= y'_0 \sin 0° + y'_{30} \sin 30° + y'_{60} \sin 60° + \ldots + y'_{330} \sin 330,\\
12 &= M'_{iii} y'_0 \sin 0° + y'_{45} \sin 45° + y'_{90} \sin 90° + \ldots + y'_{315} \sin 315,\\
&\ldots\ldots\ldots\ldots\ldots\ldots\ldots;\\
12\ N'_i &= y' \cos 0 + y'_{15} \cos 15° + y'_{30} \cos 30° + \ldots + y'_{345} \cos 345°,\\
&\ldots\ldots\ldots\ldots\ldots\ldots\ldots
\end{aligned} \tag{142}$$

For finding $\frac{1}{2}$ Mn, $M_i, N_i, M_{ii}, N_{ii}, \ldots$, we have the above equations with all accents dropped, sines and cosines interchanged, and $\frac{1}{2}$ Mn in the place of B_0. (See §§ 49, 55.)

If we suppose that the inequality has been analyzed and certain epochs and amplitudes obtained, it is to be noted that the epochs (with single subscript) of the inequalities should be proportional to the respective ages of the latter. This implies that if an astronomical argument be taken out, on an average, a constant amount earlier or later than the particular phase of the tide (generally midway between high and low water) to which the analysis refers, the epochs must be altered by the respective variations in the arguments during this constant interval; i. e., the position of the tidal inequality is required at the time at which the astronomical argument is taken; or, what amounts to the same thing, the value of the astronomical argument is required at the phase of the tide with respect to which the analysis is carried out. Suppose high-water heights to be analyzed; they belong, on an average, to a time a constant number of hours, HWI (uncorrected), after the moon's transit. Suppose the ranges analyzed; they belong to a time $\frac{1}{2}$ (HWI + LWI) after the moon's transit. For the convenience of many places, all astronomical arguments can be taken out at the times of the moon's transit across, say, the meridian of Greenwich, and the epochs afterwards altered accordingly. The epochs require no alteration if the astronomical arguments be taken out at the particular phase of the tide to which the analysis refers. This latter method, however, seems particularly undesirable, if not practically impossible, in the case of the diurnal inequalities.*

*The fourth sentence from the end of § 46, Part III, is meaningless, and should be replaced by something like the following, viz.: The epochs α_i, α_{ii}, or ε_i, ε_{ii}, belonging to a tidal inequality whose characteristic is i, and which depend, in a measure, upon the phase of the tide analyzed, must be so modified as to suit the time at which the astronomical argument is taken; e. g., the time of transit across some given meridian, or the time of high water.

55. *Example.*

Required R_1 and α_1 for Sitka, from the month of observations tabulated in § 30, Part III.

Copy down the transits and the high and low waters, marking, for distinction, the heights which go with the lower transits. Leave no vacancies, but bring consecutive transits into consecutive positions, i. e., upon consecutive lines; similarly for the heights. This necessitates at times a splitting up of the date at left-hand margin. Combine the ranges in pairs, for the purpose of eliminating the diurnal inequality, and copy down the time of transit corresponding to each four tides so taken.

Thus:

Date.	Transit.		HW	LW	Range.
July 1	1 34	1 34	(14·6)	3·4	7·8
1	(13 59)	1 59	12·8	(8·4)	7·4
2	2 24	2 24	(14·4)	3·9	7·6
2	(14 48)	2 48	13·0	(8·3)	7·4
3	3 11	3 11	(14·0)	4·0	7·5
3	(15 34)	3 34	12·8	(7·8)	7·0
4	3 37	3 37	(13·2)	4·3	7·1
4	(16 19)	4 19	12·9	(7·6)	6·4
5	4 41	4 41	(12·5)	5·0	6·8
5	(17 04)	5 04	13·2	(7·2)	6·0
6	5 26	5 26	(12·0)	5·9	6·6
6 and 7	(17 48)	5 48	13·6	(6·6)	.....

Distribute these combined ranges according to their hour of transit, using always the nearest whole hour and counting the hour from 0 to 12. Take the sums and means of the values so distributed and determine R_1 and α_1 by equations (136), (139), and (140); or, for convenience, make use of the form labeled "Harmonic analysis of tides," Part II, § 61. The angle (α_1 or ζ) thus determined approximately represents, when converted into time at 1°·016 per hour, the time which must elapse between new or full moon and spring tides. This must be corrected for the mean lunitidal interval, and, when the series is short, for the equation of time.

For Sitka, $\frac{1}{2}$ (HWI + LWI) = $9^h\ 44^m{\cdot}8$; and uncorrected Mu = 7·31 feet, from "first reduction." The analysis gives $\alpha_1 = 26°{\cdot}7$; the hourly variation in the angle of the semimenstrual inequality is 1°·016, ∴ 1°·016 × 9·747 = 9°·9; and α_1 becomes 36°·6. The correction for not having used apparent time is — 0·483 (equation of time). [$0{\cdot}483 = \frac{24}{\text{lunar day} - \text{solar day}} \times 1{\cdot}016$.] For July 1–29 the equation of time is + $5^m{\cdot}4$; and so the correction to α_1 is — 2°·6. This leaves 34°·0 for the true value of α_1. In the harmonic notation, Part III, § 47,

$$\alpha_1 = S_2° - M_2°; \tag{143}$$

∴ Age of the phase inequality = 0·984 × 34 = 33·5 hours.

Upon applying the augmenting factor 1·0211, the R_1 ½ Mu from the analysis is 0·968 feet. The factor $F_2 = 1{\cdot}36$, Table 33, will very nearly reduce R_1 ½ Mu to its mean value. In the harmonic notation

$$R_1 \tfrac{1}{2}\,\mathrm{Mu} = S_2 + \mu_2. \tag{144}$$

Now, μ_2 is 0·01 Mu, nearly; ∴ uncorrected S_2 = 0·968 — 0·073 = 0·895 foot, and corrected S_2, 0·895 × 1·36, = 1·217 feet. To correct R_1 ½ Mu, add to 0·968, (1·217 — 0·895). ∴ R_1 ½ Mu = 1·290, R_1 = 1·278 ÷ 3·655 = 0·350.

If we use an argument varying uniformly with time, it is not necessary to have recourse to a nautical almanac. The (constant) period of the inequality is divided into 12 or 24 equal parts, and 0^h of the first day of the series is taken as origin; periods and twelfths or twenty-fourths of periods are laid off thereafter. The times of transits corresponding to the various ranges are dis-

tributed among the parts as accurately as possible. The results are then brought together and analyzed, thus giving an amplitude (R_iMn) and angle (α_i); α_i should then be altered by the speed of the inequality times the mean (uncorrected) interval. The corrected α_i denotes, when divided by the speed of the inequality, the time elapsing between 0^h of the first day of the series and the time when the inequality becomes maximum. This time, diminished by the time when the corresponding forces become a maximum, is the age of the inequality in question.[a]

56. List of inequalities following a pair of circular arguments.

Name.	Arguments.	Components involved.*	Numerical examples.
	In both high waters or both low waters.		
	Hour of transit† (upper and lower) Moon's anomaly	N_2, L_2, 2N, ν_2 λ_2	Ferrel, United States Coast Survey Report, 1868, pp. 69-71.
	Hour of transit (upper and lower) Day of year‡	K_2, T_2, R_2, and comp'ts, having speeds $m_2 \pm \frac{360^\circ}{\text{No. hours in yr.}}$	Lubbock, Phil. Trans., 1831, pp. 400-403, 412 Ferrel, United States Coast Survey Report, 1868, pp. 61-68.
	Hour of transit (upper and lower) Long. of node	$M'_{(1,2)}$, $M'_{(3,2)}$	
	In alternate high waters or alternate low waters.		
	Hour of transit (upper or lower) Day of year‡	K_1, O_1, P_1, OO	Lubbock, Phil. Trans., 1836, pp. 65-73, 245-254. Bache, United States Coast Survey Report, 1854-1864. Ferrel, United States Coast Survey Report, 1868, pp. 61-68, 100, 101.
	Hour of transit (upper or lower) Moon's anomaly	Q_1, J_1, M_1, 2Q, ρ_1§	
	Hour of transit (upper or lower) Long. of node.	$M'_{(3,1)}$, $M'_{(6,1)}$	

* I. e. besides the mean tide with phase inequality or M_2, S_2, and μ_2. If a component have a synodic period with M_2, S_2 (for semidiurnals, M_1, S_1 for diurnals), or any component involved in the inequality defined by either separate argument, equal to the period of either separate argument or the synodic period of the two arguments or the synodic period with M_2, S_2 (or M_1, S_1) of any other involved component, such component is involved in the tabular values.

† See second footnote, preceding list of inequalities.

‡ Or moon's right ascension, longitude, the number of days from extreme declination of the moon, longitude from intersection of orbit and equator, etc.

§ 2Q, ρ_1 are here used to denote components whose speeds are 12·8542862, 13·4715144, respectively. See Table 1.

57. On the use of noncircular arguments.

Tidal inequalities depend upon the difference in right ascension of sun and moon (which is usually given by the hour of transit), their parallaxes, and their declinations. Unless the ages of the inequalities be properly allowed for by selecting suitable transits, it is necessary to make a distinction between increasing and decreasing parallax or declination. These arguments are naturally suggested by the equilibrium theory of tides.

A set of tables each having the hour of transit as one argument and parallax or declination of the sun or moon for the other, is given in the Tide Tables for the British and Irish Ports, issued by the commissioners of the admiralty; the daily predictions therein published are obtained by

[a] E. g., suppose $i=2$ denotes the parallax inequality. Then

$$\text{corrected } \alpha_2 + \arg_0 M_2 - \arg_0 N_2 = M_2^\circ - N_2^\circ, \tag{145}$$

where L_2 is disregarded. From the amplitude

$$\frac{R_2\text{Mn} \times 1{\cdot}0138}{f(N_2) - \frac{1}{4} f(L_2)} = 2\,N_2. \tag{146}$$

aid of this set of tables.[a] The tides around the British Isles have very little diurnal inequality, and so are susceptible of this simple mode of treatment. See §§ 4–7.

58. *Inference of tidal inequalities from observed nonharmonic constants, etc.*

Owing to the great amount of labor involved in completely deducing tidal inequalities from observations, it does not seem advantageous to work along that line for obtaining practical results, although it may be desirable for certain theoretical purposes. In fact the results of discussions covering a long period of time (say a node-equinox period) are always instructive.

If, on the other hand, we confine our attention to determining a few quantities which fix the size and position of each important inequality, a general knowledge of tides ought to enable us to form tables, based upon these determinations, which are sensibly true at most places. For instance, if the spring, mean, and neap ranges, also the age of the phase inequality are known, the phase inequality in interval and range become approximately known at any given time by means of the following general table. The two columns at the right enable one to approximately introduce the declinational and solar parallax inequalities. The second table shows the lunar parallax inequality.[b]

Table of phase effects.

	Time.		Increase in lunitidal intervals.	Increase in semirange of tide.		Time.		Increase in lunitidal intervals.	Increase in semirange of tide.	Date.	Factor p.*
	d.	*h.*	*m.*			*d.*	*h.*	*m.*			
After spring tides.	0	00	0 $\frac{Sg-Np}{Mn\times q}$	$+\cdot 23p(Sg-Np)$		0	00	0 $\frac{Sg-Np}{Mn\times q}$	$-\cdot 29p(Sg-Np)$	Jan. 1	0·82
	0	06	−5	+·23		0	06	+13	−·29	11	0·88
	0	12	−10	+·23		0	12	+25	−·28	21	0·96
	0	18	−14	+·22		0	18	+35	−·27	31	1·04
	1	00	−19	+·21		1	00	+44	−·25	Feb. 10	1·13
	1	06	−23	+·20		1	06	+52	−·23	20	1·20
	1	12	−28	+·19		1	12	+58	−·21	Mar. 2	1·25
	1	18	−32	+·18		1	18	+62	−·18	12	1·27
	2	00	−37	+·17		2	00	+65	−·16	22	1·28
	2	06	−41	+·15		2	06	+66	−·13	Apr. 1	1·26
	2	12	−44	+·13		2	12	+67	−·10	11	1·22
	2	18	−49	+·11		2	18	+67	−·08	21	1·14
	3	00	−52	+·09		3	00	+66	−·05	May 1	1·06
	3	06	−56	+·07		3	06	+64	−·02	11	0·96
	3	12	−59	+·04		3	12	+62	·00	21	0·87
	3	18	−61	+·02		3	18	+60	+·03	31	0·77
	4	00	−63	−·01		4	00	+57	+·05	June 10	0·71
										20	0·67
										30	0·68
										July 10	0·74
										20	0·82
Before neap tides.	4	00	−57	+·05		4	00	+63	−·01	30	0·92
	3	18	−60	+·03		3	18	+61	+·02	Aug. 9	1·01
	3	12	−62	·00		3	12	+59	+·04	19	1·10
	3	06	−64	−·02		3	06	+56	+·07	29	1·18
	3	00	−66	−·05		3	00	+52	+·09	Sept. 8	1·23
	2	18	−67	−·08		2	18	+49	+·11	18	1·26
	2	12	−67	−·10		2	12	+44	+·13	28	1·26
	2	06	−66	−·13		2	06	+41	+·15	Oct. 8	1·24
	2	00	−65	−·16		2	00	+37	+·17	18	1·20
	1	18	−62	−·18		1	18	+32	+·18	28	1·14
	1	12	−58	−·21		1	12	+28	+·19	Nov. 7	1·06
	1	06	−52	−·23		1	06	+23	+·20	17	0·97
	1	00	−44	−·25		1	00	+19	+·21	27	0·89
	0	18	−35	−·27		0	18	+14	+·22	Dec. 7	0·83
	0	12	−25	−·28		0	12	+10	+·23	17	0·79
	0	06	−13	−·29		0	06	+5	+·23	27	0·80
	0	00	0	−·29		0	00	0	+·23	Jan. 6	0·85

*The factor p applies to the "increase in semirange of tide," and not to the "increase in lunitidal intervals." It is due to the declinations of the sun and moon and to the solar parallax.

[a] In these the phase inequality is obtained from observation. The inequalities due to parallax and declination of sun and moon are in accordance with Bernoulli's equilibrium theory. They are as tabulated by Lubbock in the *Philosophical Transactions for 1836*, pp. 58, 59, 257–262. For Devonport these, too, are based upon observations; of course the table for correction for moon's declination would naturally, in this case, involve that due to the sun.

[b] These tables are based upon Tables 24, 25, and 31.

Factor expressing the effect of the moon's parallax upon the mean range of tide.

	Time.	Factor q.		Time.	Factor q.		Time.	Factor q.		Time.	Factor q.
	d.			*d.*			*d.*			*d.*	
After perigean tides.	0	1·17	Before apogean tides.	7	0·99	After apogean tides.	0	0·86	Before perigean tides.	7	0·98
	1	1·16		6	0·96		1	0·86		6	1·02
	2	1·15		5	0·93		2	0·87		5	1·06
	3	1·13		4	0·90		3	0·88		4	1·09
	4	1·09		3	0·88		4	0·90		3	1·13
	5	1·06		2	0·87		5	0·93		2	1·15
	6	1·02		1	0·86		6	0·96		1	1·16
	7	0·98		0	0·86		7	0·99		0	1·17

In the column headed "Increase in lunitidal intervals" the negative values are often spoken of as the *priming* and the positive ones as the *lagging* of the tide.

The *vulgar establishment*, being the interval at "full and change," may be obtained from the mean lunitidal interval by entering the first table as many hours before spring tides as are contained in the age of the phase inequality.

In making use of these tables for prediction purposes, the mean range (Mn) should be first multiplied by the factor q expressing the parallax effect; this corrected range should then be used in ascertaining the variation due to phase in the lunitidal interval and in obtaining the semirange of tide.

If several "tables of phase effects" like the above be constructed with as many assumed values of S_2/M_2, or of $(Sg - Np)/2Mn$, the accuracy of the results will be somewhat increased. This table is based upon Table 24, wherein S_2 M_2 was taken as 0·46531.

Of course this table of parallax effect can be replaced by a more accurate one involving the perigean and apogean ranges (Pn, An); but to realize this increased accuracy these ranges would have to be known from observation, and the age of the parallax inequality should also be observed and not assumed to be that of the phase inequality.

A general table giving the diurnal inequality at any time, and involving certain nonharmonic constants, would hardly be feasible, because of the numerous arguments involved.* Nevertheless, constants like the tropic high-and low-water inequalities in height (HWQ, LWQ), the corresponding intervals, the great and small tropic ranges (Gc, Sc) are serviceable in describing the character of the tide.

In Chapter III, Part III, a scheme is given for the determination of the following nonharmonic quantities:

HWI	Mn
LWI	Gc
Tropic HHWI	Sc
Tropic LHWI	Gt
Tropic LLWI	Sl
Tropic HLWI	Sg
Age of phase inequality	Np
Age of parallax inequality	Pn
Age of diurnal inequality	An
	HWQ
	LWQ
	LW (on staff)
	Tropic LLW (on staff)
	Mean LLW (on staff)

In the determination of these, the portion of the work relating exclusively to harmonic constants may, of course, be omitted.

In the reductions for finding the spring range, and especially that for finding the neap (Part III, §§ 29, 30), it is important to know the exact age of the inequality and to then use a group no

* See §§ 66, 67, Part III.

more extensive than is necessary, say four tides in case of a long series and eight, for a short series. For this reason the age should be found by the inequality method, § 55 (especially where there are shallow water components), instead of by noting when the interval has its mean value.

In order to obtain good results and to avoid the labor of making certain corrections, series six or twelve months in length should be used. If the harmonic constants have been determined from hourly ordinates or from high and low waters in accordance with Part II, the ages derived from them may be used to advantage in taking out the above quantities. In all cases the longer the series the narrower may be the group, and so the more definite the quantities found.

The nonharmonic constants given in the Tide Tables by the United States Coast and Geodetic Survey are

HWI, LWI, tropic HHWI, tropic LLWI,

Mn, Sg, Np, Gc, HWQ, LWQ, D_1HWI,

$2D_1$, mean sea level above tropic LLW. (147)

$2D_1$ denotes the tropic range of the diurnal wave and D_1HWI its lunitidal interval. The quantities ranking next in importance to those given are probably the ages of the phase and diurnal inequalities.

These can be compared and other nonharmonic constants supplied by aid of the following exact or approximate theoretical relations between the various ranges, intervals, etc., obtained, directly or indirectly, from Part III:

$$2\,\mathrm{Mn} = \mathrm{Sg} + \mathrm{Np} + \tfrac{1}{4}\frac{(\mathrm{Sg}-\mathrm{Np})^2}{\mathrm{Sg}+\mathrm{Np}}. \tag{148}$$

$$2\,\mathrm{Mn} = \mathrm{Gt} + \mathrm{Sl}. \tag{149}$$

$$\mathrm{Gc} - \mathrm{Sc} = \mathrm{HWQ} + \mathrm{LWQ}. \tag{150}$$

$$\mathrm{Gt} = \tfrac{3}{4}\,\mathrm{Gc} + \tfrac{1}{4}\,\mathrm{Mn}, \text{ or } \mathrm{Mn} + \tfrac{1}{3}\,(\mathrm{HWQ} + \mathrm{LWQ}); \tag{151}$$

the former to be used where the greater inequality equals or exceeds, say, $\frac{1}{4}$ Mn; the latter, when both inequalities are small.

The depression of average lower low water below mean low water is

$$\frac{\mathrm{LWQ}}{3} + \frac{1}{\mathrm{LWQ}}\left[\frac{\mathrm{Gc}-\mathrm{Mn}}{5}\right]^2, \text{ when LWQ} > \mathrm{HWQ}; \tag{152}$$

or

$$\mathrm{Gt} - \mathrm{Mn} - \frac{\mathrm{HWQ}}{3} - \frac{1}{\mathrm{HWQ}}\left[\frac{\mathrm{Gc}-\mathrm{Mn}}{5}\right]^2, \text{ when HWQ} > \mathrm{LWQ}. \tag{153}$$

$\frac{1}{2}$ Mn = depression of mean low water below mean sea level. (154)

$\frac{1}{2}$ Sg = depression of low-water springs below mean sea level. (155)

$$2\,\mathrm{D_1} = \sqrt{\mathrm{HWQ}^2 + \mathrm{LWQ}^2}. \tag{156}$$

$$\mathrm{HWI} - \mathrm{LWI} = \text{duration of rise}, \tag{157}$$

$$\mathrm{LWI} - \mathrm{HWI} = \text{duration of fall}, \tag{158}$$

adding $12^h\ 25^m$ when necessary to make the result positive.

$$\text{Tropic HHWI} + \text{tropic LHWI} + \text{tropic LLWI} + \text{tropic HLWI} = 2\,(\mathrm{HWI} + \mathrm{LWI}); \tag{159}$$

and, less accurately,

$$\text{Tropic LHWI} = 2\,\mathrm{HWI} - \text{tropic HHWI}, \tag{160}$$

$$\text{Tropic HLWI} = 2\,\mathrm{LWI} - \text{tropic LLWI}. \tag{161}$$

$$\mathrm{Mc} = \tfrac{1}{2}\,(\mathrm{Gc} + \mathrm{Sc}). \tag{162}$$

$$Gc = Mc + \tfrac{1}{2}(HWQ + LWQ). \quad (163)$$

$$\text{Tropic LLW below MSL} = \tfrac{1}{2}\,Mc + \tfrac{1}{2}\,LWQ, \text{ nearly.} \quad (164)$$

$$\text{Indian harmonic tide plane below MSL} = 0{\cdot}49\,(Sg + 2\,D_1). \quad (165)$$

59. *Prediction direct from observation.*

Suppose that a person start with a blank book containing as many pages as there are days in a year and labeled accordingly. Suppose the page ruled into 12 (or 24) columns, one for each possible degree of the moon's declination, viz., 18° to 29°. Let the page be divided horizontally into 15 equal strips, one for each day of the moon's age, reckoned from full moon as well as from new.

In each of the rectangles thus formed let the observed heights and lunitidal intervals (obtained from the observed times and properly marked) be recorded. If observations be made throughout the node-equinox period, or about nineteen years, and thus tabulated, predictions can be made by referring to this record in the following manner:

Turn to the day of the year for which predictions are required. Select such tabular values as correspond most nearly to the age and declination of the moon for the given day. If no such tabular value can be found upon the page for the day in question, go a few days forward or backward until a tabular value is found which has very nearly the required arguments. The lunitidal intervals there tabulated give, when applied to the moon's transits for the day in question, the times of the tides. The heights are the tabular values unaltered. If in making the tabulation the effect of parallax upon the height of the tide is allowed for, it may be roughly introduced, when predictions are required, by multiplying the range of the tide by the cube of the value of the parallax for the day divided by the cube of its mean value, or by making use of the second table of § 58.

The moon's transits, declination, age, and parallax, when used, are supposed to be taken from the Nautical Almanac.

A very convenient method for obtaining fairly good predictions at a station having either great or small diurnal inequality, is the following:

Take a year's observed high and low waters, or preferably a year's accurate predictions, and copy down alongside each date the time of the moon's superior transit. To predict for any given day of any year, use that part of the year tabulated which is about the same season of the year as is the given date. Find a day having, as nearly as may be, the same hour of transit as has the given day. The times and heights of the tides for that day will be approximately the values required.

If only very rough predictions are required, all inequalities may be omitted. In this case it is sufficient to know the high-water lunitidal interval and the mean range of tide. This has been explained in § 51.

In regions where the diurnal inequality is small the page should be divided with reference to the various values of the moon's parallax instead of declination.

60. *Phase reductions.*

Along the coast of Europe and the Atlantic coast of America, the region of the West Indies excepted, the tide is of the semidiurnal type. Consequently, the greatest inequality is the phase or semimenstrual, due to the sun. This is more especially true of times than of heights.

If a person has secured a month of observations upon high and low water for any place along these coasts, he can, with very little computation, obtain reasonably good predictions. He has only to tabulate the tides, along with the times of the moon's transits, take the lunitidal intervals (using the transit immediately preceding) and distribute the intervals and heights according to the hour of transit, going from 0 to 12. This distribution constitutes a "second" or "phase reduction," an example of which is given below. Or, he may tabulate the times and heights without using intervals, according to the hour of the moon's transit. In the latter case the time of the tide can be ascertained without even adding the interval to the time of transit, because the times of the tide are supposed to be tabulated with reference to the hour of transit as an argument.

If the observations are less than a year in extent, their times, as well as the times of the transits, should, strictly speaking, be changed into apparent time before making a phase reduction; or the average value of the equation of time (Table 30) for the period of observations may

be substracted from the "hour of transit argument" of the reduction results, thus obtaining the same prediction table as before. The predictions made therefrom are, of course, in apparent time and must be changed into mean time by Table 30.

On the Atlantic coast of the United States, the phase inequality being small, the kind of time used is quite immaterial, mean time being almost as satisfactory as apparent. The prediction table got out in the kind of mean time used in the observations can be adapted to another kind of mean time by applying a constant (equal to the difference between the two kinds of time) to the tabular values.

An example of the method of making a "first" and a "phase" (or "second") reduction, is given for Tybee Island Light, Savannah River Entrance, Georgia, for May 1–29, 1891. As a matter of convenience, the Greenwich time of the moon's transit is taken directly from the Nautical Almanac, merely changing astronomical to civil time. The observations were made in eighty-first meridian time, which is $5^h\ 24^m$ west, while the local meridian is $5^h\ 23^m{\cdot}37$ west. In tabulating the observations two lines are given to each day. All hours less than 12 are in the morning; all greater are in the afternoon, and when diminished by 12 give the usual reckoning; for instance, 15^h is 3 p. m.

Tybee Island Light, Georgia.

First reduction.

Date.	Moon's transits.	Time of— HW	Time of— LW	Lunitidal interval. HW	Lunitidal interval. LW	Height of— HW	Height of— LW	Remarks.
1891.	h. m.	h. m.	h. m.	h. m.	h. m.	feet.	feet.	
	(17 35)							Lat. = 32 01 20 N.
May 1	6 04	0 39	7 02	(7 04)	0 58	9·3	2·5	Long. = 80 50 37 = $5^h\ 23^m{\cdot}37$ W.
	(18 33)	13 10	19 20	7 06	(0 47)	8·3	2·7	
2	7 01	1 45	8 03	(7 12)	1 02	9·1	2·2	
	(19 28)	14 20	20 27	7 19	(0 59)	9·0	2·7	
3	7 55	2 45	9 05	(7 17)	1 10	9·3	2·0	
	(20 21)	15 07	21 40	7 12	(1 19)	9·5	2·6	
4	8 47	3 52	10 04	(7 31)	1 17	9·5	1·7	Observations in eighty-first meridian time = $5^h\ 24^m$
	(21 12)	16 05	22 45	7 18	(1 33)	10·0	2·5	
5	9 37	4 53	11 05	(7 41)	1 28	9·7	1·6	
	(22 02)	17 12	23 30	7 35	(1 28)	10·4	2·3	
6	10 28	5 55	.....	(7 53)	.....	9·8	.....	
	(22 53)	18 20	12 04	7 52	1 36	10·8	1·5	Greenwich transits
7	11 18	6 36	0 48	(7 43)	(1 55)	9·9	2·0	
	(23 44)	18 50	12 56	7 32	1 38	11·1	1·3	
8	.....	7 27	1 34	(7 43)	(1 50)	9·9	1·8	
	12 11	19 35	13 36	7 24	1 25	11·4	1·2	
9	(0 38)	8 05	2 09	(7 27)	(1 31)	9·8	1·7	To convert Greenwich transits to local transits, observation time, add $L - S + 0{\cdot}035\ (L - E) = 10^m{\cdot}7$, consequently to correct intervals subtract $10^m{\cdot}7$
	13 05	20 31	14 19	7 26	1 14	11·0	1·4	
10	(1 33)	9 04	3 00	(7 31)	(1 27)	9·4	1·9	
	14 01	21 16	14 59	7 15	0 58	10·5	1·8	
11	(2 29)	9 35	3 42	(7 06)	(1 13)	8·8	2·3	
	14 57	21 57	15 38	7 00	0 41	10·1	2·2	
12	(3 25)	10 30	4 19	(7 05)	(0 54)	8·6	2·7	
	15 52	22 35	16 25	6 43	0 33	9·8	2·6	
13	(4 19)	11 18	4 55	(6 59)	(0 36)	8·4	3·1	
	16 45	23 22	17 18	6 37	0 33	9·5	3·2	
14	(5 10)	.....	6 00	.....	(0 50)	.....	3·4	
	17 34	12 06	18 22	(6 56)	0 48	8·2	3·6	
15	(5 58)	0 32	6 47	6 58	(0 49)	9·1	3·7	
	18 21	13 09	19 05	(7 11)	0 44	8·1	3·9	
16	(6 43)	1 33	7 34	7 12	(0 51)	9·0	3·8	
	19 04	14 05	20 15	(7 22)	1 11	8·4	4·2	
17	(7 25)	2 15	8 22	7 11	(0 57)	8·8	3·8	
	19 46	15 13	21 17	(7 48)	1 31	8·7	4·1	
18	(8 06)	3 11	9 12	7 25	(1 06)	8·8	3·5	
	20 26	15 58	22 12	(7 52)	1 46	8·9	3·6	
19	(8 47)	4 08	10 04	7 42	(1 17)	8·7	2·9	
	21 07	16 30	22 44	(7 43)	1 37	9·1	3·0	
20	(9 27)	4 40	10 54	7 33	(1 27)	8·6	2·6	
	21 48	17 19	23 35	(7 52)	1 47	9·4	2·8	
21	(10 10)	5 31	11 41	7 43	(1 31)	8·8	2·5	
	22 32	18 00	.....	(7 50)	.....	9·7	.....	
22	(10 55)	6 27	0 30	7 55	1 58	8·9	2·7	
	23 18	18 50	12 25	(7 55)	(1 30)	10·0	2·4	

	HWI 56		LWI 56		HW 56	LW 56
	h.	m.	h.	m.	feet	feet
Sums	383	1742	34	1908	530·0	146·0
Means	7	21·5	1	10·5	9·46	2·61

Tybee Island Light, Georgia—Continued.

First reduction—Continued.

Date.	Moon's transits.	Time of— HW	Time of— LW	Lunitidal interval. HW	Lunitidal interval. LW	Height of— HW	Height of— LW	Remarks.
1891.	*h.* *m.*	*h.* *m.*	*h.* *m.*	*h.* *m.*	*h.* *m.*	*feet.*	*feet.*	
May 23	(11 43)	7 00	1 10	7 42	1 52	9·0	2·6	Mn = 9·46 — 2·61 = 6·85 feet
	.....	19 15	13 05	(7 32)	(1 22)	10·4	2·2	
24	0 09	7 37	1 52	7 28	1 43	9·1	2·5	Correcting intervals for transits
	(12 35)	20 02	13 50	(7 27)	(1 15)	10·5	2·2	
25	1 03	8 20	2 33	7 17	1 30	9·1	2·3	
	(13 32)	20 54	14 27	(7 22)	(0 55)	10·5	2·2	HWI = 7h 11m
26	2 01	9 14	3 19	7 13	1 18	9·1	2·4	LWI = 1 00
	(14 30)	21 38	15 11	(7 08)	(0 41)	10·4	2·4	
27	3 00	9 58	4 00	6 58	1 00	9·0	2·6	
	(15 30)	22 30	15 46	(7 00)	(0 16)	10·3	2·6	
28	4 00	10 49	4 30	6 49	0 30	9·1	2·8	
	(16 28)	23 12	16 47	(6 44)	(0 19)	10·2	2·9	
29	4 57	11 40	5 43	6 43	0 46	9·2	3·1	
	(17 24)		18 00		(0 36)		3·2	

Tybee Island Light, Georgia.

Phase or second reduction for high water. May 1–29, 1891.

Moon's upper and lower transits.	Lunitidal interval.	Height on staff.	No. of observations.	Moon's upper and lower transits.	Lunitidal interval.	Height on staff.	No. of observations.	Moon's upper and lower transits.	Lunitidal interval.	Height on staff.	No. of observations.
h. *m.*	*h.* *m.*	*feet.*		*h.* *m.*	*h.* *m.*	*feet.*		*h.* *m.*	*h.* *m.*	*feet.*	
12 11	7 24	11·4		13 05	7 26	11·0		14 01	7 15	10·5	
(0 38)	7 27	9·8		(1 33)	7 31	9·4		(2 29)	7 06	8·8	
0 09	7 28	9·1		1 03	7 17	9·1		14 57	7 00	10·1	
(12 35)	7 27	10·5		(13 32)	7 22	10·5		2 01	7 13	9·1	
								(14 30)	7 08	10·4	
93	106	40·8	4	73	96	40·0	4	118	42	48·9	5
0 23	7 26	10·20		1 18	7 24	10·00		2 24	7 08	9·78	
(3 25)	7 05	8·6		(4 19)	6 59	8·4		(5 10)	6 56	8·2	
15 52	6 43	9·8		16 45	6 37	9·5		17 34	6 58	9·1	
3 00	6 58	9·0		4 00	6 49	9·1		5 58	7 11	8·1	
(15 30)	7 00	10·3		(16 28)	6 44	10·2		(17 35)	7 04	9·3	
				4 57	6 43	9·2					
107	226	37·7	4	149	232	46·4	5	137	09	34·7	4
3 27	6 56	9·42		4 30	6 46	9·28		5 34	7 02	8·68	
6 04	7 06	8·3		7 01	7 19	9·0		(20 21)	7 31	9·5	
(18 33)	7 12	9·1		(19 28)	7 17	9·3		8 47	7 18	10·0	
18 21	7 12	9·0		7 55	7 12	9·5		(8 06)	7 52	8·9	
(6 43)	7 22	8·4		19 04	7 11	8·8		20 26	7 42	8·7	
				(7 25	7 48	8·7		(8 47)	7 43	9·1	
				19 46	7 25	8·8					
101	52	34·8	4	159	132	54·1	6	147	186	46·2	5
6 25	7 13	8·70		7 26	7 22	9·02		8 29	7 37	9·24	
(21 12)	7 41	9·7		(22 02)	7 53	9·8		11 18	7 32	11·1	
9 37	7 35	10·4		10 28	7 52	10·8		(23 44)	7 43	9·9	
21 07	7 33	8·6		(22 53)	7 43	9·9		23 18	7 42	9·0	
(9 27)	7 52	9·4		(10 10)	7 50	9·7		(11 43)	7 32	10·4	
21 48	7 43	8·8		22 32	7 55	8·9					
				(10 55)	7 55	10·0					
131	204	46·9	5	180	308	59·1	6	123	149	40·4	4
9 26	7 41	9·38		10 30	7 51	9·85		11 31	7 37	10·10	

Tybee Island Light, Georgia—Continued.

Phase or second reduction for low water. May 1–29, 1891.

Moon's upper and lower transits.	Lunitidal interval.	Height on staff.	No. of observations.	Moon's upper and lower transits.	Lunitidal interval.	Height on staff.	No. of observations.	Moon's upper and lower transits.	Lunitidal interval.	Height on staff.	No. of observations.
h. m.	*h. m.*	*feet.*		*h. m.*	*h. m.*	*feet.*		*h. m.*	*h. m.*	*feet.*	
12 11	1 25	1·2		13 05	1 14	1·4		14 01	0 58	1·8	
(0 38)	1 31	1·7		(1 33)	1 27	1·9		(2 29)	1 13	2·3	
0 09	1 43	2·5		1 03	1 30	2·3		14 57	0 41	2·2	
(12 35)	1 15	2·2		(13 32)	0 55	2·2		2 01	1 18	2·4	
								(14 30)	0 41	2·4	
93	114	7·6	4	73	66	7·8	4	118	291	11·1	5
0 23	1 28	1·90		1 18	1 16	1·95		2 24	0 58	2·22	
(3 25)	0 54	2·7		(4 19)	0 36	3·1		(5 10)	0 50	3·4	
15 52	0 33	2·6		16 45	0 33	3·2		17 34	0 48	3·6	
3 00	1 00	2·6		4 00	0 30	2·8		(5 58)	0 49	3·7	
(15 30)	0 16	2·6		(16 28)	0 19	2·9		(17 24)	0 36	3·2	
				4 57	0 46	3·1					
107	163	10·5	4	149	164	15·1	5	126	183	13·9	4
3 27	0 41	2·62		4 30	0 33	3·02		5 32	0 46	3·48	
6 04	0 58	2·5		7 01	1 02	2·2		(20 21)	1 19	2·6	
(18 33)	0 47	2·7		(19 28)	0 59	2·7		8 47	1 17	1·7	
18 21	0 44	3·9		7 55	1 10	2·0		(8 06)	1 06	3·5	
(6 43)	0 51	3·8		19 04	1 11	4·2		20 26	1 46	3·6	
				(7 25)	0 57	3·8		(8 47)	1 17	2·9	
				19 46	1 31	4·1					
101	200	12·9	4	159	50	19·0	6	147	105	14·3	5
6 25	0 50	3·22		7 26	1 08	3·17		8 29	1 21	2·86	
(21 12)	1 33	2·5		(22 02)	1 28	2·3		11 18	1 38	1·3	
9 37	1 28	1·6		10 28	1 36	1·5		(23 44)	1 50	1·8	
21 07	1 37	3·0		(22 53)	1 55	2·0		23 18	1 52	2·6	
(9 27)	1 27	2·6		(10 10)	1 31	2·5		(11 43)	1 22	2·2	
21 48	1 47	2·8		22 32	1 58	2·7					
				(10 55)	1 30	2·4					
131	172	12·5	5	180	238	13·4	6	123	162	7·9	4
9 26	1 34	2·50		10 30	1 40	2·23		11 31	1 40	1·98	

Phase or second reduction for HW *and* LW. May 1–29, 1891.

RECAPITULATION.

High water.				Low water.			
Moon's upper and lower transits.	Lunitidal interval.	Height on staff.	No. of observations.	Moon's upper and lower transits.	Lunitidal interval.	Height on staff.	No. of observations.
h. m.	*h. m.*	*feet.*		*h. m.*	*h. m.*	*feet.*	
0 23	7 26	10·20	4	0 23	1 28	1·90	4
1 18	7 24	10·00	4	1 18	1 16	1·95	4
2 24	7 08	9·78	5	2 24	0 58	2·22	5
3 27	6 56	9·42	4	3 27	0 41	2·62	4
4 30	6 46	9·28	5	4 30	0 33	3·02	5
5 34	7 02	8·68	4	5 32	0 46	3·48	4
6 25	7 13	8·70	4	6 25	0 50	3·22	4
7 26	7 22	9·02	6	7 26	1 08	3·17	6
8 29	7 37	9·24	5	8 29	1 21	2·86	5
9 26	7 41	9·38	5	9 26	1 34	2·50	5
10 30	7 51	9·85	6	10 30	1 40	2·23	6
11 31	7 37	10·10	4	11 31	1 40	1·98	4
	243	113·65	56		115	31·15	56
	7 20·2	9·47			1 09·6	2·60	

The first reduction is made by subtracting each transit from the time of high or low water which directly follows it, thus filling out the columns headed "Lunitidal interval." If the observations had been taken in local time, and the local time of the moon's transit across the local meridian had been used, these lunitidal intervals would represent the lag of the tide behind the moon; but in this example each interval is to a certain extent fictitious, and requires a correction in order to reduce it to its true local value. As a general rule, however, there is no need of correcting each interval, for only average intervals are of use, so that the mean of all the high-water and of the low-water intervals can be corrected by applying a constant once for all, which is obtained as follows:

Let S = west longitude in time of the time meridian used.
L = " " " " station.
E = " " " " ephemeris used for transits.

Then the correction to reduce the observation time to local time is

$$S - L, \tag{166}$$

and the correction to the intervals, due to the motion of the moon in her orbit while passing from the meridian of the ephemeris to the meridian of the station, is

$$0{\cdot}035\ (E - L). \tag{167}$$

Combining both corrections, we have for the entire interval correction expressed in hours

$$S - L + 0{\cdot}035\ (E - L). \tag{168}$$

In this example $S = 5^h{\cdot}400$, $L = 5^h{\cdot}390$, and $E = 0^h{\cdot}000$; hence, the correction is $-\ 10^m{\cdot}7$, as stated on the first reduction sheet.

The phase on second reduction is made by distributing the intervals and heights of the first reduction according to the hour of the moon's transit. All intervals for high water which were obtained by using transits occurring between $0^h\ 00^m$ and $0^h\ 59^m$, as also between $12^h\ 00^m$ and $12^h\ 59^m$, together with the corresponding heights, are thrown into one group; those intervals resulting from transits between $1^h\ 00^m$ and $1^h\ 59^m$, and between $13^h\ 00^m$ and $13^h\ 59^m$, are also collected together into one group; and similarly for each hour of the moon's transit. The same distribution is then made for the low-water intervals and heights. Each group is summed and the mean obtained by dividing by the number of observations. The twelve means, one for each hour of transit from 0 to 11, are then brought together into a tabular form, designated as a "Recapitulation," and the mean of all obtained by dividing the sum by twelve. Before using these final mean intervals as the establishment for high or low water, they must be corrected in the same manner as the first reduction results were, which in this case is done by subtracting 10·7 minutes from each.

61. *Rough prediction of tides from phase reduction.*

The values contained in the recapitulation of the phase reduction may be represented graphically by plotting them upon profile paper and joining the points thus given with a curved or broken line. (See Fig. 8.) These curves can be used for making approximate predictions of the tide at the station, but their irregularities should first be smoothed out by estimation of the eye, or preferably by means of the Fourier series, using only those terms of the series whose coefficients have the subscripts 1 and 2, and the even-numbered hours, in the form given in § 71, Part II. In order to make this method of prediction clear, an example is given of the predicted times and heights of high and low waters at Tybee Island Light, Georgia, on the first five days of January, 1898, using the uncorrected curves of Fig. 8, although the results must be rougher than those which might have been obtained by aid of § 55.

In this example the Greenwich times of the moon's transits are taken from the Ephemeris or Nautical Almanac, merely changing the time into civil reckoning. The curves are then read at the times of transit, furnishing the values given in the lines marked HWI (high-water interval) and LWI (low-water interval). These readings of the interval curves added to the time of transit give the approximate times of high and low water. The height curves are also read at the times of transit. No distinction is made between upper and lower transits in this method of prediction; and whenever the hours of transit exceed twelve they are reckoned as applying to the curves at a time twelve hours earlier, but the real value of the time of transit is set down in the computation.

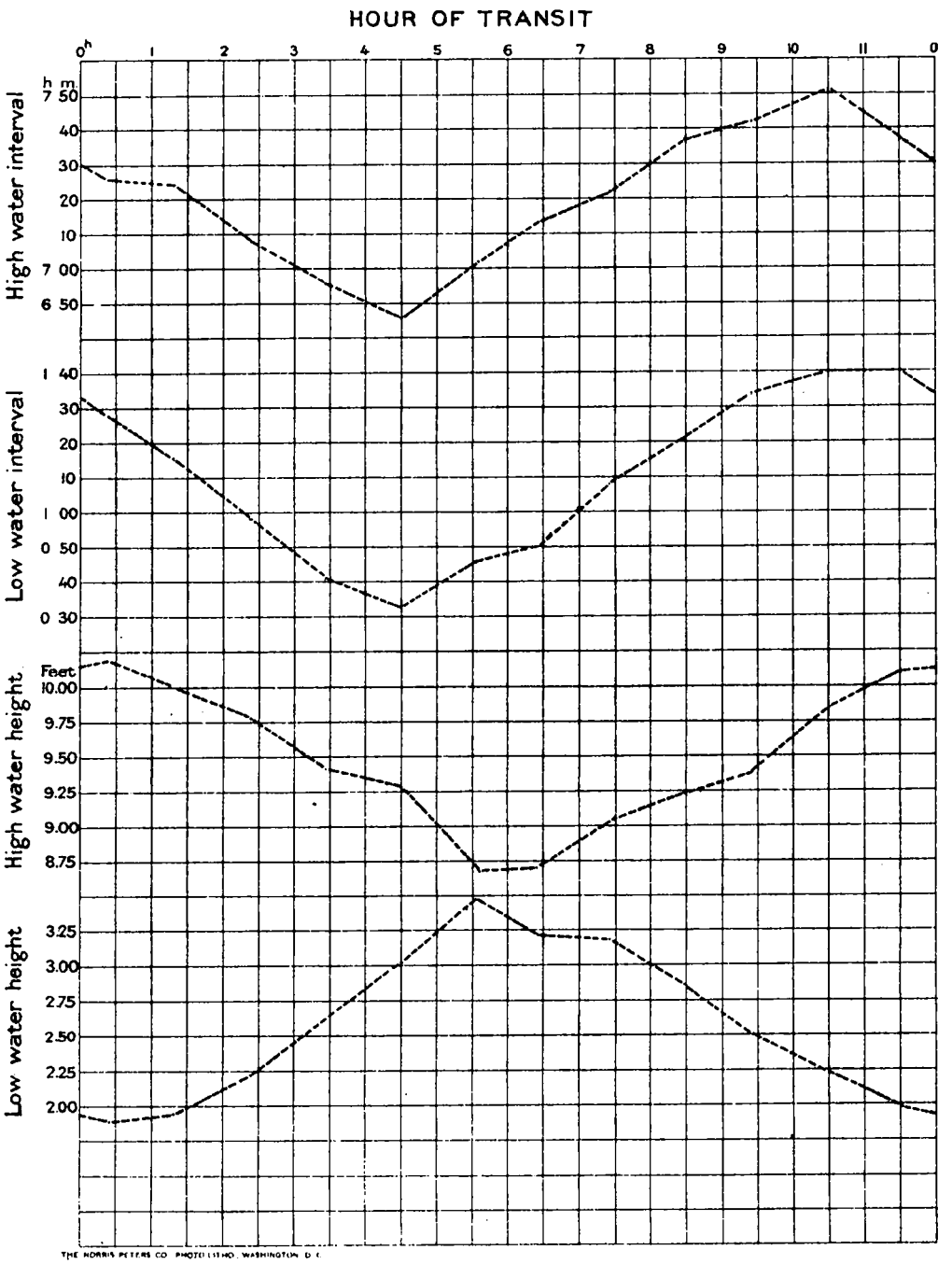

Fig:8. Phase inequality, Tybee Id. Light, Ga.

Tybee Island Light, Georgia.

PREDICTION OF TIDES FROM PHASE REDUCTION.

	Dec., 1897.	January, 1898.				
	31	1	2	3	4	5
	h. *m.*	*h.* *m.*	*h.* *m.*	*h.* *m.*	*h.* *m.*	*h.* *m.*
HWI	7 14	7 20	7 29	7 38	7 43	7 50
☽'s upper transit	18 29	19 13	19 59	20 46	21 36	22 26
LWI	0 51	1 05	1 14	1 25	1 35	1 40
Time of HW	25 43	26 33	27 28	28 24	29 19	30 16
Time of LW	19 20	20 18	21 13	22 11	23 11	24 06
	ft.	*ft.*	*ft.*	*ft.*	*ft.*	*ft.*
Height of HW	8·7	8·9	9·1	9·3	9·4	9·8
Height of LW	3·2	3·2	3·0	2·7	2·5	2·2
	h. *m.*	*h.* *m.*	*h.* *m.*	*h.* *m.*	*h.* *m.*	*h.* *m.*
HWI	7 09	7 17	7 24	7 35	7 40	7 47
☽'s lower transit	6 07	6 51	7 36	8 22	9 11	10 01
LWI	0 48	0 58	1 09	1 20	1 30	1 38
Time of HW	13 16	14 08	15 00	15 57	16 51	17 48
Time of LW	6 55	7 49	8 45	9 42	10 41	11 39
	ft.	*ft.*	*ft.*	*ft.*	*ft.*	*ft.*
Height of HW	8·7	8·8	9·1	9·2	9·3	9·6
Height of LW	3·3	3·2	3·1	2·9	2·6	2·4

It will be observed that the computed time of tide frequently comes out greater than twenty-four hours; this is to be understood as indicating the number of hours which have elapsed from midnight, beginning the day on which the transit used occurs, until the given tide. By subtracting twenty-four hours and increasing the day by one such times may be expressed in the usual reckoning; for instance, the high water given as $25^h\ 43^m$ on December 31, 1897, corresponds to $1^h\ 43^m$ on January 1, 1898. The predicted times are expressed in eighty-first meridian time, the same as the observations were taken in. The predicted heights are as they would read on the tide staff upon which the observations were made. From the phase reduction it appears that mean low water read 2·6 feet on the staff; hence to reduce these predicted heights to the plane of mean low water subtract 2·6 feet from each. In case one desires to make predictions in any kind of time other than that in which the observations were taken and to refer the heights to any given plane of reference, the table of recapitulated values of the phase reduction should be so modified as to satisfy these conditions; and then the values should be plotted, and the curves used as before.

The phase inequality in height may be reduced to its mean value by dividing by the "factor for (Sg — Np)" § 58, and the remark there made concerning the effect of parallax upon the range applies here also.

62. *Types of tide.*

Observations show that cotidal lines off a shore or reef are nearly parallel to the same, resembling somewhat the contours of equal depths. This is what would naturally follow from the consideration of a free wave propagated over shallow areas. The same remark applies with about the same degree of precision to lines of equal lunitidal interval.

Example.—Lunitidal intervals for the (outer) coast of the United States:

Region.	Interval.		
	Semidaily tide HWI.	Diurnal wave Tropic D 1 HWI.	Difference.
	h.	*h.*	*h.*
Eastport to N. and E. shores of Nantucket and Marthas Vineyard	11	8	+3
S. and W. shore of do. to Florida Strait	7½	8	−½
Cape St. Lucas to Cape Flattery	8½ to 12½ or 0	5 to 8½	+4
Cape Flattery to Kadiak Id.	0	8½	+4

These intervals must be increased for bays or tidal rivers. On the Atlantic coast the diurnal wave is small in comparison with the semidiurnal. On the Pacific coast the two may approach equality.

To ascertain the type of tide from the above values, draw a diurnal and a semidiurnal wave; then combine the two by adding the ordinates algebraically. (See Figs. 1, 7.)

The (tropic) diurnal high waters being three hours in advance of the semidiurnal high waters in the northern New England region, it follows that there is about the same inequality in the high as in the low waters, that the sequence of tide is from higher high to lower low, that the tropic higher high-water interval is less than HWI and should be marked *a*, that the tropic lower low-water interval should be greater than LWI and marked *b* if taken about six hours less than HWI: *a* indicates that the interval is to be applied to $\begin{matrix}\text{an upper}\\ \text{a lower}\end{matrix}$ transit, the moon's declination being $\begin{matrix}\text{north;}\\ \text{south;}\end{matrix}$ *b* indicates that the interval is to be applied to $\begin{matrix}\text{a lower}\\ \text{an upper}\end{matrix}$ transit, the moon's declination being $\begin{matrix}\text{north.*}\\ \text{south.}\end{matrix}$

For the remainder of the Atlantic coast, the high waters of both waves nearly coincide, thereby putting nearly all of the height inequality in the high waters. In fact, the low-water inequality is so small that the sequence of the tropic tides does not remain fixed throughout the year. (See § 21, Part III.) The tropic high-water interval is almost exactly equal to HWI and should be marked *a*.

On the Pacific coast the greater height inequality is, obviously, in the low waters, but there is a good amount in the high waters. The sequence is higher high to lower low. The tropic higher high-water interval is less than HWI, and should be marked *a* unless the small value (about zero) be used, in which case it should be marked *b*. The tropic lower low-water interval is greater than LWI, and should be marked *b* if taken about six hours less than the HWI marked *a*.

Particular localities.—The tides at Willets Point, N. Y. (see Figs. 9–19), have a comparatively long stand, somewhat resembling the tides at Havre. The alternate low waters (more definitely the "lower lows") approach at times to the condition of double tides or aggers, § 15.

The tide at Sandy Hook, N. J., is "regular;" that is, comparatively free from shallow water components. This curve is characteristic of the tides at ocean stations along the Atlantic coast of the United States. All along this coast the phase and diurnal inequalities in height are small in comparison with the range of tide. The changes in mean sea level which happen during the fortnight shown are not tidal, but meteorological.

At Philadelphia, Pa.,† the stand is short. The duration of fall is much longer than the duration of rise. In fact, there is a tendency toward a bore. This tendency is carried much further at Rambler Island and Volcano Island, as is shown by Fig. 19.

At Galveston, Tex., the tide is almost wholly diurnal. When the moon is north of the equator the tides follow one transit, and when south, the other. When she is upon the equator the tides nearly disappear.

At Mazatlan, Mexico, the tide has large phase and diurnal inequalities in height. The former causes the semidaily range of tide to disappear at times (near neap tides), and the lunitidal intervals to suddenly change in value. This feature is found in the tides at Port Adelaide, Australia, where it is locally termed the "dodging tide."

At Port Townsend, Wash., the diurnal wave is large whenever the declination of the moon is considerable. Its phase with respect to the semidiurnal is then such that nearly all of the diurnal height inequality occurs in the low waters, and so nearly all of the diurnal time inequality occurs in the high waters. Here the sequence of tides is uncertain even at the times of extreme declination.

At St. Michael, Alaska, the tide is essentially diurnal.

---

*Ferrel's diagram of the Boston tides, Tidal Researches, Fig. 2, has the interval of the diurnal wave wrong by a half lunar day.

†The shallow water component M_4 is here unusually large. M_4 causes most of the inequality between the duration of rise and fall.

WILLETS POINT, L.I., N.Y.

75th MERIDIAN TIME

FIG. 9

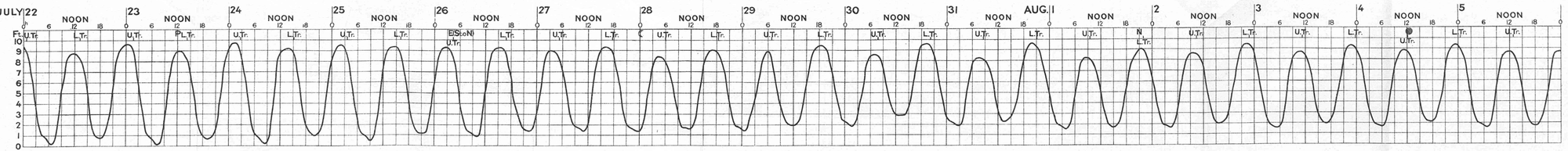

SANDY HOOK, N.J.

75th MERIDIAN TIME

FIG. 10

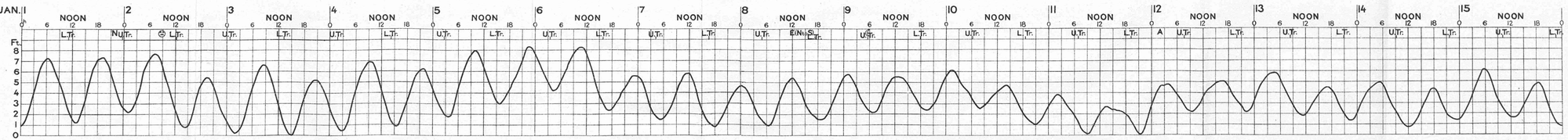

PHILADELPHIA, PA.

75th MERIDIAN TIME

FIG. 11

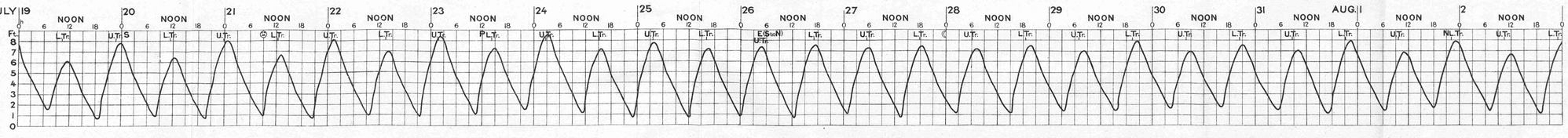

GALVESTON, TEXAS

LOCAL TIME

FIG. 12

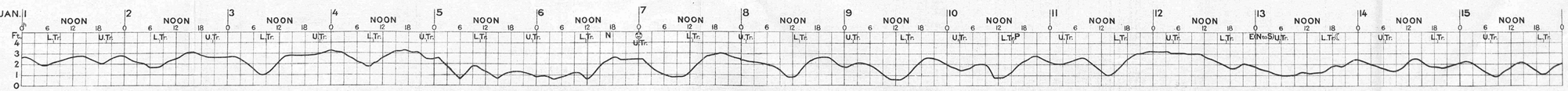

THE JUDD & DETWEILER INC., PRINTERS, WASHINGTON, D. C.

MAZATLAN, MEXICO

LOCAL TIME

FIG. 13

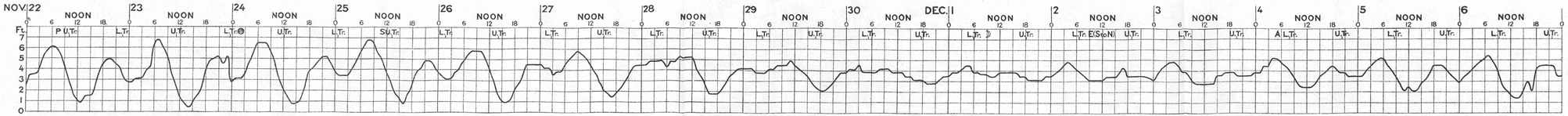

PORT TOWNSEND, WASH.

LOCAL TIME

FIG. 14

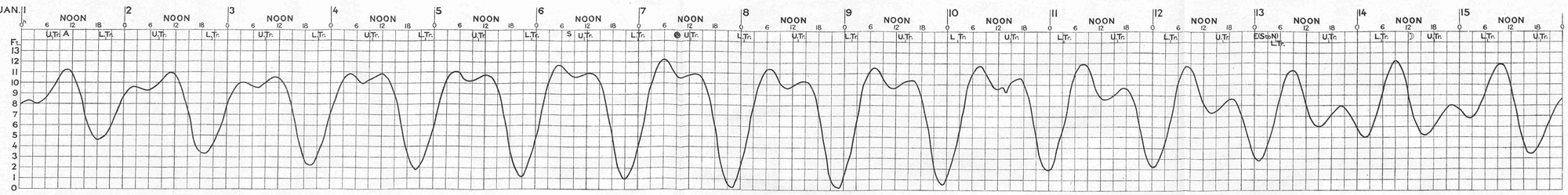

ST. MICHAEL, ALASKA

LOCAL TIME

FIG. 15

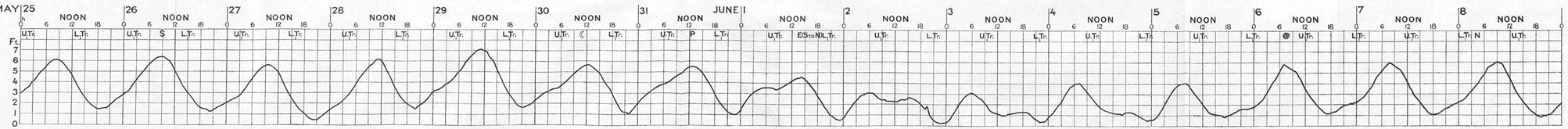

THE NORRIS PETERS CO., PHOTO-LITHO., WASHINGTON, D. C.

HONOLULU, H.I.

LOCAL TIME

FIG. 16

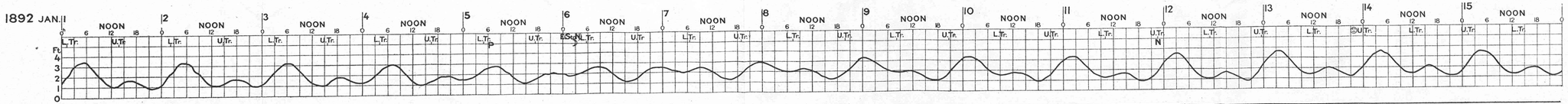

PAPEETE, TAHITI

LOCAL TIME

FIG. 17

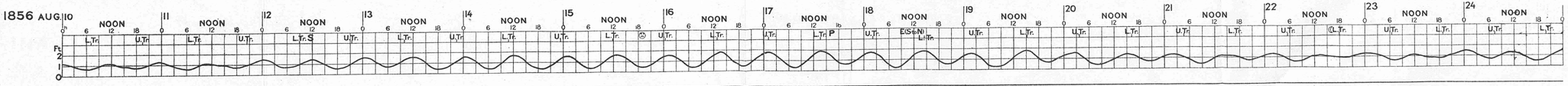

HAVRE, FRANCE

LOCAL TIME

FIG. 18

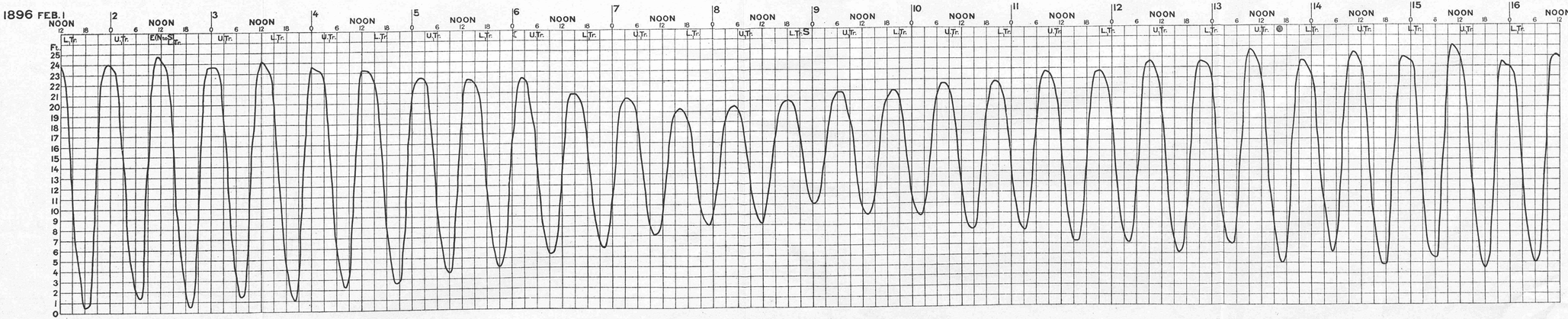

THE HORRIS PETERS CO., PHOTO-LITHO., WASHINGTON, D. C.

FIG. 19

HAINING, CHINA

LOCAL TIME

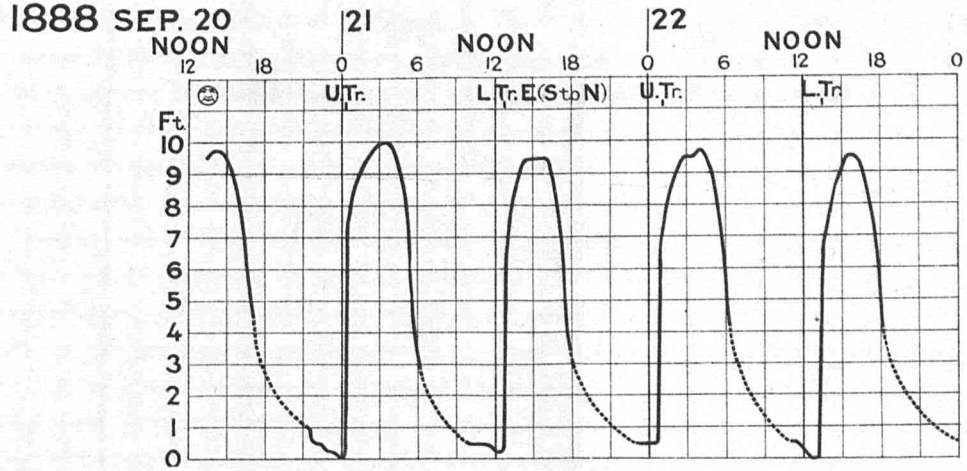

RAMBLER ISLAND, CHINA

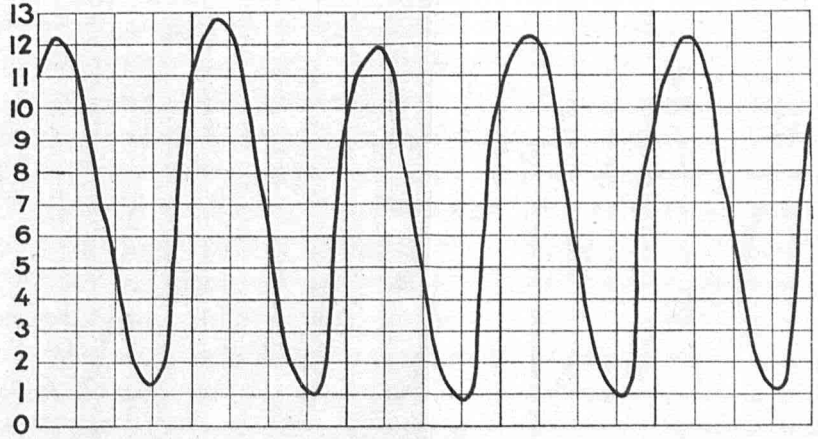

VOLCANO ISLAND, CHINA

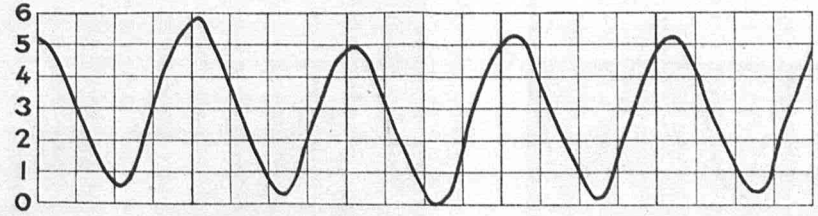

THE NORRIS PETERS CO., PHOTO-LITHO., WASHINGTON, D. C.

At Honolulu, Hawaiian Islands, the diurnal height inequality is nearly all in the high waters, instead of the low.

At Tahiti the tide is largely solar, so that the solitidal intervals are generally more nearly constant than the lunitidal intervals. (For a plotting of the solitidal intervals, see Fig. 13 of Ferrel's Tidal Researches.)

At Havre, France, the tides have a long stand and approach the double-headed form. The phase inequality is large in comparison with this inequality on our Atlantic coast.

Fig. 19 is obtained from observations published in a Report on the Bore of the Tsien-tang Kiang, by Commander Moore, R. N. Haining is at a point where the estuary suddenly narrows; Rambler Island and Volcano Islands are situated seaward about 28 and 75 statute miles, respectively.

CHAPTER V.

TIDAL WORK AND KNOWLEDGE BEFORE THE TIME OF NEWTON.

63. The maritime people of antiquity whose history has come down to us lived on or near the Mediterranean Sea, where the tide is generally small, and so they probably paid little attention to this periodic rising and falling of the waters. The numerous islands and straits, however, give rise to tidal races, and these in turn may be accompanied by whirlpools. The mythological Scylla and Charybdis, described by Homer,* were at a later period localized in the Straits of Messina, Scylla being a rock on the Italian shore, and Charybdis a whirlpool (now Galofaro) near the Sicilian shore.†

He places them near Trinacria (or Thrinacia), the three-cornered island of the sun, afterwards localized as Sicily.‡ The velocity of this race may be 6 miles per hour, while the range of the tide is but 1 foot. Homer says, "Under this§ divine Charybdis sucks in black water. For thrice in a day she sends it out, and thrice she sucks it in terribly." Strabo, probably without sufficient grounds, is inclined to attribute to Homer some knowledge of ordinary tides, and says, "The assertion of thrice, instead of twice, is either an error of the author or a blunder of the scribe."‖ Strabo subsequently makes another explanation, viz., that Circe says thrice instead of twice in order to exaggerate the perils which await Ulysses, and so to deter him from departing. Strabo adds, "However, this latter is a hyperbole which everyone makes use of; thus we say thrice-happy and thrice-miserable."¶ Gossellin remarks, "In the Euripus, which divides the Isle of Negropont from Bœotia, the waters are observed to flow in opposite directions several times a day. It was from this that Homer probably drew his ideas."** According to the explanation adopted, "thrice" may be either an intensitive or an indefinite term.

The much more formidable tidal currents in the fjords of Norway and among the islands around Scotland have undoubtedly played an important part in the mythology of the ancient inhabitants of these countries.††

While the myths of Scylla and Charybdis undoubtedly owe their origin to tidal movements, and while the large tides of the Red Sea may possibly help to explain the passage of the Israelites,‡‡ it seems probable that the deluge was due to some earthquake disturbance whereby a portion of lower Mesopotamia may have been submerged.§§

---

* Odyssey, Bk. XII, lines 73 et seq.

† Strabo, Geography (Hamilton and Falconer's translation, Bohn's library): Bk. I, Ch. II, § 16; Bk. VI, Ch. II, § 3. Mediterranean Pilot, Vol. I (1894), pp. 406–408.

Berghaus, Physikalischer Atlas (1892), No. 24.

At this point the Mediterranean Sea is divided into two parts, eastern and western. Each part has a tide of its own, and so the water at the two ends of the strait is not upon the same level. See § 40.

‡ Geog., Bk. VI, Ch. II, § 1.

§ I. e., wild fig-tree. Odyssey, Bk. XII, lines 104–106.

‖ Geog., Bk. I, Ch. I, § 7.

¶ Geog., Bk. I, Ch. II, § 36.

** Geog., Bk. I, Ch. I, § 7, footnote; Cf. ibid., Bk. I, Ch. II, § 30. See under Aristotle.

†† For some information along this line, see Enc. Brit., article "Whirlpool." See also this manual under Hakluyt and Varenius.

‡‡ Exodus, Chs. XIV, XV. Scaliger, Exercitatio LII, and Varenius, Geographia Generalis, Vol. I, Ch. 14, do not take this view. Cf. Lalande, Astronomie, Vol. III, p. 649.

It seems that in this vicinity Napoleon came near repeating Pharaoh's experience. Harper's Magazine, Vol. IV (1852), pp. 310, 311.

§§ B. K. Emerson, "Geological myths," Science, Vol. IV (1896), pp. 328 et seq.

64. *Herodotus* (484–428 B. C.) says, referring to a certain bay or arm of the Red Sea, "And in it an ebb and flow takes place daily."*

This is the only mention he makes of tides proper, and he says nothing concerning their origin. He thus describes the annual overflow of the Nile:

Respecting the nature of this river, I was unable to gain any information, either from the priests or anyone else. I was very desirous, however, of learning from them why the Nile, beginning at the summer solstice, fills and overflows for a hundred days; and when it has nearly completed this number of days, falls short in its stream, and retires; so that it continues low all the winter, until the return of the summer solstice.†

Herodotus then gives several opinions which had been advanced by others to explain this characteristic of the Nile, and follows these by an explanation of his own, which amounts to attributing the low stages during the winter season to evaporation caused by the sun then being over upper Libya.

Although *Plato* (429–348 B. C.), in common with most of the Greek philosophers, believed the earth an animal, he does not attribute the rising and falling of waters to its breathing, but rather to oscillations of the fluid within the earth.

Fournier, in his Hydrographie (1643), does not regard this latter hypothesis as altogether untenable.

Aristotle (384–322 B. C.) seems to have been aware of the existence of tides in certain places; but he probably paid little attention to them, notwithstanding the allegement that his death was indirectly due to the study of their cause.‡

The following extract is taken from the fourth chapter of his letter entitled "On the universe," addressed to Alexander, and which, although usually regarded as spurious, may nevertheless embody the ideas of Aristotle. Other than this, his writings refer to the tides but twice. He states that great tides are found in northern Europe, and that they are greater in a large sea than in a small one.§

The periodicity of the tide and its connection with the moon's motion are alluded to, but only as if by hearsay. Submersions of the coast and waves due to earthquakes would, naturally enough, have been better known to him.

Things analogous to these‖ are found in the sea also; for, oftentimes chasms in the water are formed by the receding waves, and the incoming waves advance, sometimes again retreating and sometimes only rushing straight forward as seems to have happened to Helice and Bura.¶ Oftentimes also fiery eruptions exist in the sea, fountains gush out, mouths of rivers are opened, trees spring up, deluges and whirlpools arise, corresponding to those which often accompany the wind; some in the middle of the deep sea, others in straits and bays. It is even said that many ebbings and risings of the sea always come around with the moon and upon certain fixed times. In a word, since the elements are mutually intermixed with one another, there appear, likewise in the air, the earth and the sea, analogous affinities which either may create and destroy certain properties [of each substance] or may preserve them in an unaltered state.

In speaking of northern Portugal, Strabo says:

The eastern part is mountainous and rugged, while the country beyond, as far as the sea, consists entirely of plains, with the exception of a few inconsiderable mountains. On this account Posidonious remarks that Aristotle was not correct in supposing that the ebb and flow of the tide was occasioned by the sea-coast of Iberia and Maurusia. For Aristotle asserted that the tides of the sea were caused by the extremities of the land being mountainous and rugged, and therefore both receiving the wave violently and also casting it back. Whereas Posidonius truly remarks that they are for the most part low and sandy.**

For two other views attributed to Aristotle, see under Plutarch and under Galileo.

65. When the army of *Alexander* approached the mouth of the Indus in their southward

---

* Herodotus (Cary's translation, Bohn's library), Bk. II, Ch. 11.

† Ibid., Bk. II, Ch. 19. The maximum height of the river occurs near the autumnal equinox.

‡ Lalande, Astronomie, Vol. III, p. 650, and Vol. IV, pp. 3–5. See also under Galileo. For accounts of the tides of the Euripus, see Lalande, Astronomie, Vol. IV, pp. 148–151; F. J. P. Babin, Phil. Trans., 1671, Abr. Vol. I, p. 592. A more recent account is given in Nature, Vol. 21 (1879), p. 186. According to this, the currents are due in part to the seiches in the Gulf of Talanta. In fact, near the moon's quadratures they control the currents, causing many reversals each day.

§ See under Varenius and Pliny.

‖ I. e., whirlwinds, etc.

¶ Towns of Greece submerged by an earthquake sea wave.

** Geography, Bk. III, Ch. III, § 3.

journey (325 B. C.), they were amazed at the tides, having never noticed any similar phenomenon in the Mediterranean Sea. Curtius (fl. c. 50 A. D.) narrates their experience on this occasion in his History of the Life and Reign of Alexander.*

On the third day the insinuations of the sea were perceptible in the river, blending their unequal waves by a gentle influx. †

To a second island, seated in the middle of the river, the navigators were then borne somewhat more slowly, because the stream was counteracted by the tide. They moor their vessels, and separate in parties to forage, without a presentiment of the disaster which overtakes mariners locally uninstructed.

About the third hour,‡ the ocean, according to a regular alternation, began to flow in furiously, driving back the river. The river—at first, arrested; then, impressed with a new force—rushed upward with more impetuosity than torrents descend a precipitous channel. The mass on board, unacquainted with the nature of the tide, saw only prodigies and symbols of the wrath of the gods. Ever and anon, the sea swelled; and, on plains recently dry, descended a diffused flood. The vessels lifted from their stations, and the whole fleet dispersed,—those who had debarked, in terror and astonishment at the calamity, ran from all quarters toward the ships. But tumultuous hurry is slow. These, with boat hooks, are hauling up their gallies: these, while fixing their seats, prevent the oars from being paired: some, hastening to sail, without waiting for the complement of mariners, impel languid hulls, unmanageable, crippled in the wings of navigation: other transports could not hold those who inconsiderately pressed into them: deficient, or redundant, numbers equally obstructed the impatient. Here was clamored, "Wait:"—here, "Row off." Dissonant voices, circulating inconsistent orders, prevented the multitude from acting by their own observation, or from hearing the general command. Nor availed the pilots; whose directions were either undistinguished in the tumult, or disobeyed by terrified and promiscuous crews.

Vessels dash together; and oars are by turns snatched away, to impel other gallies. A spectator would not imagine a fleet carrying the same army, but hostile navies commencing a battle. Prows strike against sterns: on the invading vessels, others drive aft. The fury of altercation carried the mariners to blows.

Now the tide had inundated all the fields skirting the river, only tops of knolls extant like little islands: to these, from the evacuated ships, the majority swam in consternation.

The dispersed fleet was, partly, riding in deep water, where the land was depressed into dells; and, partly, resting on shoals, where the flood had covered elevated ground.. Suddenly breaks on the Macedonians a new alarm, more vivid than the former. The sea began to ebb; the deluge with a violent drain, to retreat into the frith, disclosing tracts just before deeply buried. Unbuoyed, the ships pitched, some upon their prows, some upon their sides. The fields were strewed with baggage, arms, loose planks, and fragments of oars. The soldiers, neither daring to descend to the ground, nor reconciling themselves to stay in the transports, awaited what calamities could follow heavier than the present. They scarcely believed what they suffered, and witnessed—shipwrecks on dry land, the sea in a river. Nor yet ended their unhappiness; for, ignorant that the speedy return of the tide would set their ships afloat, they predicted to themselves famine and death. Terrifying monsters, too, left by the waves, were vagrantly gliding around.§

Now night approached; and the desperate circumstances touched the king with concern: but no anxieties could overwhelm his invincible courage. All night, he superintended the watches: he sent forward horsemen to the mouth of the river, to bring intelligence when the access of the tide commenced. Meanwhile, he ordered the shattered ships to be refitted, the overset to be propped up; and the mariners to be prepared, and attentive, against the flux of the tide.

The night consumed in vigilance and exhortations, the horsemen are descried, flying back in full career, followed by the tide. By a gradual diffusion, the inundation began to raise the ships; presently, flooding all the fields, it set the fleet in motion. Along the banks, resounded from the soldiers and mariners shouts of boundless joy, celebrating an unhoped deliverance. "Whence reissued suddenly so great a sea? Whither the day before had it retreated? What were the nature of the element, elsewhere refusing and here acknowledging periodical laws?" with wonder they inquired.

From what had happened, the king conjectured the appointed time of the flux to be just after sunrise. To anticipate the tide, he, at midnight, descended the river with a few vessels; and, passing its mouth, advanced four hundred stadia into the sea. A favorite object accomplished, he sacrificed to Neptune and the local deities, and returned to the fleet.

66. *Seleucus*, a mathematician of Babylonia (365–283 B. C.), admitted the rotary movement of the earth, but thought the moon moved in the opposite direction. By this means, he thought, waves happening between the earth's center and the moon become accumulated and so form the tide; or that the tide results from winds set up by these opposing motions.‖ According to Posidonius,¶ Seleucus connected the irregular tides of the Persian Gulf with the moon and its various declinations. He observed tides from Phœnicia to the Atlantic coast of Spain.

Pytheas, of Massilia (fl. c. 325 B. C.), having navigated the ocean from the Strait of Gibraltar to the British Isles, and possibly to Iceland,** was one of the first to note the connection between

* Bk. IX, Ch. IX. Translated by Pratt.

† About 60 or 65 miles from the sea.

‡ About 9 o'clock a. m.

§ "Probably, for the most part, aquatic serpents."

‖ See under Plutarch.

¶ See under Strabo.

** Cf. Strabo, Geog., Bk. IV, Ch. V, § 5.

the tides and moon; and was, so far as known, the first person to point out the connection between the half-monthly variation in the tide and the phases of the moon. He is said to be the first to measure the heights of the tide. Plutarch (q. v.) in referring to Pytheas, seems to have the erroneous notion that high water occurs at full moon and low water at new moon. One of Aristotle's remarks, however, would seem to indicate that somebody had brought him (Aristotle) accounts of tides which had been referred to the moon. Pytheas wrote a work on matters pertaining to the ocean which has not come down to us.

Eratosthenes (276— B. C.), according to Strabo (q. v.), believed the tidal currents of the Mediterranean due to a difference in level at neighboring points.

Posidonius, the Stoic philosopher (c. 130-50 B. C.), continued the history of Polybius. Only fragments of his work exist. According to Strabo (q. v.) he was the author of a Treatise on the Ocean, and an authority on tidal knowledge. He is said to have tried to calculate the influence of the moon upon the tides.

67. *Strabo* (c. 54 B. C.—c. 24 A. D.).

Strabo believes that the uniformity and the considerable size of the ocean tides go to prove that all land is surrounded by the ocean. He says:

> Those who have returned from an attempt to circumnavigate the earth, do not say they have been prevented from continuing their voyage by any opposing continent, for the sea remained perfectly open, but through want of resolution, and the scarcity of provision. This theory too accords better with the ebb and flow of the ocean, for the phenomenon, both in the increase and diminution, is every where identical, or at all events has but little difference, as if produced by the agitation of one sea, and resulting from one cause.
>
> We must not credit Hipparchus, who combats this opinion, denying that the ocean is every where similarly affected; or that even if it were, it would not follow that the Atlantic flowed in a circle, and thus continually returned into itself. Seleucus, the Babylonian, is his authority for this assertion. For a further investigation of the ocean and its tides we refer to Posidonius and Athenodorus, who have fully discussed this subject: we will now only remark that this view agrees better with the uniformity of the phenomenon; and that the greater the amount of moisture surrounding the earth, the easier would the heavenly bodies be supplied with vapours from thence.*

Strabo's ideas concerning the figure and position of the earth, the force of gravity, and the nature of sea level may be seen from the following quotations:

> We shall also assume that the earth is spheroidal, that its surface is likewise spheroidal, and above all, that bodies have a tendency towards its centre, which latter point is clear to the perception of the most average understanding. However we may show summarily that the earth is spheroidal, from the consideration that all things however distant tend to its centre, and that every body is attracted towards its centre of gravity; this is more distinctly proved from observations of the sea and sky, for here the evidence of the senses, and common observation, is alone requisite. The convexity of the sea is a further proof of this to those who have sailed; for they cannot perceive lights at a distance when placed at the same level as their eyes, but if raised on high, they at once become perceptible to vision, though at the same time further removed. So, when the eye is raised, it sees what before was utterly imperceptible.
>
> Homer speaks of this when he says, "Lifted up on the vast wave he quickly beheld afar."
>
> Sailors, as they approach their destination, behold the shore continually raising itself to their view; and objects which had at first seemed low, begin to elevate themselves. Our gnomons, also, are, among other things, evidence of the revolution of the heavenly bodies; and common sense at once shows us, that if the depth of the earth were infinite, such a revolution could not take place.†
>
> However, so nice a fellow is Eratosthenes, that though he professes himself a mathematician, he rejects entirely the dictum of Archimedes, who, in his work "On Bodies in Suspension," says that all liquids when left at rest assume a spherical form, having a center of gravity similar to that of the earth. A dictum which is acknowledged by all who have the slightest pretensions to mathematical sagacity. He says that the Mediterranean, which, according to his own description, is one entire sea, has not the same level even at points quite close to each other; and offers us the authority of engineers for this piece of folly, notwithstanding the affirmation of mathematicians that engineering is itself only one division of the mathematics. He tells us that Demetrius intended to cut through the Isthmus of Corinth, to open a passage for his fleet, but was prevented by his engineers, who, having taken measurements, reported that the level of the sea at the Gulf of Corinth was higher than at Cenchrea, so that if he cut through the isthmus, not only the coasts near Ægina, but even Ægina itself, with the neighbouring islands, would be laid completely under water, while the passage would prove of little value. According to Eratosthenes, it is this which occasions the current in straits, especially the current in the Strait of Sicily, where effects similar to the flow and ebb of the tide are remarked. The current there changes twice in the course of a day and night, like as in that period the tides of the sea flow and ebb twice. In the Tyrrhenian sea the current which is called

*Strabo, Geography (Hamilton and Falconer's translation, Bohn's Library), Bk. I, Ch. I, §§ 8, 9.

†Geog., Bk. I, Ch. I, § 20.

descendent, and which runs towards the sea of Sicily, as if it followed an inclined plane, corresponds to the flow of the tide in the ocean. We may remark, that this current corresponds to the flow both in the time of its commencement and cessation. For it commences at the rising and setting of the moon, and recedes when that satellite attains its meridian, whether above [in the zenith] or below the earth [in the nadir]. In the same way occurs the opposite or ascending current, as it is called. It corresponds to the ebb of the ocean, and commences as soon as the moon has reached either zenith or nadir, and ceases the moment she reaches the point of her rising or setting. [So far Eratosthenes.]

The nature of the ebb and flow has been sufficiently treated of by Posidonius and Athenodorus. Concerning the flux and reflux of the currents, which also may be explained by physics, it will suffice our present purpose to observe, that in the various straits these do not resemble each other, but each strait has its own peculiar current. Were they to resemble each other, the current at the Strait of Sicily would not change merely twice during the day, (as Eratosthenes himself tells us it does,) and at Chalcis seven times; nor again that of Constantinople, which does not change at all, but runs always in one direction from the Euxine to the Propontis, and, as Hipparchus tells us, sometimes ceases altogether. However, if they did all depend on one cause, it would not be that which Eratosthenes has assigned, namely, that the various seas have different levels. The kind of inequality he supposes would not even be found in rivers only for the cataracts; and where these cataracts occur, they occasion no ebbing, but have one continued downward flow, which is caused by the inclination both of the flow and the surface; and therefore though they have no flux or reflux they do not remain still, on account of a principle of flowing which is inherent in them; at the same time they cannot be on the same level, but one must be higher and one lower than another. But who ever imagined the surface of the ocean to be on a slope, especially those who follow a system which supposes the four bodies we call elementary, to be spherical. For water is not like the earth, which being of a solid nature is capable of permanent depressions and risings, but by its force of gravity spreads equally over the earth, and assumes that kind of level which Archimedes has assigned it.*

Here are a few of the facts established by natural philosophers:

The earth and heavens are spheroidal.

The tendency of all bodies having weight, is to a centre.

Further, the earth being spheroidal, and having the same centre as the heavens, is motionless, as well as the axis which passes through both it and the heavens. The heavens turn round both the earth and its axis, from east to west. The fixed stars turn round with it, at the same rate as the whole. These fixed stars follow in their course parallel circles; the principal of which are, the equator, the two tropics, and the arctic circles. While the planets, the sun, and the moon, describe certain oblique circles comprehended within the zodiac.†

Elsewhere Strabo states that if we go west sufficiently far we shall reach India, unless some continent intervenes; and he suggests that there may be one or more such bodies of land on the parallel of Spain.‡ He ascribes the great heat felt in the torrid zone to the perpendicularity of the sun's rays, and not to the sun's proximity. He says that all parts of the earth are equally remote from the sun, since, in comparison with this body, the earth is but a point.§

The following quotations show that Strabo clearly discriminated between "tidal waves" and ordinary or true tides. He considers "tidal waves" to be due to disturbances in the bottom of the sea.

But the risings of rivers are not violent and sudden, nor do the tides continue any length of time, nor occur irregularly; nor yet along the coasts of our sea do they cause inundations, nor any where else. Consequently we must seek for an explanation of the cause‖ either in the stratum composing the bed of the sea, or in that which is overflowed; we prefer to look for it in the former, since by reason of its humidity it is more liable to shiftings and sudden changes of position, and we shall find that in these matters the wind is the great agent after all. But, I repeat it, the immediate cause of these phenomena, is not in the fact of one part of the bed of the ocean being higher or lower than another, but in the upheaving or depression of the strata on which the waters rest.¶

It is likewise evidently a fiction, that there ever occurred an overwhelming flood-tide, for the ocean, in the influences of this kind which it experiences, receives a certain settled and periodical increase and decrease.**

He does not, however, state what he regards as the physical cause of the tides, although he has already hinted at vapors surrounding the heavenly bodies. He merely, after Athenodorus *likens* the phenomenon to the breathing of a living creature, as do the poets of to-day.††

For after the manner of living creatures, which go on inhaling and exhaling their breath continually, so the sea in a like way keeps up a constant motion in and out of itself.

---

* Geog., Bk. I, Ch. III, §§ 11, 12.
† Geog., Bk. II, Ch. V, § 2.
‡ Geog., Bk. I, Ch. IV, § 6.
§ Geog., Bk. XV, Ch. I, § 24.
‖ Of inundations.
¶ Geog., Bk. I, Ch. III, § 5.
** Geog., Bk. VII, Ch. II, § 1.
†† Geog, Bk. I, Ch. III, § 8; Bk. III, Ch. V, § 7.

He describes the tides around Spain and Portugal,* the Persian Gulf,† England,‡ Italy,§ and Denmark.‖

The following account of the tides at Cadiz describes the phase inequality and properly connects it with the age of the moon, but the description of a supposed annual increase (in range) has been doubtless based upon insufficient observations:

Now he¶ asserts that the motion of the sea corresponds with the revolution of the heavenly bodies, and experiences a diurnal, monthly, and annual change, in strict accordance with the changes of the moon. For [he continues] when the moon is elevated one sign of the zodiac above the horizon, the sea begins sensibly to swell and cover the shores, until she has attained her meridian; but when that satellite begins to decline, the sea again retires by degrees, until the moon wants merely one sign of the zodiac from setting; it then remains stationary until the moon has set, and also descended one sign of the zodiac below the horizon, when it again rises until she has attained her meridian below the earth; it then retires again until the moon is within one sign of the zodiac of her rising above the horizon, when it remains stationary until the moon has risen one sign of the zodiac above the earth, and then begins to rise as before. Such he describes to be the diurnal revolution.** In respect to the monthly revolution, [he says] that the spring-tides occur at the time of the new moon, when they decrease until the first quarter; they then increase until full moon, when they again decrease until the last quarter, after which they increase till the new moon; [he adds] that these increases ought to be understood both of their duration and speed. In regard to the annual revolution, he says that he learned from the statements of the Gaditanians, that both the ebb and flow tides were at their extremes at the summer solstice: and that hence he conjectured that they decreased until the [autumnal] equinox; then increased till the winter solstice; then decreased again until the vernal equinox; and [finally] increased until the summer solstice.††

The following quotation refers to a condition of flood-tide resembling a bore:

For in the navigation of the rivers,‡‡ the sailors run considerable danger both in ascending and descending, owing to the violence with which the flood-tide encounters the current of the stream as it flows down. The ebb-tides are likewise the cause of much damage in these estuaries, for resulting as they do from the same cause as the flood-tides, they are frequently so rapid as to leave the vessel on dry land; and herds in passing over to the islands that are in these estuaries are sometimes drowned [in the passage] and sometimes surprised in the islands, and endeavouring to cross back again to the continent, are unable, and perish in the attempt.§§

Strabo is the first writer who gives, although incredulously and upon the authority of others, some account of the tropic tides and the diurnal inequality:‖‖

Posidonius tells us that Seleucus, a native of the country next the Erythræan Sea, states that the regularity and irregularity of the ebb and flow of the sea follow the different positions of the moon in the zodiac; that when she is in the equinoctial signs the tides are regular, but that when she is in the signs next the tropics, the tides are irregular both in their height and force; and that for the remaining signs the irregularity is greater or less, according as they are more or less removed from the signs before mentioned. Posidonius adds, that during the summer solstice and whilst the moon was full, he himself passed many days in the temple of Hercules at Gades, but could not observe any thing of these annual irregularities.¶¶

In reference to the annual inequality in water level, it may be of interest to here quote from Strabo some passages concerning the periodic stages of the Nile and the rivers of India:

Of this kind are the rising of the Nile, and the alluvial deposition at its mouth. There is nothing in the whole country to which travellers in Egypt so immediately direct their inquiries, as the character of the Nile; nor do the inhabitants possess any thing else equally wonderful and curious, of which to inform foreigners; for in fact, to give them a description of the river, is to lay open to their view every main characteristic of the country. It is the question put before every other by those who have never seen Egypt themselves.***

---

*Geog., Bk. III, Ch. II, §§ 4, 5, 7; Ch. III, § 1; Ch. V, §§ 7, 8.

†Geog., Bk. III, Ch. V, § 9; Bk. XVI, Ch. III, § 6.

‡Geog., Bk. IV, Ch. V, § 3.

§Geog., Bk. V, Ch. I, §§ 5, 7; Bk. VI, Ch. II, §§ 3, 11.

‖Geog., Bk. VII, Ch. II, § 1.

¶Posidonius.

**HWI = $1^h\,45^m$, LWI = $7^h\,58^m$, Mn = 8·7 feet, at Cadiz.

††Geog., Bk. III, Ch. V. § 8.

‡‡Rivers between the Strait of Gibraltar and Cape St. Vincent.

§§Geog., Bk., III, Ch. II, § 4.

‖‖For the Persian Gulf at Bushire, lat. 29° 00′, long. 50° 52′, $M_2 = 0^{ft}\cdot90$, $S_2 = 0^{ft}\cdot31$, $K_1 = 0^{ft}\cdot86$, $O_1 = 0^{ft}\cdot60$, $M_2^{\circ} = 210^{\circ}\cdot5$, $S_2^{\circ} = 262^{\circ}$, $K_1^{\circ} = 285^{\circ}$, $O_1^{\circ} = 253^{\circ}$, according to Report of Indian Survey, 1893-4, p. XLII; ∴ Mn = $2^{ft}\cdot10$, Gc = $3^{ft}\cdot80$, HWQ = $2^{ft}\cdot83$, LWQ = $0^{ft}\cdot72$.

¶¶Geog., Bk. III, Ch. V, § 9.

***Geog., Bk. I, Ch. II, § 29.

Nearchus says, that the old question respecting the rise of the Nile is answered by the case of the Indian rivers, namely, that it is the effect of summer rains.*

For the Euphrates, at the commencement of summer, overflows. It begins to fill in the spring, when the snow in Armenia melts.†

The ancients understood more by conjecture than otherwise, but persons in later times learnt by experience as eye-witnesses, that the Nile owes its rise to summer rains, which fall in great abundance in Upper Ethiopia, particularly in the most distant mountains. On the rains ceasing, the fulness of the river gradually subsides.‡

Elephantina is an island in the Nile, at the distance of half a stadium in front of Syene; in this island is a city with a temple of Cnuphis, and a nilometer like that at Memphis. The nilometer is a well upon the banks of the Nile, constructed of close-fitting stones, on which are marked the greatest, least, and mean risings of the Nile; for the water in the well and in the river rises and subsides simultaneously. Upon the wall of the well are lines, which indicate the complete rise of the river, and other degrees of its rising. Those who examine these marks communicate the result to the public for their information. For it is known long before, by these marks, and by the time elapsed from the commencement, what the future rise of the river will be, and notice is given of it. This information is of service to the husbandmen with reference to the distribution of the water; for the purpose also of attending to the embankments, canals, and other things of this kind. It is of use also to the governors, who fix the revenue; for the greater the rise of the river, the greater it is expected will be the revenue.§

This passage is of interest in reference to tide gauges and tidal prediction.

68. *Plutarch* (fl. 50–100 A. D.) gives the theories of several philosophers concerning the cause of the tides, but his remarks on Pytheas show his unfamiliarity with the phenomenon. He says:

Aristotle and Heraclides say, they proceed from the sun, which moves and whirls about the winds; and these falling with a violence upon the Atlantic, it is pressed and swells by them, by which means the sea flows; and their impression ceasing, the sea retracts, hence they ebb. Pytheas the Massilian, that the fulness of the moon gives the the flow, the wane the ebb. Plato attributes it all to a certain oscillation of the sea, which by means of a mouth or orifice causes the alternate ebb and flow; and by this means the seas do rise and flow contrarily. Timæus believes that those rivers which fall from the mountains of the Celtic Gaul into the Atlantic produce a tide. For upon their entering upon that sea, they violently press upon it, and so cause the flow; but they disemboguing themselves, there is a cessation of the impetuousness, by which means the ebb is produced.‖ Seleucus the mathematician attributes a motion to the earth; and thus he pronounceth that the moon in its circumlation meets and repels the earth in its motion; between these two, the earth and the moon, there is a vehement wind raised and intercepted, which rushes upon the Atlantic Ocean, and gives us a probable argument that it is the cause the sea is troubled and moved.¶

While Plutarch states that most philosophers have regarded the earth as an animal, he says nothing about ascribing the tides to its respiration or to its alternate drinking in and spouting out a certain portion of the water. Such notions were entertained by the Stoics Solinus, Apollonius of Tyana, and others. (See under Pomponius Mela and under Kepler, §§ 70, 77.)

It cannot be said that the Greeks, as a rule, had occasion to become familiar with tidal phenomena on any impressive scale. But the Romans, toward and after the time of Cæsar, had frequently to contend with those enormous tides which visit the coasts of Portugal, France, and Great Britain.

69. *Pliny the Elder* (23–79 A. D.).

Pliny describes, in the following extract taken from his Natural History,** the principal phenomena of the tides. It will be seen that he is aware of a nearly constant lunitidal interval for a given place; of the phase inequality; of the retard, or age, of this inequality; of the fact that higher tides occur near the equinoxes than near the solstices; and of the fact that the tides on the outer coast rise higher than those along the shores of the Mediterranean.

Much has been said about the nature of waters; but the most wonderful circumstance is the alternate flowing and ebbing of the tides, which exists, indeed, under various forms, but is caused by the sun and the moon. The tide flows twice and ebbs twice between each two risings of the moon, always in the space of twenty-four hours.

---

* Geog., Bk. XV, Ch. I, § 25.

† Geog., Bk. XVI, Ch. I, § 9.

‡ Geog., Bk. XVII, Ch. I, § 5. In the Philosophical Transactions for 1666 is a review of a French book by de la Chambre, in which he claims that the overflow of the Nile is not due to the rain, but to the niter contained in its muddy banks. This being heated by the sun ferments and mingling with the waters swells the river, causing it to overflow its banks. In the same volume there is given a review of Isaac Vossius' "De Nili et Aliorum Fluminum Origine."

§ Geog., Bk. XVII, Ch. I, § 48. Cf. Lockyer, The Dawn of Astronomy, Ch. XXIII; "The Egyptian Year and the Nile."

‖ This idea was revived in the seventeenth century by Scipio Claramontius and refuted by Riccioli.

¶ "Of Those Sentiments Concerning Nature with which Philosophers were Delighted" (Morales, Goodwin's translation, Vol. III) Bk. III, Ch. XVII.

** Historia Naturalis (Bostock and Riley's translation), Book II, chapters 99 (97)–102 (99). A. D. 77.

First, the moon rising with the stars swells out the tide, and after some time, having gained the summit of the heavens, she declines from the meridian and sets, and the tide subsides. Again, after she has set, and moves in the heavens under the earth, as she approaches the meridian on the opposite side, the tide flows in; after which it recedes until she again rises to us. But the tide of the next day is never at the same time with that of the preceding; as if the planet was in attendance, greedily drinking up the sea, and continually rising in a different place from what she did the day before. The intervals are, however, equal, being always of six hours; not indeed in respect of any particular day or night or place, but equinoctial hours,* and therefore they are unequal as estimated by the length of common hours, since a greater number of them fall on some certain days or nights, and they are never equal everywhere except at the equinox. This is a great, most clear, and even divine proof of the dullness of those, who deny that the stars go below the earth and rise up again, and that nature presents the same face in the same states of their rising and setting; for the course of the stars is equally obvious in the one case as in the other, producing the same effect as when it is manifest to the sight.

There is a difference in the tides, depending on the moon, of a complicated nature, and, first, as to the period of seven days. For the tides are of moderate height from the new moon to the first quarter; from this time they increase, and are the highest at the full: they then decrease. On the seventh day they are equal to what they were at the first quarter, and they again increase from the time that she is at first quarter on the other side. At her conjunction with the sun they are equally high as at the full. When the moon is in the northern hemisphere, and recedes further from the earth, the tides are lower than when, going toward the south, she exercises her influence at a less distance. After an interval of eight years, and the hundredth revolution of the moon, the periods and the heights of the tides return into the same order as at first, this planet always acting upon them; and all these effects are likewise increased by the annual changes of the sun, the tides rising up higher at the equinoxes, and more so at the autumnal than at the vernal; while they are lower about the winter solstice, and still more so at the summer solstice; not indeed precisely at the points of time which I have mentioned, but a few days after; for example, not exactly at the full nor at the new moon, but after them; and not immediately when the moon becomes visible or invisible, or has advanced to the middle of her course, but generally about two hours later than the equinoctial hours; the effect of what is going on in the heavens being felt after a short interval; as we observe with respect to lightning, thunder, and thunderbolts.

But the tides of the ocean cover greater spaces and produce greater inundations than the tides of the other seas; whether it be that the whole of the universe taken together is more full of life than its individual parts, or that the large open space feels more sensibly the power of the planet, as it moves freely about, than when restrained within narrow bounds. On which account neither lakes nor rivers are moved in the same manner. Pytheas of Massilia informs us, that in Britain the tide rises 80 cubits. Inland seas are inclosed as in a harbor, but, in some parts of them, there is a more free space which obeys the influence. Among many other examples, the force of the tide will carry us in three days from Italy to Utica, when the sea is tranquil and there is no impulse from the sails. But these motions are more felt about the shores than in the deep parts of the seas, as in the body the extremities of the veins feel the pulse, which is the vital spirit, more than the other parts. And in most estuaries, on account of the unequal rising of the stars in each tract, the tides differ from each other, but this respects the period, not the nature of them; as is the case in the Syrtes.

There are, however, some tides which are of a peculiar nature, as in the Tauromenian Euripus, where the ebb and flow is more frequent than in other places, and in Euboea, where it takes place seven times during the day and the night. The tides intermit three times during each month, being the 7th, 8th, and 9th day of the moon. At Gades, which is very near the temple of Hercules, there is a spring inclosed like a well, which sometimes rises and falls with the ocean, and, at other times, in both respects contrary to it. In the same place there is another well, which always agrees with the ocean. On the shores of the Bætis, there is a town where the wells become lower when the tide rises, and fill again when it ebbs; while at other times they remain stationary. The same thing occurs in one well in the town of Hispalis, while there is nothing peculiar in the other wells. The Euxine always flows into the Propontis, the water never flowing back into the Euxine.

All seas are purified at the full moon; some also at stated periods. At Messina and Mylae a refuse matter, like dung, is cast up on the shore, whence originated the story of the oxen of the sun having had their stable at that place. To what has been said above (not to omit anything with which I am acquainted) Aristotle adds, that no animal dies except when the tide is ebbing. The observation has been often made on the ocean of Gaul; but it has only been found true with respect to man.

Hence we may certainly conjecture, that the moon is not unjustly regarded as the star of our life. This it is that replenishes the earth; when she approaches it, she fills all bodies, while, when she recedes, she empties them.† From this cause it is that shell-fish grow with her increase, and that those animals which are without blood more particularly experience her influence; also, that the blood of man is increased or diminished in proportion to the quantity of her light; also, that the leaves and vegetables generally, as I shall describe in the proper place, feel her influence, her power penetrating all things.

70. *Information about tides common to the Romans.*

That the rising and falling of the tide was common knowledge among the Romans may be readily seen by consulting Latin-English lexicons under such words as "æstus" and "tumesco."

* I. e., mean solar hours.

† The sympathy of the moon for moist bodies, etc., was a prevalent notion at the time of Varenius.

Virgil* (70–19 B. C.) and Horace† (65–8 B. C.) make some mention of the phenomenon; but Cicero‡ (106–43 B. C.), Lucan§ (39– – A. D.), and Claudianus‖ (fl. c. 400 A. D.) state or suggest that the times of the tide are governed by the moon's motion. Cæsar¶ (100–44 B. C.) and Macrobius** (fl. 400 A. D.) state how the spring tides are connected with the full moon. Seneca†† (3–65 A. D.) even states that the equinoctial tides when the moon and sun are in conjunction generally exceed in size all others. This is much more nearly true than Pliny's statement that tides rise higher at the equinoxes, for it is the *spring tides* which partake of this semiannual increase.‡‡

Pomponius Mela (fl. c., 50 A. D.) says that it is not known whether the tides are produced by the earth's breathing, by deep caverns, or by the moon.§§

71. *Early tide table for London Bridge.*—In the Philosophical Transactions for 1837, p. 103, Lubbock says:

I am much indebted to Mr. Yates for notice of a very ancient tide table which exists in a MS. in the British Museum. It is in the Codex Cottonianus, Julius DVII., which appears to have been written in the 13th century, and to have belonged to St. Albans Abbey. It contains calendar and other astronomical or geographical matters, some of which are the productions of John Wallingford, who died Abbot of St. Albans A. D. 1213. At p. 45b. is a table on one leaf, showing the time of high water at London Bridge, "flod at london brigge," thus:

Ætas Lunæ.	*h.*	*m.*
1	3	48
2	4	36
3	5	24
4	6	12
.....	.....	.....
.....	.....	.....
28	1	24
29	2	12
30	3	0

N. B. The numbers increase by a constant difference of forty-eight minutes. The first column gives the moon's age in days.

*Qua vi maria alta tumescant,
Objicibus ruptis, rursusque in se ipsa residant.—Georg., II, 479-480.

†Quæ mare compescant causæ. . . . —Epist., I, XII, 16.

‡Quid de fretis, aut de marinis æstibus plura dicam? quorum accessus et recessus lunæ motu gubernantur.—De Divinatione II, 34.

§An sidere mota secundo
Tethyos unda vagæ lunaribus æstuet horis:
Flammiger an Titan. . . . . —Pharsalia, I, 413-415.

‖Certis ubi legibus advena Nereus
Æstuat, et pronas pupes nunc amne secundo,
Nunc redeunte, vehit; nudataque littora fluctu
Deserit, Oceani lunaribus æmula damnis.—De VI. Cons. Honorii, 496-499.

¶Eadem nocte accidit, ut esset luna plena; qui dies maritimos æstus maximos in Oceano efficere consuevit.—B. G., IV, XXIX.

**Oceanus quoque in incremento suo hunc numerum tenet; nam primo nascentis lunæ die fit copiosor solito; minitur paulisper secundo; minoremque videt eum tertius, quam secundus: et ita decrescendo ad diem septimum pervenit. Rursus octavus dies manet septimo par; et nonus fit similis sexto . . . tertio quoque duodecimus; et tertius decimus fit similis secundo, quartus decimus primo. Tertia vero hebdomas eadem facit quæ prima; quarta eadem, quæ secundo.—Somnium Scipionis, I, 6.

††Ut solet æstus æquinoxialis, sub ipsum lunæ solisque coitum, omnibus aliis major undare.—Naturales Quæstiones, III, 28.

‡‡See "Table of phase effects," § 35; also under Bacon, Varenius, Wallis, and Childrey. Lalande, Astronomie, Vol. IV, pp. 83–113, examines the question of equinoctial spring tides, but many of his conclusions are erroneous. It would be interesting to know whether or not early notions concerning equinoctial tides were not obtained from real or supposed equinoctial storms or floods rather than from the tides proper. But Strabo states that unusually large tides occur at the solstices.

§§Neque adhuc satis cogitum est, anhelitune suo id mundus efficiat, retractamque cum spiritu regerat undam undique, si, (ut doctioribus placet) unum animal est: an sint depressi aliqui specus, quo reciprocata maria residant, atque unde se rursus exuberantia attollant: an luna causas tantis meatibus præbeat.—De Situ Orbis, III, L.

Most of the above Latin writers are quoted by Lalande, Astronomie, Vol. IV. See also Riccioli, Almagestum Novum, and Boscovich, "Dissertatio de maris æstu" (Rome, 1747). For some account of the tides in the Mediterranean, see Lalande, Astronomie, Vol. IV, pp. 119 et seq; also Alessandro Cialdi, "Cenni sul Moto Ondoso del Mare e sulle Correnti di Esso" (Rome, 1856), pp. 80 et seq.

Hence it would appear that high water at London on full and change was at that epoch $3^h\ 48^m$, or more than an hour later than at present. The time of high water at London on full and change is given in Mr. Riddle's *Navigation* and in other works $2^h\ 45^m$: Flamsteed made it 3^h.

At 0^h *ætas lunæ* this table gives 3^h as it also does at 30^d ($= \frac{24 \times 60}{48} =$ the assumed length of a synodical month in days). The present value at 0^d is about 2^h. It is to be noticed, however, that no regard is paid to the phase inequality in these tabular values, and that the age of the moon roughly determines the time of transit; and to this a constant lunitidal interval of 3^h has been applied. It appears from Flamsteed's remarks* that up to his time the rule involved in this old table was generally followed although some had calculated the time of transit more carefully.

Julius Cæsar Scaliger (1484–1558). *Exercitatio* LII,† entitled "De maris motu," is a general exposition of the tides, the views therein suggested, taken in connection with the time at which it was written, give to it considerable historic value.

Without professing to know the cause of the tides, Scaliger remarks that because the flow and ebb recur at definite and stated times, the moving cause must be definite in character.

His approach to the gravitational theory of tides appears in the following quotation:

For since [the tide] is observed to follow the course of the moon, they have judged it created by the moon. [You say] but the moon does not touch the waters. This has been a difficulty with some of the Peripatetics: likewise the magnet ought to give them difficulty. Because there is motion in the iron, although not in contact with the stone, wherefore may not the sea follow the body of the noblest orb? But it seems manifest. Surely there is a stillness of the sea at the times of the quadratures which is called a calm by the people. At the times of full moon the seas are rougher: so that they seem to restrain themselves with the desire of the moon. . . .

The tide then, in the usual sense of the word, is a duplex motion, and truly duplex: for in itself is a return. One part is in conformity with the motion of the *primum mobile*, the other is recurrent and contrary thereto: but both occur on definite times. For there are two motions just as in the contraction and expansion of the heart.

He speaks of the tides in the Arctic Ocean, around Great Britain, in the South Sea, the Adriatic Sea, the Red Sea, the Indus River, the Garonne River, the Euripus, and elsewhere; and tries to assign causes for their peculiarities.

He infers a declinational inequality in the tides because the moon changes her declination and so rises not always in the same place. He believes the long stretch of the Western Continent to explain the alternation of flow and ebb.

As with most of the early writers he finds difficulty in accounting for the ebb:

Wherefore does the sea ebb? Not only because of a dislike for the shores and a casting back, but also because it follows its loves, viz., the moon. It differs from the movement of the ocean.

Extracts from Hakluyt's Collection of the Early Voyages, Travels, and Discoveries of the English Nation.‡

72. A whirlpool on the Coast of Norway, called Malestrande.

Giraldus Cambrensis (who florished in the yeere 1210, vnder king Iohn) in his booke of the miracles of Ireland, hath certaine words altogether alike with these, videlicet:

Not farre from these Islands (namely the Hebrides, Island &c.) towards the North there is a certaine woonderful whirlpoole of the sea, whereinto all the waues of the sea from farre haue their course and recourse, as it were without stoppe: which, there conueying themselves into the secret receptacles of nature, are swallowed vp, as it were, into a bottomlesse pit, and if it chance that any shippe doe passe this way, it is pulled, and drawen with such a violence of the waves, that eftsoones without remedy, the force of the whirlepoole deuoureth the same.

The Philosophers describe foure indraughts of this Ocean sea, in the foure opposite quarters of the world, from whence many doe coniecture that as well the flowing of the sea, as the blasts of the winde, haue their first originall.§

. . . . . .

Instructions and notes very necessary and needfull to be obserued in the purposed voyage for discouery of Cathay Eastwards, by Arthur Pet, and Charles Iackman: given by M. William Burrough. 1580.

---

* Phil. Trans., 1682–3 [p. 12]; Abr. Vol. II, p. 555.

† Exotericarum Exercitationem ad Cardanum (Frankfort 1592; first published in 1557).

‡ London, 1809–12. A new edition; the original, London, 1599.

§ Vol. I. pp. 134–135.

And when you come vpon any coast where you find floods and ebs, doe you diligently note the time of the highest and lowest water in euery place, and the slake or still water of full sea, and lowe water, and also which way the flood doeth runne, how the tides doe set, how much water it hieth, and what force the tide hath to driue a ship in one houre, or in the whole tide, as neere as you can iudge it, and what difference in time you finde betweene the running of the flood, and the ebb. And if you finde upon any coast the currant to runne alwayes one way, doe you also note the same duely, how it setteth in euery place, and obserue what force it hath to driue a ship in one houre &c.*

This shows that the writer was aware of the fact that the duration of flood and ebb currents are not generally equal.

73. The voyage and trauell of M. Cæsar Fredericke, Marchant of Venice, into the East India, and beyond the Indies . . . . . translated out of Italian by M. Thomas Hickocke. [1563.]

From Martauan I departed to goe to the chiefest Citie in the kingdome of Pegu, which is also called after the name of the kingdome, which voyage is made by sea in three or foure daies; they may goe also by lande, but it is better for him that hath marchandize to goe by sea and lesser charge. And in this voyage you shall haue a Macareo, which is one of the most marueilous things in the world that Nature hath wrought, and I neuer saw any thing so hard to be beleeued as this, to wit, the great increasing & diminishing of the water there at one push or instant, and the horrible earthquake and great noyse that the said Macareo maketh where it commeth. We departed from Martauan in barkes, which are like to our Pylot boates, with the increase of the water, and they goe as swift as an arrow out of a bow, so long as the tide runneth with them, and when the water is at the highest, then they drawe themselues out of the Chanell towardes some banke, and there they come to anker, and when the water is diminished, then they rest on dry land: and when the barkes rest dry, they are as high from the bottome of the Chanell, as any house top is high from the ground. They let their barkes lie so high for this respect, that if there should any shippe rest or ride in the Chanell, with such force commeth in the water, that it would ouerthrowe shippe or barke: yet for all this, that the barkes be so farre out of the Chanell, and though the water hath lost her greatest strength and furie before it come so high, yet they make fast their prowe to the streme, and oftentimes it maketh them very fearefull, and if the anker did not holde her prow vp by strength, shee would be ouerthrowen and lost with men and goods. When the water beginneth to increase, it maketh such a noyse and so great that you would thinke it an earthquake, and presently at the first it maketh three waues. So that the first washeth ouer the barke, from stemme to sterne, the second is not so furious as the first, and the thirde rayseth the Anker, and then for the space of sixe houres while the water encreaseth, they rowe with such swiftnesse that you would thinke they did fly: in these tydes there must be lost no iot of time, for if you arriue not at the stagions before the tyde be spent, you must turne backe from whence you came. For there is no staying at any place, but at these stagions, and there is more danger at one of these places then at another, as they be higher and lower one then another. When as you returne from Pegu to Martauan, they goe but halfe the tide at a time, because they will lay their barkes vp aloft on the bankes, for the reason aforesayd. I could neuer gather any reason of the noyse that this water maketh in the increase of the tide, and in deminishing of the water. There is another Macareo in Cambaya, but that is nothing in comparison of this.†

74. Another testimonie of the voyage of Sebastian Cabot to the West and Northwest, taken out of the sixt Chapter of the third Decade of Peter Martyr of Angleria.

As hee traueiled by the coastes of this great land,‡ (which he named Baccalaos) he saith that hee found the like course of the waters toward the West, but the same to runne more softly and gently then the swift waters which the Spaniards found in their Nauigations Southwards. Wherefore it is not onely more like it to be true, but ought also of necessitie to be concluded that betweene both the lands hitherto vnknowen, there should be certaine great open places whereby the waters should thus continually passe from the East vnto the West: which waters I suppose to be driuen about the globe of the earth by the uncessant mouing and impulsions of the heauens, and not to bee swallowed vp and cast vp againe by the breathing of Demogorgon, as some haue imagined, because they see the seas by increase and decrease to ebbe and flowe.§

. . . . . .

To prove by authoritie a passage to be on the Northside of America, to goe to Cathaia, and the East India.

Also it appeareth to be an Island, insomuch as the Sea runneth by nature circularly from the East to the West, following the diurnal motion of Primum Mobile, which carieth with it all inferiour bodies moueable, aswel celestiall as elemental: which motion of the waters is most euidently seene in the Sea, which lieth on the Southside of Afrike.‖ . . . . .

---

* Vol. I, p. 492.

† Vol. II, p. 362.

‡ Possibly as far south as North Carolina, but probably not far south of Delaware. See U. S. C. & G. Survey Report, 1890, pp. 475–476. The name probably has reference to the fishing grounds off Newfoundland.

§ Hakluyt, Vol. III, p. 30.

‖ Hakluyt, Vol. III, p. 36. "The sea hath three motions. 1. Motum ab oriente in occidentem. 2. Motum fluxus & refluxus. 3 Motum circularem. Ad cœli motum elementa omnia (excepta terra) mouentur." This last sentence expresses the opinion held by Columbus and the other early navigators.

Futhermore, the current in the great Ocean, could not haue beene maintained to runne continually one way, from the beginning of the world unto this day, had there not beene some thorow passage by the fret aforesayd,* and so by circular motion bee brought againe to maintayne it selfe: For the Tides and courses of the sea are maintayned by their interchangeable motions: as fresh riuers are by springs, by ebbing and flowing, by rarefacation and condensation.†

So that it resteth not possible (so farre as my simple reason can comprehend) that this perpetuall current can by any means be maintained, but onely by continuall reaccesse of the same water, which passeth thorow the fret, and is brought about thither againe, by such circular motion as aforesayd.‡

. . . And first it may be called in controuersie, whether any current continually be forced by the motion of Primum mobile, round about the world, or no: For learned men doe diuersly handle that question. The naturall course of all water is downeward, wherefore of congruence they fall that way where they finde the earth moste lowe and deepe: in respect whereof, it was erst sayd, the seas doe strike from the Northern landes Southerly.§ Violently the seas are tossed and troubled diuers wayes with the windes, encreased and diminished by the course of the Moone, hoised vp & downe through the sundry operations of the Sunne and the starres: finally, some be of opinion, that the seas be carried in part violently about the world, after the dayly motion of the highest moueable heauen, in like manner as the elements of ayre and fire, with the rest of the heauenly spheres, are from the East unto the West. And this they doe call their Easterne current, or leuant streame.‖

. . . . . .

75. The sixt book of the first Decade, to Lodouike Cardinal of Aragonie. Written by Peter Martyr of Angleria Milenoes, Counsayler to the Kyng of Spaine. The third voyage of Colonus the Admirall [1498].

No great space from this Ilande, [Puta] euer towarde the West, the Admiral [Colonus] saith he found so outragious a fal of water, running with such a violence from the East to the West, that it was nothing inferiour to a mightie streame falling from high mountaynes. Hee also confessed, that since the first day that euer hee knewe what the sea meant, hee was neuer in such feare. Proceeding yet somewhat further in this daungerous voyage, he founde certaine goulfes of eight myles, as it had bin the entraunce of some great hauen, into the which the sayde violent streames did fall. These goulfes or streyghtes hee called Os Draconis, that is, the Dragones mouth: and the Iland directly ouer against the same, hee called Margarita. Out of these strayghtes, issued no lesse force of freshe water, whiche encountering with the salt, dyd striue to passe foorth, so that betwene both the waters, was no small conflict: But entering into the goulfe, at the length hee founde the water thereof very fresh and good to drinke.¶

76. *Francis Bacon* (1561–1626).

The chief merit of Bacon's essay entitled "De fluxu et refluxu maris," apart from its suggestions of inquiry into the tides of various countries, is the insistence upon the progressive character of the tide causing it to move from place to place; that is, the waters do not boil up, as it were, and produce everywhere simultaneous tides. He thinks, however, that the semimenstrual and semiannual inequalities may occur everywhere simultaneously, or at least upon the same day. He says:

That this** should be done so quickly, namely, twice a day; as if the earth, according to that foolish conceit of Apollonius, were taking respiration, and breathing out water every six hours and then taking it in again; is a very great difficulty.

He notes that this simultaneous rising is not proven from reports concerning certain wells, nor even from the (then supposed) fact that tides are simultaneous at Florida and the coasts of Europe. He remarks that this may result naturally enough from the tide coming from the Indian Ocean around southern Africa.

Besides the sexhorary motion, the semimonthly, and the semiannual, "whereby the tides receive a great and remarkable increase at the equinoxes," he mentions a monthly motion which he may have indistinctly connected with the moon's parallax.

He believes the earth to stand fixed while all of the universe outside, including the air and waters of the sea, has a tendency westward,—the heavenly bodies moving much more rapidly than the air or the waters of the sea. He believes that the two continents so obstruct the tidal waters,

* About the north of Labrador.

† "The flowing is occasioned by reason that the heate of the moone boyleth and maketh the water thinne by way of rarefaction."

‡ Hakluyt, Vol. III, p. 36, 37.

§ Cf. Saint-Pierre.

‖ Hakluyt, Vol. III, p. 52.

¶ Vol. V, p. 196.

** I. e., rise and fall of the tide.

which would otherwise progress uniformly but slowly from east to west around the earth, that their progressive motion is converted into a motion whose period is a half lunar day; also, that, because of this westward motion, those gulfs or bays which open eastward should have larger tides than similar bodies of water opening westward.

Concerning the coincidences in the periods of the tides and of the heavenly bodies he says:

Yet it will not immediately follow (and we would have men observe this) that things which correspond in the course and periods of time, or even in the manner of carriage, are in their nature subordinate, and the cause one of the other. For I do not go so far as to assert that the motions of the moon or sun are set down as the causes of the inferior motions which are analogous to them, or that the sun and moon (as is commonly said) have dominion over those motions of the sea (though such thoughts easily find entrance into men's minds by reason of their veneration for heavenly bodies); indeed in that very half-monthly motion (if rightly observed) it would be a very strange and novel kind of obedience, for the tides at the new and full moon to be affected in the same way, while the moon is affected in opposite ways; and many other things might be adduced which would destroy these fancies about dominations, and lead us rather to conclude that these correspondences arise out of the universal passions of matter, and the primary combinations of things, not as if one were governed by the other, but that both emanate from the same origins and follow causes. Nevertheless (however it be) what I have said remains true, that nature delights in correspondences, and scarce admits anything unique or solitary.*

77. *William Gilbert* (1540–1603). Gilbert, in his New Philosophy,* asserts that the moon and earth have a mutual attraction for each other analogous to magnetic attraction; that the tides are produced by this force of the moon and not by its rays or its light. He cannot see how the ebbing of the tide follows from the direct attraction unless the interior of the earth contain humors which retreat into the earth when the tide forces cease, and so cause the surface of the sea to descend. He finds difficulty also in understanding why earth and moon do not fall together.

John Kepler (1571–1630). As early as 1598, Kepler took exception to the views of Galileo concerning the cause of the tides. In the introduction to the Cosmographical Mystery he says:

For he who attributes the motion of the seas to the motion of the earth, clearly assumes a violent motion; but he who says that the seas adhere to the moon, makes in part a natural assumption.‡

In his Foundations of Astrology (1602) he asserts, in Thesis 15, that, as proven by experience, all things swell up with the waxing moon and subside when she is waning. This foreknowledge is useful in housekeeping, farming, medicine, and navigation. But he says:

Physicists have not yet fully ascertained the reason for this sympathy.§

In Thesis 47 he likens the circulation of the waters of the earth to the circulation of living animals, and suggests that the observations of many years must needs be collated in order to investigate any long-period circulation which may exist. He says:

Hereupon Caesius attributes something to the nineteen-year cycle of the moon; from whom, indeed, all faith can not be taken away. For mariners say the greatest tides return upon the same days of the year after the period of 19 years; and the moon, loaded with vapors, seems suitable for this purpose, because she possesses either an excess or a deficit of moisture.‖

This is probably the first hint at a 19 year inequality in the tides. Pliny supposed an inequality of 100 lunar months to exist.

In the introduction to the Motions of the Planet Mars, Kepler lays down the following axioms concerning gravitation and the cause of the tides (1609). He is the first to assert that the attractive forces exercised by earth and moon upon each other are proportional to their respective masses.

Therefore the true doctrine of gravity depends upon these axioms:

Any corporeal substance, seeing that it is corporeal, is by nature destined to rest in any place, in which it is placed alone outside the sphere of virtue of a cognate body.

Gravity is a mutual corporeal affection among cognate bodies to union or conjunction (in which class of things is also the magnetic faculty) such that the earth attracts a stone by as much more as the stone travels toward the earth.

---

* The Works of Francis Bacon (Edition Spedding et al.), Vol. V, p. 448.

† De Mundo Nostro Sublunari, Philosophia Nova, (1651). See also De Magnete, Magneticisque Corporibus, et de et de Magno Magnete Tellure" (1600); translation by Mottelay (1893).

‡ Opera Omnia (Edition Ch. Frisch, 1865–71) Vol. I, p. 64.

§ Ibid., p. 422.

‖ Ibid., p. 430.

Heavy bodies (especially if we place the earth in the center of the universe) are not carried to the center of the universe, as to the center of the universe, but as to the center of a round cognate body such as the earth. Therefore wherever the earth is located or wherever it is transported by its animal faculty, heavy bodies are always drawn toward it.

If the earth be not round, heavy bodies will not be borne from everywhere straight to the middle point of the earth, but will be borne to diverse points from diverse sides.

If two stones be located in any part of the universe, mutual neighbors outside the sphere of influence of the third cognate body, these stones in the similitude of two magnetic bodies will come together in an intermediate place, the first approaching the other by so much space, as the other is a heavy mass in comparison.

If the moon and earth were not retained by animal force or some other equal [force], each in its orbit, the earth would ascend toward the moon a fifty-fourth part of the space, and the moon would descend toward the earth about 53 parts of the space, where they would be united: provided, however, that the substance of both be of one and the same density.

If the earth should cease to attract its waters, all marine waters would be elevated and would flow into the body of the moon.

The sphere of the attracting virtue, which is in the moon, extends to the earth and incites the waters under the Torrid Zone, because of its meeting [with them] wheresoever she happens to be in the zenith of the place; [they are incited] insensibly in enclosed seas, but sensibly where there are very broad beds of the ocean, and abundant liberty of reciprocation for the waters; by which cause the shores in the zones and neighboring climes are made bare and even as far as the Torrid Zone, the neighboring oceans cause the waters of gulfs to be more reduced. Therefore in a broader bed of the ocean, the waters being in motion, it may happen that in its more narrow gulfs, provided not too closely confined, the waters, when the moon is present, may even seem to flee from her: in fact, they subside when the abundance of water is diminished outside.

The moon speedily traversing the heavens, although the waters cannot follow as quickly, causes a westward flow in the Torrid Zone, until it impinges against opposing shores and is deflected from them; the assembly or army of waters is indeed dissolved by the departure of the moon, which [water] is in its march toward the Torrid Zone, because deserted by the attraction which had called it forth, and with its vigor taken away, as in water vases, goes back and leaps against its shores and conceals them: and this impetus begets through the absence of the moon another impetus, until the returning moon receives and moderates the curbs of this impetus and at the same time with her motion turns them about. Thus shores equally bare are all filled at the same hours, but the more distant shores are filled later, some in diverse manners because of diverse approaches of the ocean.*

In the fourth book of his Harmonics† (1619) Kepler likens the tide to the breathing of terrestrial animals and especially to the breathing of fishes; but it does not follow from this that he renounced his earlier views.

Of those who attributed the tides to some attraction of the moon analogous to magnetic attraction, may be mentioned, Scaliger, Gilbert, the College of Jesuits at Coimbra, Antonio de Dominis, and Stevin.

78. *Galileo Galilei* (1564–1642).

The fourth dialogue of Galileo's System of the World‡ is devoted to the discussion of the tides. His object is to show that they are due to the non-uniform motion (in space) of the particles of the sea and solid earth, and that their presence goes to prove the earth's axial rotation and its motion around the sun.§ Since the earth turns from west to east and also moves eastward in its orbit, the actual motion of a place in the nighttime must be greater than the actual motion of the same place in the daytime; hence the diurnal acceleration and retardation of the otherwise uniform motion in space of any given sea, and hence the tidal cause whose period is a solar day. Galileo does not realize that the tides call for the lunar instead of the solar day. In 1616 Kepler points out to Galileo that the lunar day should be taken.‖

He notices that there are several "varieties" of tidal movements depending upon the localities. Considerable tides may be accompanied by weak currents or by strong currents, and small tides may be accompanied by strong currents, as happens around several islands of the Mediterranean. Such "varieties" he thinks would be present if a vessel (like the Mediterranean Sea) be subjected to a non-uniform movement, but not otherwise. He notices that (analogous to the pendulum) the undulations of waters in short vessels are more frequent than in long vessels; also that an increase of depth increases their frequency.¶

---

* Opera Omnia, Vol. III, p. 151.

† Opera Omnia, Vol. V, p. 255.

‡ Galileo's earlier paper on tides, written in 1616 and entitled "Discorso sopra il flusso e reflusso del mare" (Opere, Vol. II), contains the same theory as that found in his System of the World.

§ Kepler points out that this is no proof of the earth's motion, Opera Omnia, Vol. VI, p. 180.

‖ Kepler, Opera Omnia, Vol. II, pp. 116, 117.

¶ Cf. Forel's seiche period, § 31.

In reference to certain other hypotheses the dialogue reads:*

And there dwelleth not many miles from hence a famous Peripatetick, that alledgeth a cause for the same newly fished out of a certain Text of *Aristotle*, not well understood by his Expositors, from which Text he collecteth, that the true cause of these motions doth only proceed from the different profundities of Seas: for that the waters of greatest depth being greater in abundance, and therefore more grave, drive back the Waters of lesse depth, which being afterwards raised, desire to descend, and from this continual colluctation or contest proceeds the ebbing and flowing. Again those that referre the same to the Moon are many, saying that she hath particular Dominion over the Water; and at last a certain Prelate† hath published a little Treatise, wherein he saith that the moon wandering too and fro in the Heavens attracteth and draweth towards it a Masse of Water, which goeth continually following it, so that it is full Sea alwayes in that part which lyeth under the Moon; and because, that though she be under the Horizon, yet nevertheless the Tide returneth, he saith that no more can be said for the salving of that particular, save onely, that the Moon doth not onely naturally retain this faculty in her self; but in this case hath power to confer it upon that degree of the Zodiack that is opposite unto it. Others, as I believe you know, do say that the Moon is able with her temperate heat to rarefie the Water, which being rarefied, doth thereupon flow.

Later on in the dialogue still other theories are referred to.

Galileo's indistinct notion of the tidal period and his contempt for the idea that the moon is the principal cause of the tides may be gathered from the following extracts:

The period of six hours therefore is no more proper or natural than those of other intervals of times, though indeed its the most observed, as agreeing with our Mediterrane, which was the onely Sea that for many Ages was navigated: though neither is that period observed in all its parts; for that in some more august places, such as are the *Hellespont*, and the *Ægean* Sea, the periods are much shorter, and also very divers amongst themselves; for which diversities, and their causes incomprehensible to *Aristotle*, some say, that after he had a long time observed it upon some cliffes of *Negropont*, being brought to desperation, he threw himself into the adjoyning *Euripus*, and voluntarily drowned himself.

. . . . . .

Now follow the two other Periods, Monthely, and Annual, which do not bring with them new and different Accidents, other than those already considered in the diurnal Period; but they operate on the same Accidents, by rendring them greater and lesser in several parts of the Lunar Moneth, and in several times of the Solar Year; as if that the Moon and Sun did each conceive it self apart in operating and producing of those Effects; a thing that totally clasheth with my understanding, which seeing how that this [movement] of Seas is a local and sensible motion, made in an immense mass of Water, it cannot be brought to subscribe to Lights, to temperate Heats, to predominacies by occult Qualities, and to such like vain Imaginations, that are so far from being, or being possible to be Causes of the Tide; that on the contrary, the Tide is the cause of them, that is, of bringing them into the brains more apt for loquacity and ostentation, than for the speculation and discovering of the more abstruse secrets of Nature; which kind of people, before they can be brought to prononnce that wise, ingenious, and modest sentence, *I know it not*, suffer to escape from their mouths and pens all manner of extravagancies.

Galileo thinks the monthly inequality due to a supposed retardation and acceleration in the earth's orbital motion, caused by the moon being alternately outside and inside of the earth's orbit, and his reason for this is that distant bodies have longer periodic times of revolution about the sun than near ones. He believes that this irregularity of motion may be too small to have been observed by astronomers and yet sufficiently great for producing the tides.

But how each Planet governeth itself in its particular revolution, and how precisely the structure of its Orb is framed; which is that which is vulgarly called the *Theory* of the *Planets*, we cannot as yet undoubtedly resolve.

. . . . . .

But amongst all the famous men that have philosophated upon this admirable effect of Nature, I more wonder at *Kepler* than any of the rest, who being of a free and piercing wit, and having the motion ascribed to the Earth, before him, hath for all that given his ear and assent to the Moons predominancy over the Water, and to occult properties, and such like trifles.

Because of its author, the system of Galileo attained recognition from numerous sources. *Gassendi* (1592–1655), in his De Æstu Maris follows Galileo in the main; and it appears by his later writings that Kepler may in part have renounced his own more rational views. Riccioli explains Galileo's system at considerable length; the attempts of Balianus and Wallis in this direction are given below. *Fournier* at times, in his Hydrographie, resumes Galileo's theory as modified by Gassendi, but he was not altogether pleased with it.

In justice to Galileo it should be added that he at one time contemplated a treatise on the theory of tides, but that his religious persecutors rendered it well-nigh impossible for him to continue his scientific work.

* Thomas Salusbury's translation, found in his Mathematical Collections and Transactions (London, 1661).

† Antonio de Dominis, Archbishop of Spalatro.

79. *John Baptist Riccioli* (1598–1671). In the second, fourth, and ninth books of his Almagestum Novum,* Riccioli treats of the tides.

Galileo's system or theory is explained and refuted at some length. He quotes the theses laid down by Kepler, and mentions a great number of other theories both ancient and modern, thus giving much historic value to his work.

Riccioli divides the ordinary motions of the sea into three classes: Motion in latitude, in longitude, and in height. The last he regards as the tide—the *æstus* or the *fluxus ac refluxus*. The motions from east to west are real or supposed ocean currents, but the north-and-south motions are, at least in part, tidal. For example, he speaks of their period being twenty-four hours around the Molucca and Philippine Islands.

He gives some account of the tides of Europe including the Mediterranean Sea, and makes some mention of the tides in America. For example, he states that at the island of Martinique and in the Caribbean Sea the sea rises scarcely 1 foot.

He gives a table showing for various localities the times of high water at new and full moon; also a table, after Fournier, showing the times of tide for each day of the month. The values upon successive days generally become later by 48 minutes and recur after an interval of 15 days.

John Baptist Balianus.† This writer undertakes to supplement the most obvious defect of Galileo's theory by supposing the moon to describe the orbit about the sun, and the earth to accompany the moon revolving about the latter every month. This would give alternate accelerations and retardations in motions in space of any given point of the earth, and the period would be a lunar instead of a solar day.

Later, Dom Jacques Alexandre, Benedictine, in a paper on tides which took the prize of the Academy of Bordeaux in 1726 adopts the hypothesis of Balianus. M. de Mairan refutes this in the Mémoires de l'Académie, 1727.

Jeremiah Horrox (c. 1619–1640). Horrox, the astronomer, observed tides for three months in 1640 shortly before his death, which occurred when he was only 21 or 22 years of age.

Horrocks appears to have been the first person who undertook the prosecution of a continuous course of observations of the tides, for the express purpose of obtaining a series of facts which might form the ground work of a philosophical investigation of the subject.‡

It seems, however, that the heights of remarkably high tides upon the Thames have been recorded ever since the Norman conquest,§ and that Caudale made in 1575 several observations on the tides at the mouth of the Garonne.‖

80. *René Descartes* (1596–1650).

In the fourth part of his Principles of Philosophy, Descartes attempts (c. 1644) to explain the tides in accordance with his theory of the movements of the heavenly bodies set forth in the third part. According to the vortex theory, the sun, being at the center of the solar system and surrounded by a boundless fluid, does, by its axial rotation, set in motion the fluid layer adjacent to it; this layer imparts its motion to the adjoining layer; this in turn to the next, and so on to the distant parts of space. The planets placed in their respective fluid layers are in this way carried about the sun. Similarly, each planet, because of its axial rotation, is the center of a secondary vortex system. In this are involved not only the satellites attending the planet, but likewise the air and water by which it is surrounded. By means of the intervening fluid, he supposes the moon to exert a pressure upon the atmosphere and, in some way, produce the tides, low water when she is upon the meridian and high water when 90 degrees distant. He supposes that spring tides are due to the moon's approaching the earth in a syzygy, and that neap tides are due to her receding from the earth when in quadrature.

The vortex theory of the universe appealed to the popular imagination, because there seemed to be no occult or unfamiliar properties of matter involved. It exerted a considerable influence for about one hundred years. The last honor paid to it by the Academy of Sciences of Paris was in the year 1740 when the essay of Cavalleri received a prize along with the essays of Bernoulli, Maclaurin, and Euler.

---

* First printed in 1651.

† Riccioli, Almagest. Novum, Bk. 9.

‡ Grant's History of Physical Astronomy, p. 428.

§ Childrey, Phil. Trans. (1670); Abr. Vol. I, p. 516.

‖ Lalande, Astronomie, Vol. IV, p. 35.

In Propositions LII and LIII, Bk. II, Newton shows the inability of the vortex theory to account for the planetary motions. For, in order that the planets be so carried, their periodic times must be as the squares of their distances from the sun, and, moreover, their densities must be the same as that of the surrounding fluid.

As already noted (§66), Seleucus held a view somewhat similar to that of Descartes. Among writers upon tides who adopted this explanation are Varenius and Jacques Cassini.

81. *Bernhardus Varenius* or *Bernhard Varen* (1622-1670).

The *Geographia Generalis* of Varenius appeared in 1650; in 1733 the work was translated into English by Dugdale,* and it is from this that the following quotations upon the subject of the tides are taken.

Although apparently not satisfied with Descartes's explanation, he accepts it, with some amendments, as the most plausible one known to him.

He states that, as shown by observation, water has but one natural motion, viz. from a higher to a lower place; also that—

The general Motion of the Sea is twofold; the one is constant, and from East to West: the other is composed of two contrary Motions, and called the Flux and Reflux of the Sea, by which, at certain Hours, it flows towards the shores, and at others back again.

He instances numerous straits where the east-to-west motion is very strong.

The Cause of this general Motion of the Sea from East to West is uncertain.

THE *Aristotelians* (tho' neither they, nor their Master, nor any *European* Philosopher, had the least Notion of these Things, before the *Portuguese* sailed thro' the ocean in the *Torrid Zone*) suppose, that it is caused by the Prime Motion of the Heavens, which is common not only to all the Stars, but even, in part, to the Air and Ocean; and by which they, and all things, are carried from East to West. Some *Copernicans* (as *Kepler, etc.*), altho' they acknowledge the Moon, to be the prime cause of this Motion, yet they make the Motion of the Earth not a little contribute to it, by reason that the Water, being not joined to the earth, but contiguous only, cannot keep up with it's quick Motion towards the East; but is retarded and left toward the West; and so the Sea is not moved from one Part of the Earth to another, but the Earth leaves the Parts of the Sea one after another.

OTHERS, who are satisfied with neither of these Causes, have recourse to the Moon; which they will have to be the Governess of all Fluids, and therefore to draw the Ocean round with her from East to West. If you ask, how she performs this? They answer, it is, by an occult Quality, a certain Influence, a Sympathy, her Vicinity to the Earth, and such like. It is very probable indeed the Moon, some way or other, causes this Motion, because it is observed to be much more violent at the New and Full Moon, than about the Quadratures, when it is, for the most Part, but small.

THE ingenious *des Cartes* mechanically explains how the Moon may cause this Motion, both in the Water, and the Air.

He then attempts to explain this motion by Descartes's theory.

After attempting to derive the phenomenon of the tides from considering the westward flowing current he says:

HENCE we may determine, that the Flux and Reflux of the Sea is no way distinct from that general Motion, which we explained in the former Proposition, whereby the Ocean is perpetually moved from East to West; for it is only a certain Mode or Property of that Motion.

. . . . . .

To explain the Cause of the Swelling and Swaging of the Sea, vulgarly called it's Flux and Reflux.

THERE is no Phænomenon in Nature that has so much exercised and puzzled the Wits of Philosophers and learned Men as this. Some have thought the Earth and Sea to be a living Creature, which, by it's Respiration, causeth this ebbing and flowing. Others imagined that it proceeds, and is provoked, from a great Whirl-pool near *Norway*, which, for Six Hours, absorbs the Water, and afterwards, disgorges it in the same space of Time. *Scaliger*, and others, supposed that it is caused by the opposite Shores, especially of *America*, whereby the general Motion of the Sea is obstructed and reverberated. But most Philosophers, who have observed the Harmony that these Tides have with the Moon, have given their Opinion, that they are entirely owing to the Influence of that Luminary. But the Question is, what is this Influence? To which they only answer, that it is an occult Quality, or Sympathy, whereby the Moon attracts all moist Bodies. But these are only Words, and signify no more than that the Moon does it by some means or other, but they do not know how: Which is the Thing we want.

He then returns to Descartes for an explanation of the phenomenon and offers some amendments.

---

* "A Compleat System of General Geography: . . . . Originally written in Latin by Bernhard Varenius, M. D., since improved and illustrated by Sir. Isaac Newton and Dr. Juri London, 1734, Vol. I, Ch. 14.

Having noted that greater tides happen at the syzygies than at the quadratures because the moon is nearer to the earth in the first instance, he says:

YET in some Places there are higher Tides at the Full Moon than at the New, which I cannot account for, unless they be the Effects of it's greater Light at that time. Nor can it be otherwise explained, why at the Full Moon Vegetables and Animals are impregnated with a greater quantity of Sea Moisture, than at the New, tho' even then the Tides are every whit as high. It is very wonderful what one *Twist*, a *Dutchman*, relates in his Description of *India*. He says, that in the Kingdom of *Guzarat* (where he lived many Years) their Oysters, and Crabs, and other Shell Fish, are not so fat and juicy at the Full Moon as at the New, contrary to their Nature in all other Places. Nor is it less admirable, that on the Coast of the same Kingdom, near the Mouths of the River *Indus*, the Sea swells, and is troubled, at the New Moon, when not far from hence, *viz.* in the Sea of *Calicut*, the greatest Rise of the Waters is at the Full. But it is requisite that we should have repeated Enquiries and Observations about these Matters, before we pretend to solve their Phaenomena.

. . . . . .

DES Cartes pretends to account for this Phaenomenon by his Hypothesis, but I cannot apprehend his Meaning by his Words, nor how it can be deduced from it. It is probable, that the Sun and the general Winds may contribute much to raise these Tides, when, in the equinoxes, the Sun is vertical to the Ocean in the middle of the *Torrid Zone*, and therefore may cause both the Wind and Water to rage, and the former to agitate the latter. The contrary of which may happen about the Solstices. Or we may say, that these extraordinary Tides then happen by the same Reason, and proceed from the same Cause that frequent Rains and Inundations proceed from in these Seasons.

. . . . . .

THE Flux is caused by the Pressure of the Moon, or the celestial Matter, between it and the Sea, and continues no longer than the Cause forces it: but in the Ebb, the Sea only flows from a higher to a lower Place, which is the natural Motion of the Water.

The tides are generally highest in those places over which the moon is vertical—

BECAUSE those Places are more pressed, and the swelling of the Sea is greater, over which the Moon squeezeth the celestial Matter, whereby greater Tides are produced: but where the incumbent Matter is less squeezed, and other Causes conspire, the Alteration will be less.

. . . . . .

SINCE the Moon, in the Meridian, is nearer any Place than when she is in the Horizon, (because the Hypotenuse of any right-angled Triangle is longer than the Perpendicular) it follows (by Proposition 16, of this Chapter) that then it ought to be High Water in that Place (where she is full South). And when she is full North, or in the lower Part of the Meridian Circle, it ought to be also High Water in the same Place, because, tho' she be not there, yet the opposite Part of the Vortex of the Earth is straitned, and hath the same Effect, as if the Body of the Moon itself were present.

. . . . . .

Then follow descriptions of tides in numerous localities, also a somewhat improved table for finding the time of the moon's transit from the age of the moon. As usual, no account is taken of the sun's effect because the moon alone is supposed to be responsible for the tides.

The Gyrations of the Sea, which we call Vortexes, or Whirlpools, are of three Kinds.

SOME Whirlpools only turn the Water in a Round; others at Times absorb, and emit or vomit it up; and some again suck it in, but do not cast it out. And doubtless there is a fourth Kind somewhere in the Channel of the Sea, which may throw out Water but takes none in. I do not remember any such to be recorded by Authors; only upon the dry Land there are several observed. The *Dutch* Mariners call these Whirlpools *Maelstroom*.

THERE are but very few of these, at least, that have been taken Notice of.

BETWEEN *Negropont* and *Greece* there is a famous Whirlpool; called the *Euripus*, much talked of because of the fabulous Story of *Aristotle's* dying there. *Scaliger* endeavours to explain it thus. It is not much amiss (says he) to suppose the Water, received into the Caverns, in the Cliffs of the Rocks below, issueth from thence; for by the continual running in of the Water the little rocky Bays are filled, and being full, they emit what they received, thro' winding and subterraneous Passages; whose Capacity is such, that they pour out the Water for so many Hours, whereby the Tides are now obstructed or repelled, and a little after forwarded or helped. But any one may perceive the insufficiency of this Cause.

THE *Maelstroom* on the Coast of *Norway*, is the swiftest and largest known Vortex; for it is said to be thirteen *Dutch* Miles in Circuit; in the middle of which there is a Rock, which the People thereabouts call the *Mouske*. This Whirlpool, for six Hours, sucks in whatever approaches it, or comes nigh it; not only Water, but Whales, loaded Ships, and other Things; and in as many Hours disgorges them all again, with a hideous Noise, Violence, and whirling round of the Water. The Cause is latent.

BETWEEN *Normandy* in *France*, and *England*, there is a Whirlpit, toward which Ships are drawn with an incredible Celerity; but when they come near the middle of the Swallow, they are, with the same Force, thrown out again.

Isaac Vossius (1618–1689), in his book entitled De Motu Marium et Ventorum, contends that the tides are produced by the heat of the sun, and that their apparent connection with the moon is only a casual synchronism.*

* Reviewed by Wallis, Phil. Trans. (1666) [Vol. I, p. 286]; Abr., Vol. I, p. 105.

82. *Dr. John Wallis* (1616–1703).

Largely in accord with Galileo's explanation of the tides in his System of the World, is the hypothesis of Dr. Wallis, found in Philosophical Transactions for the year 1666.

Galileo's theory makes the tides depend upon the non-uniform motion (in space) of the different parts of the earth; that is, the places having night go eastward faster than those having day. Wallis takes into account the fact that the earth's center does every month describe an orbit about the common center of gravity of earth and moon, and not about the moon itself as Balianus assumes. This causes the places having the moon below the horizon to move faster than those having the moon above. This gives an acceleration and retardation having a period of a lunar day—a period which Galileo did not obtain. Neither writer, however, makes it clear why there should be two high waters and two low waters daily instead of one.

[To show that the tides cannot be caused except by the existence of attraction, we may proceed as follows:

Suppose the axial rotation of the earth were zero; then (at least for a long time) a given hemisphere of the earth would face a certain fixed star as the earth is carried around the center of gravity of itself and the moon. Every particle of the earth would then have equal and parallel motions and so, of course, equal centrifugal forces. Hence there could be no differential or tidal forces from this cause alone.

But given sufficient time, and some kind of mutual attraction between earth and moon which are supposed to be revolving, without axial rotation, about their common center of gravity; the two bodies will eventually face each other and revolve upon their axes once a month as if parts of one rigid body, and the spherical surface of the water will then have become spheroidal, chiefly, we may now suppose, on account of the centrifugal force. But the amount of this centrifugal deformation is obviously zero when the axial rotation is zero, and it can become sensible only when the axial rotation becomes, or tends to become, monthly. But in the case of nature, the earth has an axial rotation whose period is constant and no approach to the month. Hence this centrifugal force can have no effect upon the tide.*]

He tries to account for the spring and neap tides by the fact that when the moon is full the velocity (in space) of the earth's center about the sun is a minimum; when new, a maximum; and when in quadrature, the velocity has its mean value.

In quotations given below it will be noticed how nearly Wallis comes to the solution of the problem of universal gravitation.†

The sea's ebbing and flowing has so great a connexion with the moon's motion, that in a manner all philosophers have attributed much of its cause to the moon, which either by some occult quality, or particular influence which it has on moist bodies, or by some magnetic virtue, drawing the water towards it, which should therefore make the water highest where the moon is vertical, or by its gravity and pressure downwards upon the terraqueous globe, which should make it lowest, where the moon is vertical, or by whatever other means, has so great an influence on, or at least connexion with, the sea's flux and reflux, that it would seem very unreasonable to separate the consideration of the moon's motion from that of the sea: the periods of tides, to say nothing of the greatness of them near the new and full moon, so constantly waiting on the moon's motion, that it may be well presumed, that either the one is governed by the other, or at least both by some common cause.

I consider therefore, that in the tides, or the flux and reflux of the sea, besides extraordinary extravagances, or irregularities, whence great inundations or strangely high tides follow, (which yet perhaps may prove not to be so merely accidental as they have been thought to be, but might from the regular laws of motion, if well considered, be both well accounted for, and even foretold;) these three notorious observations are made of the reciprocation of tides.

1. The diurnal reciprocation; whereby twice in somewhat more than 24 hours, we have a flood and an ebb;

---

* The idea that the tides are due in part to a centrifugal disturbing force supposed to be set up because the earth is carried around the center of gravity of it and the moon or sun, has appeared from time to time since the days of Wallis. E. g., Hube, "Vollständiger und fasslicher Unterricht in der Naturlehre," Pt. III (Leipzig, 1794), pp. 210 et seq.; Alexander Wilcocks, "An Essay on the Tides" (Phila., 1855); P. E. Chase, Jour. Frank. Inst., Vol. 47 (1864), pp. 137, 208; Newcomb, Popular Astronomy (1878), p. 91. This part of the explanation does not appear in Newcomb and Holden's Astronomy. It is, however, still given in some text-books and popular lectures. Bernoulli, in the third and fourth chapters of his essay on tides, especially mentions the inability of this centrifugal force to alter the figure of the earth.

In this connection, see Thomson and Tait, § 813; also Darwin, Nature, Vol. 43 (1891), p. 609.

† "Hypothesis on the Flux and Reflux of the Sea," Phil. Trans. (1666) [Vol. I, pp. 263-281]; Abr., Vol. I, pp. 89-101. In quoting, Hutton's abridgment will generally be followed.

or a high-water and low-water. 2. The menstrual; whereby in one synodical period of the moon, suppose from full-moon to full-moon, the time of those diurnal vicissitudes moves round through the whole compass of the *Νυχθήμερον*, or natural day of 24 hours; as for instance, if at the full moon the full sea be at such or such a place just at noon, it shall be the next day at the same place somewhat before one of the clock; the day following, between one and two; and so onward, till at the new moon it shall be at midnight; the other tide, which in the full moon was at midnight, now at the new moon coming to be at noon; and so forward, till at the next full moon the full sea shall at the same place come to be at noon again: Again, that of the spring tides and neap tides; about the full moon and new moon the tides are at the highest, at the quadratures the tides are at the lowest; and at the times intermediate, proportionably. 3. The annual,* whereby it is observed, that at some part of the year, the spring tides are yet much higher than the spring tides at others, which times are usually taken to be at the spring and autumn or the two equinoxes; but I have reason to believe, as well from my own observations for many years, as of others who have alike observed it, that we should rather assign the beginnings of February and November, than the two equinoxes.

In his explanation, as already intimated, he attributes the tides to the rotation of the earth upon its axis, the revolution of moon and earth about their common center of gravity, and the revolution of this common center about the sun,—gravity serving merely as a tie to connect the bodies, their motions causing the tides.

From this quotation it is seen that the semi-annual variation in the phase inequality (in height) was known to Wallis although he was for some years mistaken in thinking the times of its maxima could fall far from the equinoxes.† He attempts to explain this non-coincidence with the equinoxes by the inequality in the length of the solar day, or rather by the cause of the inequality In further discussion of the subject, he distinctly suggests an annual variation in the phase inequality (in height) due to the sun being in apogee or perigee.‡ To clear up these questions he very properly suggests the observing of low waters as well as of high, and the selecting of stations near the open sea.§

To return to the question of gravitation. In reply to an objection to this portion of his theory, he says:‖

> To the first objection of those you mention, That it appears not how two bodies that have no tie can have one common centre of gravity; that is, for so I understand the intendment of the objection, can act or be acted in the same manner as if they were connected: I shall only answer, that it is harder to show how they have than that they have it. That the loadstone and iron have somewhat equivalent to a tie, though we see it not, yet by the effects we know. And it would be easy to show that two loadstones at once applied in different positions to the same needle, at some convenient distance, will draw it, not to point directly to either of them, but to some point between both; which point is, as to those two, the common centre of attraction; and it is the same as if some one loadstone were in that point. Yet have these two loadstones no connection or tie, though a common centre of virtue, according to which they jointly act. And as to the present case, how the earth and moon are connected, I will not now undertake to show, nor is it necessary to my purpose; but that there is somewhat that does connect them, as much as what connects the loadstone and the iron which it draws, is past doubt to those who allow them to be carried about by the sun, as one aggregate or body, whose parts keep a respective position to one another: Like as Jupiter with his four satellites, and Saturn with his one. Some tie there is that makes those satellites attend their lords, and move in a body; though we do not see that tie, nor hear the words of command. And so here.

This is a close approach to Newton's discovery, but the *law* of the supposed attraction is not stated. Halley, however, in 1684 concluded that the centripetal force in planetary orbits must be inversely as the square of the distance.¶ Kepler had asserted, in 1609, that the force is proportional to the masses. Newton discovered and established the law of universal gravitation in 1682, but the details of its extension to physical and astronomical questions extended over a few succeeding years,—until the publication of the Principia in 1687.

---

* See under Strabo, Pliny, Seneca, and Bacon.

† See Table 31, observing the variation in S_2 due to T_2 and solar K_2; or the table given in § 58, factor for (Sg—Np). Captain Sturmy speaks of these as the "annual spring tides" and states that he has observed that they happen in March and September. Phil. Trans. (1668) [Vol. III, p. 813]; Abr. Vol. I, p. 290. See note under § 70.

‡ Phil. Trans. (1666) [Vol. I, p. 283]; Abr., Vol. I, p. 102; see also Phil. Trans. (1670); Abr., Vol. I, pp. 521, 522.

§ Phil. Trans. (1666) [Vol. I, pp. 283–285]; Abr., Vol. I, pp. 112, 113.

‖ "An Appendix, written by Way of Letter to the Publisher, being an Answer to some Objections made by several Persons to the preceding Discourse." Phil. Trans. (1666) [Vol. I, pp. 281–286]; Abr., Vol. I, pp. 101–107.

¶ Phil. Trans. (1676); Abr., Vol. II, p. 327, note; Grant's History of Physical Astronomy, pp. 27–30.

See Newton's Principia, Bk. I, Prop. IV, Cor. 6, Scholium.

Also Humboldt's Kosmos, Vol. III, pp. 18–21 (Cosmos, Vol. III, pp. 18–22, Otté's translation).

Ibid., Vol. II, pp. 348, 349 (Vol. II, pp. 689–691, Otté's trans.).

Also Lalande's Astronomie, §§ 3379–3382, and Brewster's Life of Sir Isaac Newton, Ch. XI.

Later replies by Wallis are found in the Transactions for 1668 and 1670.

83. *Sir Robert Moray** (–1673). Moray doubts the supposition that the increase of tides from neaps to spring exactly follows the law of sines. He points out that the irregularities in the time required by the moon in going from new to full, or *vice versa*, will preclude any exact law in the matter.

He proposes what was probably the first box gauge; i. e., a gauge with a float.†

Among other things, he recommends observing the height of the tide and the velocity of the current every 15 minutes; the exact heights of high and low water; the direction and velocity of the wind; the state of the weather, including barometric readings. He would have the series continued for some months, or rather, years.

Samuel Colepresse. From observations made at and near Plymouth in 1667, Colepresse arrives at the following conclusions:‡

The diurnal tides, from about the latter end of March till the latter end of September, are about a foot higher in the evening than in the morning, that is, in every tide that happens after noon and before midnight. On the contrary, the morning tides, from Michaelmas till Lady-day in March again, are constantly higher by about a foot than those that happen in the evening. And this proportion holds in both, in the intermediate times of increase and decrease. The highest monthly spring tide is always the third tide after the new or full moon, if a cross wind do not oppose the water, as the north-east or north-west usually does. The highest springs make the lowest ebbs. The water neither flows nor ebbs alike in respect of equal degrees; but its velocity increases with the tide, till just at mid-water or half flood, at which time the velocity is strongest, and so decreases proportionably till high water or full sea. As appears by the following scheme, collected from observations made at several times and places; which, though taken at Plymouth Haven, where even the water usually rises about sixteen feet, yet it may indifferently serve for other places, where it may rise as many fathoms, or not so high, by a proportional addition or subtraction.

Time of flowing.	Height.		Time of ebbing.	Height.	
1 hr.	1 feet	6 inch.	1 hr.	1 feet	6 inch.
2	2	6	2	2	6
3	4	0	3	4	0
4	4	0	4	4	0
5	2	6	5	2	6
6	1	6	6	1	6

It will be seen that Colepresse was familiar with the diurnal inequality in the height of high water and knew that if for one half of the year higher high water fall in the evening, say, for the other half it would fall in the morning.

[If we use the letters $\frac{a}{b}$ to mark such lunitidal intervals as give a higher high or lower low water when applied to $\frac{\text{an upper north or lower south}}{\text{a lower north or an upper south}}$ transit of the moon, then the truth or falsity of statements like the above may be ascertained by the following rule which is an obvious consequence of the equilibrium theory of tides:

When the interval is marked *a* the great tide is nearer to $\frac{\text{noon} + \text{interval}}{\text{midnight} + \text{interval}}$ o'clock in the $\frac{\text{summer}}{\text{winter}}$ half-year than to $\frac{\text{midnight} + \text{interval}}{\text{noon} + \text{interval}}$ o'clock.

When the interval is marked *b* the reverse is true.

By great tide is here meant the higher high or the lower low water.]

His table shows the rise and fall for each lunar hour reckoned from the times of low water and of high water, the tide having a range of 16 feet.

Henry Philips§ draws a circle whose circumference is divided into 12 equal parts representing the 12 hours of transit of the moon. The diameter upon which these points are projected has written upon it the values of the interval which correspond to the several hours of transit. These are got, not from observations alone, but by assuming that the variation in the interval follows the law of sines so that, the diameter's length representing the extreme observed variation, equal

* "Considerations and Inquiries concerning Tides," Phil. Trans. (1666) [Vol. I, pp. 298-301]; Abr., Vol. I, pp. 113-115.

† Lalande, Astronomie, Vol. IV, p. 36, describes a somewhat elaborate box gauge proposed in about 1675.

‡ "Tides observed at Plymouth," Phil. Trans. (1668) [Vol. II, pp. 632-634]; Abr., Vol. I, p. 227.

§ "Time of the Tides observed at London," Phil. Trans. (1668) [Vol. III, pp. 656-659]; Abr. Vol. I, pp. 239, 240.

divisions upon it represent equal times.* He is wrong in assuming that the longest interval corresponds to the zero or twelfth hour of transit and the shortest to the sixth. This was pointed out by Flamsteed, the first astronomer royal, about 15 years later. He says that Philips "was certainly the first that brought the inequality to a rule."† Philips says that by changing the values written upon the diameter, the same construction is applicable elsewhere.

Capt. Samuel Sturmy. From the extract given below describing the tides in Hong-Road, near Bristol, it will be seen that Sturmy as well as Colepresse was familiar with the phenomenon of high-water diurnal inequality, and knew that if for one half of the year the higher high water fall in the evening, say, for the other half, it would fall in the morning; he knew, moreover, that this inequality is independent of the springs and neaps.‡

Concerning our diurnal tides, we observe, that from about the latter end of March till the latter end of September, they are about 1 foot 3 inches higher in the evening than in the morning; that is, when high water happens after the sun is past the meridian, or in the tides between noon and midnight: But from Michaelmas till Lady-day we find the contrary, the day tides being in that season higher by 15 inches than the night tides, or the tides between midnight and noon. And this proportion holds in both, after the gradual increase of the tides from neap to the highest spring, and the like decrease of their height till neap again. As for the highest menstrual spring-tide, it is always the third after the full moon or change-day, if it be not kept back by north-east winds.

Sturmy gives a table, similar to that given by Colepresse, showing the rise and fall in Hong-Road, near Bristol. He then describes the "boar" in the Severn.

In the Severn, 20 miles above Bristol, near Newnham, 160 miles from the river's mouth (Lundy,) the head of the flood, in spring-tides rises in height like a wall near nine feet high, and so runs for many miles together, covering at once all the shoals which were dry before; at which time all vessels that lie in the way of these head tides, or boars, as they are popularly called, are commonly overset, or carried upon the banks; and the head of the tide being past, such vessels are left dry again. It flows there but 2 hours and 18 feet in height, and it ebbs ten hours. The reason of the said boar is doubtless the straightening and shoaling of the river in that place, it being there but half a mile broad; as it is but 20 perches over three miles higher, running tapering to Gloucester.

84. *Joseph Childrey.* Childrey does not agree with Wallis in the mistaken notion that the highest tides happen about Allhallowtide and Candlemas. He says that English seamen, as a rule, believe them to occur near the equinoxes. He thinks that Wallis's November high tides must have been due to freshets. After giving numerous instances of remarkably high tides when the moon was in perigee, from the year 1250 to 1669, he says:§

Further, what inclines me to believe that the perigæosis of the moon is of some concernment in this matter, is, because it is a maxim among our Kentish seamen, that they never have two running spring tides (as they call them) together, but that the next spring tide, after a high running spring, is proportionably weak and slack; which, if true, is very correspondent to my opinion, because, if the moon be in perigæo at this spring tide, she will be in apogæo at the next.

But I conceive the best touchstone to prove the soundness of my opinion is, to have it observed, whether those neap-tides be not apparently higher that happen at the moon's being in perigæo either at the first or last quarter: because it is a received and demonstrable truth in astronomy, that the moon being in perigæo at either quarter, comes then nearer the earth than when it is in perigæo at the change or full.

Assuming the tides to be due to the rotary motions of earth and moon (i. e., Wallis's theory), Childrey evidently believes that the parallax inequality occurs with the neap tides as well as with the spring; and, moreover, that such inequality is affected by the moon's phase. This virtually infers an inequality in the parallax effect, whose period is the synodic period of the anomalistic month and the half synodical month, or about one-half of 412 days; this is the inequality due to the evection. Its effect, however, is quite the reverse of what he surmises it to be,‖ owing to the wrong astronomical notion which he entertains, and which was generally received before it was supplanted by the hypothesis of Horrox.¶ That is, the parallax inequality in height is really increased in the syzygies and diminished in the quadratures.**

---

* See Part III, §§ 2, 47, and Table 24.

† Phil. Trans. (1682 or 1683) [Vol. XIII, pp. 10–13]; Abr. Vol. 2, pp. 555–557.

‡ "Tides observed in Hong-Road, four Miles from Bristol." Phil. Trans. (1668) [Vol. III, pp, 813–817]; Abr., Vol. I, pp. 290, 291.

§ "Animadversions on Dr. Wallis's Hypothesis about the Flux and Reflux of the Sea." Phil. Trans. (1670) [Vol. V, pp. 2061–2068]; Abr. Vol. I, pp. 516–520.

‖ See Tables 1 and 34.

¶ See Whewell's History of Inductive Sciences, Vol. I, p. 457. Also Flamsteed's letter, Phil. Trans. (1675) [Vol. X, pp. 368–370]; Abr., Vol. II, pp. 220, 221. Also Godfray, Lunar Theory (1885), p. 113.

** See Tables 2 and 34.

John Flamsteed (1646–1719). Flamsteed published (in the Philosophical Transactions) a tide table giving the times of high water at London Bridge for the year 1683, and continued its publication for several succeeding years.

He corrects Mr. Phillips's table from observations which he caused to be made.

In his description of the 1683 table he says:*

Hitherto our tide-tables have only showed the time of that one high-water which next follows the moon's southing; but in this new table I have given the times of both. . . .

This table may be reduced and made to serve for any other port of his majesty's dominions and neighbouring countries, by only subtracting or adding so much time to the high-waters noted in it, as the high-water observed in the said place shall be found to precede or follow the time of the high-water the same day. For by such accounts as I have met with and received of the tides in remote places, I find there is every where, about England, the same difference between the spring and neap-tides, that is here observed in the river Thames.

I could easily have made and given you a table for this reduction, if I dare have relied on the account our mariners give of the tides in other ports; but I find their opinions different, except where they have copied from each other in their calendars; by reason of the afore-mentioned difference between the times of the moon's southings and the true high-waters; for which reason I forbear it, till further experience shall have informed us better.

About a year later Flamsteed published a table of tidal differences to be applied to the London tides.† This is probably the earliest known table of tidal differences.

85. *Dr. Edmund Halley* (1657–1742).

Halley notes the connection of the moon's declination and the tides at Tonquin, which Francis Davenport's observations had shown to be diurnal in their character. But the law which he proposes for ascertaining the height of high or low water for various longitudes of the moon, is obviously incorrect. He says:‡

The effect of the moon on the waters in the production of the tides in the port of Tonquin is the more surprising, as it seems different in all its circumstances from the general rule, whereby the motion of the sea is regulated in all other parts of the world that I have yet heard of. For first, each flux is of about 12 hours duration, and its correspondent reflux as long; so that there is but one high water in 24 hours. Then there are in each month two intermissions of the tides, about 14 days asunder, when there is no sensible flood or rising of the waters to be observed, but the sea is in a manner stagnant. Thirdly, that the increase of the water has its 14 days period between the aforesaid intermissions; and at 7 days end makes the highest tides; from which time the water again gradually abates, and the flood is weaker till it comes to a stagnation, both increase and decrease observing the same rule in being exceedingly slow in their beginning and end, and swift in the middle. Lastly, and which is most strange, the rising moon in the one half of each month makes high water, and the setting moon in the other half.

These particulars considered, together with the tables showing the days of the water's stagnation in each month, gave me a light into the secret of this strange appearance, so as to be able to bring the hitherto unaccountable irregularity of these tides to a certain rule. And first it appears that the intermissions of the tides happen nearly on those days that the moon enters the signs of Aries and Libra, or passes the equinoctial, which divides the moon's course nearly into two equal parts, as well as the sun's; and from hence it follows, that the tropical moons in ♋ and ♑, are those which occasion the greatest flux and reflux.§ It also appears that the moon in northern signs brings in the flood, whilst she is above the horizon, so as to make high water at her setting, and on the contrary, that whilst she is in southern signs, it flows all the time the moon is below the horizon, and so makes high water at her rising. But it is to be observed, that though the moon pass swiftly from south to north when she is in or near ♈, and from north to south when in or near ♎, yet the motion of the sea, which is the cause of this tide, is scarcely discernible for 3 or 4 days, when the moon passes the said equinoctial points; whence it appears, that though the declination of the moon be that whereby these tides are regulated, yet the increase and decrease of the water is by no means proportionate to that of her declination, that changing swiftly, where the increase of the water is observed to be most slow. It seems therefore, and I propose it as a probable conjecture, that the increase of the waters should be always proportionate to the versed sines of the doubled distances of the moon from the equinoctial points.

In the same discussion he suggests the existence of an inequality in the "spring range" (i. e., great tropic range) dependent upon the obliquity of the lunar orbit to the plane of the earth's equator.‖ He says:

There is yet another thing well worth inquiry, viz. seeing that this motion of the sea is more or less, as the moon is farther from or nearer to the equinoctial, it is not unlikely that some years may have much higher spring tides

* "A correct Tide Table, showing the true Times of the High-waters at London Bridge, to every Day in the Year 1683," Vol. XIII (1682–83) [pp. 10-15]; Abr., Vol. II, pp. 555–557.

† Phil. Trans. (1683–84) [Vol. XIV, pp. 458–462]; Abr., Vol. III, p. 3.

‡ "A Theory of the Tides at the Bar of Tonquin." Phil. Trans. (1684) [Vol. XIV, pp. 685–688]; Abr., Vol. III, pp. 67–69.

§ See under Strabo; also § 7.

‖ See Part III, §§ 48, 49; also Tables 10, 13, 14, and 32.

than others, according to the various obliquity of the moon's orbit to the equinoctial; for when the ascending node is in ♈, as it was anno 1671, and will be anno 1690, the moon in ♋ and ♈ deviates from the equator full 28½°, and but 18½° when the same node is in ♎, as it was anno 1680.

In the year 1697 Halley calls attention to the excellence of Newton's Principia in explaining the cause and phenomena of the tides.* He notes that the moon's disturbing force would cause the spherical surface of the ocean to become spheroidal; that sun and moon have similar effects; that spring tides correspond to new and full moon, and neap tides to the quarters; that equinoctial spring tides are, *cæteris paribus*, the highest, but that the nearness of the sun in the winter displaces them somewhat, making them in February and October; that there should generally be a diurnal inequality; that tidal inequalities should have an age; and that even diurnal tides, like those at Tonquin, may be accounted for.

86. The preceding pages show the diversity of views concerning the cause of tides and tidal currents entertained before the law of gravitation was established. Among those described or alluded to are: The discharging of rivers into the sea (Timæus); winds, set up by the sun or moon, striking the water (Aristotle, Heraclides, Seleucus); bodily oscillations of large bodies of water within the earth (Plato); the surface of the sea being on a slope (Eratosthenes); vapors surrounding the moon (Strabo); submarine caverns; the breathing of an earth animal (Apollonius); water increasing with the waxing moon (Pliny); sympathy whereby the moon attracts moist bodies; rarefaction of the water caused by the moon or sun; occult qualities of the moon; westward diurnal motion of the *primum mobile;* the vortex theory (Descartes); a whirlpool off the coast of Norway; the absolute motion of a fixed point on the earth's surface not being uniform at all times, thereby setting up a variable centrifugal force (Galileo, Wallis); and the heat of the sun.

Some of the other notions which have been advanced to explain the phenomenon of the tide are: Unequal depths causing diverse densities in the water; submarine heat, fermentations, and vapors; a libration of the earth; and the force of rays of light from the sun and moon.

More particulars along this line are given by Riccioli, Lalande, Peschel, Ruge, and Günther.

* "The true Theory of the Tides, extracted from Mr. Isaac Newton's treatise, entitled Philosophiæ Naturalis Principia Mathematica; being a Discourse presented with that Book to the late King James." Phil. Trans. (1697) [Vol. XIX pp. 445 et seq.]; Abr., Vol. IV, pp. 142–149.

CHAPTER VI.

NEWTON TO LAPLACE.

Sir Isaac Newton (1642–1727).

87. Before referring to Newton's work upon tides it may be well to state some of the consequences of the law of gravitation when applied to certain astronomical questions which have a direct bearing upon the subject. In Proposition LXVI, Book I, of the *Principia*, the disturbing force of a third body is considered. Applying his results to the case of the moon as disturbed by the sun we obtain the following:

The moon's motion is by the action of the sun retarded while in the first and third quadrants, but accelerated while in the second and fourth (Cor. 2).

Cæteris paribus, the moon moves more swiftly in the syzygies than in the quadratures (Cor. 3).

Cæteris paribus, the moon is nearer to the earth in the syzygies than in the quadratures (Cor. 5).

The line of apsides advances in the long run although its motion is at times retrograde. It advances most rapidly when the line of apsides is in syzygy and most slowly when in quadrature (Cor. 5, 7).

The eccentricity of the moon's orbit will be the greatest when the apsides are in the syzygies, and least when in the quadratures (Cor. 9).

The nodes being either stationary or having a retrograde motion, will for any revolution of the moon be carried backwards (Cor. 11).

The disturbing force of the sun is a little greater at conjunction than at opposition (Cor. 12).

The disturbing force of the sun is, very nearly, inversely as the cube of its distance from the earth's center (Cor. 14).

The action of the sun upon the redundant matter in the equatorial regions of the earth will cause the equinoxes to be carried backwards (Cor. 20).

In Proposition LXXI, Book I, it is shown that the attraction of a spherical shell upon an external point is the same as if all matter of the shell were collected at its center.

From the construction given in Proposition XXV, Book III, it follows (considering the great distance of the sun) that at the quadratures the disturbing force of the sun upon the moon is directed towards the earth, but at the syzygies the disturbing force is twice as great and is directed from the earth.

In Proposition XXVIII, Book III, it is found that the moon's distance from the earth in the syzygies is to its distance in the quadratures (setting aside the consideration of the eccentricity) as 69 to 70, very nearly.

In Proposition XXXII, Book III, the mean motion of the lunar nodes is $19^\circ\ 18'\ 1''\ 23'''$ per sidereal year; and in Proposition XXXIX the precession of the equinoxes due to both moon and sun is very nearly $50''$.

Newton regards the tide in three different ways:

First. Book I, Prop. LXVI, Cors. 18, 19, a kinetic theory or hypothesis. The motion of a particle of water revolving with the earth about a fixed axis is disturbed by an extraneous body, just as the moon revolving about the earth is disturbed by the sun causing the inequality of variation. This necessitates low water and maximum eastward velocity (with respect to the fixed surface of the earth) at the time of upper or lower transit; also high water and maximum westward velocity at moonrise or moonset. For, supposing an analogy to the moon's variation, the particle becomes a little nearer to the earth's center, and moves a little more rapidly (in space) as the body nears meridian. He makes no attempt to apply this theory to observed tides.*

* Prof. J. Challis, in "A mathematical theory of tides," Phil. Mag., Vol. 39 (1870), pp. 31, 32, does not believe that this hypothesis of Newton's necessitates low water at the times of transits, but rather high water. Challis erroneously assumes that the time of the tide depends upon the vertical forces instead of the horizontal. Cf. § 41.

Second. Cor. 20. His next hypothesis is that (disregarding friction, etc.) high water occurs when the disturbing *vertical* force is zero, instead of when its value becomes a maximum, as in the uncorrected equilibrium theory. This occurs about three hours before or after the transit of the tidal body. He assumes that friction may retard the times of the tides somewhat and that "the motion of ascent or descent impressed by these (astronomical) forces may by the *vis insita* of the water continue a little longer or be stopped a little sooner by impediments in its channel."

Third. Book III, Prop. XXXVI, an equilibrium theory or hypothesis, in which the density of the earth is that of water.

88. In Proposition XXIV, Book III, Newton treats of the principal phenomena pertaining to tides. He says:

"By Cors. 19 and 20, Prop. LXVI, Book I, it appears that the waters of the sea ought twice to rise and twice to fall every day, as well lunar as solar; and that the greatest height of the waters in the open and deep seas ought to follow the appulse of the luminaries to the meridian of the place by a less interval than 6 hours; as happens in all that eastern tract of the *Atlantic* and *Æthiopic* seas between *France* and the *Cape of Good Hope;* and on the coasts of *Chili* and *Peru* in the *South Sea;* * in all which shores the flood falls out about the second, third, or fourth hour, unless where the motion propagated from the deep ocean is by the shallowness of the channels, through which it passes to some particular places, retarded to the fifth, sixth, or seventh hour, and even later. The hours I reckon from the appulse of each luminary to the meridian of the place, as well under as above the horizon; and by the hours of the lunar day I understand the 24th parts of that time which the moon, by its apparent diurnal motion, employs to come about again to the meridian of the place which it left the day before. The force of the sun or moon in raising the sea is greatest in the appulse of the luminary to the meridian of the place; but the force impressed upon the sea at that time continues a little while after the impression, and is afterwards increased by a new though less force still acting upon it. This makes the sea rise higher and higher, till this new force becoming too weak to raise it any more, the sea rises to its greatest height. And this will come to pass, perhaps, in one or two hours, but more frequently near the shores in about three hours, or even more, where the sea is shallow.

The two luminaries excite two motions, which will not appear distinctly, but between them will arise one mixed motion compounded out of both. In the conjunction or opposition of the luminaries their forces will be conjoined, and bring on the greatest flood and ebb. In the quadratures the sun will raise the waters which the moon depresses, and depress the waters which the moon raises, and from the difference of their forces the smallest of all tides will follow. And because (as experience tells us) the force of the moon is greater than that of the sun, the greatest height of the waters will happen about the third lunar hour. Out of the syzygies and quadratures, the greatest tide, which by the single force of the moon ought to fall out at the third lunar hour, and by the single force of the sun at the third solar hour, by the compounded forces of both must fall out in an intermediate time that approaches nearer to the third hour of the moon than to that of the sun. And, therefore, while the moon is passing from the syzygies to the quadratures, during which time the 3d hour of the sun precedes the 3d hour of the moon, the greatest height of the waters will also precede the 3d hour of the moon, and that, by the greatest interval, a little after the octants of the moon; and, by like intervals, the greatest tide will follow the 3d lunar hour, while the moon is passing from the quadratures to the syzygies. Thus it happens in the open sea; for in the mouths of rivers the greater tides come later to their height.

But the effects of the luminaries depend upon their distances from the earth; for when they are less distant, their effects are greater, and when more distant, their effects are less, and that in the triplicate proportion of their apparent diameter. Therefore it is that the sun, in the winter time, being then in its perigee, has a greater effect, and makes the tides in the syzygies something greater, and those in the quadratures something less than in the summer season; and every month the moon, while in the perigee, raises greater tides than at the distance of 15 days before or after, when it is in its apogee. Whence it comes to pass that two highest tides do not follow one the other in two immediately succeeding syzygies.

The effect of either luminary doth likewise depend upon its declination or distance from the equator; for if the luminary was placed at the pole, it would constantly attract all the parts of the waters without any intension or remission of its action, and could cause no reciprocation of motion. And, therefore, as the luminaries decline from the equator toward either pole, they will, by degrees, lose their force, and on this account will excite lesser tides in the solstitial than in the equinoctial syzygies. But in the solstitial quadratures they will raise greater tides than in the quadratures about the equinoxes; because the force of the moon, then situated in the equator, most exceeds the force of the sun. Therefore the greatest tides fall out in those syzygies, and the least in those quadratures, which happen about the times of both equinoxes: and the greatest tide in the syzygies is always succeeded by the least tide in the quadratures, as we find by experience. But, because the sun is less distant from the earth in winter than in summer, it comes to pass that the greatest and least tides more frequently appear before than after the vernal equinox, and more frequently after than before the autumnal.

Moreover, the effects of the luminaries depend upon the latitudes of places.†

---

* To ascertain the amount of truth in these statements, consult a cotidal chart. The cotidal hour diminished by the west longitude of the place (in hours) will give its lunitidal interval (in lunar hours).

† Motte's translation, 1st Am. ed.

He then assumes, without proof, that the surface of the sea takes the form of a spheroid whose axis points at the position of the moon three hours before the given time. He shows that the greater high water should follow $\begin{matrix}\text{an upper north}\\ \text{a lower south}\end{matrix}$ transit for places in north latitude, and *vice versa* for places in south latitude. This, in a general way, explains the diurnal inequality. He adds:

And the greatest difference of the floods will fall out about the times of the solstices; especially if the ascending node of the moon is about the first of Aries. So it is found by experience that the morning tides in winter exceed those of the evening, and the evening tides in summer exceed those of the morning; at *Plymouth* by the height of one foot, but at *Bristol* by the height of 15 inches, according to the observations of *Colepress* and *Sturmy*.

This explains in a satisfactory manner the annual and nodal variation in the diurnal inequality.*

Continuing, Newton gives an explanation of the smallness of the diurnal inequality which seems to have passed unquestioned until the subject was investigated by Laplace:†

But the motions which we have been describing suffer some alteration from that force of reciprocation, which the waters, being once moved, retain a little while *by their vis insita*. Whence it comes to pass that the tides may continue for some time, though the actions of the luminaries should cease. This power of retaining the impressed motion lessens the difference of the alternate tides, and makes those tides which immediately succeed after the syzygies greater, and those which follow next after the quadratures less. And hence it is that the alternate tides at *Plymouth* and *Bristol* do not differ much more one from the other than by the height of a foot or 15 inches, and that the greatest tides of all at those ports are not the first but the third after the syzygies. And, besides, all the motions are retarded in their passage through shallow channels, so that the greatest tides of all, in some straits and mouths of rivers, are the fourth or even the fifth after the syzygies.

Farther, it may happen that the tide may be propagated from the ocean through different channels towards the same port, and may pass quicker through some channels than through others; in which case the same tide, divided into two or more succeeding one another, may compound new motions of different kinds. Let us suppose two equal tides flowing towards the same port from different places, the one preceding the other by six hours; and suppose the first tide to happen at the third hour of the appulse of the moon to the meridian of the port. If the moon at the time of the appulse to the meridian was in the equator, every six hours alternately there would arise equal floods, which, meeting with as many equal ebbs, would so balance one the other, that for that day, the water would stagnate and remain quiet. If the moon then declined from the equator, the tides in the ocean would be alternately greater and less, as was said; and from thence two greater and two lesser tides would be alternately propagated towards that port. But the two greater floods would make the greatest height of the waters to fall out in the middle time betwixt both; and the greater and lesser floods would make the waters to rise to a mean height in the middle time between them, and in the middle time between the two lesser floods the waters would rise to their least height. Thus in the space of 24 hours the waters would come, not twice, as commonly, but once only to their greatest, and once only to their least height; and their greatest height, if the moon declined toward the elevated pole, would happen at the 6th or 30th hour after the appulse of the moon to the meridian; and when the moon changed its declination, this flood would be changed into an ebb. An example of all which Dr. *Halley* has given us, from the observations of seamen in the port of *Batsham*, in the kingdom of *Tunquin*, in the latitude of 20° 50′ north. In that port, on the day which follows after the passage of the moon over the equator, the waters stagnate: when the moon declines to the north, they begin to flow and ebb, not twice, as in other ports, but once only every day: and the flood happens at the setting, and the greatest ebb at the rising of the moon. This tide increases with the declination of the moon till the 7th or 8th day; then for the 7 or 8 days following it decreases at the same rate as it had increased before, and ceases when the moon changes its declination, crossing over the equator to the south. After which the flood is immediately changed into an ebb; and thenceforth the ebb happens at the setting and the flood at the rising of the moon; till the moon, again passing the equator, changes its declination. There are two inlets to this port and the neighboring channels, one from the seas of *China*, between the continent and the island of *Leuconia;* the other from the *Indian* sea, between the continent and the island of *Borneo*. But whether there be really two tides propagated through the said channels, one from the *Indian* sea in the space of 12 hours, and one from the sea of *China* in the space of 6 hours, which therefore happening at the 3d and 9th lunar hours, by being compounded together, produce those motions; or whether there be any other circumstances in the state of those seas, I leave to be determined by observations on the neighbouring shores.

Thus I have explained the causes of the motions of the moon and of the sea. Now it is fit to subjoin something concerning the quantity of those motions.

In the next proposition,‡ it is shown that the disturbing force of the sun upon the moon at quadrature is the 1/638092·6 part of the force of gravity at the earth's surface, this being one half its value at syzygy.

---

* See Table 32.

† Cf. Wallis, Phil. Trans. (1666) [p. 275]; Abr. Vol. I, p. 96: "Though the next tide have not the same cause also, the impetus contracted will have influence upon the next tide."

‡ Bk. III, Prop. XXV.

89. Proposition XXXVI, Book III, resumes the question of the tides, and begins by passing from the sun's disturbing force upon the moon to the force tending to move the sea. This is the first attempt at a quantitive determination of the tidal forces and constitutes an important landmark in the development of the subject. He uses the sun rather than the moon because the ratio of the mass of the moon to that of the earth was then an unknown quantity.

But, descending to the surface of the earth, these forces are diminished in proportion of the distances from the centre of the earth, that is, in the proportion of 60½ to 1; and therefore the former force on the earth's surface is to the force of gravity as 1 to 38 604 600;* and by this force the sea is depressed in such places as are 90 degrees distant from the sun. But by the other force, which is twice as great, the sea is raised not only in the places directly under the sun, but in those also which are directly opposed to it;† and the sum of these forces is to the force of gravity as 1 to 12 868 200.‡ And because the same force excites the same motion, whether it depresses the waters in those places which are 90 degrees distant from the sun, or raises them in the places which are directly under and directly opposed to the sun, the aforesaid sum will be the total force of the sun to disturb the sea, and will have the same effect as if the whole was employed in raising the sea in the places directly under and directly opposed to the sun, and did not act at all in the places which are 90 degrees removed from the sun.§

And this is the force of the sun to disturb the sea in any given place, where the sun is at the same time both vertical, and in its mean distance from the earth. In other positions of the sun, its force to raise the sea is as the versed sine of double its altitude above the horizon of the place directly,‖ and the cube of the distance from the earth reciprocally.

Cor. Since the centrifugal force of the parts of the earth, arising from the earth's diurnal motion, which is to the force of gravity as 1 to 289, raises the waters under the equator to a height exceeding that under the poles by 85 472 *Paris* feet,¶ as above, in Prop. XIX, the force of the sun, which we have now shewed to be to the force of gravity as 1 to 12 868 200, and therefore is to that centrifugal force as 289 to 12 868 200, or as 1 to 44 527, will be able to raise the waters in the places directly under and directly opposed to the sun to a height exceeding that in the places which are 90 degrees removed from the sun only by one *Paris* foot and $11\frac{1}{10}$ inches; for this measure is to the measure of 85 472 feet as 1 to 44 527.

The next proposition, entitled "To find the force of the moon to move the sea," and in which further quantitive results are obtained, is as follows:

The force of the moon to move the sea is to be deduced from its proportion to the force of the sun, and this proportion is to be collected from the proportion of the motions of the sea, which are the effects of those forces. Before the mouth of the river *Avon*, three miles below *Bristol*, the height of the ascent of the water in the vernal and autumnal syzygies of the luminaries (by the observations of *Samuel Sturmy*) amounts to about 45 feet, but in the quadratures to 25 only. The former of those heights arises from the sum of the aforesaid forces, the latter from their difference. If, therefore, S and L are supposed to represent respectively the forces of the sun and moon while they are in the equator, as well as in their mean distances from the earth, we shall have L + S to L − S as 45 to 25, or as 9 to 5.

At *Plymouth* (by the observations of *Samuel Colepress*) the tide in its mean height rises to about 16 feet, and in the spring and autumn the height thereof in the syzygies may exceed that in the quadratures by more than 7 or 8 feet. Suppose the greatest difference of those heights to be 9 feet, and L + S will be to L − S as $20\frac{1}{2}$ to $11\frac{1}{2}$, or as 41 to 23; a proportion that agrees well enough with the former. But because of the great tide at *Bristol*, we are rather to depend upon the observations of *Sturmy;* and, therefore, till we procure something that is more certain, we shall use the proportion of 9 to 5.

But because of the reciprocal motions of the waters, the greatest tides do not happen at the times of the syzygies of the luminaries, but, as we have said before, are the third in order after the syzygies; or (reckoning from the syzygies) follow next after the third appulse of the moon to the meridian of the place after the syzygies; or, rather (as *Sturmy* observes) are the third after the day of the new or full moon, or rather nearly after the twelfth hour from the new or full moon, and therefore fall nearly upon the forty-third hour after the new or full of the moon. But in this port they fall out about the seventh hour after the appulse of the moon to the meridian of the place; and therefore follow next after the appulse of the moon to the meridian, when the moon is distant from the sun, or from opposition with the sun by about 18 or 19 degrees *in consequentia*. So the summer and winter seasons come not to their height in the solstices themselves, but when the sun is advanced beyond the solstices by about a tenth part of its whole course, that is, by about 36 or 37 degrees. In like manner, the greatest tide is raised after the appulse of the moon to the meridian of the place, when the moon has passed by the sun, *or the opposition thereof*, by about the tenth part of the whole motion from *one greatest* tide to *the next following greatest* tide. Suppose that distance about $18\frac{1}{2}$ degrees; and the sun's force in this distance of the moon from the syzygies and quadratures will be of less moment to augment and diminish that part of the motion of the sea which proceeds from the motion of the moon than in the

---

*38 604 600 = 638 092·6 × 60½.

† Newton here substitutes the simple equilibrium hypothesis for the one previously entertained.

‡ 12 868 200 = 38 604 600 ÷ 3.

§ I. e., this force corresponds to the range of solar tide.

‖ The sun is supposed to move in the plane of the equator and the observer to be located upon the equator. See note to § 93.

¶ 1 Paris foot = ⅛ toise = 1·06575 feet = 0·325 metre.

syzygies and quadratures themselves in the proportion of the radius to the co-sine of double this distance, or of an angle of 37 degrees; that is, in proportion of 10 000 000 to 7 986 355; and, therefore, in the preceding analogy, in place of S we must put 0·7986355S.

But farther; the force of the moon in the quadratures must be diminished, on account of its declination from the equator; for the moon in those quadratures, or rather in 18½ degrees past the quadratures, declines from the equator by about 23° 13′; and the force of either luminary to move the sea is diminished as it declines from the equator nearly in the duplicate proportion of the co-sine of the declination; and therefore the force of the moon in those quadratures is only 0·8570327L; whence we have L + 0·7986355S to 0·8570327L — 0·7986355S as 9 to 5.*

Farther yet; the diameters of the orbit in which the moon should move, setting aside the consideration of eccentricity, are one to the other as 69 to 70; and therefore the moon's distance from the earth in the syzygies is to its distance in the quadratures, *cæteris paribus*, as 69 to 70; and its distances, when 18½ degrees advanced beyond the syzygies, where the greatest tide was excited, and when 18½ degrees passed by the quadratures, where the least tide was produced, are to its mean distance as 69·098747 and 69.897345 to 69½. But the force of the moon to move the sea is in the reciprocal triplicate proportion of its distance; and therefore its forces, in the greatest and least of those distances, are to its force in its mean distance as 0·9830427 and 1·017522 to 1. From whence we have 1·017522L × 0·7986355S to 0·9830427 × 0·8570327L — 0·7986355S as 9 to 5; and S to L as 1 to 4·4815. Wherefore since the force of the sun is to the force of gravity as 1 to 12 868 200, the moon's force will be to the force of gravity as 1 to 2 871 400.

Cor. 1. Since the waters excited by the sun's force rise to the height of a foot and 11$\frac{1}{17}$ inches, the moon's force will raise the same to the height of 8 feet and 7$\frac{2}{17}$ inches; and the joint forces of both will raise the same to the height of 10½ feet; and when the moon is in its perigee to the height of 12½ feet, and more, especially when the wind sets the same way as the tide. And a force of that quantity is abundantly sufficient to excite all the motions of the sea, and agrees well with the proportion of those motions; for in such seas as lie free and open from east to west, as in the *Pacific* sea, and in those tracts of the *Atlantic* and *Ethiopic* seas which lie without the tropics, the waters commonly rise to 6, 9, 12, or 15 feet; but in the *Pacific* sea, which is of a greater depth, as well as of a larger extent, the tides are said to be greater than in the *Atlantic* and *Ethiopic* seas; for to have a full tide raised, an extent of sea from east to west is required of no less than 90 degrees. In the *Ethiopic* sea, the waters rise to a less height within the tropics than in the temperate zones, because of the narrowness of the sea between *Africa* and the southern parts of *America*. In the middle of the open sea the waters cannot rise without falling together, and at the same time, upon both the eastern and western shores, when, notwithstanding, in our narrow seas, they ought to fall on those shores by alternate turns; upon which account there is commonly but a small flood and ebb in such islands as lie far distant from the continent. On the contrary, in some ports, where to fill and empty the bays alternately the waters are with great violence forced in and out through shallow channels, the flood and ebb must be greater than ordinary; as at *Plymouth* and *Chepstow Bridge* in *England*, at the mountains of *St. Michael*, and the town of *Auranches*, in *Normandy*, and at *Cambaia* and *Pegu* in the *East Indies*. In these places the sea is hurried in and out with such violence, as sometimes to lay the shores under water, sometimes to leave them dry for many miles. Nor is this force of the influx and efflux to be broke till it has raised and depressed the waters to 30, 40, or 50 feet and above. And a like account is to be given of long and shallow channels or straits, such as the *Magellanic* straits, and those channels which environ *England*. The tide in such ports and straits, by the violence of the influx and efflux, is augmented above measure. But on such shores as lie toward the deep and open sea with a steep descent, where the waters may freely rise and fall without that precipitation of influx and efflux, the proportion of the tides agrees with the forces of the sun and moon.

Cor. 2. Since the moon's force to move the sea is to the force of gravity as 1 to 2 871 400, it is evident that this force is far less than to appear sensibly in statical or hydrostatical experiments, or even in those of pendulums. It is in the tides only that this force shews itself by any sensible effect.

Cor. 3. Because the force of the moon to move the sea is to the like force of the sun as 4·4815 to 1, and those forces (by Cor. 14, Prop. LXVI, Book 1) are as the densities of the bodies of the sun and moon and the cubes of their apparent diameters conjunctly, the density of the moon will be to the density of the sun as 4·4815 to 1 directly, and the cube of the moon's diameter to the cube of the sun's diameter inversely; that is (seeing the mean apparent diameters of the moon and sun are 31′ 16½″ and 32′ 12″), as 4 891 to 1 000. But the density of the sun was to the density of the earth as 1 000 to 4 000; and therefore the density of the moon is to the density of the earth as 4 891 to 4 000, or as 11 to 9. Therefore the body of the moon is more dense and more earthly than the earth itself.

Cor. 4. And since the true diameter of the moon (from the observations of astronomers) is to the true diameter of the earth as 100 to 365, the mass of matter in the moon will be to the mass of matter in the earth as 1 to 39·788.

90. In "The system of the world" the tides are discussed somewhat as in the third book. The matter is not arranged in formal propositions, a popular treatment of the subject having been the author's intention at one time.

He here calls attention to the impossibility of the lunitidal interval being of uniform length

---

*Assuming that Newton is, in all cases, dealing with equinoctial spring and neap tides (instead of equinoctial syzygial tides), then equinoctial spring range: equinoctial neap range = L + S : L $\cos^2\delta$ — S = 9 : 5, δ being the moon's declination when at equinoctial quadrature (generally about 23½°). The above assumption seems justified in light of the subsequent parallax corrections; and so Newton's proportion is erroneous in so far as the age of the phase inequality is involved. Cf. Airy, Tides and Waves, Art. 17; Ferrel, Tidal Researches, Introduction, § 5.

across the Atlantic Ocean, because rise in one place necessitates fall in another; also to the fact that "the greatness of the tides depends upon the greatness of the sea."

He imagines a pair of vertical canals, one in the axis of the tidal spheroid and the other perpendicular thereto, both passing through the earth's center. Then, knowing that the whole weight of the water in either canal or leg is proportional to the square of its length, and that the attraction of the earth upon a particle at its surface is 12 868 200 times that of the sun upon the same particle, the square roots of 12 868 200 and 12 868 200 + 1, or 12 868 201, are proportional to the two semiaxes of the tidal spheroid. Their difference thus found is 9, or, more accurately, $9\frac{1}{5}$ Paris inches. This is about two-fifths of the result given in Book III, because the mutual attraction of the disturbed fluid particles is ignored.

He estimates that the moon's tidal force is $5\frac{1}{3}$ that of the sun, instead of 4·4815, as in Cor. 3, Prop. XXXVII, and so the ranges of tides are 9 inches for the sun and 4 feet for the moon. He thinks that the theoretical range of tide may be doubled or trebled because of the reciprocation (oscillatory motion) in the motion of the waters. The mass of the moon here obtained is 1/29, instead of 1/39·788, the result given in the third book.

Daniel Bernoulli (1700–1782).

91. In the year 1738 the Académie des Sciences at Paris proposed the problem of the tides as the subject of a prize essay. The prize was divided, in 1740, among Daniel Bernoulli, professor of anatomy and botany at Basel; Maclaurin, professor of mathematics at Edinburgh; Euler, professor of mathematics at St. Petersburg, and the Jesuit Antoine Cavalleri. The three first mentioned founded their theories upon the principle of universal gravitation, while Cavalleri adopted the Cartesian system of vortices (tourbillons), a system which most philosophers had already abandoned because of Newton's more rational theory. The essays of Bernoulli, Maclaurin, and Euler are to be found in Le Seur and Jacquier's edition of the Principia. They bear the respective titles, "Traité sur le flux et reflux de la mer," "De causa physica fluxus et refluxus maris," and "Inquisitio physica in causam fluxus ac refluxus maris."

Laplace has given a review of the essays of Bernoulli and Euler in the thirteenth book of his Mécanique Céleste, and Ferrel gives a similar review in the introduction to his Tidal Researches.

Each of the three writers begins his essay with some historical remarks on the subject.

92. Bernoulli was the first to develop the equilibrium theory or hypothesis sufficiently far to give it a practical value in the prediction of tides; hence this theory is often associated with his name. He proceeds upon the following suppositions: That for tidal purposes we may assume the undisturbed surface of the earth to be spherical, i. e., we may disregard the ellipticity of the earth's meridian; that the earth is composed of concentric layers, any one of which has a uniform density throughout; that either luminary causes the earth to assume the form of an ellipsoid of revolution whose axis points toward the center of the luminary; that the nucleus of the earth is practically rigid, and is surrounded by a homogeneous sea, shallow in comparison with the radius of the earth.

He determines the ellipticity of the tidal spheroid, and so the range of the tide (due to the sun), by imagining a vertical canal or well, directly under the body, cut to the earth's center, there communicating with a similar opening 90° distant from the first—an artifice employed by Newton in finding the effect of the centrifugal force at the earth's equator. He denotes the range of the solar tide by δ and the lunar tide by δ. Various theoretical values of the ranges are obtained upon assuming different laws for the density of the earth. Upon the assumption that the earth's density is uniformly that of water, Bernoulli finds δ about 23 inches, or Newton's result. He regards this range too small to be consistent with observed tides. That most of his conclusions based on various assumptions as to density are erroneous may be seen upon comparing them with the following obvious considerations: If we give to the earth a certain mass arranged in concentric shells, the height of the tide is independent of the law of change of density along a radius. If, on the other hand, we take for our estimate of the earth's mass, or mean density, a portion of surface material, water for instance, then the mass will, of course, be much affected by the assumed law of increase or decrease of density from the surface toward the center. Consequently any law which assumes the density to decrease from the surface toward the center will give larger tides than upon the assumption of uniform density, and *vice versa* for a law which supposes an increase in density below the surface. Bernoulli reaches conclusions quite opposite to these.

93. In the fifth chapter of his essay Bernoulli finds that the fall of tide from high water is proportional to the square of the sine of the moon's hour angle—the transits of the moon are assumed to occur at the times of high water.* [Of course a similar rule obtains for the height of the tide (surface of the sea) reckoned from low water. To establish these rules, assume an ellipse of small eccentricity, and upon its major and minor axes as diameters describe circles; the departure of the ellipse (along a radius) from either circle which it touches is proportional to the sine of the angle which the radius makes with the one drawn through the point of contact. This may be readily seen upon writing the polar equation of the ellipse referred to its center.]

After observing that the solar and lunar tides may be treated separately, because either produces but a small deformation in the figure of the earth, he gives an expression for the height of the combined tide. This height, when referred to mean sea level, may be written

$$\text{Height of tide} = \tfrac{1}{2}\,\epsilon - \sigma^2\epsilon + \tfrac{1}{2}\,\delta - \rho^2\delta \tag{169}$$

where σ is the sine of the hour angle of the sun and ρ the same for the moon. If m denote the sine of the angle between the sun and the moon, and n the cosine, then

$$\rho = m\sqrt{1-\sigma^2} - n\sigma. \tag{170}$$

From the square of this equation $\rho d\rho$ is readily obtained, σ being the variable. From the differential of the expression for the height, which must be zero at the times of high or low waters,

$$\rho d\rho = -\frac{\epsilon}{\delta}\sigma d\sigma. \tag{171}$$

Equating the two expressions for $\rho d\rho$, we obtain as the value of σ at a high or low water

$$\sigma = \pm\left(\tfrac{1}{2} \pm \frac{A}{2\sqrt{4+A^2}}\right)^{\frac{1}{2}}, \tag{172}$$

where

$$A = \frac{1}{mn}\left[m^2 - n^2 - \frac{\epsilon}{\delta}\right]. \tag{173}$$

The value of ρ is the same as that of σ when A is replaced by B, which quantity is obtained from the expression for A by interchanging ϵ and δ.

Regarding the angle between the sun and moon as variable,

$$\rho = \pm\left(\tfrac{1}{2} \pm \frac{B}{2\sqrt{4+B^2}}\right)^{\frac{1}{2}} \tag{174}$$

becomes a maximum when

$$\frac{dB}{dm} = 0. \tag{175}$$

This gives

$$m = \sqrt{\frac{\epsilon+\delta}{2\delta}} \tag{176}$$

for the sine of the angle between sun and moon when the lunar tide is the most perturbed in time by the solar. The corresponding value of the cosine is

$$n = \sqrt{\frac{\delta-\epsilon}{2\delta}}. \tag{177}$$

This gives to ρ the value

$$\left(\tfrac{1}{2} - \frac{\sqrt{\delta^2-\epsilon^2}}{2\delta}\right)^{\frac{1}{2}}; \tag{178}$$

* This is equivalent to saying that the fall is proportional to the versed sine of twice the moon's hour angle, since $2\sin^2\theta = 1 - \cos 2\theta$; consequently a cosine curve represents the rise and fall of the tide. Cf. § 47.

or approximately,

$$\frac{\sigma}{2\delta} \tag{179}$$

when δ is much larger than σ.

Near the syzygies the lunar tide or tidal force is displaced (in longitude) by an angle whose sine is

$$\frac{\sigma}{\sigma+\delta} \times m; \tag{180}$$

and the solar tide by an angle whose sine is

$$\frac{\delta}{\sigma+\delta} \times m. \tag{181}$$

Near the quadratures the sine of the angle by which the lunar tide is displaced is

$$\frac{\sigma}{\delta-\sigma} \times n. \tag{182}$$

After considering the available evidence, Bernoulli assumes the ratio of the solar to the lunar tide, or σ/δ, to be $\frac{3}{5}$. By aid of the expressions just obtained, he finds that at the syzygies (springs) the tides become later each day, not by 50 minutes, but by 35, and at the quadratures (neaps) by 85 minutes.* He then gives a table showing how much the time of tide departs from the time of the moon's transit because of the sun's action. This seems to be the first table of its kind since the attempts of Philips and Flamsteed already referred to, and which were not based upon the theory of gravitation. The distance between sun and moon is taken to each 10° from 0° to 180°. The intervals as well as the age or *retard* of the tide are each supposed to be zero; the value of σ/δ is assumed to be $\frac{2}{5}$. He computes the angle, whose sine is ρ, from the formula

$$\rho = \pm\left(\tfrac{1}{2} \pm \frac{B}{2\sqrt{4+B^2}}\right)^{\frac{1}{2}}. \tag{183}$$

He then converts this displacement into minutes of time by multiplying the number of degrees by, as it seems, exactly 4.

His second table shows the same quantities as the first, excepting that three distances of the moon—perigean, mean, and apogean—are provided for instead of the mean only; also that the age of the tide is assumed to be 20°, or one and one-half days, instead of zero. This amounts to writing the tabular values in the second table opposite an argument 20° greater than that in the first table. The perigean or apogean values of the departure of the time of tide from the time of transit may be approximately obtained from the values computed for mean distance by multiplying the latter by

$$\frac{\delta}{\text{range of lunar tide at perigee}},$$

or

$$\frac{\delta}{\text{range of lunar tide at apogee}}.$$

Since the range of tide due to either luminary varies inversely as the cube of its distance from the earth,† the perigean, mean, and apogean ranges should have values proportioned to

$$\frac{1}{(0{\cdot}945)^3}, \frac{1}{1^3}, \frac{1}{(1{\cdot}055)^3};$$

or roughly to

$$3,\ 2\tfrac{1}{2},\ 2,$$

the reciprocals of which are proportional to

$$\tfrac{5}{6},\ 1,\ \tfrac{5}{4}.$$

* Table 24 gives for the daily retardation of the tide at the times of spring and neap tides, $50-36\frac{S_2}{M_2}$ minutes and $50+96\frac{S_2}{M_2}$ minutes, respectively; or 36 and 88 minutes if $S_2/M_2=\frac{5}{7}$. On account of the moon's variation, the moon's lagging is not 50 minutes per day, but 51 in syzygy and 49 in quadrature.

† As he demonstrates in Ch. VII, § 7.

These are the factors used by Bernoulli in constructing his second table.

His third table gives the relative value of the height or range of tide for each 10° of distance between sun and moon. Having the values of ρ given in the first table, the corresponding values of σ become known by the formula

$$\rho = m\sqrt{1-\sigma^2} - n\sigma. \tag{184}$$

These values substituted in the expression

$$\tfrac{1}{2}\,\epsilon - \sigma^2\,\epsilon + \tfrac{1}{2}\,\delta - \rho^2\,\delta \tag{185}$$

would give the height of the tide. Bernoulli mentions this fact, but prefers to use a formula for the range of the resultant tide involving ϵ, δ, and the angle between sun and moon. His formula is

$$M = \epsilon + \delta - 2m^2\,\epsilon + \frac{2m^2n^2\epsilon^2}{\delta} - \frac{2m^2n^4\epsilon^3}{\delta^2}.* \tag{186}$$

The equation between ρ and σ gives, when ρ is small,

$$\sigma = m - n\rho\,; \tag{187}$$

and the equation between ρ and B gives, approximately,

$$\rho = \frac{1}{B}\,; \tag{188}$$

or, less accurately,

$$\rho = \frac{mn\,\epsilon}{\delta}. \tag{189}$$

These values of ρ and σ substituted in the expression for the height of tide give $\frac{1}{2}$ M.

In his third table he again assumes $\epsilon/\delta = \frac{2}{5}$ and takes $\epsilon + \delta$ as unit height.

The value of M is approximately equal to

$$n^2\,A + m^2\,B\dagger \tag{190}$$

where

$$A = \delta + \epsilon,\ B = \delta - \epsilon. \tag{191}$$

By finding the variation in the lunar tide for perigean and apogean distances of the moon, the table just referred to can be made the basis of a more general one which, with the arguments increased by 20°, constitutes Bernoulli's fourth table.

Resuming the values of the lunar tide in terms of the solar, viz.:

$$3\,\epsilon,\ 2\tfrac{1}{2}\,\epsilon,\ 2\,\epsilon,$$

according as the moon is at its perigean, mean, or apogean distance, we find for the several cases

$$\begin{aligned}
A' &= 1{\cdot}2\,\delta + \epsilon = 1{\cdot}14\,(\delta + \epsilon) = 1{\cdot}14\ A,\\
B' &= 1{\cdot}2\,\delta - \epsilon = 1{\cdot}33\,(\delta - \epsilon) = 1{\cdot}33\ B;\\
A' &= \delta + \epsilon = 1{\cdot}00\,\delta + \epsilon = A,\\
B' &= \delta - \epsilon = 1{\cdot}00\,\delta - \epsilon = B;\\
A' &= 0{\cdot}8\,\delta + \epsilon = 0{\cdot}86\,(\delta + \epsilon) = 0{\cdot}86\ A,\\
B' &= 0{\cdot}8\,\delta - \epsilon = 0{\cdot}67\,(\delta - \epsilon) = 0{\cdot}67\ B.
\end{aligned} \tag{192}$$

These values of A′, B′ substituted for A, B in the expression for M give approximately the tabular values of Bernoulli's fourth table, but the numerical coefficients do not exactly agree.

* It may be noted here that the expression

$$\sqrt{\delta^2 + (\epsilon^2 + 2\,\delta\epsilon\cos 2\theta)},$$

where θ is the angle between the sun and moon, gives, when expanded, all but the last term of M.

† Here A and B denote quantities entirely different from the former.

94. To determine the effect of the declination of either luminary upon the tide at a given place, Bernoulli finds by spherical trigonometry the distance of the place from the pole of the tidal spheroid. Then the radius of the spheroid at the place in question becomes known from the fact, already stated, that in an ellipse the radius vector is the half of the minor axis increased by a quantity proportional to the square of the cosine of the angle between it and the major axis.

Denoting the sine of the moon's polar distance by S and the cosine by C, the sine and cosine of the polar distance of the place by s and c, also the cosine of the moon's local hour angle by y, then the height of the lunar tide above mean lunar low water (i. e., a plane $\frac{1}{2}\ \delta$ below mean sea level) is

$$(Ssy + Cc)^2\ \delta, \tag{193}$$

which gives for lunar high water height

$$(Ss + Cc)^2\ \delta \tag{194}$$

or

$$(-Ss + Cc)^2\ \delta, \tag{195}$$

according to the transit used. Expression (193) serves to explain most of the peculiarities of the lunar tide due to the moon's declination, and the latitude of the place. The declinational effect of the sun follows from analogy.

Bernoulli shows how the range of the resultant tide of sun and moon is affected by their angular distances apart, their parallaxes, their declinations, and the latitude of the place considered simultaneously, and his final expression for the range of tide involves all these effects. In this formula he assumes that observations at the particular place furnish values for the spring and neap ranges.

From Bernoulli's discussion it would seem that he intended his tables of phase and parallax corrections to be applicable to all places, although, in the instance just referred to, he assumes that spring and neap heights must be found from observation. He does not state whether or not a general table could be prepared showing the effect of declination (on the semidaily tide). But by taking the mean of (194) and (195) also putting $y = 0$ in (193) for low waters, we see that the effect of declination is to decrease the range as the square of the cosine of the moon's declination.*

It would seem that he supposed the age or *retard* of the tide to be about a day and a half for all places, and so capable of being determined once for all. But he was aware of the fact that within a small extent of longitude the *heur du port*, high-water interval, could assume all values from zero to a half lunar day. He notes the use which might be made of the high-water inequality in keeping track of the tide where the coast line is very irregular.† He erroneously attributes the *retard* to the inertia of the water, as does Newton, but suggests that it may be due in part to the time required for the action of gravitation to reach the earth.‡ He agrees with Newton in the mistaken notion that the smallness of the diurnal inequality is due to the oscillation of the sea, so that a large tide would have a tendency to increase the otherwise small tide following it by twelve hours.§ Both writers failed to see that the tides are forced, and not free, oscillations.

Bernoulli knew that recourse to observation would be necessary for ascertaining, at any given place, quantities like the range of tide, the lunitidal interval, and the magnitude of the diurnal inequality.

Near the close of his essay Bernoulli investigates the amount of rise and fall in a small inclosed sea situated upon the equator. He inadvertently makes the amount twice too great, as Lalande‖ points out. Thus corrected his rule may be stated

$$\left.\begin{matrix}\text{range at}\\ \text{extremities}\end{matrix}\right\} : \left\{\begin{matrix}\text{range for earth}\\ \text{covered with water}\end{matrix}\right. = \text{length of sea} : \text{earth's radius.} \tag{196}$$

*General tables for corrections due to parallax and declination based upon Bernoulli's work were prepared by Lubbock, Phil. Trans., 1836, pp. 57–75 and pp. 217–266. These tables still appear in the annual "Tide Tables for the British and Irish Ports." The tables giving the phase corrections are derived from observations made at the ports for which predictions are given. (See §§ 47, 50–61.)

†Traité sur le flux et reflux de la mer, Ch. X, § 14.

‡Ibid., Ch. VII, § 4.

§Ibid., Ch. X, § 11. Lalande, Astronomie, Vol. IV, p. 81, upholds this explanation; but Laplace, Méc. Cél., Bk. IV, § 8, Bk. XIII, § 1, points out the fallacy of it.

‖Astronomie, Vol. IV, p. 120.

[The truth of this is obvious. For, consider the condition of the tide on a sphere covered with water at a given instant. Reckoning distance from the point of instantaneous half-tide level, the height at a neighboring point on the equator is

$$\text{height } 45^\circ \text{ E. or W.} \times \sin 2\left(\frac{\text{distance}}{\text{earth's radius}}\right). \tag{197}$$

But an inclosed sea will keep its surface parallel to the surface in the supposed case, and its length will be twice the above "distance;"

$$\therefore \text{height at extremities} = \text{height } 45^\circ \text{ E. or W.} \times \sin\left(\frac{\text{length of sea}}{\text{earth's radius}}\right)$$

$$= \text{height } 45^\circ \text{ E. or W.} \times \frac{\text{length of sea}}{\text{earth's radius}}, \text{ when the length is not great.}] \tag{198}$$

95. *Colin Maclaurin* (1698–1746).

Neither Maclaurin nor Euler, in the prize essays already referred to, developed methods for the reduction or prediction of tides, but each added to the theoretical side of the tidal problem. Maclaurin demonstrates for the first time (what Newton had assumed without demonstration) that a homogeneous sphere when disturbed by the moon or sun becomes, upon the equilibrium hypothesis, a prolate ellipsoid. So far as known to the present writer, Maclaurin is the first to call attention to an effect upon the water which the earth's rotation might produce. He says in Proposition VII of his essay:

> If water be carried from the south toward the north, either by the general motion of the tide or by any other cause whatever, the course of the water will thereby be deflected little by little toward the east, because the water at a prior time was carried, by the diurnal motion, toward this sea with a greater velocity than pertains to the more northerly place. Conversely, if the water be carried from the north toward the south, the course of the water, on account of a similar cause, will be deflected toward the west. From this source I suspect various phenomena of the motion of the sea to arise.

He suspects the winds are also affected by the same diurnal motion.

This effect of the earth's rotation forms an essential part of Laplace's dynamical theory of tides. A somewhat analogous question, viz., the effect of the earth's rotation upon a body falling freely from a great height, was discussed by Newton and Dr. Hooke in 1679.

96. *Leonard Euler* (1707–1783).

Euler discusses the tidal problem upon the correct assumption that the tides are caused by the horizontal component of the moon's disturbing force. But if the water have a density comparable to that of the earth, it is necessary to take into account the horizontal attraction of the two instantaneous high-water regions. Euler neglects this and obtains a smaller elevating effect than that given by the equilibrium hypothesis where the density of the earth is assumed to be that of water, and the mutual attraction of the water is properly allowed for. He expresses (§ 44 of his essay) the height of the tide due to sun and moon in spherical harmonic functions of their zenith distances, carrying the expression to the fourth power of the parallaxes.

Later on, he attempts to treat the tides as a problem of fluid motion; that is, he attributes to the fluid particles the property of inertia which the equilibrium theory does not imply. It is now known that the fundamental tidal equations (first obtained by Laplace) have reference to the horizontal motions of the fluid, and to the invariability of its volume. None of these equations were obtained by Euler; he took into account the vertical oscillation only, and neglected the condition of continuity. For a somewhat more detailed review of Euler's essay than is here given, the reader is referred to the introduction of Ferrel's Tidal Researches, which includes the most of Laplace's criticisms upon it.

97. *Joseph Jérôme Lefrançais de Lalande* (1732–1807).

In the fourth volume of his Astronomy, pages 1 to 348, Lalande gives an exhaustive survey of all available tidal knowledge up to the close of the year 1780; in other words, his treatise covers nearly all that was known on the subject prior to the investigations of Laplace. His great familiarity with sources of information can be inferred from the fact that he had been paying attention to the subject during the seventeen years preceding 1780. He was the editor of the

Connaissance des Temps from 1759 to 1774, and again from 1794 to 1807, in which publication a few of his tidal papers appear. He contributed also to the academies at Paris and Dijon.

Among the matters treated or included in his astronomy the following may be mentioned:

The knowledge of tides possessed by the ancient Greeks and Romans. Their theories and other theories (or hypotheses) before the time of Newton. Newton's theory. Work of Maclaurin, d'Alembert, Euler, and Bernoulli. The equilibrium theory. Tidal phenomena or inequalities—phase, parallax, diurnal, and declinational. Observed equinoctial spring tides and other remarkably high tides. Cassini's discussions in the memoirs of the French Academy. Tides in closed seas, especially in the Mediterranean. River tides. Observations at Brest—times and heights of two or three tides daily, from June 10, 1711, to December 31, 1712, and from January 1, 1714, to August 31, 1716. Some observations at Toulon, 1777–78; Rochefort, 1771–72; St. Malo, 1775–76; Havre, 1701–2; Dunkirk, 1701–2, and Katwyk (Holland), 1766. A collection of information bearing upon tides the world over, including sources of information. General circulation of the sea. Earthquake waves. Tides in lakes, including seiches. Intermittent springs. Table of establishments for places in all countries, with authorities and dates of determination.

A glance at this table will show a sudden activity in tidal observations along the coast of Europe, beginning with the year 1701; one of the great incentives to this work was the hope of connecting in a more satisfactory manner the tides and the law of gravitation.

The treatise of Lalande, like those of Riccioli and Gassendi, is of special interest in connection with the historical side of the subject of tides.

98. *Jacques Henri Bernardin de Saint-Pierre* (1737–1814). In memoirs written about 1790,* this writer accounts for the semidaily and semiannual tides and flowings of the sea by the daily and yearly meltings of the ice caps in the northern and southern polar regions. He believes the heat of the moon may have some small share in melting the snow and ice. He states that certain lakes have tides from the similar periodic melting of snow and ice on the surrounding mountains. The annual flow of water from the polar regions (as evidenced by icebergs always moving toward the equator) results, he thinks, naturally enough from the hypothesis of the elder Cassinis which regards the polar diameter of the earth the greatest diameter instead of the least.

Saint-Pierre's hypothesis is examined by Woods in the Philosophical Magazine, Vol. 8 (1800).

S. Bennett, in a small volume entitled "A new Explanation of the Ebbing and Flowing of the Sea, upon the Principles of Gravitation,"† makes most of the points against the commonly accepted notion that the vertical attraction of the moon produces the tides, and shows that the horizontal attraction is the real cause.

A rather important remark of his is that since the moon's daily period exceeds that of the sun, the lunar tides will get under way better than the solar and so would become greater even if the forces to which they are due were equal.

* Œuvres complètes (1818), Vol. XI, pp. 425–508. Œuvres posthumes (1840), pp. 405–427. † New York, 1816.

CHAPTER VII.

LAPLACE.*

99. Laplace's work upon the tides occurs in Books IV and XIII of his Mécanique Céleste. Near the beginning of the thirteenth book he gives an account of his work in this direction and of the results obtained. For our purpose, it has seemed best to give this account at the outset. It will be noticed that his aim is theoretical rather than practical; i. e., he tries to develop a rational theory for explaining tidal phenomena. In most of his comparisons between theory and observation, however, he virtually falls back upon the equilibrium hypothesis; but his kinetic theory enables him to explain in a general way certain features of the tide which do not accord with conditions of static equilibrium. For instance, the comparatively small diurnal tide at Brest; also the fact that relative sizes of partial tides of nearly but not exactly equal periods may depend in part upon the motion in right ascension of the tidal bodies.

The work of Laplace has been of much practical importance in the treatment of tides. He points out the three different species of oscillations and shows how to obtain the constants involved in them from tidal observations. In fact, up to the present time the predictions for the French ports have been based upon the formula obtained by Laplace for the port of Brest. His principle of forced oscillations has since become, in the hands of Sir William Thomson (Lord Kelvin), the foundation of the most practical as well as the most accurate system known for the treatment of tidal observations.

The following authors have commented upon, expounded, or restated the principal parts of Laplace's tidal theory:

Nathaniel Bowditch, Mécanique Céleste, by the Marquis de la Place, Translated with a Commentary, Vol. I (1829), Vol. II (1832).

George B. Airy, Tides and Waves (c. 1842).

H. Resal, Traité élémentaire de Mécanique Céleste (1885).

Edmond Dubois, Résumé analytique de la Théorie des Marées telle qu'elle est établie dans la Mécanique Céleste de Laplace (1885).

100. The motion of fluids which cover the planets was then a subject almost entirely new, when, in 1774, I undertook to treat it. Aided by the discoveries which had just been made in the calculus of partial differences and in the theory of fluid motion, discoveries in which d'Alembert had a large share, I published in the Mémoirs de l'Académie des Sciences, for the year 1775, the differential equations of the motion of the fluids which cover the earth, when they are attracted by the sun and moon. I first applied these equations to the problem which d'Alembert had tried in vain to solve; viz., that of the oscillations of a fluid which would cover the earth assumed to be spherical and without rotation, supposing the attracting star in motion around our planet. I gave the general solution of this problem, regardless of the density of the fluid and its initial state, assuming that each molecule of the fluid experiences a resistance proportional to its velocity; this made me see that the primitive conditions of the motion are annihilated in the long run by the friction and small viscosity of fluid. But the inspection of differential equations very soon made me recognize the necessity of having regard to the rotary motion of the earth. I therefore considered this motion, and especially strove to determine the oscillations of the fluid which are independent of its initial state, and which alone are permanent. These oscillations are of three classes. Those of the first class are independent of the rotary motion of the earth, and their determination offers few difficulties. The oscillations dependent upon the earth's rotation, and whose period is about one day, form the second class. Finally, the third class is composed of oscillations whose period is about half a day: they are considerably larger than the others in our ports. I determined the diverse oscillations, exactly in such cases as it is possible, and by rapidly convergent approximations in the other cases. The excess of one high water over an adjacent one—the tide-producing body being in the solstice—depends upon oscillations of the second class. This excess is scarcely sensible at Brest, where, according to the theory of Newton, it should be very large. This great geometer and his successors attributed, as I have said, this discrepancy between their formulæ and the observations to the inertia of the waters of the ocean. But analysis made me see that it depends upon the law of depth of the sea. I then sought the law which would

* Pierre Simon, Marquis de Laplace (1749-1827).

render this excess zero, and I found that the depth of the sea for that purpose should be constant. Finally, assuming the figure of the earth elliptical, which also gives the sea an elliptical figure of equilibrium; I gave the general expression for inequalities of the second class, and I concluded therefrom this remarkable proposition; viz., that the movements of the terrestrial axis are the same as they would be if the sea formed with the earth a solid mass. This was contrary to the opinion of geometers, and especially d'Alembert, who, in his important work on the precession of the equinoxes, had advanced the theory that the fluidity of the sea took from it all influence upon this phenomenon. My analysis made me recognize, moreover, the general condition for the stability of the sea's equilibrium. Geometers, considering the equilibrium of a fluid placed upon an elliptic spheroid, had pointed out that in flattening its figure a little it tends to return to its initial state only in the case where the ratio of its density to that of the spheroid should be below $\frac{1}{4}$; and they had made out of this condition the condition of the stability of the equilibrium of the fluid. But it is not sufficient in this research to consider a state of repose of the fluid very near to the state of equilibrium; it is necessary to assume in this fluid any very small initial motion and to determine the necessary condition for having the motion always remain within narrow limits. In looking at this problem from a general point of view, I found that if the mean density of the earth exceed that of the sea this fluid, disturbed by any causes whatever from its state of equilibrium, will never deviate therefrom save by very small quantities; but that the deviations might be very large if this condition were not fulfilled.* Finally I determined the oscillations of the atmosphere as those upon the ocean which it surrounds, and I found that the attractions of the sun and moon can not produce the constant movement from east to west which we observe under the name of *trade winds*. The oscillations of the atmosphere produce in the height of the barometer small oscillations whose extent at the equator is a half millimetre and which deserve the attention of observers.

The preceding researches, although very general, are still far from representing the observations upon the tides in our ports: they assume the surface of the terrestrial spheroid regular and entirely covered by the sea; and we feel that the great irregularities of this surface ought to considerably modify the movement of the waters by which it is covered only in part. In fact, experience shows that accessory circumstances produce considerable varieties in the heights and in the intervals of the tides at ports even when very near one another. It is impossible to submit these varieties to calculation because the circumstances upon which they depend are not known; and even when they are known the extreme difficulty of the problem would prevent its solution. However, in the midst of the numerous modifications of the motion of the sea due to circumstances, this motion preserves, with the forces which produce it, ratios suitable for indicating the nature of these forces and for verifying the law of the attraction of the sun and moon upon the sea. Inquiry into these ratios of the causes to their effects is not less useful in natural philosophy than is the direct solution of the problems, either for verifying the existence of these causes or for determining the laws of their effects; it is of use more frequently, and it is thus, with the calculus of probabilities, a happy supplement to the ignorance and the feebleness of the human mind. In the present question I make use of the following principle, which may be useful on other occasions:

"The state of a system of bodies in which the initial conditions of the motion have disappeared through the resistance which this motion experiences is periodic, like the forces which animate it."

From this I concluded that if the sea is actuated by a periodic force expressed by the cosine of an angle which increases uniformly with the time; there results from it a partial tide expressed by the cosine of an angle increasing in the same manner, but in which the constant involved in this angle and the coefficient of this cosine may be, by virtue of accessory circumstances, very different from the same constants in the expression for the force and can be determined only through observation. The expression for the actions of the sun and moon upon the sea can be developed in a convergent series of similar cosines. Whence arise as many partial tides as, by the principle of the coexistence of small oscillations, being added together, constitute the tide which is observed in a port. It is from this point of view that I have investigated the tides in Book IV. In order to connect with these the diverse constants of the partial tides, I considered each partial tide as produced by the action of a star which moves uniformly in the plane of the equator. The tides whose period is about half a day are due to the action of stars whose proper motion is very slow in comparison with the rotary motion of the earth; and as the angle of the cosine term which expresses the action of one of these stars is a multiple of the rotation of the earth plus or minus a multiple of the proper motion of the star; and as besides the constants of these cosine terms which express the tides produced by two stars should have the same ratios as the constants of the cosine terms which express their actions, provided the proper motions were equal: I have supposed that the ratios varied from one star to another proportionally to the difference of their proper motions. The error of this hypothesis, if there be any, has no sensible influence upon the principal results of my calculations.

The greatest variations in the heights of the tides in our ports are due to the action of the sun and moon, supposed to move uniformly in their orbits and always at the same distance from the earth. But for obtaining the law of these variations it is necessary to so combine the observations that all the other variations disappear from the result. It is this which we obtain in considering the heights of the high waters above the neighboring low waters in the syzygies and quadratures taken in equal number toward each equinox and toward each solstice. By this means the tides which are independent of the rotation of the earth and those having a period of about a day should disappear, as well as the tides produced by the variation of the distance of the sun from the earth. In considering three consecutive syzygies or three consecutive quadratures, and in doubling the intermediate one, we cause the tide which is produced by the variation of the distance of the moon to disappear; because if this star is in perigee in one syzygy it is very near apogee in the syzygy following; and the compensation increases in accuracy proportionately to the greater number of observations employed. By this procedure the influence of the winds upon

*Cf. Kelvin, Popular Lectures and Addresses, Vol. II, p. 328.

the result of observations becomes almost nothing; for if the wind elevates the height of a high water it elevates by nearly the same amount the neighboring low water, and its effect disappears in the difference of the two heights. Thus, by so combining observations that their combination presents only one element, we are able to determine successively all elements of the phenomena. The analysis of probabilities furnishes a method still more sure for obtaining these elements and which we can designate by the name of *the most advantageous method.* It consists in forming between the elements as many equations of condition as there are observation equations. We reduce by the rules of this method the number of these equations to that of the elements which we determine in solving the equations so reduced. It is by this process that Mr. Bouvard has constructed his excellent tables of Jupiter, Saturn, and Uranus. But the observations of the tide being far from attaining the precision of astronomical observations, the great number of them which it is necessary to employ in order that their errors counterbalance one another does not permit us to apply to them the most advantageous method.

101. Upon the invitation of the Académie des Sciences and at the beginning of the last century, observations were made upon the tides in the port of Brest during six consecutive years. It is with these observations, published by Lalande, that I have compared my formulæ in the book cited. The situation of this port is very favorable to this kind of observations: it communicates with the sea by a vast canal, at the head of which the city is built. Thus the irregularities of the motion of the sea come into the port much weakened, nearly as the oscillations which the irregular motion of a vessel produces in the barometer are lessened by a choking made in the tube of this instrument. Moreover, the tides being considerable at Brest, accidental variations are only a small part of them. If we multiply the observations of these tides a little we notice a great regularity which the little river that loses itself in the large bay of this port does not alter. Struck by this regularity, I proposed to the Government to have a new series of observations of the tides made at Brest, and that it be continued at least during one period of the lunar node. Under these circumstances the observations were undertaken. These new observations date from the first of June, 1806, and since that time they have been continued each day without interruption. We have treated those belonging to the year 1807, and the fifteen following years. I owe to the indefatigable zeal of Mr. Bouvard whatever concerns astronomy, and the immense calculations which the comparison of my analysis with the observations has exacted. He has employed in it nearly six thousand observations: the results of these calculations are consigned to the tables which we shall see further on. For obtaining the height of the high waters and their variation, which, near the *maximum* and *minimum* is proportional to the square of the time, we have treated near each equinox and near each solstice three consecutive syzygies between which the equinox or the solstice was comprised: we have doubled the results of the intermediate syzygy in order to destroy the effects of the lunar parallax. We have taken in each syzygy the height of the evening high water above the morning low water of the day which precedes syzygy, of the day of syzygy, and of the four following days; because the *maximum* of the tides falls nearly in the middle of this interval: the choice of hours is based upon the notion that observations made during the day should therefore be more sure and more exact. We have made for each of the sixteen years one sum out of the heights of the tides of the corresponding days in the equinoctial syzygies and a similar sum relative to the solstitial syzygies, and we have therefrom ascertained the *maxima* of the heights of the high waters near the syzygies, either equinoctial or solstitial, and the variations of these heights near their *maxima*. The inspection of these heights and their variations show the regularity of this species of observations in the port of Brest.

In the quadratures we have followed a similar process, save with the difference that we have taken the excess of the morning high water above the evening low water of the day of the quadrature, and of the three days which follow it. The increase of the quadrature tides, starting with their *minimum*, being much more rapid than the diminution of the syzygial tides, starting with their *maximum*, we ought to restrict to a very small interval the law of variation proportional to the square of the times. We have formed for each of the sixteen years tables similar to those of the syzygial tides.

All these tables put in evidence the influence of the declination of the sun and moon, not only upon the absolute heights of the tides, but also on their variations. Several savants, and especially Lalande, have called this influence in doubt, because, instead of considering a great number of observations, they have confined themselves to some isolated observations when the sea, by the effect of accidental causes, was elevated to a great height toward the solstices. But the most simple application of the calculus of probabilities to the results of Mr. Bouvard is sufficient to see that the probability of the influence of the declination of the stars exceeds and is much superior to that of a great number of facts on which we do not permit ourselves to have any doubt.

We have determined from the variations of the tides near their *maxima* and *minima*, the interval by which these *maxima* and these *minima* follow the syzygies and the quadratures, and we have found this interval to be a day and a half, very nearly, which is perfectly in accord with what the old observations gave me in Book IV. The same agreement takes place relative to the sizes of these *maxima* and *minima* and in reference to the variations of the heights of the tides going from these points, so that nature after a cycle is found conformable to herself. The interval of which I have just spoken depends upon constants under the cosine signs in the expression for the two principal tides due to the action of the sun and moon. The corresponding constants of the expression of the forces are differently modified by the accessory circumstances: at the moment of syzygy the lunar tide precedes the solar tide, and it is only a day and a half afterwards, the lunar tide retarding each day upon the solar tide, that these two tides coincide and thus produce the *maximum* of the resultant tides. A similar modification takes place in the constants which multiply the cosines: thence there results an augmentation in the action of the stars on the sea. I have given in Book IV the means of recognizing this augmentation, which I have found about one-tenth from the old observations; but, however the observations of the tides at quadrature agree on this point with the observations of syzygial tides, I have said that so delicate an element would require a very much greater number of observations. The calculations

of Mr. Bouvard have confirmed the existence of this increment and have increased it to about one-fourth for the moon. The determination of this ratio is necessary in order to ascertain from tidal observations the true ratios of the actions of the sun and moon, upon which ratio depends the phenomena of the precession of the equinoxes and of the nutation of the earth's axis. In correcting the actions of the stars on the sea for the increments due to the accessory circumstances, we find expressed in sexagesimal seconds 9″·4 for the nutation, 6″·8 for the lunar equations of the tables of the sun, and for the mass of the moon $\frac{1}{75}$ that of the earth. These results are very little different from those given by the discussion of astronomical observations. The accordance of values obtained by methods so diverse is very remarkable. It is in comparing with my formulæ the *maxima* and *minima* of the observed heights of the tides that the actions of the sun and moon upon the sea, and their augmentations have been determined. The variations of the heights of the tides near these points are a series necessary for the purpose; in substituting, then, the values of these actions in my formulæ we should return to very nearly the observed variations. It is this that, in fact, we find. This accordance is a grand confirmation of the law of universal gravitation; it receives a new confirmation from tidal observations taken at syzygies when the moon is near apogee or near perigee. I have considered in Book IV only the difference of the heights of the tides for these two positions of the moon. I consider further the variation of these heights going from their *maxima*, and on these two points my formulæ represent the observations.

The times of the tides and retards from day to day offer the same varieties as their heights. Mr. Bouvard has formed of them tables for the tides which he had employed in the determination of their heights. We there clearly see the influence of the declinations of the stars and of the lunar parallax. These observations, compared with my formulæ, offer the same accordance as the observations upon the heights. Without doubt we might make the small anomalies, which comparisons still present, disappear by properly determining the constants of each partial tide. The principle by which I have united these diverse constants cannot be rigorously exact. Perhaps also the quantities which we neglect in adopting the principle of the coexistence of oscillations might become sensible in large tides. I have here contented myself with noting these small anomalies in order to direct those who would extend these calculations when the observations of the tides which are being made at Brest, and which are deposited at the royal observatory, shall be numerous enough for making certain that the anomalies are not due to errors of the observations. But before modifying the principles which I have made use of, it will be necessary to carry further the analytical approximations.

Finally, I have considered the tide whose period is about a day. In comparing the differences of two consecutive high waters and two consecutive low waters in a great number of solstitial syzygies, I have determined the amplitude of this tide and the hour of its *maximum* in the port of Brest. I found its range to be about one-fifth of a meter and about one-tenth of a day for the time by which it precedes the time of the *maximum* of the semidiurnal tide at Brest. Although its amplitude be not one-thirtieth of the amplitude of the semidiurnal tide, at the same time the generating forces of these two tides are nearly equal, which shows how differently the accessory circumstances influence the amplitudes of the tides. One will not be surprised, if he consider that in the case where the surface of the earth is regular and entirely covered by the sea, the diurnal tide should disappear if the depth of the sea were constant.

The accessory circumstances might even make the semidiurnal inequalities disappear in a port and make the diurnal inequalities very sensible. Then there is only one tide each day, and this disappears when the stars are in the equator. It is this which has been observed at Batsham, a port of the Kingdom of Tonquin, and in some islands of the South Sea. I shall observe, relatively to these circumstances, that some belong to the entire sea and are due to causes very remote from the port where the tides are observed. We cannot doubt, for example, that the undulations of the Atlantic Ocean and South Sea, reflected by the eastern coast of America, which extends almost from one pole to the other, should have a great influence upon the tides of the port of Brest. It is principally upon these circumstances that the phenomena, which are nearly the same in our ports, depend. Such appears to be the retard of the highest tide after the instant of syzygy. Other circumstances nearer the port, such as the neighboring coasts or straits, produce the differences which one observes between the heights and times of the tides in ports near together. From this it follows that a partial tide has not, with the latitude of the port, the ratio indicated by the force which produces it; since it depends upon similar tides corresponding to the latitudes far away and even in another hemisphere. We can, then, determine only by observation the sign and amplitude of this tide.

The phenomena of the tides of which I have just spoken depend upon the terms of the development of the action of the stars divided by the cube of their distances from the earth, the only ones which we have considered heretofore. But the moon is sufficiently near the earth for rendering the terms of the expression of its action divided by the fourth power of its distance sensible in the results of a great number of observations; for we know by the theory of probabilities that the number of observations supplements their want of precision, and put in evidence inequalities much less than the errors of which each observation is susceptible. We may even by this theory assign the number of observations necessary for acquiring a great probability that the error of the result obtained is included within given limits. I have thought, therefore, that the influence of the terms of the action of the moon divided by the fourth power of her distance to the earth might be manifest in the combination of the numerous observations discussed by Mr. Bouvard. The tides corresponding to the terms divided by the cube of the distance give no difference between the tides of the new moons and those of the full moons, but those which have for divisor the fourth power of her distance make a difference between these tides. They produce a tide whose period is about a third of a day. The observations of Mr. Bouvard discussed under this point of view indicate with a great probability the existence of this partial tide. They establish, further, without any doubt, that the action of the moon for producing tide at Brest is greater when her declination is south than when it is north, which can be due only to the terms of the lunar action divided by the fourth power of the distance.

We see by this exposition that the research containing the general ratios between the phenomena of the tides and the actions of the sun and moon on the sea supplement in a happy fashion the impossibility of integrating the differential equations of its motion and the ignorance of the necessary data for determining the arbitrary functions which enter into their integrals; thence results a complete certitude that these phenomena have as their only cause the attraction of these two bodies conformable to the law of universal gravitation.

I have insisted particularly upon the flow and ebb of the sea because it is, of all the effects of the attraction of celestial bodies, the nearest to us and the most sensible; moreover, it appeared to me very proper to show how we could recognize and determine by a great number of observations, although made with little precision, the laws and the causes of the phenomena for which it is impossible to obtain the analytical expressions by the formation and integration of their differential equations. Such are the effects of the solar heat upon the atmosphere in the production of trade winds and monsoons, and in the regular variations, either diurnal or annual, of the barometer and the thermometer.

102. By §§ 1, 3, Bk. IV, the general differential equations of the motion of a perfect fluid upon a sphere may be written

$$y = -\frac{\partial(\gamma u)}{\partial\theta} - \frac{\partial(\gamma v)}{\partial\varpi} - \frac{\gamma u \cos\theta}{\sin\theta}, \tag{199}$$

$$\frac{\partial^2 u}{\partial t^2} - 2n\sin\theta\cos\theta\frac{\partial v}{\partial t} = -g\frac{\partial y}{\partial\theta} + \frac{\partial V'}{\partial\theta}, \tag{200}$$

$$\sin^2\theta\frac{\partial^2 v}{\partial t^2} + 2n\sin\theta\cos\theta\frac{\partial u}{\partial t} = -g\frac{\partial y}{\partial\varpi} + \frac{\partial V'}{\partial\varpi}; \tag{201}$$

or

$$y = \frac{\partial(\gamma u\sqrt{1-\mu^2})}{\partial\mu} - \frac{\partial(\gamma v)}{\partial\varpi}, \tag{202}$$

$$\frac{\partial^2 u}{\partial t^2} - 2n\mu\sqrt{1-\mu^2}\frac{\partial v}{\partial t} = \sqrt{1-\mu^2}\frac{\partial}{\partial\mu}(gy - V'), \tag{203}$$

$$\frac{\partial^2 v}{\partial t^2} + \frac{2n\mu}{\sqrt{1-\mu^2}}\frac{\partial u}{\partial t} = -\frac{1}{1-\mu^2}\frac{\partial}{\partial\varpi}(gy - V'), \tag{204}$$

where

1 = the earth's radius;
θ = the polar distance of the particle subject to disturbance;
$\mu = \cos\theta$;
ϖ = the terrestrial longitude of this particle;
y = the elevation of the particle above the surface of the undisturbed sea;
u = the corresponding change in θ;
v = the corresponding change in ϖ;
γ = the depth of the sea, supposing it to be small in comparison with the earth's radius and to be a function of the independent variables θ, ϖ, or μ, ϖ where $\mu = \cos\theta$;
nt = the rotary motion of the earth;
g = the force of gravity;
V (found below) = the potential of the disturbing forces—that is, the function whose partial differential coefficients are the impressed forces in the corresponding directions;
V' = this potential increased by the potential due to the disturbed water; i. e., V' is the entire tide-producing potential on the statical or equilibrium hypothesis.*

If u, v are to represent quantities proportional to the horizontal distances moved over by the disturbed particle, then $u, v \sin\theta$ (of Laplace) should be replaced by u, v; and the above equations

* Comparison between notations:

Laplace Méc. Cél.);	θ,	ϖ,	y,	u,	v,	γ,	nt, V', g.
Résal (Méc. Cél.);	θ,	ϖ,	z,	u or u/r,	$v/\sin\theta$ or $v/r\sin\theta$,	γ,	nt, V, g.
Darwin (Enc. Brit.);	θ,	ϕ,	h/a	ξ/a,	η/a	γ/a,	nt, gx/a^2, g/a.

Darwin's a denotes the earth's radius which Laplace, and generally Résal, assume to be unity. The character x as here used and as used in §§ 11, 12 of article "Tides," Enc. Brit., denotes the equilibrium height of the tide. In § 6 of the same article, this height is $\frac{1}{3}acP_2$, c there being a constant.

Laplace's α is here generally omitted.

take the form given by Résal in his Mécanique Céleste, § 132. The equation not involving t is the equation of continuity for an incompressible fluid; the other two equations respectively express relations between the different forces acting along the meridian and parallel. When friction is taken into account and assumed to be proportional to the velocity of the fluid particle (as is done in § 6, Bk. IV), a term of the form $\beta \frac{\partial u}{\partial t}$ must be included in (200) and one of the form $\beta \sin \theta \frac{\partial v}{\partial t}$ in (201) divided by sin θ, and these two equations will still remain linear; but not so if the resistance due to friction be proportional to some power of the velocity other than the first. Before integrating these equations, something must be known about V' and something assumed in regard to the depth γ.

Let

r = the distance between the earth's center and the center of the disturbing body L;
L = the mass of the disturbing body;
ψ = its right ascension;
v = its declination.

Then by § 1, Bk. IV,

$$V = \frac{L}{\sqrt{r^2 - 2r\delta + 1}} - \frac{L}{r} - \frac{L}{r^2}\delta^*, \tag{205}$$

wherein

$$\delta = \cos\theta \sin \text{v} + \sin\theta \sin \text{v} \cos(nt + \varpi - \psi),$$

and so δ is the cosine of the angle between L and the disturbed particle as seen from the earth's center.

Now by § 23, Bk. III, this may be developed in powers of $1/r$, thus

$$V = \frac{Z^{(2)}}{r^3} + \frac{Z^{(3)}}{r^4} + \frac{Z^{(4)}}{r^5} + \ldots, \tag{206}$$

where $Z^{(i)}$† is a rational integral function of μ (= cos θ), $\sqrt{1-\mu^2}\sin\varpi$ and $\sqrt{1-\mu^2}\cos\varpi$ of the degree i, such that

$$\frac{\partial\left\{(1-\mu^2)\frac{\partial Z^{(i)}}{\partial\mu}\right\}}{\partial\mu} + \frac{\frac{\partial^2 Z^{(i)}}{\partial\varpi^2}}{1-\mu^2} + i(i+1)Z^{(i)} = 0. \tag{207}$$

By putting $Z^{(i)}/r^{i+1}$ equal to $U^{(i)}$, (206) will be a series of U's. Laplace expresses the part of V' due to the spherical layer by means of a series of Y's, any one of which satisfies equation (207). The combined result is

$$\therefore V' = \Sigma U^{(i)} + \Sigma \frac{3g}{\rho}\frac{Y^{(i)}}{2i+1}, \tag{208}$$

ρ being the mean density of the earth, that of water being unity.

[When $i = 2$, which is the case for the tides, total V' is to partial V', or V, as $1 : 1 - \frac{3}{5\rho}$. $\frac{3}{5\rho}$ being a small fraction is sometimes disregarded by Laplace.‡ In fact, his theory generally fails to take into account the attraction of the water in its actual disturbed state.]

103. In treating the three fundamental equations (202)–(204), Laplace confines himself to the case where the depth, γ, is a function of μ without ϖ. He seeks solutions wherein y, u, v, V' are of the following forms:

$$y = a\cos(it + s\varpi + \varepsilon), \tag{209}$$
$$u = b\cos(it + s\varpi + \varepsilon), \tag{210}$$
$$v = c\sin(it + s\varpi + \varepsilon), \tag{211}$$
$$y - \frac{V'}{g} = a'\cos(it + s\varpi + \varepsilon), = y', \tag{212}$$

Cf. equation (106), Part II.

† $Z^{(i)}$ is proportional to $P_i(\delta)$ or $Y_i(\mu, \varpi)$ in recent notation.

‡ See § 36, Part II.

a, b, c, a', being rational functions of μ and $\sqrt{1-\mu^2}$, s being an integer; y' is the excess of the true height of the tide (y) above the equilibrium height (V'/g or V/g).* These values substituted in (203), (204) give

$$b = \frac{-g(1-\mu^2)\frac{\partial a'}{\partial \mu} + \frac{2ngs}{i}\mu a'}{(i^2 - 4n^2\mu^2)\sqrt{1-\mu^2}}, \tag{213}$$

$$c = \frac{\frac{2ng}{i}\mu(1-\mu^2)\frac{\partial a'}{\partial \mu} - gsa'}{(i^2 - 4n^2\mu^2)(1-\mu^2)}; \tag{214}$$

and these values of b and c substituted in (202) give

$$a = g\frac{\partial}{\partial \mu}\left\{ z\left[\frac{2ns}{i}\mu a' - (1-\mu^2)\frac{\partial a'}{\partial \mu}\right]\right\}$$

$$+ \frac{2ngs\,\mu z}{i(1-\mu^2)}\left\{\frac{2ns}{i}\mu a' - (1-\mu^2)\frac{\partial a'}{\partial \mu}\right\} + \frac{s^2 g\, z\,(i^2 - 4n^2\mu^2)\,a'}{i^2(1-\mu^2)} \tag{215}$$

wherein

$$z = \frac{\gamma}{i^2 - 4n^2\mu^2}.$$

This is known as Laplace's tidal equation for an ocean whose depth is constant along any parallel of latitude. When by its solution a' has been found, b and c become known by the two preceding equations.

He does not attempt to integrate his equation, but merely to satisfy it. The primitive motions of the ocean must long ago have disappeared because of the resistances which the waters encounter, and so the tide must depend upon the tide-producing bodies; the oscillation of the ocean ought to correspond to the approximately periodic terms of the attraction of these bodies.

Neglecting terms in $1/r^4$, expression (205) becomes

$$\frac{3}{2}\frac{L}{r^3}\left(\delta^2 - \frac{1}{3}\right); \tag{216}$$

or, when arranged with reference to $(nt + \pi - \psi)$,

$$\frac{L}{4r^3}\left\{\sin^2 \mathrm{v} - \frac{1}{2}\cos^2 \mathrm{v}\right\}\left\{1 + 3\cos 2\theta\right\}$$

$$+ \frac{3L}{r^3}\sin\theta\cos\theta\sin \mathrm{v}\cos \mathrm{v}\cos(nt + \varpi - \psi)$$

$$+ \frac{3L}{4r^3}\sin^2\theta\cos^2 \mathrm{v}\cos 2(nt + \varpi - \psi).\dagger \tag{217}$$

---

* Comparison between notations:

Laplace (Méc. Cél.); r, a, b, c, a', i, s, ε.

Résal (Méc. Cél.); A, a, b, c, a', i, s, ζ.

Darwin (Enc. Brit.); r, h, x, y, $\mathrm{u} = \mathrm{h} - \mathrm{e}$, $2nf$, k, α.

Darwin's r, h, y, x, and u must be divided by his a, the earth's radius, in order to make them comparable with r, a, b, c, and a' of Laplace.

† These terms may be written

$$\frac{L}{4r^3}(1-3\cos^2\theta)(1-3\sin^2 \mathrm{v}) + \frac{3L}{4r^3}\sin 2\theta\sin 2\,\mathrm{v}\cos(nt + \varpi - \psi)$$

$$+ \frac{3}{4}\frac{L}{r^3}\sin^2\theta\cos^2 \mathrm{v}\cos 2(nt + \varpi - \psi), \tag{218}$$

or, using Ferrel's notation,

$$\Sigma_s \mathrm{N}_s \cos s(nt + \varpi - \psi) \tag{219}$$

where $s = 0$, 1, and 2.

Referring to this expression Laplace remarks:

As the three quantities r, v, ψ, vary with extreme slowness, in comparison with the rotary motion of the earth; the three preceding terms produce three different species of oscillations. The periods of the oscillations of the first kind are very long; they are independent of the rotary motion of the earth, and depend wholly upon the motion of the body L in its orbit. The periods of the oscillations of the second species depend chiefly on the rotary motion of the earth nt; their duration is nearly one day. Lastly the periods of the oscillations of the third kind depend chiefly on the angle 2nt; they are completed in about half a day.

The equation (215) is a linear differential equation; hence it follows, he remarks, that these three species of oscillations can exist together, without being confounded with each other; therefore, we may consider them separately. These three kinds of tides are then discussed by putting s successively equal to 0, 1, and 2.

104. *Oscillation of the first species.*—The expression for c indicates that for small values of i as in case of oscillation of the first species, the east-and-west motion of the fluid particle may be great in comparison with the other motions, provided there is no fluid friction involved. Laplace believes that the resistances which the waters encounter will, in the case under consideration, reduce the oscillations to their equilibrium values, especially in the case of the sun [Bk. IV, § 6].* The oscillation of long period thus becomes

$$y=\frac{L\,(\sin^2 \mathrm{v}-\tfrac{1}{2}\cos^2 \mathrm{v})\,(1+3\cos 2\theta).}{4\,r^3 g\left(1-\frac{3}{5\rho}\right)} \tag{220}$$

Oscillations of the second species.—Here $i=n$, and $s=1$; γ is assumed to be equal to $l\,(1-q\mu^2)$, l and q being constant for all latitudes.

He finds for the height of the oscillation of the second species an expression which becomes

$$y=\frac{\frac{6L}{r^3}\,lq\sin\theta\cos\theta\sin \mathrm{v}\cos \mathrm{v}}{2\,lgq-n^2}\cos(nt+\varpi-\psi) \tag{221}$$

when we neglect the small fraction $\frac{3}{5\rho}$. The coefficient is a, or the amplitude of the oscillation. This coefficient diminished by the (astronomical) equilibrium value is the value of a'. These values of i, s, γ, a and a' satisfy the fundamental equation (215); moreover, y has a form analogous to the corresponding term in the tide-producing potential. This is therefore a solution of Laplace's tidal equation of the required form.

When the depth is such that q is small this oscillation, and so the diurnal inequality becomes small. When the depth is constant all over the sphere $q=0$, and so oscillations of the second species vanish everywhere.†

The coefficients b and c become known by (213), (214) as soon as a' has been determined; the horizontal oscillations become

$$u=-\frac{\frac{3L}{r^3}\sin \mathrm{v}\cos \mathrm{v}}{2lgq-n^2}\cos(nt+\varpi-\psi), \tag{222}$$

$$v=\frac{\frac{3L}{r^3}\frac{\cos\theta}{\sin\theta}\sin \mathrm{v}\cos \mathrm{v}}{2lgq-n^2}\sin(nt+\varpi-\psi). \tag{223}$$

These do not vanish when $q=0$; i. e., tidal currents of a daily period would exist in the case of an ocean of uniform depth covering the sphere.

In the second as well as in the third species, Laplace finds a value of q which will enable one to determine the oscillation even if i be not exactly equal to n or to $2n$.

* Darwin concludes [Proc. Roy. Soc., Vol. 41 (1886), pp. 339, 342, and Enc. Brit. art. "Tides"] that this hypothesis is untenable unless the period be very long, as in the case of the minute oscillation whose period is nearly 19 years.

† See under Newton and Bernoulli.

105. *Oscillations of the third species, the depth being constant.*

The quantities r, ψ, and v vary slowly in comparison with $2nt$, and so may be treated as constants. The small fraction $1/\rho$, which expresses the ratio of the density of the sea to that of the earth, may be regarded as negligible. Putting $i = 2n$ and $s = 2$, the oscillation corresponding to the semidiurnal term of V', or

$$V_2' = \tfrac{3}{4}\frac{L}{r^3}\sin^2\theta\cos^2 \mathrm{v}\cos 2\,(nt + \varpi - \psi), \tag{224}$$

is

$$y = a\cos(2nt + 2\varpi - 2\psi. \tag{225}$$

$$\therefore a' = a - \tfrac{3}{4}\frac{L}{r^3 g}(1 - \mu^2)\cos^2 \mathrm{v}. \tag{226}$$

The depth being constant, $\gamma = l$. Substituting these values of a' and γ in Laplace's equation (215), it becomes

$$\frac{4n^2}{lg}a(1 - \mu^2)^2 = -\frac{\partial^2 a}{\partial\mu^2}(1 - \mu^2)^2 + (6 + 2\mu^2)a - \frac{6L}{r^3 g}(1 - \mu^2)\cos^2 \mathrm{v}; \tag{227}$$

or putting

$$1 - \mu^2, \text{ or } \sin^2\theta, = x^2,$$

$$x^2(1 - x^2)\frac{\partial^2 a}{\partial x^2} - x\frac{\partial a}{\partial x} - 2a\left(4 - x^2 - \frac{2n^2}{lg}x^4\right) + \frac{6L}{r^3 g}x^2\cos^2 \mathrm{v} = 0. \tag{228}$$

To satisfy this equation, replace a by the assumed value

$$a = A^{(1)}x^2 + A^{(2)}x^4 + A^{(3)}x^6 + \ \ldots \tag{229}$$

and compare coefficients of like powers of x.

$$\therefore A^{(1)} = \frac{3}{4}\frac{L}{r^3 g}\cos^2 \mathrm{v}; \tag{230}$$

the comparison of the coefficients of x^4 gives an identity; but all following coefficients can be expressed in terms of $A^{(1)}$ and $A^{(2)}$.

Laplace's determination of the coefficient of x^4 has led to discussions by Airy,* Ferrel,† Thomson,‡ Darwin,§ and G. H. Ling.‖

Laplace assigns (Bk. IV, § 10) values to l such that $2n^2/lg = 20$, 5, and 5/2 successively; that is, since $n^2/g = 1/289$,

$$l = \frac{1}{2890}, \quad \frac{1}{722{\cdot}5}, \quad \frac{1}{361{\cdot}25},$$

the earth's radius being unity. The value of a' becomes a series in powers of x^2, each having a numerical coefficient, and (230) as a general coefficient. For places on the equator the three corresponding spring ranges of the semidiurnal tide are, if $A^{(1)} = 0{\cdot}12316$ meters,

7·34, 11·05, 1·90 meters.

The expressions show that the tides are inverted in the first instance but direct in the second and third. In high altitudes, however, the tides are always direct. For a great depth, the equilibrium spring range is approached which is 0·98528 meter, assuming the tidal effect of the moon thrice that of the sun and disregarding the density of the water.

---

* Tides and Waves, Arts. 110–113.
Phil. Mag., Vol. 50 (1875), pp. 277–279, Tidal Researches, p. 154.

† Phil. Mag., Vol. 1 (1876), pp. 182–187.
The Astronomical Journal, Vol. IX (1889), pp. 41–44.
The Astronomical Journal, Vol. X (1890), pp. 121–123.
The Astronomical Journal, Vol. IV (1856), pp. 173–176.

‡ Phil. Mag., Vol. 50 (1875), pp. 227–242.

§ Encyclopedia Britannica, article Tides.

‖ Annals of Math., Vol. 10 (1896), pp. 95–125.

106. In the chapter on the equilibrium of the sea he finds that—

The equilibrium of the sea is stable, if its density be less than the mean density of the earth.
If the density of the sea exceed the mean density of the earth, its figure ceases to be stable in many cases.

In the chapter on particular circumstances of each port he finds that—

The oscillations of the second kind cannot vanish, for the whole earth, except in the single case where the depth of the sea is constant. . . .
No admissible law of the depth of the sea can make oscillations of the third kind vanish in all parts of the earth.

At the end of § 15, Book IV, he says:

The irregularity of the depth of the ocean, the manner in which it is spread over the earth, the position and declivity of the shores, their connexions with the adjoining coasts, the currents, and the resistances which the waters suffer, cannot possibly be submitted to an accurate calculation, though these causes modify the oscillations of this great fluid mass. All we can do is to analyze the general phenomena which must result from the attractions of the sun and moon, and to deduce from the observations such data as are indispensable, for completing in each port the theory of the ebb and flow of the tides. These data are the arbitrary quantities, depending on the extent of the surface of the sea, its depth, and the local circumstances of the port.

At this point he returns to an empirical or modified equilibrium theory, taken in connection with a dynamical principle which he here lays down, viz.:

The state of a system of bodies, in which the primitive conditions of the motion have disappeared by the resistances it suffers, is periodical, like the forces which act on it.

Knowing the terms of the potential to be simply harmonic, and having found the terms of the component forces to be of the same character, Laplace concludes, by an argument based upon the introduction of another equal sun, that the oscillation is simply harmonic. Consequently the expression

$$y=\frac{BL}{r^3}\cos(2nt+2\varpi-2\psi-2\lambda), \tag{231}$$

B and λ being two constants dependent upon the particular port, gives the law by which the solar tide rises and falls, the sun being in the equator.

By considering a tide propagated up a canal having two mouths, Laplace notes that the phase and amplitude of the resulting tide are dependent upon the rapidity of the motion of the body in its orbit; i. e., upon the period of the oscillation, and so

Therefore the ratio of the coefficients $\frac{BL}{r^3}$ and $\frac{B'L'}{r'^3}$, given by observation of the tides, is not exactly that of the forces $\frac{L}{r^3}$ and $\frac{L'}{r'^3}$. . . . . .

But since the constant quantities B and λ would be the same for the sun and moon, if the motions of these bodies were equal, it is natural to suppose that their differences are proportional to the differences of these motions; therefore we shall adopt this hypothesis, and we shall find that it satisfies the observations with remarkable exactness. Hence we shall put

$$\lambda=O-mT; \tag{232}$$

$$B=P(1-2mQ); \tag{233}$$

*O, T, P and Q being the same for the sun and moon.**

In § 19, Bk. IV, Laplace investigates inequalities in the motions of the sun and moon moving in the equator by means of fictitious bodies. He says:

The most important of these terms is that depending on the angle

$$2nt-2mt+2\varpi, \tag{234}$$

which produces the ebb and flow of the tide, in the case we have just examined, where the sun is supposed to move in the plane of the equator, and to be always at the same distance from the earth. The other terms may be considered as the result of the actions of as many other bodies, moving uniformly in the plane of the equator. Combining together the partial ebb and flow, corresponding to each of these bodies, we shall obtain the total ebb and flow arising from the action of the sun.

* Ferrel early came to the conclusion that the change in the tidal coefficients due to a change of velocity of the disturbing body in right ascension is not generally proportional to the amount of change in this velocity.

If we put l for the mass of the fictitious body, whose action produces the term depending on the angle $2nt-2qt+2\varepsilon$, and a for its distance from the centre of the earth; we shall have

$$\frac{3}{2}\frac{l}{a^3}=k, \qquad \text{or } \frac{l}{a^3}=\frac{2}{3}k. \tag{235}$$

We have seen in the preceding article, that the sun being supposed to move uniformly in the plane of the equator, with an angular motion equal to mt, the part of the expression of the height of the sea, depending on the angle $2nt-2mt+2\varpi$, is equal to

$$P(1-2mQ)\frac{L}{r^3}\cos 2(nt-mt+\varpi-O+mT). \tag{236}$$

The constant quantities P, Q, O, T, are the same for all the heavenly bodies, whatever be their proper motions; therefore the sum of the partial tides, arising from the action of all the bodies l, l', l'', &c., will be,

$$\Sigma P(1-2qQ)\frac{l}{a^3}\cos 2(nt-qt+\varepsilon-O+qT); \tag{237}$$

consequently it will be,

$$\tfrac{3}{4}P\Sigma k\cos 2(nt-qt+\varepsilon-O+qT)$$

$$+\tfrac{3}{8}PQ\frac{d}{dt}\Sigma k\sin 2(nt-qt+\varepsilon-O+qT); \tag{238}$$

the differential being taken supposing nt to be constant. But by what precedes, we have

$$\Sigma k\cos 2(nt-qt+\varepsilon-O+qT)=\frac{3}{2}\frac{L}{r^3}\cos 2(nt+\varpi-\psi-\lambda); \tag{239}$$

the time t being decreased by T, in the variable quantities nt, ψ, r, of the second member of this equation, and $\lambda=O-nT$. Therefore the part of the height of the tide depending upon the action of the sun, and also upon the angle $2nt+2\varpi-2\psi$, with the preceding conditions, is represented by

$$P\frac{L}{r^3}\cos 2(nt+\varpi-\psi-\lambda)+PQ\frac{d}{dt}\left\{\frac{L}{r^3}\sin 2(nt+\varpi-\psi-\lambda)\right\}. \tag{240}$$

If we transfer to the moon what we have said relative to the sun, we shall find, that the part of the height of the tide depending upon the lunar action, and the rotatory motion of the earth, is

$$P\frac{L'}{r'^3}\cos 2(nt+\varpi-\psi'-\lambda)+PQ\frac{d}{dt}\left\{\frac{L'}{r'^3}\sin 2(nt+\varpi-\psi'-\lambda)\right\} \tag{241}$$

in which expression the time t must also be decreased by T. . . . . .

Introducing the declination and the part independent of the rotary motion of the earth, the general expression for the height of the tide is found to be

$$\alpha y=-\frac{1+3\cos 2\theta}{8g\left(1-\frac{3}{5\rho}\right)}\left\{\frac{L}{r^3}(1-3\sin^2 \mathrm{v})+\frac{L'}{r'^3}(1-3\sin^2 \mathrm{v}')\right\}$$

$$+A\left\{\frac{L}{r^3}\sin \mathrm{v}\cos \mathrm{v}\cos(nt+\varpi-\psi-\gamma)+\frac{L'}{r'^3}\sin \mathrm{v}'\cos \mathrm{v}'\cos(nt+\varpi-\psi'-\gamma)\right\}$$

$$+B\frac{d}{dt}\left\{\frac{L}{r^3}\sin \mathrm{v}\cos \mathrm{v}\sin(nt+\varpi-\psi-\gamma)+\frac{L'}{r'^3}\sin \mathrm{v}'\cos \mathrm{v}'\sin(nt+\varpi-\psi'-\gamma)\right\}$$

$$+P\left\{\frac{L}{r^3}\cos^2 \mathrm{v}\cos 2(nt+\varpi-\psi-\lambda)+\frac{L'}{r'^3}\cos^2 \mathrm{v}'\cos 2(nt+\varpi-\psi'-\lambda)\right\}$$

$$+PQ\frac{d}{dt}\left\{\frac{L}{r^3}\cos^2 \mathrm{v}\sin 2(nt+\varpi-\psi-\lambda)+\frac{L'}{r'^3}\cos^2 \mathrm{v}'\sin 2(nt+\varpi-\psi'-\lambda)\right\}. \tag{242}$$

In this expression the differentials must be taken supposing nt to be constant; and the time t must be diminished by a constant quantity T', in the terms multiplied by A, B; and by the constant quantity T, in the terms multiplied by P, Q; these constant quantities, as well as A, B, γ, P, Q, λ, must be determined, in each part, by observation.

107. Now observations made at Brest show that the terms in B and Q are small and may be neglected, and so the preceding formula becomes that resulting from the equilibrium theory.*

* See below; also under Ferrel.

This formula gives the height of the tide at any instant. [Laplace finds for the tide at Brest (Bk. IV, § 41)

$$xy = -0^{m}\cdot02745\,[i^3\,(1-3\sin^2 v + 3\,i'^3\,(1-3\sin^2 v')]$$

$$+0^{m}\cdot07179\,[i^3 \sin v \cos v \cos(v-66^\circ\,5')^{*}+3\,i'^3 \sin v' \cos v' \cos(v+\psi-\psi'-66^\circ\,5')]$$

$$+0^{m}\cdot78112\,[i^3\cos^2 v \cos 2(v-66^\circ\,5')+3\,i'^3\cos^2 v \cos 2(v+\psi-\psi'-66^\circ\,5')]. \quad (243)$$

Here v denotes the sun's hour angle; i, the ratio of the sun's mean distance to its actual distance.]

To find the times of high or low water all but the terms in P can be omitted, and we have upon equating $\frac{dy}{dt}$ to zero

$$\tan 2(nt+\varpi-\psi'-\lambda)=\frac{\frac{L}{r^3}\cos^2 v \sin 2(\psi-\psi')}{\frac{L'}{r'^3}\cos^2 v' + \frac{L}{r^3}\cos^2 v \cos 2(\psi-\psi')} \quad (244)$$

$$\text{Range of tide} = 2P\sqrt{\left(\frac{L}{r^3}\cos^2 v\right)^2+\frac{2L}{r^3}\cos^2 v\,\frac{L'}{r'^3}\cos^2 v' \cos 2(\psi'-\psi)+\left(\frac{L'}{r'^3}\cos^2 v'\right)^2} \quad (245)$$

$$\text{Range of tide near the } \begin{matrix}\text{syzygies}\\ \text{quadratures}\end{matrix} = y'' = 2P\left\{\frac{L}{r^3}\cos^2 v \pm \frac{L'}{r'^3}\cos^2 v'\right\}$$

$$\mp\frac{4P\frac{L}{r^3}\cos^2 v\,\frac{L'}{r'^3}\cos^2 v}{\frac{L}{r^3}\cos^2 v \pm \frac{L'}{r'^3}\cos^2 v'}\left\{(\psi'-\psi)^2+\tfrac{1}{8}q^2\right\}, \quad (246)$$

q being the variation of the arc $\psi'-\psi$ in the interval of two consecutive high waters near syzygy or quadrature; $\psi'-\psi$ is taken at a time of a low water, and so for the mean of two adjacent high waters

$$\tfrac{1}{2}[(\psi'-\psi-\tfrac{1}{4}q)^2+(\psi'-\psi+\tfrac{1}{4}q)^2]=(\psi'-\psi)^2+\tfrac{1}{8}q^2. \quad (247)$$

The last term of (246) is the $\begin{matrix}\text{decrease near the syzygies.}\\ \text{increment near the quadratures.}\end{matrix}$

The time of high water is also given by the equation

$$\tan 2(nt+\varpi-\psi-\lambda)=\frac{\frac{L'}{r'^3}\cos^2 v \sin 2(\psi'-\psi)}{\frac{L}{r^3}\cos^2 v+\frac{L'}{r'^3}\cos^2 v' \cos 2(\psi'-\psi)}, \quad (248)$$

which near the syzygies may be written

$$nt+\varpi-\psi-\lambda=\frac{(\psi'-\psi)\frac{L'}{r'^3}\cos^2 v'}{\frac{L'}{r'^3}\cos^2 v'+\frac{L}{r^3}\cos^2 v}; \quad (249)$$

similarly near the quadratures

$$nt+\varpi-\psi-\lambda=\frac{(\psi'-\psi)\frac{L'}{r'^3}\cos^2 v'}{\frac{L'}{r'^3}\cos^2 v-\frac{L}{r^3}\cos^2 v}. \quad (250)$$

These expressions give the retardation of the tide near the syzygies and near the quadratures.

* Sexagesimal.

Observations show that at Brest

$$\frac{L'}{r'^3}=3\frac{L}{r^3}, \tag{251}$$

very nearly (§ 31, Bk. IV). With this assumption, the above formulæ, all of which follow from the equilibrium theory, enable one to verify the theoretical part of the statements here quoted:

We shall now recapitulate in a few words the principal phenomena of the tides, and their relation with the laws of universal gravitation. We have generally considered these phenomena near their *maxima* and *minima*, and we have divided them into two classes; the one relative to the heights of the tides, the other relative to the hours of the tides, and their intervals. We shall now examine separately these two classes of phenomena.

The heights of the tides in each port, at their *maximum* near the syzygies, and at their *minimum* near the quadratures, are the *data* of the observations, which best show the ratio of the actions of the sun and moon upon the tides; and by means of this ratio, the various phenomena of the tides, which result from the theory of universal gravitation. One of these phenomena, which is very proper for the verification of the theory, is the law of the diminution of the tides from the time of *maximum*, or the law of their increase from the *minimum*. We have seen in [2593′, 2716],* that the theory of gravity accords perfectly with the observations in this respect.

These laws of the decrease and increase of the tides vary with the declinations of the sun and moon: we have seen in [2590, 2592], that *their decrease near the syzygies of the equinoxes, is to their corresponding decrease near the syzygies of the solstices, in the ratio of* 13 *to* 8; and that this result is conformable to the theory of gravity.† We have seen likewise, [2717′, 2718′], that *the increment of the tides, counted from the minimum near the quadratures of the equinoxes, is to the corresponding increment near the quadratures of the solstices, as* 2 *to* 1; and that the theory of gravity gives nearly the same ratio.‡

According to this theory, *the height of the total tide, at its maximum near the syzygies of the equinoxes, is to the corresponding height near the syzygies of the solstices, nearly as the square of the radius is to the square of the cosines of the declinations of these bodies near the solstices;* and we have seen in [2590, 2592], that this differs but little from the result of observations. By the same theory, *the excess of the heights of the total tides, in their minimum, near the quadratures of the solstices, above their corresponding heights, near the quadratures of the equinoxes, is the same as the excess of the heights of the total tides in their maximum, near the syzygies of the equinoxes, above their corresponding heights near the syzygies of the solstices;* and we have seen [2590, 2592, 2717′, 2718′] that this is exactly conformable to the theory.‡

The influence of the moon upon the tides *increases, by the principle of gravity, as the cube of its parallax;* and by [2608, 2623, &c], this is so exactly conformable to observation, that we might have deduced from observations the law of this influence.

The phenomena of the intervals of the tides accord equally well with the theory, as those of their heights. According to the theory, *the daily retardation of the tides, at their maximum, near the syzygies, is only about half what it is at their minimum, near the quadratures.* In the first case it is nearly 27′ § [2757], and in the last case 55′ [2831]. We have seen in [2745, 2809], that the observations differ but little from this result of the theory.‖

The retardation of the tides varies with the declinations of the bodies. According to the theory, it is greater in the syzygies of the solstices, than in those of the equinoxes, in the ratio of 8 *to* 7. *In the quadratures of the equinoxes, it is greater than in those of the solstices, in the ratio of* 13 *to* 9. We have seen in [2777, 2839′], that the observations give nearly the same ratios.‖

The distance of the moon from the earth has an influence on the retardation of the tides. According to the theory, an increase of one minute in the semi-diameter of the moon, produces an increase of 258″ [2783] *in this retardation, in the syzygies, and only* 90″ [2847] *in the quadratures;* and we have seen in [2847], that this agrees with the observations, and conforms in every respect, relatively to the tides, to the law of universal gravitation.¶

We have treated fully on the ebb and flow of the sea; because it is one of the results of the attraction of the heavenly bodies most obvious to us, and the law which regulates it can be examined at every moment. It is hoped that the theory of the tides here given will induce observers to attend to the subject, in ports which, like Brest, are well situated for such observations. Accurate observations, continued during a period of the revolution of the moon's nodes, might fix with precision the elements of the theory of the ebb and flow of the tide, and perhaps make sensible the small oscillations depending on the inverse ratio of the fourth power of the distance of the moon from the earth, which have heretofore been confounded with the errors of the observations.**

---

* References marked with brackets here refer to Bowditch's Laplace.

† Last term of equation (246).

‡ Equation (246).

§ 27 minutes decimal time = 39^m ordinary time; and 55 decimal minutes = 79 ordinary.

1^h dec. = $\frac{1}{10}$ day = 2^h·4 ordinary.
1^m dec. = $(\frac{1}{100})^h = \frac{1}{10000}$ day = 1^m·44 ordinary.
1^s dec. = $(\frac{1}{100})^m = \frac{1}{1000000}$ day = 0^s·864 ordinary.

1° = $\frac{1}{100}$ rt. angle = 0·9 degree, sexagesimal.
1′ = $(\frac{1}{100})^\circ = \frac{1}{10000}$ rt. angle = 0·54 minute of arc, sexagesimal.
1″ = $(\frac{1}{100})' = \frac{1}{1000000}$ rt. angle = 0·324 second of arc, sexagesimal.

‖ Equations (248)–(250).

¶ Equations (248)–(250).

** The quotations from Bk. IV follow Bowditch's translation and italicizing.

108. In the thirteenth book, Laplace writes the semidiurnal tides in the form

$$\frac{AL}{r^3}\cos^4\tfrac{1}{2}\varepsilon\cos(2nt+2\varpi-2mt-2\lambda)$$

$$+\tfrac{1}{2}\frac{BL}{r^3}\sin^2\varepsilon\cos(2nt+2\varpi-2\gamma)$$

$$+\frac{A'L'}{r'^3}\cos^4\tfrac{1}{2}\varepsilon'\cos(2nt+2\varpi-2m't-2\lambda')$$

$$+\tfrac{1}{2}\frac{BL'}{r'^3}\sin^2\varepsilon'\cos(2nt+\varpi-2\gamma) \qquad (252)$$

when the constants A, A', B, γ, λ, λ' are known only from observation.*

At a time T when the cosine of the first angle is unity, and the sun is distant mT from the equinox, the range of the solar tide is

$$2A\frac{L}{r^3}\cos^4\tfrac{1}{2}\varepsilon+B\frac{L}{r^3}\sin^2\varepsilon\cos 2mT. \qquad (253)$$

If p denotes the square of the cosine of the declination at syzygies,

$$\cos^2 v = p \doteq 1-\frac{\sin^2\varepsilon}{2}+\frac{\cos 2mT}{2}; \qquad (254)$$

and since

$$\cos^4\tfrac{1}{2}\varepsilon \doteq \frac{1+\cos^2\varepsilon}{2}, \qquad (255)$$

the above may be written

$$2A\frac{L}{r^3}p-(A-B)\frac{L}{r^3}\sin^2\varepsilon\cos 2mT. \qquad (256)$$

Similarly, the high water of the lunar tide may be written

$$2A'\frac{L'}{r'^3}p'-(A'-B)\frac{L'}{r'^3}\sin^2\varepsilon'\cos(2m'T-2\delta), \qquad (257)$$

δ being the right ascension of the "intersection."

If P, Q denote the sums of the squares of the cosine of the sun's declinations at equinoctial and solstitial syzygy, respectively, and P', Q' similar quantities for the moon, then the value of i ranges at equinoctial syzygies is

$$2i\alpha = 2A\frac{L}{r^3}P+2A'\,1{\cdot}02734\frac{L'}{r'^3}P'$$

$$-(A-B)\frac{L}{r^3}(P-Q)-(A'-B)\,1{\cdot}02734\frac{L'}{r'^3}(P'-Q') \qquad (258)$$

where 1·02734 is written instead of unity because the inequality of variation increases the tide-producing force of the moon in the syzygies by 2·734 per cent.

For solsticial syzygies

$$2i\alpha' = 2A\frac{L}{r^3}Q+2A'\,1{\cdot}02734\frac{L'}{r'^3}Q'$$

$$+(A-B)\frac{L}{r^3}(P-Q)+(A'-B)\,1{\cdot}02734\frac{L'}{r'^3}(P'-Q') \qquad (259)$$

2α may be supposed to refer to equinoctial syzygy and $2\alpha'$ to solstitial syzygy.

For equinoctial quadratures

$$2i\alpha'' = 2A'\,0{\cdot}97266\frac{L'}{r'^3}Q_1'-2A\frac{L}{r^3}P_1$$

$$+(A'-B)\,0{\cdot}97266\frac{L'}{r'^3}(P_1'-Q_1')+(A-B)\frac{L}{r^3}(P_1-Q_1). \qquad (260)$$

*The terms in B are solar and lunar K_2, the orbits being circular. ε, ε' denote inclinations of the orbits to the plane of the equator.

For solstitial quadratures

$$2\,i\alpha''' = 2\,A'\,0{\cdot}97266\,\frac{L'}{r'^3}\,P_1' - 2\,A\,\frac{L}{r^3}\,Q_1$$

$$-(A'-B)\,0{\cdot}97266\,\frac{L'}{r'^3}(P_1'-Q_1') - (A-B)\,\frac{L}{r^3}(P_1-Q_1). \tag{261}$$

Suppose the values $2\,i\alpha$, $2\,i\alpha'$, $2\,i\alpha''$, $2\,i\alpha'''$ to be known from observation, and P, Q, P', Q', . . . to be taken from the almanac; the unknown quantities are

$$A\frac{L}{r^3},\ A'\frac{L'}{r'^3},\ B\frac{L}{r^3},\ B\frac{L'}{r'^3}. \tag{262}$$

If the two latter could be found, then the ratio $\frac{L'}{r'^3}\Big/\frac{L}{r^3}$ would become known; and, taking from astronomy the distances of sun and moon, the relative mass of the moon (L') would become known. But $B\frac{L}{r^3}$, $B\frac{L'}{r'^3}$ cannot be determined because we cannot eliminate the one without eliminating the other. Accordingly Laplace assumes, as in his fourth book,*

$$A = (1+mx)\,B,\quad A' = (1+m'x)\,B, \tag{263}$$

wherein m/m' = sun's motion ÷ moon's motion = 0·0748. From these relations and the four observation equations, the four unknown quantities and $m'x$ or mx become known, and so the ratio $\frac{L'}{r'^3}\Big/\frac{L}{r^3}$.

For Brest Laplace finds

	New observations (1807–1822)	Old observations (1711–1716)
EQUINOCTIAL SYZYGIES.		
	met.	*met.*
$48\cdot\alpha$ =	153·711	150·235
$48\cdot\beta$ =	3·388	3·163
SOLSTITIAL SYZYGIES.		
$48\cdot\alpha'$ =	134·325	132·371
$48\cdot\beta'$ =	2·078	1·945
EQUINOCTIAL QUADRATURES.		
$48\cdot\alpha''$ =	56·561	58·033
$48\cdot\beta''$ =	7·744	7·495
SOLSTITIAL QUADRATURES.		
$48\cdot\alpha'''$ =	74·769	75·517
$48\cdot\beta'''$ =	3·394	3·410

$$m'x = 0{\cdot}25291$$

$$\frac{L'}{r'^3}\Big/\frac{L}{r^3} = 2{\cdot}35333$$

[old observations gave about 3]

Mass of moon = 1/74·946.

Age of phase inequality in these four cases:

d. 1·48013, 1·54684 } *d.* 1·51349 = the quantity by which maximum tides follow syzygy;

d. 1·50964, 1·51269 } *d.* 1·51116 = the quantity by which minimum tides follow quadrature.

* Cf. equation (233); also Ferrel, United States Coast Survey Report, 1870, pp. 190–199.

He adds that *the interval from syzygy to maximum tides and the interval from quadrature to minimum tides may be regarded as equal.* This is in accord with the old observations, which gave 1·50724 and 1·5077 (Bk. IV, §§ 24, 31).

[The variation in height (of which 6 is a coefficient) near spring or neap tides is as the square of the time from them.]

In the fifth chapter, Laplace writes the diurnal portion of the sun's disturbing force in the form

$$\frac{3L}{2r^3}\sin\theta\cos\theta\left\{\begin{matrix}\sin\varepsilon\sin(nt+\varpi)\\ -\sin\varepsilon\sin(nt+\varpi-2\phi)\end{matrix}\right\}, \tag{264}$$

thus bringing to light the two components which have since been styled solar K_1 and P_1. Similarly the lunar attraction gives rise to two waves since styled lunar K_1 and O_1. He determines the amplitude of the diurnal tide by means of observations around the solsticial syzygies. He finds its range to be $0^{met}\cdot2134$, while that of the semidaily tide is $5^{met}\cdot60$, the equilibrium theory giving $0^{met}\cdot674$ and $0^{met}\cdot350$, respectively; also that the high water of the dirunal wave precedes that of the semidirunal by $0^{d}\cdot095$.* He says:

> Thus, by the effect of the rotation of the earth and accessory circumstances, the diurnal tide is reduced to nearly one-third [of its theoretical value], while the semidiurnal tide becomes multiplied by 16. However, this great difference ought not surprise us, if we consider that, by Book IV, the rotation of the earth destroys the diurnal tide in a sea everywhere of equal depth; and that if the depth of the sea is $\frac{1}{7\frac{1}{2}\pi}$ of the terrestrial radius, or about 9,000 metres, the heights of the semidiurnal tide in the syzygies is 11 metres.

In the sixth chapter he detects a tide depending upon the fourth power of the moon's parallax and having a period of one-third lunar day.

---

* From recent harmonic analyses, $2(K_2+O_1+P_1)=1.00$ foot $=0.30$ meter; $M_2{}^{\circ}-K_1{}^{\circ}-O_1{}^{\circ}=66^{\circ}=2.3$ hours $=0.09$ day.

CHAPTER VIII.

WORK SINCE THE TIME OF LAPLACE.

109. *Dr. Thomas Young* (1773–1829). The tidal theory of Dr. Young is contained in the Encyclopædia Britannica, 8th edition; article, Tides.*

He seems to have been the first to distinctly suggest an extensive system of cotidal lines. But in reference to it he adds:

> If, however, we actually make such an attempt, we shall soon find how utterly inadequate the observations that have been recorded are, for the purpose of tracing the forms of the lines of contemporary high water with accuracy or with certainty although they are abundantly sufficient to show the impossibility of deducing the time of high water at any given place from the Newtonian hypothesis, or even from that of Laplace, without some direct observation.

Somewhat after the manner of Euler he first treats the tidal problem by the equilibrium theory, using the horizontal component of the tidal force. He does not fail to notice the necessity of taking into account the attraction due to the high-water regions when the density of the water is considerable. He states as theorems that the (horizontal) disturbing force of a body varies as the sine of twice its altitude; that an oblong spheroid with its axis passing through the disturbing body is a form of equilibrium; that the tide will be propagated with a velocity equal to the velocity acquired by a body falling through half the depth of the fluid (Lagrange's rule); that "the oscillations of the sea and of lakes, constituting the tides, are subject to laws exactly similar to those of pendulums . . . . . ." Besides these he states theorems relating to the disturbing attraction of the meniscus of water, to the reflection of waves, and to certain differential equations.

He introduces fluid friction into his equations, generally regarding it as proportional to the square of the velocity. The arbitrary constants entering into his solution, being assumed at pleasure give possible explanations for phenomena observed in various places: such as unusually large or small tides; also, whether high water or low water should occur at the time of transit. He finds that the "age" of the tide may be explained either by the difference of the velocities of sun and moon, or by the resistance due to friction. In fact, he was the first to mention the latter explanation. His equations refer to a single oscillating particle without reference to the ocean as a whole, and so their solution must be regarded as giving results analagous to nature, but not as being a complete solution of the tidal problem. This manner of treating the subject, while open to criticism from a theoretical point of view, is in line with most working hypotheses and especially that underlying the harmonic analysis. In further anticipation of this analysis, it may be noted that he gives some developments of tidal forces, and that he makes the following significant statement:

> There is indeed little doubt, that if we were provided with a sufficiently correct series of minutely accurate observations on the tides, made, not merely with a view to the times of low and high water, but rather to the heights at the intermediate times, we might by degrees, with the assistance of the theory contained in this article, form almost as perfect a set of tables for the motions of the ocean as we have already obtained for those of the celestial bodies, which are the more immediate objects of the attention of the practical astronomer. There is some reason to hope that a system of such observations will speedily be set on foot by a public authority; and it will be necessary, in pursuing the calculation, on the other hand, to extend the formula for the forces to the case of a sea performing its principal oscillation in a direction oblique to the meridian, as stated in the beginning of this section.

The results of *Weber* brothers' experiments on waves are published in their treatise entitled Wellenlehre auf Experimente gegründet (1825). In this book reference is made to nearly all previous researches on waves.

---

*This article was written in 1823. The first complete mathematical sketch of his theory was published in Nicholson's Journal, Vol. 35 (1813), pp. 145 and 217. Both articles may be found in his Miscellaneous Works, Vol. II.

110. *Henry R. Palmer.** This engineer has given an account of a self-registering tide gauge which he designed and used in recording tides in the port of London.

A hollow iron float rises and falls with the tide within a protected well or float box. A chain passes over a barrel or float wheel. Two ends of the chain rest upon the ground, "so that the weight of the chain on each side of the barrel is always equal." Shafting connects the float wheel with a pinion which, working in a rack, moves the recording point or pencil. The record is made upon paper passing over a large drum, and wound up on a smaller one. Hourly impressions, in the figure of an arrow and along the margin of the sheet, are made by means of a punch actuated by a hammer and cam wheel. The direction of the arrow is that of a weather vane on the top of the tide house. He proposes a counterpoise equal to the resistance of the friction of those parts which the clock has to move.

In 1833 *George Rennie* communicated to the British association a paper entitled "Report on the progress and present state of our knowledge of hydraulics as a branch of engineering." The portion of the paper (B. A. A. S. Report, 1834, pp. 415 et seq.) concerning the flow of rivers is of considerable interest, especially from an historical point of view.

111. *Sir John W. Lubbock* (1803–1865).

The writings of Lubbock on tides are, for the most part, contained in the Philosopical Transactions and British Association Reports covering the period 1831 to 1837. Besides these papers may be mentioned his account of Bernoulli's paper, also An Elementary Treatise on Tides (1839).

In his first paper on the tides of London † he discusses high-water observations extending over 19 years, beginning with 1808. He adopts the (half) hour of transit as one of the arguments of tabulation and for the other, according to the inequality concerned, the time of year (month), moon's horizontal parallax, or declination. He also separates the upper and lower transits for the month of June, thus obtaining the diurnal inequality for that month for each hour of transit. In bringing out the various inequalities he makes use of all observed tides and not of certain groups as did Laplace. Tabulations according to his method have been quite extensively used in the formation of the tide tables for the coasts of Great Britain. Whewell, Ferrel, and others have, with certain modifications, followed this method first laid down by Lubbock.

Upon consulting available authorities, he prepares two charts, one for the coasts of Great Britain and one for the world; on these are written the hour of tide (at full and change) in Greenwich time, also in local time (i. e., the establishment). Although he does not actually draw cotidal lines, he introduces the term "cotidal line" which he defines as a "series of points at which it is high water at the same instant."‡

Lubbock early reaches the conclusion that the constant implying the moon's mass so varies from place to place that the moon's mass as determined therefrom and after the manner of Laplace, must be unreliable. He also finds that the variation in the retard from place to place is sometimes difficult to account for.

The London high waters being deficient in diurnal inequality it is from the Liverpool tides (Phil. Trans., 1836) that Lubbock deduces the magnitude of this inequality. He tabulates it with reference to the hour of transit and the time of year (and so for the various declinations of the moon). He finds the maximum value to occur about six days after the extreme declination of the moon and the difference in high-water heights there to be about 1 foot. He says: "The diurnal inequality in the *interval* appears to be insensible [at Liverpool]."

The observed corrections for parallax and declination do not at first agree with the theory of Bernoulli. But Lubbock points out the cause of this disagreement in a paper read before the Royal Society, June 16, 1836. His results previously published were obtained by referring the tides to the immediately preceding transit; but in this and in subsequent papers, such a preceding transit is used as will nearly allow for the retard of the tide. The parallax and declinational corrections then conform much more closely to theory. He says:

> The variations in the interval between two successive transits of the moon are, in fact, of the same order in amount as those in the interval between the moon's transits and the time of high water due to the variations in

* "Description of a graphical register of tides and winds." Phil. Trans., 1831, pp. 209–213. Read March 10, 1831. It was recording the London tides as early as 1828. (Fig. 40, Airy, Tides and Waves.)

† Phil. Trans., 1831, pp. 379–415.

‡ Ibid., p. 382.

magnitude of the attractive forces; and when the interval between the time of high water and the moon's transit *immediately preceding* is considered (at least on our coasts) the variations from both these causes are mixed up together.

Concerning the connection between the height of the barometer and that of the tide, he says:

M. Daussy has ascertained that at Brest the height of high water varies inversely as the height of the barometer, and that the ocean rises 0·223 metre, or 8·78 inches, for a depression of 0·0158 metre, or 0·622 inch, in the barometer. . . . . .

We may say roughly that at Liverpool a fall of one tenth of an inch in the barometer raises the tide an inch, *cæteris paribus*. The time of high water appeared not to be much affected.

It appears that north-easterly winds at Liverpool depress the tide, and south-westerly winds raise it. As northerly winds raise the barometer and southerly winds depress it, it will be difficult, if not impossible, to separate the effect of winds and that of the variation in the pressure of the atmosphere from each other.

But if the tide originates at a very remote distance on the surface of the earth, the atmospheric pressure *there* has probably more influence upon the phenomena than the pressure in our vicinity. This difficulty is diminished by the circumstance that the great fluctuations of the barometer are not rapid, and that the variations in the pressure of the atmosphere are extremely extensive. It will still, however, I apprehend, be very difficult to distinguish between the effects arising from variations in the atmospheric pressure, and those arising immediately from the effect of wind, as I have before remarked.*

Lubbock resumes this subject in the Transactions for 1837, p. 97, and for 1838, p. 103.†

In a paper contained in the Transactions for 1837, Lubbock assigns the letters A, B, C, D, E, F to the transits upper and lower in the order of their occurrence, F marking the one immediately preceding London high water.

112. *Dr. William Whewell* (1794–1866).

Whewell wrote extensively on tides and their attendant phenomena. His most important papers on these subjects are contained in the Philosophical Transactions and the reports of the British Association between the years 1833 and 1854. They contain much information about tides all over the world. His discussions or reductions are generally along the lines laid down by Lubbock. He was the first to draw cotidal lines,‡ although Lubbock had already marked the cotidal hours upon two charts.

He was at the head of a movement to obtain simultaneous observations over as large a portion of the earth as possible. In 1834 he succeeded in obtaining a fortnight of such observations around the British Isles. But between June 8 and June 28, 1835, simultaneous observations were made from Louisiana to Nova Scotia and from the Strait of Gibraltar to North Cape. The results are published on pages 308 to 341 of the Transactions for 1836. These observations were upon low as well as high water. Later, in the Transactions for 1847 and 1851, he strongly recommends a similar procedure for the Pacific Ocean. The simultaneous observations threw much light upon the form of cotidal lines, showing, among other things, that in general these lines meet the shore at very acute angles.

Several descriptive terms, not all of which have come into general use, are due to Whewell. Of these may be mentioned the following, together with the year of publication in which they first occur: Points of convergence, points of divergence, time of slack water *vs.* time of high water, semimenstrual inequality, corrected establishment, vulgar establishment, age of the tide (Phil. Trans., 1833); coefficient of the semimenstrual inequality (Phil. Trans., 1834); retroposition, lunitidal interval, mean lunitidal (Phil. Trans., 1836); incidence [of diurnal inequality] (B. A. A. S. Report, 1851).

Whewell treats at some length the question of diurnal inequality. He points out the fact that the age of this inequality may vary very rapidly from place to place and that it may be quite different from the age of the phase or parallax inequality. Hence no one age is common to all inequalities. The simultaneous observations of June, 1835, already alluded to, afforded a large variety of tides, and showed the prevalence of this inequality on the eastern coast of America and the outer coast of Europe. His work pertaining to this subject is not very accurate, because

* Phil. Trans., 1836, pp. 219–221.

† Cf. T. G. Bunt, B. A. A. S. Report, 1841, pp. 30–33; J. C. Ross, Phil. Trans., 1854, pp. 285–291; Airy, Tides and Waves, Arts. 572, 573; Ferrel, U. S. Coast Survey Report, 1871, pp. 93–99; Schmick, Das Flutphänomen; Lentz, Fluth und Ebbe; T. L. Ortt, Nature, Vol. 56 (1897), pp. 80–84.

‡ Phil. Trans., 1833, 1836, 1848. See under Dr. Young.

he considers the diurnal inequality dependent almost wholly upon the moon, and so the sun's effect is not properly allowed for.

Whewell describes (Phil. Trans., 1837) a graphic method for obtaining the diurnal wave. The method is applicable only when its range is small in comparison with the mean range of tide. It will be readily recognized as a forerunner of Pourtales's method. With the times of the tides as abscissæ, and the inequalities in the individual high or low water heights as ordinates, points are located through which a sinuous curve is passed by inspection. The high-water inequality curve properly combined with a similar one for the low waters gives the diurnal wave as it appears from day to day. The following are some of his conclusions in regard to the diurnal inequality:

The diurnal inequality depends upon the moon being north or south of the equator; its maximum *corresponds* to (but is not necessarily simultaneous with) the moon's greatest declination; and the period of its vanishing corresponds in like manner with the time of the moon passing the equator. Between periods corresponding to two such passages, the inequality increases from 0 to a maximum, and decreases to 0 again; after which it again increases.*

The different epoch [age] of the diurnal inequality in different parts of the world is a very curious fact; and the more so, since it is inconsistent with the mode hitherto adopted of explaining the circumstances of the tides by conceiving a tide-wave to travel to all shores in succession . . . It would seem as if the tidal phenomena on this side of the Atlantic corresponded to an epoch (of the equilibrium-theory) two or three days later than the same phenomena in America; and we may perhaps add, that different kinds of phenomena do not appear to travel at the same rate.†

The diurnal inequality [in time] is also very large in places where the tide has to run far inland, as in the Sound of Christiania in Norway, and in the Zuyder Zee in Holland.‡

We cannot know, except by observation, to what transit of the moon any tide *belongs;* but it is manifest that if we begin with any tide, the tides must belong alternately to south and north transits, and therefore the above alternation of greater and smaller tides, as the moon has north or south declination, must come into view.§

On the east coast of America, the changes of this inequality appear to be contemporaneous with the corresponding changes of the moon's declination, and the epoch is *zero.* On the coasts of Spain, Portugal, and France, it is successively *two* and *three days.* And this is quite consistent with the fact that this epoch is *four* days on the coast of Cornwall and Devonshire, *five* days at Bristol, *six* at Liverpool, and *twelve* at Leith.‖

It is easy to conceive the diurnal inequality carried a little further than it is at Singapore; so that at a certain stage of it the alternate tides would vanish. This is equivalent to supposing the highest low water and the lowest high water to have the same height.

There are statements of navigators respecting various places at which there is "only one tide in twenty-four hours." From what has been said it appears that this may happen during a part of each semilunation [half-tropical month] by the effect of the inequality now under consideration, but that it cannot in this way be constantly the case.¶

Using the phrases which have previously been employed on this subject, the *epoch* of the diurnal inequality is zero, and the effect of the moon's declination reaches Petropaulofsk without any delay or retardation.

But this view of the laws of the tides at this place, which might otherwise be accepted without difficulty, is extremely perplexed and interfered with by the other parts of the diurnal inequality,—the inequality of heights at high water and of times of low water. For though these inequalities are not so large or so regular as the others, still they are sufficiently marked and steady to allow their laws to be seen beyond doubt. And it appears, not only that the epoch of these parts of the inequality does not agree with that of the others, but that these two inequalities *alternate* with the other two, vanishing when the other reach their maxima, and showing their maxima when the others vanish.

This is a very perplexing circumstance; for we cannot doubt that the diurnal inequality depends upon the moon's not moving in the equator; and therefore, how this inequality should affect the height of high water and the time of low water most, at that period at which the moon is in the equator, it is difficult to conceive.**

As I have shown in former memoirs, we may represent the usual diurnal inequality at any place as the effect of a tide wave arriving at the shore once a day and superimposed upon the semidiurnal tide wave. We are naturally led to ask whether such a mode of representation is applicable to the tides now under consideration. The features which the diurnal inequality exhibits at Petropaulofsk are not, for the most part, inconsistent with such a representation. Thus, that the inequality should affect high water and low water very differently is easily explained. Nor is there any difficulty in accommodating the hypothesis of the diurnal wave to one of the most curious of the laws which we have discovered; namely to this, that the inequality affects in the largest degree the *time* of high water and the *height* of low water.††

---

* Phil. Trans., 1836, pp. 301–302.
† Ibid., p. 304.
‡ Ibib., 1836, p. 305.
§ Ibib., 1837, p. 76.
‖ Ibib., 1837, p. 81.
¶ Ibib., p. 83.
** Ibib., 1840, p. 162.
†† Ibib., p. 165.

On page 84, Phil. Trans., 1837, Whewell reaches the important conclusion that the mean height of the sea (half-tide level), as determined by the four tides of a day, is nearly constant, even where the diurnal inequality is large; also that this plane is preferable to such a plane as mean low water or mean high water.

It appears that in all these cases the mean height of the sea is very nearly constant. This is most remarkable at Singapore, where, though the successive low waters often differ by six feet, the mean level only oscillates through a few inches. At Plymouth the mean level is not quite so steady. The fact is, that at that port the low water varies more by the difference of springs and neaps than the high water does; and hence the mean level slightly follows the low water, and is lowest at spring tides, and highest at neap tides, or perhaps more exactly a day or two later.

"The level of the sea at low water," a phrase sometimes used by surveyors, is altogether erroneous, and may lead to material error. From the instances just quoted (and indeed from the nature of the case) it is certain that the mean height of the sea is far more nearly constant than low or high water, under whatever assumed conditions. A *level surface* drawn from any point (that is a surface of *stagnant* water) would probably be nearly parallel to the points of mean water at different places. This becomes more manifest when we consider that at places near each other the tide often differs greatly in amount. At St. Davids Head in Pembrokeshire the range of the tides is near thirty feet; on the opposite coast of Ireland it is only two or three: if the sea were level at low water the difference of the mean heights on the two sides of the Channel (which is only about fifty miles) would be fourteen feet. Such an average elevation of one side of a narrow sea above the other is quite inconsistent with the laws of fluids.*

In the Transactions for 1838, Whewell notes the effect of taking various anterior transits; and, although he finds that Transit B does well for the coast of Europe, he says:

We may, however, observe that we do not in this way obtain an exact agreement of observation and theory, even with regard to the semimenstrual inequality. It has appeared from Mr. Lubbock's researches respecting the Liverpool tides,† that while the Transit A gives a very exact agreement of the theoretical and observed times, we must take a still earlier transit if we would obtain this agreement with respect to the heights. Nor does that selection of a transit which best represents the semimenstrual inequality, bring out an agreement with theory in the parallax and declination corrections, as we shall see. We must allow, therefore, that though there appear to be, in the actual laws of the tides, inequalities *corresponding* to all these which arise from the supposition of the equilibrium-tide of an anterior epoch transmitted along the ocean to our shores, we cannot so assume the epochs to produce all the inequalities at once. The epoch is of one value for the times, of another for the heights; different again for the parallax correction, and again different for the effect of declination.

In the second volume of his History of the Inductive Sciences, Whewell gives a section on the application of the Newtonian theory to the tides,‡ and earlier in the same volume some account of the equilibrium and motion of fluids.§

In the Philosophical Transactions for 1850, Whewell notices a graphic method for obtaining the range of tide corresponding to each hour of the moon's transit. A triangle having two of its sides proportional to the ranges of the solar‖ and lunar¶ waves, respectively, and the supplement of the enclosed angle twice the difference in right ascension of sun and moon as given by the hour of transit, the remaining side of the triangle is proportional to the resultant range of tide. This method is given in the Manual of Scientific Enquiry, together with the angles showing the priming and lagging of the resultant tide.

The later writings of Whewell place little confidence in cotidal lines except near the shores. The B. A. A. S. Report for 1854, II, page 28, says:

The result is that we are led to consider whether the oceanic tides may not be produced by a great oscillation of the ocean, the littoral tides being derived from them and propagated by cotidal lines like waves along canals. [This view was proposed by Captain Fitz Roy as well as Dr. Whewell several years ago.]

It may be added that Dr. Young had already held a similar view regarding the oscillation of the ocean. In fact a bodily swinging of the ocean is in accordance with the views of Plato, Galileo, and others.

113. In the appendix to Volume II of the Narration of the Surveying Voyages of His Majesty's Ships Adventure and Beagle, between 1826 and 1836, *Capt. Robert Fitz Roy* has set down general notions about the tides, and he has employed them to help explain what is observed in diverse places.

---

* Phil. Trans., 1837, p. 84.
† Ibid., 1836, Part II.
‡ Ed. 1847, pp. 253-259.
§ Pp. 62-72; 116-128.
‖ $\frac{Sg-Np}{2}$
¶ $\frac{Sg+Np}{2}$

He believes the tides to be largely due to the swinging of a sea when slightly displaced from its position of equilibrium, the primary causes of such displacement being the sun and moon acting in accordance with Newton's law.

This theory naturally opposes the idea that the principal part of the Atlantic tide progresses northward along the axis of the ocean; for, the swinging of the sea due to the diurnal motions of the sun and moon must be chiefly east-and-west and not north-and-south. Observation, he notes, shows the range of tide at Ascension and St. Helena islands, as well as at many places upon the shores, to be a very small quantity; again, the tide is almost simultaneous all along the coast from the Cape of Good Hope to the Congo. These facts render very difficult the conception of a great and sufficient tide wave progressing northward in accordance with the cotidal lines of Whewell.

Prof. J. Challis has written numerous papers on hydrodynamics, most of which are to be found in the Philosophical Magazine since 1851; a "Report on the present state of the analytical theory of hydrostatics and hydrodynamics" is given in the British Association Report for 1833. His papers on tidal theory are found in the Philosophical Magazine for the years 1870 and 1875.

The principal writings of *Sir John Scott Russell* are contained in the British Association Reports from 1834 to 1850. They relate mainly to hydrodynamical experiments and applications of the same to marine engineering. He became popularly known through the part he played in the construction of the steamship Great Eastern. The results of his experiments on waves are contained in the Reports for 1837 and 1844.

He classifies waves in the following manner, but deals mostly with the "wave of translation:"

System of Water Waves.

Orders.	First.	Second.	Third.	Fourth.
Designation ..	Wave of translation.	Oscillating waves.	Capillary waves.	Corpuscular wave.
Characters....	Solitary.	Gregarious.	Gregarious.	Solitary.
Species.....	Positive.	Stationary.	Free.	
	Negative.	Progressive.	Forced.	
Varieties	Free.	Free.		
	Forced.	Forced.		
Instances....	The wave of resistance.	Stream ripple.	Dentate waves.	Water-sound wave.
	The tide wave.	Wind waves.	Zephyral waves.	
	The aërial sound wave.	Ocean swell.		

One of his most important results is that the velocity of the "wave of translation," which he supposes to include the tide wave, is

$$v = \sqrt{g(h+\eta)} \tag{265}$$

where η is the height of the crest of the wave, reckoned from the surface of the undisturbed fluid, and h is the undisturbed depth; i. e., $h+\eta$ is the height of the free surface above the bottom, and so this formula is readily suggested by that of Lagrange. Airy's work makes, for high-water phase,

$$v = \sqrt{g(h+3\eta)}. \tag{266}$$

In Articles 393 et seq. of his Tides and Waves he compares values resulting from this and other formula with Russell's experiments and concludes this value of v to be justified. In the Report for 1844 Russell does not accept Airy's statement, but says:

> Later discussions of the experiments not only confirm this result [$v=\sqrt{g(h+\eta)}$], but are themselves established by such further experiments as have been recently instituted, so that this formerly obtained velocity may now be regarded as the phænomenon characteristic of the wave of the first order.

Russel's result has reference to a "solitary wave," while Airy's refers to a long wave which is periodic. See Rayleigh, Phil. Mag., Vol. 1 (1876), p. 262.

Thomas Kerigan, in a book entitled The Anomalies of the Present Theory of the Tides,* contends that the tides are due to "the *negative influence* of the moon" because he finds the attraction of the sun, and especially of the moon, to be wholly inadequate for raising them.

Sir George B. Airy (1801–1892).

* London, 1847.

114. Airy's work on tides consists chiefly of an essay entitled Tides and Waves (c. 1842), forming an article in the Encyclopædia Metropolitana, of four papers on particular tides, appearing in the Philosophical Transactions (1842, 1843, 1845, 1878), and one in the Proceedings of the Royal Society (1877). To these may be added a paper entitled "On a controverted point in Laplace's theory of the tides" (Phil. Mag., 1875).

Stokes has given some account of Airy's work in an article entitled "Report on recent researches in hydrodynamics," B. A. A. S. Report, 1846; also found in his Mathematical and Physical Papers.

D. D. Heath, in the Philosophical Magazine, Vol. 33 (1867), has a paper entitled "On the dynamical theory of deep-sea tides, and the effect of tidal friction." In this he gives a restatement of a part of Airy's work.

Airy outlines the plan of his Tides and Waves as follows:

I. We shall describe cursorily the ordinary phænomena of Tides.

II. We shall explain the *Equilibrium-Theory of Tides*, including the first tidal theory given by Newton, and the more detailed theory of his successors, especially Daniel Bernoulli.

III. We shall give a sketch of Laplace's investigations, (founded essentially on the theory of the *motion* of water,) in the general form in which he first attempted the theory, as well as with the arbitrary limitations which he found it necessary to use for practical application.

IV. We shall give an extended Theory of Waves on water, applying principally to the motion of water in canals of small breadth, but with some indications of the process to be followed for the investigation of the motion of Waves in extended surfaces of water.

V. The results of a few Experiments on Waves will be given, in comparison with the preceding theory.

VI. We shall investigate the mathematical expressions for the Disturbing Forces of the Sun and Moon which produce the Tides, and shall use them in combination with the theory of Waves to predict some of the laws of Tides.

VII. We shall advert to the methods which have been used, or which may advantageously be used, for Observation of Tides, and for the Reduction of the Observations.

VIII. We shall give the results of extensive observations of the Tides, as well with regard to the change of the phænomena of tides at different times in the same place, as with respect to the relation which the time and height of tide at one place bear to the time and height at other places, and shall compare these with the results of the preceding theories, as far as possible.

And as Conclusion, we shall point out what we consider to be the present Desiderata in the Theory and Observations of Tides.

115. Passing over the first three sections, wherein he has given the equilibrium theory in a form subsequently used by Haughton and others, also the principal parts of Laplace's theory in a more intelligible form, we proceed at once to Section IV, which deals mostly with waves in canals:

We have already stated that the Equilibrium-Theory of Tides, though curious in its relation to the history of the science, and valuable for the coincidence of the algebraic form of its results (under certain modifications) with those of more accurate theories, and with the laws deduced from observations, does not deserve the smallest attention as representing the state of the ocean at any time. We have also stated that Laplace's theory of the movement of the sea, supposing the globe completely covered by water, whose depth is uniform, or follows a very simple geographical law, though based upon sounder principles, has far too little regard to the actual state of the earth to serve for the explanation of the principal phænomena of tides. We now come to a third theory: that of the motion of the tidal waters, supposing them to run in the manner of ordinary waves in canals. It is evident that this theory will not apply to every part of the sea, and therefore it must, to a certain extent, be considered imperfect. Still it will apply strictly to many cases (to rivers without exception; and to arms of the sea where their breadth is smaller than their length, and where the irregularities of the coasts are not very remarkable), and it will apply without sensible modification to other cases of open seas, where the whole may be conceived divided into parallel canals in which the circumstances are nearly similar. For these reasons we are inclined to think that this mode of considering the subject, in the present imperfection of mathematics, deserves special notice among the various Theories of the Tides.

It is necessary for our present purpose to enter into a pretty general investigation of the Theory of Waves of water; and we shall therefore commence without any obvious reference to the subject of Tides.

We shall, for convenience, divide this Section into the following parts:

Subsection 1.—General explanation of waves; and general theory of waves, supposing the motion of the particles small.

Subsection 2.—Theory of waves in canals of uniform depth and uniform breadth, whether the waves be short or long, the motion of the particles being supposed small.

Subsection 3.—Theory of long waves in which the elevation of the water bears a sensible proportion to the depth of the canal.

Subsection 4.—Theory of waves when the water is acted on by horizontal and vertical forces, the motions of the

particles being small; including also the theory of a single wave, and the theory of waves in canals of variable depth and variable breadth; with the introduction of the ideas of *free-wave* and *forced-wave*.

Subsection 5. Method of introducing the limits of the canal in general; and application of the doctrine of *free-wave* and *forced-wave*.

Subsection 6. Theory of waves, as affected by friction.

Subsection 7. Theory of waves in water of three dimensions, or where the horizontal extent of the surface in two dimensions is taken into account.

116. Having obtained the equation of continuity and the equation of equal pressure, Airy next supposes the motion to be oscillatory and proposes the problem—

To examine whether it is possible that a system of waves, depending upon oscillatory motion of the particles of water, can move along a canal of uniform breadth, but of variable depth: gravity being supposed uniform, and no other force being supposed to act.*

His conclusion is—

It would appear, therefore, that when the depth is variable, it is impossible that there can be a series of waves which consist of oscillatory motion of the particles, and which satisfy the two equations of continuity and of equal pressure.

The following physical interpretation of this mathematical result appears to be correct, and is worthy of attention. It appears that, if the water is moving in the manner of waves, one at least of the two conditions (continuity and equal pressure) must fail. While the continuity holds, the equal pressure will exist, from the nature of the fluid. Therefore the continuity must cease, or the water must become *broken*. This appears to be the explanation of the broken water which is usually seen upon the edge of a shoal or a ledge of rocks, although the whole is covered, perhaps deeply, by the water.

He then takes up the case of a canal of uniform depth, and determines the fundamental relation [equivalent to equation (29) § 18, or (42) § 23] between the length of the wave, depth of water, and its period. These are tabulated in his first two tables;† his third table gives the velocity of a free tide-wave for various depths. His fourth table gives the relative displacements of the fluid particles at various depths, the length of the wave having a given ratio to the depth of the fluid.

117. In Subsection 3, Airy proposes the problem—

To investigate the motion of a very long wave, as the tide-wave, in a canal whose depth is so small that the range of elevation and depression of the surface bears a considerable proportion to the whole depth.

The problem of a long wave propagated in a canal of rectangular cross-section was originally solved (to the first approximation) by Lagrange;‡ that is, the velocity of propagation was found to be $\sqrt{gh}$, h being the depth of the undisturbed fluid. The long wave was subsequently treated by Green,§ who found for a triangular canal with one side vertical, the velocity of propagation to be the same as that in a rectangular canal of half the depth. Kelland‖ found, for a uniform canal of any cross section whatever, the velocity of propagation to be $\sqrt{\frac{gA}{b}}$, A denoting the area of the cross section and b the breadth of the fluid at the surface. This formula was found to agree with results obtained from Russell's experiments. Airy derives and uses the exact equation of equal pressure (for a uniform canal of rectangular cross-section), viz.

$$\frac{\partial^2 \mathrm{X}}{\partial t^2} = gh \frac{\partial^2 \mathrm{X}/\partial x^2}{\left(1 + \frac{\partial \mathrm{X}}{\partial x}\right)^3} \tag{267}$$

He obtains an approximate solution upon the assumption that $\frac{\partial \mathrm{X}}{\partial x}$ is small but not negligible. This gives for X, K, or $\frac{\partial \mathrm{K}}{\partial x}$,¶ besides a single sine or cosine term, other similar terms having

* Tides and Waves, Art. 154.

† Tables 47 and 48 are taken from Airy's first and second tables, respectively.

‡ Berlin Memoirs, 1781, 1786, Œuvres, Vol. I, p. 747.

§ Trans. Camb. Phil. Soc., Vol. VI (1837); Vol. VII (1839).

‖ Trans. Roy. Soc. of Edinburgh, Vol. XIV (1840). In this paper Kelland makes brief mention of the workers on wave motion since the time of Newton.

¶ X, K correspond to ξ, η of § 18. We have written h instead of k for the undisturbed depth, also the conventional ∂ for partial differentiation.

double the argument of the original term. Moreover, a coefficient belonging to one of these additional, or harmonic, terms does in each case involve the factor x. He therefore concludes that the height of the secondary wave continually increases as it travels along the canal. Again, he says:

When the wave leaves the open sea, its front slope and its rear slope are equal in length, and similar in form. But as it advances in the canal, its front slope becomes short and steep, and its rear slope becomes long and gentle. In advancing still further, this remarkable change takes place in the rear slope: it is not so steep in the middle as in the upper and the lower parts; at length it becomes horizontal at the middle; and, finally, slopes the opposite way, forming in fact two waves.*

As McCowan† has pointed out, this tendency to subdivide does not follow from an exact solution of the above equation, but from applying Airy's approximation to stations situated so far from the sea that it ceases to be applicable.

Airy finds that in a shallow canal the duration of fall should exceed the duration of rise:

Excess of the time of water falling above the time of water rising $= 6b \times$ time occupied by the tide-wave in passing from the open sea to the station under consideration.

$$\text{Where } b = \frac{\text{rise of tide above the mean state}}{\text{mean depth of water}}. \tag{268}$$

Thus in any part of the canal far from the sea, the times of high water and of low water, and the interval between them, will on different days depend on the extent through which the surface of the water oscillates up and down, or upon the magnitude of the whole rise of tide. And in places on the canal at different distances from the sea, the inequality of the times of water rising and water falling will, on the same day, depend upon the distance of the places from the sea.‡ . . . . . .

Therefore the phase of high water has travelled along the canal with the velocity . . . $\sqrt{gh(1+3b)}$ nearly. The velocity with which a shallow wave of great length would travel along the surface of water, whose depth = depth here at high water, would, by (172.),§ be $\sqrt{g \times \text{depth at high water}} = \sqrt{g \times h\,(1+b)}$. Consequently, the phase of high water travels along the canal with a velocity greater than that of a shallow wave on water of the same depth as the high water. In like manner, the phase of low water travels along the canal with the velocity $\sqrt{[gh(1-3b)]}$ nearly, which is less than that of a long shallow wave on water of the same depth as the low water. The following theorem will be easily remembered. If D_2 be the depth at low water, D_3 that at high water, and if D_1, D_2, D_3, D_4, are in arithmetical progression; then the phase of low water travels with the velocity due to the depth D_1, and the phase of high water with the velocity due to the depth D_4.‖

After showing that the ebb-stream should be swifter than the flood-stream, and also giving a solution to the third approximation, he takes up the problem—

To investigate the motion of the tide-wave under the same circumstances, when the water of the canal is supposed also to have a current-flow (independent of fluctuations of tide) towards the sea.

He finds that the duration of fall exceeds the duration of rise by a quantity greater than in the case of no current.

The subsection concludes with an investigation for long waves in a canal whose section is invariable, but of any form, and here the velocity of propagation is found to agree with the rules of Kelland and Green.

118. Subsection 4 supposes the water acted upon by an extraneous force and has applications to a solitary wave, tides, and wind waves.

Thus it appears, that a single discontinuous wave of any degree of complexity may travel on water without any force to maintain it, provided, in the first place, that it satisfies the conditions laid down with regard to the differential coefficients at its terminations, and in the next place, that the wave is so long that a succession of simple waves, each of that length, would travel sensibly with the velocity due to waves of infinite length.¶

If the single wave is moderately long, a small force will maintain it as a discontinuous wave: but if it be short, the force must be (in proportion to the various pressures acting on the water) considerable. In fact, each of the different terms in the wave-function represents a wave of different length; and, when the waves are short, each of these would tend to travel on with its own peculiar velocity, which velocities are very different for the different waves. But when the waves are long, the peculiar velocities are very nearly the same for the different waves.

---

* Tides and Waves, Art. 203. The tides at Wilmington, N. C., show signs of this.

† Phil. Mag., Vol. 33 (1892), pp. 251, 265.

‡ Tides and Waves, Art. 207.

§ Numbers thus inclosed, in quotations from Airy, refer to articles or paragraphs in his Tides and Waves.

‖ Ibid, Art. 208. See under Russell.

¶ Tides and Waves, Art. 234.

When a long wave is propagated along a canal of non-uniform depth, Airy's investigations show that the amplitude of the horizontal displacement varies inversely as the fourth root of the cube of the depth, while the amplitude of the vertical displacement (i. e., the rise and fall of the tide) varies inversely as the fourth root of the depth.*

For a canal of non-uniform breadth, the amplitudes of the horizontal displacement will be inversely as the square root of the breadth of the canal; and the same law holds for the amplitude of the vertical displacement.†

In the case of long waves in shallow water, where the depth diminishes, the water is sensibly elevated above its mean height when the flow ceases; and in like manner it is sensibly depressed below its mean height when the ebb ceases.‡

I. e., slack-before-ebb or flood occurs earlier because of this shoaling.

Where the breadth diminishes, the water is sensibly elevated above its mean height when the flow ceases; and in like manner, the water is sensibly depressed below its mean height when the ebb ceases.

I. e., slack-before-ebb or flood occurs earlier because of this contracting.

H and G being the amplitudes, or coefficients, of the horizontal and vertical periodic forces acting upon the waters, he finds the following result agreeing with the equilibrium theory as well as with Laplace's theory:

If we consider G and H to be quantities not very dissimilar in magnitude, (which we shall find to be true,) the term depending on G in each of these expressions is wholly insignificant in comparison with that depending on H; and thus we arrive at this remarkable conclusion, that *the effect of the vertical disturbing force upon the phænomena of the tides is insignificant*, the whole of the sensible effect being due to the horizontal force.§

Near the end of this subsection he says:

The preceding conclusions are very important, as showing that the amount of elevation of the water under the action of forces depends in a most remarkable degree upon other circumstances than the magnitude of the forces. One is, the depth of the sea: another is, the periodic time of the forces. As depending upon the former, it appears that, if there were two parallel canals of different depths acted on by precisely the same forces, there might be high water in one when there was low water in the adjacent part of the other: or there might be elevations and depressions at the same time in both, but their magnitudes might have any proportion whatever. As depending upon the latter, it appears that, if there were two forces acting simultaneously upon the water in the same canal, the periods of those forces being different, (as, for instance, the forces depending upon the action of the Sun and the Moon,) the high water produced by one force might bear the same relation to the phases of that force which the low water produced by the other bears to the phases of that other force: (thus low water of the solar tide might accompany the transit of the Sun, and high water of the lunar tide might accompany the transit of the Moon, in the same canal.) Or the phases of the two tides might stand in the same relation to the phases of the two forces, but the proportion of their magnitudes to the magnitudes of the forces might differ in any degree whatever.

119. In subsection 5, Airy investigates the tides produced by the moon in a canal, friction being still left out of consideration. He finds, for a canal bounded at both ends,—

If the length of the canal is any multiple of half the length of the free tide-wave, this expression‖ becomes infinite. In reality the wave will become so large that the amount of friction, &c., will be so great as to neutralize the moon's force.¶

But when such a canal is short he concludes from the expressions for the horizontal and vertical displacements—

The first of these expressions shows that the horizontal motion will be greatest in the middle of the canal's length, and will diminish gradually both ways to the ends, where it is 0. The second shows that there is no variation of level at the middle of the canal's length, but that the variation of level in other parts is proportional to the distance from the middle, elevation taking place on one side of the middle at the same time as depression on the other side, so that the surface of the fluid remains sensibly plane, though inclined to the horizon. The law of motion as regards the time is the usual oscillatory law expressed by cos *it;* but the motion of every particle differs in this respect from the motion of particles in an open sea affected by the tide: that here, the greatest horizontal displacement happens at the same time as the greatest vertical displacement; whereas, in an open sea, the greatest horizontal displacement happens when the vertical displacement is 0, and *vice versa*.

For a canal of *any* assumed length, and bounded at both ends, the expressions for the displacements are generally complicated.

---

* Tides and Waves, Art. 247.

† Cf. Lamb, Hydrodynamics, § 181; or § 33; Part I, this manual.

‡ Tides and Waves, Art. 256.

§ Tides and Waves, Art. 279.

‖ Vertical displacement.

¶ Tides and Waves, Art. 299.

Airy next supposes the case of a canal closed at one end whose waters are acted on by the forces of the moon and which communicates with a tidal sea.

The result of this supposition is complicated; but if the moon's force in the canal is insensible, it follows that all the oscillations in different parts of the canal take place at the same time.*

When the elevation of the water bears a sensible proportion to the whole depth he finds for a canal opening at one end into a tidal sea—

> The law of the rise and fall of the water, at every part of the canal except its mouth, is now different from that which holds on the supposition that the oscillation is small in proportion to the depth of the canal. But the times of high water and of low water are still the same as before, and the high water and the low water are still simultaneous through the whole length of the canal.†

Brief mention is then made of a canal connecting two seas, both tided, or one may be tideless.

120. In subsection 6 friction is taken into account; it is assumed to be proportional to the velocity of the fluid particles, or $-f\frac{\partial X}{\partial t}$, since the motion is chiefly horizontal.

In an indefinite canal, friction shortens the horizontal displacement; it causes the horizontal disturbing force to become zero at a point farther east, and so accelerates the times of the tides. Tides of longer period are more accelerated.

Considering the coefficients of the tidal force as variable, it appears that the greatest tide follows the greatest force by the time $f \times (\text{constant})^2$. He says:

> This appears to us an important result, and one which no other theory has obtained. The equilibrium-theory of tides necessarily makes the tides to be greatest upon the same day on which the force is greatest. Laplace's theory, and the theory of waves in canals without friction, give the same result. But here we find a retardation accounted for by friction; and moreover this retardation is considerable.‡

For a tide propagated up a river of indefinite length, he finds that, because of friction, the vertical and horizontal motions of the particles diminish continually as the wave travels up the river; also that the flow ceases before the water has dropped to its mean height, and so turns earlier than in the case of no friction.

In a tidal river stopped by a barrier, he finds that the slack before ebb is not simultaneous with the time of high water, but somewhat later. This interval may be considerable near the mouth, but it is small near the head.§

Also that when a canal bounded at both ends is acted upon by an external force, the rise and fall of the tide is greater at the ends than at the middle.

In regard to a river of indefinite length running on a declivity toward a tidal sea, he concludes that—

> The circumstance that low water on a tidal river may be higher than high water on the sea, paradoxical as it may appear, is therefore a simple consequence of theory.

121. Subsection 7 contemplates the motion of water in three dimensions. The equation of continuity is symmetrical in X, x and Z, z; there are two equations of equal pressure, the one in X, x; the other is similar in Z, z.

He finds solutions for annular and parallel waves, noting the effect of reflection from a straight boundary.

> Leaving for the present the consideration of the motion of the waves as determined by the differential equations, we shall consider one case in which we seem to derive some assistance from general reasoning.
>
> Suppose that a tide-wave is travelling along a canal of large dimensions, and of variable depth in its cross section, the depth diminishing gradually to both shores. (We may suppose the dimensions to be such as those of the English Channel, or any similar arm of the sea.) It is evident that the investigation of (218.)‖ does not apply here: for, on account of the shallowness of the water at the sides, the velocity of flow towards both sides to produce the elevation of water there must be comparable with, perhaps equal to, the velocity of flow at mid-channel in the

---

* Cf. § 30, Part I, this manual.

† Tides and Waves, Art. 309.

‡ Tides and Waves, Art. 329.

§ In the Philosophical Magazine, Vol. 12 (1856), pp. 184–188, C. Marret gives a popular explanation of how high-water occurs before the turn of the current, and of how the current near the shore turns before it turns in the offing. See Art. 507 of Tides and Waves.

‖ Numbers thus inclosed, in quotations from Airy, refer to articles or paragraphs in his Tides and Waves.

direction of the canal's length. Moreover, as the slope of the bottom is exceedingly small, the waves in every part of the channel will be travelling in nearly the same manner as if the extent of sea of the same depth were infinitely great, and will therefore travel with the velocity due to that depth: and, therefore, the ridge of wave cannot possibly stretch transversely to the channel, and travel along with uniform velocity lengthways of the channel. The state of things, then, will be this: the central part of the wave will advance rapidly (171.) along the middle of the channel; the lateral parts will not advance so rapidly; and the whole ridge will assume a curved shape, its convex side preceding. When this form is once acquired, it may perhaps proceed with little alteration; for if . . . we suppose two such curves exactly similar, but one a little in advance of the other, the space which separates the wings of the two curves, measured perpendicularly to the curves, (the direction in which that part of the wave must really travel,) is much less than the space which separates the centres of the curves, and by proper inclination may be less in any proportion; and, therefore, may represent exactly the space travelled over by the wave at that depth while the wave at the greater depth travels over the greater space. That part of the ridge of the wave which is nearest to the coast will, therefore, assume a position nearly parallel to the line of coast.

Now the wave whose ridge is nearly parallel to the coast, or which advances almost directly towards the coast, will be a wave of the same character as that treated of in (307.). For the slope of the beach adds to the surface of the sea a very insignificant quantity, as compared with the breadth of the tide-wave, and the general effect is the same as if a perpendicular cliff terminated the sea on that side. Therefore, for those parts of the sea which are near to the coasts the law of (307.) holds; namely, the greatest horizontal displacement of the particles occurs at the same time as the greatest vertical displacement; and, therefore, when the sea is rising, the water is, for some distance from the coast, flowing towards the coast, and when it is falling, the water is flowing from the coast.

In mid-channel, the motion of the water will be such as is described in (184.), &c.; that is, the water will be flowing most rapidly up the channel at the time of high water, and its motion upwards will cease when the water has dropped to its mean height.

From this there follows a curious consequence with regard to the currents at an intermediate distance from the shore, where the effects of these two motions may be conceived to be combined.

At high water the water is not flowing to or from the shore, but is flowing up the channel.

When the water has dropped to its mean elevation, the water is ebbing from the shore, but is stationary with regard to motion up or down the channel.

At low water, the water is not flowing to or from the shore, but is running down the channel.

When the water has risen to its mean height, the water is flowing to the shore, but is stationary with regard to motion up or down the channel.

Consequently, in the course of one complete tide, the direction of the current will have changed through 360°, the water never having been stationary. And the direction of the change of current will be of such a kind that, if we suppose ourselves sailing up the mid-channel, the tide-current will turn, in those parts which are on the *left* hand, in the *same* direction as the hands of a watch; and in those parts which are on the *right* hand, in the direction *opposite* to that of the hands of a watch.*

Beyond this we can add little to the Theory of Waves upon a sea extended in both dimensions. But the following remarks will be found important with reference to the method of determining from observations some of the phenomena of tides:

In tracing the progress of the tide across an extended sea, we cannot observe the different waves as we can those upon a small piece of water. We can do nothing but make observations of the time of the rise and fall of the sea at many different points along the shores of the bounding continents, or at islands in different parts of the sea: and when we have thus ascertained the absolute time of high water at many different points, if they are sufficiently numerous, we may draw lines over the surface of the sea passing through all the points at which high water takes place at the same absolute instant. These lines (adopting the word introduced into general use by the highest authority on the discussion of tide-observations) we shall call *cotidal lines*. The tracing out the cotidal lines in different seas is the greatest advance that has yet been made in the discussion of the phenomena of the tides in open seas.

Now when the series of waves is single, the cotidal lines correspond exactly with the lines marking the position of the ridge of the wave at different times. But when the series of waves is compound, it may happen that the form of the cotidal lines will not present to the eye the smallest analogy with the forms of the ridges of the mingled waves.†

The fifth section of the essay is devoted to an account of experiments on waves and to comparisons with theory. He finds a general agreement between the theoretical and observed velocity of propagation, but attributes the want of close agreement to the fact that Mr. Russell neglected to observe the length of the waves in his experiments.

122. In the sixth section he applies Laplace's equations of motion to tides in narrow canals. In these cases it is unnecessary to consider the forces arising from the earth's rotation. The problem thus simplified admits of solutions which take into account the motion in right ascension of the tidal body. The cases especially considered are a canal along a parallel of latitude, and a great circle in any position. For an equatorial canal, the tide is equal throughout its whole extent, and

* Cf. § 13, Part I, this manual.

† Tides and Waves, Arts. 358-366.

the depth will decide whether high water or low water occurs under the moon.* For a canal passing through the poles the tide wave is a stationary wave.

In considering the effect of sun and moon he concludes:

1st. If the depth of the sea is less than 14 miles, the mass of the moon inferred from the tides is inevitably too great.

2d. The error will be different (or the moon's mass will appear different) in canals of different depths.†

Having introduced the effect of friction, he says:

Thus it appears that for computing the time of high water it is necessary to use, not the positions of the sun and moon at the true time of the tide, nor the positions at that anterior time which is employed in computing the height of high water, but a time later than that which is used for computing the height, and therefore a time which is nearer to the true time of high water. . . . . .

If we investigated the effect of the passage up the shallow river upon the time of low water, we should find that the positions of the sun and moon corresponding to an earlier time than that used for the height of the high water must be employed; but we should still find that the mass of the moon inferred from the variations of the time of low water as referred to the moon's transit is too small.

We shall here close our exposition of the Wave-Theory as applied to the tides. As nearly the whole of this theory is published for the first time in the present treatise, we shall not remark upon it at great length. We think it right, however, to point out to the reader its great and important defect as applied to the explanation of tides upon the earth, namely, that in the case of nature the water is not distributed over the surface of the globe in canals of uniform breadth and depth, or in any form very nearly resembling them. In this regard its fundamental suppositions are probably as much, or nearly as much, in error as those of Laplace's theory. But we also think it right to point out that in regard to the completeness of detail with which the principles can be followed out, there is no comparison between the two theories. This will be seen by the reader who has remarked the facility with which the results of "difference between the angular velocities of the sun and moon," "variable coefficients of force," and "friction," are obtained in finite form. For these, Laplace's theory is quite useless. And though (as we have stated) the fundamental suppositions differ much from the real state of the seas, yet no one can hesitate to admit that the same general conclusions will apply:—for instance, that the moon's mass inferred from the height of the tides is too great, and by different degrees in different places: that the effect of friction will be a retroposition of tides in reference to the places of the sun and moon, &c. The peculiarities of river-tides, which no other theory has touched upon, are almost completely mastered by this.

123. In the seventh section is described Bunt's self-registering tide gauge; the methods of discussion adopted by Laplace, Lubbock, and Whewell; but of special interest is his description of a process of harmonic analysis which he had already applied to the tide curves at Deptford,‡ and which he is about to apply to the tide curves at Southampton and Ipswich.§

In brief, he expresses the depression of the surface of the sea below a fixed mark for any given phase of the tide in the form

$$\begin{aligned} &A_0 + A_1 \text{ cos. phase} + A_2 \text{ cos. 2 phase} + \&c., \\ &\quad + B_1 \text{ sin. phase} + B_2 \text{ sin. 2 phase} + \&c., \end{aligned} \tag{269}$$

which, it is well known, is sufficient for the representation of a function which is periodical for 360° of phase.

Then follow directions for determining the A's and B's.

124. In Section VIII Airy brings the tidal theories (equilibrium, Laplace's, and wave theories) to bear upon many questions connected with tides the nature of which are indicated by the following topics:

Variation in range and shape of the tide as it progresses; the bore; tides in small seas; revolution of tidal currents; races; mean level of the sea little affected by the range of tide; the ratio of the solar to the lunar wave (coefficient of semimenstrual inequality) varies from place to place, and also depends upon whether it is obtained from heights or from times; similarly for the age of this inequality; the necessity of using different transits for different inequalities; the diurnal tide; and cotidal lines.

The essay concludes with a statement of the present desiderata in the theory and observation of tides.

125. In the Philosophical Transactions for 1845 Airy makes a study of the tide at about twenty stations scattered around the coast of Ireland.

He ascertains the times when the high and low water inequalites become zero and when a

---

* Cf. § 41, Part I, this manual.

† Tides and Waves, Art. 455.

‡ Phil. Trans., 1842, pp. 1–8.

§ Ibid., 1843, pp. 45–54.

maximum. He is the first writer to make special use of the diurnal wave at the time of its maximum amplitude. Its amplitude, and position with respect to the semidiurnal wave are found from the height inequalities.* He shows that the diurnal and semidiurnal waves do not travel alike either in direction or in velocity.

> The high water at Kingstown coincides *precisely* with the low water at Dunmore East, and *vice versâ*. Moreover, between these two stations occurs the station Courtown; and here . . . the semidiurnal tide is nearly insensible. The difference in the times at Dunmore East and Kingstown does not therefore arise from a slow transmission of tide; but arises from a sudden *inversion* of the wave, the point which separates elevation from depression being not far from Courtown. And the question now is, whether, on the supposition that the tide-wave enters the Irish Sea by this southern entrance, it is possible to explain the existence of this neutral point and the inversion of the tide beyond it.

This he believes may be explained by a result established in "Tides and Waves," where a uniform canal closed at one end communicates with a tidal sea; and which is, that the oscillation is simultaneous throughout the canal. In case of the Irish Sea representing such a canal, the open end is to the south and the closed end to the north; and if the depth be such that the coefficient (amplitude) of the simultaneous oscillation have opposite signs at Kingstown and Dunmore East, the phenomenon is, in a general way, explained. (See § 30, this manual.)

He has some further discussion upon the coefficient and age of the semimenstrual inequality as determined from time and height.

He determines the coefficients of each individual tide at the various stations, the period covered being two months.†

Having discussed the tides at Courtown, he says:

> Both the semidiurnal tides are very much diminished, the lunar so much that its range is rather less than that of the solar tide. The quarto-diurnal tide exists in nearly its greatest magnitude. The geometrical representation is perfect; the mechanical explanation is not complete. In both respects, as regards what is reduced to law and what is yet incomplete, the Courtown tides must be regarded as the most remarkable that have ever been examined.

He is inclined to believe that the tertio-diurnal tide is not sensible on the coast of Ireland.

At the close of his discussion of the tides at Malta (Phil. Trans., 1878), Airy gives some account of the seiches as observed at that place.

126. Among the Mathematical and Physical Papers (1880) of *Prof. G. G. Stokes* several relate to the subject of wave motion. He treats the "long wave" in the paper entitled "Recent researches in hydrodynamics" (B. A. A. S. Report, 1846), and in the one entitled "Notes on hydrodynamics. IV—On Waves" (Camb. and Dub. Math. Jour., 1849). Airy's work upon tides in canals and certain of Russell's experiments are considered in this connection. Besides these may be mentioned a third paper entitled "On the theory of oscillating waves" (Trans. Camb. Phil. Soc., 1847).

Capt. F. W. Beechey, Phil. Trans., 1848, discusses the tidal currents in the Irish Sea and English Channel. He draws upon a series of maps lines indicating the direction of the current (lines of flow) at stated hours and lines of equal range, the moon being new or full. Upon a chart of the Irish Sea showing "the set and rate of the flood stream" he has indicated a region of no current, which is caused by the meeting of the waters from north and south. Upon the chart of ranges of tide, the range nearly vanishes at Courtown while on the opposite coast of Wales it is 15 or 16 feet. In the Philosophical Transactions for 1851 he gives charts of the English Channel showing the lines of flow for each hour before and after high water at Dover. These charts have been copied in several publications. Quite recently (1891) M. Hédouin of the *Service hydrographique de la marine* has designed similar charts for this region, the currents being referred to the tides at Cherbourg.

---

* $2D_1 = \sqrt{HWQ^2 + LWQ^2}$

$$\tan(\text{HW phase}) = \frac{LWQ}{HWQ}$$

Of course the amplitudes obtained have not been corrected for the time of year or the longitude of the moon's node, i. e., each value is really $D_1 \div F_1$, Table 32.

† In the mean, these coefficients nearly coincide with M_2, M_4, M_6, and M_8, excepting at Courtown, where the lunar tide does not predominate. The angular constants correspond to 0, $2M_2^\circ - M_4^\circ$, $3M_2^\circ - M_6^\circ$, $4M_2^\circ - M_8^\circ$.

127. *Prof. Alexander D. Bache* (1806–1867).

As Superintendent of the Coast Survey, Bache caused many tidal observations to be made all along the coasts of the United States. He also gave his personal attention to the discussion of the observations; and among those who assisted in this work were L. F. Pourtales, L. W. Meech, Henry Mitchell, Charles A. Schott, and R. S. Avery.

His writings on tides are contained in the Coast Survey Reports (1851–1866) and in the Proceedings of the American Association (1850–1857). As shown by these writings, the chief purpose of his work was the construction of cotidal lines and the obtaining of suitable elements for prediction of tides. This implied, besides many and extended observations, suitable modes of classification according to proper astronomical arguments. The principal numerical results are given in the Reports (1853–1864) under the title "Tide tables for the use of navigators," the most complete of these tables being found in the Report for 1864, pp. 58–90. The constants given for nearly all except Gulf stations are: Mean high-water interval, extreme phase inequality in time, mean range of tide, spring range, neap range, duration of rise, of fall, and of stand. For the Gulf stations the constants are: The average range, the range at greatest declination and at zero declination. For numerous stations the phase inequality is tabulated according to the single argument—the time of the moon's transit. For several Pacific stations tables of double argument are provided—the time of the moon's transit and the number of days from her extreme declination. Tables of single argument—the number of days from greatest declination—are also given. The double-argument table must give predictions superior to those given by means of two tables of single argument successively applied. And so it seems that the predictions for the Pacific Coast issued by the Survey for the years 1867–1870, should, on this account, be more accurate than the predictions for the years 1871–1884 where single-argument tables were used, in accordance with Avery's paper published in the Report for 1868 and entitled "Mode of forming a brief tide table for a chart." In fact, if a series of such double-argument tables were prepared for the different years or portions of the node-equinox period, the resulting predictions must accord well with the tides in nature, especially if the heights are corrected for parallax. Bache contemplated corrections for "the solar and lunar parallax and declination," but they were never extensively introduced into the computed predictions of the Coast Survey tide tables.

The work of *Meech* was largely directed along this line which had already been opened up by Bernoulli, Laplace, Lubbock, Whewell, and Airy. Some account of his work is given in the Proceedings of the American Association, 1856, I, pp. 166–170, and in the Coast Survey Report, 1856, pp. 249–251. An obvious fault of his treatment, where the diurnal inequality is large, is the neglecting of the motion of the moon's node.

Bache paid considerable attention to the diurnal inequality along the Pacific coast.* His manner of treatment was essentially that of Lubbock and Whewell, and he shows in the report for 1854 that even where the diurnal inequality is large, the height inequalities are nearly proportional to the sine of twice the moon's declination.

For the Gulf tides, Bache constructed two sets of cotidal lines, one for the semidiurnal tide, and one for the *diurnal at the times of extreme declination.* In the report for 1856, p. 254 and sketch 35, he shows the semiannual variation of the lunitidal interval of the diurnal wave at extreme declination. This variation he finds to accord in a general way with that given by a formula of Airy's† for the displacement of the lunar diurnal tide by the solar. In fact the variation is zero at the equinoxes and solstices, the interval being longest in February and August. But he infers that extreme variation differs greatly for different places. This conclusion is doubtless based upon too few determinations. In fact the variation in interval is nearly alike in amount the world over, or at least wherever the age of the diurnal inequality is small. It is simply the perturbation in the K_1 O_1 wave, at the time when K_1 and O_1 conspire, due to P_1, or it is very nearly the perturbation in K_1 due to P_1 (Table 31) multiplied by $K_1/(K_1 + O_1)$. This gives the extreme variation for mean years as about $\pm$ 46^m.

In the same report Bache notices the important fact that for several days at the time of

*See also discussions of Gulf tides, U. S. Coast Survey Reports, 1851, pp. 127–136 or 1866, pp. 113–119; 1852, pp. 111–122.

†Tides and Waves, Art. 46.

maximum diurnal tides, the lunitidal interval of the diurnal wave varies slowly, but that it varies rapidly from day to day as the moon approaches the equator. This is shown by a diagram on "Sketch 35." In a general way, this accords with a remark made in § 13, Part III, or with results obtainable from Table 27.

In the Survey Report for 1857, also in the Proceedings of the American Association for the same year, Bache shows, by aid of diagrams, the effects which the three great bays of the Atlantic coasts of the United States have upon the range of tide; also how the range of tide increases in passing up the Bay of Fundy.

In the reports for 1856 and 1858 he discusses the tidal currents near Sandy Hook and their effect upon the growth of the hook. His explanation of the fact that the velocity of the ebb stream generally exceeds that of the flood is as follows:*

> Since the tide wave is propagated most rapidly in deep water, it follows that the fall of the tide takes place earlier in the channel than upon the shore; hence the water tends to flow laterally *from* the shore *towards* the channel. In this way a convergence of the ebb streams may be expected, especially in shallow bays. With the flood streams the reverse must be true, and the tide wave rising earlier in the channel a flow of water takes place toward the shore. In consequence of these distinctive characteristics the ebb and flood assume an unequal share in the molding of sandy coasts. The ebb current, with its concentration of forces, is a far more powerful agent than the flood; its scouring capacity along its normal course must be more considerable, and it creates more extensive draft currents . . . . But the ebb is the primary working agent, and the characteristic features of all channels and basins, on alluvial tidal coasts, must, as a rule, reflect the effects of the ebb current.

128. An account of *Pourtales'* method for finding the diurnal wave is given by Charles A. Schott in a discussion of Kane's tidal observations in the Arctic Seas, Smithsonian Contributions to Knowledge, Vol. XIII (1863), p. 78:

> The process of decomposition in use in the U. S. Coast Survey was at first an analytical one, by computing sine curves; since 1855, however, a graphical process, equivalent thereto, was substituted; this latter method, as introduced by Assistant L. F. Pourtales, may be briefly explained as follows: After the observations are plotted and a tracing is taken, the traced curves are shifted in epoch 12 (lunar) hours forward, when a mean curve is pricked off between the observed and traced curves; this process is repeated after the tracing paper has been shifted 12 hours backward; the average or mean pricked curve thus obtained represents the semi-diurnal wave. On an axis parallel with that on which the time is counted, the differences between the originally observed and the constructed semi-diurnal wave were laid off; this constitutes the diurnal curve. In the case in hand I have simplified the process of separation by blackening the under surface of the tracing paper with a lead pencil, and running in with a free hand; the intermediate curves by the pressure of a style, an average of the two traces thus left on the lower paper, gave the semi-diurnal wave in quite an expeditious manner. On the diagram, the diurnal curve with its epoch of high water nearly coinciding with that of the semi-diurnal wave, appears plainly with its variation in size depending on the moon's declination.

Besides the Arctic tides just referred to and those observed by Dr. Hayes, *Schott* has discussed, in the Coast Survey Report for 1854, the tidal currents around Nantucket and Marthas Vineyard, also the tides and currents of Long Island Sound.

Largely through the exertions of *Avery*, the Survey commenced the annual publication of tables of predicted tides. These tables, already alluded to, began with the year 1867 and continue up to the present time. In a paper entitled "Methods of registering tidal observations," found in the Survey Report for 1876, Avery gives a considerable amount of practical information in regard to observing tides; also a description of a self-registering gauge of his own design.

The principal writings of *Mitchell* are found in the Coast Survey Reports from the year 1854 to the year 1887. They deal mostly with the effects of tidal currents upon harbors and shore lines. Incidental to such work, he devised a tide gauge for exposed stations,† and an apparatus for observing currents below the surface.‡ The localities treated at some length are: Marthas Vineyard and Nantucket, New York Harbor, Monomoy Peninsula, Portland Harbor, Greytown and Uraba, the Lower Mississippi River, the Delaware River, and the Gulf of Maine.

His principal papers of a general character are: "On the reclamation of tide lands and its relation to navigation" (Report, 1869); "Location of harbor lines" (Report, 1871); "Notes concerning alleged changes in the relative elevation of land and sea" (Report, 1877). They contain

---

* Cf. Mitchell, United States Coast Survey Report, 1869.

† United States Coast Survey Report, 1854, pp. 190, 191; 1857, pp. 403, 404.

‡ Ibid., 1859, pp. 315-317.

numerous rules and practical suggestions, which belong to the art of hydrographic engineering rather than to the study of the tides. To these we may add his pamphlet, issued by the Navy Department in 1868, entitled "Tides and tidal phenomena."

Hydrographic work of a similar character has been since carried on by *Henry L. Marindin.* His papers upon the same are to be found in the Survey Reports since 1880; in particular those for 1888 and 1892.

129. *Rev. Samuel Haughton's* principal writings upon tides are to be found in the Philosophical Magazine (1856, 1863), the Philosophical Transactions (1863, 1866, 1875, 1877, 1878), and the Transactions of the Royal Irish Academy (1854, 1893, 1895). Besides these may be mentioned brief notices in the Proceedings of the Royal Society of London (1860–1877) and a small book entitled Manual of Tides and Tidal Currents (1870).

The tides discussed by him are those around the coasts of Ireland and in the Arctic Seas. He has, in a general way, followed the methods of Airy, and among the quantities worked for are the mass of the moon, the eccentricity of the lunar orbit, the mean depth of the Atlantic Ocean regarded as a canal running north and south.

William Parkes, in the Philosophical Transactions for 1860, treats the high and low waters at Bombay and Karachi, where the diurnal inequality is large. He combines the two waves of variable amplitudes—the diurnal and semidiurnal—and obtains results agreeing fairly well with observation. In the British Association Report for 1870 (I, p. 150), Thomson makes some mention of Parkes' work, comparing with observations predictions made by the latter's method, those made by Thomson's method, and those according to the Admiralty method.

James Croll has written upon the influence of the tidal wave on the earth's rotation, and upon the causes and climatic effects of ocean currents. These writings are found in the Philosophical Magazine, American Journal of Science (1864–1876), and British Association Report (1876).

T. K. Abbott has contributed brief papers on tidal theory to the Philosophical Magazine (1870–1872), the Quarterly Journal (1872), and Hermathena (1882). His small book, based upon the foregoing papers, entitled Elementary Theory of Tides (1888), gives a popular treatment of a few fundamental questions in the kinetic, or rather the canal theory.

E. Lacy Garbett, somewhat after the manner of Abbott, gives a popular exposition of several difficulties in the kinetic theory of tides. He says (Phil. Mag., 1870):

> It appears that, without supposing the remark to be in anywise new, I happened in 1853 to make the first English mention that tidal friction must increase the length of the day . . . and to suggest (what Delaunay is now considered to have verified) that this cause might have counteracted and masked the shortening due to contraction, so as to account for the non-diminution (or, as now admitted, lengthening) of the day since Hipparchus's time. [See under Ferrel, "Questions of priority."]

In the Philosophical Magazine for 1874 *Alfred Taylor* has a paper entitled "On tides and waves,—deflection theory." He advocates the view "that the level of the ocean is nearly represented by high-water mark on coasts and bays where there is free access of the tide and a channel without a sudden taper," instead of being about half-tide level as it would be natural to suppose. He does not believe that tidal action has the smallest effect on the rotation of the earth. His "Deflection theory" takes its name from a supposed deflection (refraction?) which the attractive rays experience in passing through the earth. He deduces from experiments by J. S. Russell and by Darcy a new formula for wave propagation in any depth, p, viz.: $v=3\sqrt{p}$ feet per second.

E. J. Chapman, in the Philosophical Magazine for 1874, proposes the theory that the tides result from the compression of the earth's nucleus, which is surrounded with a layer of incompressible water.

130. *J. Heinrich Schmick* is the author of a book entitled Das Flutphänomen und sein Zusammenhang mit den säkularen Schwankungen des Seespiegels (1874). Besides treating the matter indicated by the title one part is devoted to earthquake, sea, or ocean waves.

Hugo Lentz is the author of a book entitled Fluth und Ebbe und die Wirkungen des Windes auf den Meersspiegel (1879), gives among other things an intelligent account of tidal inequalities, and shows that the notion of the "age" of the tide is quite untenable. As indicated by the title, a portion of the work is devoted to wind effects on the height of the sea, the stations considered being along the North and Baltic seas.

Comoy, in his book entitled Étude pratique sur les Marées Fluviales et notamment sur le Mascaret (1881), gives an account of wave motion, particularly waves of translation, as propagated up tidal rivers; a study of the mascaret in the rivers of France; and the effects of river improvements.

J. C. Houzeau and *A. Lancaster* in their Bibliographie générale de l'Astronomie,* Vol. II, pp. 626–635, give a complete list of papers upon the theory of tides, including the effect of lunar attraction upon gravity, the effect of the tides upon the earth's rotation, also atmospheric or aerial tides. The list begins with the writings of Wallis and continues through the year 1880.

131. *A. B. Basset* is the author of a treatise on hydrodynamics (1888), the seventeenth chapter of which is upon liquid waves. Chapter XIX is devoted to the theory of tides. He treats in brief the equilibrium theory, gives Darwin's development of Laplace's theory, and also portions of Airy's canal theory.

Prof. Horace Lamb in A Treatise of the Mathematical Theory of the Motion of Fluids (1879), in addition to a general exposition of his subject, discusses "waves of small vertical displacement" (i. e., "long waves" or "waves of translation"), and illustrates by examples drawn from Airy's treatment of tides in canals. Near the close of his book is a "List of memoirs and treatises" pertaining to fluid motion.

In his Hydrodynamics (1895) the tidal theory is set forth in a concise and masterly manner. It is the best exposition of the theory known to the writer. The chapters entitled "Viscosity" and "Equilibrium of rotating masses of liquid," involve the principal discoveries along these lines made by Stokes, Rayleigh, Kelvin, Darwin, Love, Lamb, Poincaré, and others.

132. *Prof. Wm. Harkness*, Washington Observations for 1885, App. III, gives a collection of determinations of the mass of the moon since the time of Newton, adding thereto determinations made by himself from the harmonic constants of over thirty stations. His concluded value from the tides is $0{\cdot}012714 \pm 0{\cdot}000022 = 1/78{\cdot}653 \pm 1.374$ $(= \frac{1}{80} + \delta\mu)$. At the close he gives a "List of works consulted in the preparation of the foregoing paper," and here are given numerous references to recent papers on tides.

Maj. A. W. Baird is the author of a book entitled Manual for Tidal Observations (1886). In the first part are practical directions for locating stations, setting up and caring for tide gauges, and auxiliary (meteorological) instruments. In the second part are directions for carrying out the harmonic analysis in accordance with the system of Thomson and Darwin. The appendix consists of auxiliary tables used in connection with the analysis.

L. d'Auria has contributed several articles to the Journal of the Franklin Institute, among which are the following: "On the measurement of tidal heights" (1879); "On the force of impact of waves," etc. (1890); "A new theory of the propagation of waves in liquids" (1890); "Analytical discussion of the tidal volume admitted into bays and rivers," etc. (1891); "The law of variation of the theoretical amplitude of tidal oscillation," etc. (1891).

In these the meaning of the author is not always clearly set forth; consequently it seems impossible to ascertain just what he has in mind, and why he believes that certain relations obtain. The subjects of these papers are important and his treatment is suggestive; for these reasons they may be worth consulting.

Prof. William Ferrel (1817–1891).

133. Ferrel's Tidal Researches, published by the Coast Survey in 1874, include the greater part of his theoretical work. One of the principal objects of these investigations is the determination of the effects resulting from fluid friction when assumed to vary according to a power of the velocity greater than the first (friction $= -f V^n$). Laplace had generally altogether ignored friction, and Airy had assumed it to be proportional to the first power of the velocity. In either of these cases the fundamental differential equations of motion are linear, but upon Ferrel's assumption they no longer remain so. Dr. Young had assumed friction to be as the square of the velocity, but his treatment is imperfect, inasmuch as it does not involve the equation of continuity. The important and then new subject of shallow-water components is treated at some length in the Tidal Researches, but much more fully in his "Discussion of tides in Penobscot Bay."†

* Brussels, 1882.

† United States Coast and Geodetic Survey Report, 1878.

Ferrel was the first to give, in 1868, any considerable development of the tide-producing potential. This development he reproduces, with some modifications, in his Tidal Researches. Confining our attention to this later treatment, we may describe it as follows:

Laplace's expression for this potential, when developed in multiples of the body's hour angle, gives rise to several distinct parts or classes of terms, which may be written in the general form $N_s \cos s\,(nt + \varpi - \psi)$, or $N_s' \cos s\,(nt + \varpi - \psi')$, according as the moon or sun is considered, s taking the values 0, 1, 2, ... The first part does not contain the hour angle of the disturbing body, the moon, say; the second class has a period a lunar day in length; the third class a half lunar day; the fourth class one-third of a lunar day; on account of the smallness of the last it may be disregarded, for the present at least.

The coefficients of these periodic functions of the moon's hour angle have, at a given place, two elements of variability; the one being the factor $1/r^3$, the other some sine or cosine function of δ, the moon's declination. $1/r^3$ is equivalent to a constant quantity (which is slightly greater than $1/\rho^3$, ρ being the mean value of r) plus comparatively small periodic terms whose arguments or periods readily follow from the expression for the moon's parallax. Here and elsewhere Ferrel employs circular arguments which vary uniformly with the time, or nearly so. The arguments of the principal periodic terms in $1/r^3$ are the moon's mean anomaly, the argument of evection, of variation, twice the moon's mean anomaly, and the mean anomaly of the sun. The circular arguments belonging to the functions of δ, already referred to, are the longitude of the moon and of the lunar node. When $1/r^3$ is multiplied by these functions of δ, terms naturally arise whose arguments are simple combinations of those in the two factors. In this manner the coefficients of the three principal parts of the moon's tide-producing potential are each developed into a number of terms constant or periodic. The periodic terms in that part (N_0) of the potential which does not involve the moon's hour angle, and which give rise to oscillations in the sea level of long period, really constitute a harmonic development. The coefficient (N_1) of the function whose period is one lunar day has no constant term, but its principal term has as argument the longitude of the moon reckoned from the solstice. This coefficient or amplitude is therefore negative during half of each month. The coefficient (N_2) of the function whose period is a half lunar day consists of a constant term together with numerous periodic terms. The most important of these have as arguments the moon's mean anomaly, twice the longitude, the arguments of evection and of variation.

Of course the tide-producing potential of the sun admits of a similar development.

The tide producing potential due to the attraction of both sun and moon may likewise be developed. The terms which do not involve the hour angle of either body are simply added together algebraically. The parts having a half-day period, $N_2 \cos 2\,(nt + \varpi - \psi)$ and $N_2' \cos 2\,(nt + \varpi - \psi')$, give, when combined, a resultant amplitude of the form obtained when two cosine curves are combined into one. The angle or argument, which is twice the moon's hour angle, becomes in the resultant somewhat altered; but this, too, is in accordance with the combination of two simple cosine curves. The expansion of the resultant amplitude (N_2) gives rise to a constant term and to numerous periodic terms, the chief of which has as argument twice the angle between the sun and moon. The arguments of several others have already been mentioned.

If in the diurnal part, the sidereal (or, more properly, tropical) day had been used instead of the lunar, then the coefficient would have had a constant term, and numerous periodic terms; the arguments of the two principal periodic terms being twice the longitude of the moon, and twice the longitude of the sun, both reckoned from the solstice, say.

This nonharmonic development of the potential is in a form for application to observations made upon high and low waters. It shows the theoretical proportions between the various inequalities in the tide. The non-harmonic or inequality methods of Ferrel form an extension to the works of Laplace and Lubbock. He makes use of all observations, and not of certain groups selected for particular purposes as did Laplace; he distributes the observations according to the inequality sought, usually dividing its period into 12 or 24 nearly equal parts; he analyzes the corresponding 12 or 24 values of the ranges or intervals, thereby determining the most probable value of the amplitude and position of the inequality; he compares the ratio of the coefficient to the range of tide with the corresponding ratio in the tide producing potential; the failure of these to agree implies the existence of what Laplace calls "accessory circumstances," or an

incorrect assumed mass of the moon, or both. The greater the number of inequalities treated, the more of these constants can be determined. Ferrel usually determines two besides the correction to the mass of the moon, using therefor the three largest inequalities in the (semidaily) tide.*

As some account of his method of determining the coefficients and epochs of the inequalities appears in § 54, also in § 46, Part III, no further notice will be taken of it here than to refer to Chapter VI of the Tidal Researches, where the tides at Brest are discussed; to his "Discussion of tides in Boston Harbor;"† and particularly to his "Discussion of tides in New York Harbor."‡

In regard to Ferrel's harmonic development of the potential of the tide-producing forces, we will only remark that it is the first ever made—at least with any tolerable completeness; that a number of lunar nodal terms are given which arise from the varying inclination of the lunar orbit to the plane of the equator; and that his numerical values of the coefficients of the sun's tide-producing potential are each affected by a term in $\delta\mu$.§ For, the coefficients of the tide-producing potential of the sun, when expressed as fractions of certain parts of the tide-producing potential of the moon, must involve some assumption regarding the mass of the moon relative to the mass of the earth or sun. Ferrel assumes the mass of the moon 1/80 that of the earth plus another very small fraction $\delta\mu$ of the earth's mass.

134. The fundamental tidal equations are satisfied by assuming the vertical and horizontal displacements of the fluid particle which result from a harmonic term of the potential to be simple harmonic functions with constant coefficients and coperiodic with the term of the potential, friction being ignored or taken to be proportional to the first power of the velocity. But if friction be as a higher power of the velocity, then, although the water be deep, the simple harmonic functions just referred to no longer satisfy the tidal equations, and simple harmonic functions of one-third the period of the others must be included in the expressions for the displacements.

Hence we have obtained as a first result of the effect of friction, which must be regarded as new and important, that *when friction is as a higher power than the first power of the velocity, it produces, in either diurnal or semidiurnal tides, small oscillations with a period which is one-third of that of the principal tide.*

In case of very shallow water, where the amplitude of the vertical oscillation bears a sensible proportion to the depth, quarter-day oscillations must be included in the expressions for the displacements of the particle, the resistance due to friction being either included or ignored.‖

135. *Ferrel's method of determining the moon's mass from harmonic components.*

By the equilibrium theory the amplitudes of all components of the same class (long-period, diurnal, or semidiurnal) should have fixed ratios to one another and so to any one of them. The epochs of all components of a class should be equal to one another. If the speeds of the components were very nearly equal this would, undoubtedly, be very nearly the case; and constant use is made of this fact in inferring one component from another. In passing from one component to another of sensibly different speed, Laplace assumed that the amplitude is altered by a small quantity, proportional to the difference in their speeds. As will presently be seen, this agrees with Ferrel's work only to the first approximation.

Ferrel assumes that the change in the tidal coefficient due to a change of velocity of the disturbing body in right ascension, is not generally proportional to the amount of change in this velocity, as Laplace had assumed.¶

Let i_0 denote the speed per day, expressed in radians, of a component A_0; let i_ϵ or i, the speed of another component A_ϵ, to be compared with A_0; and so

$$i = i_0 + u_\epsilon \tag{270}$$

where u_ϵ denotes the daily difference in speeds expressed in radians. Let the coefficients of the corresponding terms of the tide-producing potential be H_ϵ and H_0 $(=1)$. Let the ratio A_ϵ/A_0 be denoted by R_ϵ; the question arises, how does R_ϵ differ from H_ϵ, because i_ϵ is not exactly equal to i_0?

* Tidal Researches, §§ 19, 25, 56, 73, 182–196.
† United States Coast Survey Report, 1868.
‡ Ibid., 1875.
§ Ibid., 1878, p. 270; Tidal Researches, §§ 28, 29.
‖ Cf. Airy, Tides and Waves, Art. 198; or see under Airy.
¶ United States Coast Survey Report, 1868.

By the equilibrium theory

$$\frac{R_c}{H_c} = 1. \tag{271}$$

But $\frac{R_c}{H_c}$ being a function ϕ of i, $= (i_o + u_c)$,

$$\phi\,(i) = \phi_o + u_c\phi_o' + \frac{u_c^2}{2}\phi_o'' + \quad . \quad . \quad . \quad , \tag{272}$$

where the accent denotes differentiation with respect to i_o. But $\phi_o = R_o/H_o = 1$, and $\phi_o', \frac{1}{2}\phi_o''$, are constants which Ferrel denotes by E, E';

$$\therefore R_c = H_c(1 + u_cE + u^2{}_cE'). \tag{273}$$

Similarly for the epoch,

$$\varepsilon_c = \varepsilon_o + u_cG + u^2{}_cG'. \tag{274}$$

In case of the semidiurnal components, Ferrel's equations for determining E, E', $\delta\mu$ are, adding equivalents in the harmonic notation,*

$$S_2/M_2 = R_1 = (0{\cdot}4582 - 36{\cdot}2\ \delta\mu)\,(1 + 0{\cdot}4255\ E + 0{\cdot}181\ E'), \tag{275}$$

$$\mu_2/M_2 = R_2 = 0{\cdot}0240\ (1 - 0{\cdot}4255\ E + 0{\cdot}181\ E'), \tag{276}$$

$$K_2/M_2 = R_3 = (0{\cdot}1256 - 3{\cdot}2\ \delta\mu)\,(1 + 0{\cdot}4599\ E + 0{\cdot}212\ E'), \tag{277}$$

$$L_2/M_2 = R_4 = -\,0{\cdot}0286\ (1 + 0{\cdot}288\ E + 0{\cdot}052\ E'), \tag{278}$$

$$N_2/M_2 = R_5 = 0{\cdot}1922\ (1 - 0{\cdot}228\ E + 0{\cdot}052\ E'), \tag{279}$$

$$\left[\begin{matrix}\text{lunar}\\ \text{nodal}\end{matrix}\right] R_6 = -\,0{\cdot}0359\ (1 - 0{\cdot}001\ E), \tag{280}$$

$$\left[\begin{matrix}\text{lunar}\\ \text{nodal}\end{matrix}\right] R_7 = 0{\cdot}0359\ (1 + 0{\cdot}461\ E + 0{\cdot}212\ E'). \tag{281}$$

"Where the amplitudes of all the principal components are determined from observation, we get R_c by dividing A_c by A_0, and hence A_0 is thus eliminated . . . from the preceding equations. The first members being thus determined from observation, these equations, or a sufficient number of them for the purpose, can be used in determining the unknown constants in the case of nature, and the correction of the moon's mass. It is readily seen that in these equations, . . . the determination of $\delta\mu$ depends almost entirely upon the first and third, and that . . . the neglect of the terms depending upon E', unless they are large, can have no sensible effect upon the value of $\delta\mu$, and that the effect of neglecting them is thrown almost entirely upon the value of E. When, therefore, the principal object is to obtain the correction of the moon's mass, and a very accurate value of E is not desired, the terms in the equations depending upon E' may be neglected, and then the first and third equations are sufficient for the purpose. All, however, can be used and the most probable values obtained by the method of least squares."

The equations between the amplitudes of the diurnals for the determination of the constants A_0, E, E', and $\delta\mu$ are

$$K_1 = A_1 = (0{\cdot}5306 - 13{\cdot}1\ \delta\mu)\,(1 + 0{\cdot}230\ E + 0{\cdot}053\ E')\,A_0, \tag{282}$$

$$O_1 = A_2 = 0{\cdot}3813\ (1 - 0{\cdot}230\ E + 0{\cdot}053\ E')\,A_0, \tag{283}$$

$$P_1 = A_3 = (0{\cdot}1730 - 13{\cdot}6\ \delta\mu)\,(1 + 0{\cdot}196\ E + 0{\cdot}040\ E')\,A_0, \tag{284}$$

$$\left[\begin{matrix}\text{lunar}\\ \text{nodal}\end{matrix}\right] A_4 = 0{\cdot}084\ (1 + 0{\cdot}231\ E + 0{\cdot}053\ E')\,A_0, \tag{285}$$

$$\left[\begin{matrix}\text{lunar}\\ \text{nodal}\end{matrix}\right] A_5 = 0{\cdot}070\ (1 - 0{\cdot}231\ E + 0{\cdot}053\ E')\,A_0. \tag{286}$$

In §§ 197–228 of his Tidal Researches, Ferrel applies these formulæ to the tides at Liverpool, Portland, Fort Point (Cal.), and Kurrachee.

* Tidal Researches, pp. 91, 92.

In his "Discussion of the tides in Penobscot Bay," United States Coast Survey Report for 1878, he replaces the two lunar nodal components of the diurnal group by the lunar elliptic components Q_1 and J_1, and omits E'. These formulæ become

$$K_1 = (0{\cdot}5306 - 13{\cdot}1\ \delta\mu)\ (1 + 0{\cdot}230\ E)\ A_0, \tag{287}$$

$$O_1 = 0{\cdot}3813\ (1 - 0{\cdot}230\ E)\ A_0, \tag{288}$$

$$P_1 = (0{\cdot}1730 - 13{\cdot}6\ \delta\mu)\ (1 + 0{\cdot}196\ E)\ A_0, \tag{289}$$

$$J_1 = 0{\cdot}011\ (1 + 0{\cdot}458\ E)\ A_0, \tag{290}$$

$$Q_1 = 0{\cdot}052\ (1 - 0{\cdot}458\ E)\ A_0. \tag{291}$$

In a paper by Prof. William Harkness (q. v.), entitled "The solar parallax and its related constants,"* the author has put Ferrel's equations for the moon's mass, etc., into forms better adapted to computation.

136. *On inferring small components.*

Of course the solution of the equations in $\delta\mu$, E and G (E', G' being neglected) render it theoretically possible to infer the amplitudes and epochs of other small components which may be required in the representation of the tide. To illustrate, suppose we wish the amplitude and epoch of Q_1. From the equations in K_1, O_1, and P_1 the quantities $\delta\mu$, E, and A_0 are obtained. These values for E and A_0 being substituted in the equation for Q_1 give its theoretical amplitude. On page 448 of the United States Coast and Geodetic Survey Report for 1882, Ferrel thus finds Q_1 for Port Townsend and Astoria. On account of the large positive value of E, the formula

$$Q_1 = 0{\cdot}052\ (1 - 0{\cdot}458\ E)\ A_0$$

gives in each case a value for Q_1 much smaller than that obtained from harmonic analysis. In fact, Q_1 could have been inferred from O_1 or K_1 by means of its equilibrium ratio much closer than by Ferrel's process. Consequently his remark that his small inferred value of Q_1 is due to a certain shallow water component combining with Q_1 can hardly seem probable.

The epoch of a small diurnal component like Q_1 is inferred by putting

$$\varepsilon_0 = L = \tfrac{1}{2}\ (K_1^\circ + O_1^\circ) \tag{292}$$

$$G = \frac{K_1^\circ - O_1^\circ}{k_1 - o_1} = 0{\cdot}911\ (K_1^\circ - O_1^\circ)\ \text{hours} \tag{293}$$

$$= 0{\cdot}038\ (K_1^\circ - O_1^\circ)\ \text{days}. \tag{294}$$

Then

$$Q_1^\circ = L - 26{\cdot}25\ G \tag{295}$$

where G is expressed in days. On the next page of the Report (l. c.) Ferrel thus determines Q_1° for Port Townsend, Astoria, and San Diego. The agreement with the analysis is very satisfactory.

Similarly he makes use of the equations in S_2, K_2, and N_2, determining $\delta\mu$ and E from the semidiurnal group, but with the modification noted below.†

It is readily seen from an inspection of these equations that they can be satisfied only very imperfectly for Pulpit Cove, within any determined values of $\delta\mu$ and E, and that they can be much better satisfied by multiplying the first members of the equations by an unknown constant. This constant is introduced upon the hypothesis that the tidal components are diminished by the effect of friction which is as a higher power than the first power of the velocity, as I have at various times explained. Upon this hypothesis large tides are diminished by friction more than small ones in proportion to their amplitudes, and hence where there is one large component, as the mean lunar, and a number of much smaller ones, since the amplitudes of the latter are obtained by analysis from the differences between the larger and smaller resultant tides, the smaller components are diminished more than the larger ones in proportion to their magnitudes, unless friction is as the first power of the velocity. If we take the first, third, and fifth of the preceding equations for Pulpit Cove, and introduce a constant factor c, we have—

$$0{\cdot}1574c = (0{\cdot}4582 - 36{\cdot}2\ \delta\mu)\ (1 + 0{\cdot}4255\ E) \tag{296}$$

$$0{\cdot}0469c = (0{\cdot}1256 - 3{\cdot}2\ \delta\mu)\ (1 + 0{\cdot}4599\ E) \tag{297}$$

$$0{\cdot}2082c = 0{\cdot}1922\ (1 - 0{\cdot}228\ E) \tag{298}$$

* Washington Observations for 1885, App. III. † United States Coast and Geodetic Survey Report, 1878, p. 297.

The solution of these equations gives—

$$\delta\mu = 0{\cdot}00263 \quad E = -1{\cdot}164 \quad o = 1{\cdot}166 \tag{299}$$

The solution of all the equations by the method of least squares would give values for these constants differing but little from those above on account of the smallness of the amplitudes in the neglected equations, which gives them little weight. The value of $\delta\mu$ above gives for the moon's mass $\mu = \frac{1}{80}$, which is much too large, as is usually the case where the relations differ much from those of the equilibrium theory. The equations for Liverpool give $\mu = \frac{1}{70}$, and for Kurrachee, where the relations approximate more nearly to those of the equilibrium theory, $\mu = \frac{1}{78.5}$, which is perhaps not very much in error.

In regard to the epoch, we have

$$L = M_2{}^\circ, \tag{300}$$

and G is determined from the values of $S_2{}^\circ$, $N_2{}^\circ$, and $K_2{}^\circ$.

In regard to the effects of shallow-water components upon such quantities as these and $\delta\mu$, he says:*

From the preceding investigation of the shallow-water tides, I think that we can now see clearly why it is that satisfactory and consistent values of the moon's mass have not in general been obtained from the relations of the semidiurnal tides; for these relations are disturbed by the various shallow-water components, which do not enter into the theory of deep-water tides, which has been used in determining the moon's mass. The perfection of the tidal theory, so as to represent accurately the results of observation at all tide stations, and give a correct mass of the moon, depends now mainly upon the study of the shallow-water terms.

With regard to the determination of the moon's mass, from the results so far as obtained the relations of the diurnal tides promise better success in the future than those of the semidiurnal tides. The diurnal tides are not affected by so many of the shallow-water components, and it is probable that these can be determined from the analysis of the observations, since there are two comparatively quite large components with periods differing from those of any others, and hence can be determined by analysis of the observations; and then from the theoretical relations given in Schedule III the others can be, at least approximately, determined, and the components of deep-water tides which they affect can be corrected for their effect. The relations of these corrected results, obtained from the analysis of the observations, should then agree with the theoretical relatives, and give a correct mass of the moon.

137. Chapter IV of the Tidal Researches treats of tides in canals. He naturally goes over much of the ground previously gone over by Airy. As already stated, Ferrel assumed a more general law of fluid friction so that many of Airy's results follow as special cases of Ferrel's. The subjects here considered are canals extending east and west along the equator or parallels of latitude; canals coinciding with a meridian; and shallow canals extending from the sea inland.

Under east and west canals Ferrel notices that:

In the case of friction, . . . the oscillations of each separate component cannot in general vanish, and give rise to a complete nodal point.

There cannot . . . be in general any place in the canal where the vertical oscillations completely vanish.

We might . . . have two canals near each other, extending east and west, of the same length and depth, such as to satisfy (206)† approximately for either the moon or sun, or both, if the canals were not very long and shallow, and if we should suppose the lunar forces to act upon the one and the solar forces upon the other, the lunar and solar tides in the two canals would not only not be at all in proportion to the forces, which is the effect of a large value of E, but also the epochs might be very different in the two, upon which the value of G depends. If we therefore suppose the lunar and solar forces to act upon the same canal, we have the two tides coexisting without interference, at least when friction is as the first power of the velocity, but the epochs of the two differing, that is, the times of high water occurring at different intervals from the times of transit of the moon and sun over some assumed meridian, the high waters of the two do not coincide generally at the times of the syzygies of the moon and sun, and cause the greatest tides, but some time before or after. . . . It is evident from a mere inspection of the expressions, that it depends entirely upon circumstances whether E and G are positive or negative, that is, whether the lunar or the solar tide is the greater in proportion to the forces, and whether the maximum of the resultant tide happens before or after the syzygies. This will be also shown in a subsequent part of the chapter by means of actual computations in various assumed cases.

In § 145 Ferrel gives a table for various assumed conditions, or rather constants, relating to tides in canals, such as the length, depth, and friction constants. From these he computes the constants A_0, L_0, E, G, F, F'. From the computed values he notices that friction may increase the amplitude of the tide; the amplitudes for different assumed conditions may vary widely; it may be high water at one end of a canal while it is almost low water at the other end; the values

* United States Coast and Geodetic Survey Report, 1878, p. 299.

† I. e., such length and depth as will give very large vertical oscillations.

of E, G, and F' may be either positive or negative, and their values may vary greatly for the different assumed conditions.

The equations belonging to a canal coinciding with the equator apply to shallow canals extending from the sea inward, "by neglecting the forces in these equations, and regarding ϖ as expressing distance in terms of the earth's radius, instead of longitude."

This renders the fundamental equations of motion very simple, especially if friction be also neglected.

Ferrel finds, in § 143—

> That the equation of continuity in a shallow canal cannot be satisfied without a change of mean level, and that the periodic vertical oscillations are about this disturbed mean level, instead of the undisturbed in the case of no oscillations. This is a new and important result, and shows that where the water is shallow the true undisturbed level cannot be obtained from any number of tidal observations taken at equal intervals through all parts of the phase of the tide, but that to the level thus obtained a correction must be applied . . . to reduce it to the true level, which . . . is in some places positive and in others negative.*

In §§ 248–253, Ferrel notes instances taken from nature to which these statements seem to apply.

138. Chapter V is devoted to the theory of tides upon an ellipsoid of revolution, and is largely devoted to Laplace's solutions of tidal equations.

In case of the diurnal tide everywhere vanishing if the depth of the water were uniform, Ferrel contends that although Laplace's result is correct, his manner of solution is incomplete in that it fails to show that the problem remains indeterminate until the proper assumption is made regarding the form of a', the excess of the height of tide over the equilibrium height.

Ferrel first published his views on this subject in Gould's Astronomical Journal, Vol. IV (1856).

In regard to the indeterminate coefficient of x^4, i. e. A_4, he contends that, since ever so little friction must destroy the initial conditions, thus making the oscillations depend entirely upon the disturbing force and vanish with it, the value of A_4 to be used must be zero. Finally, for various depths assumed by Laplace, Ferrel computes anew the corresponding ranges of tide, and finds them, he believes, much more conformable to nature. For references to the late papers of Ferrel and others on this question, see footnote under Laplace.

139. Chapter VI is devoted to the discussion of high and low waters by the inequality method already referred to. The next chapter gives various comparisons between theory and observation, the most of which have likewise been referred to.

Chapter VIII gives some account of the tides of the North Atlantic Ocean (whose size he attributes to the fact that a canal extending from Europe to America, thus closed at both ends, and having the depth of the Atlantic, has for its free period approximately a half lunar day); † the tides of the Gulf of Mexico, of the Island of Tahiti, and of Lake Michigan; §§ 248–253, already referred to, are devoted to observed variations in sea level from place to place. The chapter closes with an account of different forms of tidal curves.

140. Chapter IX is upon the tidal retardation of the earth's rotation. This brings the author back to his first scientific paper, and which was published in Gould's Astronomical Journal, Volume III (1853), pages 138–141.

In a note entitled "Questions of priority," published in the Journal, Volume IX (1890), page 189, and quoted below, Ferrel again makes reference to this subject.

In this 1853 paper he makes the first numerical estimate of tidal retardation in the earth's axial rotation based upon mathematical principles, although Kant had in 1754 made a rough estimate of it, and it seems that J. R. Mayer ‡ and others had published something upon the subject. At the time of writing this paper, Ferrel supposed that the then observed secular acceleration of the moon was fully accounted for by Laplace's theoretical expression for the same. He was, therefore, led to believe that the tidal retardation was counteracted by a gradual cooling and shrinking of the earth. He points out that if earth and moon are similarly constituted, the retardation in the moon's axial rotation due to the earth must be to the moon's effect upon the earth's rotation as the square of the mass of the earth is to the square of the mass of the moon.

Bertrand was the first to show, about 1866, that the real motion of the moon in her orbit

* Cf. Tidal Researches, § 183. † See § 31. ‡ See Phil. Mag., Vol. 25 (1863), p. 403.

(not merely the motion as estimated by the period of the earth's rotation) was affected because of the tides upon the earth. This gives a retardation more than one-third as great as the apparent acceleration. In his Tidal Researches Ferrel puts these two effects together and finds, from the value of the moon's secular acceleration known by other means, that the tidal displacement due to friction ought to be about 2°. As noted below, he had previously (in 1864) shown tidal friction to be the probable cause of the small outstanding acceleration of the moon.

His note entitled "Questions of priority" is as follows:

> It is well known that there is a discrepance between the times of the computed and observed phenomena of certain ancient eclipses, which indicates that there has been a retardation of the earth's rotation. A plausible explanation of such a retardation is, that it is due to the effect of friction upon the tidal wave. The first suggestion of this explanation is usually attributed to Delaunay. In Thomson and Tait's Natural Philosophy it is stated that "About the beginning of 1866 Delaunay suggested that the true explanation of the discrepance might be a retardation of the earth's rotation by tidal friction." Delaunay's note on this subject was communicated to the Academy at Paris on December 11, 1865 (*Comptes Rendus*, Vol. CI, p. 1023). My "Note on the Influence of the Tides in Causing an Apparent Acceleration of the Moon's Mean Motion" was read before the American Academy of Arts and Sciences on December 13, 1864 (*Proc.* Vol. VI, pp. 379–383). In this note it was shown that upon the hypothesis of only a very moderate displacement of the vertex of the tidal wave by friction, the resulting amount of retardation of the earth's rotation would furnish an explanation of the discrepance between the computation and observation of the ancient eclipses.
>
> The writer also claims that the first suggestion that the cause of the exact equality between the time of the moon's rotation in its orbit and on its axis is due to the effect of the attracting forces upon the lunar tides, was given in his paper "On the Effect of the Sun and Moon upon the Rotary Motion of the Earth" (*Astr. Jour.*, 1853, III, pp. 138–142).*

G. F. Becker, Am. Jour. Sci., Vol. 5 (1898), p. 108, states that Laplace, in the 1824 edition of the Systém du Monde, refers the equality of the moon's periods of rotation and revolution to tidal action caused by the earth's attraction in the still fluid moon; and that Kant considered the tidal retardation in the moon's axial rotation as well as that in the earth's.

In a paper published in the Astronomical Journal, Vol. V (1858), pp. 97–100, he examines the deflected course taken by a body moving upon or near the earth's surface because of the earth's rotation. It has an important bearing upon the general circulation of the ocean and atmosphere. Among other things he establishes that a moving body in the northern hemisphere is always deflected to the right, and in the southern to the left. The radius of curvature of the path is always inversely as the sine of the latitude. For a small range of motion the path is circular, but for a large range it is not; the path is, however, self-returning.

On pages 113, 114 of the same volume is a note supplementary to the preceding paper. He remarks that the deductions from theory have been verified by some delicate experiments of Foucault.†

Besides devising numerous methods for the prediction of tides,‡ Ferrel in 1880 invented a tide-predicting machine. His published account of the machine and its use is found upon pp. 253–272, of the Survey Report for 1883. It was designed with special reference to the prediction of high and low waters, thereby differing from Thomson's machine which simply gives the continuous curve. The theory of the machine is also given in §§ 58 and 60 of Part III.

His paper entitled "Report of meteorological effects on tides," found in the Survey Report for 1871, refers to observations at Boston.

141. *Sir William Thomson (Lord Kelvin).*

Thomson seems to have been led to the study of tides through his work upon certain physical problems which involve their consideration. Among these problems is that of the rigidity of the earth, which he considers in the Philosophical Transactions of the Royal Society for the year

---

* Cf. D. Vaughan, "Secular variation in lunar and terrestrial motion from the influence of tidal action," B. A. A. S. Report, 1857. Thomson, Phil. Mag., Vol. 31 (1886), p. 533, says that Ferrel was the first to evaluate tidal retardation. Abbott, Elementary Theory of Tides, pp. 22 et seq. Kelvin, Popular Lectures and Addresses, Vol. II (1894), pp. 10–44, 64–72. Ball, Time and Tide (1895), pp. 58–68. See under Thomson and under Garbett.

† See Am. Jour. of Science and Arts, Vol. XV, p. 263, and Vol. XIX, p. 141.

‡ United States Coast Survey Report, 1868, pp. 87–95; 1875, pp. 215–221; United States Coast and Geodetic Survey Report, 1878, pp. 299–304.

1863.* He finds that the earth's mass must have an effective rigidity at least as great as that of steel, otherwise the effect of its yielding would have been noticeable upon the amount of the precession or the nutation. Moreover, the earth must be for the most part solid and not fluid as had generally been maintained; for, a thin crust would have to be of fabulous rigidity to prevent tides in the molten matter within. The effect of any elastic yielding is, of necessity, to diminish the range of tide. Calling this range unity for an ocean covering a rigid sphere, the elastic yielding of the nucleus would cause the range to become $\frac{2}{3}$ or $\frac{2}{5}$ according as the rigidity of the nucleus is assumed to be that of steel or of glass.

Supposing the long-period tides to nearly conform to the equilibrium theory, Thomson and subsequently Darwin were led to the careful study of such oscillations. A discussion by the latter of tides observed in European and Indian ports is given in Thomson and Tait's Natural Philosophy.† Poincaré notices that the results of this discussion would be in error by a $\frac{3}{2}\frac{3}{2}$ part, for a sea covering the entire earth, because the attraction of the disturbed water is there disregarded.‡ Darwin concludes that because of the water's inertia these tides (the small nineteen-yearly one excepted) do not conform to the equilibrium theory sufficiently close for making valid the earth's rigidity derived from them.§

Thomson's paper upon the tidal retardation of the earth's rotation appears in Volume 31 (1866) of the Philosophical Magazine; also in Thomson and Tait's Natural Philosophy.‖

In Vol. II (1894) of Thomson's Popular Lectures and Addresses entitled Geology and General Physics will be found a popular treatment of the tidal retardation of the earth's rotation, given at the close of the address entitled "On geological time." In this volume are papers which treat of the internal constitution and the rigidity of the earth, viz., "Review of evidence regarding the physical condition of the earth" and "The internal condition of the earth; as to temperature, fluidity, and rigidity." Another paper is entitled "Polar ice-caps and their influence in changing sea levels."

In about 1867 Thomson devised the harmonic analysis for tidal observations. In perfecting it he has been aided by J. C. Adams, E. Roberts, and more particularly by G. H. Darwin. A historical sketch of this subject is given beyond.¶

In about 1872 he invented the tide-predicting machine, although the first machine for actual work was not constructed until about 1876. For a brief account of tide-predicting machines and references to writings connected therewith, see § 57, Part III, of this manual. It is hardly necessary to say that this invention has proved to be thoroughly practical.

The Thomson harmonic analyzer was invented in about 1878. Some account of this machine, along with references pertaining thereto, is given in § 56, Part II.

Among the statical problems given in Thomson and Tait's Natural Philosophy are the equilibrium theory of tides, and the effect of lunar and solar attraction on apparent terrestrial gravity.

If a sphere be but partially covered with water, its surface of equilibrium, even if the sphere turn upon its axis very slowly, cannot generally coincide with that of a sphere entirely covered with water to the same depth. The surface (or portions of surface) will, however, be *parallel* at any given instant to the instantaneous surface of the covered sphere. Upon this fact rests Thomson's "corrected equilibrium theory." Bernoulli treated the case of a small inclosed body of water upon this assumption, but Thomson was the first to suggest its application to the ocean. The effect of the land is to modify the amplitudes and epochs in the expressions for the lunar and solar tides. Since the equilibrium theory is not concerned with depths, these modifications depend upon surface integrals or, rather, quadratures.** The work of making these quadratures

* "On the rigidity of the earth," pp. 573–582. "Dynamical problems regarding elastic spheroidal shells and spheroids of incompressible liquid," pp. 583–616. Cf. Proc. Roy. Soc., Vol. 12 (1862–63), pp. 103, 104; Phil. Mag., Vol. 25 (1863), pp. 149–151.

† Ed. 1883, §§ 847, 848.

‡ Journal de Mathématiques pures et appliquées, Vol. 2 (1896), p. 80.

§ Proc. Roy. Soc., Vol. 41 (1886), pp. 339, 342. See B. A. A. S. Report 1886, pp. 56–58; also under Laplace.

‖ Section 830.

¶ See B. A. A. S. Reports, 1868, I, pp. 489–510; 1870, I, pp. 120–151; 1871, I, pp. 201–207; 1872, I, pp. 355–395; 1876, I, pp. 275–307.

** Natural Philosophy, Ed. 1867, or 1883, § 808.

has been performed by Darwin for a long-period oscillation,* and by H. H. Turner for a diurnal and a semidiurnal oscillation.†

It was the intention of Thomson to give the dynamical treatment of tides in a subsequent volume of the Natural Philosophy. The continuation of this work beyond the first volume has, however, been abandoned.

It seems that Darwin's restatement of Laplace's theory is in accordance with suggestions by Thomson.‡ Thomson has worked out additional solutions for Laplace's tidal equation § and defended Laplace's solution in the case of a semidiurnal tide when the ocean is of uniform depth.‖

142. *Prof. George H. Darwin.*

In the Philosophical Transactions for 1863 Thomson gives, with important physical deductions, an independent solution of a problem previously solved by Lamé, viz., the state of strain of an elastic sphere under given stresses. In the Transactions for 1879¶ Darwin treats the case of a viscous sphere or spheroid instead of an elastic sphere. He finds that the equations of flow in an incompressible viscous fluid are analogous to those of strain for an incompressible solid. He therefore finds it possible, in a measure, to adapt Thomson's work upon bodily tides in the elastic sphere to his case of a viscous sphere. His results regarding the effective rigidity of the earth are in the main confirmatory of Thomson's. He finds a remarkably simple rule for making a comparison between tides in a fluid sphere and in a viscous sphere, also the effect of the internal yielding on oceanic tides.**

Results from Darwin's paper on the precession of a viscous spheroid are subsequently adapted by him to the making of a numerical estimate of the retardation of the earth's axial rotation.††

In the Proceedings of the Royal Society for 1879 he gives a paper entitled "The determination of the secular effects of tidal friction by a graphical method," where first appear his well-known diagrams illustrating the evolution of the earth-moon system.‡‡

Outline of Darwin's theory of tidal evolution.—Suppose the earth to be in liquid or semiliquid condition and to be rotating rapidly upon its axis, the period of rotation being from two to four hours. The centrifugal force may be sufficient of itself to cause the matter now constituting the moon to become detached from the earth, whether as one body or as a chain of meteorites constituting a ring, is immaterial, provided the latter soon come together and make up the moon. If the centrifugal force be not sufficient for the accomplishment of this, it may happen that the length of a half day approximately coincide with the period of free bodily oscillation of the earth, which is probably a little less than two hours. The periodic tidal forces from the sun will cause the successive tides to rise higher and higher, until finally a portion of matter will be detached. At first earth and moon revolve nearly as a single rigid body about their common center of gravity; the earth-day and the moon-day are each equal to their "month."

At the time here considered, the energy of the earth-moon system is a maximum; for as yet no energy has been dissipated by tidal friction due to tidal currents, which each body is to set up in the other just as soon as their periods of axial rotation differ from their "month" or period of revolution about their common center of gravity.

It is a principle of dynamics that the sum of the moments of momentum of all rotations and revolutions of a system not influenced by extraneous forces is constant, however the distances, velocities, and the amount of energy may vary. For simplicity of conception, the rotation of the moon upon her axis can at first be ignored or lost sight of. The moon produces tidal currents in the earth, thereby slowing down the earth's axial rotation and lengthening the earth-day. By the

---

* Ibid., Ed. 1883, §§ 810, 848.

† Proc. Roy. Soc., Vol. 40, 1886, pp. 303-315.

‡ Phil. Mag., Vol. 50 (1879), pp. 388-402.

§ Phil. Mag., Vol. 50 (1875), pp. 279-284, 388-402.

‖ See under Laplace.

¶ "On the bodily tides of viscous and semi-elastic spheroids, and on the ocean tides upon a yielding nucleus," pp. 1-35. "On the precession of a viscous spheroid, and on the remote history of the earth," pp. 447-538. "Problems connected with the tides of a viscous spheroid," pp. 539-593. See Proc. Roy. Soc., Vols. 27 (1878), pp. 419-424; 28 (1878-79), pp. 194-199.

** Phil. Trans., 1879, pp. 15, 28. B. A. A. S. Report, 1882, pp. 472-475. ††Thomson and Tait, Nat. Phil., App. [G. a].

‡‡ Also found in Thomson and Tait, Nat. Phil., App. [G. b], and in Enc. Brit., Art. "Tides."

principle just referred to this necessitates a retreating of the moon and so, by Kepler's third law, an increase in the length of the "month." The length of the day will go on increasing until day and month shall become equal, and computation shows this day or month to be about two of our present months in length. The energy of the system will then be a minimum, for no tides or tidal friction can then exist. The earth-moon system will then be in stable equilibrium, and not in unstable equilibrium as it was when it possessed a maximum amount of energy. The energy curve of the diagrams already referred to, has orbital momenta as abscissæ and axial momenta as ordinates. It has one real maximum and one real minimum corresponding to the two critical periods already described.

There is one stage in the evolution when the month has a maximum number of days. For the earth-moon system, as here considered, this number is 27, or about the present number. In the paper on the precession of the viscous spheroid (Phil. Trans. 1879), where account is taken of solar tidal friction and the obliquity of the ecliptic, this number is found to be 29. Consequently we have passed through the stage of the greatest number of days in the month, although the month now is really longer than ever before, owing to the increase in the length of the day.

The tides in the moon, due to the earth's attraction, have already caused her day to be one month in length, and tides in the earth due to the sun must finally cause the earth to revolve upon its axis once in a year, whatever length the year may then have.

A popular treatment of tidal evolution is given by *Ball* in a book entitled Time and Tide.

Darwin's work upon the harmonic analysis has been largely in the nature of perfecting methods for its application. He drew up the reports of the Tidal Committee, which appear in the British Association Reports for the years 1883, 1884, 1885, and 1886.

The report for 1883 is intended "to systematize the exposition of the theory of harmonic analysis, to complete the methods of reduction, and to explain the whole process."

The report for 1886 contains, among other things, a method devised by Darwin for analyzing a short series of hourly ordinates, and a method of prediction; these were designed for the Admiralty Manual, where they may also be found.

His more extended method of tidal prediction appears in the Philosophical Transactions for 1891.

He devised a method for the harmonic analysis of high and low waters, which is published in the Proceedings of the Royal Society, Volume 48 (1890).

A concise treatment of the subject of tides by Darwin is contained in the Encyclopædia Britannica, ninth edition.

The brothers George and Horace Darwin have made a series of interesting experiments for a committee appointed by the British Association on the measurements of the lunar disturbance of gravity, for the purpose of throwing some light on the elastic yielding of the earth. These are described in the Association Reports for 1881 and 1882; they are also briefly mentioned in Thomson and Tait's Natural Philosophy, § 818′.

Historical sketch of the harmonic analysis.

143. In the harmonic treatment it is supposed, as indicated by the name, that the tide at any given place consists of simple harmonic oscillations, whose periods and amplitudes remain constant—at least for a considerable time. It now seems almost as natural to adopt a series of periodic terms for the expression of the tide as for the "equations" of the motions of the sun and moon. The reasons why tidal workers before Thomson (in about 1867) did not have recourse to such a series seem to be, 1st, the fact that upon the coasts of Europe, where the tides important to navigation were first carefully studied, the tide wave is almost wholly semidiurnal in its character; that is, the two high waters or the two low waters of a day are almost equal in every respect, and so the phenomenon of rise and fall is comparatively simple; 2d, the custom of observing only the high and low waters (in many cases only the former) instead of the entire tidal curve; and, 3d, the idea that tidal work meant rough work, and so did not necessitate an elaborate scheme which, upon its face, seemed to involve more labor than did the less systematic methods.

Accordingly the tide was assumed to be composed of two simple waves, one due to the moon and one to the sun. Each had a variable amplitude and period due to the body's varying parallax and declination. The resultant tide was given (as now in the British Tide Tables) by means of a series of tables, based in part upon observations at the port, which generally had the hour of the moon's transit as one of their arguments. Predictions obtained by means of such tables usually made no distinction between the two tides of a day although we find the diurnal inequality described by Colepresse and Sturmy in the Philosophical Transactions for 1668, and Laplace had pointed out that it was due to oscillations of approximately daily periods. But at places where the diurnal inequality is large, the want of a systematic procedure became strongly felt. For, the greater the number of important inequalities in the tide, the greater the difficulty in disentangling them; and, moreover, a long series of observations becomes necessary.

The foundations of the harmonic analysis were laid by Laplace. For, he enunciated the principle of forced oscillations; he introduced tidal bodies having uniform motions; he showed how to develop the tide-producing potential into a series of periodic terms, and pointed out the more important harmonic constituents of the astronomical tide; he developed the method of least squares sufficiently far for making it applicable to the determination of the coefficients of a sine-and-cosine function of an angle and its harmonics. But he did not attempt an analysis of equidistant ordinates based upon this knowledge, nor did he completely develop the tide-producing potential.

Dr. Thomas Young suggested the importance of observing and analyzing the entire tidal curve, rather than the high and low waters merely.

Airy showed that in shallow water the difference between the duration of fall and of rise is due to the presence of an oscillation having half the period of the tide wave. Moreover, he applied an harmonic analysis to the tide wave, thus determining, from day to day, the fundamental oscillation and its numerous harmonics. His method made use of the entire curve, and not the points of maxima and minima merely.

144. In the year 1867 the British Association, upon the motion of Sir William Thomson, appointed a committee for the purpose of promoting the extension, improvement, and harmonic analysis of tidal observations. Thomson's statement to the other members of the committee, with some corrections and additions, is given in the British Association Report for 1868, and from this the following, including footnotes, is taken:

The chief, it may be almost said the only, practical conclusion deducible from, or at least hitherto deduced from, the dynamical theory is, that the height of the water at any place may be expressed as the sum of a certain number of simple harmonic functions * of the time, of which the periods are known, being the periods of certain components of the sun's and moon's motions. † Any such harmonic term will be called a tidal constituent, or sometimes, for brevity, a tide. The expression for it in ordinary analytical notation is $A \cos nt + B \sin nt$; or $R \cos (nt - \varepsilon)$, if $A = R \cos \varepsilon$, and $B = R \sin \varepsilon$; where t denotes time measured in any unit from any era, n the corresponding angular velocity (a quantity such that $\frac{2\pi}{n}$ is the period of the function), R and ε the amplitude and the epoch, and A and B coefficients immediately determined from observation by the proper harmonic analysis (which consists virtually in the method of least squares applied to deduce the most probable values of these coefficients from the observations).

The chief tidal constituents in most localities, indeed in all localities where the tides are comparatively well known, are those whose periods are twelve mean lunar hours, and twelve mean solar hours respectively. Those which probably stand next in importance are the tides whose periods are approximately twenty-four hours. The former are called the lunar semidiurnal tide, and solar semidiurnal tide; the latter, the lunar diurnal tide and the solar diurnal tide. ‡ There are, besides, the lunar fortnightly tide and the solar semiannual tide. § The diurnal and the semidiurnal tides have inequalities depending on the eccentricity of the moon's orbit round the earth, and of the earth's round the sun, and the semidiurnal have inequalities depending on the varying declinations of the two bodies. Each such inequality of any one of the chief tides may be regarded as a smaller superimposed tide of period approximately equal; producing, with the chief tide, a compound effect which corresponds precisely to the discord of two simple harmonic notes in music approximately in unison with one another. These constituents may be

* See Thomson and Tait's 'Natural Philosophy', §§ 53, 54.

† See Laplace, 'Mécanique Céleste', liv. iv. § 16. Airy's 'Tides and Waves', § 585.

‡ See Airy's 'Tides and Waves', §§ 46, 49; or Thomson and Tait's 'Natural Philosophy', § 808.

§ See Airy's 'Tides and Waves', § 45, or Thomson and 'Tait's Natural Philosophy', § 808.

called for brevity elliptic and declinational tides. But two of the solar elliptic diurnal tides thus indicated have the same period, being twenty-four mean solar hours. Thus we have in all twenty-three tidal constituents:

	Coefficients of t in arguments. Lunar.	Solar.
The lunar monthly and solar annual (elliptic).	$2 \quad \sigma - [\varpi]$	η
The lunar fortnightly and solar semiannual (declinational).	$2 \quad 2\sigma$	2η
The lunar and solar diurnal (declinational).	$4 \begin{cases} \gamma \\ \gamma - 2\sigma \end{cases}$	$\begin{cases} \gamma \\ \gamma - 2\eta \end{cases}$
The lunar and solar semidiurnal.	$2 \quad 2(\gamma - \sigma)$	$2(\gamma - \eta)$
The lunar and solar elliptic diurnal.	$7 \begin{cases} \gamma + \sigma - \varpi \\ \gamma - \sigma + \varpi \\ \gamma - \sigma - \varpi \\ \gamma - 3\sigma + \varpi \end{cases}$	$\begin{cases} \gamma + \eta \\ \gamma - \eta \\ \gamma - \eta \\ \gamma - 3\eta \end{cases}$
The lunar and solar elliptic semidiurnal.	$4 \begin{cases} 2\gamma - \sigma - \varpi \\ 2\gamma - 3\sigma + \varpi \end{cases}$	$\begin{cases} 2\gamma - \eta \\ 2\gamma - 3\eta \end{cases}$
The lunar and solar declinational semidiurnal.	$2 \quad 2\gamma$	2γ

Here γ denotes the angular velocity of the earth's rotation, and σ, η, ϖ those of the moon's revolution round the earth, of the earth's round the sun, and of the progression of the moon's perigee. The motion of the first point of Aries, and of the earth's perihelion, are neglected. It is almost certain that the slow *variation* of the lunar declinational tides due to the retrogression of the nodes of the moon's orbit, may be dealt with with sufficient accuracy according to the equilibrium method; and the inequalities produced by the perturbations of the moon's motion are probably insensible. But each one of the twenty-three tides enumerated above is certainly sensible on our coasts. And there are besides, as Laplace has shown, very sensible tides depending on the fourth power of the moon's parallax,* the investigation of which must be included in the complete analysis now suggested, although for simplicity they have been left out of the preceding schedule. The amplitude and the epoch of each tidal constituent for any part of the sea is to be determined by observation, and cannot be determined except by observation. But it is to be remarked that the period of one of the lunar diurnal tides agrees with that of one of the solar diurnal tides, being twenty-four sidereal hours; and that the period of one of the semidiurnal lunar declinational tides agrees with that of one of the semidiurnal solar declinational tides, being twelve sidereal hours. Also that the angular velocities $\gamma - \sigma + \varpi$ and $\gamma - \sigma - \varpi$ are so nearly equal, that observations through several years must be combined to distinguish the two corresponding elliptic diurnal tides. Thus the whole number of constituents to be determined by one year's observation is twenty. The forty constants specifying these twenty constituents are probably each determinable, with considerable accuracy, from the data afforded in the course of a year by a good self-registering tide-gauge, or from accurate personal observations taken at equal short intervals of time, hourly for instance. Each lunar declinational tide varies from a minimum to a maximum, and back to a minimum, every nineteen years or thereabouts (the period of revolution of the line of nodes of the moon's orbit). Observations continued for nineteen years will give the amount of this variation with considerable accuracy, and from it the proportion of the effect due to the moon will be distinguished from that due to the sun. It is probable that thus a somewhat accurate evaluation of the moon's mass may be arrived at.

The methods of reduction hitherto adopted,† after the example set by Laplace and Lubbock, have consisted chiefly, or altogether, in averaging the heights and times of high water and low water in certain selected sets of groups. Laplace commenced in this way, as the only one for which observations made before his time were available. How strong the tendency is to pay attention chiefly or exclusively to the times and heights of high and low water, is indicated by the title printed at the top of the sheets used by the Admiralty to receive the automatic records of the tide-gauges; for instance, "Diagram, showing time of high and low water at Ramsgate, traced by the tide-gauge." One of the chief practical objects of tidal investigation is, of course, to predict the time and height of high water; but this object is much more easily and accurately attained by the harmonic reduction of observations not confined to high or low water. The best arrangement of observations is to make them at equi-distant intervals of time, and to observe simply the height of the water at the moment of observation irrespectively of the time of high or low water. This kind of observation will even be less laborious and less wasteful of time in practice than the system of waiting for high or low water, and estimating by a troublesome interpolation the time of high water, from observations made from ten minutes to ten minutes, for some time preceding it and following it. The most *complete* system of observation is, of course, that of the self-registering tide-gauge which gives the height of the water-level above a fixed mark every instant. But direct observation and measurement would probably be more *accurate* than the records of the most perfect tide-gauge likely to be realized.

In this paper the short-period tides treated are K, L, M, N, O, and S, each of which has a fictitious moon dividing time into component days and hours. As the heights are read upon the mean solar or S hours, a factor (afterwards called the augmenting factor) slightly greater than

[* The chief effect of this at any one station is a *ter-diurnal* lunar tide, or one whose period is eight lunar hours. A probable indication of this has been obtained from the Ramsgate tidal diagrams of 1864 . . . .]

† See 'Directions for reducing tidal observations,' by Staff-Commander Burdwood, London, 1865, published by the Admiralty; also Professor Haughton on the 'Solar and Lunar Diurnal Tides on the Coast of Ireland,' Transactions of the Royal Irish Academy for April, 1854.

unity has to be applied to all sums (or rather to the amplitudes or component amplitudes) except those in the S summations. The sums belonging to any component summation are assumed to be capable of being represented by the Fourier series,

$$\begin{aligned} &A_0 + A_1 \cos nt + A_2 \cos 2\,nt + \quad . \quad . \quad . \quad + A_8 \cos 8\,nt \\ &\quad + B_1 \sin nt + B_2 \sin 2\,nt + \quad . \quad . \quad . \quad + B_8 \sin 8\,nt \end{aligned} \tag{301}$$

The most probable values of these coefficients are found by Laplace's method of least squares.

The tabular forms and rules given by Mr. Archibald Smith, and published by the Admiralty, to be used for the harmonic reduction of the deviation of ship's compasses, have been adopted *mutatis mutandis*, and have proved very convenient.

In regard to eliminating the effects of other components, he says:

The next step followed was to find corrections upon each summation for the influence of the tides determined by the other summations, these corrections, for a second approximation, being calculated on the supposition that the first approximate values of A_1, B_1, A_2, &c., already found, are correct.

Having called attention to the shallow-water components brought out from the year's analysis at Ramsgate, he says:

The shallow-water tides referred to above depend on the rise and fall of the tide, amounting to some sensible part of the whole depth of the water, or, which comes to the same, the horizontal velocity of the water being sensible in comparison with the velocity of propagation of a long wave, through some considerable portion of the sea which sensibly influences the tides at the point of observation. Helmholtz's explanation of compound sounds, according to which two sounds, each a simple harmonic, having mt, nt for their arguments, give rise, if loud enough, to sounds having for their arguments $(m+n)\,t$, $(m-n)\,t$, suggests that the compound action of the solar and lunar semidiurnal tides, must give rise to shallow-water tides whose arguments are $2\,(\sigma-\eta)\,t$ and $2\,(2\gamma-\eta-\sigma)\,t$. It is intended with the least possible delay to perform averagings with a view to determine these tides. The great influence of the British Channel, and the large extent of it through which the shallow-water condition specified above is fulfilled, makes it probable that the new tidal constituents now anticipated will be found sensible.

In a supplementary report E. Roberts determines, simultaneously by successive approximations the coefficients of five long-period tides, viz.: monthly,* fortnightly (declinational), fortnightly (synodical), annual, and semiannual.

In the next report of the Tidal Committee, published in the British Association Report for 1870, the additional components λ, μ, and ν are included in the schedule. A test is made of the harmonic method upon the Karachi tide, which has large diurnal components.

In the report for the committee, drawn up by Roberts and found in the British Association Report for 1871, the components J, Q, R, and T have been added to those already mentioned.

In the report found in the British Association Report for 1872, certain tides have the symbols 2SM, MS, 3MS, 3SM assigned them. A brief development of the tide potential is given.

In the report of the Tidal Committee for the year 1876, drawn up by Thomson, are tables showing the relative magnitudes of the components according to the equilibrium theory. These are obtained by developing the tide-producing potential of the sun and moon into a series of sine or cosine terms whose arguments increase uniformly with the time.

In this connection it should be noted that Ferrel gives, in the Coast Survey Report for 1868, a development of this potential, not into simple harmonic terms, but into a series of terms suitable for representing the inequalities in the high or low waters. In his Tidal Researches (1874) a harmonic development is also given. He naturally introduces lunar nodal components to account for the varying obliquity of the lunar orbit to the plane of the equator. Thomson dispenses with these by making the theoretical coefficients and epochs slightly variable, in accordance with the longitude of the moon's node. This is justifiable because tidal components whose speeds are equal, or very nearly so, must preserve, very nearly, their (equilibrium) theoretical relations to each other, as the works of Laplace and Airy go to establish. In fact, the case would be the same for any reasonable law of fluid friction.

In the Coast and Geodetic Survey Report for 1878, Ferrel gives some description of the harmonic analysis in general. Here he supplements the work on harmonic analysis found in his Tidal Researches by giving a number of schedules for the shallow-water components. These

* I. e. monthly (elliptic) not monthly (declinational) as implied in this report; pointed out by Roberts as stated in B. A. A. S. Report 1870, I, p. 121.

show how the amplitude, speed, argument, and epoch of a given component are related to like quantities of other components. He writes out elimination formulæ for a series a year in length. He gives formulæ and tables for the effect of the lunar nodal components upon the amplitudes and epochs of the principal components having almost the same speeds.

A report of a tidal committee consisting of Profs. G. H. Darwin and J. C. Adams, drawn up by the former and published in the British Association Report for 1883, gives a complete working manual of the system. The tide-producing potential is developed into a series of cosine terms as in §§ 38–44, Part II. The amplitudes and epochs as obtained from the analysis are to be so treated as to make the results from different years (at the same station) comparable with one another. Tables for this purpose accompany the report. Baird's Manual for Tidal Observations, 1886, gives more extensive tables, together with practical directions in carrying out the analysis. "Computation forms for the reduction of tidal observations" were prepared by Darwin and published in 1884 These indicate how the hourly heights are to be copied for the different kinds of summation. They also show how the partial or hourly sums are to be treated in the analysis.

145. In the year 1885 L. P. Shidy, of the Coast and Geodetic Survey, devised a set of stencils, or perforated sheets, fully described in Part II, which has done away with the copying process at this office.

In the Proceedings of the Royal Society, Volume 52 (1892), pages 345 et seq., Darwin describes a system of strips or scales for indicating how the various summations are to be made. He also mentions Dr. Börgen's tracing-paper sheets, which are substantially the stencils just referred to—the tracing paper being transparent answers the purpose of the holes cut through the stencil sheets.

The Thomson harmonic analyzer and other mechanical aids to analysis and prediction are given in Parts II and III.

At present the harmonic analysis is the working system in nearly all countries where tidal work is carried on. The published results are already extensive. We may here refer to some of the principal collections of harmonic constants:

Proceedings of the Royal Society of London, 1885, 1889. Reports of the Survey of India. Van der Stok's recent work entitled Wind and Weather, Currents, and Tidal Streams in the East Indian Archipelago. Tide Tables and Reports of the United States Coast and Geodetic Survey.

Note on Fourier series.—In connection with the problem of a vibrating string arbitrarily displaced, Daniel Bernoulli was led, in about 1753, to the belief that its solution could be expressed in the form of a trigonometric series. Euler, D'Alembert, and Lagrange made use of such series, but failed to determine the coefficients by means of definite integrals. This was done by Fourier in 1807 in a memoir presented to the French Academy. His treatment of trigonometric series, including the important fact that the function so represented need not be continuous, may be found in his Théorie analytique de la Chaleur which appeared in 1822, and which constitutes the first volume of his works as recently edited by Darboux. Although such series came into general use, the question of their convergence was not definitely settled until 1829, when Dirichlet pointed out the conditions under which convergence would be assured.*

*See Byerly, An Elementary Treatise on Fourier's Series and Spherical, Cylindrical, and Ellipsoidal Harmonics (1893), pp. 61, 268, 269. Fourier, Œuvres, Vol. I, *Avant-Propos* and p. 208, note.

Blank page retained for pagination

APPENDIX NO. 9—1897.

MANUAL OF TIDES.

PART II.

TIDAL OBSERVATION, EQUILIBRIUM THEORY, AND THE HARMONIC ANALYSIS.

By ROLLIN A. HARRIS.

Submitted for publication November 15, 1897.

Blank page retained for pagination

PREFACE TO PART II.

The object of Part II is to give a sufficient amount of instruction for enabling a person to make reliable observations upon the tides and to reduce them by the harmonic analysis.

The system of analysis is that given by Darwin in his report to the British Association for the Advancement of Science at its Southport meeting (1883). The mathematical developments are chiefly those embraced in his report, and its notation has been generally followed.

The tables appended to this part have been so numbered as to form a continuation of those appended to Part III, Appendix No. 7, Report for 1894.

I have to acknowledge the assistance received from members of the Tidal Division, in the way of suggestions, computations, and the preparation of tables.

Blank page retained for pagination

CONTENTS OF PART II.

CHAPTER I.

OBSERVATION OF TIDES.

	Page.
Selection of sites for tidal stations	477
Staff gauges or tide staves	477
Box gauges	478
Other non-self-registering gauges	479
Automatic or self-registering tide gauges	480
Attachments or additions to tide gauges, including indicators	482
Establishment and care of a self-registering tide gauge	484
True scale of the gauge or marigraph	486
Additional directions to the observer	488
Preparation of the marigram for reduction	489

CHAPTER II.

ASTRONOMY; TIDAL COMPONENTS SUGGESTED; ETC.

Mean motions of the moon, sun, equinox, etc	490
Principle of forced oscillations	491
What components, or periodic oscillations, should exist in the tide	491
Rules for inferring certain nonharmonic quantities	496
Mean longitude of moon, sun, lunar perigee, etc	497
Formulæ for computing I, ν, and ξ	498
Kepler's problem	499
Reduction to the equator, and conversely	500
Approximate expression for the right ascension of the sun and moon	500
Astres fictifs, fictitious moons, etc	502
Sum of a cosine series	503
Note on the determination of empirical constants	503

CHAPTER III.

THE TIDE-PRODUCING POTENTIAL.

Its derivation and value	505
An approximate determination obtained by introducing moon and anti-moon	507
An approximate determination from Proctor's construction	508
Spherical harmonic expression of this potential	509
Spherical harmonic deformations consistent with the condition of continuity	510
Effect of mutual attraction between the fluid particles	514

CHAPTER IV.

DEVELOPMENT OF THE TIDE-PRODUCING POTENTIAL.

The problem stated	517
Spherical harmonic expressions of the potential	518
Development of these expressions into series of periodic terms	519
Approximations adopted	521
Special treatment for L_2 and M_1	522
The evection and variation	523
The equilibrium height of tide	525

Page
The solar tides 526
Tides depending on the fourth power of the moon's parallax 527
On the mean values of the coefficients 528
The factor f 529
Special treatment for the luni-solar tides K_1, K_2 530
Meteorological and shallow-water components 532
The corrected equilibrium theory 534

CHAPTER V.

THE HARMONIC ANALYSIS OF TIDAL OBSERVATIONS.

Comparison between component and solar hours 537
Stencils, their construction and use in making summations 539
Adding machines 540
The Thomson harmonic analyzer 541
Augmenting factors 543
The process of making the analysis 544
Ferrel's method of eliminating the effects of components 545
The effect of a short-period component upon daily mean sea level 548
Example showing the application of the harmonic analysis 549
Formulæ for inferring amplitudes and epochs 554
On the abbreviation of summations 557
On the harmonic analysis of tides of long period 558
To reproduce the quantities harmonically analyzed 565
Harmonic analysis of a series two weeks in extent 566
Harmonic analysis of high and low waters 567
Interpolation of hourly heights 572
Remarks upon published results and tables 573
Harmonic analysis of tidal currents 573
Prediction of currents 574
Remark on the notation 575

TABLES.

36. Shallow-water components 579
37. The theoretical amplitudes of some of the more important components for every five degrees of latitude 582
38. Augmenting factors 583
39. Values of $b-a$ and of $24\,(b-a)$ 584
40. Synodic periods in days and hours 586
41. For clearing one component of the effect of others 587
42. Component hours derived from solar hours 589
43. For the summation of long-period tides 604
44. Acceleration in HW and LW of a semidiurnal wave due to a diurnal wave 610
45. Height of HW and LW for a tide composed of a diurnal and a semidiurnal wave 612
46. Hyperbolic functions 614
47. Period of a wave 616
48. Wave velocity 617
49. Ratio of vertical to horizontal axes of elliptic orbits of water particles 617
50. Propagation of a free tide wave along a uniform channel 618

APPENDIX NO. 9—1897.

MANUAL OF TIDES—PART II. TIDAL OBSERVATION, EQUILIBRIUM THEORY, AND HARMONIC ANALYSIS.

By ROLLIN A. HARRIS.

CHAPTER I.

OBSERVATION OF TIDES.

1. *Selection of sites for tidal stations.*

The selection of a site for the observation of tides depends upon the object in view. If a knowledge of the tides at a given point is required, then there is little or no choice in the matter; if, on the other hand, and this is usually the case, a station is to be selected which shall tolerably well represent a considerable area, the following desiderata may govern the selection: Ready communication with the sea, deep water at low tides, shelter from storms, freedom from freshets, and non-proximity to the head of a bay or tidal river. At stations located along straits or upon islands, the tide is liable to be peculiar and so not representative for any considerable region.

Freshets may cause great irregularities in the tide, particularly in mean water level.* Near the head of a bay various shallow-water phenomena may occur;† also seiches in the lesser bays or coves.‡ Far up a tidal river the duration of rise may be several times less than the duration of fall; and the range of tide may be nearly obliterated.§ A wave cannot be propagated through a very narrow strait into a large body of water without losing its original form and altering its amplitude. For, there is no cause at work which will impart to the particles of water sufficient velocity for supplying or taking away the volume of water necessary to maintain the wave form unchanged.‖ Waves coming around an island from different directions generally produce some kind of interference in certain localities.¶

Where the water is deep, it is not likely that the type of tide change rapidly from point to point, although the shore may be cut up by bays, canals, and straits.**

The selection of stations for the prediction of tides may be governed by considerations like the above.

2. *Staff gauges or tide staves.*

A *tide staff* (*tide pole*) is a graduated rod, usually made of wood, but sometimes of metal. It is essential to any series of tidal observations, whether the tides are observed directly upon it or not. It should be carefully divided into feet and tenths, by aid of a steel tape or otherwise, and fixed in a truly vertical position to some object affording a steady and permanent support; for example, to a solid wall or pile. Its zero should be set below the lowest low water likely to occur, and its length should be more than sufficient for measuring the height of the highest tides known at the station.†† Where the beach slopes very gently, or where there are great changes in

* E. g., the lower Mississippi; the Delaware.

† E. g., at Providence, R. I., there are double-headed tides. At the heads of the arms Petit-Coudiac and Avon, Bay of Fundy, bores sometimes occur.

‡ E. g., Bristol, R. I.; Karwar and Beypore, India.

§ E. g., Rivers Adour, Dordogne, Garonne, Charente, Loire, and Seine, of France; also Cape Fear River, North Carolina.

‖ E. g., Strait of Gibraltar; the East River, New York.

¶ E. g., east of Ireland, and Nantucket Island, Massachusetts.

** E. g., southern portion of Alaska.

†† Sometimes the graduations increase downward, the zero being a fixed point above the surface of the water; e. g., Airy, Phil. Trans., 1842, p. 1.

level, as in rivers, several staves may be required for obtaining all readings. They should, of course, be so set, by means of levels, as to virtually constitute a single staff. If made of wood, the staff should be an inch or more in thickness and four or more in width—say not less than $\frac{1}{20}$ part of its length. To prevent the staff from becoming coated and hard to read, it is sometimes well to provide a ready means of removing the same from its support when not in actual use. This is easily done by leaving such small projections and definite marks upon the support as will enable one to readily return the staff to the same position whenever it is to be read. Metal staves, coated with porcelain, are more durable than those made of wood, and do not require removing from their supports when not in use.

Bench marks.—In order to detect any settling or rising in the support of a tide staff, and to enable a person to recover the plane of reference at any future time, several tidal bench marks of a permanent character and situated at various distances from the staff should be established. These marks usually consist of the bottoms of holes drilled into rocks; projections or markings upon rocks or walls; a certain portion of a step, door, or window sill: in the absence of such objects, a buried stone, or a deeply driven stake, pile, or iron pipe may be used. All bench marks should be carefully described (usually by aid of diagrams) for identification. The zero of the staff should be referred to the bench marks by sets of levels run from time to time while tidal observations are in progress. Ordinarily the levels should be reliable to about $\frac{1}{100}$ of a foot.

Tidal bench marks should, whenever feasible, be connected with transcontinental and other long lines of levels. It is particularly desirable to have all tidal stations which are located upon the same body of water accurately connected with one another in order that all heights may eventually be referred to a common datum.

Directions for observing.—The staff and bench marks established, the observer should read the height of the tide at even intervals of time. Readings at the exact hours throughout the twenty-four hours of each day are preferable for most purposes. The kind of time used is immaterial, provided that it be the same throughout the series of observations. It should always be specified in the record. In making such observations it is of importance to know the time to within about one minute. In high and low water observations readings should be made every ten minutes, say, for about forty minutes before to forty minutes after each of the four tides of the day. For tides of large range, less than forty minutes will suffice, while for tides of small range more time will be required.

In reading a height upon the staff, unless the surface of the water be perfectly smooth, note a point midway between the crest and trough of the waves. A glass tube, partially closed at the ends by notched corks, and held alongside the staff, will facilitate making these readings; or glass tubing may be fastened alongside the staff. In either case the opening in the lower end should not be too large. A small floating body will be found serviceable in marking the surface of the water, or a few enclosed drops of colored oil may be dropped into the tube.

3. *Box gauges.*

A box gauge consists of a long vertical box inclosing a float which rises and falls with the tide. By this arrangement observations may be made when the sea is comparatively rough. The bottom of this box may be pointed or funnel-shaped or, for ease of construction, simply slanted, with a small opening at the lowest part, in order to prevent the accumulation of mud or sand. Besides this, other openings should be made near the lower end of the box. These should be provided with slides for closing such a number of them as will give steady motion to the float without causing the level of the confined column of water to differ sensibly from the mean level of the water surface on the outside. The area of the holes left open should usually be between $\frac{1}{200}$ and $\frac{1}{100}$ of the cross-section of the float box, and the lower end of the box should be several feet below the lowest low water. Of course the farther the box extends below the surface of the water the larger may be the openings, as the amplitudes of wind waves decrease rapidly in going downward. (See Fig. 2, Part I.) In some cases the float carries a vertical rod which may itself be graduated,* or it may simply point to graduations upon a fixed scale;† in other cases the float is attached to a wire or varnished cord which passes over one or more pulleys, moves an index

* United States Coast Survey Reports, 1854, pp. 190, 191; and 1876, p. 131.

† Baird's Manual for Tidal Observations, p. 5. Phil. Trans., 1893, pp. 55, 56.

along a graduated scale,* or rotates a drum carrying a pointer,† and terminates in a counterpoise; in still other cases the cord is replaced by a flexible tape upon which graduations are made.‡ Various combinations and modifications of these styles readily suggest themselves.§

A simple staff gauge should always be located near a box gauge, and the readings of the two should be frequently compared: for, it is obvious that the line of flotation may in time become altered; or the access of water may be clogged by sand or marine growths, so that the box gauge does not give the true range of tide. In such gauges as have a graduated vertical rod or tape attached to the float, the *reading* point—i. e., the point of the float box opposite which the movable graduated rod or tape is read—should be referred to a bench mark on the shore. The vertical distance of the line of flotation from the zero of the rod or tape should be ascertained and given in the description of the gauge. When the graduations are upon a fixed vertical rod or the float box itself, one of these graduations should be referred to bench mark. The distance of the movable pointer above the line of flotation should be given. The obvious rule covering all cases, even when the graduations are upon a horizontal or oblique scale, is: *Measure the vertical distance from the bench mark to the water, at the same instant noting the reading of the gauge.* The difference between the two values should remain constant. Such reference will detect variations in the working of the gauge, and enable one to recover the plane of reference determined from the series of observations, if such plane should be required in the future.

4. *Other non-self-registering gauges.*

A *siphon gauge* consists of a box gauge upon the shore communicating with the off-shore water by means of a pipe laid along the bottom forming a siphon.‖ While observations are in progress, care must be taken that all air in the highest part of the siphon be frequently expelled; otherwise the flow in the pipe will be decreased. This may be accomplished by there inserting a stopcock to be opened at high water or whenever the surface of the water is above it. A closed standpipe or other vessel, preferably of glass, attached to the highest point and filled with water, will serve as a reservoir for the accumulated air. The advantage of this arrangement is that it needs filling with water only occasionally, because the accumulated air does not then immediately decrease the cross-section of the pipe.¶

A *pressure gauge*** is an instrument, somewhat analogous to a barometer, for measuring the pressure of the water at the bottom of a harbor, in order to ascertain the depths of water and so the height of the tide. The pressure, when the depths are not too great, may be exerted upon a bag filled with air which communicates by means of a hose with a manometer located on board a vessel or on the shore. Such gauges have heretofore generally proved unsatisfactory for long-continued records, owing to the difficulty of preventing sand or shellfish from increasing the normal pressure of the water.††

Thomson's depth recorder, which indicates depths by the compression of air, can be used for measuring the tides in very deep water.

A *spar gauge*‡‡ consists of a long spar bolted at the foot with a universal joint to a block or stone, having attached to the portion above the surface of the water an arc of a circle over which passes a plummet line which indicates the inclination of the spar to the vertical. The graduations upon the spar and this angle of inclination give, by aid of a table of sines, the depth of the water at any time. This gauge may be used for off-shore observations and where the current is strong. Owing to changes which are likely to occur in the sea bottom, the readings of this gauge should be frequently referred to a bench mark upon the shore.

---

*United States Coast and Geodetic Survey Bulletin No. 12 (1889), p. 143.

†Zeitschrift für Instrumentenkunde, Vol. IV (1884), p. 439.

‡United States Coast Survey Report, 1857, pp. 402, 403; 1876, p. 131.

§Phil. Trans., 1831, pp. 174, 175. United States Coast Survey Report, 1876, p. 131.

‖United States Coast and Geodetic Survey Bulletin No. 12 (1889), pp. 143-146. Baird's Manual for Tidal Observations, pp. 3–6.

¶Cf. Church, Mechanics of Engineering, p. 736; Trautwine, The Civil Engineer's Pocket-Book, 16th. ed., Art. "Syphon"; Knight, American Mechanical Dictionary, Art., "Siphon."

**United States Coast Survey Report, 1858, pp. 247, 248. This gauge as used at Boston was supplied with glycerine instead of air; it was connected with a self-registering apparatus. See an article entitled "Description of a tide gauge for cold climates," by John M. Batchelder, Am. Jour. Sci. and Arts, Vol. 2 (1871), pp. 67, 68.

††Thomson, Popular Lectures and Addresses, Vol. III, p. 54.

‡‡United States Coast Survey Report, 1857, pp. 403, 404.

A *tripod or pulley gauge*, sometimes used where observations are made upon ice rising and falling with the tide, has a flexible cord made fast to an anchor on the bottom, and which, passing over a pulley directly above, terminates in a counterpoise. The heights may be indicated by the movement of the counterpoise over a graduated scale; or by the number of revolutions of the pulley*, or by a graduated scale securely fastened to the vertical portion of the rope.

AUTOMATIC OR SELF-REGISTERING TIDE GAUGES.

5. The object of these gauges is to trace a curve, or leave some other record, which will enable one to readily find the height of the sea corresponding to any given instant of time covered by the period of observation.

Many forms have been proposed or constructed from time to time; most of them, however, more or less resemble the one described by Henry R. Palmer in 1831,† which is probably the first self-registering tide gauge ever constructed. The essential parts of any form may be said to be, (1) a float and box similar to those employed in a box gauge, (2) a time piece, and (3) some means of recording the height, either in a continuous manner or at short discrete intervals of time.

Usually the motion of the float as it rises and falls with the tide is communicated to the recording portion of the gauge by means of a flexible cord which passes over a grooved wheel called a *float wheel.*‡ Thence the motion is transferred, but usually on a reduced scale, through some mechanism depending upon the particular kind of gauge, to a pencil which traces a curve upon a moving sheet of paper. The paper is driven or carried along by means of a cylinder connected with a well-regulated clock. The pencil is free to move in a direction perpendicular to the line of motion of the paper. In some gauges the paper used is in the form of a long band, and usually of sufficient length for containing a month's record; it is paid out from one cylinder, passes over a second upon which the tracing pencil rests, and is received upon a third. In others there is but one cylinder and this usually revolves once in twenty-four hours. For gauges of this kind, the sheet of paper is first dampened with a wet sponge or cloth, then wrapped about the cylinder and its edge pasted down; when dry it will so hug the roller as not to slip. In some cases it is made fast with rubber bands. One or several days' record are made upon each sheet; but care must be taken to change the sheet before the record becomes confused by many tracings.

In order to keep the float cord and the bands of paper taut, it is necessary to have some arrangement for counterpoising; either weights or springs may be used for this purpose.§

---

* Smithsonian Contributions to Knowledge, Vol. 13 (1863), pp. 1, 2.

† Phil. Trans., 1831, pp. 209–213.

‡ The word "cord" may be used as a general term including wire, tape, chain, etc. In many forms of gauge a rack-and-pinion takes the place of cord and float wheel.

§ For description of several self-registering gauges, the following references may be consulted:

"Description of the self-registering tide-gauge arranged for the Coast Survey," by Joseph Saxton; United States Coast Survey Report, 1853, pp. 94–96.

"Methods of registering tidal observations," by R. S. Avery; ibid., 1876, pp. 130–142.

"The self-registering tide-gauge;" Baird's Manual for Tidal Observations, pp. 10–14.

(Thomson's gauge); Minutes of Proceedings of the Institution of Civil Engineers (London), Vol. 65 (1881), pp. 2–10.

"Notes relating to self-registering tide-gauges as used by the United States Coast and Geodetic Survey," by J. F. Pratt; Report, 1897, App. No. 7.

"Ueber einen elektrisch registrirenden Fluthmesser der Telegraphen-Bauanstalt von Siemens & Halske"; Zeitschrift für Instrumentenkunde, Vol. IV (1884), pp. 95–99.

"Registrirender Fluthmesser" (F. R. Reitz's); ibid., Vol. V (1885), pp. 165-168.

"Ueber Fluthmesser," by Prof. Eugen Gelcich; ibid., Vol. VI (1886), pp. 86–89.

"Der selbstregistrirende Pegel zu Travenmünde," by Prof. W. Seibt; ibid., Vol. VII (1887), pp. 7–14.

"Der selbstregistrirende Fluthmesser von R. Fuess;" ibid., Vol. VII (1887), pp. 243–246; Engineering News, July 28, 1888.

"Der selbthätige Universalpegel zu Swinemünde, System Seibt-Fuess;" ibid., Vol. XI (1891), pp. 351–365; also ibid., Vol. XIV (1894), pp. 41–45; ibid., Vol. XV (1895), pp. 193–203.

"Neuer Mareograph," by L. Fauć; ibid., Vol. XII (1892), pp. 171, 172. This is a self registering pressure gauge described in the Journal de Physique, II, Vol. 10, p. 404.

Other references may be found in the index of Zeitschrift für Instrumentenkunde under the heads "Wasserstandsanzeiger," "Fluthmesser," and "Pegel."

It may be added that several designs for new tide gauges, also for attachments and improvements to older forms, are on file at the office of this Survey.

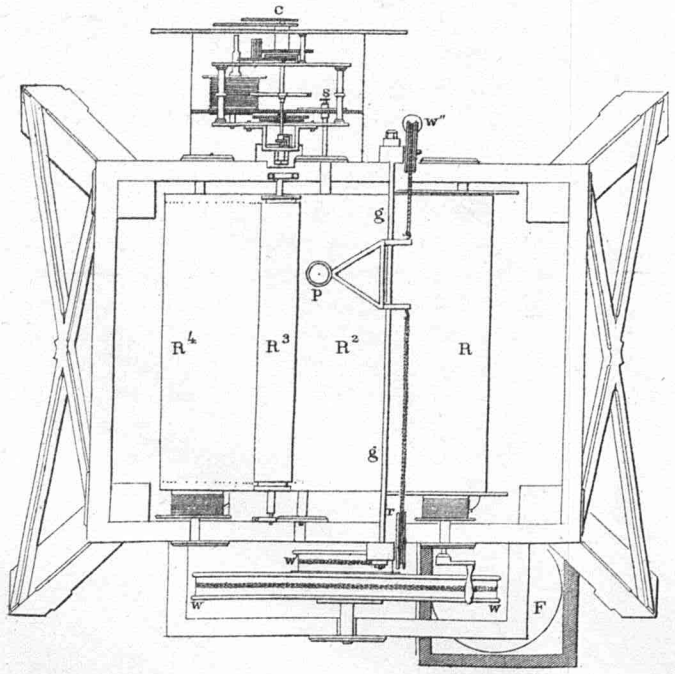

Horizontal Plan

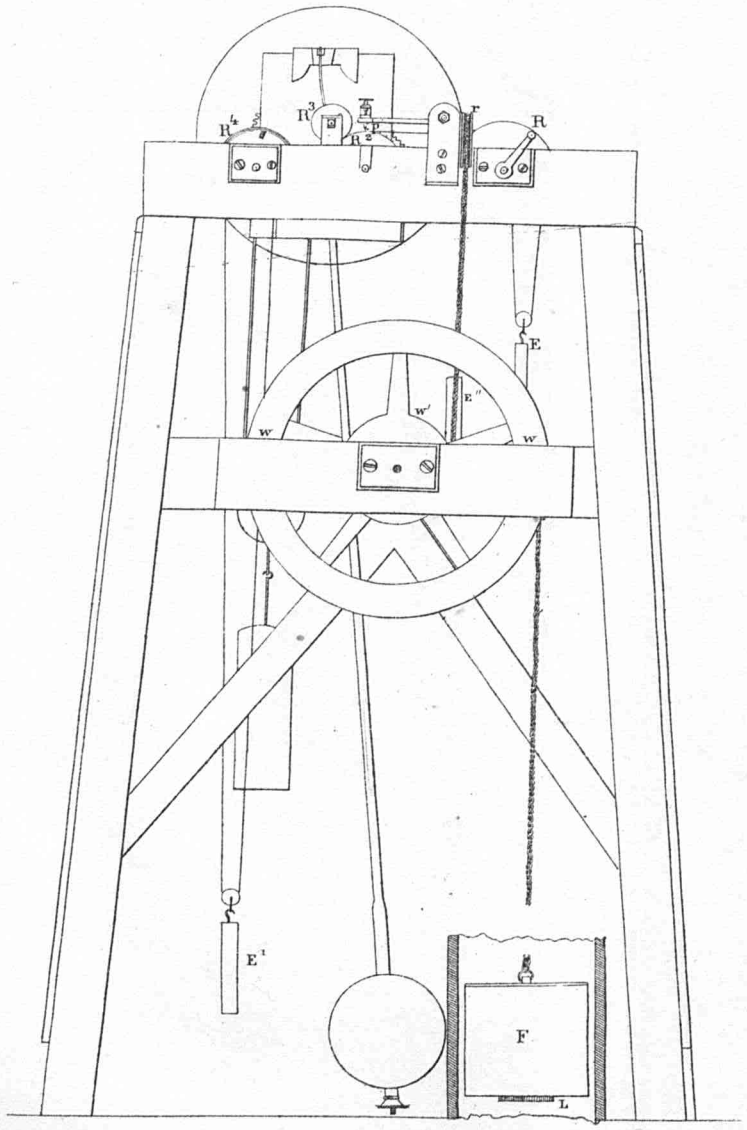

Rear Elevation

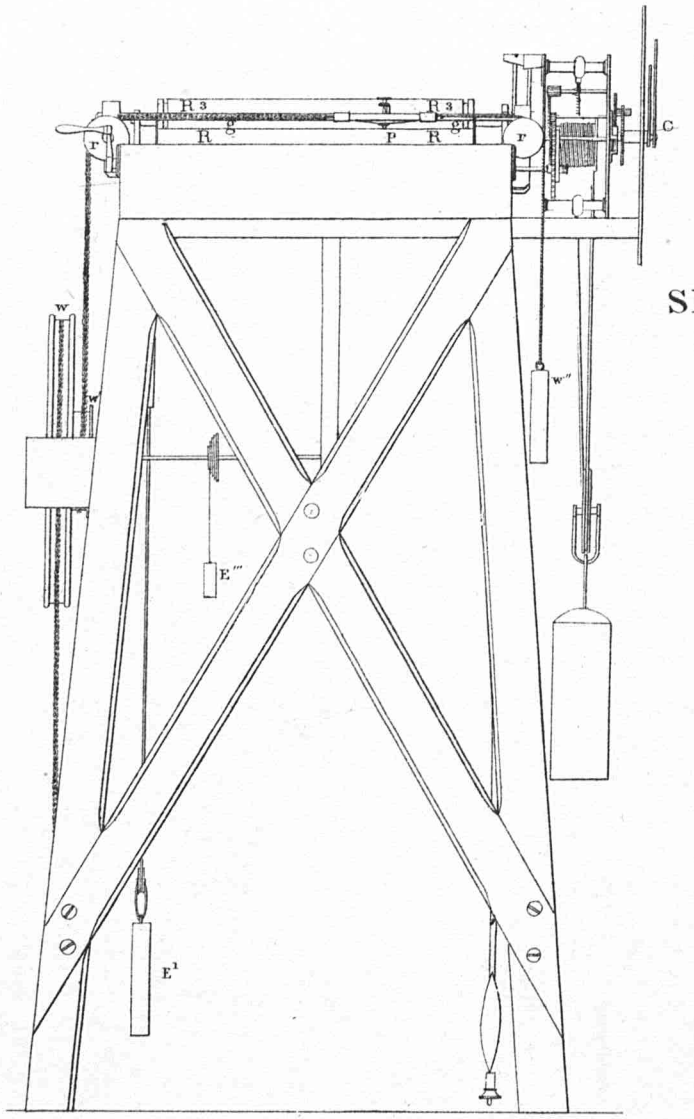

Side Elevation

DRAWING OF THE SELF-REGISTERING TIDE GAUGE

DEVISED BY

JOSEPH SAXTON

For the use of the U. S. Coast Survey

Scale 1½ inches to 1 foot

1853

Drᵍᵗ by W. Luce.

THE NORRIS PETERS CO., LITHO., WASHINGTON, D. C.

Engᵍ by H. M. Knight & App. H. C. Evens

6. Fig. 1, taken from the Coast Survey Report for 1853, shows a three-roller gauge designed by Joseph Saxton.

F denotes the float, W the float wheel, P the tracing pencil, and C the clock. The paper is paid out from the roller R, is pulled forward by means of pin points in the cylinder R^2 which is driven by the clock, passes under R^3 which pressing down upon it enables the points to puncture the sheet, and is finally received upon R^4. E, E′, E″, E‴ denote various counterpoises.

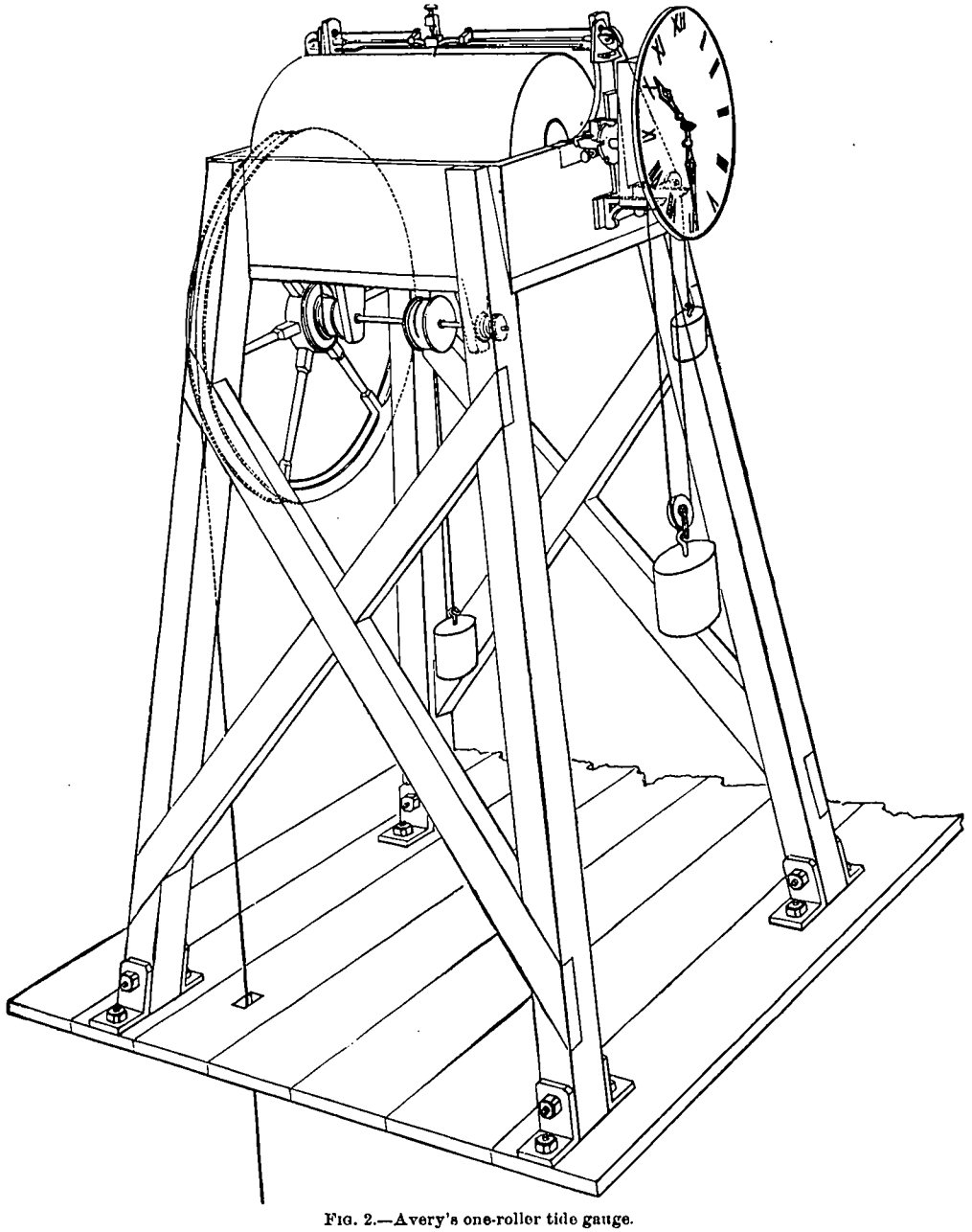

FIG. 2.—Avery's one-roller tide gauge.

This gauge was used by the Survey for many years, the most important change made being the substitution by R. S. Avery of a balance clock for a pendulum clock. This change was necessitated because of the shocks of the waves against the supports of the tide house when in an exposed location.

Several other improvements were made by Avery. One was the putting of band wheels at

the ends of R, R^2, R^4, so that R and R^4 could be moved by R^2 by means of an endless band. This necessitated some means for keeping the paper taut and at the proper tension, which was accomplished by allowing the cores of R and R^4 to revolve with some friction in their cylinders. The friction was produced by friction plates which could be adjusted at will. Another improvement was in the mode of clamping the clock to the cylinder.

Fig. 2 shows a one-roller gauge devised by Avery and described in the Coast Survey Report for 1876.

7. Figs. 3 and 4 show a form of gauge now constructed in the Instrument Division of the Survey.

This is a three-roller gauge capable of receiving one month's record without change of paper. The float wheel has a spiral groove in its periphery so that the float wire, having been made fast at a given point, may be wound around it a number of times without causing any crossing or piling up. A shoulder of the float wheel has a similar spiral groove for the wire or cord of the float counterpoise. The float wheel communicates motion to the recording pencil by means of a coarse screw working in a nut. The float-wheel end of the screw rests upon ball bearings; this secures accuracy as well as ease of working. The recording pencil can be accurately set at any distance from the base line by loosening the float wheel from the coarse screw and rotating the latter, thus driving the nut and pencil.

An attachment is provided for marking the exact hours upon the sheet. This result is accomplished by making use of an additional clock, and adapting its striking apparatus to the sudden movement of the recording pencil each hour.

The paper is kept taut by means of a spring pressing against the roller from which the paper is paid out, and a weight attached to the receiving roller. The distance between the flanges of the rollers, that is, the width of the sheet, is thirteen inches.

8. For special purposes many attachments or additions have been devised. Of these may be mentioned *integrators*, *indicators*, *time-marking* and *printing attachments*. In the more recent gauges, electricity often plays an important part.

An integrator is an arrangement for continuously summing the heights of the sea for the purpose of finding mean sea level. One form of integrator may be described thus:* The cylinder upon which the curve is traced has attached to one end of its axle a smooth disk. A small friction wheel with sharp edge has its plane perpendicular to the plane of the disk, and its axis in the same plane as the axis of the cylinder. This small wheel moves across the face of the disk as the recording pencil moves across the recording sheet. The friction between this disk and the small wheel causes the latter to rotate. When the phase of the tide is at about mean sea level, the edge of the wheel should be set at the center of the disk; then for phases higher than this, it will rotate in one direction; and for lower phases, in the opposite direction. The resulting number of rotations is ascertained by additional wheelwork. This number divided by a quantity proportional to the length of the period covered by the observations, will show how much the observed mean sea level differs from the one assumed.

Another form of integrator† consists essentially of a pendulum whose variable length is dependent upon the height of the sea for the particular instant. A cam connected with the float wheel alters this length in a suitable manner, while a clockwork registers the entire number of beats.

An indicator is either an independent instrument or an attachment to a tide gauge, which shows upon a large dial, or otherwise, the height of the sea at any given instant. The indicator may stand close to the float box and have a mechanical connection therewith; or, it may be located many miles distant and have an electric connection. A broad and clearly-painted tide staff, situated in a conspicuous place, constitutes an indicator of the simplest form.‡

* "Registrirender Fluthmesser" (F. R. Reitz's) Zeitschrift für Instrumentenkunde, Vol. V (1885), pp. 165–168.

† "Der selbthätige Universalpegel zu Swinemünde, System Seibt-Fuess;" Zeitschrift für Instrumentenkunde, Vol. XI (1891), pp. 351–365.

‡ For descriptions and examples of indicators the following references may be consulted:

"The tide indicator at Rouen;" Scientific American Supplement, September 23 (1893), p. 14785.

"Tidal indicator, New York Harbor;" Scientific American, March 3 (1894), p. 133. Coast and Geodetic Survey,

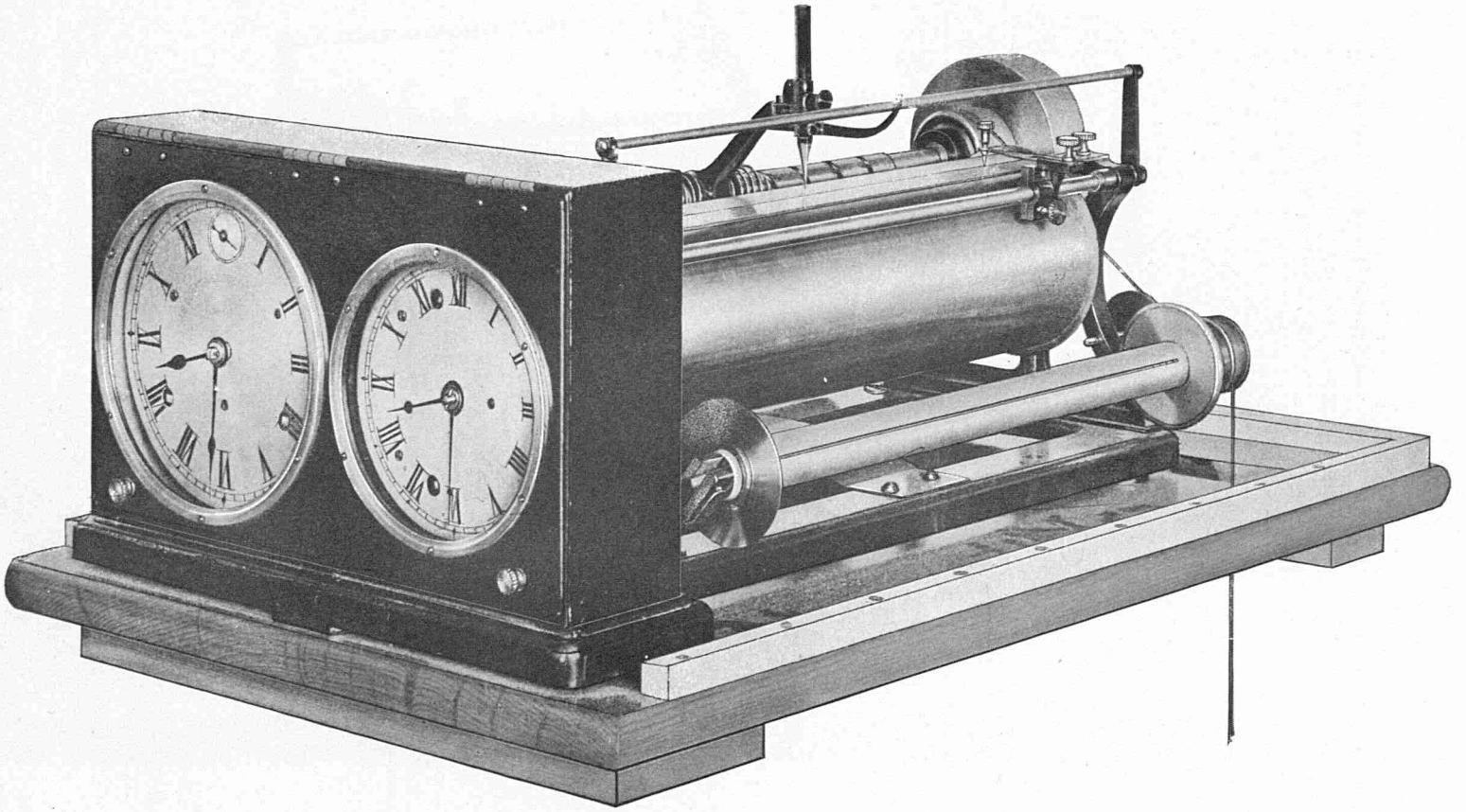

STIERLE GAUGE AS MODIFIED BY THE COAST AND GEODETIC SURVEY.

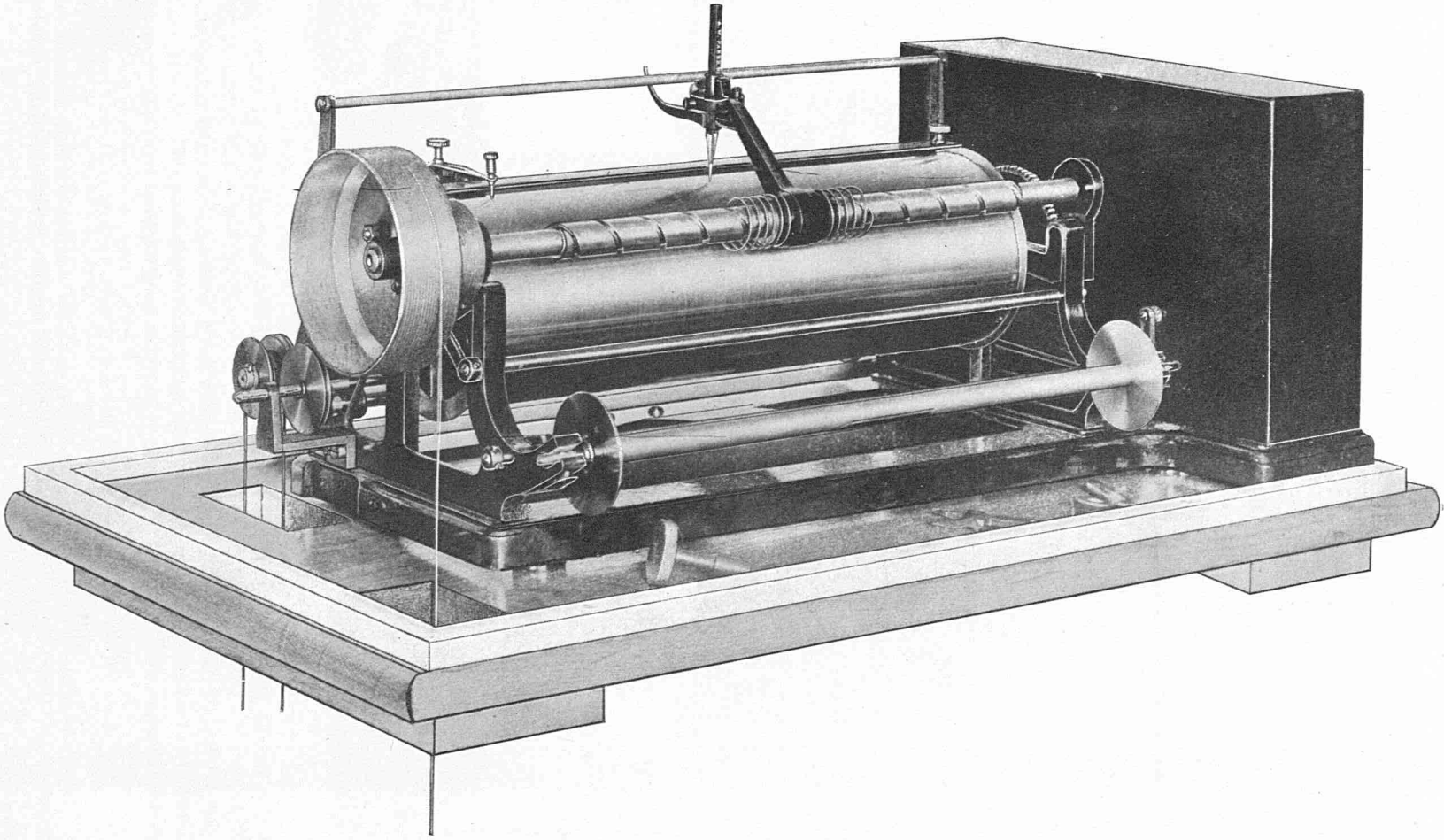

STIERLE GAUGE AS MODIFIED BY THE COAST AND GEODETIC SURVEY.

The Coast and Geodetic Survey has recently erected two tidal indicators, one at Fort Hamilton, N. Y., and one at Reedy Island, Delaware River. The latter, shown in Fig. 5, has a face thirty feet in diameter. It is proposed to erect a similar indicator at Presidio, Cal.

In these indicators the rise and fall of the tide is communicated to a large float wheel carrying a pointer, by means of a flexible wire cord. The float wheel is so counterpoised as to keep this cord constantly taut. The end of the pointer moves along a semicircle whose divisions represent feet and half feet of rise and fall, the zero denoting the position of the pointer when the tide is at the plane of mean low water. The arrow head has its two barbs so hinged as to enable it to point either upward or downward. The upward pointing indicates a rising tide, the downward, a falling.

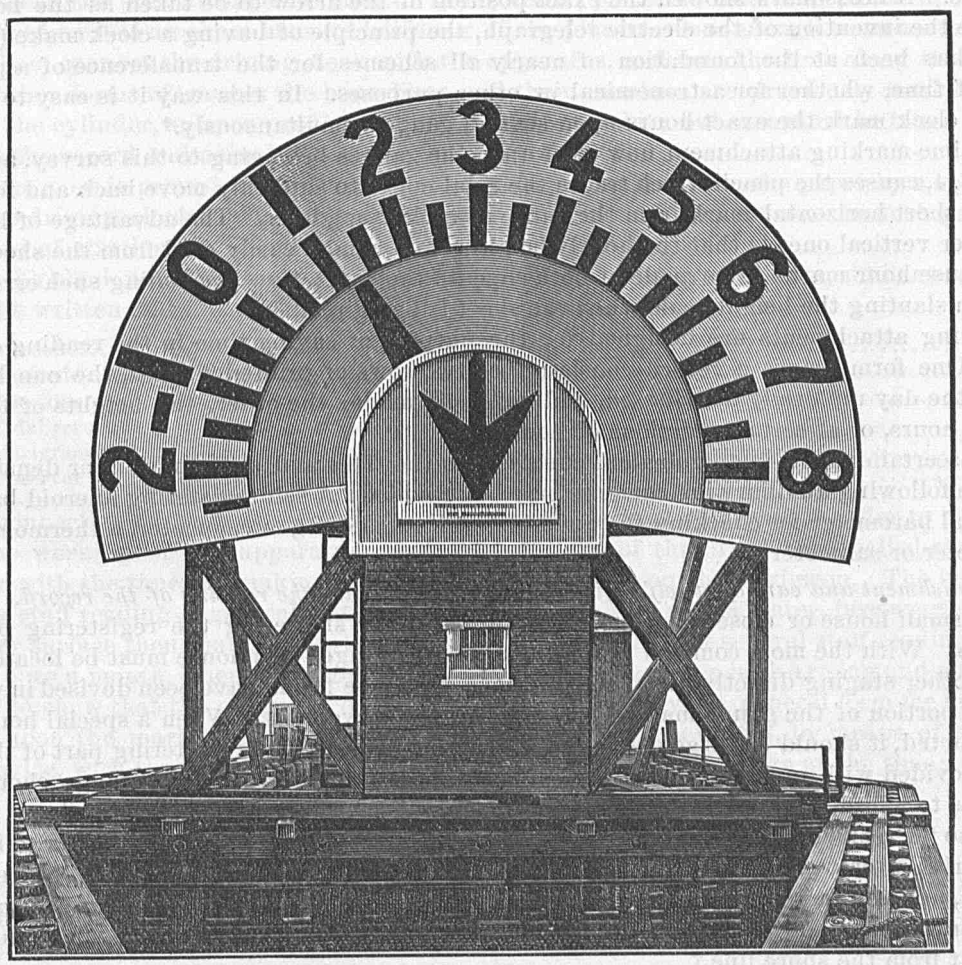

FIG. 5.—Tidal indicator, Delaware River, Delaware.

At the time shown in the figure, the tide is $1\frac{1}{4}$ feet above mean low water and is still falling, as indicated by pointing of the arrow.

Each triangular barb of the arrow head rotates about a point near its obtuse angle when a reversal takes place. The power accomplishing this comes from the float and is communicated to a lever by causing the float cord to pass between a group of three pulleys, thus giving rise to some

"Notice to mariners" No. 177. Harpers Weekly, Vol. 38 (1894), p. 96. United States Coast and Geodetic Survey Report (1893), pp. 27, 28.

A similar indicator is located at Reedy Island, near Philadelphia. "Notice to mariners" No. 202.

"Elektrischer Tiefwasserstandsmesser mit Zifferblatt" (A. Grabié's); Zeitschrift für Instrumentenkunde, Vol. IV (1884), p. 439.

"Elektrischer Wasserstandsanzeiger" (A. Hempel's); ibid., Vol. VIII (1888), p. 224.

"Elektrischer Wasserstandsanzeiger mit Registrirvorrichtung," by W. E. Fein; ibid., Vol. IX (1889), pp. 338–343.

"Der selbthätige Universalpegel zu Swinemünde, System Seibt-Fuess;" ibid., Vol. XI (1891), pp. 351–365.

small amount of friction. The lever actuates a vertical rod in the shaft of the arrow, so to speak, and this in turn actuates an arm or projection attached to each barb. From the figure it is evident that the barbs are of sufficient size to require counterpoising in order that as little work as possible may be required of the float.

The object of time-marking attachments is to indicate upon the record sheet the exact hour as given by a clock, either near or distant, in order to avoid errors which might result from using hour marks made by points fixed upon the cylinder. The gauge of Mr. Palmer, already referred to, marked the positions of the hours by means of a punch actuated by a toothed wheel. The figure was in the form of an arrow whose direction was always that of the wind-vane above the tide house. A cross-mark showed the exact position of the arrow to be taken as the hour mark.

Since the invention of the electric telegraph, the principle of having a clock make (or break) a circuit has been at the foundation of nearly all schemes for the transference of a particular instant of time, whether for astronomical or other purposes. In this way it is easy to have one standard clock mark the exact hours upon several gauges simultaneously.*

The time-marking attachment now used upon the gauges belonging to this survey, and shown in Figs. 3, 4, causes the pencil which traces the tidal curve to suddenly move back and forth, thus dawing a short horizontal mark from the curve at each exact hour. The advantage of horizontal marks over vertical ones is that the hourly heights can be more easily read from the sheet. Some gauges cause hour marks to be made at both edges of the sheet, thus precluding such error as may arise from slanting the height scale when the sheet is being read.

Printing attachments are designed for the purpose of saving time in the reading of a tidal record. One form leaves a record consisting of two rows of printed figures, the one being the hours of the day uniformly distributed, and so easily made; the other, the heights of the sea at the exact hours, or at certain fractions of hours.†

For ascertaining the meteorological effects upon the tides and the condition or density of the water, the following auxiliary instruments may be provided: A self-registering aneroid barometer, a mercurial barometer for checking the aneroid, a self-registering anemometer, a thermometer, and a densimeter or salimeter.

Establishment and care of a self-registering tide gauge; also the reading of the record.

9. A small house or closed shed must be provided for sheltering the registering portion of the gauge. With the most common forms of automatic gauges this house must be located upon a wharf or other staging directly over the float box; but some forms have been devised in which the recording portion of the gauge may be placed wherever convenient. When a special house has to be constructed, it should be large enough to afford room to get at the registering part of the gauge, and be provided with a window for light and ventilation. The site of the gauge should be so selected as to afford as much protection from violent storm waves as possible, while at the same time not so far removed from the port for which the tidal observations are wanted as to introduce any material alteration in the time or range of the tide. The location should be reasonably accessible, and the structure upon which a gauge is placed should be as firm as is practicable. The siphon arrangement already described will be found to be very serviceable where deep water lies far out from the shore line.‡

In setting up the gauge, care must be taken to have it properly leveled in order that all parts may work freely. The float box should be vertical and the float suspended in its center. The statements made in § 3 concerning the size of the openings apply here fairly well. The scale to be used can be decided upon as soon as the range of tide at the place is approximately known.

---

* Some references to time-marking attachments:

"Elektrischer Wasserstandsanzeiger mit Registrirvorrichtung," by W. E. Fein; Zeitschrift für Instrumentenkunde, Vol. IX, (1889), pp. 338-343.

"Der selbthätige Universalpegel zu Swinemünde, System Seibt-Fuess;" ibid., Vol. XI (1891), pp. 351-365.

"Der kurvenzeichnende Kontrolpegel, System Seibt-Fuess," by Wm. Seibt; ibid., Vol. XIV (1894), pp. 41-45.

"Notes relating to self-registering tide gauges as used by the United States Coast and Geodetic Survey," by J. F. Pratt; report (1897), App. No. 7.

† "Ueber einen elektrisch registrirenden Fluthmesser der Telegraphen-Bauanstalt von Siemens & Halske;" loc. cit. ante.

‡ Cf. Baird, Manual for Tidal Observations, pp. 2-4.

The zero of the gauge (i. e., the position of the tracing pencil) can be approximately fixed by noting a reading of the water upon the tide staff. A closer approximation is afterwards made in the manner described beyond.

An automatic tide gauge of any sort is sometimes called a *marigraph*, and the record produced by it a *marigram;* these names can be readily distinguished as to their application by the more common words "telegraph," the instrument, and "telegram," the message sent.

In some forms of marigraphs there is a row of steel pins at each end of a cylinder which make small perforations in the paper, the distance between them indicating hours or half hours of time. After putting the paper on such gauges, and before connecting with the clock, draw a straight line between the pins at opposite ends of the cylinder, place the recording pencil upon this line, and then when it is an exact hour (or half hour, if the pins are close enough to measure that interval of time) connect the driving clock with the apparatus, and note the time along the ruled line.

In other forms of gauges the hour lines and their numbers are previously marked upon the edge of the cylinder, or upon profile paper stretched around it; but care must be taken in starting to make the record and actual time agree.

In the most improved forms of gauge the hours are marked upon the paper by a special clock, or by the driving clock itself, using either electrical or mechanical means. In such gauges there is no need of starting the record at any whole hour or half hour.

On the blank paper, at the beginning and end of each marigram, a note, similar to that below, should be written and filled out:

Station.....
Latitude.....Longitude.....
The time used is.....
Tidal record from.....to.....
Marigram No. .....Marigraph No. .....Scale.....
Observer.....

In connection with every marigraph there should be a fixed tide staff, in order to have a check upon the working of the apparatus; and the readings of this fixed staff, called *staff readings*, together with the times of making them, must be recorded on the marigram. The best time for taking a staff reading is generally at or near the time of high or low water, because the height of the water surface then changes slowly; but it is also desirable that several staff readings be made, at least once a month, when the water is about at its mean level, on both a rising and a falling tide, in order to show that the gauge is working freely and accurately. A general form for making such entries upon the marigram is as follows, the whole being connected, by means of an arrow or other device, with the exact position of the recording pencil of the gauge at the time:

Monday, Dec. 21, 1896, 9^{h} 35^{m} A. M.
Gauge clock correct. Staff 6.34 ft.

Such a note should be made at the beginning and end of each sheet or roll of paper, without regard to the phase of the tide.

When there is a time-marking attachment to the gauge, time comparisons should be made at the instant when the hour mark is made. Then a note like the following may be used:

P. M. Wed., Sept. 25, 1895
Correct time, 1:59
Clock set right
At 2:01, staff reads 6.34.

By clock is here meant the clock which makes the hour marks, and the above note implies that this clock made the 2 o'clock hour mark 1 minute too soon.

If the hour marks are made by means of electric connections with a standard timepiece, no such time comparison is necessary.

Whenever anything unusual happens to the record, such as disturbances caused by great storms, or a stoppage of the gauge, an explanatory statement should be written upon the marigram. In fact, a marigram should be a complete record in itself, as notes made elsewhere are liable to become permanently separated from it.

A graduated piece of paper, wood, metal, glass, or other material, called a height scale, is used for reading the marigram. This scale shows the relation between the marigram and nature; for instance, a scale of one-tenth means that a variation of 10 inches in the height of the water surface is indicated by an inch of change on the record; and with such a scale 1·2 inches on the marigram corresponds to a foot on the fixed staff. Gauges can be made to work upon any desired scale, according to the range of tide at the place; but while it is desirable that the scale used should be as near as possible to nature, the average curve produced ought not to occupy much more than one-half of the paper, for unexpected variations of surface level are sure to occur, and these are oftentimes matters of much interest.

Upon starting the gauge care should be taken to so adjust the pencil that half-tide level will fall as nearly as possible in the middle of the record paper. In order to make scale readings it is necessary to have some datum line upon the marigram; the zero of the scale is often placed upon the line of punctures made in the paper by the row of steel pins for marking time, or preferably upon a line traced by a stationary pencil. When the gauge is first started this datum line may be placed anywhere, and arbitrarily called such a division of the scale as will insure positive readings for the curve, but after sufficient record has been obtained to properly determine the relation between such assumed datum line and the fixed staff, it is desirable to so change the datum as to make the scale and staff readings agree as closely as possible.

In the manufacture of marigraphs it frequently happens that mechanical difficulties prevent the obtaining of the exact scale desired, and hence with a new machine one must always find out from the record itself what its working scale really is.

10. *True scale of a marigraph.*

The true or working scale of the tide gauge is ascertained by comparing the staff readings with the readings of the curve corresponding to these times. The sum of the staff readings near high water, less the sum of a like number of staff readings near low water, gives, when divided by this number, a certain range of observed tide. Treating the corresponding scale readings in the same manner, a certain range of recorded tide is obtained. The ratio of these two ranges shows how much the true or working scale of the tide gauge differs from the assumed scale used in reading the curve. For instance, the sum of the three observed ranges in the fourth column in the example below is 9·7 feet, while the sum of the corresponding scale ranges in the seventh column is 9·9.

$\therefore 9{\cdot}7 \div 9{\cdot}9 = 0{\cdot}980$; and, since the assumed scale is 10, the working scale is $0{\cdot}980 \times 10 = 9{\cdot}80$.

Having thus found that scale heights (by assumed scale of 10) must be multiplied by 0·980 in order to give true heights from base line or scale datum, we multiply 26·5 by it, thus obtaining 26·0 feet. Subtracting 26·0 feet from the corresponding staff heights, we obtain −3·3 feet. Since 6 heights are taken, this must be divided by 6, giving −0·55 feet, which the staff will read when the tracing pencil crosses the base line. Or, if we construct a scale of 9·8, i. e., a scale such that one unit of the scale $= \frac{1}{9{\cdot}8}$ foot, then it should have its division −0·55 marked as the one to be applied to the base line of the marigram in making all height readings.

The following method amounts to giving larger individual ranges greater weights in the determination than is given to the smaller ranges, and so is applicable where the diurnal inequality is large or where a more elaborate determination may be desired. The notation employed is of a temporary nature.

Let "*staff*" be a staff reading taken at or near high or low water.

Let "*scale*" be a reading with the assumed scale at the time of a staff reading. The expression for the scale, true or assumed, as here used, is supposed to be greater than unity; that is, if the record has been reduced ten times, it is called a scale of ten, instead of one-tenth. The assumed scale is supposed to be so taken that the ratio R differs little from unity.

Let A, B, C, D, etc., be successive ranges (HW–LW) on staff.

Let A', B', C', D', etc., be successive ranges (HW–LW) on sheet by assumed scale.

If the staff and scale readings involved no error, we should have

$$R = \frac{A}{A'} = \frac{B}{B'} = \frac{C}{C'} = \frac{D}{D'} = \frac{E}{E'} = \text{etc.}$$

But as an error is likely to occur in each comparison between staff and scale, the precision with which R is determined from the above fractions is in each case proportional to the range. That is, the precisions are as $A:B:C:\ \ldots$, or as $A':B':C':\ \ldots$.

If we weight the determinations according to the precisions, we have, as before,

$$R=\frac{\frac{A}{A'}A'+\frac{B}{B'}B'+\frac{C}{C'}C'+\ \ldots}{A'+B'+C'+\ \ldots}=\frac{A+B+C+\ \ldots}{A'+B'+C'+\ \ldots} \quad . \quad . \qquad (1)$$

In other words,

$$R=\frac{\text{true scale}}{\text{assumed scale}},$$

$$\therefore \text{True scale} = R \times \text{assumed scale.}$$

But it is reasonable to suppose that the weights given to different determinations ought to be proportional to some power of the precision greater than unity; that is, to

$$A'^n,\ B'^n,\ C'^n\ \ldots\ldots,\ \text{where } n>1.$$

From the law of accidental errors, it is seen that

$$n=2;^*$$

therefore, giving to $\frac{A}{A'}, \frac{B}{B'}$, etc., the weights A'^2, B'^2, etc., we have

$$R=\frac{\frac{A}{A'}A'^2+\frac{B}{B'}B'^2+\frac{C}{C'}C'^2+\ \ldots}{A'^2+B'^2+C'^2+\ \ldots}=\frac{AA'+BB'+CC'+\ \ldots}{A'^2+B'^2+C'^2+\ \ldots} \quad . \qquad (2)$$

The reading on staff when the pencil crosses the base line of the sheet is

$$y=\frac{1}{\nu}\left\{[\text{staff}]-R\,[\text{scale}]\right\} \qquad (3)$$

where ν is the number of staff or scale readings and the square brackets denote their sums.

Form for computing the true or working scale of a marigraph.

Date.	Staff.			Scale.				Staff range × scale range.
	H W	L W	Range.	H W	L W	Range.	(Range)².	
1896.	*Feet.*	*Feet.*	*Feet.*	*Feet.*	*Feet.*	*Feet.*	*Feet.*	
Dec. 1	5·0	1·9	3·1	5·6	2·4	3·2	10·24	9·92
2	5·8	2·8	3·0	6·5	3·5	3·0	9·00	9·00
3	5·4	1·8	3·6	6·1	2·4	3·7	13·69	13·32
Sum	16·2	6·5	9·7	18·2	8·3	9·9	32·93	32·24
	6·5			8·3				
	22·7			26·5				

$$R=\frac{32\cdot24}{32\cdot93}=0\cdot979$$

$$\text{True scale} = R \times \text{assumed scale} = R \times 10 = 9\cdot79$$

$$y=\frac{1}{6}\left\{22\cdot7-0\cdot979\times26\cdot5\right\}=-0\cdot53 \text{ feet.}$$

*Merriman, A Text-Book on the Method of Least Squares, p. 41.

That is, if we construct a true scale we must then raise the base line of the sheet by an amount representing 0·53 feet according to true scale, in order that all readings made thereafter may be reduced to staff.

It is to be noted that R should remain the same as long as the same gauge is employed; but the value of y must change and so necessitate a new determination whenever the relation between scale and staff zeros is altered.

The number of observations necessary to make a good determination of the true or working scale and position of the datum line depends upon the value of this scale or ratio of reduction, as well as upon the smoothness of the water, the cross-section of the float used, and the care taken in indicating the exact place on the tide curve which corresponds to the time of reading the staff; as a general rule, however, about thirty high-water and as many low-water comparative readings will suffice. The time and height of these staff readings should be recorded on the marigram, and afterwards copied into a separate register similar to the above form for computation. The scale readings are made by placing the assumed scale so that it corresponds to the arbitrary datum line upon the marigram, and noting where the curve crosses the edge of the scale, care being taken that the place of crossing is exactly at the point marked as being the position of the recording pencil at the instant of making the staff reading, and that the scale is perpendicular to the datum line.

Having thus found the true scale of the record, it is well to have a paper scale constructed for making subsequent readings of the curve. The arbitrary datum line, or the pencil upon the gauge which traces it, should be changed by the value of y, so that the scale readings may agree with the staff readings as nearly as possible. During the progress of the series it frequently happens that the relation between this datum line and the staff is altered by some adjustment of the marigraph, and hence the value of a new y must be computed whenever there is the least suspicion that any alteration has taken place in the relation between scale and staff readings.

If the observer makes any change in the relation he should record the time and amount of such change upon the marigram. It should be made only after he has carefully determined the relation between the datum line and the zero of the tide staff.

11. *Additional directions to the observer.*

In most localities the time may be obtained from railroad or telegraph stations and carried to the gauge by means of a well-regulated watch which has been compared with this standard not many hours before. The kind of time used is unimportant so long as it is defined upon the marigram and maintained for a considerable period, but it is troublesome to have one kind of time at the beginning and another kind at the end of a series. If for any reason it is found desirable to change the kind of time used, it should be done at some convenient epoch, such as the beginning of a calendar year or the beginning of some month, and ample notes should be made upon the record calling attention to such change.

When distant from telegraph stations, a carefully constructed sundial will be of use in setting the watch, for a good sundial will give the time of apparent noon within one minute, which is sufficiently close for any marigraph. Sun time is converted into standard time by adding (Part III, § 27)

$$L - S + \text{equation of time, Table 30.} \qquad (4)$$

The gauge should be visited once or twice every day, especially at about the times of those high and low waters which occur during daylight, so as to make staff readings, time comparisons, and to attend to the various details necessary to keep the gauge running.

In cold weather there is often much annoyance and loss of record caused by the water freezing. At permanent stations a system of pipes passing through the float box and carrying hot water is sometimes provided, thus imparting warmth enough to the confined water to prevent the formation of ice around the float.

In some cases a few gallons of kerosene oil poured into the float box will prevent freezing, but in this case there is a change in the line of flotation which must be allowed for in tabulating the record. Moreover, unless the float box has been constructed with great care to secure tight joints, the oil is sure to soon leak out. If nothing better can be done when the gauge is frozen up, let the observer secure as many readings of the staff as may be practicable, particularly at the

exact hours, for even one or two readings a day will be better than nothing for interpolating the break in the record preparatory to analysis.

12. *Preparation of the marigram for reduction.*

In those forms of gauge without a time-marking attachment it is difficult to secure correct time throughout the different hours of each day, because there is generally some eccentricity in the connection of the driving clock with the axis of the gauge cylinder, thus causing the paper to move irregularly, while the clock may keep correct time. If such a gauge has its axle marked so that whenever connection is made with the driving clock a given hour will always correspond to a fixed portion of the surface of the roller, a scale may be made which will represent quite closely the true length of each hour, no matter how unequal the spaces occupied by them may be. Such scale should be copied upon the marigram.*

If the cylinder is driven at a sensibly uniform rate it is often convenient to subdivide the space between the time notes made by the observer into equal hour spaces. This may be done by first making a paper scale with uniform hour spaces a little longer than the average hour of the marigram, the scale being long enough to reach between successive time notes; and then placing it upon the tide curve, so moving and slanting the scale as to make it exactly agree with two vertical lines drawn through that part of the curve referred to by each of two consecutive time notes. The hours of the time scale, while held in this position, are transferred to the marigram by successive dots, through which vertical lines may be drawn, intersecting the curve at each hour, and subsequently numbered to agree with the notes.

With gauges having steel pins for marking the hours, the perforations in the paper may be used as hour marks, provided the gauge clock is kept always correct and care is taken to start the record exactly on a line joining two steel pins on opposite ends of the roller. As it is practically impossible to maintain correct time without disarranging the relation of the punctures to the clock, and since there is likely to be some eccentricity in the connection between the driving clock and the roller, it will generally be more exact to use one of the methods just described for ascertaining the hours.

When the gauge has a time-marking attachment, it is only necessary to number the marks made by the mechanism.

High and low waters.—It is customary to tabulate the time and height of the high and low waters, but there is often considerable difficulty in fixing upon the proper part of the curve in making these readings. The aim should usually be to select the highest and lowest points of what appears to be the true tidal curve. Some persons select the highest and lowest portions of the curve, regardless of accidental disturbances, as well as of peculiarly shaped high or low waters, but even this latter is likely to introduce considerable irregularity in the times, because the tide curve is generally not symmetrical about its extreme points, and these points are liable to swing back and forth during a lunation. In such cases the usage has sometimes been to imagine a small portion of the curve near high or low waters cut off by a horizontal chord, and to take the point where the perpendicular from the middle of the chord cuts the curve as the point of high or low water.

It is convenient to have a small scale, equal to one hour, subdivided into six parts, so that the number of minutes beyond any hour mark may be easily estimated. The height is read by so placing the scale as to make it agree with the datum line, holding it perpendicular to this line, and noting where the curve at the point selected crosses the edge of the scale.

Hourly heights or ordinates.—It is very important that the height of the sea at each exact hour should be ascertained and recorded. As the marigram has been already subdivided into hours, it is only necessary to see that the scale agrees with the datum line, is perpendicular to that line, and intersects the curve exactly at the hour mark. A form for tabulating hourly heights is given in § 61. A correct datum line upon the marigram, and the relation between staff and scale can be found from the staff readings by aid of § 10. Instead of actually ruling in a new datum line, it is well to mark upon the scale the value by which the assumed datum has been found to differ from the one corresponding to staff; by placing this mark of the scale upon the datum line, the scale readings will then approximately agree with the staff readings.

* Cf. Phil. Trans. 1838, p. 250.

CHAPTER II.

ASTRONOMY; TIDAL COMPONENTS SUGGESTED; ETC.

13. *Mean motions.*

In the harmonic treatment of tides it is important to know the mean sidereal motions of the moon, sun, equinox, lunar perigee, solar perigee, and the moon's node. Upon these depend the periods of the tidal components and tidal inequalities. The values given below are taken from various authorities, as indicated in the right-hand margin.

Mean sidereal motion.

Per Julian year (epoch, Jan. 0, 1900).

Moon	$4812°\cdot6649577 + 0°\cdot0000462\left(\frac{t-1900}{100}\right)$	Hansen, Tables de la Lune, pp. 15, 16, with Newcomb's correction, Researches on the Motion of the Moon, p. 268; or Harkness, Solar Parallax, p. 14, equation (33), omitting term of second power.
Sun	$359°\cdot99373\,11 - 0°\cdot0000001\left(\frac{t-1900}{100}\right)$	Newcomb, Tables of the Sun, p. 9. There denoted by n.
Equinox	$-0°\cdot0139581 - 0°\cdot0000062\left(\frac{t-1900}{100}\right)$ $(50''\cdot2493)\quad(0''\cdot0222)$	Newcomb, Tables of the Sun, p. 9, $\left(n-\frac{dL}{dt}\right)$.
Lunar perigee	$40°\cdot6763487 - 0°\cdot0002070\left(\frac{t-1900}{100}\right)$	Hansen, Tables de la Lune, pp. 15, 16.
Solar perigee	$0°\cdot0032336 + 0°\cdot0000029\left(\frac{t-1900}{100}\right)$ $(11''\cdot6410)\quad(0''\cdot0104)$	Newcomb, Tables of the Sun, p. 9, $\left(n-\frac{dg}{dt}\right)$.
Moon's node	$-19°\cdot3553827 + 0°\cdot0000393\left(\frac{t-1900}{100}\right)$	Hansen, Tables de la Lune, pp. 15, 16, increased by $0''\cdot10$, Newcomb's correction, Researches on the Motion of the Moon, p. 274. [Cf. Harkness, Solar Parallax, pp. 16, 17, 140.]

Mean sidereal motion.

Per mean solar day.

	Temporary symbol.	Numerical value (1900). °
Moon	$\mathfrak{D}_*$	13·176358543
Sun	$\odot_*$	0·985609120
Equinox	Υ_*	— 0·000038215
Lunar perigee	ϖ_*	0·111365773
Solar perigee	π_*	0·000008853
Moon's node	Ω_*	— 0·052992149
Earth's meridian*	$\oplus_*$	360·985609120

Mean motion relative to the equinox, i. e., mean motion in longitude.

	Per mean solar day.		Per mean solar hour.	
	Formula.	Numerical value (1900). °	Numerical value. °	Symbol.
Moon	$\mathfrak{D}_* - \Upsilon_* = \mathfrak{D}\,\varphi$	13·176396758	0·5490165316	σ
Sun	$\odot_* - \Upsilon_* = \odot\,\varphi$	0·985647335	0·0410686390	η
Equinox	$\Upsilon_* - \Upsilon_* =$	0·0	0·0	
Lunar perigee	$\varpi_* - \Upsilon_* = \varpi\,\varphi$	0·111403988	0·0046418328	ϖ
Solar perigee	$\pi_* - \Upsilon_* = \pi\,\varphi$	0·000047068	0·0000019612	
Moon's node	$\Omega_* - \Upsilon_* = \Omega\,\varphi$	— 0·052953934	— 0·0022064139	
Earth's meridian	$\oplus_* - \Upsilon_* = \oplus\,\varphi$	360·985647335	15·0410686390	γ

* I. e., its motion upon the celestial sphere, as seen from the earth's center, $360° = \oplus_* - \odot_*$.

Astronomical periods obtained from mean motions.—If we divide 360° by one of the above sidereal motions, or by a combination of them, the length of some mean astronomical period will be obtained. The following list includes the more important of such periods:

Mean astronomical periods.

Formula.	Name.	Numerical value (1900). d
$360° \div \mathbb{D}_*$	Sidereal month	27·3216609
" $\div \odot_*$	Sidereal year	365·2563605
" $\div [\mathbb{D}_* - \odot_*]$ or $\mathbb{D}\odot$	Synodical month	29·5305881
" $\div [\mathbb{D}_* - \Upsilon_*]$ or $\mathbb{D}\Upsilon$	Tropical month	27·3215816
" $\div [\odot_* - \Upsilon_*]$ or $\odot\Upsilon$	Tropical year	365·2421989
" $\div [\mathbb{D}_* - \varpi_*]$ or $\mathbb{D}\varpi$	Anomalistic month	27·5545503
" $\div [\odot_* - \pi_*]$ or $\odot\pi$	Anomalistic year	365·2596413
" $\div [\mathbb{D}_* - \Omega_*]$ or $\mathbb{D}\Omega$	Nodical month	27·2122191
" $\div [\odot_* - \Omega_*]$ or $\odot\Omega$	Eclipse year	346·6200271
" $\div [\odot_* - \varpi_*]$ or $\odot\varpi$	Evectional period in moon's parallax	411·7846609
" $\div [\mathbb{D}_* - \odot_* - (\odot_* - \varpi_*)]$ or $[\mathbb{D}\odot - \odot\varpi]$	Moon's evectional period	31·8119389
" $\div \oplus_*$	Sidereal day	0·9972696723
" $\div [\oplus_* - \Upsilon_*]$ or $\oplus\Upsilon$	Tropical day*	0·9972695663
" $\div [\oplus_* - \mathbb{D}_*]$ or $\oplus\mathbb{D}$	Lunar day	1·0350501012
" $\div [\oplus_* - \odot_*]$ or $\oplus\odot$	Solar day	1·0
" $\div \Upsilon_*$	Revolution of equinox	9420384·666
" $\div \varpi_*$	Revolution of lunar perigee or line of apsides	3232·591040
" $\div \pi_*$	Revolution of solar perigee or line of apsides	40664181·63
" $\div \Omega_*$	Revolution of moon's node	6793·45916
" $\div [\Omega_* - \Upsilon_*]$ or $\Omega\Upsilon$	Node-equinox period	6798·36171

14. *Principle of forced oscillations.*

This principle, due to Laplace,† is of fundamental importance in the analysis and prediction of tides; it may be stated thus:

The state of any system of bodies in which the primitive conditions of the motion have disappeared through the resistances which the motion encounters, is coperiodic with the forces acting on the system.

If there were but a single strictly periodic force acting upon the given system, the effects of successive periodic actions must eventually become identical, and their periods become that of the force. Now the magnitude of any tide-producing force being very small in comparison with the force of terrestrial gravity, the accelerations imparted to the fluid particles must be very small, and so must be the resulting displacements. Therefore if several such forces act simultaneously, they act as if totally independent of one another and so their effects permit of superposition. This being so, the disturbance may be regarded as made up of terms whose periods are the periods of the several forces.

Here is the clue to what periodic terms ought to be found in the tidal wave; for, there ought to be an oscillation corresponding to each term of the causes producing the tide. Such terms follow from the development of the tide-producing potentials of the moon and sun. Before proceeding to this development, it may be well to consider what periodic terms are suggested from a superficial view of the nature of the tide-producing causes.

WHAT COMPONENTS, OR PERIODIC OSCILLATIONS, SHOULD EXIST IN THE TIDE.

15. Since the lunar tide is due to the difference between the moon's attraction upon the earth as a whole and the enveloping sea, there ought to be set up an oscillation whose period is a half lunar day; and likewise, because of the sun's attraction, an oscillation whose period is a half solar day.

Confining our attention to the case of the moon, it may be observed that the actual lunar day is not of constant length, because the moon's orbit is an ellipse, not a circle; because it is

* Generally, but improperly, called "sidereal day."

† Méc. Cél., Book IV, §§ 16, 17.

inclined to the plane of the earth's equator, and this inclination is not constant; also because the sun disturbs the moon, producing evection and variation. These irregularities in the moon's apparent diurnal motion will, sooner or later, be in certain ways reflected in the lunar tide, which but for them might be assumed to be a wave of uniform period for all places, and of constant amplitude at any given place. Denoting the strictly periodic portion of the tide by M_2, let us inquire, what other strictly periodic oscillations or components of about the same period ought to exist in the lunar tide?

Let m_2 denote the hourly speed of M_2, and Π the period, in hours, of some inequality or irregularity in the moon's motion. If a component have the speed

$$m_2 \pm \frac{360}{\Pi} \tag{5}$$

it will gain or lose on M_2 one period during the time Π, as can be seen by multiplying this speed by Π.* In other words, Π is a synodic period for M_2 and a component with either of the above speeds. The nature of the inequality must be taken into account in order to ascertain which sign to take, and also whether, for the present purpose, Π should include the whole or the half period as usually given. The development of the tide-producing potential shows that the two components, one for each sign, are sometimes required.

If Π = an anomalistic month, then

$$m_2 + \frac{360}{\Pi} = 28{\cdot}9841042 + \frac{360}{661{\cdot}309207} = 29{\cdot}5284789,$$

$$m_2 - \frac{360}{\Pi} = 28{\cdot}9841042 - \frac{360}{661{\cdot}309207} = 28{\cdot}4397295.$$

This suggests that there should exist because of the irregularity in the moon's motion due to its varying parallax, one or both of these components, which may be denoted by L_2 and N_2. Since the moon's apparent diurnal motion is slowest when she is in perigree, the perigean tides should have a longer period than the mean tide; and because of the nearness of the moon to the earth, the range should be increased. The most of the parallax inequality in the tide must be due to that component which, when coinciding with M_2, increases the length of the period; in other words, N_2 is the *larger lunar elliptic component*, and L_2 the *smaller lunar elliptic component*.

If Π = a half tropical month, then

$$m_2 + \frac{360}{\Pi} = 28{\cdot}9841042 + \frac{360}{327{\cdot}858979} = 30{\cdot}0821373,$$

$$m_2 - \frac{360}{\Pi} = 28{\cdot}9841042 - \frac{360}{327{\cdot}858979} = 27{\cdot}8860711.$$

Since the moon's apparent diurnal motion is, *cæteris paribus*, greatest when she is in the equator, and since her tendency to produce tides is then greatest (Principia, Bk. III, Prop. XXIV), the speed of the component causing the declinational inequality in the semidiurnal tide is greater than the speed of M_2. This component is the lunar part of K_2. The other component is not required in connection with this inequality.

If Π = a half synodic month, i. e., the moon's variational period, then

$$m_2 + \frac{360}{\Pi} = 28{\cdot}9841042 + \frac{360}{354{\cdot}367057} = 30{\cdot}0000000,$$

$$m_2 - \frac{360}{\Pi} = 28{\cdot}9841042 - \frac{360}{354{\cdot}367057} = 27{\cdot}9682084.$$

* Cf. Laplace, Méc. Cél., Bk. XIII, § 3.

Cæteris paribus, the apparent diurnal motion of the moon is least when she is in the syzygies, and her distance to the earth is then least. (Principia, Bk. I, Prop. LXVI, or § 87, Part I.) This shows that the lunar tide is then greater than usual and of longer period; consequently the component causing the variational inequality in the semidiurnal tide is the one whose speed is less than that of M_2. It is denoted by μ_2. If the other component, whose speed is 30° per hour, exist at all it will unite with S_2.

Let Π = half of the evectional period in the moon's parallax. Every time the line of apsides passes the sun, the eccentricity of the lunar orbit becomes a maximum (Principia, Bk. I, Prop. LXVI). That is, the amplitude of the oscillation (N_2) which mainly accounts for the parallax effect upon the tide, would, if no additional component were introduced, have an inequality of a period of about 206 days. A component which would probably represent such an inequality must have for its speed one of the two values,

$$\begin{aligned} n_2 + \frac{360}{\Pi} &= 28{\cdot}4397295 + \frac{360}{4941{\cdot}415931} = 28{\cdot}5125831, \\ n_2 - \frac{360}{\Pi} &= 28{\cdot}4397295 - \frac{360}{4941{\cdot}415931} = 28{\cdot}3668759. \end{aligned} \tag{6}$$

At such times of greatest eccentricity the progression of the line of apsides becomes a maximum. This increases the anomalistic month, and so, by the above formula for the speed of N_2, must increase the speed of the oscillation representing the most of the parallax effect at the time when its amplitude becomes a maximum. Consequently, the principal component due to the moon's evection should have the speed 28·5125831. This component is designated as ν_2.

16. Whenever the moon is not upon the equator, the two tides of a day will generally differ because the moon's north polar distance at the time of a superior transit is not equal to her south polar distance at the time of an inferior transit. In other words, if we suppose the moon and anti-moon to successively cross the meridian of a place, the one will be a body of north declination and the other a body of south declination. It would be natural to try to represent this inequality by a wave of variable amplitude attaining a maximum when the moon is far from the equator and vanishing at about the time when the moon crosses the equator. The speed of such a wave should be m_1, or the apparent diurnal motion of the moon about the earth. When the amplitude becomes zero the phase of the wave should suddenly change by 180°. To avoid this great variability in amplitude and this sudden change of phase, a component, lunar K_1, is suggested which shall gain 360° on the moon in a tropical month, and another component, O_1, of about equal amplitude, which shall lose the same amount; for, the speed of the resultant wave will evidently be that of the moon or m_1, its amplitude will be a maximum when the moon is far from the equator, either north or south, and zero when she is upon or near the equator.

If Π = a tropical month, then

$$\begin{aligned} m_1 + \frac{360}{\Pi} &= 14{\cdot}4920521 + \frac{360}{655{\cdot}717958} = 15{\cdot}0410686 = k_1, \\ m_1 - \frac{360}{\Pi} &= 14{\cdot}4920521 - \frac{360}{655{\cdot}717958} = 13{\cdot}9430356 = o_1. \end{aligned} \tag{7}$$

The same line of reasoning would lead one to infer that all lunar components might be accompanied by small components* of almost the same speeds as themselves for taking into account the effects of the regression of the moon's node. For most purposes it is preferable to suppose this inequality accounted for by means of slight variations in the amplitude and epochs of the components which do not owe their origin to the movement of the node.

---

*Styled *lunar nodal* components. See Ferrel's Tidal Researches, p. 43; also United States Coast and Geodetic Survey Report, 1878, pp. 270 et seq. For example, let Π = the node-equinox period; then $m_2 - \frac{360}{\Pi} = 28{\cdot}9818978$ = the speed of Ferrel's $M'_{(1,2)}$. Again, $k_1 + \frac{360}{\Pi} = 15{\cdot}0432750$ = the speed of Ferrel's $M'_{(3,1)}$, and $o_1 - \frac{360}{\Pi} = 13{\cdot}9408292$ = the speed of Ferrel's $M'_{(6,1)}$.

Considering now the portion of the tide due to the sun, and placing Π = an anomalistic year, then

$$s_2 + \frac{360}{\Pi} = 30{\cdot}0000000 + \frac{360}{8766{\cdot}231391} = 30{\cdot}0410667,$$
$$s_2 - \frac{360}{\Pi} = 30{\cdot}0000000 - \frac{360}{8766{\cdot}231391} = 29{\cdot}9589333, \tag{8}$$

and we obtain two speeds which are denoted by r_2 and t_2, respectively.

By placing Π = a half tropical year, the first speed becomes equivalent to k_2. By placing Π = a tropical year, then

$$s_1 + \frac{360}{\Pi} = 15{\cdot}0000000 + \frac{360}{8765{\cdot}812774} = 15{\cdot}0410686,$$
$$s_1 - \frac{360}{\Pi} = 15{\cdot}0000000 - \frac{360}{8765{\cdot}812774} = 14{\cdot}9589314, \tag{9}$$

and we obtain two speeds of which the first is k_1 and the second is denoted by p_1.

There are other oscillations having a truly astronomical origin, but their speeds, as a rule, are less readily obtained from the mean motions of the moon and sun than from the speeds of certain components like O_1, K_1, etc. (See Table 2, already referred to.)

17. *Overtides.*

So far we have been mainly concerned with the periods of the oscillations. That they are simply harmonic is not self evident. In fact, where the water is shallow the crest of the tidal wave must generally move faster than the trough. This, as the wave proceeds, causes the duration of fall to exceed the duration of rise. If upon a simple harmonic oscillation we superpose in a suitable manner a small one of double the speed, we obtain the effect desired. We are therefore led to infer that there probably exist along with M_2, S_2, N_2, etc., the components M_4, S_4, N_4, etc. Again, it seems natural to suppose that, for instance, the principal lunar part of the tide may have other departures than the kind just noted from a simple harmonic form. But whatever its shape may be, it can be represented by a Fourier series of terms whose speeds are simple multiples, like 2, 3, 4, etc., of the speed of the principal component. That is, M_2 may naturally enough in shallow water be accompanied by M_4, M_6, M_8, etc. So for S_2, and other components. These are sometimes called overtides because of their analogy to overtones in musical sounds.

18. *Compound tides.*

In shallow water there may be sensible compound tides; that is, components whose speeds are the sums or differences of the speeds of the principal components. These were suggested by Helmholtz's theory of compound sounds. In fact, we have only to multiply together, in pairs, the principal simple harmonic (cosine) terms which constitute the tide in order to ascertain the theoretical relations between their amplitudes, arguments, and epochs. Ferrel gives quite extended lists of such components in the Report of the United States Coast and Geodetic Survey for 1878, pp. 274–276 (about equivalent to Table 36), and Darwin, a list of the more important cases in the British Association Report for 1883, pp. 74–78.

The velocity of propagation for a high water of, say, the component M_2 is

$$\sqrt{g(h + 3\,M_2)} = (gh)^{\frac{1}{2}} + \tfrac{3}{2}\frac{gM_2}{(gh)^{\frac{1}{2}}}, \tag{10}$$

and of the trough

$$\sqrt{g(h - 3\,M_2)} = (gh)^{\frac{1}{2}} - \tfrac{3}{2}\frac{gM_2}{(gh)^{\frac{1}{2}}}, \tag{11}$$

g being the acceleration of gravity and h the depth at half-tide level. The difference between these two velocities is proportional to

$$\left(\frac{g}{h}\right)^{\frac{1}{2}} M_2. \tag{12}$$

At a given place (since g and h are constant) the time distortion is evidently proportional to M_2; for, to a first approximation, all components, whatever their amplitudes, require about the same time in their propagation from point to point—the velocity being $(gh)^{\frac{1}{2}}$. For convenience, suppose M_2 to be a somewhat varying amplitude, that is, let M_2 not stand for the true amplitude of M_2, but the resultant amplitude when combined with another component of about equal speed. Let its value on two different occasions be denoted by $(M_2)_{,}$, $(M_2)_{,,}$. The question now arises, how do the corresponding amplitudes of M_4 compare with each other? In the first case the duration of fall exceeds one-fourth lunar day by an amount proportional to $(M_2)_{,}$, and in the second, to $(M_2)_{,,}$, according to the equations just obtained But it can be readily seen by combining waves [eqs. (60), (61), Part III] that this excess in the one case is proportional to $\frac{(M_4)_{,}}{(M_2)_{,}}$ and in the other to $\frac{(M_4)_{,,}}{(M_2)_{,,}}$.

$$\therefore \frac{(M_4)_{,}}{(M_2)_{,}} : \frac{(M_4)_{,,}}{(M_2)_{,,}} = (M_2)_{,} : (M_2)_{,,}$$

or

$$(M_4)_{,} : (M_4)_{,,} = (M_2)_{,}^2 : (M_2)_{,,}^2; \tag{13}$$

that is, if the amplitude of a component be different on two occasions, the amplitude of the overtide having double the speed of the fundamental, will vary as the square of the amplitude of the fundamental. (Applying this to the diurnal and semidiurnal waves, one might perhaps surmise that the amplitude of the diurnal wave, and so the diurnal inequalities, vary, from place to place, as the square root of the semidiurnal range.)

Suppose that the cause of the variation in M_2 is the addition of S_2, producing spring tides. At the times of the spring tides, what is the amplitude x of the overtide M_4?

$$M_4 : x = M_2^2 : (M_2+S_2)^2,$$

$$\therefore x = M_4\left(1+\frac{2S_2}{M_2}+\frac{S_2^2}{M_2^2}\right). \tag{14}$$

At the neap tides we have

$$x = M_4\left(1-\frac{2S_2}{M_2}+\frac{S_2^2}{M_2^2}\right). \tag{15}$$

Thus we see that if the quarter diurnal component is to have an approximately fixed position upon the semidiurnal wave it must have a variable amplitude. But, just as in § 15, we infer the speeds of one or two additional quarter diurnals by putting II = a half synodic month expressed in hours.

$$\begin{aligned} m_4+\frac{360}{II} &= 57{\cdot}9682084+\frac{360}{354{\cdot}367057} = 58{\cdot}9841044, \\ m_4-\frac{360}{II} &= 57{\cdot}9682084-\frac{360}{354{\cdot}367057} = 56{\cdot}9523124. \end{aligned} \tag{16}$$

The component defined by the first speed $(=m_2+s_2)$ is MS or $(MS)_4$. The values of x just written show that the amplitude is given by the relation

$$MS = \frac{2S_2}{M_2}\times M_4. \tag{17}$$

The speed of MS being the arithmetical mean between the speeds of M_4 and S_4, the period of MS is, of course, the harmonic mean between the periods of M_4 and S_4.

By putting II = one-fourth of a synodic month, the speed defining the component S_4 is obtained. The values of x show that

$$S_4 = \frac{S_2^2}{M_2^2}\times M_4, \tag{18}$$

which might have been inferred from (13) by writing S_2 for one of the M_2's.

Similarly, tnere should be compound tides dependent upon M_2, N_2; M_2, K_2; etc. So for S_2, N_2; etc.

The speed of MS being the speed of M_2 plus the speed of S_2, its phase must of course vary as the sum of the phases of M_2 and S_2 varies, and so it is customary to take its initial argument equal to the sum of the initial equilibrium arguments of M_2 and S_2. At spring tides MS should conspire with M_4, and at neap tides it should interfere. The speed of M_4 is equal to twice the speed of M_2, and it is customary to take for its initial argument twice the initial equilibrium argument of M_2.

$$\therefore ms = m_2 + s_2; \tag{19}$$

$$\arg_0 MS = \arg_0 M_2 + \arg_0 S_2; \tag{20}$$

$$\text{phase MS } (= \text{phase } M_4, \text{ at springs}) = \text{phase } M_4 + \text{phase } S_2 - \text{phase } M_2; \tag{21}$$

$$\text{phase MS } (= \text{phase } M_4 \pm 180^\circ, \text{ at neaps}) = \text{phase } M_4 + \text{phase } S_2 - \text{phase } M_2; \tag{22}$$

$$mst + \arg_0 MS - MS^\circ = m_4 t + \arg_0 M_4 - M_4^\circ + s_2 t + \arg_0 S_2 - S_2^\circ - (m_2 t + \arg_0 M_2 - M_2^\circ); \tag{23}$$

and so

$$MS^\circ = M_4^\circ + S_2^\circ - M_2^\circ. \tag{24}$$

The more general treatment of this subject is given in § 48.

19. *Meteorological tides.*

The land and sea breezes, and the daily variation in atmospheric pressure, may give rise to a tide whose period is a solar day; and, as the cause is not directly astronomical, it is natural to suppose that overtides would have to accompany the simple harmonic form in order to represent a tide whose origin is so remote.

The change of seasons gives rise to an annual tide, Sa. Such a tide must represent the stages of rivers at river stations. As very high stages are usually of comparatively short duration, it is not reasonable to suppose that a single component can represent the annual changes in river level. In other words, the overtides become comparatively large.

It is hardly necessary to add that while the determination of meteorological tides from long series of observations is valuable for some purposes, their recurrence is not generally certain enough to make them of much value in tidal predictions.

The foregoing has led to, or at least suggested, the most of the components which are to be sought in the process of analyzing the tidal wave. Some of those already brought to notice are, from the nature of their origin, too small to be included in a working schedule.

It may be worth while to here call attention to a practical application of § 18, or rather to empiral rules there hinted at.

20. *Rules for inferring certain nonharmonic quantities from values at a neighboring station.*

Suppose that for a secondary station we know the value of a semidiurnal range of tide, say Mn, and wish to estimate the value of another semidiurnal range, say Sg, or Np from a neighboring principal station where the tide is supposed to be fully known. We naturally put

$$(Sg)_{//} = (Sg)_{/} \frac{(Mn)_{//}}{(Mn)_{/}}, \therefore (Mn)_{//} = (Mn)_{/} \frac{(Sg)_{//}}{(Sg)_{/}}; \tag{25}$$

$$(Np)_{//} = (Np)_{/} \frac{(Mn)_{//}}{(Mn)_{/}}. \tag{26}$$

Similarly for perigean and apogean ranges. But § 18 suggests the hypothesis which observations have in a measure corroborated, that the amplitude of the diurnal wave and all quantities proportional thereto vary between neighboring stations not as the ratio of the mean ranges of tide varies, but rather as the square root of this ratio. Consequently, putting temporarily k for $\sqrt{\frac{(Mn)_{//}}{(Mn)_{/}}}$ we have*

$$(D_1)_{//} = (D_1)_{/} k, \tag{27}$$

$$(HWQ)_{//} = (HWQ)_{/} k, \tag{28}$$

$$(LWQ)_{//} = (LWQ)_{/} k, \tag{29}$$

$$(\text{depression of mean LLW below MSL})_{//} = \tfrac{1}{2} (Mn)_{//} + [(\text{ditto})_{/} - \tfrac{1}{2} (Mn)_{/}] k, \tag{30}$$

* For notation see §§ 2–7, Part I.

(depression of Indian or harmonic tide plane below MSL)$_{,,}$

$$= 0{\cdot}49\ (\mathrm{Sg})_{,,} + [(\text{ditto})_{,} - 0{\cdot}49\ (\mathrm{Sg})_{,}]\ k, \tag{31}$$

$$= 0{\cdot}49\ [(\mathrm{Sg})_{,,} + (\mathrm{D_1})_{,,}], \text{ approximately.} \tag{32}$$

Here "ditto" refers to the left-hand member.

The Indian tide plane is $\mathrm{M_2} + \mathrm{S_2} + \mathrm{K_1} + \mathrm{O_1}$ below mean sea level (MSL). (33)

(depression of tropic LLW below MSL)$_{,,}$

$$= [(\text{ditto})_{,} - \tfrac{1}{2}(\mathrm{Mn})_{,}]\frac{(\mathrm{LWQ})_{,,}}{(\mathrm{LWQ})_{,}}, \tag{34}$$

$$(\mathrm{Gc})_{,,} = (\mathrm{Mn})_{,,} + [(\mathrm{Gc})_{,} - (\mathrm{Mn})_{,}]\frac{(\mathrm{HWQ})_{,,} + (\mathrm{LWQ})_{,,}}{(\mathrm{LWQ})_{,} + (\mathrm{LWQ})_{,}} = (\mathrm{Mn})_{,,} + [(\mathrm{Gc})_{,} - (\mathrm{Mn})_{,}]\ k, \tag{35}$$

$$(\text{tropic HHWI})_{,,} = (\mathrm{HWI})_{,,} + [(\text{tropic HHWI})_{,} - (\mathrm{HWI})_{,}]\frac{(\mathrm{Mn})_{,}}{(\mathrm{Mn})_{,,}} \cdot \frac{(\mathrm{D_1})_{,,}}{(\mathrm{D_1})_{,}}, \tag{36}$$

$$(\text{tropic LLWI})_{,,} = (\mathrm{LWI})_{,} + [(\text{tropic LLWI})_{,} - (\mathrm{LWI})_{,}]\frac{(\mathrm{Mn})_{,}}{(\mathrm{Mn})_{,,}} \cdot \frac{(\mathrm{D_1})_{,,}}{(\mathrm{D_1})_{,}}. \tag{37}$$

When $(\mathrm{D_1})_{,,}$ is known from observation, the value of k from (27) should be used.

21. *Mean longitude.*

The *mean longitude* of a body may be defined as the distance along any given great circle moved over by a uniformly moving or "mean" body from the intersection of its orbit and the circle. It is simply the time since the body passed such intersection multiplied by the average angular velocity of the body. For a fixed body or point the mean, as well as the true, longitude is measured from the foot of the perpendicular let fall from the body or point in question upon the circle in which longitude is reckoned.

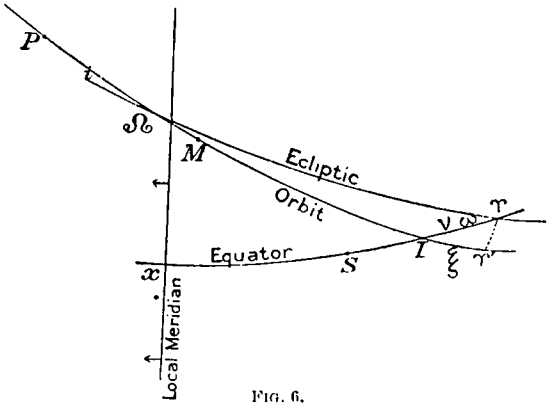

Fig. 6.

If two or more great circles meet in a point, each circle will have a mean body of its own; but all these mean bodies will be at the same distance, at any given instant, from the origin; that is, the real body will have the same mean longitude reckoned in whichever circle. If origins in the several circles be taken a constant distance from the common intersection, the mean longitude in each circle will be altered by the same amount.

The mean longitude of the sun (h) from Υ is the same in the equator as in the ecliptic. If ν denote the R. A. or mean longitude of I in the equator (see Fig. 6), then $h - \nu$ is the sun's mean longitude from the point I. If we take a point Υ' upon the moon's orbit such that $\Omega\,\Upsilon' = \Omega\,\Upsilon$, and denote the distance $\Upsilon' I$ by ξ, then the moon's mean longitude from I, whether in the orbit or the equator, is $s - \xi$, s being her mean longitude from Υ' or Υ in the orbit or the equator.

Fig. 6 supposes the observer to be within the celestial sphere looking outward. The ecliptic, moon's orbit, and the celestial equator are supposed to be fixed, while the projection of the terrestrial meridian upon the celestial sphere moves eastward, as indicated by the arrows, and at the rate of 15° per sidereal hour. S' is a slowly moving point upon the equator, distant 180° from the *mean sun* (S), and so $\Upsilon S' = h \pm 180°$. When the meridian passes over the point S' it is mean local midnight, where we shall assume t, the mean solar time, to be zero. When the meridian is at x, then t, or 15 t, $= S'x$. The hour angle of Υ may be temporarily denoted by g. M denotes the

position of the mean moon, and P that of the lunar perigee. The following equations are given for convenience of reference; t is the time expressed in degrees instead of hours:

$$\begin{aligned}
&\Upsilon I = \nu, && \Upsilon' I = \xi, && Ix = \chi = t + h \pm 180^\circ - \nu,\\
&\Upsilon S = h, && \Upsilon' M = s, && IM = \sigma_1 = s - \xi,\\
&\Upsilon S' = h \pm 180^\circ, && \Upsilon' P = p, && IP = \varpi_1 = p - \xi.\\
&\Upsilon x = g = t + h \pm 180^\circ, && \Upsilon' \Omega = N,\\
&\Upsilon \Omega = N, && S' x = t,
\end{aligned} \tag{38}$$

Most tables of the moon and sun give mean longitude of the lunar and solar elements reckoned in the orbit or the ecliptic and from the origin Υ. To refer any of them to the equator, using I as origin, it is necessary to know the mean longitude of the moon's node (N); then ν and ξ can be obtained by solving the spherical triangle $\Upsilon I \Omega$. To avoid this labor the values of ν and ξ for any value of N may be taken from Table 7.

In all of the work pertaining to the reduction and prediction of tides, we shall adopt the following (Hansen's) values for s, p, h, p_1, and N, which are those used by Darwin in his report for 1883:

$$\begin{aligned}
s &= 150^\circ{\cdot}0419 + [13 \times 360^\circ + 132^\circ{\cdot}67900]T + 13^\circ{\cdot}1764D + 0^\circ{\cdot}5490165H,\\
p &= 240^\circ{\cdot}6322 + 40^\circ{\cdot}69035T + 0^\circ{\cdot}1114D + 0^\circ{\cdot}0046418H,\\
h &= 280^\circ{\cdot}5287 + 360^\circ{\cdot}00769T + 0^\circ{\cdot}9856D + 0^\circ{\cdot}0410686H,\\
p_1 &= 280^\circ{\cdot}8748 + 0^\circ{\cdot}01711T + 0^\circ{\cdot}000047D,\\
N &= 285^\circ{\cdot}9569 - 19^\circ{\cdot}34146T - 0^\circ{\cdot}052954D.
\end{aligned} \tag{39}$$

where T is the number of Julian years of $365\frac{1}{4}$ mean solar days each; D the number of mean solar days; H the number of mean solar hours after Greenwich mean noon January 1, 1880. On account of the slowness of the secular changes in the coefficients of T, D, or H the epoch of this table may, for tidal purposes, be regarded as 1900. See Hansen's Tables de la Lune, p. 15, from which these formulæ may be obtained by putting $t=80$. Newcomb's corrections are not of sufficient magnitude to seriously alter these values.

Affecting the symbols employed by Hansen with a zero subscript, to indicate that Newcomb's corrections have been applied, we have*

$$\begin{aligned}
s &= 360^\circ - \Theta_0 + \omega_0 + g_0 = 335^\circ{\cdot}723766 + (13 \times 360^\circ + 132^\circ{\cdot}67886233)\,(t-1800) + 0^\circ{\cdot}002623\left(\frac{t-1800}{100}\right)^2 + 0^\circ{\cdot}000004\left(\frac{t-1800}{100}\right)^3,\\
p &= 360^\circ - \Theta_0 + \omega_0 = 225^\circ{\cdot}398072 + 40^\circ{\cdot}69050683\,(t-1800) - 0^\circ{\cdot}010037\left(\frac{t-1800}{100}\right)^2 - 0^\circ{\cdot}000010\left(\frac{t-1800}{100}\right)^3,\\
h &= 360^\circ - \Theta_0 + \omega_0' + g_0' = 279^\circ{\cdot}913791 + 360^\circ{\cdot}00768417\,(t-1800) + 0^\circ{\cdot}000308\left(\frac{t-1800}{100}\right)^2,\\
p_1 &= 360^\circ - \Theta_0 + \omega_0' = 279^\circ{\cdot}505952 + 0^\circ{\cdot}01710689\,(t-1800) + 0^\circ{\cdot}000464\left(\frac{t-1800}{100}\right)^2,\\
N &= 360^\circ - \Theta_0 = 33^\circ{\cdot}275319 - 19^\circ{\cdot}34147114\,(t-1800) + 0^\circ{\cdot}002275\left(\frac{t-1800}{100}\right)^2 + 0^\circ{\cdot}000002\left(\frac{t-1800}{100}\right)^3,
\end{aligned} \tag{40}$$

where t is the number of Julian year from the epoch 1800·000, or noon December 31, 1799. By making $t=100$, values for s, p, h, p_1, and N are obtained for noon, January 1, 1900; at that time $s=283^\circ{\cdot}612626$, $p=334^\circ{\cdot}438708$, $h=280^\circ{\cdot}682516$, $p_1=281^\circ{\cdot}217105$, $N=259^\circ{\cdot}130482$. Tables 3, 4, and 6, which do not involve Newcomb's corrections, give for the same time, $s=283^\circ{\cdot}62$, $p=334^\circ{\cdot}44$, $h=280^\circ{\cdot}68$, $p_1=281^\circ{\cdot}22$, $N=259^\circ{\cdot}13$.

Newcomb's recent values† for h and p are for the epoch 1900.

22. *Formulæ for computing I, ν, and ξ.*‡

* Researches on the Motions of the Moon, pp. 268, 274, Washington Observations, Vol. 22, 1875; Harkness, Solar Parallax, pp. 13, 14, Washington Observations, 1885, Appendix III.

† Tables of the Sun, p. 9, Astronomical Papers, Vol. VI, 1895.

‡ B. A. A. S. Report, 1883, pp. 83, 84.

From Fig. 6

$$\cot(N-\xi)\sin N=\cos N\cos i+\sin i\cot\omega; \tag{41}$$

whence

$$\tan\xi=\frac{\sin N\cos N(\cos i-1)+\sin N\sin i\cot\omega}{\sin^2 N+\cos^2 N\cos i+\sin i\cot\omega\cos N}, \tag{42}$$

$$=\frac{\sin i\cot\omega\sin N(1-\tan\frac{1}{2}i\tan\omega\cos N)}{\cos^2\frac{1}{2}i+\sin i\cot\omega\cos N-\sin^2\frac{1}{2}i\cos 2N}. \tag{43}$$

From the figure

$$\cos I=\cos i\cos\omega-\sin i\sin\omega\cos N, \tag{44}$$

$$\sin\nu=\sin i\operatorname{cosec} I\sin N; \tag{45}$$

whence

$$\tan\nu=\frac{\tan i\operatorname{cosec}\omega\sin N}{1+\tan i\cot\omega\cos N}. \tag{46}$$

Regarding i as small we have

$$\tan\xi=i\cot\omega\sin N-\tfrac{1}{2}i^2\sin 2N\frac{1-\frac{1}{2}\sin^2\omega}{\sin^2\omega}, \tag{47}$$

$$\tan\nu=i\operatorname{cosec}\omega\sin N-\tfrac{1}{2}i^2\sin 2N\frac{\cos\omega}{\sin^2\omega}, \tag{48}$$

$$\cos I=(1-\tfrac{1}{2}i^2)\cos\omega-i\sin\omega\cos N. \tag{49}$$

Table 7, taken from Baird's Manual, was computed upon the assumption that $\omega=23^\circ\,27'{\cdot}3$ and $i=5^\circ\,8'{\cdot}8$.

23. *Kepler's problem.*

By analytical geometry the vectorial angle (v),* reckoned from the perigee, is connected with the eccentric angle (E) by the equation

$$\cos v=\frac{\cos E-e}{1-e\cos E}, \tag{50}$$

e being the eccentricity of the orbit. By Kepler's second law equal areas are described in equal times, and so the mean (M) and eccentric anomalies are connected by the equation

$$M=E-e\sin E. \tag{51}$$

The elimination of E from these two equations constitutes the solution of Kepler's problem. For a complete solution see books on mathematical astronomy, such as Dziobek's Mathematical Theories of Planetary Motions, Résal's Mécanique Céleste, etc. For most tidal purposes it is sufficient to carry the solution to the second powers of e, and this may be easily accomplished in the following manner:

If we develop by Taylor's theorem the value of v from the first equation written in the form

$$v=\cos^{-1}(\cos E+h) \tag{52}$$

where

$$h=-\frac{e\sin^2 E}{1-e\cos E} \tag{53}$$

we obtain

$$v=E+e\sin E+\tfrac{1}{4}e^2\sin 2E+\ \ldots\ . \tag{54}$$

The second equation gives

$$M=E-e\sin(M+e\sin M),$$

or

$$E=M+e\sin(M+e\sin M); \tag{55}$$

$$\therefore E=M+e\sin M+\tfrac{1}{2}e^2\sin 2M, \text{ to the second power of } e, \tag{56}$$

$$e\sin E=e\sin M+\tfrac{1}{2}e^2\sin 2M, \text{ to the second power of } e, \tag{57}$$

* The present use of the letters v, E, M, and h will probably be confined to this paragraph.

$$\tfrac{1}{4}e^2 \sin 2E = \tfrac{1}{4}e^2 \sin 2M, \text{ to the second power of } e; \tag{58}$$

$$\therefore v = M + 2e \sin M + \tfrac{5}{4}e^2 \sin 2M, \text{ to the second power of } e. \tag{59}$$

24. *Reduction to the equator, and conversely.*

Let A denote the inclination of an orbit to the equator, and B a right angle formed by the equator and the hour circle passing through the body. By spherical trigonometry we have

$$\tan b = \frac{\tan c}{\cos A} = \tan c\,(1 - \sin^2 A)^{-\frac{1}{2}}, \tag{60}$$

$$= \tan c\,(1 + \tfrac{1}{2}\sin^2 A + \tfrac{3}{8}\sin^4 A + \quad . \quad . \quad . \quad); \tag{61}$$

$$\therefore b = \tan^{-1}(\tan c + k), \text{ say.} \tag{62}$$

By Taylor's theorem

$$b = c + \tfrac{1}{4}\sin 2c \sin^2 A + (\tfrac{1}{8}\sin 2c + \tfrac{1}{32}\sin 4c)\sin^4 A + \quad . \quad . \quad . \quad . \tag{63}$$

The usual formula for this is, unless the exact solution by trigonometry be preferred,

$$b = c + \tan^2 \tfrac{1}{2}A \sin 2c - \tfrac{1}{2}\tan^4 \tfrac{1}{2}A \sin 4c + \tfrac{1}{3}\tan^6 \tfrac{1}{2}A \sin 6c - \quad . \quad . \quad . \quad ; \tag{64}$$

but for certain purposes it is convenient to expand in powers of sin A. Also,

$$\tan c = \tan b \cos A = \tan b\,(1 - \sin^2 A)^{\frac{1}{2}}, \tag{65}$$

$$= \tan b\,(1 - \tfrac{1}{2}\sin^2 A - \tfrac{1}{8}\sin^4 A); \tag{66}$$

$$\therefore c = \tan^{-1}(\tan b + k'), \text{ say,} \tag{67}$$

$$= b - \tfrac{1}{4}\sin 2b \sin^2 A - (\tfrac{1}{8}\sin 2b - \tfrac{1}{32}\sin 4b)\sin^4 A. \tag{68}$$

25. *Approximate expressions for the right ascension of the sun or moon.*

The object of this paragraph is to show that if we displace in time the strictly periodic portion of the equilibrium lunar (solar) tide by the lunar (solar) components, the resulting wave will have its crest beneath the tidal body or 180° therefrom.

The true longitude of the sun is, by Kepler's problem, § 23,

$$l = h + 2e_1 \sin(h - p_1) + \tfrac{5}{4}e_1^2 \sin 2(h - p_1), \tag{69}$$

where h denotes the mean longitude of the sun, p_1 that of the solar perigee, and e_1 the eccentricity of the earth's orbit = 0·01679. The coefficients $2e_1$, $\frac{5}{4}e_1^2$, are converted into degrees by means of the factor 57·3, thus giving

$$l = h + 1^\circ\!\cdot\!924 \sin(h - p_1) + 0^\circ\!\cdot\!020 \sin 2(h - p_1). \tag{70}$$

The right ascension corresponding to l is, § 24,

$$\alpha = l - \tfrac{1}{4}\sin^2\omega \sin 2l - \sin^4\omega\,(\tfrac{1}{8}\sin 2l - \tfrac{1}{32}\sin 4l), \tag{71}$$

$$= h + 1^\circ\!\cdot\!924 \sin(h - p_1) + 0^\circ\!\cdot\!020 \sin 2(h - p_1) - 2^\circ\!\cdot\!450 \sin 2h + 0^\circ\!\cdot\!045 \sin 4h, \tag{72}$$

ω, the obliquity of the ecliptic being taken as 23° 27′·3.

Now since all solar tides are due to the sun, the crest of the solar wave composed of these partial tides ought, in the case of semidiurnals, to have its phase equal to twice the hour angle of the sun.

Sun's right ascension × 2

$$= 2h - \text{acceleration in } S_2 \text{ due to } T_2 - \text{“ “ } S_2 \text{ “ “ } R_2 - \text{“ “ } S_2 \text{ “ “ solar } K_2, \text{ Table 15.} \tag{73}$$

This is approximately equal to

$$2\,h - \frac{T_2}{S_2}\frac{t_2}{s_2}\sin(\arg T_2 - \arg S_2, = p_1 - h)$$

$$- \frac{R_2}{S_2}\frac{t_2}{s_2}\sin(\arg R_2 - \arg S_2, = h - p_1 + 180^\circ)$$

$$- \frac{K_2}{S_2}\frac{k_2}{s_2}\sin(\arg K_2 - \arg S_2, = 2\,h). \qquad (74)$$

Here "arg" stands for the equilibrium argument, $V + u$, of Table 1; it is equivalent to the phase of the oscillations, if its epoch (or lag) be zero; K_2 here denotes the solar part of K_2.

Putting in the theoretical values of these component ratios, we have for twice the sun's right ascension *

$$2\,h - 3^\circ{\cdot}32\sin(p_1 - h) + 0^\circ{\cdot}47\sin(h - p_1) - 4^\circ{\cdot}95\sin 2\,h;$$

or

$$2\,h + 3^\circ{\cdot}79\sin(h - p_1) - 4^\circ{\cdot}95\sin 2\,h, \qquad (75)$$

the half of which is

$$h + 1^\circ{\cdot}90\sin(h - p_1) - 2^\circ{\cdot}48\sin 2\,h. \qquad (76)$$

This value of the sun's right ascension agrees well with value (72). Thus it is seen that T_2, R_2, and solar K_2 account for irregularities in the solar wave corresponding well with the irregularities in the motion of the sun. The quantity $+ 1^\circ{\cdot}90\sin(h - p_1) - 2^\circ{\cdot}48\sin 2\,h$ is, when converted into time, very nearly the equation of time (to change apparent to mean time), Table 30. For,

Sun's right ascension = right ascension of mean sun + equation of time.

In a precisely similar manner the right ascension of the moon reckoned from I is

$$\sigma_1 + 6^\circ{\cdot}292\sin(\sigma_1 - \varpi_1) + 0^\circ{\cdot}216\sin 2(\sigma_1 - \varpi_1)$$

$$- 14^\circ{\cdot}324\sin^2 I\sin 2\,\sigma_1 - \sin^4 I\,(7^\circ{\cdot}162\sin 2\,\sigma_1 - 1^\circ{\cdot}790\sin 4\,\sigma_1), \qquad (77)$$

σ_1 denoting the mean longitude of the moon from I, ϖ_1 that of the lunar perigee, the eccentricity of the orbit being 0·05491. A more accurate value from Hansen's tables is, taking into account the higher powers of e, the evection, variation, and the annual inequality,

$$\sigma_1 + 6^\circ{\cdot}290\sin(\sigma_1 - \varpi_1) + 0^\circ{\cdot}216\sin 2(\sigma_1 - \varpi_1)$$

$$- 14^\circ{\cdot}324\sin^2 I\sin 2\,\sigma_1 - \sin^4 I\,(7^\circ{\cdot}162\sin 2\,\sigma_1 - 1^\circ{\cdot}790\sin 4\,\sigma_1)$$

$$+ 1^\circ{\cdot}241\sin(s - 2\,h + p)$$

$$+ 0^\circ{\cdot}596\sin 2(s - h)$$

$$- 0^\circ{\cdot}183\sin(h - p_1). \qquad (78)$$

The two terms in sin 2 σ_1 may be added together by giving to sin I a mean value. This expression increased by ν is the moon's right ascension reckoned from Υ.

By § 21 the above expression may be written

$$s - \xi + 6^\circ{\cdot}290\sin(s - p) + 0^\circ{\cdot}216\sin 2(s - p)$$

$$- 15^\circ{\cdot}458\sin^2 I\sin 2(s - \xi) + \sin^4 I\,[1^\circ{\cdot}790\sin 4(s - \xi)]$$

$$+ 1^\circ{\cdot}241\sin(s - 2\,h + p)$$

$$+ 0^\circ{\cdot}596\sin(2\,s - 2\,h)$$

$$- 0^\circ{\cdot}183\sin(h - p_1). \qquad (79)$$

* I. e., making use of Table 1 and multiplying by 57·3.

The harmonic components give for twice the right ascension of the moon, likewise reckoned from I,

$$
\begin{aligned}
&2\,s - 2\,\nu - 12^{\circ}{\cdot}50 \sin (s - p) - 1^{\circ}{\cdot}42 \sin 2\,(p - s) && \mathrm{N}_2,\ \mathrm{L}_2;\ 2\,\mathrm{N} \\
&\quad - 32^{\circ}{\cdot}47 \sin^2 I \sin 2\,(s - \xi) && \text{lunar } \mathrm{K}_2 \\
&\quad - 2^{\circ}{\cdot}54 \sin (2\,h - s - p) && \nu_2,\ \lambda_2 \\
&\quad - 1^{\circ}{\cdot}33 \sin 2\,(h - s). && \mu_2 \qquad (80)
\end{aligned}
$$

Reckoned from ♈, the double right ascension of the moon is this expression with the term $2\,\nu$ omitted. Since ν is nearly equal to ξ, this agrees well with twice the preceding expression, which shows that the mean lunar tide is so perturbed by additional components as to follow the true moon. Either enables a person to compute the approximate time of the moon's transit by means of Table 3.

In a similar manner we might compare ordinary periodic expressions for the moon's parallax or radius vector with the expression for the amplitude of the semidiurnal wave regarded as the M_2 wave perturbed by N_2, L_2, etc.

26. *Astres fictifs, fictitious moons, etc.*

For aiding the imagination, Laplace* introduced a set of fictitious bodies having certain analogies to the mean sun and mean moon. Such bodies move uniformly in the celestial equator and at a constant distance from the earth. The successive transits of any *astre fictif* across a given terrestrial meridian defines a corresponding day, differing in length but little from twenty-four mean solar hours.

The Tidal Committee of the British Association made use of such fictitious bodies as the harmonic analysis of tides seemed to demand.† By the introduction of suitable bodies, which were not used by Laplace, the parallaxes of the mean sun and mean moon become constant.

The assigned position of a fictitious body has, of course, a direct influence upon the epoch of any component tide determined with reference to the body. The following quotation from a paper by Thomson is found upon page 481 of the British Association Report for 1878:

ε (technically called the epoch) is the angle, reckoned in degrees, which an arm revolving uniformly in the period of the particular tide has to run through till high water of this constituent, from a certain instant or era of reckoning defined for each constituent as follows:—

Definition of ε.‡—To explain the meaning of the values of ε given in the following table of results, it is convenient to use Laplace's "astres fictifs," or ideal stars. Let them be as follows:—

M the "mean moon."

S the "mean sun."

K for diurnal tides, a star whose right ascension is 90°.

K for semi-diurnal tide, the "first point of Aries," or ♈.

O a point moving with angular velocity $2\,\sigma$, and having 270° of right ascension when M is in ♈.

Q a point moving with angular velocity $2\,\sigma - \varpi$, and 270° before M in right ascension when the longitude of M is half the longitude of the perigee.

P a point moving with angular velocity $2\,\eta$, having 270° of right ascension when S is in ♈.

N a point moving with angular velocity, $\frac{3}{2}\,\sigma - \frac{1}{2}\,\varpi$, and passing alternately through the perigee and apogee of the moon's orbit when M is in perigee.

L a point moving with angular velocity, $\frac{1}{2}\,\sigma + \varpi$, and passing alternately through 90° on either side of the perigee of the moon's orbit when M is in perigee.

The value of ε in each case above means the number of 360ths of its period which the corresponding tidal constituent has still to execute till its high-water from the instant when the ideal star crosses the meridian of the place. Thus if n denote the periodic speed of the particular tide in degrees per mean solar hour, its time of high-water is $\frac{\varepsilon}{n}$, reckoned in mean solar hours after the transit of the ideal star.

---

* Méc. Cél., Bk. IV, §§ 17, 19. Cf. expression for the tide in Bk. XIII. See under Laplace.

† B. A. A. S. Reports, 1868, p. 496; 1876, p. 293; 1878, p. 481. Thomson and Tait, Natural Philosophy (Ed. 1883), § 848.

‡ "This definition for the several cases of K diurnal, and O, P, Q, and L differs by 90° or 180° or 270° from the definition given in the British Association Report (1876) for a reason obvious on inspection of Tables I. and II., pp. 304 and 305 of that report, which (except in respect to the longitude of perigee and perihelion) show ε as previously reckoned for the several constituents."

It is to be remarked that there are two K bodies always 90° apart in the celestial equator. Darwin discards the *astres fictifs*, and says in his report for 1883:

In the present Report the method of mathematical treatment differs considerably from that of Sir William Thomson. In particular, he has followed, and extended to the diurnal tides, Laplace's method of referring each tide to the motion of an *astre fictif* in the heavens, and he considers that these fictitious satellites are helpful in forming a clear conception of the equilibrium theory of tides. As, however, I have found the fiction rather a hindrance than otherwise, I have ventured to depart from this method, and have connected each tide with an 'argument,'* or an angle increasing uniformly with the time and giving by its hourly increase the 'speed' of the tide. In the method of the *astres fictifs*, the speed is the difference between the earth's angular velocity of rotation and the motion of the fictitious satellite amongst the stars. It is a consequence of the difference in the mode of treatment, and of the fact that the elliptic tides are here developed to a higher degree of approximation, that none of the present Report is quoted from the previous ones.

In case of a diurnal component, the argument is evidently the hour angle of the corresponding *astre fictif;* in case of a semidiurnal, twice the hour angle; etc.

Since these bodies do not really exist in nature, but are created for aiding the imagination, it seems justifiable to carry the fiction one step farther if simplicity can be thereby attained. Imagine a system of bodies to have an apparent and uniform motion around the earth from east to west. Let their periods be equivalent to the periods of the various short-period tidal components. That is, an M_2 moon or body will cross the meridian of a place twice each mean lunar day; an M_4 moon, four times; etc. They are to be so placed in the celestial equator that the equilibrium arguments of the components ($V+u$) are the hour angles of the fictitious bodies. Each body has the property of producing a $\begin{matrix}\text{maximum}\\ \text{minimum}\end{matrix}$ of the corresponding component tide a certain number of hours (= epoch expressed in time) after its $\begin{matrix}\text{upper}\\ \text{lower}\end{matrix}$ transit. (See Fig. 7, Part I.)

27. *Sum of the series*

$$\cos\theta + \cos 2\theta + \cos 3\theta + \quad . \quad . \quad . \quad + \cos n\theta. \tag{81}$$

If n denote any positive integer and θ any angle, then

$$2\cos\theta\cos n\theta = \cos(n+1)\theta + \cos(n-1)\theta \tag{82}$$

because the second member of this equation is equal to

$$\cos n\theta\cos\theta - \sin n\theta\sin\theta + \cos n\theta\cos\theta + \sin n\theta\sin\theta.$$

Now giving to n the values 1, 2, 3, . . . n, we have

$$2\cos\theta \sum_{n=1}^{n=n} \cos n\theta = \sum_{n=1}^{n=n} \cos(n+1)\theta + \sum_{n=1}^{n=n} \cos(n-1)\theta. \tag{83}$$

Calling $\sum_{n=1}^{n=n} \cos n\theta$, S, we obviously have

$$2S\cos\theta = 2S + 1 - \cos\theta + \cos(n+1)\theta - \cos n\theta; \tag{84}$$

$$\therefore S = -\tfrac{1}{2} + \frac{\cos n\theta - \cos(n+1)\theta}{2(1-\cos\theta)}, \tag{85}$$

$$= -\tfrac{1}{2} + \tfrac{1}{2}\frac{\sin(2n+1)\frac{\theta}{2}}{\sin\frac{\theta}{2}} = -1 + \frac{\sin(n+1)\frac{\theta}{2}}{\sin\frac{\theta}{2}}\cos\frac{n}{2}\theta. \tag{86}$$

Special case $n\theta = 360°$. Either value of S just obtained reduces to zero.

28. *Note on the determination of empirical constants.*

Let there be three empirical constants (x, y, z)† to be determined from n observations upon

* This we have generally called "equilibrium argument," denoting it by arg. We then have arg—epoch=phase.

† The notation used in this paragraph is temporary.

the value of a linear function involving them $(a_ix + b_iy + c_iz)$. This function changes its value for different assigned values of the coefficients (a, b, c) which are absolutely known from theory, and which are made to vary in accordance with the circumstances of the observations. Let $-k_i$ denote an observed value under the circumstances whose characteristic is i. If there is no error in this measurement, then

$$a_ix + b_iy + c_iz + k_i = 0. \tag{87}$$

If there were three accurate measurements $(i = 1, 2, 3)$, then x, y, z would be accurately determined; if the three measurements were not accurate, x, y, z would still be definitely, though not accurately, determined. Now when there are more than three $(i = 1, 2, 3, \ldots n)$ slightly inaccurate measurements, the values of x, y, z determined from any three observation equations will not exactly satisfy the others. As it is not known which observation is in error, all may be assumed to be slightly in error, and the values of x, y, z might be found by taking the mean values of all determinations. But such a process would not give the most probable values of the unknown quantities.

Instead of actually solving all equations for x, y, z, suppose these latter to have such values as are the most probable under the given set of measurements. Clearly none of the observation equations will now have zero as its right-hand member, but the one whose characteristic is i will have a small residual v_i, say, instead of zero. If x, y, z have their most probable values, it can be shown from the theory of accidental errors that they render the sum of the squares of the residuals $(v_1^2 + v_2^2 + \ldots + v_i^2 + \ldots + v_n^2)$ of the n observation equations a minimum.* But the minimum of the function

$$\sum_{i=1}^{i=n} (a_ix + b_iy + c_iz + k_i)^2 \tag{88}$$

is found by equating each of the partial derivatives to zero; for, one can show that Lagrange's conditions are satisfied for this function.† The three resulting equations (which are the three normal equations) are

$$\begin{aligned}
&\sum_{i=1}^{i=n} a_i(a_ix + b_iy + c_iz + k_i) = 0,\\
&\sum_{i=1}^{i=n} b_i(a_ix + b_iy + c_iz + k_i) = 0,\\
&\sum_{i=1}^{i=n} c_i(a_ix + b_iy + c_iz + k_i) = 0.
\end{aligned} \tag{89}$$

For any number of unknown quantities the normal equations will have the above form, and their number will be equal to the number of the unknowns.

Special case. If $a_i, b_i, c_i, \ldots$ be of the form $\begin{matrix}\sin\\ \cos\end{matrix}\left(ri\frac{2\pi}{n}\right)$, where r is an integer ranging from 0 to $n-1$, all coefficients in the normal equations will be zero except those of the form Σa_i^2, Σb_i^2, Σc_i^2 . . . which are respectively equal to $\frac{1}{2}$ except for the case $r = 0$, which gives 1 instead of $\frac{1}{2}$. The products a_ib_i, b_ic_i . . . must each be zero because they can be written in the form

$$\begin{aligned}
\cos A \cos B &= \tfrac{1}{2}\{\cos(A - B) + \cos(A + B)\},\\
\cos A \sin B &= \tfrac{1}{2}\{\sin(A + B) - \sin(A - B)\},\\
\sin A \cos B &= \tfrac{1}{2}\{\sin(A - B) + \sin(A + B)\},\\
\sin A \sin B &= \tfrac{1}{2}\{\cos(A - B) - \cos(A + B)\},
\end{aligned} \tag{90}$$

and because the algebraic sum of the sines or cosines of angles which divide a circle into a whole number (n) of equal parts is zero (§ 27).

* See any treatise on least squares.

† See any standard treatise on differential calculus.

CHAPTER III.

THE TIDE-PRODUCING POTENTIAL.

29. The attracting force of the moon upon any particle of unit mass whose distance is D from the moon's center is

$$\frac{\mu M}{D^2} \tag{91}$$

where M is the moon's mass and μ the attraction between unit masses unit distance apart.* Now if W be such a function that

$$\frac{\partial W}{\partial D} = -\frac{\mu M}{D^2}, \tag{92}$$

it is, by definition, the *gravitational potential* of the moon at the point where the particle is situated; for, in the direction of D increasing, the force is negative. From this equation it is seen that the moon's potential decreases as the distance of the particle from the moon increases. If

$$W = \frac{\mu M}{D} + \text{constant}, \tag{93}$$

equation (92) is satisfied.† Let

r = the distance of the moon's center from the center of the earth,

ρ = the distance of the disturbed particle from the center of the earth,

θ = the angle at the earth's center between the disturbed particle and the moon's center. In the plane triangle defined by the earth's center, the moon's center, and the disturbed particle, the lengths of two sides are r and ρ, while the included angle is θ. Consequently the remaining side, whose length is D, has the value

$$\sqrt{r^2 - 2r\rho\cos\theta + \rho^2}. \tag{94}$$

Replacing D by this value and making the constant zero, (93) becomes

$$W = \frac{\mu M}{\sqrt{r^2 - 2r\rho\cos\theta + \rho^2}} \tag{95}$$

Suppose the earth and the particle P to constitute a system not subject to deformation by the moon. The whole system is urged toward the moon just as if each unit particle of the system had applied to it the force

$$\frac{\mu M}{r^2} \tag{96}$$

acting in a direction parallel to the line joining the centers of the earth and moon. The components of this force are

$$m_1\frac{\mu M}{r^2}, \qquad m_2\frac{\mu M}{r^2}, \qquad m_3\frac{\mu M}{r^2}, \tag{97}$$

where m_1, m_2, m_3 are direction-cosines of the line joining the centers of the earth and moon referring to axes fixed in the earth, the origin being the earth's center. If U denote the potential

---

*$g = \frac{E}{a^2}\mu$; $\therefore\ \mu = g\frac{a^2}{E} = \frac{g}{\frac{4}{3}\pi a\delta_e}$, since E = earth's mass = volume × density = $\frac{4}{3}\pi a^3\delta_e$.

† It is customary to give the potential a sign such that its value will decrease when we go in the direction indicated by an arrow representing the force; i. e., the partial derivatives are not the forces in the corresponding directions as contemplated in this chapter, but minus such forces.

at P of this force, it must be such a function of x, y, z, the coördinates of P, that its partial derivations shall be the above component forces. Such a function is

$$U = \frac{\mu M}{r^2}(m_1 x + m_2 y + m_3 z) + \text{constant.} \tag{98}$$

If p_1, p_2, p_3 denote the direction-cosines of P referring to the axes mentioned in connection with m_1, m_2, m_3, we have

$$x = p_1 \rho, \qquad y = p_2 \rho, \qquad z = p_3 \rho\,; \tag{99}$$

$$\therefore \cos\theta = p_1 m_1 + p_2 m_2 + p_3 m_3, \tag{100}$$

$$= \sin\lambda \sin\delta + \cos\lambda \cos\delta \cos(\text{moon's hour angle}), \tag{101}$$

where

$\lambda =$ the latitude of P,
$\delta =$ the declination of the moon.

$$\therefore U = \frac{\mu M \rho}{r^2}\cos\theta + \text{constant.} \tag{102}$$

Now let the system be subject to deformation; in other words, let there be an opportunity for P to move relatively to the earth's center or to a rigid nucleus which may surround the center. The force causing this movement has for its potential

$$W - U = V, \text{ say;} \tag{103}$$

or

$$\frac{\mu M}{\sqrt{r^2 - 2r\rho\cos\theta + \rho^2}} - \frac{\mu M \rho}{r^2}\cos\theta - \text{constant} = V. \tag{104}$$

At the earth's center the potential of the tide-producing force must be zero because W and U are there equal. Making $\rho = 0$ and $V = 0$, the constant becomes equal to

$$+\frac{\mu M}{r}; \tag{105}$$

$$\therefore V = \frac{\mu M}{\sqrt{r^2 - 2r\rho\cos\theta + \rho^2}} - \frac{\mu M}{r} - \frac{\mu M \rho}{r^2}\cos\theta.^* \tag{106}$$

The expression

$$\frac{1}{\sqrt{r^2 - 2r\rho\cos\theta + \rho^2}} \tag{107}$$

may be written

$$\frac{1}{r}\left(1 - 2\frac{\rho}{r}\cos\theta + \frac{\rho^2}{r^2}\right)^{-\frac{1}{2}}. \tag{108}$$

This expanded in powers of $\frac{\rho}{r}$ becomes

$$\frac{1}{r}\left(P_0 + P_1\frac{\rho}{r} + P_2\frac{\rho^2}{r^2} + P_3\frac{\rho^3}{r^3} + \ldots\right) \tag{109}$$

* Cf. Laplace Méc. Cél., Bk. III, § 23, and Ferrel, Tidal Researches, p. 25. This expression, without the term $-\mu M/r$, is the disturbing function Ω in the astronomical problem of three bodies.

where

$$P_0 = 1,$$

$$P_1 = \cos\theta,$$

$$P_2 = \frac{3\cos^2\theta - 1}{2}, \tag{110}$$

$$P_3 = \frac{5\cos^2\theta - 3\cos\theta}{2},$$

. . . . . .

The P's are functions of θ alone and are called zonal harmonics or Legendre's coefficients. Equation (106) now becomes

$$V = \mu M\left[\frac{\rho^2}{r^3}\left(\frac{3\cos^2\theta - 1}{2}\right) + \frac{\rho^3}{r^4}\left(\frac{5\cos^3\theta - 3\cos\theta}{2}\right) + \ . \ . \ .\ \right], \tag{111}$$

or

$$V = \frac{\mu M}{r}\left[P_2\frac{\rho^2}{r^2} + P_3\frac{\rho^3}{r^3} + \ . \ . \ .\ \right]. \tag{112}$$

30. *Approximate determination of the tide-producing potential.**

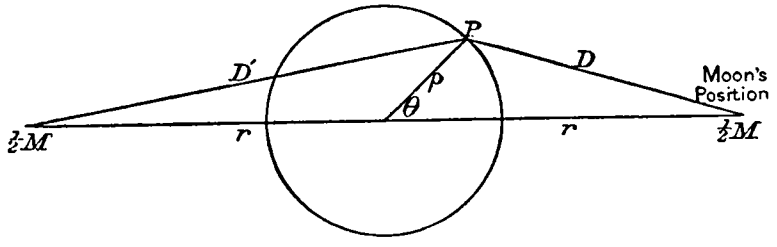

FIG. 7.

Imagine the moon to be divided into two equal parts, the one occupying the moon's position, the other a position diametrically opposite but at an equal distance from the earth's center.

The potential of the entire moon at any point P now becomes

$$W = \tfrac{1}{2}\mu M\left(\frac{1}{D'} + \frac{1}{D}\right) = \frac{\frac{1}{2}\mu M}{\sqrt{r^2 + 2r\rho\cos\theta + \rho^2}} + \frac{\frac{1}{2}\mu M}{\sqrt{r^2 - 2r\rho\cos\theta + \rho^2}}, \tag{113}$$

$$= \tfrac{1}{2}\mu M\frac{1}{r}\left(P_0 - P_1\frac{\rho}{r} + P_2\frac{\rho^2}{r^2} - \ . \ . \ .\ + P_0 + P_1\frac{\rho}{r} + P_2\frac{\rho^2}{r^2} + \ . \ . \ .\ \right), \tag{114}$$

$$= \frac{\mu M}{r}\left(P_0 + P_2\frac{\rho^2}{r^2} + P_4\frac{\rho^4}{r^4} + \ . \ . \ .\ \right); \tag{115}$$

the P's have been defined in § 29.

$$\therefore\ W = \frac{\mu M}{r} + \mu M\left[\frac{\rho^2}{r^3}\left(\frac{3\cos^3\theta - 1}{2}\right) + \ . \ . \ .\ \right]. \tag{116}$$

Since one-half of the moon is upon one side of the earth's center and the other half upon the other side, and at an equal distance from it, the earth's center, and so the solid portion of the earth, has no tendency to move. That is, the force tending to move the earth's center is zero;

$$\therefore\ \frac{\partial U}{\partial x} = \frac{\partial U}{\partial y} = \frac{\partial U}{\partial z} = 0; \tag{117}$$

$$\therefore\ U = \text{constant}. \tag{118}$$

* See Thomson and Tait, Natural Philosophy, § 804.

The tide-producing potential is

$$V = W - U = \frac{\mu M}{r} + \mu M \left[\frac{\rho^2}{r^3}\left(\frac{3\cos^2\theta - 1}{2}\right) + \quad . \quad . \quad . \quad\right] - \text{constant.} \tag{119}$$

At the center of the earth $V = 0$ and $\rho = 0$;

$$\therefore \text{constant} = + \frac{\mu M}{r}. \tag{120}$$

The required tide-producing potential is, then,

$$V = \mu M \left[\frac{\rho^2}{r^3}\left(\frac{3\cos^2\theta - 1}{2}\right)\right] \tag{121}$$

to the third power of $\frac{1}{r}$, or of the moon's parallax.

31. *Proctor's construction.*

The following is Proctor's construction for showing graphically the disturbing influence of the sun upon the moon; it is here used to show the tide-producing force of the moon M upon a unit particle P.

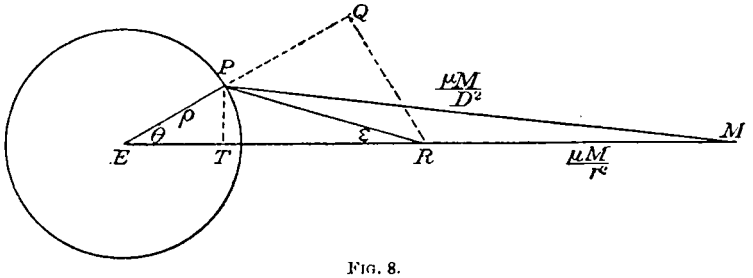

FIG. 8.

It is assumed that the line PM whose length is D, represents a force acting on P toward M, the magnitude of this force really being $\mu M/D^2$; that is, the attraction of the moon on a unit mass situated at P. Upon the same scale RM, where $TR = 2ET$, represents the attraction, in magnitude and direction, of the moon upon a unit mass at E, the earth's center; or, the attraction of the moon upon the entire earth divided by the earth's mass. The line PR represents both in magnitude and direction the disturbing force of M upon P.

For, the attraction at E is

$$PM \times \frac{\overline{PM}^2}{\overline{EM}^2}; \tag{122}$$

or, since PM and TM are very nearly equal and $EM = ET + TM$, it is

$$TM\left(1 - \frac{2ET}{TM}\right),$$

or

$$TM - 2ET. \tag{123}$$

The line PR, completing the triangle of forces, represents the force tending to move P relatively to E.

The potential of this force, since its action is relative to E, can be found by integrating the force PR or its components along the directions of their action. We shall integrate the component PQ along the line EQ.

Upon the same scale as before, the line TR represents, because of the remoteness of M, the force

$$\frac{\mu M}{D^2} - \frac{\mu M}{r^2}. \tag{124}$$

By construction,

$$\tan \varepsilon = \tfrac{1}{2} \tan \theta. \tag{125}$$

The angle RPQ is equal to $\theta + \varepsilon$. The force represented by PQ must be

$$\left(\frac{\mu M}{D^2} - \frac{\mu M}{r^2}\right) \sec \varepsilon \cos (\varepsilon + \theta), \tag{126}$$

$$= \left(\frac{\mu M}{D^2} - \frac{\mu M}{r^2}\right) \frac{3 \cos^2 \theta - 1}{2 \cos \theta}, \tag{127}$$

$$= \mu M \left(\frac{1}{r^2} + \frac{2\rho}{r^2} \cos \theta + \quad . \quad . \quad . \quad - \frac{1}{r^2}\right) \frac{3 \cos^2 \theta - 1}{2 \cos \theta}, \tag{128}$$

$$= \frac{\mu M \rho}{r^3} (3 \cos^2 \theta - 1),^* \tag{129}$$

neglecting higher powers of the moon's parallax.

$$\therefore V = \int \frac{\mu M \rho}{r^3} (3 \cos^2 \theta - 1)\, \partial\rho = \frac{\mu M \rho^2}{r^3} \frac{3 \cos^2 \theta - 1}{2} + \text{constant.} \tag{130}$$

The tangential component at P of the force PR has for its value QR, or

$$\left(\frac{\mu M}{D^2} - \frac{\mu M}{r^2}\right) \sec \varepsilon \sin (\varepsilon + \theta) = 3 \frac{\mu M \rho}{r^3} \sin \theta \cos \theta.^* \tag{131}$$

But this is

$$\frac{-\partial V}{\rho \partial \theta}. \tag{132}$$

Hence the constant in V contains neither ρ nor θ; in other words, it is the same for all points of the earth. At the earth's center it is zero, and must remain so for all positions of P.

$$\therefore V = \frac{\mu M \rho^2}{r^3} \frac{3 \cos^2 \theta - 1}{2}. \tag{133}$$

32. *Spherical harmonic expression for*

$$\cos^2 \theta - \tfrac{1}{3}. \tag{134}$$

By § 29,

$$\cos \theta = p_1 m_1 + p_2 m_2 + p_3 m_3. \tag{135}$$

From analytical geometry we have

$$p_1^2 + p_2^2 + p_3^2 = 1, \qquad m_1^2 + m_2^2 + m_3^2 = 1; \tag{136}$$

and so of course

$$(p_1^2 + p_2^2 + p_3^2)\,(m_1^2 + m_2^2 + m_3^2) = 1. \tag{137}$$

From these relations it follows that

$$\cos^2 \theta - \tfrac{1}{3} = 2 p_1 p_2 m_1 m_2 + 2 \frac{p_1^2 - p_2^2}{2} \frac{m_1^2 - m_2^2}{2} + 2 p_2 p_3 m_2 m_3$$
$$+ 2 p_1 p_3 m_1 m_3 + \tfrac{3}{2} \frac{p_1^2 + p_2^2 - 2 p_3^2}{3} \frac{m_1^2 + m_2^2 - 2 m_3^2}{3}. \tag{138}$$

* Cf. values of $-P$, $-T$, p. 25, Godfray's Lunar Theory; Thomson and Tait, Natural Philosophy, § 812.

The reason why $\cos^2\theta - \frac{1}{3}$ should be expressible in this form is given below, but the verification can be made in the manner just indicated. It may be noted that because of the symmetry in (135), (138) must be symmetric in p_1, p_2, p_3 and m_1, m_2, m_3.

The reason why

$$\rho^2\left(\frac{3\cos\theta^2-1}{2}\right) \tag{139}$$

should be expressible in the terms of

$$x^2-y^2,\quad xy,\quad xz,\quad yz,\quad x^2+y^2-2z^2, \tag{140}$$

$$\rho^2(p_1^2-p_2^2),\quad \rho^2p_1p_2,\quad \rho^2p_1p_3,\quad \rho^2p_2p_3,\quad \rho^3(p_1^2+p_2^2-2p_3^2). \tag{141}$$

Since by (99), (100),

$$\rho\cos\theta = m_1x + m_2y + m_3z, \tag{142}$$

and since

$$\rho^2 = x^2+y^2+z^2, \tag{143}$$

$\rho^2(3\cos^2\theta - 1)$ must be a (rational, integral) homogeneous function in x, y, z of the second order.

The property possessed by the functions (140) is that they (and so any function of them of the form $A_0(x^2-y^2) + B_0xy + C_0xz + D_0yz + E_0(x^2+y^2-2z^2)$, the coefficients being any constants) satisfy Laplace's equation

$$\frac{\partial^2F}{\partial x^2} + \frac{\partial^2F}{\partial y^2} + \frac{\partial^2F}{\partial z^2} = 0 \tag{144}$$

where F stands for any one of the quantities x^2-y^2, etc., or any combination of them of the kind just given. Other homogeneous functions analogous to (140), such as

$$x^2-z^2,\quad y^2-z^2,\quad x^2+z^2-2y^2,\quad y^2+6yz-z^2,$$

which are made up from (140) by using suitable coefficients A_0, B_0, etc., are not independent solutions of (144) if (140) be regarded as such.

It can be shown that if

$$\phi=\rho^2\left(\frac{3\cos^2\theta-1}{2}\right) \text{ or } \rho^2P_2\text{; or, more generally, } \rho^nP_n\text{;} \tag{145}$$

then

$$\rho\frac{\partial^2(\rho\phi)}{\partial\rho^2}+\frac{1}{\sin\theta}\frac{\partial}{\partial\theta}\left(\sin\theta\frac{\partial\phi}{\partial\theta}\right)=0.* \tag{146}$$

But this equation is a particular form of

$$\frac{\partial^2\phi}{\partial x^2}+\frac{\partial^2\phi}{\partial y^2}+\frac{\partial^2\phi}{\partial z^2}=0, \tag{147}$$

so that any solution of (146) is also a solution of (144). Since ϕ or $\rho^2\left(\frac{3\cos^2\theta-1}{2}\right)$ is a solution of (146) and, as has just been shown, is a homogeneous function in x, y, z of the second order, ϕ must be some form of F.

In like manner it can be shown that because $\rho^3(\frac{5}{2}\cos^3\theta - \frac{3}{2}\cos\theta)$ satisfies (146) and is a homogeneous function in x, y, z of the third order, it must satisfy (144).

33. *To show that, by the equilibrium theory, the attraction of the moon produces spherical harmonic deformations of the ocean and also that such deformations are consistent with the equation of continuity.*

* Easily proved by direct substitution in (146) for any particular case required in tidal work. For the general proof, see Ferrers, Spherical Harmonics, pp. 4–10.

Since the tide-producing potential represents work, viz., the force of terrestrial gravity multiplied by the height of the tide, the height at various places must be the tide-producing potential divided by g. But g may be regarded as constant, and so the height of the tide will be proportional to V, and so a spherical harmonic deformation.

Suppose everything stationary, and let ρ denote the radius rector of the free surface of the sea; the earth will assume the form of a solid of revolution whose equation is

$$\rho = a + c\left[\frac{\rho^2}{r^3}\left(\frac{3\cos^2\theta - 1}{2}\right) + \frac{\rho^3}{r^4}\left(\frac{5\cos^3\theta - 3\cos\theta}{2}\right) + \ \ldots\right], \tag{148}$$

or

$$\rho = a + c_2\rho^2\frac{3\cos^2\theta - 1}{2} + c_3\rho^3\frac{5\cos^3\theta - 3\cos\theta}{2}, \tag{149}$$

where c_1, c_2, c_3 are small quantities.

But this value of ρ satisfies (146), showing, as will be noted in § 35, that the equation of continuity is satisfied, or that no volume is lost or gained by the deformation. That is, the volume generated by revolving the curve

$$\rho = a + c_2\rho^2\frac{3\cos^2\theta - 1}{2}, \tag{150}$$

or

$$\rho = a + c_3\rho^3\frac{5\cos^3\theta - 3\cos\theta}{2}, \tag{151}$$

or

$$\rho = a + c_2\rho^2\frac{3\cos^2\theta - 1}{2} + c_3\rho^3\frac{5\cos^3\theta - 3\cos\theta}{2}, \tag{152}$$

about the x-axis* is equivalent to the volume of the undisturbed sphere of radius a. This may be shown independently and as follows:

In the first instance, since ρ is nearly equal to a, $\rho = \sqrt{x^2 + y^2} = a + c_2(\frac{3}{2}x^2 - \frac{1}{2}a^2)$;

$$\therefore\ x^2 + y^2 = a^2 + ac_2(3x^2 - a^2), \tag{153}$$

or

$$\frac{x^2}{a^2(1 + 2ac_2)} + \frac{y^2}{a^2(1 - ac_2)} = 1. \tag{154}$$

The volume of the ellipsoid generated by revolving this ellipse is

$$\tfrac{4}{3}\pi a^3\sqrt{1 + 2ac_2}\sqrt{1 - ac_2}\sqrt{1 - ac_2},$$

$$= \tfrac{4}{3}\pi a^3, \text{ neglecting terms in } c_2^2. \tag{155}$$

In the second instance we have

$$x^2 + y^2 = a^2 + ac_3(5x^3 - 3a^2x). \tag{156}$$

The required volume is

$$\pi\int y^2 dx \tag{157}$$

taken between the limits

$$\begin{aligned} x &= a + a^3c_3, \\ x &= -a + a^3c_3. \end{aligned} \tag{158}$$

This is, neglecting terms in c_3^2,

$$\tfrac{4}{3}\pi a^3.$$

* In this and the next paragraph, the coördinate axes are taken with reference to the instantaneous spheroid, the x-axis passing through the disturbing body, and are not fixed in the earth as is usually the case.

34. *Further illustration.*

A *surface of equilibrium* or a *level surface* is one which has the same potential at all its points. Supposing the earth to be a sphere without rotation, and the moon divided as in § 30; any surface of equilibrium has for its equation

$$\frac{\mu E}{\rho} + \tfrac{1}{2}\,\mu M\left[\frac{1}{D'} + \frac{1}{D}\right] = \text{constant},^* \tag{159}$$

E denoting the earth's mass. Because the water of the sea is incompressible and because the action of the moon is symmetric about a line joining the centers of earth and moon, the surface whose equation is (159) must cut a perfect or undisturbed sphere in two small circles whose planes are perpendicular to the line joining the centers. Let $\alpha =$ the radius vector of the surface (159) at these small circles, = the mean radius of the undisturbed sphere. If now we write

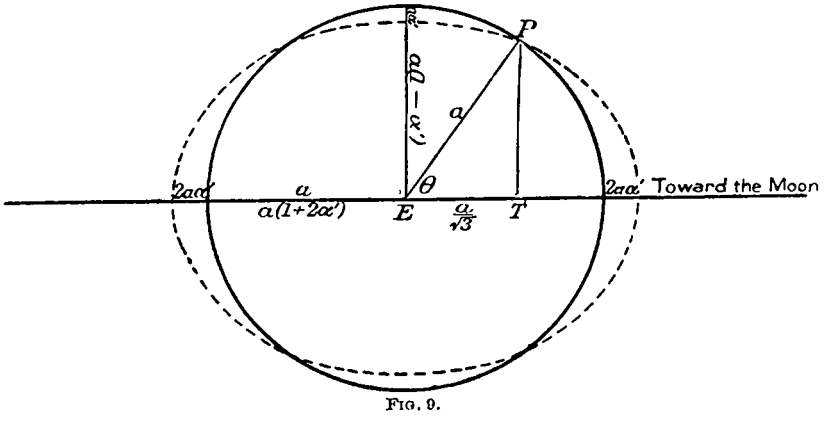

FIG. 9.

$$\rho = a\,(1 + u), \tag{160}$$

au is a very small quantity in comparison with a and represents the variation of ρ from a constant value a. Since (159) is true for all possible values of ρ, it is true when $\rho = a$ or $u = 0$. Developing (159) and putting $\rho = a$ we have, as in (115),

$$\frac{\mu E}{a} + \frac{\mu M}{r}\left[P_0 + P_2\frac{a^2}{r^2} + P_4\frac{a^4}{r^4} + \quad . \quad . \quad . \quad\right] = \text{constant}. \tag{161}$$

Now $2\,P_2 = 3\cos^2\theta - 1$, $\therefore$ if we make $\cos\theta = \frac{1}{\sqrt{3}}$, $P_2 = 0$. Hence, if we omit all terms beyond $P_2\frac{a^2}{r^2}$ in the brackets as being comparatively small, (161) becomes

$$\frac{\mu E}{a} + \frac{\mu M}{r} = \text{constant}. \tag{162}$$

Writing this value for the constant and putting $\rho = a\,(1 + u)$, equation (159) gives upon development

$$\frac{E}{a}(1 - u + u^2 - \quad . \quad . \quad . \quad) + \frac{M}{r}\left[P_0 + P_2\frac{a^2(1+u)^2}{r^2} + \quad . \quad . \quad . \quad\right] = \frac{E}{a} + \frac{M}{r}. \tag{163}$$

Omitting the second and higher powers of u as being very small, we have from (163)

$$u = \frac{M}{E}\frac{a^3}{r^3}P_2, = 2\,\alpha' P_2 = \alpha'(3\cos^2\theta - 1), \text{ say}. \tag{164}$$

When

$$\theta = 0,\ u = \frac{M}{E}\frac{a^3}{r^3} = 2\,\alpha';$$

---

*See Thomson and Tait, Natural Philosophy, §§ 800, 804.

Taking into account the earth's axial rotation, the potential of the centrifugal force is $\frac{1}{2}\,\omega^2 d^2$ where ω is put temporarily for angular velocity and d for the distance of any point from the axis. This should be added to the left side of (159).

when (165)

$$\theta = 90°,\ u = -\tfrac{1}{2}\frac{M}{E}\frac{a^3}{r^3} = -\alpha'.$$

Now au represents the inequality in the radius vector of the surface of equilibrium. If the surface be an ellipsoid of revolution, the section made by a plane passing through the centers of the earth and moon must be an ellipse having semiaxes $a(1+2\alpha')$ and $a(1-\alpha')$, respectively.

For the lunar tide, $a\alpha' = 0.59$ feet; for the solar, 0.27 feet. The equation of such an ellipse is

$$\frac{x^2}{a^2(1+2\alpha')^2} + \frac{y^2}{a^2(1-\alpha')^2} = 1. \tag{166}$$

Now write

$$\begin{aligned} x &= \rho\cos\theta, \\ y &= \rho\sin\theta, \\ \rho &= a\,(1+u), \end{aligned} \tag{167}$$

and (166) becomes

$$\frac{(1+u)^2\cos^2\theta}{(1+2\alpha')^2} + \frac{(1+u)^2\sin^2\theta}{(1-\alpha')^2} = 1; \tag{168}$$

$$\therefore u = \alpha'(3\cos^2\theta - 1), \tag{169}$$

which agrees with (164), and shows that the variation in ρ is such that the section made by the plane passing through the centers of the earth and moon is an ellipse.

To show that the condition of continuity is fulfilled, that is, that no volume has been lost or gained by the deforming action of the moon, it is only necessary to remember that the volume of the ellipsoid is

$$\begin{aligned} &\tfrac{4}{3}\pi a^3(1+2\alpha')(1-\alpha')(1-\alpha'), \\ &= \tfrac{4}{3}\pi a^3(1+0\,\alpha' - 3\,\alpha'^2 + \ \ldots\ ); \\ &= \tfrac{4}{3}\pi a^3 \end{aligned} \tag{170}$$

when α' is so small that all powers beyond the first may be neglected. But this is the volume of a sphere whose radius is a.

In obtaining (163), $\cos\theta$ was arbitrarily put equal to $\frac{1}{\sqrt{3}}$ in order that P_2 might be equal to zero. The reason for this is that for some value of θ we know that the tide-producing potential must be zero; and to the degree of approximation here assumed, this potential is

$$\frac{\mu M \rho^2}{r^3} P_2. \tag{171}$$

35. *Given the displacement of sea level, to show that the displacement potential is of the same form as the tide-producing potential and satisfies the equation of continuity.*

We have seen that the displacement of the sea level in a vertical direction, i. e., along a radius of the earth, is

$$a\alpha'(3\cos^2\theta - 1), \tag{172}$$

or

$$\rho\alpha'(3\cos^2\theta - 1), \tag{173}$$

since a and ρ are sensibly equal. The volume of water moved in any small displacement of a level surface is its thickness multiplied by its horizontal area; that is, in the case under consideration,

$$\rho\alpha'(3\cos^2\theta - 1)\,dS, \tag{174}$$

where dS represents the area of an elementary portion of the surface. The entire amount of outward and inward displacement must be equal to zero, since the volume inclosed by the level surface remains unaltered.

$$\therefore \iint \rho\alpha' (3\cos^2\theta - 1)\, dS = 0. \tag{175}$$

The *displacement potential** is such a function of the coördinates that the differential coefficient with respect to a coördinate represents the displacement along that coördinate. Denoting this function by ϕ, it must be such a function of the coördinates that

$$\frac{\partial\phi}{\partial\rho} = \text{displacement along radius.} \tag{176}$$

In this case we have

$$\frac{\partial\phi}{\partial\rho} = \rho\alpha' (3\cos^2\theta - 1), \tag{177}$$

$$\therefore \phi = \frac{\rho^2}{2}\alpha' (3\cos^2\theta - 1), = \rho^2\alpha' P_2, \tag{178}$$

to which any constant may be added. Thus it is seen that ϕ satisfies (147).

In general, letting n denote the normal to the surface S,

$$\iint \frac{\partial\phi}{\partial n} dS = 0, \tag{179}$$

when the integration extends over the entire closed surface S; that is, there is as much outward as inward displacement when the volume inclosed by S remains unaltered.

To show that (179) is satisfied, first determine an expression for dS. The element of surface generated by revolving the short line of length $\rho\, d\,\theta$ about the x-axis is equal to

$$\rho^2 \sin\theta\, d\,\theta, = dS. \tag{180}$$

The question is, Is

$$\iint \frac{\delta\phi}{\delta\rho}\, dS = 0 \tag{181}$$

when the integral is taken over S? This integral becomes

$$2\,\rho^3\alpha' \int_0^\pi \sin\theta\,(3\cos^2\theta - 1)\, d\theta,$$

$$= 2\rho^3\alpha' \left[2\int_0^\pi \sin\theta\, d\theta - 3\int_0^\pi \sin^3\theta\, d\theta \right], \tag{182}$$

$$= 2\,\rho^3\alpha' \Big[-2\cos\theta \Big]_0^\pi - 2\,\rho^3\alpha' \Big[\tfrac{1}{4}\cos 3\,\theta - \tfrac{9}{4}\cos\theta \Big]_0^\pi = 0, \tag{183}$$

as might have been inferred from the fact that ϕ satisfied (147). (147) is another form of the equation of continuity, as can be shown by considering a small displacement of an elementary volume.

The higher spherical harmonic deformations admit of similar treatment.

36. *Alteration in the tide-producing potential, and so in the height of the tide, caused by the mutual attraction between the fluid particles constituting the tide wave.*

The figures of the heavenly bodies depend on the law of gravity at their surfaces, and as this gravity is the resultant of the attraction of all their particles, it must also depend on their figures; therefore the law of gravity, at the surfaces of the heavenly bodies, and their figures, have a mutual connexion, which renders the knowledge of the one necessary for the determination of the other. In consequence of this, the investigation becomes very difficult, and it seems to require an analysis specially adapted to the subject.—(Laplace, Book III.)

* See Ibbetson, Mathematical Theory of Elasticity, p. 57.

So far in this chapter, the mutual attraction of the water particles has been disregarded in the tide-producing potential. Practically nothing is lost by so proceeding, because the continents and the inertia of the water do not permit the tide to assume a spherical harmonic deformation. A complete statement of the equilibrium hypothesis requires this source of disturbance to be noticed, and to that end an application of the special analysis referred to by Laplace will be given. It may be here noted that Newton took account of the mutual attraction of the particles in his theory of the figure of the earth, and in his tidal theory derived therefrom.*

A spherical harmonic distribution of density of attracting matter or, what amounts to the same thing, a thin attracting layer of corresponding thickness, on a spherical surface, produces a similar and similarly placed spherical harmonic distribution of potential over any concentric spherical surface throughout space, external and internal.

Let us ascertain the potential of such a spherical surface at points along the axis of symmetry for the distribution (or thickness), taking the center of the sphere as origin; then by replacing the distance on the axis from the origin by ρ, the distance of any point in space from the origin, and multiplying each term of the developed potential by a surface harmonic of the proper order, the resulting expression of the potential is true for points whether upon the axis or not.

For an internal point we know that the equation (147), often written $\nabla^2 V=0$, must be satisfied because (see § 32) any term of the form $\rho^n P_n$ is a solution; consequently an expression involving the sum of such terms must be a solution; and it is the required solution because when $\theta = 0$ it reduces to the expression known to be true along the axis.

The expression applying to external points is a solution of $\nabla^2 V = 0$ whose terms are of the form $\frac{1}{\rho^{n+1}} P_n$.†

Denoting the equilibrium height of the tide by

$$\tfrac{2}{3}\, a\, \mathfrak{x}\, P_2, \tag{184}$$

the density of the water by σ, then the mass of tidal water in a zone whose width is $a\, d\theta$ is evidently

$$\tfrac{4}{3}\, a^3\, \mathfrak{x}\, \pi\, \sigma \sin\theta\, P_2\, d\,\theta. \tag{185}$$

The distance from this zone to a point in the axis distant z from the origin is

$$\left(\overline{z-a\cos\theta}^2+\overline{a\sin\theta}^2\right)^{\frac{1}{2}},$$

or

$$(z^2-2\,az\cos\theta+a^2)^{\frac{1}{2}}. \tag{186}$$

Writing temporarily μ' for $\cos\theta$, the quotient of (185) by (186), i. e., the gravitational potential due to the elementary zone, becomes

$$-\tfrac{4}{3}\frac{a^3\,\mathfrak{x}\,\pi\,\sigma\,P_2\,d\,\mu'}{(z^2-2\,az\,\mu+a^2)^{\frac{1}{2}}}\ddagger, \tag{187}$$

$$=-\tfrac{4}{3}\frac{a^3\,\mathfrak{x}\,\pi\,\sigma\,P_2}{z}\left(P_0+P_1\frac{a}{z}+P_2\frac{a^2}{z^2}+\ \ .\ .\ .\ \right)d\,\mu' \tag{188}$$

for an external point on the axis, or

$$-\tfrac{4}{3}\,a^2\,\mathfrak{x}\,\pi\,\sigma\,P_2\left(P_0+P_1\frac{z}{a}+P_2\frac{z^2}{a^2}+\ \ .\ .\ .\ \right)d\,\mu' \tag{189}$$

* Principia, Bk. I, Prop. 91; Bk. III, Props. 19, 36, and 37.

† Ferrers, Spherical Harmonics, pp. 1, 2.

‡ The quantity μ of § 29 does not, of course, enter into the expression for $\mathfrak{x}$, and so is in this paragraph taken as unity. It may be explicitly introduced as a factor into (192) and (194).

for an internal point. Integrating (188) between the limits $\mu'=+1$ and $\mu'=-1$, we have, since

$$\int_{+1}^{-1} P_n P_m \, d\mu' = 0 \tag{190}$$

provided n and m are unequal positive integers, and since

$$\int_{+1}^{-1} P_n^2 \, d\mu' = -\frac{2}{2n+1},^* \tag{191}$$

$$\tfrac{4}{3}\cdot\tfrac{2}{5}\, a^5 \frac{\mathfrak{e}\,\pi\,\sigma}{z^3}. \tag{192}$$

Now, taking any external point, replace z by ρ, its distance from the origin, and multiply by P_2. Thus we obtain for the potential of the spherical shell

$$\tfrac{8}{15}\,\frac{a^5\,\mathfrak{e}\,\pi\,\sigma}{\rho^3}\,P_2. \tag{193}$$

Similarly for the higher harmonic deformations of water. This, added to the tide-producing potential of the moon gives for the entire tide-producing potential, to terms of the third order in $1/r$,

$$\frac{M\,\rho^2\,P_2}{r^3} + \tfrac{8}{15}\,\frac{a^5}{\rho^3}\,\mathfrak{e}\,\pi\,\sigma\,P_2. \tag{194}$$

This must be equal to $g\,\tfrac{2}{3}\,a\,\mathfrak{e}\,P_2$ or the work accomplished in elevating the water;

$$\therefore \text{ putting } \rho = a$$

$$\mathfrak{e} = \tfrac{3}{2}\,\frac{a}{r^3}\,\frac{M}{g\left(1-\tfrac{8}{15}\cdot\tfrac{3}{2}\,\dfrac{\pi\,a\,\sigma}{g}\right)}. \tag{195}$$

But

$$g = \frac{E}{a^2} = \tfrac{4}{3}\,\pi\,a\,\delta_e \tag{196}$$

since $E = \tfrac{4}{3}\,\pi\,a^3\delta_e$, δ_e being the density of the earth,

$$\therefore \mathfrak{e} = \tfrac{3}{2}\,\frac{Ma}{r^3 g}\,\frac{1}{1-\tfrac{3}{5}\,\sigma\,\delta_e},$$

$$= \tfrac{3}{2}\,\frac{M\,a^3}{E\,r^3}\,\frac{1}{1-\tfrac{3}{5}\,\sigma/\delta_e}. \tag{197}$$

$\therefore$ The equilibrium height of tide, or

$$\tfrac{2}{3}\,a\,\mathfrak{e}\,P_2, = \frac{M}{E}\,\frac{a^3}{r^3}\,\frac{1}{1-\tfrac{3}{5}\,\sigma/\delta_e}\,P_2. \tag{198}$$

When the density of the fluid (σ) is zero, the equilibrium height of tide or the tide-producing potentials is that found in the preceding paragraphs, or Euler's result. When δ_e is taken equal to σ, the equilibrium height is $\tfrac{5}{2}$ times as great, or Newton's result. As a matter of fact σ/δ_e is only about 2/11, and so the equilibrium tide would not be greatly increased because of this mutual attraction.† For $\sigma=0$, range of semidiurnal tide at the equator $= a\,\mathfrak{e} = H = 3\,a\alpha'$, §§ 41, 47, Part I.

* Ferrers, Spherical Harmonics, p. 17.

† Cf. Thomson and Tait, Natural Philosophy, §§ 815–817. Harkness, Solar Parallax, p. 139, makes $\delta_e/\sigma = 5{\cdot}576 \pm 0{\cdot}016$.

CHAPTER IV.

DEVELOPMENT OF THE TIDE-PRODUCING POTENTIAL.

37. The tide-producing potential of the moon at any given point depends upon the geographic position of the point and upon the particular time chosen. Of course the direction and distance of the moon enter into the value of this potential, but they are both functions of the time. Consequently the expression of this potential should be in terms of the coördinates of the influenced point and functions of time. Moreover, since the tide-producing causes are periodic in their character, the time functions should be simple harmonic functions; that is, functions consisting of terms of the form $A \cos(at + \alpha)$ or $A \sin(at + \alpha)$ where A, a, and α are constant, while t, the time, varies uniformly.

If c denote the moon's mean distance (i. e., the semiaxis major of the orbit), and e the eccentricity of the orbit, the latus rectum has for its value $c(1 - e^2)$. If $\varpi_,$ denote the longitude of the perigee from the intersection of the orbit with the plane of the equator and l the longitude of the moon from the same origin, both reckoned in the plane of the orbit, $l - \varpi_,$ is the moon's true anomaly. The polar equation of the ellipse representing the orbit, taking the origin at the focus, is

$$\frac{c(1-e^2)}{r} = 1 + e\cos(l - \varpi_,). \tag{199}$$

Since the most important part of the tide-producing potential V, § 29, depends upon the third power of $\frac{1}{r}$, we cube both members of this equation and obtain

$$\left[\frac{c(1-e^2)}{r}\right]^3 = 1 + 3e\cos(l-\varpi_,) + 3e^2\cos^2(l-\varpi_,) + e^3\cos^3(l-\varpi_,) + \ldots,$$

$$= 1 + 3e\cos(l-\varpi_,) + 3e^2\frac{\cos 2(l-\varpi_,)}{2} + \ldots, \tag{200}$$

where terms having the factor e^3 are omitted.

If $\sigma_,$ denote the moon's mean longitude measured in her orbit from the intersection, and $\varpi_,$ the mean, as well as the true, longitude of the perigee measured in the same way, the mean anomaly will be $\sigma_, - \varpi_,$. The solution of Kepler's problem, § 23, gives the equation

$$l = \sigma_, + 2e\sin(\sigma_, - \varpi_,) + \tfrac{5}{4}e^2\sin 2(\sigma_, - \varpi_,) + \ldots \tag{201}$$

This value of l substituted in (200) gives an expression for

$$\left[\frac{c(1-e^2)}{r}\right]^3 \tag{202}$$

in terms whose angles or arguments vary uniformly with the time.

The next step is to express $\cos^2\theta - \frac{1}{3}$ in functions whose angles vary uniformly with the time. Its value as given by (138) consists of functions of p_1, p_2, p_3 and m_1, m_2, m_3; but as p_1, p_2, p_3 depend only upon the position of the disturbed particle with respect to axes fixed in the earth, they do not involve the time. We have, then, to express the m-functions, or quantities proportional to them, by means of functions whose angles vary uniformly with the time.

Suppose the moon's orbit to be a fixed circle of the celestial sphere concentric with the earth; then its intersection with the celestial equator is a fixed point to which the rotation of the earth may be referred.* Let the z-axis be the one about which the earth rotates, carrying with it the x-axis and the y-axis which lie in the plane of the equator.

Let χ denote the right ascension of the extremity of the x-axis reckoned from the intersection.

Fig. 10 shows the appearance of the celestial sphere viewed from without. The meridional arcs xz, yz revolve in the direction indicated by the arrows. If M denote the position of the moon, her true longitude from I being l, then

$$\left.\begin{aligned} m_1 &= \cos Mx,\ m_2 = \cos My,\ m_3 = \cos Mz; \\ \therefore\ m_1 &= \cos l \cos \chi + \sin l \sin \chi \cos I, \\ m_2 &= -\cos l \sin \chi + \sin l \cos \chi \cos I, \\ m_3 &= \sin l \sin I. \end{aligned}\right\} \tag{203}$$

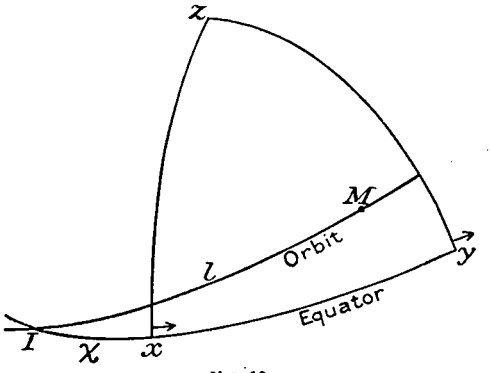

FIG. 10.

We may observe that m_2 is derivable from m_1 by putting $x + \frac{1}{2}\pi$ in place of x.

Now, for brevity, let

$$p = \cos \tfrac{1}{2} I,\ q = \sin \tfrac{1}{2} I; \tag{204}$$

then

$$\left.\begin{aligned} m_1 &= p^2 \cos (\chi - l) + q^2 \cos (\chi + l), \\ m_2 &= -p^2 \sin (\chi - l) - q^2 \sin (\chi + l), \\ m_3 &= 2pq \sin l. \end{aligned}\right\} \tag{205}$$

$$\therefore\ m_1^2 - m_2^2 = p^4 \cos 2(\chi - l) + 2p^2q^2 \cos 2\chi + q^4 \cos 2(\chi + l), \tag{206}$$

$$-2m_1 m_2 = \text{the same with sines in place of cosines}, \tag{207}$$

$$m_2 m_3 = -p^3q \cos (\chi - 2l) + pq(p^2 - q^2) \cos \chi + pq^3 \cos (\chi + 2l), \tag{208}$$

$$m_1 m_3 = \text{the same with sines in place of cosines}, \tag{209}$$

$$\tfrac{1}{3}(m_1^2 + m_2^2 - 2m_3^2) = \tfrac{1}{3} - m_3^2 = \tfrac{1}{3}(p^4 - 4p^2q^2 + q^4) + 2p^2q^2 \cos 2l. \tag{210}$$

If for l in these expressions we put its value given by (201), the m-functions, and so $\cos^2\theta - \frac{1}{3}$, will be expressed as functions of angles all of which vary uniformly with the time. Consequently we are now able to express in like manner the entire function, (121) or (133),

$$V = \tfrac{3}{2} \frac{\mu M}{r^3} \rho^2 (\cos^2\theta - \tfrac{1}{3}). \tag{211}$$

For convenience, put

$$X = \left[\frac{c(1-e^2)}{r}\right]^{\frac{3}{2}} m_1,\ Y = \left[\frac{c(1-e^2)}{r}\right]^{\frac{3}{2}} m_2,\ Z = \left[\frac{c(1-e^2)}{r}\right]^{\frac{3}{2}} m_3; \tag{212}$$

equations (138) and (211) then give

$$\left.\begin{aligned} V \div \tfrac{3}{2} \frac{\mu M}{c^3(1-e^2)^3} \rho^2 &= 2p_1 p_2 XY + 2\frac{p_1^2 - p_2^2}{2}\frac{X^2 - Y^2}{2} + 2p_2 p_3 YZ \\ &\quad + 2p_1 p_3 XZ + \tfrac{3}{2}\frac{p_1^2 + p_2^2 - 2p_3^2}{3}\frac{X^2 + Y^2 - 2Z^2}{3}. \end{aligned}\right\} \tag{213}$$

* The intersection is here supposed to move only as the equinox moves.

38. Before completely expressing the functions, X^2-Y^2 XY, etc., as simple harmonic functions of the time, it is of interest to examine the special case where the moon's orbit is assumed to be circular instead of elliptical. Since $e=0$, equation (201) gives $l=\sigma_,$;

$$\therefore X^2-Y^2=p^4\cos 2(\chi-\sigma_,)+2p^2q^2\cos 2\chi+q^4\cos 2(\chi+\sigma_,), \tag{214}$$

$$-2XY=p^4\sin 2(\chi-\sigma_,)+2p^2q^2\sin 2\chi+q^4\sin 2(\chi+\sigma_,), \tag{215}$$

$$YZ=-p^3q\cos(\chi-2\sigma_,)+pq(p^2-q^2)\cos\chi+pq^3\cos(\chi+2\sigma_,), \tag{216}$$

$$XZ=-p^3q\sin(\chi-2\sigma_,)+pq(p^2-q^2)\sin\chi+pq^3\sin(\chi+2\sigma_,), \tag{217}$$

$$\tfrac{1}{3}(X^2+Y^2-2Z^2)=\tfrac{1}{3}(p^4-4p^2q^2+q^4)+2p^2q^2\cos 2\sigma_,. \tag{218}$$

From this it appears that there are three classes of tidal causes, and so (§ 14) three classes of tides:*

Semidiurnal tides, period about one-half day.

Diurnal tides, period about one day.

A fortnightly tide, period one-half tropical month.

The constant term in (218) indicates a permanent change in sea level because of the existence of the moon.

From § 13, the hourly variation in χ is $\gamma=15{\cdot}0410686$, and in $\sigma_,$ it is $\sigma=0{\cdot}5490165$; consequently the component tides have for speeds the following values:

$$\begin{aligned}
2(\gamma-\sigma)&=28{\cdot}9841042=\mathrm{m}_2,\\
2\gamma&=30{\cdot}0821372=\mathrm{k}_2,\\
2(\gamma+\sigma)&=31{\cdot}1801702=\text{——}\\
\gamma-2\sigma&=13{\cdot}9430356=\mathrm{o}_1,\\
\gamma&=15{\cdot}0410686=\mathrm{k}_1,\\
\gamma+2\sigma&=16{\cdot}1391016=\mathrm{oo},\\
2\sigma&=1{\cdot}0980330=\mathrm{mf}.
\end{aligned} \tag{219}$$

The relative size of the components occurring in any particular X-Y-Z function can be roughly determined by putting $p=\cos\frac{1}{2}(23^\circ\,27'{\cdot}3)=0{\cdot}979$ and $q=\sin\frac{1}{2}(23^\circ\,27'{\cdot}3)=0{\cdot}203$. Upon inspecting YZ or XZ it is seen that the amplitude of O_1 is a trifle greater than that of lunar K_1.

39. A natural way for developing the function X^2-Y^2, say, is indicated here, the work being carried to terms in e^2:

$$X^2-Y^2=\frac{a^3(1-e^2)}{r^3}[p^4\cos 2(\chi-l)+2p^2q^2\cos 2\chi+q^4\cos 2(\chi+l)], \tag{220}$$

$$=[1+\tfrac{3}{2}e^2+3e\cos(l-\varpi)+\tfrac{3}{2}e^2\cos 2(l-\varpi_,)+\quad\ldots\quad]$$

$$\times[p^4\cos 2(\chi-l)+2p^2q^2\cos 2\chi+q^4\cos 2(\chi+l)]. \tag{221}$$

It is obvious that if l in this product be replaced by its value

$$l=\sigma_,+2e\sin(\sigma_,-\varpi_,)+\tfrac{5}{4}e^2\sin 2(\sigma_,-\varpi_,)+\quad\ldots\quad, \tag{222}$$

X^2-Y^2 will become expressed in terms involving only such angles as vary uniformly with the time. The actual development will show that the terms are all simple harmonic functions of the time. It may be remarked that all angles involved in the above product are of the form $y_1\pm l$, or $y_1\pm 2l$, y_1 having different values for different terms.

$$\therefore\cos(y_1\pm l)=\cos[y_1\pm\sigma_,\pm 2e\sin(\sigma_,-\varpi_,)+\tfrac{5}{4}e^2\sin 2(\sigma_,-\varpi_,)], \tag{223}$$

* Cf. Thomson and Tait, Natural Philosophy, § 808.

and similarly for $\cos(y_1 \pm 2l)$. Because e is small we can write

$$2e\sin(\sigma_1-\varpi_1)+\tfrac{5}{4}e^2\sin 2(\sigma_1-\varpi_1) \text{ for } \sin[2e\sin(\sigma_1-\varpi_1)+\tfrac{5}{4}e^2\sin 2(\sigma_1-\varpi_1)] \quad (224)$$

and

$$1-\frac{2^2e^2\sin^2(\sigma_1-\varpi_1)}{2} \text{ for } \cos[2e\sin(\sigma_1-\varpi_1)+\tfrac{5}{4}e^2\sin 2(\sigma_1-\varpi_1)]. \quad (225)$$

Upon following out the work indicated, and reducing by elementary trigonometry, the function X^2-Y^2 becomes expressed in a series of cosine terms, all angles varying uniformly with the time. From the expression for X^2-Y^2 analogous ones for $-2XY$, YZ, and XZ may be obtained.

Instead of the above, the following method, used by Darwin, is chosen because of certain symmetries which it puts in evidence:

The m-functions contain trigonometrical functions of the form $\sin(2l+\alpha)$ and $\cos(2l+\alpha)$ Let

$$R=\left[\frac{c(1-e^2)}{r}\right]^3,\quad \Phi(\alpha)=R\cos(2l+\alpha),\quad \Psi(\alpha)=R\cos\alpha; \quad (226)$$

then

$$X^2-Y^2=p^4\Phi(-2\chi)+2p^2q^2\Psi(2\chi)+q^4\Phi(2\chi), \quad (227)$$

$$2XY=p^4\Phi\left[-2\left(\chi+\frac{\pi}{4}\right)\right]+2p^2q^2\Psi\left[2\left(\chi+\frac{\pi}{4}\right)\right]+q^4\Phi\left[2\left(\chi+\frac{\pi}{4}\right)\right], \quad (228)$$

$$YZ=-p^3q\Phi(-\chi)+pq(p^2-q^2)\Psi(\chi)+pq^3\Phi(\chi), \quad (229)$$

$$XZ=-p^3q\Phi\left(-\chi+\frac{\pi}{2}\right)+pq(p^2-q^2)\Psi\left(\chi-\frac{\pi}{2}\right)+pq^3\Phi\left(\chi-\frac{\pi}{2}\right), \quad (230)$$

$$\tfrac{1}{3}(X^2+Y^2-2Z^2)=\tfrac{1}{3}(p^4-4p^2q^2+q^4)R+2p^3q^3\Phi(0, \quad (231)$$

$$\begin{aligned}\Phi(\alpha)=R\cos(2l+\alpha)&=(1+\tfrac{3}{2}e^2)\cos(2l+\alpha)\\&+\tfrac{3}{2}e[\cos(3l+\alpha-\varpi_1)+\cos(l+\alpha+\varpi_1)]\\&+\tfrac{3}{4}e^2[\cos(4l+\alpha-2\varpi_1)+\cos(\alpha+2\varpi_1)]\\&+\ \ldots,\end{aligned} \quad (232)$$

$$\begin{aligned}\Psi(\alpha)=R\cos\alpha&=(1+\tfrac{3}{2}e^2)\cos\alpha\\&+\tfrac{3}{2}e[\cos(l+\alpha-\varpi_1)+\cos(l-\alpha-\varpi_1)]\\&+\tfrac{9}{4}e^2[\cos(2l+\alpha-2\varpi_1)+\cos(2l-\alpha-2\varpi_1)]\\&+\ \ldots.\end{aligned} \quad (233)$$

Replacing l by its value, we obtain, after suitable reductions,

$$\begin{aligned}\Phi(\alpha)&=(1-\tfrac{11}{2}e^2)\cos(2\sigma_1+\alpha)-\tfrac{1}{2}e\cos(\sigma_1+\alpha+\varpi_1)\\&+\tfrac{7}{2}e\cos(3\sigma_1+\alpha-\varpi_1)+\tfrac{17}{2}e^2\cos(4\sigma_1+\alpha-2\varpi_1)\\&+\ \ldots,\end{aligned} \quad (234)$$

$$\Psi(\alpha)=(1-\tfrac{3}{2}e^2)\cos\alpha+\tfrac{3}{2}e[\cos(\sigma_1+\alpha-\varpi_1)+\cos(\sigma_1-\alpha-\varpi_1)]$$

$$+\tfrac{9}{4}e^2[\cos(2\sigma_1+\alpha-2\varpi_1)+\cos(2\sigma_1-\alpha-2\varpi_1)]+\ \ldots. \quad (235)$$

By § 37,

$$R=1-\tfrac{3}{2}e^2+3e\cos(\sigma_1-\varpi_1)+\tfrac{9}{2}e^2\cos 2(\sigma_1-\varpi_1)+\ \ldots. \quad (236)$$

By giving to α the values -2χ, $+2\chi$, etc., which occur in the expressions $X^2 - Y^2$, $2XY$, YZ, XZ, $\frac{1}{3}(X^2 + Y^2 - 2Z^2)$, their developed values are obtained as far as terms in e^2.

$$\begin{aligned} X^2 - Y^2 = {} & (1 - \tfrac{11}{2} e^2)\,[p^4 \cos 2(\chi - \sigma_,) + q^4 \cos 2(\chi + \sigma_,)] + (1 - \tfrac{3}{2} e^2)\, 2 p^2 q^2 \cos 2\chi \\ & + \tfrac{7}{2} e\,[p^4 \cos (2\chi - 3\sigma_, + \varpi_,) + q^4 \cos (2\chi + 3\sigma_, - \varpi_,)] \\ & - \tfrac{1}{2} e\,[p^4 \cos (2\chi - \sigma_, - \varpi_,) + q^4 \cos (2\chi + \sigma_, + \varpi_,)] \\ & + \tfrac{3}{2} e\, 2 p^2 q^2 [\cos (2\chi + \sigma_, - \varpi_,) + \cos (2\chi - \sigma_, + \varpi_,)] \\ & + \tfrac{17}{2} e^2\,[p^4 \cos (2\chi - 4\sigma_, + 2\varpi_,) + q^4 \cos (2\chi + 4\sigma_, - 2\varpi_,)] \\ & + \tfrac{9}{4} e^2\, 2 p^2 q^2 [\cos (2\chi + 2\sigma_, - 2\varpi_,) + \cos (2\chi - 2\sigma_, + 2\varpi_,)]. \end{aligned} \tag{237}$$

From (227) and (228) it may be inferred that the expression for $-2XY$ is deducible from that of $X^2 - Y^2$ by putting sine in the place of cosine. The same inference may be made otherwise. For, $-2 m_1 m_2 = -\frac{1}{2}\frac{d(m_1^2 - m_2^2)}{d\chi}$; and since R does not contain χ,

$$\begin{aligned} -\tfrac{1}{2}\frac{d(X^2 - Y^2)}{d\chi} &= -\tfrac{1}{2}\frac{d[R(m_1^2 - m_2^2)]}{d\chi} = -\tfrac{1}{2}\frac{R\,d(m_1^2 - m_2^2)}{d\chi} = -2 R m_1 m_2 \\ &= -2XY. \end{aligned} \tag{238}$$

But $X^2 - Y^2$ consists of cosine terms only; therefore $-2XY$ is the same expression with sines in the place of cosines. It will not be necessary to write out the expression for $-2XY$ because the coördinate axes will be so taken as to render zero the term of V which contains it. To obtain the expression for YZ from that of $X^2 - Y^2$, change 2χ into χ, p^4 into $-p^3 q$, $2p^2q^2$ into $pq(p^2 - q^2)$, and q^4 into pq^3. Because of the choice of axes, the term of V containing YZ will also disappear. The expression for XZ is obtained from that of YZ by writing sines in the place of cosines.

$$\begin{aligned} \therefore XZ = {} & -(1 - \tfrac{11}{2} e^2)\,[p^3 q \sin (\chi - 2\sigma_,) - pq^3 \sin (\chi + 2\sigma_,)] \\ & \qquad + (1 - \tfrac{3}{2} e^2)\, pq(p^2 - q^2) \sin \chi \\ & - \tfrac{7}{2} e\,[p^3 q \sin (\chi - 3\sigma_, + \varpi_,) - pq^3 \sin (\chi + 3\sigma_, - \varpi_,)] \\ & + \tfrac{1}{2} e\,[p^3 q \sin (\chi - \sigma_, - \varpi_,) - pq^3 \sin (\chi + \sigma_, + \varpi_,)] \\ & + \tfrac{3}{2} e\, pq(p^2 - q^2)\,[\sin (\chi + \sigma_, - \varpi_,) + \sin (\chi - \sigma_, + \varpi_,)] \\ & - \tfrac{17}{2} e^2\,[p^3 q \sin (\chi - 4\sigma_, + 2\varpi_,) - pq^3 \sin (\chi + 4\sigma_, - 2\varpi_,)] \\ & + \tfrac{9}{4} e^2\, pq(p^2 - q^2)\,[\sin (\chi + 2\sigma_, - 2\varpi_,) + \sin (\chi - 2\sigma_, + 2\varpi_,)]. \end{aligned} \tag{239}$$

Finally,

$$\begin{aligned} \tfrac{1}{3}(X^2 + Y^2 - 2Z^2) = {} & \tfrac{1}{3}(p^4 - 4p^2q^2 + q^4)\,[(1 - \tfrac{3}{2} e^2) + 3e \cos (\sigma_, - \varpi_,) + \tfrac{9}{2} e^2 \cos 2(\sigma_, - \varpi_,)] \\ & + 2 p^2 q^2 [(1 - \tfrac{11}{2} e^2) \cos 2\sigma_, + \tfrac{7}{2} e \cos (3\sigma_, - \varpi_,) - \tfrac{1}{2} e \cos (\sigma_, + \varpi_,) + \tfrac{17}{2} e^2 \cos (4\sigma_, - 2\varpi_,)]. \end{aligned} \tag{240}$$

These, then, are the required developments as far as terms in e^2.

40. The obliquity of the ecliptic is 23° 27′·3, and I oscillates between 5° 8′·8 greater and 5° 8′·8 less than that value. The value of q or $\sin \frac{1}{2} I$, when I is 23° 27′·3, is ·203, and its square is ·041, and its cube ·0084. The eccentricity of the lunar orbit e = ·0549; hence q^2 is a little smaller than e.

The preceding developments have been carried as far as e^2, principally on account of the terms involving $\frac{17}{2} e^2$, which, as e is about $\frac{1}{18}$, have nearly the same magnitude as if the coefficient had been $\frac{1}{2} e$.

It is proposed, then, to regard q^2 and q^3 as of the same order as e, and to drop all terms of the order e^2, except in the case where the numerical factor is large. This rule will be neglected with regard to one term for a special reason, which appears below; and for another, because the numerical coefficient is just sufficiently large to make it worth retaining.

Adopting this approximation, we may write (237), (239), (240), thus,—

$$X^2 - Y^2 = (1 - \tfrac{1}{4} e^2)\, p^4 \cos 2\,(\chi - \sigma_,) + (1 - \tfrac{3}{2} e^2)\, 2\, p^2 q^2 \cos 2\,\chi$$
$$+ \tfrac{1}{2}\, e\, p^4 \cos\,(2\,\chi - 3\,\sigma_, + \varpi_,)$$
$$- \tfrac{1}{2}\, e\, p^2\, [p^2 \cos\,(2\,\chi - \sigma_, - \varpi_,) - 6\, q^2 \cos\,(2\,\chi - \sigma_, + \varpi_,)]$$
$$+ \tfrac{1}{4}\, e^2\, p^4 \cos\,(2\,\chi - 4\,\sigma_, + 2\,\varpi_), \qquad (241)$$

$$X\,Z = -\,(1 - \tfrac{1}{4} e^2)\, [p^3\, q \sin\,(\chi - 2\,\sigma_,) - p\, q^3 \sin\,(\chi + 2\,\sigma_,)]$$
$$+ (1 - \tfrac{3}{4} e^2)\, p\, q\, (p^2 - q^2) \sin\,\chi - \tfrac{1}{2}\, e\, p^3\, q \sin\,(\chi - 3\,\sigma + \varpi_,)$$
$$+ \tfrac{1}{2}\, e\, p\, q\, [p^2 \sin\,(\chi - \sigma_, - \varpi_,) + 3\,(p^2 - q^2) \sin\,(\chi - \sigma_, + \varpi_,)]$$
$$+ \tfrac{3}{4}\, e\, p\, q\, (p^2 - q^2) \sin\,(\chi + \sigma - \varpi) - \tfrac{1}{4}\, e^2\, p^3\, q \sin\,(\chi - 4\,\sigma_, + 2\,\varpi_,), \qquad (242)$$

$$\tfrac{1}{8}\,(X^2 + Y^2 - 2\,Z^2) = \tfrac{1}{8}\,(p^4 - 4\,p^2\,q^2 + q^4)\, [(1 - \tfrac{3}{2} e^2) + 3\, e \cos\,(\sigma_, - \varpi_,)]$$
$$+ 2\, p^2 q^2\, [(1 - \tfrac{1}{2} e^2) \cos 2\,\sigma_, + \tfrac{1}{2}\, e \cos\,(3\,\sigma_, - \varpi_,)]. \qquad (243)$$

The terms which have been retained in violation of the rule of approximation are that in $X^2 - Y^2$ with argument $2\,\chi - \sigma_, + \varpi_,$, and that in $\frac{1}{8}\,(X^2 + Y^2 - 2\,Z^2)$ with argument $3\,\sigma_, - \varpi_,$.

The only other term which could have any importance is

$$\tfrac{3}{4}\, e\, 2\, p^2\, q^2 \cos\,(2\,\chi + \sigma_, - \varpi_,) \text{ in } X^2 - Y^2.^* \qquad (244)$$

Since the motion of the lunar perigee is slow, the two terms in $X^2 - Y^2$ whose arguments are $2\,\chi - \sigma_, - \varpi_,$ and $2\,\chi - \sigma_, + \varpi_,$ may be combined into one having a slowly varying amplitude and period. This is done by putting the bracketed portion of

$$-\,\tfrac{1}{2}\, e\, p^2\, [p^2 \cos\,(2\,\chi - \sigma_, - \varpi_,) - 6\, q^2 \cos\,(2\,\chi - \sigma_, + \varpi_,)] \qquad (245)$$

into the approximate form

$$p\, \sqrt{p^2 - 12\, q^2 \cos 2\,\varpi_,}\, \cos\,(2\,\chi - \sigma_, - \varpi_, - R) \qquad (246)$$

where

$$\tan R = \frac{\sin 2\,\varpi_,}{\frac{1}{6} \cot^2 \tfrac{1}{2} I - \cos 2\,\varpi_,}. \qquad (247)$$

Because

$$2\,\chi - \sigma_, + \varpi_, = (2\,\chi - \sigma_, - \varpi_,) + 2\,\varpi_,$$
$$p^2 \cos\,(2\,\chi - \sigma_, - \varpi_,) - 6\, q^2 \cos\,(2\,\chi - \sigma_, - \varpi_,) \qquad (248)$$

may be written

$$(p^2 - 6\, q^2 \cos 2\,\varpi_,) \cos\,(2\,\chi - \sigma_, - \varpi_,) + 6\, q^2 \sin 2\,\varpi_, \sin\,(2\,\chi - \sigma_, - \varpi_,). \qquad (249)$$

If we assume this equivalent to

$$p\, f' \cos\,(2\,\chi - \sigma_, - \varpi_, - R), \qquad (250)$$

then from comparison with expression (247),

$$\tan R = \frac{6\, q^2 \sin 2\,\varpi_,}{p^2 - 6\, q^2 \cos 2\,\varpi_,} = \frac{\sin 2\,\varpi_,}{\frac{1}{6} \cot^2 \tfrac{1}{2} I - \cos 2\,\varpi_,}, \qquad (251)$$

$$f'^2 = p^2 - 12\, q^2 \cos 2\,\varpi_, + 36\, \frac{q^4}{p^2}, \qquad (252)$$

$$f' = \sqrt{p^2 - 12\, q^2 \cos 2\,\varpi_,}, \text{ approximately.} \qquad (253)$$

* B. A. A. S. Report 1883, pp. 57, 58. Small type in the text generally implies direct quotation, as above.

The two terms thus combined may be written

$$-\tfrac{1}{2}\,ep^4\sqrt{1-12\tan^2\tfrac{1}{2}I\cos 2\varpi_,}\,\cos(2\chi-\sigma_,-\varpi_,-R); \tag{254}$$

that is, the term having $2\chi-\sigma_,+\varpi_,$ for argument simply produces a slow variation in the amplitude and period of the predominating one whose argument is $2\chi-\sigma_,-\varpi_,$. Since $\frac{1}{2}I$ is always less than 15°, the denominator of tan R is always positive and so R must always lie in the first or fourth quadrant.

In XZ occur the terms

$$\tfrac{1}{2}epq\,[p^2\sin(\chi-\sigma_,-\varpi_,)+3(p^2-q^2)\sin(\chi-\sigma_,+\varpi_,)]. \tag{255}$$

These might be combined into one having $\chi-\sigma_,+\varpi_,$ as argument, and whose amplitude and period would be subject to slow variations. But as either argument is nearly equal to $\chi-\sigma_,$, it is convenient, as will afterwards appear, to suppose a component of argument $\chi-\sigma_,$ having a slowly varying amplitude and period. We are to transform the expression

$$4\cos\varpi_,\sin(\chi-\sigma_,)+2\sin\varpi_,\cos(\chi-\sigma_,) \tag{256}$$

into the form

$$f''\sin(\chi-\sigma_,+Q). \tag{257}$$

Comparing this with (256), we have

$$\tan Q=\tfrac{1}{2}\tan\varpi_, \tag{258}$$

$$f''^2=16-12\sin^2\varpi_, \tag{259}$$

$$f''=2\sqrt{\tfrac{5}{2}+\tfrac{3}{2}\cos 2\varpi_,}. \tag{260}$$

Consequently the two terms become

$$ep^3q\,\sqrt{\tfrac{5}{2}+\tfrac{3}{2}\cos 2\varpi_,}\,\sin(\chi-\sigma_,+Q) \tag{261}$$

where

$$\tan Q=\tfrac{1}{2}\tan\varpi_,.$$

Since tan Q passes through zero or infinity with $\frac{1}{2}\tan\varpi_,$, Q must always lie in the same quadrant as $\varpi_,$.

The object of the transformations (254), (261), which may seem theoretically undesirable, is as follows:—

The numerical harmonic analysis of the tides is made to extend over one year, and this period is not long enough to distinguish completely a tide whose argument is $2\chi-\sigma_,-\varpi_,$, from one whose argument is $2\chi-\sigma_,+\varpi_,$, nor one whose argument is $\chi-\sigma_,-\varpi_,$, from one whose argument is $\chi-\sigma_,+\varpi_,$. In fact, the tide with argument $2\chi-\sigma_1+\varpi_,$ (for which no analysis has been as yet carried out) will only produce an irregularity in that of argument $2\chi-\sigma_,-\varpi_,$, called the smaller elliptic semidiurnal tide; such irregularity has in fact been noted, but no explanation has previously been given of it.

Again, the pair of terms with arguments $\chi-\sigma_,\pm\varpi_,$ will appear in the harmonic analysis with the single argument $\chi-\sigma_,$, and the resulting numbers will necessarily appear very irregular, unless compared with the theoretical expression (261).

41. *The evection and variation.*

To the first power of e, the inequality in the moon's longitude due to evection is represented by

$$\theta=s+\tfrac{15}{4}me\sin(s-2h+p^*),\dagger \tag{262}$$

and in radius vector

$$\frac{a(1-e^2)}{r}=1+\tfrac{15}{8}me\cos(s-2h+p^*), \tag{263}$$

where θ is put for the moon's longitude in the ecliptic, and m for the ratio of the sun's to the moon's mean angular motion.

---

*p, denoting mean longitude, will be marked for the present with an asterisk.

†See Godfray, An Elementary Treatise on the Lunar Theory, §§ 71, 92. For more accurate values of the coefficients of sin $(s-2h+p^*)$ and cos $(s-2h+p^*)$, see Hansen, Tables de la Lune, § 1.

If we neglect the distinction between longitudes in the orbit and in the ecliptic [which is in effect neglecting a term with coefficient $\sin^2(\frac{1}{2} \times 5^\circ 9')$], we have from (262),

$$l = \sigma_1 + \tfrac{15}{4} me \sin(s - 2h + p^*); \tag{264}$$

whence

$$\cos(2l + \alpha) = \cos(2\sigma_1 + \alpha) + \tfrac{15}{4} me\,[\cos(2\sigma_1 + s - 2h + p^* + \alpha) - \cos(2\sigma_1 - s + 2h - p^* + \alpha)]. \tag{265}$$

And from (263) and the definitions of R, Ψ, Φ in (226),

$$R = \left[\frac{a(1-e^2)}{r}\right]^3 = 1 + \tfrac{45}{8} me \cos(s - 2h + p^*), \tag{266}$$

$$\Psi(\alpha) = \cos\alpha + \tfrac{15}{16} me\,[\cos(s - 2h + p^* + \alpha) + \cos(s - 2h + p^* - \alpha), \tag{267}$$

$$\Phi(\alpha) = \cos(2\sigma_1 + \alpha) + \tfrac{105}{16} me \cos(2\sigma_1 + s - 2h + p^* + \alpha) - \tfrac{15}{16} me \cos(2\sigma_1 - s + 2h - p^* + \alpha). \tag{268}$$

Then substituting from (266), (267), (268) in (227)-(231), and dropping the terms which are merely a reproduction of those already obtained, and neglecting terms in q^2 and q^3, we have

$$X^2 - Y^2 = \tfrac{105}{16} mep^4 \cos(2\chi - 2\sigma_1 - s + 2h - p^*) - \tfrac{15}{16} mep^4 \cos(2\chi - 2\sigma_1 + s - 2h + p^*), \tag{269}$$

$$XZ = -\tfrac{105}{16} mep^3 q \sin(\chi - 2\sigma_1 - s + 2h - p^*) + \tfrac{15}{16} mep^3 q \sin(\chi - 2\sigma_1 + s - 2h + p^*)$$
$$+ \tfrac{45}{16} mepq(p^2 - q^2)\,[\sin(\chi + s - 2h + p^*) + \sin(\chi - s + 2h - p^*)], \tag{270}$$

$$\tfrac{1}{3}(X^2 + Y^2 - 2Z^2) = \tfrac{1}{3}(p^4 - 4p^2q^2 + q^4)\tfrac{45}{8} me \cos(s - 2h + p^*). \tag{271}$$

It must be noticed that $\frac{105}{16} me$ arises by the addition of the coefficient of the Evection in longitude to three halves of that in the reciprocal of the radius vector; that $\frac{15}{16} me$ is the difference of the same two quantities; and that $\frac{45}{8} me$ is three times the coefficient in the reciprocal of radius vector. When the development of the lunar theory is carried to higher orders these coefficients differ considerably from the amounts computed from the first term, which alone occurs in the above analysis. Hence, when these coefficients are computed, the full values of the coefficients in longitude and reciprocal of radius vector must be introduced. According to Professor Adams, the full values of the coefficients are, in longitude ·022233, and in c/r ·010022.

The ratio of the mean motions m is about $\frac{1}{13}$, and is therefore a little greater than e, hence me is somewhat greater than e^2. Thus we may abridge (269)-(271), and write the expression thus:—

$$X^2 - Y^2 = \tfrac{105}{16} mep^4 \cos(2\chi - 2\sigma_1 - s + 2h - p^*) - \tfrac{15}{16} mep^4 \cos(2\chi - 2\sigma_1 + s - 2h + p^*), \tag{272}$$

$$XZ = -\tfrac{105}{16} mep^3 q \sin(\chi - 2\sigma_1 - s + 2h - p^*), \tag{273}$$

$$\tfrac{1}{3}(X^2 + Y^2 - 2Z^2) = \tfrac{1}{3}(p^4 - 4p^2q^2 + q^4)\tfrac{45}{8} me \cos(s - 2h + p^*). \tag{274}$$

The equations (272)-(274) contain the terms to be added to (241)-(243) on account of the Evection.

The Variation.

Treating this inequality in the same way as the Evection, we have

$$l = \sigma_1 + \tfrac{11}{8} m^2 \sin 2(s - h), \tag{275}$$

$$\frac{a(1-e^2)}{r} = 1 + m^2 \cos 2(s - h), \tag{276}$$

$$R = 1 + 3m^2 \cos 2(s - h), \tag{277}$$

$$\psi(\alpha) = \cos\alpha + \tfrac{3}{2} m^2\,[\cos(2(s - h) + \alpha) + \cos(2(s - h) - \alpha)], \tag{278}$$

$$\phi(\alpha) = \cos(2\sigma_1 + \alpha) + \tfrac{21}{8} m^2 \cos(2\sigma_1 + 2s - 2h + \alpha) + \tfrac{1}{8} m^2 \cos(2\sigma_1 - 2s + 2h + \alpha). \tag{279}$$

Whence we have to a sufficient degree of approximation,

$$X^2 - Y^2 = \tfrac{21}{8} m^2 p^4 \cos(2\chi - 2\sigma_1 - 2s + 2h),\ XZ = 0, \tag{280), (281}$$

$$\tfrac{1}{3}(X^2 + Y^2 - 2Z^2) = \tfrac{1}{3}(p^4 - 4p^2q^2 + q^4)\,3m^2 \cos(2s - 2h). \tag{282}$$

In this case also the values of the coefficients are actually considerably greater than the amounts as computed from the first terms; and regard must be paid to this, as in the case of the Evection, when the values of the coefficients in the tidal expressions are computed. According to Professor Adams, the full values of the coefficients are, in longitude ·011489, and in c/r ·008249.

42. *The equilibrium height of tide.*

p_1, p_2, p_3 are the direction-cosines of the place of observation; and, if λ denote the latitude of the place, we have

$$p_1 = \cos\lambda,\ p_2 = 0,\ p_3 = \sin\lambda. \tag{283}$$

$$\therefore p_1^2 - p_2^2 = \cos^2\lambda,\ p_1p_2 = 0,\ p_2p_3 = 0,\ 2\,p_1p_3 = \sin 2\lambda, \tag{284}$$

$$\tfrac{1}{3}(p_1^2 + p_2^2 - 2\,p_3^2) = \tfrac{1}{3} - \sin^2\lambda. \tag{285}$$

Now supposing the place to be at the earth's surface, then

$$\rho = a, \text{ the earth's radius.}$$

$$\therefore V = \tfrac{3}{2}\frac{\mu M a^2}{c^3(1-e^2)^3}\left[\tfrac{1}{2}\cos^2\lambda\,(X^2 - Y^2) + \sin 2\lambda XZ + \tfrac{3}{2}\left(\tfrac{1}{3} - \sin^2\lambda\right)\tfrac{1}{3}(X^2 + Y^2 - 2Z^2)\right]. \tag{286}$$

The X-Y-Z functions being simple time harmonics, the principle of forced vibrations (§ 14) allows us to conclude that the forces corresponding to V will generate oscillations in the ocean of the same periods as the terms in V, but of unknown amplitudes and epochs. Now the work represented by V must clearly be equal to hg, where h is the height of the tide from the undisturbed sea level and g the force of gravity.

$$\therefore V = hg, \text{ or } h = \frac{V}{g} = \frac{Va^2}{E\mu}, \tag{287}$$

where E is the mass of the earth.

$$\therefore h = \tfrac{3}{2}\frac{M}{E}\left(\frac{a}{c}\right)^3\frac{a}{(1-e^2)^3}\left[\tfrac{1}{2}\cos^2\lambda\,(X^2 - Y^3) + \sin 2\lambda XZ + \tfrac{3}{2}\left(\tfrac{1}{3} - \sin^2\lambda\right)\tfrac{1}{3}(X^2 + Y^2 - 2Z^2)\right]. \tag{288}$$

It is convenient to have the quantities

$$\frac{X^2 - Y^2}{(1-e^2)^3},\quad \frac{XZ}{(1-e^2)^3},\quad \frac{\tfrac{1}{3}(X^2 + Y^2 - 2Z^2)}{(1-e^2)^3} \tag{289}$$

expressed as a series of cosine terms, each sign being positive.

Since

$$\begin{aligned} -\cos x &= +\cos(x + \pi),\\ -\sin x &= +\cos\left(x + \frac{\pi}{2}\right),\\ +\sin x &= +\cos\left(x - \frac{\pi}{2}\right); \end{aligned} \tag{290}$$

and

$$\frac{1}{(1-e^2)^3} = 1 + 3e^2,$$

approximately, we have

$$\begin{aligned} \frac{X^2 - Y^2}{(1-e^2)^3} &= (1 - \tfrac{5}{2}e^2)\,p^4\cos 2(\chi - \sigma_1) + (1 + \tfrac{3}{2}e^2)\,2p^2q^2\cos 2\chi && \mathrm{M_2},\ \mathrm{K_2}\\ &+ \tfrac{7}{2}ep^4\cos(2\chi - 3\sigma_1 + \varpi_1) && \mathrm{N_2}\\ &+ \tfrac{1}{2}ep^4\sqrt{\{1 - 12\tan^2\tfrac{1}{2}I\cos 2\varpi_1\}}\cos(2\chi - \sigma_1 - \varpi_1 - R + \pi) && \mathrm{L_2}\\ &+ \tfrac{17}{2}e^2p^4\cos(2\chi - 4\sigma_1 + 2\varpi_1) && 2\,\mathrm{N}\\ &+ \tfrac{105}{16}mep^4\cos(2\chi - 2\sigma_1 - s + 2h - p^*) && \nu_2\\ &+ \tfrac{15}{16}mep^4\cos(2\chi - 2\sigma_1 + s - 2h + p^* + \pi) && \lambda_2\\ &+ \tfrac{23}{8}m^2p^4\cos(2\chi - 2\sigma_1 - 2s + 2h), && \mu_2 \end{aligned}$$

$$\frac{XZ}{(1-e^2)^3} = (1-\tfrac{5}{2}e^2)\,[p^3q\cos(\chi-2\sigma_1+\tfrac{1}{2}\pi)+pq^3\cos(\chi+2\sigma_1-\tfrac{1}{2}\pi)] \qquad (291)\ \ O_1,\ OO$$

$$+(1+\tfrac{3}{2}e^2)\,pq\,(p^2-q^2)\cos(\chi-\tfrac{1}{2}\pi) \qquad K_1$$
$$+\tfrac{7}{2}ep^3q\cos(\chi-3\sigma_1+\varpi_1+\tfrac{1}{2}\pi) \qquad Q_1$$
$$+ep^3q\sqrt{\{\tfrac{5}{2}+\tfrac{3}{2}\cos 2\varpi_1\}}\cos(\chi-\sigma_1+Q-\tfrac{1}{2}\pi) \qquad M_1$$
$$+\tfrac{3}{2}epq\,(p^2-q^2)\cos(\chi+\sigma_1-\varpi_1-\tfrac{1}{2}\pi) \qquad J_1$$
$$+\tfrac{1}{2}\tfrac{7}{0}e^2p^3q\cos(\chi-4\sigma_1+2\varpi_1+\tfrac{1}{2}\pi) \qquad 2\,Q\dagger$$
$$+\tfrac{1}{1}\tfrac{0}{6}\tfrac{5}{2}mep^3q\cos(\chi-2\sigma_1-s+2h-p^*+\tfrac{1}{2}\pi), \qquad \rho_1\ddagger$$

$$\frac{\tfrac{1}{3}(X^2+Y^2-2Z^2)}{(1-e^2)^3} = \tfrac{1}{3}(p^4-4p^2q^2+q^4)\,[1+\tfrac{3}{2}e^2+3e\cos(\sigma_1-\varpi_1) \qquad (292)\ \ Mm$$
$$+\tfrac{4}{8}\tfrac{5}{1}me\cos(s-2h+p^*)+3m^2\cos(2s-2h)] \qquad MSf$$
$$+2p^2q^2[(1-\tfrac{5}{2}e^2)\cos 2\sigma_1+\tfrac{7}{2}e\cos(3\sigma_1-\varpi_1)]. \qquad Mf \qquad (293)$$

In these expressions

$$\tan R = \frac{\sin 2\varpi_1}{\tfrac{1}{6}\cot^2\tfrac{1}{2}I-\cos 2\varpi_1},\quad \tan Q = \tfrac{1}{2}\tan\varpi_1. \qquad (294)$$

p, q, χ, σ_1, ϖ_1 should now be replaced by their values in §§ 21, 37, thus giving the general expressions for the equilibrium tidal coefficients and arguments of Table 1, Part III. All tides have the universal coefficient $\frac{3}{2}\frac{M}{E}\left(\frac{a}{c}\right)^3 a$, which is about $1\frac{3}{4}$ feet in value.§ By (288), the semidiurnals, diurnals, and tides of long period have $\cos^2\lambda$, $\sin 2\lambda$, and $\frac{1}{2}-\frac{3}{2}\sin^2\lambda$ as general coefficients.

43. *The solar tides.*

Expressions for the solar components follow, because of symmetry, from those of the lunar. To pass from the latter to the former we have to put

$$s=h,\ p^*=p_1^*,\ \xi=\nu=0,\ \sigma=\eta,\ I=\omega,\ e=e_1,\ \varpi=\varpi_1. \qquad (295)$$

In order that the relative values of the theoretical amplitudes of solar and lunar components may be readily seen, the universal coefficient $\frac{3}{2}\frac{M}{E}\left(\frac{a}{c}\right)^3 a$ will be retained. This involves the introduction of a factor

$$\frac{\tau_1}{\tau} = \frac{\text{mass of sun}}{\text{mass of moon}}\times\left(\frac{\text{mean dist. of moon}}{\text{mean dist. of sun}}\right)^3 = 0{\cdot}46035 = \frac{1}{2{\cdot}17226} \qquad (296)$$

where the mass of the moon is assumed to be 1/81·5 that of the earth.

A tide of greater importance than some of those given in (291), (292), and (293) is one whose argument in (237) is $2\chi+\sigma_1-\varpi_1$. The mean value of its coefficient is 0·00323.

There is also the larger variational diurnal tide, which has been omitted: it would have a coefficient 0·00450; also an evectional termensual tide, $\frac{1}{1}\frac{0}{6}\frac{5}{2}me\sin^2 I\cos(3s-2h+p^*)$, with coefficient of magnitude 0·00292. All other tides in a complete development as far as the second order of small quantities, without any approximation as to the obliquity of the lunar orbit, would have smaller coefficients than those comprised in the above list. Such a development has been made by Professor J. C. Adams, and the values of all the coefficients computed therefrom, in comparison with the above.

† The symbol 2 Q is here adopted because Q_1 and 2 Q are analogous to N_2 and 2 N.

‡ A Greek letter is here adopted because λ_2 and ν_2 denote other evectional components.

§ If we assume (cf. Harkness, Solar Parallax, pp. 138, 140) $\frac{M}{E}=\frac{1}{81{\cdot}07}$, $\frac{a}{c}=\frac{1}{60{\cdot}34}$ $a=20\,902\,000$ feet, this coefficient becomes 1·760 feet; if $\frac{M}{E}=\frac{1}{81{\cdot}5}$, it becomes 1·751 feet. This is approximately the theoretical range of the lunar tide at the equator.

44. *Tides depending on the fourth power of the moon's parallax;* M_1, M_3, *etc.*
By equation (111) this portion of the tide-producing potential in $1/r^4$ is

$$V = \frac{\mu M}{r^4}\rho^3 \left(\tfrac{5}{2}\cos^3\theta - \tfrac{3}{2}\cos\theta\right). \tag{297}$$

Neglecting the eccentricity of the lunar orbit, as well as its inclination to the plane of the earth's equator, we obtain

$$\begin{aligned} V \div \frac{\mu M}{c^4}\rho^3 = {} & \tfrac{5}{8}(p_1^3 - 3\,p_1p_2^2)(m_1^3 - 3\,m_1m_2^2) \\ & + \tfrac{5}{8}(p_2^3 - 3\,p_1^2\,p_2)(m_2^3 - 3\,m_1^2\,m_2) \\ & + \tfrac{3}{8}(p_1^3 + p_1\,p_2^2 - 4\,p_1\,p_3^2)(m_1^3 + m_1\,m_2^2) \\ & + \tfrac{3}{8}(p_2^3 + p_1^2\,p_2 - 4\,p_2\,p_3^2)(m_1^2\,m_2 + m_2^3). \end{aligned} \tag{298}$$

We have seen in § 33 that a harmonic deformation of the form of V above, represents a possible shape of a sphere covered by water; that is, the equation of continuity is satisfied.

By (206)

$$m_1 = p^2\cos(\chi - l), \quad m_2 = -p^2\sin(\chi - l); \tag{299}$$

and so

$$m_1^3 - 3\,m_1\,m_2^2 = p^6\cos 3(\chi - l), \tag{300}$$

$$m_1^3 + m_1\,m_2^2 = p^6\cos(\chi - l). \tag{301}$$

Now put, as before,

$$p_1 = \cos\lambda,\ p_2 = 0,\ p_3 = \sin\lambda,$$

and

$$V = gh;$$

we have

$$h = \tfrac{3}{2}\frac{M}{E}\left(\frac{a}{c}\right)^3\frac{a^2}{c}\left[\tfrac{5}{12}\cos^2\lambda\,p^6\cos 3(\chi - l) + \tfrac{1}{12}\cos\lambda\,(1 - 5\sin^2\lambda)\,p^6\cos(\chi - l)\right] \tag{302}$$

Now, $\cos\lambda\,(5\sin^2\lambda - 1)$ has its maximum value $\frac{16}{3\sqrt{15}}$ when $\cos\lambda = \frac{2}{3}\sqrt{\frac{2}{5}}$: that is to say, when $\lambda = 58^\circ\ 54'$; thus we may write (302)

$$\begin{aligned} h = {} & \tfrac{3}{2}\frac{M}{E}\left(\frac{a}{c}\right)^3 a\left[\cos^3\lambda\,\tfrac{5}{12}\left(\frac{a}{c}\right)\cos^6\tfrac{1}{2}I\cos[3t + 3(h - \nu) - 3(s - \xi)]\right. \\ & \left. + \tfrac{3}{16}\sqrt{15}\cos\lambda\,(1 - 5\sin^2\lambda)\,\tfrac{1}{48}\sqrt{15}\left(\frac{a}{c}\right)\cos^6\tfrac{1}{2}I\cos[t + (h - \nu) - (s - \xi)]\right]. \end{aligned} \tag{303}$$

In this expression observe that there is the same 'general*' coefficient' outside [ ] as in the previous development; that the spherical harmonics $\cos^3\lambda$, $\frac{3}{16}\sqrt{15}\cos\lambda\,(5\sin^2\lambda - 1)$ have the maximum values unity, the first at the equator and the second in latitude 58° 54′. The 'speeds' of these two tides are respectively $3(\gamma - \sigma)$ or 43°·4761563 per mean solar hour, and $\gamma - \sigma$, or 14°·4920521 per mean solar hour.

The coefficient of the tide $3(\gamma - \sigma)$, which is comparable with those in (288), is

$$\tfrac{5}{12}\left(\frac{a}{c}\right)\cos^6\tfrac{1}{2}I, \tag{304}$$

and the mean value of this function multiplied by $\cos 3(\nu - \xi)$ is ·00599; also the coefficient of the tide $(\gamma - \sigma)$, likewise comparable with previous coefficient, is

$$\tfrac{1}{48}\sqrt{15}\left(\frac{a}{c}\right)\cos^6\tfrac{1}{2}I, \tag{305}$$

and the mean value of this function multiplied by $\cos(\nu - \xi)$ is ·00165.

* I. e. universal.

The expression for the tides is written in the form applicable to the equatorial belt bounded by latitudes 26° 34′ N. and S. (viz. where $\sin l = \frac{1}{3}\sqrt{5}$). Outside of this belt, what may be called high tide, will correspond with low water. The distribution of land on the earth will probably, however, seriously disturb the latitude of evanescent tide.

It must be noticed that the $\gamma - \sigma$ tide is comparatively small in the equatorial belt, having at the equator only $\frac{2}{3}$ of its value in latitude 58° 54′.

Referring to the schedule of theoretical importance,* we see that the ter-diurnal tide M_3 would come in last but four on the list, and the diurnal tide M_1 (with *rigorous* speed $\gamma - \sigma$) would only be about a half of the synodic fortnightly variational tide.

It thus appears that the ter-diurnal tide is smaller than some of the tides not included in our approximation, and that the diurnal tide should certainly be negligeable.

The value of the M_1 tide, however, is found with scarcely any trouble, from the numerical analysis of the tidal observations, and therefore it is proposed that it should still be evaluated.

45. *On the mean values of the coefficients.*

Any of the preceding lunar tides may be written in the form

$$J \cos (T + u) \tag{306}$$

where J is a function of I, and u a function and ν and ξ; this may be seen upon referring to Table 1. Now since I is by equations (44) or (49) a function of ω, i, and N, so also is J. The expression (306) when developed will give a term independent of N, which may be written in the form

$$J_1 \cos T \tag{307}$$

wherein J_1 is the mean value of the semirange in question.

It may be proved (see Table 1 and § 22) that in no case does J involve a term with a sine of an odd multiple of N, and it may also be shown that in every term of $\sin u$ there will occur a sine of an odd muitiple of N; whence it follows that $J \sin u$ has mean value zero, and J_1 is the term independent of N in $J \cos u$.

It may also be proved that in no case does $\cos u$ involve a term in $\cos N$, and that the terms in $\cos 2N$ are all of order i^2; also it appears that J always involves a term in $\cos N$, and also terms in $\cos 2N$ of order i^2.

Hence to the degree of approximation adopted, J_1 is equal to $J_0 \cos u_0$, where J_0 is the mean value of J, and $\cos u_0$ the mean value of $\cos u$.

In evaluating $\cos u_0$ from the formulæ (47)-(49), we may observe that wherever $\sin^2 N$ occurs it may be replaced by $\frac{1}{2}$; for $\sin^2 N = \frac{1}{2} - \frac{1}{2}\cos 2N$, and the $\cos 2N$ has mean value zero.

The following are the values of $\cos u_0$ thus determined from (43), (46):—

$$\begin{aligned}
&(\alpha)\quad \cos 2(\nu - \xi)_0 = 1 - i^2\left(\frac{1-\cos\omega}{\sin\omega}\right)^2\\
&(\beta)\qquad \cos 2\nu_0 = 1 - i^2\,\frac{1}{\sin^2\omega}\\
&(\gamma)\quad \cos(2\xi - \nu)_0 = 1 - \tfrac{1}{4}i^2\left(\frac{1-2\cos\omega}{\sin\omega}\right)^2\\
&(\delta)\quad \cos(2\xi + \nu)_0 = 1 - \tfrac{1}{4}i^2\left(\frac{1+2\cos\omega}{\sin\omega}\right)^2\\
&(\varepsilon)\qquad \cos\nu_0 = 1 - \tfrac{1}{4}i^2\,\frac{1}{\sin^2\omega}\\
&(\zeta)\qquad \cos 2\xi_0 = 1 - i^2\cot^2\omega.
\end{aligned} \tag{308}$$

The suffix $_0$ indicating the mean value.

Similarly the following are the J_0's or mean values of J:—

$$\begin{aligned}
&(\alpha')\qquad \cos^2\tfrac{1}{2}I_0 = \cos^2\tfrac{1}{2}\omega\left[1 + \tfrac{1}{2}i^2\,\frac{\sin^2\frac{1}{2}\omega - \cos\omega}{\cos^2\frac{1}{2}\omega}\right]\\
&(\beta')\ \&\ (\zeta')\quad \sin^2 I_0 = \sin^2\omega\left[1 + i^2\,\frac{1 - \frac{3}{4}\sin^2\omega}{\sin^2\omega}\right]\\
&(\gamma')\quad \sin I_0\cos^2\tfrac{1}{2}I_0 = \sin\omega\cos^2\tfrac{1}{2}\omega\left[1 + \tfrac{1}{4}i^2\left(\frac{\cos 2\omega}{\sin^2\omega} - \frac{2\cos\omega}{\cos^2\frac{1}{2}\omega}\right)\right]\\
&(\delta')\quad \sin I_0\sin^2\tfrac{1}{2}I_0 = \sin\omega\sin^2\tfrac{1}{2}\omega\left[1 + \tfrac{1}{4}i^2\left(\frac{\cos 2\omega}{\sin^2\omega} + \frac{2\cos\omega}{\sin^2\frac{1}{2}\omega}\right)\right]\\
&(\varepsilon')\quad \sin I_0\cos I_0 = \sin\omega\cos\omega\,[1 + \tfrac{1}{4}i^2(\cot^2\omega - 5)].
\end{aligned} \tag{309}$$

* This embraces the astronomical tides given in Table 1; also a termensual and an evictional monthly.

On referring to schedules [B],* it appears that (α) multiplied by (α') is the mean value of the $\cos^4\frac{1}{2}I\cos 2(\nu-\xi)$ which occurs in the semidiurnal terms; and so on with the other letters, two and two. Performing these multiplications, and putting $1-\frac{1}{2}i^2$ in the results as equal to $\cos^4\frac{1}{2}i$, and $1-\frac{3}{2}i^2$ as equal to $1-\frac{3}{2}\sin^2 i$, we find that the mean values are all unity for the following functions, viz.:

$$\frac{\cos^4\frac{1}{2}I\cos 2(\nu-\xi)}{\cos^4\frac{1}{2}\omega\cos^4\frac{1}{2}i},\quad \frac{\sin^2 I\cos 2\nu}{\sin^2\omega(1-\frac{3}{2}\sin^2 i)},\quad \frac{\sin I\cos^2\frac{1}{2}I\cos(2\xi-\nu)}{\sin\omega\cos^2\frac{1}{2}\omega\cos^4\frac{1}{2}i},$$
$$\frac{\sin I\sin^2\frac{1}{2}I\cos(2\xi+\nu)}{\sin\omega\sin^2\frac{1}{2}\omega\cos^4\frac{1}{2}i},\quad \frac{\sin I\cos I\cos\nu}{\sin\omega\cos\omega(1-\frac{3}{2}\sin^2 i)},\quad \frac{\sin^2 I\cos 2\xi}{\sin^2\omega\cos^4\frac{1}{2}i}. \tag{310}$$

Lastly, it is easy to show rigorously that the mean value of

$$\frac{1-\frac{3}{2}\sin^2 I}{(1-\frac{3}{2}\sin^2\omega)(1-\frac{3}{2}\sin^2 i)} \tag{311}$$

is also unity.

If we write

$$\varpi=\cos\tfrac{1}{2}\omega\cos\tfrac{1}{2}i-\sin\tfrac{1}{2}\omega\sin\tfrac{1}{2}ie^{Ni} \tag{312}$$

$$\varkappa=\sin\tfrac{1}{2}\omega\cos\tfrac{1}{2}i+\cos\tfrac{1}{2}\omega\sin\tfrac{1}{2}ie^{Ni} \tag{313}$$

where i stands for $\sqrt{-1}$; and let ϖ_1, $\varkappa_1$ denote the same functions with the sign of N changed, then it may be proved rigorously that

$$\cos^4\tfrac{1}{2}I\cos 2(\nu-\xi)=\tfrac{1}{2}(\varpi^4+\varpi_1^4) \tag{314}$$

$$\sin^2 I\cos 2\nu=2(\varpi^2\varkappa_1^2+\varpi_1^2\varkappa^2) \tag{315}$$

$$\sin I\cos^2\tfrac{1}{2}I\cos(2\xi-\nu)=\varpi^3\varkappa+\varpi_1^3\varkappa_1 \tag{316}$$

$$\sin I\sin^2\tfrac{1}{2}I\cos(2\xi+\nu)=\varpi\varkappa^3+\varpi_1\varkappa_1^3 \tag{317}$$

$$\sin I\cos I\cos\nu=(\varpi\varkappa_1+\varpi_1\varkappa)(\varpi\varpi_1-\varkappa\varkappa_1) \tag{318}$$

$$\sin^2 I\cos 2\xi=2(\varpi^2\varkappa^2+\varpi_1^2\varkappa_1^2) \tag{319}$$

$$1-\tfrac{3}{2}\sin^2 I=\varpi^2\varpi_1^2-4\varpi\varpi_1\varkappa\varkappa_1+\varkappa^2\varkappa_1^2. \tag{320}$$

The proof of these formulæ, and the subsequent development of the functions of the ϖ's and $\varkappa$'s, constitute the rigorous proof of the formulæ, of which the approximate proof has been indicated above. The analogy between the ϖ's and $\varkappa$'s, and the p, q of the earlier developments of this Report, is that if i vanishes $\varpi=\varpi_1=p$, $\varkappa=\varkappa_1=q$. [See a paper in the *Phil. Trans.* R. S. Part II. 1880, p. 713.]

Mean sea level varies slightly on account of the regression of the lunar node. The mean value of the coefficient of change in mean level due to the existence of the moon (cf. § 38) is

$$\tfrac{1}{3}(1+\tfrac{3}{2}e^2)(1-\tfrac{3}{2}\sin^2 i)(1-\tfrac{3}{2}\sin^2\omega)=0{\cdot}25224,$$

and the variable part is, approximately,

$$-(1+\tfrac{3}{2}e^2)\sin i\cos i\sin\omega\cos\omega\cos N,=-0{\cdot}0328\cos N,$$

N being the longitude of the ascending node, which decreases at the rate of 19°·34 per annum or 0°·0529539 per day (§ 13).

46. *The factor f.*

Since ν, ξ are always small, the mean values of the expressions

$$\frac{\cos^4\frac{1}{2}I}{\cos^4\frac{1}{2}\omega\cos^4\frac{1}{2}i}=\frac{\cos^4\frac{1}{2}I}{0{\cdot}91538} \tag{321}$$

$$\frac{\sin^2 I}{\sin^2\omega(1-\frac{3}{2}\sin^2 i)}=\frac{\sin^2 I}{0{\cdot}15652} \tag{322}$$

$$\frac{\sin I\cos^2\frac{1}{2}I}{\sin\omega\cos^2\frac{1}{2}\omega\cos^4\frac{1}{2}i}=\frac{\sin I\cos^2\frac{1}{2}I}{0{\cdot}38005} \tag{323}$$

$$\frac{\sin I\sin^2\frac{1}{2}I}{\sin\omega\sin^2\frac{1}{2}\omega\cos^4\frac{1}{2}i}=\frac{\sin I\sin^2\frac{1}{2}I}{0{\cdot}01638} \tag{324}$$

* B. A. A. S. Report, 1883, p. 66, or Table 1, this manual.

$$\frac{\sin I \cos I}{\sin \omega \cos \omega (1 - \frac{3}{2} \sin^2 i)} = \frac{\sin 2I}{0{\cdot}72147} \tag{325}$$

$$\frac{\sin^2 I}{\sin^2 \omega \cos^4 \frac{1}{2} i} = \frac{\sin^2 I}{0{\cdot}15779} \tag{326}$$

are always near unity,

while the mean value of

$$\frac{1 - \frac{3}{2} \sin^2 I}{(1 - \frac{3}{2} \sin^2 \omega)(1 - \frac{3}{2} \sin^2 i)} = \frac{1 - \frac{3}{2} \sin^2 I}{0{\cdot}75316} \tag{327}$$

is exactly unity But these expressions are functions of I proportional to those functions of I which are labeled "coefficients" in Table 1. Therefore they may be taken as factors f by which the mean values of the coefficients are to be multiplied in order to produce a value for a particular time.

The luni-solar tides.—In combining two waves, A and B, of equal speeds, the resultant amplitude is, § 4, Part III,

$$\sqrt{A^2 + 2AB \cos (\text{phase } A \sim \text{phase } B) + B^2}, \tag{328}$$

and the displacement or alteration in the phase of A due to B is an angle whose tangent is

$$\frac{\sin (\text{phase } B - \text{phase } A)}{\cos (\text{phase } B - \text{phase } A) + \frac{A}{B}}; \tag{329}$$

and this is so regardless of the relative sizes of A and B.

Denoting, for the moment, lunar K_1 by $[K_1]$ and solar K_1 by $\{K_1\}$, and letting the accent signify that the longitude of the lunar node is involved, these two waves may be written

$$\{K_1\} \cos (t + h + \tfrac{1}{2}\pi - K_1{}^\circ), \tag{330}$$

$$[K_1'] \cos (t + h + \tfrac{1}{2}\pi - \nu - K_1{}^\circ). \tag{331}$$

The first is displaced by the second by an angle $-\nu'$, where

$$\tan \nu' = \frac{\sin \nu}{\cos \nu + \{K_1\}/[K_1']} \tag{332}$$

and the resultant amplitude is

$$K_1' = \sqrt{[K_1']^2 + 2[K_1']\{K_1\} \cos \nu + \{K_1\}^2}. \tag{333}$$

The phase of the resultant wave is

$$t + h + \tfrac{1}{2}\pi - K_1{}^\circ - \nu'. \tag{334}$$

Now t varies 15° per mean solar hour and h, 0·0410686, and so the hourly variation in $t + h$ is k_1; ∴ the resultant oscillation is, reckoning from $t = 0$ on a day when $h = h_0$,

$$K_1' \cos (k_1 t - \zeta) \tag{335}$$

where

$$\zeta = \varkappa - \tfrac{1}{2}\pi - h_0 + \nu'. \tag{336}$$

But

$$\zeta = \varkappa - (V_0 + u) \tag{337}$$

and

$$V_0 + u = \tfrac{1}{2}\pi + h_0 - \nu'. \tag{338}$$

The context shows whether t is expressed in degrees or hours. From (325),

$$\frac{[K_1']}{[K_1]} = \frac{\sin I \cos I}{\sin \omega \cos \omega (1 - \frac{3}{2}\sin^2 i)} = f \text{ of lunar } K_1 = f([K_1]). \tag{339}$$

$$\frac{[K_1']}{\{K_1\}} = \frac{\tau(1 + \frac{3}{2}e^2)\sin I \cos I}{\tau_1(1 + \frac{3}{2}e_1^2)\sin \omega \cos \omega}; \tag{340}$$

$\therefore f$ of lunisolar K_1 or $f(K_1)$

$$= \frac{K_1'}{\{K_1\} + [K_1]} = \frac{\sqrt{1 + 2\frac{\{K_1\}}{[K_1']}\cos \nu + \frac{\{K_1\}^2}{[K_1']^2}}}{1 + \frac{\{K_1\}}{[K_1]}} \times \frac{[K_1']}{[K_1]} \tag{341}$$

where

$$\frac{\{K_1\}}{[K_1]} = \frac{\tau_1(1 + \frac{3}{2}e_1^2)}{\tau(1 + \frac{3}{2}e^2)} \frac{1}{1 - \frac{3}{2}\sin^2 i} = 0{\cdot}46407, \tag{342}$$

$$\frac{\{K_1\}}{[K_1']} = \frac{\{K_1\}}{[K_1]} \frac{\sin \omega \cos \omega (1 - \frac{3}{2}\sin^2 i)}{\sin I \cos I}. \tag{343}$$

Similarly for K_2

$$\tan 2\nu'' = \frac{\sin 2\nu}{\cos 2\nu + \{K_2\}/[K_2']} \tag{344}$$

factor f for lunisolar K_2

$$= \frac{\sqrt{1 + 2\frac{\{K_2\}}{[K_2']}\cos 2\nu + \frac{\{K_2\}^2}{[K_2']^2}}}{1 + \frac{\{K_2\}}{[K_2]}} \frac{[K_2']}{[K_2]} \tag{345}$$

where

$$\frac{\{K_2\}}{[K_2]} = \frac{\tau_1(1 + \frac{3}{2}e_1^2)}{\tau(1 + \frac{3}{2}e^2)} \frac{1}{1 - \frac{3}{2}\sin^2 i} = 0{\cdot}46407, \tag{346}$$

$$\frac{\{K_2\}}{[K_2']} = \frac{\{K_2\}}{[K_2]} \frac{\sin^2 \omega (1 - \frac{3}{2}\sin^2 i)}{\sin^2 I}. \tag{347}$$

The tides L_2 *and* M_1.—By § 42 the L_2 tide is proportional to

$$\cos^4 \tfrac{1}{2} I \sqrt{1 - 12\tan^2 \tfrac{1}{2} I \cos 2(p - \xi)} \times \cos[2t + 2(h - \nu) - 2(s - \xi) + (s - p) - R + \pi] \tag{348}$$

where

$$\tan R = \frac{\sin 2(p - \xi)}{\frac{1}{6}\cot^2 \frac{1}{2} I - \cos 2(p - \xi)}. \tag{349}$$

Let P denote the value of $p - \xi$ at the middle of the series considered, and suppose R to be computed for this same time. The approximate value of the f of L_2 is

$$\frac{\cos^4 \frac{1}{2} I}{\cos^4 \frac{1}{2} \omega \cos^4 \frac{1}{2} i} \sqrt{1 - 12\tan^2 \tfrac{1}{2} I \cos 2P}. \tag{350}$$

By § 42 the M_1 tide is proportional to

$$\tfrac{1}{2} e \sin I \cos^2 \tfrac{1}{2} I \sqrt{\tfrac{5}{2} + \tfrac{3}{2}\cos 2(p - \xi)} \times \cos[t + (h - \nu) - (s - \xi) + Q + \tfrac{1}{2}\pi] \tag{351}$$

where

$$\tan Q = \tfrac{1}{3}\tan(p - \xi). \tag{352}$$

If P denote the value of $p - \xi$ at the middle of the series

$$\tan Q = \tfrac{1}{3}\tan P. \tag{353}$$

Since $\tan \frac{1}{2} P$ and $\tan Q$ pass through zero or infinity simultaneously, it follows that they always lie in the same quadrant.

The f of M_1 may be taken as

$$\frac{\sin I \cos^2 \frac{1}{2} I}{\sin \omega \cos^2 \frac{1}{2} \omega \cos^4 \frac{1}{2} i} \sqrt{\tfrac{5}{2} + \tfrac{3}{2} \cos 2P}. \tag{354}$$

The average value of this expression is not very near to unity as is the average value of most of the f's of the other components. It is, in fact, about 1·5505, as is shown at the end of Table 10.

For

$$\begin{aligned}
\cos^4 \tfrac{1}{2} I, &\quad f = 1{\cdot}0003 - 0{\cdot}0375 \cos N + 0{\cdot}0002 \cos 2N; \\
\sin I \cos^2 \tfrac{1}{2} I, &\quad f = 1{\cdot}0088 + 0{\cdot}1886 \cos N - 0{\cdot}0146 \cos 2N; \\
K_2, &\quad f = 1{\cdot}0243 + 0{\cdot}2847 \cos N + 0{\cdot}0080 \cos 2N; \\
K_1, &\quad f = 1{\cdot}0060 + 0{\cdot}1156 \cos N - 0{\cdot}0088 \cos 2N; \\
\sin^2 I, &\quad f = 1{\cdot}0429 + 0{\cdot}4135 \cos N - 0{\cdot}0040 \cos 2N; \\
1 - \tfrac{3}{2} \sin^2 I, &\quad f = 1{\cdot}0000 - 0{\cdot}1299 \cos N + 0{\cdot}0013 \cos 2N; \\
L_2, &\quad f = 0{\cdot}9780 + \text{terms in } N \text{ and } P; \\
M_1, &\quad f = 1{\cdot}5505 + \text{terms in } N \text{ and } P.
\end{aligned} \tag{355}$$

47. Table 37 shows the equilibrium amplitudes of several components (disregarding, as usual, the mutual attraction of the fluid) for various latitudes. In order to see what type of tide may belong to a particular latitude, draw the M_2, K_1, and O_1 waves, with the amplitudes given in the table, upon separate pieces of paper. K_1 and O_1 generally conspire for extreme declinations of the moon and interfere when she is near the equator. The resultant K_1O_1 wave combined with the M_2 wave will show the diurnal inequality peculiar to the latitude selected.

Meteorological tides.—As already stated, there must generally be a tidal component S_1 whose period is a mean solar day; for, the daily variation of the barometer is a well-established fact. At some places the land and sea breezes may also give a component of this speed which, of course, combines with the one answering to the variation of the barometer.

In regard to the annual component Sa, it may be said that even if it repeat itself reasonably well at a given place, there is no reason for supposing its curve to be nearly harmonic. Consequently we should expect terms higher than the first to appear in the Fourier series representing it. The semiannual Ssa (partly astronomical and partly meteorological) is the only harmonic usually worked for.

The (equilibrium) argument of Sa is h or the mean longitude of the sun and of Ssa, it is $2h$. These arguments become zero at the time of the vernal equinox; arguments of Sa, Ssa might be so taken as to become zero at the beginning, say, of the calendar year.

48. *Overtides or shallow-water components.*

Let the height of the tide, exclusive of shallow water components, be denoted by y'; let the total height be, as usual, denoted by y. Then y should be some function of y' such that

$$y = K_1 y' + K_2 y'^2 + K_3 y'^3 + \quad . \quad . \quad . \tag{356}$$

where K_1, K_2, K_3 are the numerical coefficients of the powers of y'. Now we know that where y' is small,

$$y = y'; \text{ that is, } K_1 = 1.$$

Therefore we shall write

$$y = A \cos (\arg A - A^\circ) + B \cos (\arg B - B^\circ) + \quad . \quad . \quad . \quad + K_2 y'^2 + K_3 y_1'^3, \tag{357}$$

wherein A, B, . . . are not shallow-water components. For the shallow-water tides constituting $K_2 y'^2$, we are not concerned with the absolute magnitude of the coefficient K_2, but

rather with the relative values of the coefficients of the constituent terms. Squaring y', taken equal to y, we have, besides the constant terms A^2, B^2, . . . ,

$$\tfrac{1}{2}\,A^2\cos(\arg 2\,A-2\,A^\circ)+\tfrac{1}{2}\,B^2\cos(\arg 2\,B-2\,B^\circ).$$

$$+AB\cos(\arg A+\arg B-A^\circ-B^\circ)+AB\cos(\arg A-\arg B-A^\circ+B^\circ)$$

$$+\text{ similar terms whose coefficients are }\tfrac{1}{2}\,C^2,\ AC,\ BC,\ \ldots\ . \tag{358}$$

Now the shallow-water component whose argument is $\arg A\pm\arg B$, must have as its speed $a\pm b$. In this manner the following tables of speeds, arguments, and what may be called *primitive* amplitudes and epochs have been obtained. Having obtained the principal terms of y'^2, one can then proceed to the terms of y'^3 or $y'\times y'^2$. (See Table 36* for a list of the principal shallow-water components.

Considering a group of shallow-water tides whose speeds are approximately equal, let us assume that each theoretical epoch differs from each primitive epoch by a quantity E_0 which is constant for the group. Then

$$A^\circ+B^\circ-E_0=(AB)^\circ \tag{359}$$

where $(AB)^\circ$ is the theoretical epoch of a component whose speed is $a+b$. In like manner

$$A^\circ+A^\circ-E_0=(AA)^\circ \tag{360}$$

$$B^\circ+B^\circ-E_0=(BB)^\circ. \tag{361}$$

Suppose A to be larger than B, and suppose that $(AA)^\circ$ and of course A°, B°, have been determined from observation. Then it is possible to infer $(AB)^\circ$ and $(BB)^\circ$. In fact $E_0=2\,A^\circ-(AA)^\circ$, substituted in the expressions for $(AB)^\circ$, $(BB)^\circ$ gives

$$(AB)^\circ=(AA)^\circ+B^\circ-A^\circ, \tag{362}$$

$$(BB)^\circ=(AA)^\circ+2\,B^\circ-2\,A^\circ. \tag{363}$$

Let it likewise be assumed that in each group the primitive range must be multiplied by the same constant C_0;

$$\therefore\ \tfrac{1}{2}C_0\cdot A\cdot A=(AA), \tag{364}$$

$$C_0\cdot A\cdot B=(AB), \tag{365}$$

$$\tfrac{1}{2}C_0\cdot B\cdot B=(BB), \tag{366}$$

$$C_0\cdot A\cdot C=(AC), \tag{367}$$

where (AA), (AB) . . . denote the theoretical amplitudes of components whose speeds are $a+a$ or $2\,a$, and $a\pm b$, . . . If we happen to know (AA) (and of course A, B, . . .) from observation, then (AB), (BB) . . . can be inferred. In fact

$$(AB)=2\,(AA)\cdot\frac{B}{A}, \tag{368}$$

$$(BB)=(AA)\cdot\frac{B^2}{A^2}, \tag{369}$$

. . . . . .

Applying these rules to $(MS)_4$ and S_4 the values of their coefficients given in Table 1 may be obtained. This agrees with the inferences made in § 18. For applications to nature, see Ferrel, in the Survey Report for 1882, pp. 442, 443, 445, 447.

* Adapted from Ferrel, United States Coast and Geodetic Survey Report, 1878, pp. 273–276.

The "corrected" equilibrium theory.

49. It has been already noticed (§ 40, Part I) that small bodies of water may obey the "corrected" equilibrium theory. That is, their surfaces may be everywhere perpendicular to the force of gravity as perturbed by the moon. It remains to develop the disturbing force into a series of harmonic terms.

The value of the potential of the tidal forces is

$$V = \mu M \left[\frac{\rho^2}{r^3}\left(\frac{3\cos^2\theta - 1}{2}\right)\right]$$

where

$$\mu = g\frac{a^2}{E}.$$

$$\therefore \frac{V}{g} = h = \tfrac{3}{4}\frac{M}{E}\frac{a^4}{r^3}\Big[\cos^2\lambda\cos^2\delta\cos 2(\psi - l) + 2\sin\lambda\cos\lambda\sin 2\delta\cos(\psi - l) + \tfrac{1}{4}(3\sin^2\lambda - 1)(3\sin^2\delta - 1)\Big]. \tag{370}$$

Here l is used to denote the west longitude of the point, its former significations (§§ 25, 37) being no longer necessary.

The slopes of the disturbed spherical layer to the surface of the undisturbed sphere are

$$\frac{\partial h}{a\,\partial\lambda}, \quad \frac{\partial h}{a\cos\lambda\,\partial l}, \tag{371}$$

the former being the slope (elevation) in the south-to-north direction, the latter in the east-to-west. These slopes are the deviations of the plumb line from the vertical, or they are the forces causing its deviation where g is the vertical force.*

$$-\frac{\partial h}{a\cos\lambda\,\partial l} = \text{eastward component} = \tfrac{3}{2}\frac{M}{E}\frac{a^3}{r^3}\Big[-\cos\lambda\cos^2\delta\sin 2(\psi - l) - \sin\lambda\sin 2\delta\sin(\psi - l)\Big]. \tag{372}$$

$$-\frac{\partial h}{a\,\partial\lambda} = \text{southward component} = \tfrac{3}{4}\frac{M}{E}\frac{a^3}{r^3}\Big[\sin 2\lambda\cos^2\delta\cos 2(\psi - l) - 2\cos 2\lambda\sin 2\delta\cos(\psi - l) + \sin 2\lambda(1 - 3\sin^2\delta)\Big]. \tag{373}$$

Let e denote the easting of a given point from the no-tide point and s the southing, expressed in feet; then at any instant the height of the tide (H) is $e \times$ eastward component $+ s \times$ southward component. Let the height due to semidiurnal eastward component be denoted by H_{2_e}, and similarly for southward component by H_{2_s}, we have

$$\frac{H_{2_e}}{h_2} = -\frac{2e}{a}\frac{\tan 2(\psi - l)}{\cos\lambda}, \tag{374}$$

$$\frac{H_{2_s}}{h_2} = +\frac{2s}{a}\tan\lambda. \tag{375}$$

But from § 42 we have for the height of the (uncorrected) equilibrium semidiurnal lunar tide

$$h_2 = \tfrac{3}{2}\frac{M}{E}\left(\frac{a}{c}\right)^3 a\cos^2\lambda \times$$

$$\begin{cases} \tfrac{1}{2}(1 - \tfrac{5}{2}e^2)\cos^4\tfrac{1}{2}I\cos[2t + 2(h - \nu) - 2(s - \xi)] \\ + \tfrac{1}{2}(1 + \tfrac{3}{2}e^2)\tfrac{1}{2}\sin^2 I\cos[2t + 2(h - \nu)] \\ + \tfrac{1}{2}\cdot\tfrac{7}{2}e\cos^4\tfrac{1}{2}I\cos[2t + 2(h - \nu) - 2(s - \xi) - (s - p)] \\ + \quad . \quad . \quad . \quad . \end{cases} \tag{376}$$

* The diurnal term of Eq. 23^{iv}, § 812, Thomson and Tait, should be multiplied by 2; and in Eq. 23^{v}, the diurnal term should have its sign changed.

In this equation e denotes the eccentricity of the lunar orbit.

The time of the maximum of a single periodic disturbance of level can be found as follows:

It is obvious that H_2, has its maximum simultaneous with the maximum or minimum of h_2; $H_{2'}$ has its maximum three hours, or 90°, later or earlier. The resultant disturbance has its maximum between these two times. The hour angle ($c_2 t$) reckoned from the transit of the fictitious body or the maximum of h_2, is

$$\tan^{-1} \frac{H_{2'}}{H_{2,}}. \tag{377}$$

The corresponding height is

$$H_{2,} \cos c_2 t + H_{2'} \sin c_2 t. \tag{378}$$

For M_2,

$$\frac{H_{2'}}{M_2} = \frac{2}{a} s \tan \lambda \; ; \; \therefore H_{2'} = 0{\cdot}800 \frac{s}{a} \sin 2\lambda, \tag{379}$$

$$H_{2,} = -0{\cdot}800 \frac{2}{a} e \cos \lambda \; ; \tag{380}$$

a, the earth's mean radius, is 20 902 000 feet, and $0{\cdot}800 \cos^2 \lambda$ the equilibrium value of M_2.

Example.—From a map of Lake Superior we see that the no-tide point (center of gravity of the surface) is 6 miles north of Keweenaw Point (Lat. 47° 32′, Lon. 87°). The line joining this point to Duluth is 210 miles in length and bears S. 76½° W. The no-tide point is 4° 19′ (or 17^m) E. of Duluth. Required the amplitude and epoch of M_2 at Duluth.

Here

$$s = \quad 49 \times 5280 \text{ feet},$$
$$c = -204 \times 5280 \quad ''$$

$$H_{2,} = 0{\cdot}0099,$$
$$H_{2'} = 0{\cdot}0557;$$

$$\therefore c_2 t = 80°,$$

$$H_{2'} \cos 80° + H_{2,} \sin 80° = 0{\cdot}0566 = M_2,$$

$\frac{80°}{28{\cdot}984} = 2^h\ 46^m$ = time of HW at Duluth in no-tide point time. $\therefore 2^h\ 46^m - 17^m = 2^h\ 29^m =$ HWI for Duluth $M_2° = 80° - 8° = 72°$.

Observation gives* $M_2 = 0{\cdot}063$ feet, $M_2° = 81°$.

50. The "corrected" equilibrium tide can be obtained from the uncorrected in the following manner whether the sea be small or large:

In the first place make two stereographic projections, one of the northern and one of the southern hemispheres, the pole in each case being at the center. Upon these mark the outlines of the sea in question. Upon a partially transparent sheet, using the same kind and size of projection, let the equilibrium heights of a given component, say of M_2, be written in their proper places. Let the center of this sheet be placed upon the center of either hemisphere, and place the radiating line of greatest height upon a given terrestrial meridian. The surface of the sea is divided by the meridians and parallels into rectangles whose areas are proportional to the cosines of their latitudes. The volume of the uncorrected equilibrium tide is found by multiplying the elementary areas into their respective thicknesses at the given time. The transparent sheet shows the thickness for the assumed time. The volume divided by the area shows how much the (uncorrected) equilibrium spheroid lies above the "corrected" equilibrium spheroid at the assumed component hour. At another hour it will have another value. These values tabulated with opposite signs will define a curve drawn once for all for the sea in question, which when added to the (uncorrected) equilibrium curve at any place will give the "corrected" equilibrium tide at that place.

* Obtained by analyzing the heavy curve shown in Plate III, App. BB, Report of the Survey of the Northern and Northwestern Lakes (1873).

So proceed with each of the important components. We may not completely separate the height into components if we, for a given declination of the moon, construct a stereographic projection with the moon distant δ from the bounding circle and the (uncorrected) equilibrium heights written upon it. But this process is less convenient than the former.

The same theory is expressed analytically after Thomson and Tait in the following manner:

If h or au denote the (uncorrected) equilibrium height of the tide, then

$$au - \alpha \tag{381}$$

will denote the "corrected" height, wherein

$$\alpha = \frac{\text{tidal volume over sea}}{\text{area of sea}}, \tag{382}$$

$$= \frac{a \iint u d\sigma}{\Omega} \tag{383}$$

where Ω = area of sea and the elementary area $d\sigma = \cos\lambda \, d\lambda \, dl$, and

$$u = \frac{3}{2}\frac{M}{E}\frac{a^3}{r^3}(\cos^2\theta - \tfrac{1}{3}). \tag{384}$$

This gives for the "corrected" height

$$\begin{aligned} au - \alpha = {} & \tfrac{3}{4}\frac{M}{E}\frac{a^4}{r^3}[(\cos^2\lambda\cos 2l - \mathfrak{A})\cos 2\psi + (\cos^2\lambda \sin 2l - \mathfrak{B})\sin 2\psi]\cos^2\delta \\ & + 3\frac{M}{E}\frac{a^4}{r^3}[(\sin\lambda\cos\lambda\cos l - \mathfrak{C})\cos\psi + (\sin\lambda\cos\lambda\sin l - \mathfrak{D})\sin\psi]\sin\delta\cos\delta \\ & + \tfrac{1}{4}\frac{M}{E}\frac{a^4}{r^3}(3\sin^2\lambda - 1 - \mathfrak{E})(3\sin^2\delta - 1), \end{aligned} \tag{385}$$

where

$$\mathfrak{A} = \frac{1}{\Omega}\iint \cos^2\lambda\cos 2l d\sigma, \qquad \mathfrak{B} = \frac{1}{\Omega}\iint \cos^2\lambda \sin 2l d\sigma,$$

$$\mathfrak{C} = \frac{1}{\Omega}\iint \sin\lambda\cos\lambda\cos l d\sigma, \qquad \mathfrak{D} = \frac{1}{\Omega}\iint \sin\lambda\cos\lambda\sin l d\sigma,$$

$$\mathfrak{E} = \frac{1}{\Omega}\iint (3\sin^2\lambda - 1)\, d\sigma.$$

In the integrations or quadratures for α, ψ and δ are regarded as constants, and so are taken from beneath the integration signs. This height may be written in the form

$$R_0[3\sin^2\delta - 1] + R_1 \sin 2\delta \cos[\psi - l - \varepsilon_1] + R_2\cos^2\delta\cos[2(\psi - l) - \varepsilon_2]. \tag{386}$$

CHAPTER V.

THE HARMONIC ANALYSIS OF TIDAL OBSERVATIONS.

ON THE SUMMATION OF HOURLY ORDINATES.

51. In the harmonic analysis it is convenient to consider *component days*, whose lengths are the periods of the various diurnal components or twice the periods of the semidiurnals.* Such days are divided into twenty-four equal parts called *component hours*. If the tidal curve be read at the component hours and sums made by combining for each hour all readings belonging to it, twenty-four sums will be obtained. These sums are then analyzed in the manner described in § 58. To avoid tabulating the curve for each kind of component time, the tabulation in mean solar time is made to serve for all. This is done by distributing the (solar) hourly heights among the component hours as nearly as possible. The speeds or periods of the components determine where the various component hours fall upon the solar hours. The manner being always the same for a given component, tables of such correspondences between component and solar hours may be prepared as follows: If we put $s_1 = 15°$ for the hourly speed of the mean sun or diurnal solar component, and c_1 for the speed of any other diurnal component, then

$$\frac{c_1}{s_1} = \frac{c_1}{15} \tag{387}$$

will represent the portion of any component hour corresponding to a solar hour. While this comparison of component and solar hours is only required to the nearest whole component hour, in order to secure even this degree of approximation throughout the hours of a whole year, it is desirable to carry the value of $\frac{c_1}{15}$ out to about eight decimal places. For all components, zero hour is always taken to coincide with zero hour of the first day of the series. By successive additions of $\frac{c_1}{15}$ the component hour corresponding to any solar hour may be found; the first solar hour of the first day of series corresponds to the $\frac{c_1}{15}$ component hour, the second solar hour to the $\frac{2\,c_1}{15}$ component hour, and the nth solar hour from the beginning to the $\frac{nc_1}{15}$ component hour. A half component hour will be lost or gained according as c_1 is less or greater than s, when

$$\tfrac{1}{2} \times \frac{s_1}{s_1 \sim c_1} = \frac{15}{30 \sim 2\,c_1} \tag{388}$$

solar hours shall have elapsed from the beginning; that is, the solar and component hours agree from the beginning of the series until this number of solar hours has been reckoned, when the component hour taken to the nearest whole hour will differ by one from the solar hour. At subsequent regular intervals of

$$\frac{s_1}{s_1 \sim c_1} = \frac{15}{15 \sim c_1} \tag{389}$$

solar hours, a whole component hour will be lost or gained, that is, the difference between component and solar hours will increase one at each such time. If $c_1 < s_1$, as is usually the case, two adjacent solar hours at one of these times fall upon the same component hour, i. e., within a half com-

* The length of a component day in solar hours may be found by dividing 360° by the speed per hour (c_1), Table 1.

ponent hour of the time aimed at; but if $c_1 > s_1$, a component hour will be skipped, because no solar hour occurs within a half component hour of it. In either case all the solar hours are represented by component hours, the maximum divergence being a half component hour. If the maximum divergence allowed be assumed to be a half solar hour, then all solar hours are not represented by component hours when $c_1 < s_1$; and when $c_1 > s_1$, a solar hour may occasionally be taken to represent each of two consecutive component hours.

The times when the differences between solar and component hours change, are given in Table 42, designated "Component hours derived from solar hours." In this table, the values on the left hand of *each column* denote mean solar hours, and those on the right hand show how much the numbering of these hours must be altered in order to obtain the corresponding numbering of the component hours. The component and solar hours, as we have seen, start together with zero hour at the beginning of the series, and, reckoned to the nearest whole component hour, they continue to agree until the first tabular value is reached, when the component hour is the sum or the difference (according to whether a plus or minus sign is used) of the two given values. After this the component hours continue to differ from the solar hours by the first right-hand value until the next tabular value is reached, when the difference becomes that right-hand value, which is to be used until the next given value, and so on. Whenever the value to be added to the solar hour is such that the sum is equal to or exceeds 24, the sum should be diminished by 24; and whenever the solar hour is less than the value to be subtracted from it, increase the solar hour by 24 before making the subtraction; it is unnecessary to keep track of the component days.

For the long period components, where the change during a solar hour is very small, it is proposed to use the daily sums of the hourly heights as the quantities to be operated upon, and Table 43 shows what component hour each one of the daily sums corresponds to, reckoned to the nearest whole component hour.

52. As an example of the use of Table 42, find the M hours on the fourth day of series corresponding to the first five hours of solar time. Entering the table for the fourth day of series and in the column M, one sees that for the second solar hour the difference between solar and M hours is -3, which difference will continue from that time until the next tabular value; but for that portion of the day preceding the second solar hour on the fourth day of series we must look to the tabular value next above, which is -2 at the twenty-first hour of the second day of series, and as this difference continues until the next tabular value, it is the difference for the first and second M hours required. The resulting M hours are therefore as shown above. It will be noticed that the first and second solar hours both correspond to the twenty-third M hour; this is due to using whole M hours, as may be seen by multiplying 0·9661368, which is the portion of an M hour corresponding to a solar hour, by the number of solar hours from the beginning of the series up to these hours, showing that on the fourth day the first solar hour corresponds to 22·53 M hours, while the second solar hour corresponds to 23·49 M hours.

Fourth day of series.	
Solar hours.	M hours.
0	22
1	23
2	23
3	0
4	1

Whenever the difference between the solar and component hour is such that it changes in a period less than a solar day, the table gives two or more columns to the component; but the above example will suffice to explain the use of the table even in such cases.

Having tabulated the component hours which most closely correspond to the solar hours, the hourly heights of any series to be analyzed may be distributed in accordance with this relation. This, however, is a laborious process, for it not only requires as many copies of the hourly heights as there are components sought, but each copy must have its heights arranged differently, according to the relation existing between the hours of the component being worked for and the solar hours, as shown by the table.

Instead of using a table, blank forms may be made out once for all indicating where the hourly heights are to be written. Darwin in his report for 1883 gives a sample of such form. He has since prepared and published a set of blank forms for eighteen kinds of summation. Before making a particular summation the hourly heights of the series to be analyzed are to be copied into the form in the way indicated by certain marks thereon. This method requires as many copies of the hourly heights as there are components to be worked for, but does away with the inconvenience of following a table to find the order of arrangement.

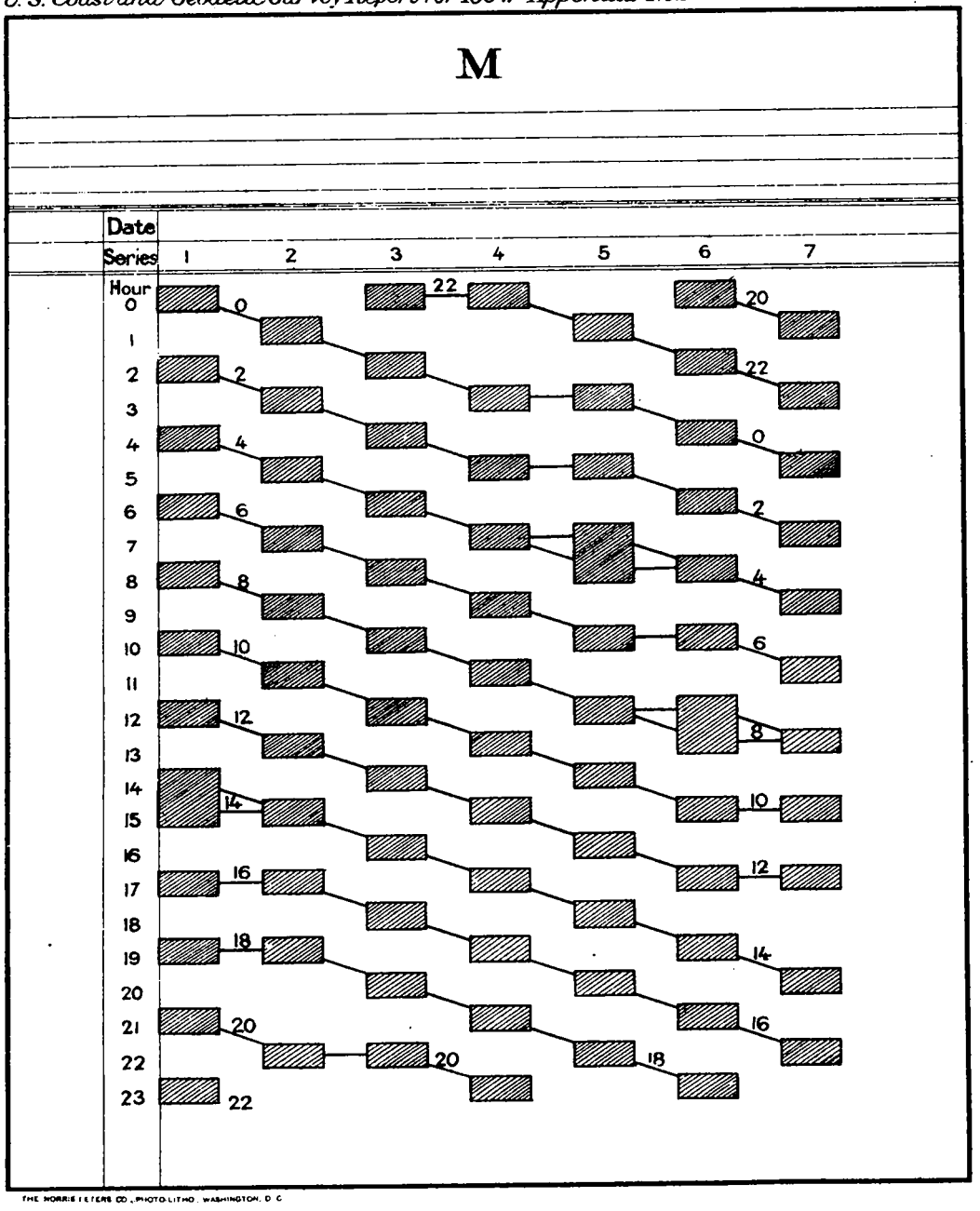

Fig. 11. Stencil for the M summation, sheet for the even hours.

Darwin* has recently devised a set of movable scales for saving labor in distributing the hourly heights for each component; but in matters of simplicity, convenience, cheapness, and rapidity of use, the apparatus does not compare favorably with the stencils described below.

53. *Stencils.*†

This term has been applied to a series of sheets so perforated as to mechanically indicate what observed hourly heights belong to the various component hours. Their use does away with the necessity of copying or rearranging the tabulated hourly heights.

Directions for constructing stencils for any given component.—Select blank forms similar to those upon which the hourly height to be summed have been tabulated. These forms should be so contrived as to cause the heights to stand sufficiently far apart from one another that no two of them can ever be seen through the same opening when a stencil is applied; the mere leaving of a large space in which to write each height will not answer, for the heights must be always found in a definite place, which may be designated by light ruled lines. In addition to the usual way of denoting the date by the day of the month, it is desirable to use a series of consecutive numerals, known as "days of series," which always begin with 1 on the first day of the record used and end so that its last value indicates the number of days taken. The stencil sheets, being intended for use upon any series, have merely the "days of series" upon them as dates. For the sake of clearness in using the stencils it has been found desirable to separate the component hours into even and odd, thus making two stencil sheets for each page of tabulation, and the sheets which thus constitute a pair must have the same days of series. Having thus prepared blank forms with a duplicate set of days of series, and having written the symbol of the component for which it is designed at the head of each page, turn to the table designated "Component hours derived from solar hours" and in the manner already explained proceed to make the blank forms into a table showing what component hour corresponds to each solar hour throughout the series, entering the even component hours on one blank and the odd hours on the other. Join those spaces containing the same component hours by a broken line, and write upon this line, at suitable distances, the number of the component hour it represents. The spaces where the component hours fall are then stamped with a steel punch which makes openings of sufficient size for showing the tabulated heights.

The accompanying figure shows the first seven days of the even hour of the M stencil. The portions inclosed with lines represent openings which are cut through the sheet so as to show the tabulated hourly heights to be summed, when the stencil is placed over them. The size of these sheets is governed by the size used in tabulating the hourly heights. The marginal arguments are the solar days of the series and the solar hours, reckoned from midnight. The broken lines joining openings show that the heights appearing through all openings so connected are to be added together, and each such sum belongs to the M hour written upon the line.

It is generally desirable, particularly in summing for smaller components, to so omit or repeat certain hourly heights that each component hour of the period covered receive one, and but one, hourly height; in other words, to make the maximum divergence between the two kinds of time a half solar, instead of a half component, hour. To construct stencils suitable for this purpose use the same table as before, omitting the unmarked hours when $c<s_1$, but repeating the marked hours when $c_1>s_1$. By marked values are meant those pointed out by the arrow, Table 42.

Directions for using the stencils.—The stencils are to be applied one sheet at a time to the tabulated hourly heights. Care must be taken to see that the proper sheet is applied in each instance, which is done by making the days of series upon the stencils agree with the corresponding days upon the sheets of hourly heights. The stencil must be placed carefully so as to accurately coincide with the tabulation beneath it, using paper weights to hold it in position while making the summations. If a broken line for any component hour runs out at the top or bottom of the stencil, there will in general be another portion of the same hour on the opposite edge, which should be included in taking the sum. As the hourly heights are summed through the stencil openings for each component hour, the sums are set down in a suitable form having the 24 component hours and pages of the tabulated heights as arguments. After all the stencils have been applied,

* B. A. A. S. Report, 1892, pp. 345-389.

† See United States Coast and Geodetic Survey Report, 1893, I, p. 108. Also this manual, Part I, § 145.

the sums for each component hour on the summation form, are combined into a single sum for each of the 24 component hours throughout the period of observation used. The divisors for these final sums are obtained by counting the number of openings in the stencils for each component hour; and as a convenience these divisors may be written, once for all, on the left margin of the stencils, or given in a table. The twenty-four means thus obtained may then be converted into residuals by subtracting from each the mean of all, and these residuals are analyzed in the way explained under harmonic analysis; or, the twenty-four means may be analyzed directly.

Sum checks.—Each page of the hourly heights of the sea should be summed horizontally and vertically before any of the stencils are applied. Any stencil sum for the whole page (adding together the sums belonging to the odd and even hours) should be the same as the sum of the vertical columns or horizontal lines, provided all hourly heights are used once and but once. But when stencils are constructed with reference to the marked values of Table 42 an additional or third stencil sheet should accompany each pair which will point out the hourly heights omitted or used twice according as $c_1 \lesseqgtr s$. The sum obtained by aid of this sheet must be added to or subtracted from the total sum obtained from the even and odd hour sheets in order to check the work.

For a component like K, P, R, or T, whose speed differs little from that of S, lines joining the openings will frequently become horizontal. When this happens openings should be made in the right-hand margin of the stencil sheets, so that the horizontal sums already made may be simply copied upon the proper component hours. In this connection see § 66.

54. *Adding machines.*

Several varieties of adding machines are used by the Survey in making these and other summations, viz., the "Comptometer" and the "Comptograph," manufactured by the Felt & Tarrant Manufacturing Company, Chicago, Ill.; the "Burroughs Registering Accountant," by the American Arithmometer Company, St. Louis, Mo., and a computing machine made by A. Burkhardt, Glashütte, Germany. The machine last mentioned is designed more especially for multiplication and division.

55. *A proposed machine for obtaining component sums.*

Having seen that the stencils mechanically point out where the hourly values must go in making up the partial sums, the idea naturally suggests itself of having the equivalent of stencils so control a registering apparatus as to simultaneously give all the required summations.

Let there be as many cylinders—each, say, 26 inches long and 10 inches in diameter—as there are independent summations to be made. Each cylinder will represent the stencil of a single component for, say, 370 days. The circumference of each cylinder should be divided into 370 equal parts, each division fixing a line or element which represents a day. All cylinders are supposed to have a common movement in the direction of their axes an inch or so in extent for bringing the holes about to be mentioned, into their proper positions for the various hours of the day. Each day line contains 24 holes in the surface of the cylinder, determined by the correspondence between solar and component hours for the day in question, the small movement along the axis having been taken into account. The recording or adding apparatus for each kind of summation consists of two series of toothed wheels, all wheels of a series being upon a common shaft. The number of teeth upon each wheel of the first series may be taken as 300, and of the second series 299. The number of wheels in each series is 25, one for each component hour and one for those few hourly heights which are used only in checking the sums of the 24 partial sums. The number of revolutions made by the 300-tooth wheels can be found by subtracting the readings of the 300 tooth wheels from the readings of the 299-tooth wheels. The parts of revolutions are, of course, the direct readings.

The cylinders are placed side by side in a horizontal frame, all axes being parallel. This frame is supported by a table or framework and is capable of the small amount of motion already referred to. All cylinders are made to rotate together by means of a rack and spur wheels.

Above these cylinders, or above the intervening spaces, the two sets of toothed wheels serving as counters are mounted. The shafts bearing the 300-tooth wheels can all be made to rotate the same amount by means of parallel rods and cranks. The operator imparts motion to the mechanism by means of a crank at one end of the framework. This carries a pointer which,

moving over a graduated dial, indicates the amount of its rotation and of the 300-tooth wheels, which are not held fast by the levers about to be mentioned; that is, it indicates what number or hourly height is being entered. The crank can be released and returned to its initial position without causing any of the shafts to rotate.

The cylinders control the 300-tooth wheels by means of levers, one for each wheel. The 25 levers for each component are upon a common axis parallel to the axis of the cylinder. At one end of each lever is a needle-like projection for entering the perforations in the surface of the cylinder, while at the other end is a sharp edge, extending upward, for engaging the wheel above, thereby preventing its rotation. Since the preventing of a wheel from revolving with its shaft must give rise to friction and wear, it seems best to stop but one out of each 25 rather than to stop 24 of them. This involves no extra work on the part of the operator except the subtracting of the final machine readings from a constant number—the grand total of all hourly heights.

For each succeeding day, the cylinders are all turned forward one notch; and for each succeeding hour of the day, they are all carried forward automatically a small but constant amount along the line of their axes. As already intimated, the hourly heights when entered once are to be simultaneously summed in all the kinds of summations required in analysis, thus enabling a person to sum for all components almost as quickly as he now sums for one upon an ordinary adding machine. This machine is designed to take the place of an harmonic analyzer in tidal work. Its merits are its positive workings, the great number of components which can be included, and its simplicity of construction, in that hundreds of its parts are exactly alike.

56. *The Thomson harmonic analyzer.*

The immediate object of the harmonic analyzer is to determine the coefficients $H_0, A, \bar{A}, B, \bar{B}, C, \bar{C}, \ldots$ from the observed tidal curve, whose equation may be written

$$\begin{aligned} y = H_0 &+ A\cos at + B\cos bt + C\cos ct + \ldots \\ &+ \bar{A}\sin at + \bar{B}\sin bt + \bar{C}\sin ct + \ldots \end{aligned} \tag{390}$$

The average value of y is

$$\frac{1}{t}\int_{t=0}^{t=t} y\,dt. \tag{391}$$

Replacing y by its value given above the result is readily integrated, giving

$$\begin{aligned} \frac{1}{t}\Big[H_0 t &+ \frac{A}{a}\sin at + \frac{B}{b}\sin bt + \frac{C}{c}\sin ct + \ldots \\ &- \frac{\bar{A}}{a}\cos at - \frac{\bar{B}}{b}\cos bt - \frac{\bar{C}}{c}\cos ct - \ldots \Big]. \end{aligned} \tag{392}$$

When t is large, the average value of y approaches H_0. Any planimeter which enables one to find the area of the curve, and so the average value of y, can be used for finding the value of H_0. For instance, if a disk rotate uniformly with t, and has upon its face a small friction wheel whose axis intersects the axis of the disk perpendicularly, and if this friction wheel be moved inward and outward according to the value of y at each instant, the number of rotations of the friction wheel will be proportional to the area of the curve.

Suppose that the rotation or angular velocity of the disk be a more complicated function of the time than t multiplied by a constant, say $\int_0^t \phi(t)\,dt$. Let the equation of the ordinate of the curve be $y = \psi(t)$. Now, if the rotation of the disk be proportional to the ordinate of a curve whose equation is

$$y' = \int_0^t \phi(t)\,dt, \tag{393}$$

the number of revolutions of the friction wheel will be proportional to

$$\int_0^t \psi(t)\,\phi(t)\,dt.* \tag{394}$$

* Thomson and Tait's Natural Philosophy, Part I, pp. 493–495, and Proc. Roy. Soc., Vol. 24 (1876), pp. 266–268.

For, in the place of $k\,t$ we now have $\int_o^t \phi\,(t)\,d\,t$, k being a constant, and so in the place of $k\,d\,t$, $\phi\,(t)\,d\,t$. In the harmonic analysis of the tide curve $y = \psi(t)$, the function ϕ, as will be presently explained, is of the form

$$\phi(t) = \begin{matrix}\sin \\ \cos\end{matrix}\,(nt), \tag{395}$$

and so $y' = \int_o^t \phi\,(t)\,d\,t$ is of the form

$$y' = -\frac{1}{n}\cos\,(nt) \text{ or } \frac{1}{n}\sin\,(nt). \tag{396}$$

That is, the rotation of the disk is to have a simple harmonic motion instead of a uniform rotary motion. In this case the reading obtained will be, when multiplied by a proper factor, the values

$$\int_o^t y\cos\,at\,dt, \text{ or } \int_o^t y\sin\,at\,dt. \tag{397}$$

Writing for y its value (390) and integrating, the connection between the values of these integrals and $\bar{A}$, $\bar{\bar{A}}$, respectively, becomes known. For a large value of t, the number of revolutions of the friction wheel are proportional to $\bar{A}$ or $\bar{\bar{A}}$. In like manner for determining $\bar{B}$ or $\bar{\bar{B}}$ we have to mechanically evaluate the integral

$$\int_o^t y\cos\,bt\,dt, \text{ or } \int_o^t y\sin\,bt\,dt. \tag{398}$$

So on for all the other components. Since the speed ratios a, b, c . . . are constant, and since y is the same in all integrals, it becomes possible to evaluate all integrals simultaneously by having an integrator for each coefficient H_o, $\bar{A}$, $\bar{\bar{A}}$, $\bar{B}$, $\bar{\bar{B}}$, $\bar{C}$, $\bar{\bar{C}}$, etc. In fact, the friction wheel in each will be displaced from the center of the disk the same amount at any given instant of time, and suitable gears can be provided for imparting angular velocities proportional to a, b, c, etc., while the harmonic or reciprocating motion can in each case be obtained by means of a pin working in a slot perpendicular to the required motion. The rectilinear harmonic motion is converted into circular harmonic by means of a rack and toothed sector.

The disk, globe, and cylinder integrator, the invention of Prof. James Thomson, has as its peculiar merit, the avoiding of the sliding motion of the friction wheel along the diameter of the disk.* A sphere replaces the friction wheel. It is moved outward and inward along a diameter of the disk by means of a forked guide. The motion to be recorded is that which takes place perpendicularly to the radii of the disk; it is indicated by the number of revolutions of a cylinder turned by the sphere. The disk is inclined to the horizontal at an angle of about 45°; the recording cylinder turns freely upon its axis which is parallel to the plane of the disk. The sphere by its own weight crowds against the disk and cylinder. As it rolls along a diameter of the disk and an element of the cylinder, its center describes a straight line parallel to the axis of the cylinder. The ordinate of the curve shows how far the ball is to be moved.

A series of these integrators properly connected constitute the Thomson harmonic analyzer. They are arranged in a horizontal row. The point which follows the tide curve as the marigram is passed over a cylinder is fixed on a long horizontal rod. The rod has as many fork-like projections for moving the balls as there are integrators in the machine.

A working model of the first analyzer was exhibited by Sir William Thomson before the Royal Society on the 9th of May, 1878. This consisted of five disk, globe, and cylinder integrators. It served for finding H_o, $\bar{A}$, $\bar{\bar{A}}$, $\bar{B}$, $\bar{\bar{B}}$, where $b = 2\,a$. This is described in the Proceedings of the Society, Volume 27 (1878), pages 371–373. It was soon turned over to the Meteorological Office.

* Thomson and Tait's Natural Philosophy, Part I, pp. 488–492, 505–508.

The first analyzer for actual service was constructed, probably in 1879 and 1880, upon the recommendation of the Meteorological Council. A description of the machine may be found in Engineering for December 17, 1880; also in the Proceedings of the Royal Society, Volume 40 (1886), pages 382–392, where will be found tests of its working. There are seven disk, globe, and cylinder integrators for finding H_0, A, $\bar{A}$, B, $\bar{B}$, C, $\bar{C}$, where $b=2a$, $c=3a$.

The second harmonic analyzer was designed for analyzing tides. It is provided with eleven disk, globe, and cylinder integrators, and serves to determine the coefficients of five principal tidal components. Here $a=m_2$, $b=s_2$, $c=k_1$, $d=o_1$, $e=p_1$.

A description of this machine is given in Volume 65 of the minutes of the Proceedings of the Institution of Civil Engineers, and in Popular Lectures and Addresses, by Sir William Thomson, Volume III, pages 177–183.

57. *Augmenting factors.*

If the observations used in finding any particular ordinate of a component do not fall exactly upon it, but constitute a group scattered (uniformly) over some distance on either side, the resulting mean value will be a trifle smaller (numerically) than the true ordinate.

Let any component C be represented by the curve

$$y = C \cos (ct + \gamma). \tag{399}$$

The mean value of y between the times $t - \frac{\tau}{2}$ and $t + \frac{\tau}{2}$ (i. e., over a group τ solar hours in length) is

$$\frac{2 \sin \frac{c\tau}{2}}{c\tau} C \cos (ct + \gamma), \tag{400}$$

and so the augmenting factor is

$$\frac{\pi}{180} \frac{c\tau}{2 \sin \frac{c\tau}{2}}, = \frac{\text{arc } c\tau}{\text{chord } c\tau}. \tag{401}$$

Since this factor applies to any ordinate of the component curve, it applies to the amplitude (C) or to the components of the amplitude (C, $\bar{C}$).

If in the summation of hourly ordinates for the short period tides, the extent of each group is a component hour (the S series excepted), then

$$\tau = 1 \text{ solar hour} \times \frac{15^\circ}{c_1}. \tag{402}$$

when $c = c_1$, the factor becomes

$$\frac{\text{arc } 15^\circ}{2 \sin 7^\circ 30'}; \tag{403}$$

when $c = c_2 = 2\, c_1$, the factor becomes

$$\frac{\text{arc } 30^\circ}{2 \sin 15^\circ}; \tag{404}$$

and so on.

The following table applies to all short period components, excepting the S series where no augmentation is required, if the sums be so taken that each hourly height of the original tabulation is used once and once only. The value of τ is one component hour.

Subscript.	Augmenting factor.	Logarithm.
1	1·00286	0·0012403
2	1·01152	0·0049745
3	1·02617	0·0112193
4	1·04720	0·0200296
5	1·07513	0·0314610
6	1·11072	0·0456046
7	1·15497	0·0625707
8	1·20920	0·0824980

If τ be a solar hour, as is the case when each component hour of the observation period receives one and but one hourly height, the augmenting factors for the various components differ somewhat from one another, the difference depending upon the difference of speed.

Their values are given in Table 38.

If 48 half-hourly heights be tabulated each day, and if the 24 component hours be scattered among these 48 times as nearly as possible in constructing the stencils or making the summation, then $\tau = \frac{1}{2}$ solar hour in the expression (401) for the augmenting factor.

THE ANALYSIS.

58. As already stated in § 49, Part I, the most probable values of the unknown quantities in the equation

$$h = H_0 + A_1 \cos at + \bar{A}_1 \sin at + A_2 \cos 2\,at + \bar{A}_2 \sin 2\,at + \quad . \quad . \quad . \tag{405}$$

where $at = 0°, 15°, 30°, \quad . \quad . \quad . \quad 345°$, are

$$H_0 = \tfrac{1}{24}\Sigma h, \quad A_1 = \tfrac{1}{12}\Sigma h \cos at, \quad \bar{A}_1 = \tfrac{1}{12}\Sigma h \sin at,$$

$$A_2 = \tfrac{1}{12}\Sigma h \cos 2\,at, \quad \bar{A}_2 = \tfrac{1}{12}\Sigma h \sin 2\,at,$$

$$. \quad . \quad . \quad . \quad . \quad . \quad . \quad . \quad . \quad . \quad ;^* \tag{406}$$

It may be well to here verify this statement.

There are 24 values of h, viz., $h_0, h_1, h_2, \quad . \quad . \quad . \quad h_{23}$, given by the 24 partial or hourly sums, corresponding to $at = 0°, 15°, 30°, \quad . \quad . \quad . \quad 345°$, i. e., to the 24 component hours. By writing equation (405) in these 24 forms, one under the other, beginning with $at = 0°$, we have

$$1 \cdot H_0 + \cos 0° A_1 + \sin 0° \bar{A}_1 + \cos 2\,(0°) A_2 + \sin 2\,(0°) \bar{A}_2 + \quad . \quad . \quad . \quad - \quad h_0 = 0,$$

$$1 \cdot H_0 + \cos 15° A_1 + \sin 15° \bar{A}_1 + \cos 30° A_2 + \sin 30° \bar{A}_2 + \quad . \quad . \quad . \quad - \quad h_1 = 0,$$

$$. \quad . \quad . \quad . \quad . \quad . \quad . \quad . \quad . \quad . \quad . \quad . \quad . \quad . \quad . \quad . \quad . \quad . \quad . \quad . \tag{410}$$

The normal equations are linear equations in the unknown quantities $H_0, A_1, \bar{A}_1, \quad . \quad . \quad .$, having for coefficients the sums of the products of the coefficients of (410) properly taken in pairs

---

* Since the period of h is divided into twenty-four equal parts, $A_i = \frac{1}{12}\Sigma h \cos iat$, is twice the average value of the function $h \cos iat$. When the period is supposed to be divided into a large number of parts this value becomes

$$A_i = \frac{1}{\pi}\int_{at=0}^{at=360} h \cos iat \, d(at) = \frac{1}{\pi}\int_{at=-180}^{at=180} h \cos iat \, d(at). \tag{407}$$

Similarly

$$\bar{A}_i = \frac{1}{\pi}\int_{at=0}^{at=360} h \sin iat \, d(at) = \frac{1}{\pi}\int_{at=-180}^{at=180} h \sin iat \, d(at). \tag{408}$$

Fourier's series. In general, if at be the independent variable of an arbitrary function f (not necessarily periodic as is h), we have

$$f(at) = \frac{A_0}{2} + A_1 \cos at + A_2 \cos 2\,at + \quad . \quad . \quad .$$

$$+ \bar{A}_1 \sin at + \bar{A}_2 \sin 2\,at + \quad . \quad . \quad . \tag{409}$$

where

$$A_i = \frac{1}{\pi}\int_{at=-\pi}^{at=\pi} f(at) \cos iat \, d(at),$$

$$\bar{A}_i = \frac{1}{\pi}\int_{at=-\pi}^{at=\pi} f(at) \sin iat \, d(at),$$

provided

$$-\pi < at < \pi.$$

according to the usual rule.* Then (§ 27) because the average value of the sine or cosine of an angle successively falling on all parts of the circumference is zero, and that of $(\sin)^2$ or $(\cos)^2$ equal to $\frac{1}{2}$, the normal equations reduce to equations (406) above.

The form "Harmonic analysis of tides," § 61, is for facilitating the work indicated by these normal equations. In the form, c_1, s_1 are written instead of $\bar{A}_1$, $\bar{\bar{A}}_1$; c_2, s_2 instead of $\bar{A}_2$, $\bar{\bar{A}}_2$; and so on, because upon that sheet it is not necessary to have the symbol designate the component in any way, and so the same form answers for all components.

The following symbols without subscripts apply to any component. But when it is desired to distinguish between diurnals and semidiurnals, for instance, the symbols take the subscripts 1 and 2.

n denotes the speed of any component.

$V+u$ are together the whole argument of the partial tide according to the equilibrium theory; i. e., $V+u$ is the phase of such tide provided its interval $\varkappa/n$ happens to be zero.

V is the portion of $V+u$ varying uniformly with the time.

$-\zeta$ is the initial phase of the component tide; i. e., the phase when $t=0$.

ζ/n is the time which must elapse between the beginning of the series and the first high water of the partial tide.

$\varkappa/n$ is the interval or time between the action of the assumed cause of the partial tide and the occurrence of its high water.

$\varkappa$ is the interval expressed in degrees; it denotes the hour angle of the fictitious moon, § 24, at the time of high water of the partial tide.

H is the mean value of the amplitude of any partial tide.

R is the amplitude of any partial tide during the period analyzed.

$$c = R\cos\zeta,$$
$$s = R\sin\zeta.$$

f is the factor by which the constant H must be multiplied, chiefly on account of the variability of the lunar orbit to the plane of the equator, in order to give the amplitude R.

F is the reciprocal of f.

If it is desired to specify the several components, then the above should generally be replaced by other symbols

$$\begin{aligned}
n &= a, b, c, \ldots ; \\
V+u &= \arg A, \arg B, \arg C, \ldots ; \\
\zeta &= \zeta(A), \zeta(B), \zeta(C), \ldots , \text{or} \\
-\zeta &= \alpha, \beta, \gamma, \ldots ; \\
\varkappa &= A^\circ, B^\circ, C^\circ, \ldots ; \\
H &= A, B, C, \ldots ; \\
R &= A', B', C', \ldots \dagger , \text{or} \\
&= R(A), R(B), R(C) \ldots ; \\
f &= f(A), f(B), f(C) \ldots ; \\
c &= \bar{A}', \bar{B}', \bar{C}', \ldots ; \\
s &= \bar{\bar{A}}', \bar{\bar{B}}', \bar{\bar{C}}', \ldots .
\end{aligned} \tag{411}$$

59. *Ferrel's method of eliminating the effects of components other than the one sought.*

In his "Discussion of tides in Penobscot Bay," Report for 1878, Ferrel takes into account the fact that wherever the series is cut off in summing for any particular component, the hourly

* See § 28, or any text-book on least squares.

† Cf. Ferrel, Tidal Researches, § 97.

sums, and so the resulting phase and amplitude, are affected by the presence of other components. It is assumed that the diurnals when analyzed are free from the semidiurnals, quarter diurnals, etc.; similarly, that the semidiurnals are free from diurnals, quarter diurnals, etc. The amount of disturbance in a diurnal component due to another diurnal, is supposed to depend upon the length of the series and the difference in the initial phases of the two waves; similarly for any two semidiurnals. If the initial phases were each taken into account, instead of the difference merely, an additional argument would be required in the tabulation of the corrections; but it is only necessary to make analyses of hourly sums cut off at various places, in order to convince one's self that the additional argument is wholly unnecessary for a series a month or more in length.

The height of the tide, or surface of the sea, at any time may be written

$$H_0 + A\cos(at+\alpha) + B\cos(bt+\beta) + C\cos(ct+\gamma) + \quad . \quad . \quad . \tag{412}$$

or

$$H_0 + \bar{A}_c\cos at + \bar{\bar{A}}_c \sin at \tag{413}$$

where

$$\bar{A}_c = A\cos\alpha, + B\cos(\overline{b-a}t+\beta) + C\cos(\overline{c-a}t+\gamma) + \quad . \quad . \quad . \quad , \tag{414}$$

$$\bar{\bar{A}}_c = -A\sin\alpha, - B\sin(\overline{b-a}t+\beta) - C\cos(\overline{c-a}t+\gamma) + \quad . \quad . \quad . \quad . \tag{415}$$

Subscript c indicates that quantities relating to the component A have not been purified of any of the usually small disturbances due to B, C, ...

If we put

$$\bar{A} = A\cos\alpha, \qquad \bar{\bar{A}} = -A\sin\alpha, \tag{416}$$

then from (414) and (415),

$$\bar{A}_c = \bar{A} - \delta\bar{A}, \therefore \bar{A} = \bar{A}_c + \delta\bar{A}; \tag{417}$$

$$\bar{\bar{A}}_c = \bar{\bar{A}} - \delta\bar{\bar{A}}, \therefore \bar{\bar{A}} = \bar{\bar{A}}_c + \delta\bar{\bar{A}}. \tag{418}$$

Let

$$\alpha = \alpha_c + \delta\alpha \tag{419}$$

then

$$\tan\alpha = \tan(\alpha_c + \delta\alpha) = -\frac{\bar{\bar{A}}}{\bar{A}} = -\frac{\bar{\bar{A}}_c + \delta\bar{\bar{A}}}{\bar{A}_c + \delta\bar{A}}. \tag{420}$$

The next step is to find the values of $\delta\bar{A}$, $\delta\bar{\bar{A}}$ for a series τ hours in length. Since the heights are read at all times from $t=0$ to $t=\tau$, $\bar{A}_c$ and $\bar{\bar{A}}_c$ will be increased or decreased because of the components B, C, . . . , according to the length of the series. The average value of $B\cos(\overline{b-a}t+\beta)$ between $t=0$ and $t=\tau$ is

$$B\frac{1}{(\overline{b-a})\tau}[\sin(\overline{b-a}\tau+\beta) - \sin\beta],^* \tag{421}$$

which may be written

$$\frac{\sin\frac{1}{2}(b-a)\tau}{\frac{1}{2}(b-a)\tau} B\cos[\tfrac{1}{2}(b-a)\tau+\beta]; \tag{422}$$

$$\therefore -\delta A = \frac{\sin\frac{1}{2}(b-a)\tau}{\frac{1}{2}(b-a)\tau} B\cos[\tfrac{1}{2}(b-a)\tau+\beta] + \frac{\sin\frac{1}{2}(c-a)\tau}{\frac{1}{2}(c-a)\tau} C\cos[\tfrac{1}{2}(c-a)\tau+\gamma] + \quad . \quad . \quad . \quad . \tag{423}$$

In like manner the average value of $B\sin(\overline{b-a}t+\beta)$ is

$$-\frac{B}{(\overline{b-a})\tau}[\cos(\overline{b-a}\tau+\beta) - \cos\beta], \tag{424}$$

* This holds for any value of τ because the height of the tide wave is of necessity a single-valued function of t.

which is equal to

$$\frac{\sin \frac{1}{2}(b-a)\tau}{\frac{1}{2}(b-a)\tau} B \sin [\tfrac{1}{2}(b-a)\tau + \beta]. \tag{425}$$

$$\therefore + \delta\bar{\bar{A}} = \frac{\sin \frac{1}{2}(b-a)\tau}{\frac{1}{2}(b-a)\tau} B \sin [\tfrac{1}{2}(b-a)\tau + \beta]$$

$$+ \frac{\sin \frac{1}{2}(c-a)\tau}{\frac{1}{2}(c-a)\tau} C \sin [\tfrac{1}{2}(c-a)\tau + \gamma] + \quad . \quad . \quad . \quad . \tag{426}$$

In finding the effects of B, C, . . . upon the amplitude and phase of A we are concerned only with the length of the series; let us therefore suppose the initial phase of A_c, that is α_c, to be zero; then $\bar{\bar{A}}_c = 0$, $\bar{A}_c = A_c$.

$$\therefore \tan \delta\alpha = -\frac{\delta\bar{\bar{A}}}{A_c + \delta\bar{A}}; \text{ or, } \tan \delta\zeta = \frac{\delta\bar{\bar{A}}}{R_c(A) + \delta\bar{A}} \tag{427}$$

where

$$\zeta_c(A) + \delta\zeta = \zeta(A). \tag{428}$$

$$A = \frac{A_c + \delta\bar{A}}{\cos \delta\alpha}; \text{ or, } R(A) = \frac{R_c(A) + \delta\bar{A}}{\cos \delta\zeta} \tag{429}$$

The required values of δA, $\delta\bar{\bar{A}}$ are easily determined. At a time when $\alpha_c = 0$, β becomes $\beta - \alpha_c$ and γ, $\gamma - \alpha_c$. $\therefore -\delta\bar{A}$ and $\delta\bar{\bar{A}}$ may be written

$$-\delta\bar{A} = + \frac{\sin \frac{1}{2}(b-a)\tau}{\frac{1}{2}(b-a)\tau} B \cos [\tfrac{1}{2}(b-a)\tau + \zeta_c(A) - \zeta(B)]$$

$$+ \frac{\sin \frac{1}{2}(c-a)\tau}{\frac{1}{2}(c-a)\tau} C \cos [\tfrac{1}{2}(c-a)\tau + \zeta_c(A) - \zeta(C)] + \quad . \quad . \quad . \quad , \tag{430}$$

$$\delta\bar{\bar{A}} = \frac{\sin \frac{1}{2}(b-a)\tau}{\frac{1}{2}(b-a)\tau} B \sin [\tfrac{1}{2}(b-a)\tau + \zeta_c(A) - \zeta(B)]$$

$$+ \frac{\sin \frac{1}{2}(c-a)\tau}{\frac{1}{2}(c-a)\tau} C \cos [\tfrac{1}{2}(c-a)\tau + \zeta_c(A) - \zeta(C)] + \quad . \quad . \quad . \quad . \tag{431}$$

Special case.—Suppose that we are concerned with two waves, A and B, whose speeds are exactly equal. Then formulæ (430) and (431) give

$$-\delta\bar{A} = B \cos [\zeta_c(A) - \zeta(B)], \tag{432}$$

$$\delta\bar{\bar{A}} = B \sin [\zeta_c(A) - \zeta(B)]. \tag{433}$$

These values substituted in (427) and (429) clear the A of the effects of B.

Table 41 is given for the purpose of showing how the disturbing effects may be tabulated once for all for an observation period of fixed length. Somewhat smaller effects could have been obtained by selecting lengths suitable for the several components, but covering nearly the same period. The length best adapted to the determination of a particular component would generally be a synodic period of that component with one or more of the largest components of its class, i. e., with diurnals or semidiurnals according as the component is diurnal or semidiurnal.

Each tabular value consists of two parts, the first is the amplitude, or the numerical value of

$$\frac{180}{\pi} \frac{\sin \frac{1}{2}(b-a)\tau}{\frac{1}{2}(b-a)\tau}, \text{ or } 57{\cdot}29578 \frac{\sin (b-a)\frac{\tau}{2}}{(b-a)\frac{\tau}{2}}; \tag{434}$$

the second is the angle

$$\tfrac{1}{2}(b-a)\tau \tag{435}$$

but with multiples of 180° rejected or added so as to leave the angle between 0 and +360° and,

when substituted in the numerator, to render the above amplitude positive; when π is written underneath it indicates that an odd multiple of 180° has been rejected or added.

It will be noticed that the amplitude (A_c) and phase (α_c) of the component sought are taken as they come out from the analysis; while for the components (B, C, . . .) whose effects are to be eliminated, the best amplitudes and phases obtainable are to be used. In the above work A, B, C, . . . denote the R's of A, B, C, . . . instead of the H's, and this fact may be signified by accenting the A, B, C, ...

60. *The effect of a short-period component upon daily mean sea level.*

By "daily mean sea level" we shall generally imply that the 24 hourly heights corresponding to 0^h, 1^h, 2^h, . . . 23^h are simply added together and the mean taken. The value will obviously pertain to $11^h\ 30^m$ a. m. instead of noon. The sum or mean could be made to pertain to noon by including the 0^h value of the next day, in which case half weight should be given to this value and half to the 0^h value of the day in question.

Let the equation of the short-period wave be

$$y = A \cos (at + \alpha) \tag{436}$$

in which the time is supposed to be reckoned from 0^h a. m. of the first day of the series as usual.

The average height of the surface of the sea for any day (rth day of series) is, so far as dependent upon A,

$$y_r = \frac{A}{24a} 2 \cos \left[(24\ r - 1\ a) + 11\tfrac{1}{2}\ a + \alpha \right] \sin 12a \tag{437}$$

since t is taken between $24\ (r-1) - \frac{1}{2}$ and $24\ (r-1) + 23\frac{1}{2}$ hours. This is rendered a maximum or minimum according as $\sin 12a$ is positive or negative by putting

$$\alpha = -24a\ (r-1) - 11\tfrac{1}{2}a; \tag{438}$$

this gives for the maximum elevation or depression

$$y_r = \frac{A}{24a} 2 \sin 12a.$$

Assuming that $24a$ is not far from some multiple of 360°, equation (437) may be represented by a curve whose abscissæ are proportional to $24\ (r-1) + 11\frac{1}{2}$. The amplitude of this long-period wave, which we may for the present call L, is

$$\frac{A}{24a} | 2 \sin 12a |; \tag{439}$$

the speed is

$$s \sim a;$$

the phase is

$$\lambda = \alpha \text{ [and so } \zeta\ (L) = \zeta\ (A)\text{]}, \tag{440}$$

when sin 12 a is positive, and

$$\lambda = \alpha \pm 180° \text{ [and so } \zeta\ (L) = \zeta\ (A) \pm 180°\text{]} \tag{441}$$

when sin 12 a is negative.

Again, suppose that α' represents the phase of A at *any* given midnight. The mean of the 24 hourly heights for the following day is, § 27,

$$\tfrac{1}{24} \sum_{t=0}^{t=23} A \cos (at + \alpha') = \frac{A \sin 12a}{24 \sin \frac{1}{2}a} \cos (11\ \tfrac{1}{2}a + \alpha'); \tag{442}$$

that is, discrete intervals increase the value of L.*

The following mechanical means of determining the average height of the sea for any given day has been suggested by Prof. J. C. Adams:†

* See Laska, Sammlung von Formeln, pp. 409, 417. † Report B. A. A. S., 1883, p. 104. Or §§ 68, 69, below.

The value of y, the average daily height for midnight preceding the rth day, dependent upon several short period components A, B, . . . is

$$y = \frac{A \sin 12a}{24 \sin \frac{1}{2}a} \cos [24\sqrt{r-1}\, a + \alpha] + \frac{B \sin 12b}{24 \sin \frac{1}{2}b} \cos [24\sqrt{r-1}\, b + \beta] + \ . \ . \ . \ , \quad (443)$$

or if i be written for $r - 1$

$$y = \frac{A \sin 12a}{24 \sin \frac{1}{2}a} \cos [24ia + \alpha] + \frac{B \sin 12b}{24 \sin \frac{1}{2}b} \cos [24ib + \beta] + \ . \ . \ . \quad (444)$$

while the expression for the height of the tide at any time is

$$y = A \cos (at + \alpha) + B \cos (bt + \beta) + \ . \ . \ . \ . \quad (445)$$

If a tide predictor which mechanically sums (445) when the amplitudes introduced into it are A, B, . . . , be set with amplitudes

$$\frac{A \sin 12a}{24 \sin \frac{1}{2}a}, \frac{B \sin 12b}{24 \sin \frac{1}{2}b}, \ . \ . \ . \quad (446)$$

and with phases

$$\alpha = \arg_0 A - A^\circ, \ \beta = \arg_0 B - B^\circ, \ . \ . \ . \ , \quad (447)$$

(to any of which 180° should be applied when the amplitude (446) is negative) it will give at $11^h\ 30^m$ of each day the average value of the 24 hourly heights of that day so far as these heights depend upon A, B, ...

61. *Example showing the application of the harmonic analysis.*

Hourly tidal ordinates.

Station, Sitka, Alaska. Lat. 57° 4′ N.; long. 135° 20′ W.
Observer, Fremont Morse. Date, 1893.
Tabulator, A. F. Z. Tide gauge No. 34; scale, $\frac{1}{8}$.
Kind of time used, mean local civil. Readings are reduced to staff.

Day of month.	July 1	2	3	4	5	6	7	Horizontal sums.
Day of series.	1	2	3	4	5	6	7	
h. m.	*Feet.*	*Feet.*	*Feet.*	*Feet.*	*Feet.*	*Feet.*	*Feet.*	
0 00	13·9	13·1	11·6	10·0	8·4	7·3	6·8	71·1
1 00	14·5	14·1	13·0	11·4	9·6	8·0	6·7	77·3
2 00	14·2	14·4	13·8	12·5	10·9	9·2	7·3	82·3
3 00	13·0	13·8	13·8	13·2	12·0	10·4	8·5	84·7
4 00	10·9	12·2	12·9	13·0	12·4	11·5	9·7	82·6
5 00	8·5	10·1	11·2	11·9	12·3	12·0	10·8	76·8
6 00	6·0	7·5	8·9	10·1	11·1	11·7	11·3	66·6
7 00	4·3	5·5	6·8	8·0	9·5	10·8	11·2	56·1
8 00	3·5	4·1	4·9	6·1	7·6	9·3	10·5	46·0
9 00	3·9	3·9	4·1	4·8	6·0	7·8	9·3	39·8
10 00	5·3	4·7	4·2	4·3	5·1	6·5	8·1	38·2
11 00	7·5	6·5	5·3	4·9	5·1	5·9	7·1	42·3
Noon.	9·5	8·4	7·1	6·2	5·7	6·0	6·7	49·6
13 00	11·4	10·5	9·2	8·2	7·2	6·9	6·9	60·3
14 00	12·5	12·1	11·2	10·2	9·2	8·4	7·9	71·5
15 00	12·8	12·9	12·4	11·7	10·9	10·2	9·3	80·2
16 00	12·3	12·8	12·8	12·7	12·4	11·9	11·0	85·9
17 00	11·1	12·0	12·4	12·8	13·1	13·1	12·6	87·1
18 00	9·8	10·7	11·3	12·2	13·0	13·6	13·7	84·3
19 00	8·8	9·4	10·0	10·9	12·1	13·2	14·0	78·4
20 00	8·4	8·5	8·8	9·5	10·7	12·1	13·5	71·5
21 00	8·8	8·3	7·9	8·3	9·1	10·5	12·1	65·0
22 00	10·0	8·9	8·0	7·6	8·0	8·8	10·4	61·7
23 00	11·5	10·2	8·7	7·7	7·3	7·4	8·5	61·3
Sums.	232·4	234·6	230·3	228·2	228·7	232·5	233·9	1 620·6

Hourly tidal ordinates.

Station, Sitka, Alaska.
Observer, Fremont Morse.
Tabulator, A. F. Z.
Kind of time used, mean local civil.

Lat. 57° 4′ N.; long. 135° 20′ W.
Date, 1893.
Tide gauge No. 34; scale, $\frac{1}{8}$.
Readings are reduced to staff.

Day of month.	July 8	9	10	11	12	13	14	Horizontal sums.
Day of series.	8	9	10	11	12	13	14	
h. *m.*	*Feet.*	*Feet.*	*Feet.*	*Feet.*	*Feet.*	*Feet.*	*Feet.*	
0 00	7·0	8·3	10·0	12·5	14·4	16·0	16·2	84·4
1 00	6·1	6·4	7·6	10·0	12·3	14·8	16·1	73·3
2 00	5·8	5·3	5·6	7·3	9·6	12·3	14·6	60·5
3 00	6·5	5·0	4·2	5·0	6·6	9·3	12·1	48·7
4 00	7·5	5·5	3·9	3·5	4·1	6·1	8·9	39·5
5 00	8·9	6·8	4·5	3·0	2·5	3·6	5·7	35·0
6 00	10·2	8·4	6·0	3·8	2·2	2·0	3·2	35·8
7 00	11·0	9·9	7·9	5·5	3·3	2·0	1·9	41·5
8 00	11·2	10·9	9·7	7·6	5·2	3·2	2·1	49·9
9 00	10·7	11·5	11·1	9·7	7·8	5·6	3·8	60·2
10 00	9·9	11·3	11·8	11·5	10·2	8·4	6·4	69·5
11 00	8·9	10·6	11·8	12·4	12·0	11·0	9·3	76·0
Noon.	8·0	9·6	11·2	12·4	12·9	12·6	11·7	78·4
13 00	7·6	8·9	10·3	11·6	12·8	13·5	13·3	78·0
14 00	7·9	8·4	9·2	10·5	11·9	13·2	13·9	75·0
15 00	8·8	8·5	8·6	9·2	10·5	12·1	13·4	71·1
16 00	10·2	9·3	8·6	8·5	9·1	10·5	11·9	68·1
17 00	11·8	10·7	9·5	8.4	8·2	8·9	10·1	67·6
18 00	13·4	12·4	10·8	9·4	8·2	7·9	8·5	70·6
19 00	14·4	13·9	12·6	11·0	9·2	8·1	7·7	76·9
20 00	14·5	14·8	14·3	12·8	10·9	9·1	7·9	84·3
21 00	13·8	14·9	15·3	14·5	13·0	11·1	9·1	91·7
22 00	12·3	14·0	15·4	15·6	14·8	13·3	11·2	96·6
23 00	10·2	12·2	14·4	15·5	16·0	15·2	13·5	97·0
Sums.	236·6	237·5	234·3	231·2	227·7	229·8	232·5	1 629·6

Hourly tidal ordinates.

Station, Sitka, Alaska.
Observer, Fremont Morse.
Tabulator, A. F. Z.
Kind of time used, mean local civil.

Lat. 57° 4′ N., long. 135° 20′ W.
Date, 1893.
Tide gauge No. 34; scale, $\frac{1}{8}$.
Readings are reduced to staff.

Day of month.	July 15	16	17	18	19	20	21	Horizontal sums.
Day of series.	15	16	17	18	19	20	21	
h. *m.*	*Feet.*	*Feet.*	*Feet.*	*Feet.*	*Feet.*	*Feet.*	*Feet.*	
0 00	15·2	13·9	11·8	9·3	7·6	6·8	7·2	71·8
1 00	16·2	15·6	13·8	11·0	8·8	7·3	7·0	79·7
2 00	15·9	16·3	15·2	12·7	10·3	8·3	7·3	86·0
3 00	14·3	15·9	15·6	13·7	11·7	9·6	8·1	88·9
4 00	11·6	14·0	14·8	13·9	12·5	10·7	9·2	86·7
5 00	8·5	11·4	13·2	13·2	12·7	11·5	10·2	80·7
6 00	5·4	8·3	10·5	11·4	11·9	11·6	11·0	70·1
7 00	3·1	5·6	7·7	9·1	10·4	11·0	11·2	58·1
8 00	2·4	4·1	5·6	7·1	8·7	9·9	10·9	48·7
9 00	3·1	3·7	4·4	5·6	7·1	8·8	10·2	42·9
10 00	4·9	4·7	4·5	5·0	6·1	7·7	9·4	42·3
11 00	7·8	6·8	5·7	5·5	5·9	7·1	8·7	47·5
Noon.	10·5	9·4	7·9	6·8	6·5	7·1	8·3	56·5
13 00	12·8	12·0	10·2	8·8	7·8	7·8	8·5	67·9
14 00	14·3	13·9	12·6	11·0	9·7	9·1	9·1	79·7
15 00	14·5	14·9	14·1	12·8	11·5	10·6	10·2	88·6
16 00	13·7	14·9	14·7	14·0	13·0	12·2	11·4	93·9
17 00	12·0	13·6	14·1	14·2	13·7	13·2	12·7	93·5
18 00	10·2	11·8	12·7	13·4	13·6	13·6	13·5	88·8
19 00	8·6	9·9	10·7	11·8	12·6	13·4	13·8	80·8
20 00	7·9	8·4	9·0	10·1	11·1	12·4	13·4	72·3
21 00	8·2	7·9	7·7	8·4	9·4	10·9	12·4	64·9
22 00	9·6	8·5	7·3	7·3	8·1	9·4	10·9	61·1
23 00	11·8	10·0	7·9	7·1	7·1	8·0	9·4	61·3
Sums.	242·5	255·5	251·7	243·2	237·8	238·0	244·0	1 712.7

Hourly tidal ordinates.

Station, Sitka, Alaska.
Observer, Fremont Morse.
Tabulator, A. F. Z.
Kind of time used, mean local civil.

Lat. 57° 4′ N., long. 135° 20′ W.
Date, 1893.
Tide gauge No. 34; scale $\frac{1}{16}$.
Readings are reduced to staff.

Day of month.	July 22	23	24	25	26	27	28	Horizontal sums.
Day of series.	22	23	24	25	26	27	28	
h. m.	*Feet.*	*Feet.*	*Feet.*	*Feet.*	*Feet.*	*Feet.*	*Feet.*	
0 00	8·0	8·8	10·1	11·4	12·9	14·9	14·8	80·9
1 00	7·2	7·6	8·4	9·7	11·3	13·5	14·3	72·0
2 00	6·8	6·5	6·9	7·8	9·2	11·6	12·5	61·3
3 00	7·0	6·0	5·8	6·2	7·2	9·2	10·3	51·7
4 00	7·7	6·2	5·4	5·1	5·5	7·1	7·8	44·8
5 00	8·8	7·0	5·7	4·8	4·8	5·4	5·7	42·2
6 00	9·8	8·1	6·5	5·3	4·7	4·7	4·3	43·4
7 00	10·6	9·3	7·9	6·6	5·8	5·1	4·0	49·3
8 00	11·0	10·2	9·2	8·2	7·4	6·4	4·9	57·3
9 00	10·9	10·8	10·4	9·7	9·0	8·2	6·6	65·6
10 00	10·5	10·9	11·1	11·0	10·8	10·1	8·8	73·2
11 00	9·9	10·7	11·3	11·7	12·2	12·0	10·9	78·7
Noon.	9·3	10·2	10·9	11·7	12·6	13·0	12·5	80·2
13 00	9·0	9·7	10·4	11·4	12·5	13·2	13·2	79·4
14 00	9·1	9·3	9·8	10·6	11·8	12·6	13·0	76·2
15 00	9·6	9·3	9·3	9·8	10·9	11·6	12·1	72·6
16 00	10·5	9·7	9·3	9·3	10·1	10·3	10·7	69·9
17 00	11·5	10·5	9·7	9·3	9·6	9·4	9·4	69·4
18 00	12·6	11·6	10·6	10·0	9·9	9·1	8·6	72·4
19 00	13·3	12·6	11·7	11·1	10·8	9·5	8·6	77·6
20 00	13·3	13·2	12·8	12·4	12·2	10·7	9·4	84·0
21 00	12·9	13·3	13·4	13·4	13·7	12·3	10·9	89·9
22 00	11·9	12·8	13·4	14·0	14·9	13·8	12·7	93·5
23 00	10·4	11·6	12·7	13·8	15·3	14·9	14·2	92·9
Sums.	241·6	235·9	232·7	234·3	245·1	248·6	240·2	1 678·4

Hourly tidal ordinates.

Station, Sitka, Alaska.
Observer, Fremont Morse.
Tabulator, A. F. Z.
Kind of time used, mean local civil.

Lat. 57° 4′ N., long. 135° 20′ W.
Date, 1893.
Tide gauge No. 34; scale $\frac{1}{16}$.
Readings are reduced to staff.

Day of month.	July 29	Day of month.	July 29	Day of month.	July 29	Day of month.	July 29
Day of series.	29	Day of series.	29	Day of series.	29	Day of series.	29
h. m.	*Feet.*	*h. m.*	*Feet.*	*h. m.*	*Feet.*	*h. m.*	*Feet.*
0 00	15·0	7 00	3·8	14 00	13·4	20 00	8·6
1 00	14·9	8 00	4·0	15 00	12·8	21 00	9·8
2 00	13·8	9 00	5·4	16 00	11·5	22 00	11·7
3 00	11·8	10 00	7·5	17 00	10·0	23 00	13·4
4 00	9·1	11 00	9·8	18 00	8·8		
5 00	6·6	Noon.	11·9	19 00	8·2	Sums.	239·6
6 00	4·7	13 00	13·1				

Hourly sums.

Station, Sitka, Alaska. Lat. 57° 4′ N., long. 135° 20′ W.

Component, M.
Computer, D. S. B.
Kind of time used, mean local civil.

	Year.	Month.	Day.	Hour.
Observations begin	1893	July	1	0
Observations end	1893	July	29	23

Page.	0h	1h	2h	3h	4h	5h	6h	7h	8h	9h	10h	11h
1	89·3	91·4	88·0	78·9	73·6	50·8	39·9	34·5	42·0	43·6	55·8	69·1
2	62·9	75·6	83·9	98·9	82·7	75·2	66·4	67·8	57·2	62·2	71·8	84·9
3	80·1	105·9	99·0	98·1	90·8	79·2	75·8	48·1	44·5	46·0	60·6	62·6
4	102·6	82·5	84·1	82·1	86·5	63·4	51·2	48·7	39·8	41·2	40·0	48·2
5		15·0	14·9	13·8	11·8	9·1	6·6	4·7	3·8	4·0	5·4	7·5
Sums.	334·9	370·4	369·9	371·8	345·4	277·7	239·9	203·8	187·3	197·0	233·6	272·3
Divisors.	29	29	28	29	30	28	29	29	29	29	29	28
Means.	11·55	12·77	13·21	12·82	11·51	9·92	8·27	7·03	6·46	6·79	8·06	9·72
Residuals.	+1·66	+2·88	+3·32	+2·93	+1·62	+0·03	−1·62	−2·86	−3·43	−3·10	−1·83	−0·17

Page.	12h	13h	14h	15h	16h	17h	18h	19h	20h	21h	22h	23h
1	81·0	103·0	103·5	86·0	76·9	66·4	50·7	54·8	47·4	52·6	60·4	81·0
2	112·9	92·3	92·4	86·0	73·7	66·3	46·7	32·9	24·9	25·2	38·9	47·9
3	72·0	93·9	97·3	104·8	95·0	66·4	52·0	41·4	37·4	44·9	51·3	65·6
4	59·0	81·8	79·9	83·6	82·9	79·0	82·4	75·7	64·3	66·3	72·3	80·9
5	9·8	11·9	13·1	13·4	12·8	11·5	10·0	8·8	8·2	8·6	21·5	13·4
Sums.	334·7	382·9	386·2	373·8	341·3	289·6	241·8	213·6	182·2	197·6	244·4	288·8
Divisors.	29	30	29	29	29	29	29	30	28	29	30	29
Means.	11·54	12·76	13·32	12·89	11·77	9·99	8·34	7·12	6·51	6·81	8·15	9·96
Residuals.	+1·65	+2·87	+3·43	+3·00	+1·88	+0·10	−1·55	−2·77	−3·38	−3·08	−1·74	+0·07

Sum of means = 237·27
Mean = 9·88$\frac{1}{4}$

COMPONENT M.

Harmonic analysis of tides.

Station, Sitka, Alaska. Lat., 57° 4′ N.; long., 135° 20′ W.

Beginning of obs'ns, July 1, 1893, 0^h. Middle, July 15, 1893, 12^h.

1.		2.		3.	4.	5.	6.	7.	8.	9.	10.	11.	12.	13.	14.	15.	16.	17.	18.
				1−′2	2d ½3 reversed				3−4	5×8 12 c_1	6×8 12 c_3	7×8 12 c_5				3+4	12×15 12 s_1	13×15 12 s_3	14×15 12 s_5
h.		h.																	
0	+1·66	12	+1·65	+0·01	.....	1	1	1	+0·01	+0·010	+0·010	+0·010	0	0	0	+0·01	.....	.....	.....
1	+2·88	13	+2·87	+0·01	−0·24	·966	·707	·259	+0·25	+0·242	+0·177	+0·065	·259	·707	·966	−0·23	−0·060	−0·163	−0·222
2	+3·32	14	+3·43	−0·11	−0·09	·866	0	−·866	−0·02	−0·017	.....	+0·017	·5	1	·5	−0·20	−0·100	−0·200	−0·100
3	+2·93	15	+3·00	−0·07	−0·02	·707	−·707	−·707	−0·05	−0·035	+0·035	+0·035	·707	·707	−·707	−0·09	−0·064	−0·064	+0·064
4	+1·62	16	+1·88	−0·26	−0·05	·5	−1	·5	−0·21	−0·105	+0·210	−0·105	·866	0	−·866	−0·31	−0·268	.....	+0·268
5	+0·03	17	+0·10	−0·07	−0·09	·259	−·707	·966	+0·02	+0·005	−0·014	+0·019	·966	−·707	·259	−0·16	−0·155	+0·113	−0·041
6	−1·62	18	−1·55	−0·07	.....	0	0	0	−0·07	.....	.....	.....	1	−1	1	−0·07	−0·070	+0·070	−0·070
7	−2·86	19	−2·77	−0·09						+0·100	+0·418	+0·041					−0·717	−0·244	−0·101
8	−3·43	20	−3·38	−0·05						+0·0083	+0·0348	+0·0034					−0·0598	−0·0203	−0·0084
9	−3·10	21	−3·08	−0·02															
10	−1·83	22	−1·74	−0·09															
11	−0·17	23	+0·07	−0·24															

19.	20.	21.	22.	23.	24.	25.	26.	27.	28.	29.	30.	31.	32.	33.	34.	35.
	19×11 12 c_7		21×18 12 s_7	1+2	2d half of 23					23−24	25×29 12 c_2	26×29 12 s_2	27×29 12 c_6	28×29 12 s_6	23+24 24 δh	2d half of 34
+	+0·010	0	....	+3·31	−3·17	1	0	+	0	+ 6·48	+ 6·480	.....	+ 6·480	.....	+0·14	−0·25
−	−0·065	+	−0·222	+5·75	−5·63	·866	·5	0	+	+11·38	+ 9·855	+ 5·690	....	+11·380	+0·12	−0·07
+	+0·017	−	+0·100	+6·75	−6·81	·5	·866	−	0	+13·56	+ 6·780	+11·743	−13·560	.....	−0·06	+0·03
−	−0·035	+	+0·064	+5·93	−6·18	0	1	0	−	+12·11	.....	+12·110	.....	−12·110	−0·25	
+	−0·105	−	−0·268	+3·50	−3·57	−·5	·866	+	0	+ 7·07	− 3·535	+ 6·123	+ 7·070	.....	−0·07	
−	−0·019	+	−0·041	+0·13	−0·10	−·866	·5	0	+	+ 0·23	− 0·199	+ 0·115	.....	+ 0·230	+0·03	
0	.....	−	+0·070	−3·17												
	−0·197		−0·297	−5·63							+19·381	+35·781	− 0·010	− 0·500	.....	
	−0·0164		−0·0248	−6·81							+ 1·6151	+ 2·9818	− 0·0008	− 0·0417	.....	
				−6·18												
				−3·57												
				−0·10												

36.	37.	38.	39.	40.	41.	42.	43.	44.	45.
		34−35	36×38 12 c_4	37×38 12 s_4			34+35	41×43 12 c_8	42×43 12 s_8
1	0	+0·39	+0·390	.....	1	0	−0·11	−0·110	.....
·5	·866	+0·19	+0·095	+0·165	−·5	·866	+0·05	−0·025	+0·043
−·5	·866	−0·09	+0·045	−0·078	−·5	−·866	−0·03	+0·015	+0·026
			+0·530	+0·087				−0·120	+0·0698
			+0·0442	+0·0072				−0·0100	+0·005

	M_1	M_2		M_4		M_6	,	
Log. s	8·77670n	0·47448	.....	7·85733	.....	8·62014n	.....	.....
Log. c	7·91908	0·20820	.....	8·64345	.....	6·90309n	.....	.....
Log. tan ζ	0·85762	0·26628	.....	9·21388	.....	1·71705	.....	.....
ζ	277°·9	61°·6	.....	9°·3	.....	268°·9	.....	.....
V_0+u	291°·3	302°·3	.....	244°·6	.....	186°·9	.....	.....
κ'	209°·2	3°·9	.....	253°·9	.....	95°·8	.....	.....
κ	209°·2	3°·9	.....	253°·9	.....	95°·8	.....	.....
Log. [cos] sin ζ	9·99586	9·94414	.....	9·20815	.....	9·99992	.....	.....
	8·78084	0·53034	.....	8·64918	.....	8·62022	.....	.....
Log. aug. fac.	0·00124	0·00497	.....	0·02003	.....	0·04560	.....	.....
Log. R	8·78208	0·53531	.....	8·66921	.....	8·66582	.....	.....
R	0·06055	3·43012	.....	0·04669	.....	0·04633	.....	.....
Log. F	9·92037	0·01483	.....	0·02966	.....	0·04449	.....	.....
Log. H	8·70245	0·55014	.....	8·69887	.....	8·71031	.....	.....
H	0·05040	3·54928	.....	0.04999	.....	0·05132	.....	.....

$\tan \zeta = \frac{s}{c}$.

$\kappa = \zeta + V_0 + u$.

$R = \frac{s}{\sin \zeta} \times$ aug. fact. $= \frac{c}{\cos \zeta} \times$ aug. fact.

$H = R \times F$.

$\kappa = \kappa' + n(S-L)$
[when local V_0+u is used; observations in local time].

$\kappa = \kappa' + 15\,p(S-L)$
[when standard meridian (S) V_0+u is used; observations in standard time].

$\kappa = \kappa' + nS - 15\,pL$
[when Greenwich V_0+u is used; observations in standard or local time].

Local V_0+u at local midnight = Greenwich V_0+u + correction, Table 5, which is $L\,(n-15p)$.
Local V_0+u at midnight standard time = Greenwich V_0+u + correction, Table 5, $+n\,(S-L)$; or $L\,(n-15p)+n\,(S-L)$, $=n\,S-15pL$
For diurnals, $p=1$; for semidiurnals, $p=2$, etc.; for long-period tides, $p=0$.

62. *Formulæ for inferring amplitudes and epochs.*

Amplitudes.	Epochs.
$J_1 = \begin{cases} 0.079\ O_1 \\ 0.056\ K_1 \end{cases}$	$J_1^\circ = K_1^\circ + 0.496\ (K_1^\circ - O_1^\circ)$
$2Q = 0.026\ O_1$	$2Q^\circ = K_1^\circ - 1.992\ (K_1^\circ - O_1^\circ)$
$\rho_1 = 0.038\ O_1$	$\rho_1^\circ = K_1^\circ - 1.429\ (K_1^\circ - O_1^\circ)$
$OO = 0.043\ O_1$	$OO^\circ = 2K_1^\circ - O_1^\circ$
$P_1 = 0.331\ K_1$	$P_1^\circ = K_1^\circ$
$Q_1 = 0.194\ O_1$	$Q_1^\circ = K_1^\circ - 1.496\ (K_1^\circ - O_1^\circ)$
$K_2 = 0.272\ S_2$	$K_2^\circ = S_2^\circ$
$L_2 = \begin{cases} 0.145\ N_2 \\ 0.028\ M_2 \end{cases}$	$L_2^\circ = \begin{cases} 2M_2^\circ - N_2^\circ \\ S_2^\circ - 0.464\ (S_2^\circ - M_2^\circ) \end{cases}$
$2N = 0.133\ N_2$	$2N^\circ = 2N_2^\circ - M_2^\circ$
$R_2 = 0.008\ S_2$	$R_2^\circ = S_2^\circ$
$T_2 = 0.059\ S_2$	$T_2^\circ = S_2^\circ$
$\lambda_2 = 0.007\ M_2$	$\lambda_2^\circ = S_2^\circ - 0.536\ (S_2^\circ - M_2^\circ)$
$\mu_2 = 0.024\ M_2$	$\mu_2^\circ = 2M_2^\circ - S_2^\circ$
$\nu_2 = 0.194\ N_2$	$\nu_2^\circ = M_2^\circ - 0.866\ (M_2^\circ - N_2^\circ)$

63. *Clearance from the effects of other components.*

Computation of equilibrium arguments V_0+u.

Sitka, Alaska, July 1–29, 1893.

ELEMENTS.

Beginning of series, Tables 3 and 4. Middle of series, Tables 6, 7, 8, and 9.

h	s	p	p_1	N	I	P	ν	ξ	ν'	$2\nu''$	R	Q
99°·27	303°·09	69°·79	281°·11	24°·152	28°·225	67°·405	4°·540	4°·090	3°·238	6°·856	11°·97	50°·23

Component.	V_0+u. From Table 1 (Greenwich) $t=0$, midnight.	V_0+u. Numerical values.								Correction from Table 5.	Local V_0+u.	Log F. Tables 10, 11, 12, 13.
		°	°	°	°	°	°	°	°	°	°	
J_1	$h+s-p+90^\circ-\nu$	99·27	+303·09	− 69·79	+ 90·00	−4·54			58·03	+ 4·27	62·30	
$2Q$	$h-4s+2p-90^\circ+2\xi-\nu$	99·27	−132·36	+139·58	− 90·00	+8·18	− 4·54		20·13	−19·31	0·82	
ρ_1	$3h-3s-p-90^\circ+2\xi-\nu$	297·81	−189·27	− 69·79	− 90·00	+8·18	− 4·54		312·39	−13·76	298·63	
K_1	$h+90^\circ-\nu'$	99·27	+ 90·00	− 3·24					186·03	+ 0·37	186·40	9·95652
O_1	$h-2s-90^\circ+2\xi-\nu$	99·27	−246·18	− 90·00	+ 8·18	−4·54			126·73	− 9·52	117·21	9·93166
OO	$h+2s+90^\circ-2\xi-\nu$	99·27	+246·18	+ 90·00	− 8·18	−4·54			62·73	+10·26	72·99	
P_1	$-h-90^\circ$	− 99·27	− 90·00						170·33	− 0·37	169·96	0·00000
Q_1	$h-3s+p-90^\circ+2\xi-\nu$	99·27	−189·27	+ 69·79	− 90·00	+8·18	− 4·54		253·43	−14·42	239·01	9·93166
K_2	$2h-2\nu''$	198·54	− 6·86						191·68	+ 0·74	192·42	9·88937
L_2	$2h-s-p+180^\circ+2\xi-2\nu-R$	198·54	−303·09	− 69·79	+180·00	+8·18	− 9·08	−11·97	352·79	− 4·25	348·73	9·92319
M_1	$h-s+90^\circ+\xi-\nu+Q$	99·27	−303·09	+ 90·00	+ 4·09	−4·54	+50·23		295·87	− 4·57	291·30	9·92037
M_2	$2h-2s+2\xi-2\nu$	198·54	−246·18	+ 8·18	− 9·08				311·46	− 9·15	302·31	0·01483
M_4	$4h-4s+4\xi-4\nu$	37·08	−132·36	+ 16·36	− 18·16				262·92	−18·28	244·64	0·02966
M_6	$6h-6s+6\xi-6\nu$	235·62	− 18·54	+ 24·54	− 27·24				214·38	−27·50	186·88	0·04449
N_2	$2h-3s+p+2\xi-2\nu$	198·54	−189·27	+ 69·79	+ 8·18	−9·08			78·16	−14·04	64·12	0·01483
$2N$	$2h-4s+2p+2\xi-2\nu$	198·54	−132·36	+139·58	+ 8·18	−9·08			204·86	−18·94	185·92	
S_2	0	0							0·00	0·00	0·00	0·00000
T_2	$-h+p_1$	− 99·27	+281·11						181·84	− 0·37	181·47	
μ_2	$4h-4s+2\xi-2\nu$	37·08	−132·36	+ 8·18	− 9·08				263·82	−18·28	245·54	0·01483
ν_2	$4h-3s-p+2\xi-2\nu$	37·08	−189·27	− 69·79	+ 8·18	−9·08			137·12	−13·39	123·73	0·01483

When the series analyzed is practically a calendar year, the value of V_0+u can be taken, without computation, from Table 3, and adapted to the time meridian by Table 5; the F and f can be taken, without modification, from Table 10.

Component.	From auxiliary tables.			From analysis and inference.			R_c	R	ζ_c	ζ
	V_0+u	F	f	H	κ		From analysis	$f\times H$	From analysis	$\kappa-(V_0+u)$
				ft.					°	°
J_1	62·30	0·86569	1·15515	0·079 O_1	=0·0755	$K_1°+0·496\,(K_1°-O_1°)$	=137°·7		0·0872	75·4
2Q	00·82	0·85439	1·17043	0·026 O_1	=0·0249	$K_1°-1·992\,(K_1°-O_1°)$	= 83°·2		0·0291	82·4
ρ_1	298·63	0·85439	1·17043	0·038 O_1	=0·0363	$K_1°-1·430\,(K_1°-O_1°)$	= 95°·5		0·0425	156·9
K_1	186·40	0·90474	1·10528	1·8173×0·8230	=1·4956	136°·3−9°·5	=126°·8	2·0087	1·6531	309·9	300·4
O_1	117·21	0·85439	1·17043		0·9561		104°·9	1·1190	1·1190	347·7	347·7
OO	72·99	0·58221	1·71759	0·043 O_1	=0·0411	$2\,K_1°-O_1°$	=148°·7		0·0706		75·7
P_1	169·96	1·00000	1·00000	0·331 K_1	=0·4948	$P_1°=K_1°$	=126°·8	1·8772	0·4948	278·7	316·8
Q_1	239·01	0·85439	1·17043	0·194 O_1	=0·1855	$K_1°-1·495\,(K_1°-O_1°)$	= 94°·1	0·2113	0·2171	238·7	215·1
K_2	192·42	0·77512	1·29014	0·272 S_2	=0·2933	$K_2°=S_2°$	= 39°·0	1·2792	0·3784	85·4	206·6
L_2	348·73	0·83790	1·19346	0·145 N_2	=0·0897	$2\,M_2°-N_2°$	= 33°·3	0·1762	0·1071	56·5	44·6
M_2	302·31	1·03475	0·96641		3·5493		3°·9	3·4301	3·4301	61·6	61·6
N_2	64·12	1·03475	0·96641		0·6183		334°·5	0·5976	0·5976	270·4	270·4
2N	185·92	1·03475	0·96641	0·133 N_2	=0·0822	$2\,N_2°-M_2°$	=305°·1		0·0794		119·2
S_2	0·00	1·00000	1·00000	0·8046×1·3408	=1·0788	53°·6−14°·6	= 39°·0	0·8046	1·0788	53·6	39·0
T_2	181·47	1·00000	1·00000	0·059 S_2	=0·0636	$T_2°=S_2°$	= 39°·0		0·0636		217·5
μ_2	245·54	1·03475	0·96641	0·024 M_2	=0·0852	$2\,M_2°-S_2°$	=328°·8	0·1523	0·0823	133·6	83·3
ν_2	123·73	1·03475	0·96641	0·194 N_2	=0·1200	$M_2°-0·868\,(M_2°-N_2°)$	=338°·4	1·0559	0·1160	277·4	214·7

From Table 31, mean of four values, June 30–July 30.

Acceleration of K_1 due to P_1 $= -10°·45\times F(K_1) = -9°·455$
Resultant amplitude K and P $= [(1·2378-1·)\times F(K_1)]+1· = 1·2151$; recip. $= 0·8230$
Acceleration of S_2 due to K_2 $= -11°·825\times f(K_2) = -15·256$
" " S_2 due to T_2 $= +0°·675$
" " S_2 due to K_2 and T_2 $= -15°·256+0°·675 = -14°·581$
Resultant amplitude S_2 and K_2 $= [(0·8475-1·)\times f(K_2)]+1 = 0·8033$
" " S_2 and T_2 $= 0·9425$
" " S_2 and K_2 and T_2 $= 0·8033+0·9425-1 = 0·7458$; recip. $= 1·3408$

64. *Application of elimination tables.*

$$-\delta\overline{K}_1 = +0·050\ J_1'\cos[9°+\zeta_c(K_1)-\zeta(J_1)]+0·0565\ O_1'\cos[338°+\zeta_c(K_1)-\zeta(O_1)]$$
$$+0·056\ OO'\cos[22°+\zeta_c(K_1)-\zeta(OO)]+0·959\ P_1\cos[331°+\zeta_c(K_1)-\zeta(P_1)]$$
$$+0·052\ Q_1'\cos[328°+\zeta_c(K_1)-\zeta(Q_1)]+0·049\,(2Q')\cos[319°+\zeta_c(K_1)-\zeta(2Q)]$$
$$+0·011\ \rho_1'\cos[354°+\zeta_c(K_1)-\zeta(\rho_1)].$$

$$\delta\overline{\overline{K}}_1 = +0·050\ J_1'\sin[9°+\zeta_c(K_1)-\zeta(J_1)]+0·0565\ O_1'\sin[338°+\zeta_c(K_1)-\zeta(O_1)]$$
$$+0·056\,OO'\sin[22°+\zeta_c(K_1)-\zeta(OO)]+0·959\ P_1\sin[331°+\zeta_c(K_1)-\zeta(P_1)]$$
$$+0·052\ Q_1'\sin[328°+\zeta_c(K_1)-\zeta(Q_1)]+0·049\,(2Q')\sin[319°+\zeta_c(K_1)-\zeta(2Q)]$$
$$+0·011\ \rho_1'\sin[354°+\zeta_c(K_1)-\zeta(\rho_1)].$$

Here J_1' signifies the R of J_1, or $R(J_1)$, and not J_1 (or the H of J_1) nor $R_c(J_1)$, which means the R direct from analysis and so before the effects of the other scheduled components upon it have been eliminated. Similarly for O_1', P_1, Q_1', etc.

$$-\delta\overline{K}_1 = +0·050\times0·0872\cos(9°+310°-75°)+0·0565\times1·1190\cos(338°+310°-348°)$$
$$+0·056\times0·0706\cos(22°+310°-76°)+0·959\times0·4948\cos(331°+310°-317°)$$
$$+0·052\times0·2171\cos(328°+310°-215°)+0·049\times0·0291\cos(319°+310°-82°)$$
$$+0·011\times0·0425\cos(354°+310°-157°).$$

$$= +0·0043\cos244°+0·0632\cos300°+0·0040\cos256°+0·4745\cos324°+0·0114\cos63°+$$
$$0·0014\cos187°+0·0005\cos147°.$$

$$= -0·0043\times0·438+0·0632\times0·500-0·0040\times0·242+0·4745\times0·809+0·0114\times0·454-0·0014\times$$
$$0·993-0·0005\times0·839 = -0·0019+0·0316-0·0009+0·3839+0·0051-0·0014-0·0004 =$$
$$+0·4160.$$

$\delta\overline{\overline{K}}_1 = +0{\cdot}0043 \sin 244^\circ + 0{\cdot}0632 \sin 300^\circ + 0{\cdot}0040 \sin 256^\circ + 0{\cdot}4745 \sin 324^\circ + 0{\cdot}0114 \sin 63^\circ + 0{\cdot}0014 \sin 187^\circ + 0{\cdot}0005 \sin 147^\circ.$

$= -0{\cdot}0043 \times 0{\cdot}899 - 0{\cdot}0632 \times 0{\cdot}866 - 0{\cdot}0040 \times 0{\cdot}970 - 0{\cdot}4745 \times 0{\cdot}588 + 0{\cdot}0114 \times 0{\cdot}891 - 0{\cdot}0014 \times 0{\cdot}122 + 0{\cdot}0005 \times 0{\cdot}545 = -0{\cdot}0040 - 0{\cdot}0547 - 0{\cdot}0039 - 0{\cdot}2790 + 0{\cdot}0100 - 0{\cdot}0002 + 0{\cdot}0003 = -0{\cdot}3315.$

$$\text{Tan } \delta\zeta = \frac{-0{\cdot}3315}{2{\cdot}0087 - 0{\cdot}4160} = \frac{-0{\cdot}3315}{1{\cdot}5927} = -0{\cdot}2081;\ \delta\zeta = -11^\circ{\cdot}8;\ \cos \delta\zeta = 0{\cdot}9791.$$

$$R\,(K_1) = \frac{1{\cdot}5927}{0{\cdot}9791} = 1{\cdot}6267;\ K_1 = R \times F = 1{\cdot}6267 \times 0{\cdot}9047 = 1{\cdot}4717 \text{ feet.}$$

$$\zeta = 309^\circ{\cdot}9 - 11^\circ{\cdot}8 = 298^\circ{\cdot}1;\ \kappa = \zeta + V_0 + u = 298^\circ{\cdot}1 + 186^\circ{\cdot}4 = 124^\circ{\cdot}5.$$

Form for clearing the component A of the effects of other components B.

(1)	(2)	(3)	(4)	(5)	(6)	(7)	(8)	(9)	(10)	(11)	(12)	(13)
A	*B*	Coefficients			Angles						$-\delta\overline{A}$ or $-\delta c$,	$\delta\overline{\overline{A}}$ or δs
		Tab. 41	$R\,(B)$	(3) × (4)	Tab. 41	$\zeta(A)$	$\zeta_c(B)$	(6)+(7)−(8)	cos (9)	sin (9)	(5) × (10)	(5) × (11)
K_1												
	J_1	·050	·0872	·0044	9	310	75	244	− ·438	− ·899	− ·0019	− ·0040
	$2Q$	·049	·0291	·0014	319	310	82	187	− ·993	− ·122	− ·0014	− ·0002
	ρ_1	·011	·0425	·0005	354	310	157	147	− ·839	+ ·545	− ·0004	+ ·0003
	O_1	·056	1·1190	·0632	338	310	348	300	+ ·500	− ·866	+ ·0316	− ·0547
	OO	·056	·0706	·0040	22	310	76	256	− ·242	− ·970	− ·0009	− ·0039
	P_1	·959	·4948	·4745	331	310	317	324	+ ·809	− ·588	+ ·3839	− ·2790
	Q_1	·052	·2171	·0113	328	310	215	63	+ ·454	+ ·891	+ ·0051	+ ·0100
											+0·4160	−0·3315

$\tan \delta\zeta = \frac{(13)}{R_c(A) - (12)}$.

$\zeta = \zeta_c + \delta\zeta$.

$\kappa' = +V_0 + u$.

$R(A) = \frac{R_c(A) - (12)}{\cos \delta\zeta}$.

R is always positive.

$H(A) = R(A) \times F(A)$.

$R_c\,(K_1) = 2{\cdot}0087$ feet.

$\zeta_c\,(K_1) = 309^\circ{\cdot}9$.

$\tan \delta\zeta = -\frac{0{\cdot}3315}{2{\cdot}0087 - {\cdot}4160} = -\frac{0{\cdot}3315}{1{\cdot}5927} = -0{\cdot}2081.$

$\delta\zeta = -11^\circ{\cdot}8$, $\cos \delta\zeta = 0{\cdot}9791$.

$R\,(K_1) = \frac{1{\cdot}5927}{0{\cdot}9791} = 1{\cdot}6267$ feet.

$K_1 = 1{\cdot}6267 \times 0{\cdot}9047 = 1{\cdot}4717$ feet.

$\zeta = 309^\circ{\cdot}9 - 11^\circ{\cdot}8 = 298^\circ{\cdot}1$.

$K_1{}^\circ = 298^\circ{\cdot}1 + 186^\circ{\cdot}4 = 124^\circ{\cdot}5$.

65. *Results from harmonic analyses of hourly ordinates.*

SITKA, ALASKA.

From 29 days—July 1–29, 1893. From 1 year, 1893.

Component.	All ordinates used.				No doublings up or omissions on successive component hours.							
	Direct from analysis.		Corrected for other components.		Direct from analysis.		Corrected for other components.		Direct from analysis.		Corrected for other components.	
	H	κ	H	κ	H	κ	H	κ	H	κ	H	κ
K_1	1·8173	136·3	1·472	125	1·8236	136·5	1·475	125	1·507	125	1·504	125
K_2	0·9915	227·8	0·281	340	0·9800	277·7	0·273	342	0·315	21	0·320	22
L_{2a}	0·1476	45·2	0·121	26	0·1468	45·4	0·116	29	0·155	37	0·109	28
M_1	0·0504	209·2			0·0469	204·4			0·029	150		
M_2	3·5493	3·9	3·589	3·9	3·5589	3·9	3·597	3·9	3·583	2·5	3·591	2·8
M_4	0·0500	253·9			0·0132	117·7			0·013	140		
M_6	0·0513	95·8			0·0194	144·0			0·002	94		
N_2	0·6183	334·5	0·747	336	0·6220	336·7	0·746	338	0·687	340	0·758	335
O_1	0·9561	104·9	0·937	109	0·9522	105·2	0·939	110	0·905	109	0·905	110
P_1	1·8772	88·7	0·345	109	1·8751	88·6	0·337	113	0·465	124	0·450	124
Q_1	0·1806	117·7	0·150	97	0·1606	122·0	0·128	98	0·136	107	0·157	98
S_2	0·8046	53·6	1·272	38	0·8046	53·6	1·177	39	1·137	34	1·145	34
μ_2	0·1573	19·1	0·097	349	0·1586	22·4	0·077	349	0·073	334	0·085	321
ν_2	1·0924	41·1	0·179	31	1·0945	41·5	0·188	27	0·040	79	0·142	343

The results of the above computation show that for so short a series as 29 days, K_2, P_1 and ν_2 should be inferred from the final values of S_2, K_1, and N_2. In fact, it would be unreasonable to suppose that the elimination formulæ should give good results in these cases.

Comparison between results obtained by using all hourly heights and those obtained by so using the hourly heights that the successive component hours are represented once and only once—in other words, paying attention to the arrows in Table 42. There can be no reasonable doubt but that greater accuracy is generally attained by following the second of these two modes of procedure. Usually the difference of the results will be small, especially in the case of the predominating component. However, at most places one or more of the other components are a considerable fraction of M_2 and so M_4 and M_6 may be sensibly affected by the putting of two heights now and then upon the same component hour.

The following is a good example of this, since at Port Townsend K_1 is even larger than M_2. The differences between the two sets of results for the month at Sitka are not great, but they show that some accuracy is gained by paying attention to the arrows in Table 42.

Port Townsend, Wash.

From 29 days' hourly ordinates July 1–29, 1874, using all tabulated heights:	From 29 days' hourly ordinates July 1-29, 1874, omitting certain hourly heights, in accordance with Table 42:	From 3 years' hourly ordinates 1874–6:
$M_4 = 0{\cdot}198$	$M_4 = 0{\cdot}128$	$M_4 = 0{\cdot}131$
$M_4° = 275$	$M_4° = 297$	$M_4° = 296$
$M_6 = 0{\cdot}105$	$M_6 = 0{\cdot}048$	$M_6 = 0{\cdot}03$
$M_6° = 193$	$M_6° = 206$	$M_6° = 242$

66. *On the abbreviation of summations.*

Any two components A and B having very nearly equal speeds separate but a small amount n a week's time, which is the time covered by each page of tabulated hourly heights. (See § 61.)

Suppose a page of such heights to be summed with the A stencil. These sums may be regarded as a series of 24 component (A) hourly heights falling on and among the 24 hours of the middle, or fourth, day of the week. Had the B stencil been used instead, the B sums might likewise have been regarded as a series of 24 component (B) hourly heights falling on and among the 24 hours of the fourth day. In fact such times would have been the times of occurrence of the B hours of that day, reckoned from the beginning of the series. A comparisou of the (solar) times of the several A sums with the (solar) times of the occurrence of the B hours will show what B hour each A sum lies nearest to. Therefore if the 24 A sums be copied into a form one argument of which is the week or page and the other the hours from 0 to 23, it is very easy to construct a *secondary stencil** which shall sort the A sums according to the B hours.

Since it is assumed that one page is given to each week of hourly heights, the number of pages to be summed in a year's series is 52 or 53. The partial or seven-day sums for a year can be conveniently written upon about 7 pages; and this is the number of pages which have to be summed with the secondary stencil.

If complete stencils be used for the first row of components, secondary stencils may be applied to the resulting partial sums, and abbreviated summations obtained for the components written underneath:

J	L	M	N	O	OO	Q	2 Q	S	MN	MK
2 SM	λ, MS		ν	2 N, μ		ρ		K, P, R, T	2 MK	

This abbreviation of the work has its principal advantages in the case of a long series of observations; for, the irregularities introduced thereby gradually disappear, and, of course, the amount of labor saved in summation is about proportional to the time covered by the series.

In analyzing the B sums obtained by aid of the secondary stencils, the A augmenting factor should be applied because the first summation was according to A time while the observations are in solar time. Another augmenting factor is required because the secondary stencils are constructed with reference to B time. The reason for this can be readily seen if to the S sums we apply a secondary K stencil for obtaining the component K. Clearly the S sums do not fit the K hours; they may diverge as much as half of a K hour when all the S sums are used, and used

* First suggested by F. M. Little, of this Survey.

once, or half of an S hour when each K hour has one, and only one, partial S sum assigned to it. In either case the K augmenting factor can be used, because the speed of K is very nearly but not exactly 15° per hour.

Another way of lessening the labor of summation is to use either bi-hourly ordinates or the hourly heights combined in pairs. Such combination can be made, once for all, upon the hourly-ordinate sheets.

On the harmonic analysis of tides of long period.

67. The principal tides of long period are: The lunar fortnightly, Mf, period ½ tropical month; the luni-solar fortnightly, MSf, period ½ synodic month; the lunar monthly, Mm, period 1 anomalistic month; the annual, Sa, and the semiannual, Ssa.

In the treatment of these components it is convenient to make use of the daily sums (or means) of the hourly heights, distributing them in accordance with the annual and the several monthly periods. That is to say, the various months and the year are each supposed to be divided into 24 equal parts analogous to the subdivision of the day, so that the entire time covered by the observations can be divided up with reference to such periods and their twenty-fourth parts and the position of each daily sum with respect to them be determined. These sums, however taken, will belong to a certain hour of the day. We shall suppose, as usual, that the hourly heights belonging to 0^h, 1^h, 2^h . . . 23^h, are simply added together, thus making the sum pertain to $11^h\ 30^m$ a. m. of each day. Table 43 shows where each daily sum falls for the four kinds of distribution here contemplated.

Suppose the length of series used to be four years, or 1,461 days. It contains 106·95 periods of Mf; 98·95 periods of MSf; 53·02 periods of Mm; 4 periods of Sa, and 8 periods of Ssa. All of these numbers are integers, or very nearly integers. It would seem, therefore, that the daily heights, when once purified of the short-period tides, might be summed and analyzed according to the methods employed with the hourly heights for tides of short period. Moreover, for a series four years in length it seems probable that no elimination on account of the disturbing effects of these components upon one another will be necessary.

It is here proposed to use the uncorrected daily sums or means. The component S_2 is completely eliminated from each daily sum: K_1 and K_2 are very nearly eliminated, because the K day is very nearly equal to the S day. N_2 and O_1 have considerable effects upon the daily sums; but since their synodic periods with S_2 and S_1 are not commensurable with any of the long-period components sought, the latter cannot, in the long run, be greatly disturbed by the long-period waves which are due to N_2 and O_1. M_2 has a direct effect upon MSf, which it is necessary to determine.

Let L denote the wave, whose speed is equal to the speed of MSf, due to the imperfect elimination of M_2 from the daily sums or means. Then by (440) its amplitude is the numerical value of

$$\frac{M_2}{24\overline{m_2}} \mid 2 \sin 12\, m_2 \mid = 0{\cdot}08237 M_2 \times 2 \sin (347^\circ\ 48\tfrac{1}{2}') = 0{\cdot}03479 M_2. \tag{448}$$

or using (442),

$$L = 0{\cdot}03516 M_2.$$

By (441),

$$\zeta\,(L) = \zeta\,(M_2) \mp 180^\circ. \tag{449}$$

Since L has the same speed as has MSf, the latter may be cleared of the former by means of equations (432) and (433), or

$$-\delta\,\overline{MSf} = L' \cos\,[\zeta_c\,(MSf) - \zeta\,(L)], \tag{450}$$

$$\delta\,\overline{MSf} = L' \sin\,[\zeta_c\,(MSf) - \zeta\,(L)], \tag{451}$$

and equations (427), (428), and (429) after replacing A by MSf.

Since the hourly heights used each day are for 0^h, 1^h, 2^h . . . 23^h, the daily sum pertains to $11^h\ 30^m$; but the ζ of MSf, obtained in accordance with Table 43, refers to 0^h.

The factor f for the computed L is the same as that for M_2 because the amplitudes of the two waves bear a fixed ratio to each other; and so $L' = 0{\cdot}03620\ M_2'$.

The augmenting factor for MSf, as obtained from the analysis and uncorrected for L, is

$$\frac{\text{arc } (s_2 - m_2)\ \tau}{\text{chord } (s_2 - m_2)\ \tau} \tag{452}$$

where $s_2 - m_2 = 1^\circ{\cdot}016$, and $\tau = 24$ hours; this becomes

$$\frac{\text{arc } 24^\circ\ 23'}{\text{chord } 24^\circ\ 23'} = 1{\cdot}00758, \tag{453}$$

the logarithm of which is

$$0{\cdot}00328.$$

For a method of determining the annual, the semiannual, and other tides of very long period, see § 28, Part III.

68. The following treatment of long-period tides is taken bodily from Darwin's 1883 report. It supposes the time to be reckoned from noon instead of midnight, and the series to extend over a period of one year. Darwin has prepared and published special forms* for the reduction of these tides. Reference may also be made to Baird's Manual, pages 41, 52–54.

For the purpose of determining these tides we have to eliminate the oscillations of water-level arising from the tides of short period. As the quickest of these tides has a period of many days, the height of mean water at one instant for each day gives sufficient data. Thus there will in a year's observations be 365 heights to be submitted to harmonic analysis. In leap-years the last day's observation must be dropped, because the treatment is adapted for analysing 365 values.

To find the daily mean for any day it has hitherto been usual to take the arithmetic mean of 24 consecutive hourly values, beginning with the height at noon. This height will then apply to the middle instant of the period from 0^h to 23^h: that is to say, to $11^h\ 30^m$ at night. We shall propose some new modes of treating the observations, and in the first of them it will probably be more convenient that the mean for the day should apply to midnight instead of to $11^h\ 30^m$. For finding a mean applicable to midnight we take the 25 consecutive heights for 0^h to 24^h, and add the half of the first value to the 23 intermediate and to the half of the last and divide by 24. It would probably be sufficiently accurate if we took $\frac{1}{24}$ of the sum of the 25 consecutive values, if it is found that the division of every 24th hourly value into two halves materially increases the labour of computing the daily means. The three plans for finding the daily mean are then

$$\left.\begin{array}{ll} \frac{1}{24}\ (h_0 + h_1 + \ \ldots\ + h_{23}) & \text{(i)} \\ \frac{1}{24}\ (\frac{1}{2}\ h_0 + h_1 + \ \ldots\ + h_{23} + \frac{1}{2}\ h_{24}) & \text{(ii)} \\ \frac{1}{24}\ (h_0 + h_1 + \ \ldots\ + h_{23} + h_{24}) & \text{(iii)} \end{array}\right\} \tag{454}$$

And they will be denoted as methods (i), (ii), (iii) respectively. It does not, however, seem very desirable to use the third method. Major Baird considers that the use of method (i) is most convenient for the computers.

The formation of a daily mean does not obliterate the tidal oscillations of short period, because none of the tides, excepting those of the principal solar series, have commensurable periods in mean solar time.

A correction, or 'clearance of the daily mean,' has therefore to be applied for all the important tides of short period, excepting for the solar tides.

Let $R \cos(nt - \zeta)$ be the expression for one of the tides of short period as evaluated by the harmonic analysis for the same year, and let α be the value of $nt - \zeta$ at any noon. Then the 25 consecutive hourly heights of water, beginning with that noon, are—

$$R\cos\alpha,\ R\cos(n+\alpha),\ R\cos(2n+\alpha)\ \ \ldots\ \ R\cos(23n+\alpha),\ R\cos(24n+\alpha). \tag{455}$$

In the method (i) of taking the daily mean it is obvious that the 'clearance' is

$$\left.\begin{array}{l} -\frac{1}{24}\ R\dfrac{\sin 12n}{\sin \frac{1}{2}n}\cos(\alpha + 11\frac{1}{2}n) \\ \text{In the method (ii) it is easily proved to be} \\ -\frac{1}{24}\ R\dfrac{\sin 12n}{\tan \frac{1}{2}n}\cos(\alpha + 12n) \\ \text{and in method (iii) it is} \\ -\frac{1}{25}\ R\dfrac{\sin \frac{25}{2}n}{\sin \frac{1}{2}n}\cos(\alpha + 12n) \end{array}\right\} \tag{456}$$

The clearance, as written here, is additive.

* For sale by the Cambridge Scientific Instrument Company, St. Tibbs Row, Cambridge.

It was found practically in the computation for these tides that only three tides of short period exercise an appreciable effect, so that clearances for them have to be applied. These tides are the M_2, N, O tides. It was usual to compute these three clearances for every day in the year, and to correct the daily values accordingly. But in following this plan a great deal of unnecessary labour has been incurred, and when a simpler plan is followed it may perhaps be worth while to include more of the short-period tides in the clearances.

Professor J. C. Adams suggests the use of the tide-predicting machine for the evaluation of the sum of the clearances, and if this plan is not found to inconveniently delay operations in India, it may perhaps be tried.

In explaining the process we will suppose that method (i) has been followed; if either of the other plans be adopted it will be easy to change the formulæ accordingly.

It is clear that $R \cos (\alpha + 11\frac{1}{2} n)$ is the height of the tide n at $11^h\ 30^m$; and the same is true for each such tide. Hence if we use the tide-predicter to run off a year of fictitious tides with the semi-range of each tide equal to $\frac{1}{24} \sin 12\, n / \sin \frac{1}{2} n$ of its true semi-range, and with all the solar series and the annual and semi-annual tides put at zero, the height given at each $11^h\ 30^m$ in the year is the sum for each day of all the clearances to be *subtracted*. The scale to which the ranges are set may of course be chosen so as to give the clearances to a high degree of accuracy.

In the other process of clearance, which will be explained below, a single correction for each short-period tide is applied to each of the final equations, instead of to each daily mean.

We next take the 365 daily means, and find their mean value. This gives the mean height of water for the year. If the daily means be uncleared, the result can not be sensibly vitiated.

We next subtract the mean height from each of the 365 values, and find 365 quantities δh giving the daily height of water above the mean height.

These quantities are to be the subject of the harmonic analysis; and the tides chosen for evaluation are those which have been denoted above as Mm, Mf, MSf, Sa, Ssa.

Let

$$\left.\begin{aligned} \delta h = {} & A \cos (\sigma - \varpi)\, t + B \sin (\sigma - \varpi)\, t \\ & + C \cos 2\, \sigma t + D \sin 2\, \sigma t \\ & + C' \cos 2\, (\sigma - \eta)\, t + D' \sin 2\, (\sigma - \eta)\, t \\ & + E \cos \eta t + F \sin \eta t \\ & + G \cos 2\, \eta t + H \sin 2\, \eta t \end{aligned}\right\} \tag{457}$$

where t is time measured from the first $11^h\ 30^m$.

Now suppose l_1, l_2 are the increments in 24 m. s. hours of any two of the five arguments $(\sigma - \varpi)t$, $2\, \sigma t$, $2\, (\sigma - \eta)t$, ηt, $2\eta t$, and that A_1, B_1; A_2, B_2, are the corresponding coefficients of the cosine and sine in the expression for δh.

Then if δh_i be the value of δh at the $(i+1)^{th}$ $11^h\ 30^m$ in the year, we may write

$$\delta h_i = A_1 \cos l_1 i + B_1 \sin l_1 i + A_2 \cos l_2 i + B_2 \sin l_2 i + \ . \ . \ . \ . \tag{458}$$

And therefore

$$\begin{aligned} \delta h_i \cos l_1 i = {} & \tfrac{1}{2} A_2 \left\{\cos (l_1 + l_2)\, i + \cos (l_1 - l_2)\, i\right\} \\ & + \tfrac{1}{2} B_2 \left\{\sin (l_1 + l_2)\, i - \sin (l_1 - l_2)\, i\right\} + \ . \ . \ . \end{aligned} \tag{459}$$

$$\begin{aligned} \delta h_i \sin l_1 i = {} & \tfrac{1}{2} A_2 \left\{\sin (l_1 + l_2)\, i + \sin (l_1 - l_2)\, i\right\} \\ & + \tfrac{1}{2} B_2 \left\{- \cos (l_1 + l_2)\, i + \cos (l_1 - l_2)\, i\right\} + \ . \ . \ . \ . \end{aligned} \tag{460}$$

Now let

$$\phi\, (x) = \tfrac{1}{2} \frac{\sin \frac{365}{2} x}{\sin \frac{1}{2} x}, \tag{461}$$

so that

$$\phi\, (l_1 \pm l_2) = \tfrac{1}{2} \frac{\sin \frac{365}{2} (l_1 \pm l_2)}{\sin \frac{1}{2} (l_1 \pm l_2)}. \tag{462}$$

We may observe that

$$\phi\, (x) = \phi\, (-x), \text{ and } \phi\, (0) = 182\tfrac{1}{2}.$$

If therefore Σ denotes summation for the 365 values from $i = 0$ to $i = 364$, we have

$$\left.\begin{aligned} \Sigma \delta h \cos l_1 i = {} & [\phi\, (l_1 + l_2) \cos 182\, (l_1 + l_2) + \phi\, (l_1 - l_2) \cos 182\, (l_1 - l_2)]\, A_2 \\ & + [\phi\, (l_1 + l_2) \sin 182\, (l_1 + l_2) - \phi\, (l_1 - l_2) \sin 182\, (l_1 - l_2)]\, B_2 + \ . \ . \ , \\ \Sigma \delta h \sin l_1 i = {} & [\phi\, (l_1 + l_2) \sin 182\, (l_1 + l_2) + \phi\, (l_1 - l_2) \sin 182\, (l_1 - l_2)]\, A_2 \\ & + [- \phi\, (l_1 + l_2) \cos 182\, (l_1 + l_2) + \phi\, (l_1 - l_2) \cos 182\, (l_1 - l_2)]\, B_2 + \ . \ . \ . \end{aligned}\right\} \tag{463}$$

In these equations there is always one pair of terms in which l_2 is identical with l_1, and since $\phi\, (l_1 - l_1) = 182\frac{1}{2}$, and $\cos 182\, (l_1 - l_1) = 1$, it follows that there is one term in each equation in which there is a coefficient nearly equal to 182·5. In the cosine series it will be a coefficient of an A; in the sine series, of a B.

The following are the equations (copied from the Report for 1872) with the coefficients inserted, as computed from these formulæ, or their equivalents:—

[P.]

Final Equations for Tides of Long Period.

	Coefft. of A.	Coefft. of B.	Coefft. of C.	Coefft. of D.	Coefft. of C′.	Coefft. of D′.	Coefft. of E.	Coefft. of F.	Coefft. of G.	Coefft. of H.
$\Sigma\,\delta\,h \times \cos(\sigma-\varpi)t$ =	+183·05	+ 2·14	+ 0·73	+ 4·29	+ 0·77	+ 5·04	+ 4·88	− 0·34	+ 4·96	− 0·69
$\times \sin(\sigma-\varpi)t$ =	+ 2·14	+181·95	− 4·15	+ 1·02	− 4·90	+ 1·07	+ 3·80	+ 0·34	+ 3·88	+ 0·69
$\times \cos 2\sigma t$ =	+ 0·73	− 4·15	+183·18	+ 0·88	+ 0·61	+ 0·92	− 1·50	− 0·10	− 1·51	− 0·19
$\times \sin 2\sigma t$ =	+ 4·29	+ 1·02	+ 0·88	+181·82	+ 0·92	− 0·75	+ 3·05	− 0·08	+ 3·06	− 0·17
$\times \cos 2(\sigma-\eta)t$ =	+ 0·77	− 4·90	+ 0·61	+ 0·92	+183·19	+ 0·97	− 1·68	− 0·11	− 1·70	− 0·23
$\times \sin 2(\sigma-\eta)t$ =	+ 5·04	+ 1·07	+ 0·92	− 0·75	+ 0·97	+181·81	+ 3·25	− 0·10	+ 3·27	− 0·23
$\times \cos \eta t$ =	+ 4·88	+ 3·80	− 1·50	+ 3·05	− 1·68	+ 3·25	+182·43	+ 0·00	− 0·14	+ 0·00
$\times \sin \eta t$ =	0·34	+ 0·34	− 0·10	− 0·08	− 0·11	− 0·10	+ 0·00	+182·57	+ 0·00	+ 0·00
$\times \cos 2\eta t$ =	+ 4·96	+ 3·88	− 1·51	+ 3·06	− 1·70	+ 3·27	− 0·14	+ 0·00	+182·43	+ 0·00
$\times \sin 2\eta t$ =	− 0·69	+ 0·69	− 0·19	− 0·17	− 0·23	− 0·23	+ 0·00	+ 0·00	+ 0·00	+182·57

If the daily means have been cleared by the use of the tide-predicter as above described, these ten equations are to be solved by successive approximation, and we are then furnished with the two component semiamplitudes, say A_l, B_l of the five long-period tides. But the initial instant of time is the first $11^h\,30^m$ in the year instead of the first noon. Hence if as before we put $R^2 = A_l^2 + B_l^2$, and $\tan\zeta_l = B_l/A_l$, we must, in order to reduce the results to the normal form in which noon of the first day is the initial instant of time, add to ζ_l the increment of the corresponding argument for $11^h\,30^m$, according to method (i), or for 12 hours according to methods (ii) or (iii).

69. If, however, the daily means have not been cleared, then before solution of the final equations corrections for clearance will have to be applied, which we shall now proceed to evaluate.

For this process we still suppose method (i) to be adopted.

Let n be the speed of a short-period tide in degrees per m. s. hour, and let $\psi(n) = \frac{1}{24}\frac{\sin 12\,n}{\sin \frac{1}{2}n}$. Then we have already seen that the clearance to δh_i, the mean height of water at $11^h\,30^m$ of the $(i+1)^{th}$ day, will be

$$-\psi(n)\,\mathrm{R}\cos\left[n\left\{24\,i + 11\tfrac{1}{2}\right\} - \zeta\right]. \tag{464}$$

If we write $m = 24\,n$ (so that m is the daily increase of argument of the tide of short period), and $\beta = n \times 11\frac{1}{2} - \zeta$, this becomes

$$-\psi(n)\,\mathrm{R}\cos(mi+\beta). \tag{465}$$

Hence the clearance for $\delta h_i \cos li$ is

$$-\tfrac{1}{2}\psi(n)\,\mathrm{R}\left\{\cos[(m+l)i+\beta] + \cos[(m-l)i+\beta]\right\}, \tag{466}$$

and for $\delta h_i \sin li$ is

$$-\tfrac{1}{2}\psi(n)\mathrm{R}\left\{\sin[(m+l)i+\beta] - \sin[(m-l)i+\beta]\right\}. \tag{467}$$

Summing the series of 365 terms we find that the additive clearance for $\Sigma\,\delta\,h\cos li$ is

$$-\mathrm{R}\,\psi(n)\left\{\phi(m+l)\cos[182(m+l)+\beta] + \phi(m-l)\cos[182(m-l)+\beta]\right\}, \tag{468}$$

where as before

$$\phi(x) = \tfrac{1}{2}\frac{\sin\frac{365}{2}x}{\sin\frac{1}{2}x}. \tag{469}$$

If Δn denotes the increase of the argument nt in $182^d\,11^h\,30^m$, this may now be written

$$-\mathrm{R}\,\psi(n)\left\{\phi(m+l)\cos[\Delta n + 182\,l - \zeta] + \phi(m-l)\cos[\Delta n - 182\,l - \zeta]\right\}. \tag{470}$$

If therefore $\mathrm{R}\cos\zeta = \mathrm{A}$, $\mathrm{R}\sin\zeta = \mathrm{B}$, so that A and B are the component semi-ranges of the tide n as immediately deduced from the harmonic analysis for the tides of short period, we have for the clearance to $\Sigma\delta h\cos li$

$$\begin{aligned} &-[\psi(n)\,\phi(m+l)\cos(\Delta n + 182\,l) + \psi(n)\,\phi(m-l)\cos(\Delta n - 182\,l)]\ \mathrm{A} \\ &-[\psi(n)\,\phi(m+l)\sin(\Delta n + 182\,l) + \psi(n)\,\phi(m-l)\sin(\Delta n - 182\,l)]\ \mathrm{B}. \end{aligned} \tag{471}$$

In precisely the same manner we find the clearance for $\Sigma\delta h\sin li$ to be

$$\begin{aligned} &-[\psi(n)\,\phi(m+l)\sin(\Delta n + 182\,l) - \psi(n)\,\phi(m-l)\sin(\Delta n - 182\,l)]\ \mathrm{A} \\ &+[\psi(n)\,\phi(m+l)\cos(\Delta n + 182\,l) - \psi(n)\,\phi(m-l)\cos(\Delta n - 182\,l)]\ \mathrm{B}. \end{aligned} \tag{472}$$

These coefficients may be written in a form more convenient for computation. For

$$\phi\,(m\pm l)=\frac{\sin\frac{359}{2}(m\pm l)}{2\sin\frac{1}{2}(m\pm l)}=\tfrac{1}{2}\cos 182\,(m\pm l)+\tfrac{1}{2}\sin 182\,(m\pm l)\cot\tfrac{1}{2}(m\pm l). \tag{473}$$

Then let

$$\left.\begin{aligned}\mathrm{K}\,(n,\,l)&=\phi\,(m+l)+\phi\,(m-l)\\ \mathrm{Z}\,(n,\,l)&=\phi\,(m+l)-\phi\,(m-l)\end{aligned}\right\} \tag{474}$$

Also let

$$\left.\begin{aligned}\psi\,(n)\cos\Delta n&=\tfrac{1}{24}\frac{\sin 12\,n}{\sin\frac{1}{2}n}\cos\Delta n=\mathrm{C}\,(n)\\ \psi\,(n)\sin\Delta n&\qquad\qquad\quad=\mathrm{S}\,(n)\end{aligned}\right\} \tag{475}$$

The functions K (n, l), Z (n, l), C (n), S (n) may be easily computed from (473), (474), (475).

Then if we denote the additive clearance for $\Sigma\delta h\cos li$ by

$$[\mathrm{A},\,n,\,l,\,\cos]\,\mathrm{A}+[\mathrm{B},\,n,\,l,\,\cos]\,\mathrm{B}, \tag{476}$$

and that for $\Sigma\delta h\sin li$ by

$$[\mathrm{A},\,n,\,l,\,\sin]\,\mathrm{A}+[\mathrm{B},\,n,\,l,\,\sin]\,\mathrm{B}. \tag{477}$$

We have

$$\left.\begin{aligned}[\mathrm{A},\,n,\,l,\,\cos]&=-\mathrm{C}\,(n)\,\mathrm{K}\,(n,\,l)\cos 182\,l+\mathrm{S}\,(n)\,\mathrm{Z}\,(n,\,l)\sin 182\,l\\ [\mathrm{B},\,n,\,l,\,\cos]&=-\mathrm{S}\,(n)\,\mathrm{K}\,(n,\,l)\cos 182\,l-\mathrm{C}\,(n)\,\mathrm{Z}\,(n,\,l)\sin 182\,l\\ [\mathrm{A},\,n,\,l,\,\sin]&=-\mathrm{S}\,(n)\,\mathrm{Z}\,(n,\,l)\cos 182\,l-\mathrm{C}\,(n)\,\mathrm{K}\,(n,\,l)\sin 182\,l\\ [\mathrm{B},\,n,\,l,\,\sin]&=\quad\mathrm{C}\,(n)\,\mathrm{Z}\,(n,\,l)\cos 182\,l-\mathrm{S}\,(n)\,\mathrm{K}\,(n,\,l)\sin 182\,l\end{aligned}\right\} \tag{478}$$

We must remark that if $\frac{1}{2}(m+l)=360°$, $\phi\,(m+l)$ is equal to 182·5.

This case arises when l is the tide MSf of speed $2(\sigma-\eta)$, and m the tide M_2 of speed $2(\gamma-\sigma)$, for $m+l$ is then $24\times 2(\gamma-\eta)=720°$.

The clearance of the long-period tide l from the effects of the short-period tide n requires the computation of these four coefficients. For the clearance of the five long-period tides from the effects of the three tides M_2, N, O, it will be necessary to compute 60 coefficients.

If it shall be found convenient to make the initial instant or epoch for the tides of long period different from that chosen in the reductions of those of short period, it will, of course, be necessary to compute the values which A and B would have had if the two epochs had been identical. A and B are, of course, the component semi-ranges of the tide of short period at the epoch chosen for the tides of long period; to determine them it is necessary to multiply R by the cosine and sine of $V+u-\kappa$ at the epoch.

[Q.]

Schedule of Coefficients for Clearance of Daily Means in the Final Equations.

$l=$	$\sigma-\varpi$	2σ	$2(\sigma-\eta)$	η	2η
			(M_2) $n=2(\gamma-\sigma)$.		
[A, n, l, cos]	−0·05557	+0·00302	+5·7393	−0·10410	−0·01465
[B, n, l, cos]	−0·17036	−0·03773	−2·9228	−0·07525	−0·07546
[A, n, l, sin]	−0·17075	+0·04170	−2·8400	−0·00176	−0·00353
[B, n, l, sin]	+0·04410	+0·01052	−5·7271	+0·00476	+0·00958
			(N) $n=2\gamma-3\sigma+\varpi$.		
[A, n, l, cos]	−0·05884	+0·03680	+0·02938	−0·01760	−0·01760
[B, n, l, cos]	−0·07758	−0·22337	−0·19384	+0·00254	+0·00254
[A, n, l, sin]	−0·02059	−0·15245	−0·12210	+0·00020	+0·00041
[B, n, l, sin]	+0·11381	−0·08544	−0·08081	+0·00007	+0·00015
			(O) $n=\gamma-2\sigma$.		
[A, n, l, cos]	−0·06485	+0·01673	+0·01582	−0·19240	−0·19340
[B, n, l, cos]	−0·34765	−0·07788	−0·08158	−0·18260	−0·18311
[A, n, l, sin]	−0·34523	+0·08418	+0·08748	−0·00460	−0·00926
[B, n, l, sin]	+0·04052	+0·03379	+0·03295	+0·00897	+0·01802

It may happen from time to time that the tide-gauge breaks down for a few days, from the stoppage of the clock, the choking of the tube, or some other such accident. In this case there will be a hiatus in the values of δh. Now, the whole process employed depends on the existence of 365 continuous values of δh. Unless, therefore, the year's observations are to be sacrificed, this hiatus must be filled. If not more than three or four days' observations are wanting, it will be best to plot out the values of δh graphically on each side of the hiatus, and filling in the gap with a curve drawn by hand, use the values of δh given by the conjectural curve. If the gap is somewhat longer, several plans may be suggested, and judgment must be used as to which of them is to be adopted.

If there is another station of observation in the neighborhood, the values of δh for that station may be inserted.

The values of δh for another part of the year, in which the moon's and sun's declinations are as nearly as may be the same as they were during the gap, may be used.

It may be, however, that the hiatus is of considerable length, so that the preceding methods are inapplicable: as when in 1882 the tidal record for Vizagapatam is wanting for 67 days The following method of treatment will then be applicable:—

We find approximate values of the tidal constituents of long period, and fill in the hiatus, so as to complete the 365 values, with the computed height of the tide during the hiatus.

To find these approximate values we form $\Sigma\delta h \cos lt$ and $\Sigma\delta h \sin lt$ for the days of observation; next, in the ten final equations of Schedule P we neglect all the terms with small coefficients, and in the terms whose coefficients are approximately 182·5, we substitute a coefficient equal to 182·5 diminished by half the number of days of hiatus. For example, for Vizagapatam in 1882 we have $182{\cdot}5 - \frac{1}{2} \times 67 = 149$, and, e. g., $\Sigma\delta h \cos(\sigma - \varpi)\, t = 149A$ approximately. After the approximate values of A, B, C, D, &c., have been found, it is easy to find the approximate height of tide for the days of the hiatus. This plan will also apply where the hiatus is of short duration.

It may be pursued whether or not we are working with cleared daily means; for if the daily means are uncleared, as will henceforth be the case, we import with the numbers by which the hiatus is filled exactly those fictitious tides of long period which are cleared away by the use of the "clearance coefficients," in preparing the ten final equations for solution.

Other methods of treating a stoppage of the record may be devised. If the stoppage be near the beginning of the year, or near the end, we may neglect the observations before or after the gap, and compute afresh the 100 coefficients of Schedule P, and the clearance coefficients of Schedule Q for the number of days remaining. If the gap is in the middle we might compute the values of the coefficients of Schedules P and Q as though the days of hiatus were days of observation, bearing in mind that the formulæ are to be altered by the consideration that time is to be measured from the initial $11^h\ 30^m$ of the year, instead of from the initial $11^h\ 30^m$ of the days of hiatus.

The so computed coefficients are then to be subtracted from the values given in Schedules P and Q, and the amended final equations and amended clearance coefficients to be used.

It must remain a matter of judgment as to which of these various methods is to be adopted in each case.

70. *Method of Equivalent Multipliers for the Harmonic Analysis for the Tides of Long Period.*

Up to the present time the harmonic analysis for these tides has been conducted on a plan which seems to involve a great deal of unnecessary labour. If l be the speed of any one of the five tides for which the analysis has been carried out, in degrees per m. s. day, the values of $\cos lt$ and $\sin lt$ have been computed for $t = 0, 1, 2 \ldots 364$, so that there are 730 values for each of the five tides. These 730 values have then been multiplied by the 365 δh's corresponding to each value of t, and the summations gave $\Sigma\delta h \cos lt$ and $\Sigma\delta h \sin lt$, the numerical results being the left-hand sides of one pair of the ten final equations explained in § 68. Now, it appears that this labour may be largely abridged, without any substantial loss of accuracy.

The plan proposed by Professor Adams is that of equivalent multipliers. The values of $\cos lt$ may be divided into eleven groups, according as they fall nearest to 1·0, ·9, ·8, ·7 . . . . ·2, ·1, 0. Then, as all the values of δh are to be multiplied by some value of $\cos lt$, and that value of $\cos lt$ must fall into one of these groups, we collect together all the values of δh which belong to one of these groups, sum them, and multiply the sum by the corresponding multiplier, 1·0, ·9, ·8, &c., as the case may be. Since there are as many values of $\cos lt$ which are negative as positive, we must change the sign of half of the δh's. This changing of sign may be effected mechanically as follows:—In the spaces for entry of the δh's, those δh's whose sign is to be unchanged are to be entered on the left side of the space if positive, and to the right if negative; when the sign is to be altered this order of entry is to be reversed. Thus in the column corresponding to each multiplier we shall have two sub-columns, on the left all the δh's which, when the signs are appropriately altered, are +, and on the right those which are —. The sub-columns are to be separately summed, and their difference gives the total of the column, which is to be multiplied by the multiplier appropriate to the column. The treatment for the formation of $\Sigma\delta h \sin lt$ is precisely similar.

The annexed form [Schedule R] is designed for entry for determination of $\Sigma\delta h \cos(\sigma - \eta)\, t$.

The entries of δh are to be made continuously in the marked squares from left to right, and back again from right to left. The numbers in the squares, which in the computation forms are to be printed small and put in the corner, indicate the days of observation. The rows are arranged in sets of four corresponding to each complete period of $2(\sigma - \eta)$. In the middle pair for each period the + values of δh are to be written on the right, and in the rest on the left. The word 'change' opposite half the rows is to show the computer that he is to change the mode of entry. Each column, excepting that for zero, is to be summed at the foot of the page, and multiplied by the multiplier corresponding to its column. A pair of forms is required for each tide of long period; they are very easily prepared from the existing forms, in which the values of the multipliers are already computed.

[R]

Form for Reduction of the Tide MSf.

		+ − 1·0	+ − ·9	+ − ·8	+ − ·7	+ − ·6	+ − ·5	+ − ·4	+ − ·3	+ − ·2	+ − ·1	No entries.	
1	→	0	1		2				3				
	←	7		6			5				4		change.
	→	8		9				10				11	change.
	←	14			13			12					
2	→	15	16			17				18			
	←		21			20				19			change.
	→	22	23		24			25					change.
	←	29		28			27					26	
3	→	30		31			32				33		
	←		36		35				34				change.
	→	37	38			39			40				change.
	←	44	43			42				41			
4	→	45		46				47					
	←	51		50				49				48	change.
	→	52	53			54				55			change.
	←		58			57			56				
5	→	59	60		61				62				
	←	66		65			64				63		change.
	→	67		68			69				70		change.
	←	74	73		72			71					
Total + / Total −			&c.				&c.				&c.	No entries.	
Total Multiply Results		×1·0	×·9	×·8	×·7	×·6	×·5	×·4	×·3	×·2	×·1	×·0	

Sum laterally . . . . . Sum of + = ... Sum of − = ...

$\Sigma \delta h \cos 2(\sigma - \eta)\, l =$ . . .

71. *To reproduce the quantities harmonically analyzed.*

Having analyzed a set of partial or hour sums and determined the c's and s's, or R's and ζ's, it is sometimes desirable to recombine the partial tides of the analysis sheet into a resultant curve in order to see how this curve compares with the curve obtained by plotting the hour sums; or it may be done for other purposes. The nature of the case will suggest how many of the harmonics should be retained.

The same process is applicable to inequality curves, certain constants having been found from the analysis of the heights or intervals involving the particular inequality in question. (See § 54, Part I.) The accompanying form will show how this combination may be made.

Form for reproducing observed quantities from the results of an analysis.

$$y = y_0 + c_1 \cos x + s_1 \sin x + c_2 \cos 2x + s_2 \sin 2x + c_3 \cos 3x + s_3 \sin 3x + \ . \ . \ . \ .$$

A	$x = 0$		$x = 1^h = 15°$		$x = 2^h = 30°$		$x = 3^h = 45°$		$x = 4^h = 60°$		$x = 5^h = 75°$		$x = 6^h = 90°$		$x = 7^h = 105°$	
	(0)	$A \times (0)$	(1)	$A \times (1)$	(2)	$A \times (2)$	(3)	$A \times (3)$	(4)	$A \times (4)$	(5)	$A \times (5)$	(6)	$A \times (6)$	(7)	$A \times (7)$
$c_1 =$	1		·966		·866		·707		·5		·259		0		− ·259	
$s_1 =$	0		·259		·5		·707		·866		·966		1		·966	
$c_2 =$	1		·866		·5		0		− ·5		− ·866		−1		− ·866	
$s_2 =$	0		·5		·866		1		·866		·5		0		− ·5	
$c_3 =$	1		·707		0		− ·707		−1		− ·707		0		·707	
$s_3 =$	0		·707		1		·707		0		− ·707		−1		− ·707	
$c_4 =$	1		·5		− ·5		−1		− ·5		·5		1		·5	
$s_4 =$	0		·866		·866		0		− ·866		− ·866		0		·866	
$c_6 =$	1		0		−1		0		1		0		−1		0	
$s_6 =$	0		1		0		−1		0		1		0		−1	
$c_8 =$	1		− ·5		− ·5		1		− ·5		− ·5		1		− ·5	
$s_8 =$	0		·866		− ·866		0		·866		− ·866		0		·866	
Sum																
$y = y_0 +$ sum																

A	$x = 8^h = 120°$		$x = 9^h = 135°$		$x = 10^h = 150°$		$x = 11^h = 165°$		$x = 12^h = 180°$		$x = 13^h = 195°$		$x = 14^h = 210°$		$x = 15^h = 225°$	
	(8)	$A \times (8)$	(9)	$A \times (9)$	(10)	$A \times (10)$	(11)	$A \times (11)$	(12)	$A \times (12)$	(13)	$A \times (13)$	(14)	$A \times (14)$	(15)	$A \times (15)$
$c_1 =$	− ·5		− ·707		− ·866		− ·966		−1		− ·966		− ·866		− ·707	
$s_1 =$	·866		·707		·5		·259		0		− ·259		− ·5		− ·707	
$c_2 =$	− ·5		0		·5		·866		1		·866		·5		0	
$s_2 =$	− ·866		−1		− ·866		− ·5		0		·5		·866		1	
$c_3 =$	1		·707		0		− ·707		−1		− ·707		0		·707	
$s_3 =$	0		·707		1		·707		0		− ·707		−1		− ·707	
$c_4 =$	− ·5		−1		− ·5		·5		1		·5		− ·5		−1	
$s_4 =$	·866		0		− ·866		− ·866		0		·866		·866		0	
$c_6 =$	1		0		−1		0		1		0		−1		0	
$s_6 =$	0		1		0		−1		0		1		0		−1	
$c_8 =$	− ·5		1		−5		− ·5		1		− ·5		− ·5		1	
$s_8 =$	− ·866		0		·866		− ·866		0		·866		− ·866		0	
Sum																
$y = y_0 +$ sum																

A	$x = 16^h = 240°$		$x = 17^h = 255°$		$x = 18^h = 270°$		$x = 19^h = 285°$		$x = 20^h = 300°$		$x = 21^h = 315°$		$x = 22^h = 330°$		$x = 23^h = 345°$	
	(16)	$A \times (16)$	(17)	$A \times (17)$	(18)	$A \times (18)$	(19)	$A \times (19)$	(20)	$A \times (20)$	(21)	$A \times (21)$	(22)	$A \times (22)$	(23)	$A \times (23)$
$c_1 =$	− ·5		− ·259		0		·259		·5		·707		·866		·966	
$s_1 =$	− ·866		− ·966		−1		− ·966		− ·866		− ·707		− ·5		− ·259	
$c_2 =$	− ·5		− ·866		−1		− ·866		− ·5		0		·5		·866	
$s_2 =$	·866		·5		0		− ·5		− ·866		−1		− ·866		− ·5	
$c_3 =$	1		·707		0		− ·707		−1		− ·707		0		·707	
$s_3 =$	0		·707		1		·707		0		− ·707		−1		− ·707	
$c_4 =$	− ·5		·5		1		·5		− ·5		−1		− ·5		·5	
$s_4 =$	− ·866		− ·866		0		·866		·866		0		− ·866		− ·866	
$c_6 =$	1		0		−1		0		1		0		−1		0	
$s_6 =$	0		1		0		−1		0		1		0		−1	
$c_8 =$	− ·5		− ·5		1		− ·5		− ·5		1		− ·5		− ·5	
$s_8 =$	·866		− ·866		0		·866		− ·866		0		·866		− ·866	
Sum																
$y = y_0 +$ sum																

$$y = y_0 + R_1 \cos(x - \zeta_1) + R_2 \cos(2x - \zeta_2) + R_3 \cos(3x - \zeta_3) + \ . \ . \ .$$

$$R = \sqrt{c^2 + s^2}, \ \tan \zeta = s/c, \ c = R \cos \zeta, \ s = R \sin \zeta.$$

72. *To combine the various tidal components for any given future time.*

This may be illustrated by an example: To find the height of the tide at San Francisco (Fort Point), Cal., at 1 o'clock p. m. (standard time) March 1, 1910, the principal tidal components being

$$\begin{aligned} M_2 &= 1{\cdot}69 \text{ ft.}, \quad M_2{}^\circ = 332, \quad S_2 = 0{\cdot}39 \text{ ft.}, \quad S_2{}^\circ = 336^\circ, \\ N_2 &= 0{\cdot}37 \text{ ft.}, \quad N_2{}^\circ = 305^\circ, \quad K_1 = 1{\cdot}22 \text{ ft.}, \quad K_1{}^\circ = 107^\circ, \\ O_1 &= 0{\cdot}78 \text{ ft.}, \quad O_1{}^\circ = 0{\cdot}87^\circ, \quad P_1 = 0{\cdot}37 \text{ ft.}, \quad P_1{}^\circ = 105^\circ. \end{aligned}$$

We are to find the value of

$$\begin{aligned} y = {} & M_2{}' \cos (m_2 t + \arg_0 M_2 - M_2{}^\circ) + S_2 \cos (s_2 t + \arg_0 S_2 - S_2{}^\circ) \\ & + N_2{}' \cos (n_2 t + \arg_0 N_2 - N_2{}^\circ) + K_1{}' \cos (k_1 t + \arg_0 K_1 - K_1{}^\circ) \\ & + O_1{}' \cos (o_1 t + \arg_0 O_1 - O_1{}^\circ) + P_1 \cos (p_1 t + \arg_0 P_1 - P_1{}^\circ) \end{aligned} \tag{479}$$

where the accent denotes that the factor f, Table 10, has been applied to the amplitude. Now Table 3 gives $V_0 + u_0$ or arg, for Greenwich midnight, while the above equation supposes it to belong to meridian of San Francisco and the time to be local. According to section 62, Part III, we may use the Greenwich values directly, provided we modify the epochs so as to take into account the longitude of the place and of the time meridian. The epochs modified once for all are

$$344^\circ, 340^\circ, 322^\circ, 108^\circ, 99^\circ, 106^\circ$$

respectively.

By Tables 3 and 4, we have for March 1, 1910,

$$\begin{aligned} \arg_0 M_2 &= 243^\circ + 1^\circ = 244^\circ, & \arg_0 K_1 &= 3^\circ + 58^\circ = 61^\circ, \\ \arg_0 S_2 &= 0 + 0 = 0, & \arg_0 O_1 &= 243 + .303 = 186, \\ \arg_0 N_2 &= 107 + 311 = 58, & \arg_0 P_1 &= 350 + 302 = 292. \end{aligned}$$

By Table 1, we have for 13 hours (midnight to 1 p. m.)

$$\begin{aligned} & m_2 t = 17^\circ, s_2 t = 30^\circ, n_2 t = 10^\circ, k_1 t = 196^\circ, o_1 t = 181^\circ, p_1 t = 194^\circ; \\ \therefore\ & y = M_2{}' \cos 277^\circ + S_2 \cos 50^\circ + N_2{}' \cos 106^\circ \\ & \quad + K_1{}' \cos 149^\circ + O_1{}' \cos 268^\circ + P_1 \cos 210^\circ. \end{aligned}$$

By Table 10, the values of f are

$$0{\cdot}98, 1{\cdot}00, 0{\cdot}98, 1{\cdot}07, 1{\cdot}12, 1{\cdot}00$$

respectively.

$$\begin{aligned} \therefore\ & M_2{}' = 1{\cdot}67, S_2 = 0{\cdot}38, N_2{}' = 0{\cdot}35, K_1{}' = 1{\cdot}31, O_1{}' = 0{\cdot}86, P_1 = 0{\cdot}37 \text{ feet.} \\ & y = +0{\cdot}20 + 0{\cdot}24 - 0{\cdot}10 - 1{\cdot}10 - 0{\cdot}03 + 0.35 = -0{\cdot}44 \text{ feet} \end{aligned}$$

as the height of the sea, reckoned from mean sea level, at the given time.

At 2, 3, 4, 5, and 6 o'clock, p.m., the heights are in like manner found to be $-0{\cdot}64$, $-1{\cdot}33$, $-2{\cdot}32$, $-2{\cdot}55$, $-1{\cdot}14$ feet.

73. *Harmonic analysis of a series two weeks in extent.*

In the Manual of Scientific Enquiry* Darwin shows how to analyze a short series of hourly readings extending over a fortnight or a month. Summations are made for M, S, and O. The M and O sums are analyzed in the usual way, giving the amplitudes and epochs of M_2 and O_1. The S sums give an affected S_2 and K_1; the summation extends over slightly different periods in the two cases.

The lengths of series used are as follows:

	d.	h.	d.	h.
For M	14	12 or	29	00,
" S (diurnal)	14	00 "	28	00,
" S (semidiurnal)	15	00 "	30	00,
" O	14	00 "	26	21.

* Or B. A. A. S. Report, 1896.

If, for the moment, we put

$$\tan \psi = \frac{f(K_2)\, K_2 \sin (\arg^* K_2 - \arg S_2)}{S_2 \text{ (with } T_2) + f(K_2)\, K_2 \cos (\arg K_2 - \arg S_2)}, \tag{480}$$

in which the arguments are to be taken at the middle of the series, we obtain the amount that the S_2 corresponding to a given solar parallax is accelerated by K_2 (see § 2, Part III). From Table 1

$$\frac{S_2}{K_2} = 3{\cdot}67, \quad \arg K_2 - \arg S_2 = 2\,(h - \nu''). \tag{481}$$

The formula for ψ may now be written

$$\tan \psi = \frac{f(K_2) \sin 2\,(h - \nu'')}{3{\cdot}67\, p_\prime + f(K_2) \cos 2\,(h - \nu'')} \tag{482}$$

where

$$p_\prime = \left(\frac{\text{sun's parallax}}{\text{sun's mean parallax}}\right)^3 \doteq \frac{S_2 \text{ (with } T_2)}{S_2} \tag{483}$$

$= $ tabular value last column, Table 31.

$$\therefore S_2{}^\circ = \zeta(S_2) + \psi. \tag{484}$$

The fifth column of Table 31 gives the correction of $S_2{}^\circ$ due to the direct effect of T_2; Darwin has disregarded this correction. The amplitude of S_2 is the observed amplitude R (S_2) multiplied by

$$\frac{3{\cdot}67 \cos \psi}{3{\cdot}67\, p_\prime + f(K_2) \cos 2\,(h - \nu'')} \tag{485}$$

The epoch and amplitude of K_2 are obtained from the equations

$$K_2{}^\circ = S_2{}^\circ, \tag{486}$$

$$K_2 = \frac{1}{3{\cdot}67}\, S_2. \tag{487}$$

In like manner we may put

$$\tan \phi = \frac{P_1 \sin (\arg P_1 - \arg K_1)}{f(K_1)\, K_1 + P_1 \cos (\arg P_1 - \arg K_1)} \tag{488}$$

where ϕ is the amount by which K_1 is accelerated because of P_1. From Table 1

$$\frac{K_1}{P_1} = 3, \quad \arg P_1 - \arg K_1 = -2h + \nu' \pm 180^\circ: \tag{489}$$

$$\therefore \tan \phi = \frac{\sin (2h - \nu')}{3 f(K_1) - \cos (2h - \nu')}. \tag{490}$$

$$K_1{}^\circ = \zeta(K_1) + \arg_0 K_1 + \phi, \tag{491}$$

$$K_1 = \frac{3 \cos \phi}{3 f(K_1) - \cos (2h - \nu')} \times R(K_1). \tag{492}$$

For P_1 we have

$$P_1{}^\circ = K_1{}^\circ, \tag{493}$$

$$P_1 = \tfrac{1}{3}\, K_1. \tag{494}$$

74. *Harmonic analysis of high and low waters.*†

The components K_1 and O_1 can be quite accurately obtained by the following process:

Copy the heights of the high and low waters into the form for "hourly ordinates," always putting these values upon the nearest solar hour. Apply the K and O stencils in the usual manner, but also keeping track of the number of high waters and the number of low waters that enter into each partial hourly sum. Then bring the partial hourly sums together, and note the difference between the number of low and high waters. Correct the hourly sums by this difference multiplied by one-half of the mean range of tide for the period of the observations. Analyze the

* I. e., the equilibrium argument, Table 1.

† See Chapter III, Part III.

twenty-four hourly means or residuals in the usual manner. K_1 thus obtained should be corrected for P_1 by Table 31. O_1 does not require correction. The example given below shows the degree of accuracy attained at Sitka from a 29-day series of high and low waters. The corresponding results for Sandy Hook, N. J., are also given.

Station, Sitka, Alaska. Lat. 57° 4′ N.; long. 135° 20′ W.

Component, K. Observations begin 1893, July 1 0.

Computer, D. S. B. Observations end 1893, July 29 23.

Kind of time used, mean local civil.

	Page.	0h	1h	2h	3h	4h	5h	6h	7h	8h	9h	10h	11h
Stencil sums No. highs and lows	1	0·0	21·2 1 H, 1 L	28·4 2 H	13·2 1 H	12·5 1 H	12·0 1 H	11·4 1 H	0·0	3·4 1 L	7·9 2 L	9·3 2 L	5·9 1 L
	2	16·1 1 H	16·3 1 H	5·8 1 L	0·0	5·0 1 L	3·9 1 L	2·9 1 L	4·0 2 L	13·0 1 H, 1 L	0·0	11·5 1 H	11·9 1 H
	3	7·0 1 L	6·8 1 L	23·1 1 H, 1 L	16·3 1 H	15·7 1 H	14·0 1 H	12·7 1 H	11·6 1 H	11·2 1 H	2·4 1 L	3·6 1 L	9·3 2 L
	4	27·6 2 H	15·3 1 H	15·1 1 H	6·8 1 L	6·0 1 L	0·0	5·3 1 L	9·4 2 L	4·7 1 L	15·0 1 H, 1 L	0·0	11·0 1 H
	5	0·0	0·0	15·1 1 H	0·0	0·0	0·0	0·0	0·0	0·0	3·8 1 L	0·0	0·0
	Sums	50·7	59·6	87·5	36·3	39·2	29·9	32·3	25·0	32·3	29·1	24·4	38·1

	Page.	12h	13h	14h	15h	16h	17h	18h	19h	20h	21h	22h	23h
Stencil sums No. highs and lows	1	6·7 1 L	0·0	0·0	25·8 2 H	12·8 1 H	26·1 2 H	13·6 1 H	14·0 1 H	8·4 1 L	16·1 2 L	7·6 1 L	7·2 1 L
	2	0·0	33·0 2 H, 1 L	13·5 1 H	22·2 1 H, 1 L	8·6 1 L	0·0	16·4 2 L	7·8 1 L	7·6 1 L	14·6 1 H	15·0 1 H	31·2 2 H
	3	13·0 2 L	8·3 1 L	0·0	0·0	29·7 2 H	14·7 1 H	28·0 2 H	13·7 1 H	13·8 1 H	7·8 1 L	7·9 1 L	7·3 1 L
	4	0·0	11·3 1 H	33·5 2 H, 1 L	26·4 2 H	9·2 1 L	9·3 1 L	0·0	18·8 2 L	17·6 2 L	13·4 1 H	13·4 1 H	0·0
	5	0·0	0·0	0·0	0·0	13·5 1 H	0·0	0·0	0·0	0·0	8.2 1 L	0·0	0·0
	Sums	19·7	52·6	47·0	74·4	73·8	50·1	58·0	54·3	47·4	60·1	43·9	45·7

	Page.	0h	1h	2h	3h	4h	5h	6h	7h	8h	9h	10h	11h
No. of highs		3	3	5	2	2	2	2	1	2	1	1	2
No. of lows		1	2	2	1	2	1	2	4	3	5	3	3
Sums		50·7	59·6	87·5	36·3	39·2	29·9	32·3	25·0	32·3	29·1	24·4	38·1
½ Mn × diff.		− 7·3	− 3·6	−11·0	− 3·6	0·0	− 3·6	0·0	+11·0	+ 3·6	+14·6	+ 7·3	+3·6
		43·4	56·0	76·5	32·7	39·2	26·3	32·3	36·0	35·9	43·7	31·7	41·7
Divisors		4	5	7	3	4	3	4	5	5	6	4	5
Means		10·85	11·20	10·93	10·90	9·80	8·77	8·08	7·20	7·18	7·29	7·92	8·34
Residuals		+ 1·00	+ 1·35	+ 1·08	+ 1·05	− 0·05	− 1·08	− 1·77	− 2·65	− 2·67	− 2·56	− 1·93	−1.51

	Page.	12h	13h	14h	15h	16h	17h	18h	19h	20h	21h	22h	23h
No. of highs		0	3	3	5	4	3	3	2	1	2	2	2
No. of lows		3	2	1	1	2	1	2	3	4	4	2	2
Sums		19·7	52·6	47·0	74·4	73·8	52·1	58·0	54·3	47·4	60·1	43·9	45·7
½ Mn × diff.		+11·0	− 3·6	− 7·3	−14·6	− 7·3	− 7·3	− 3·6	+ 3·6	+11·0	+ 7·3	0·0	0·0
		30·7	49·0	39·7	59·8	66·5	42·8	54·4	50·7	58·4	67·4	43·9	45·7
Divisors		3	5	4	6	6	4	5	5	5	6	4	4
Means		10·23	9·80	9·92	9·97	11·08	10·70	10·88	10·14	11·68	11·23	10·98	11·42
Residuals		+ 0·38	− 0·05	+ 0·07	+ 0·12	+ 1·23	+ 0·85	+ 1·03	+ 0·29	+ 1·83	+ 1·38	+ 1·13	+1·57

The divisor for each hour = No. of highs + No. of lows.

The sum of the hourly means is 2364·9 and the mean $9·85\frac{2}{24}$.

The correction ½ Mn × diff. is one-half the mean range from the "first reduction" multiplied by the difference between the number of highs and lows entering into each hourly sum; subtracted when the highs are in excess, and added when the lows are in excess. Mn for this month is 7·31 feet.

SITKA, ALASKA.

From 29 days' high and low waters, analyzed as above, July 1–29, 1893

K_1	1·602
$K_1°$	127·3
O_1	0·917
$O_1°$	95·7

From harmonic analysis of hourly ordinates 1 year, 1893–94

K_1	1·508
$K_1°$	125
O_1	0·906
$O_1°$	123

SANDY HOOK, N. J.

From 29 days' high and low waters, analyzed as above, July 1–29, 1893		From harmonic analysis of hourly ordinates 2 years, 1887, 1888	
K_1	0·336	K_1	0·334
$K_1°$	97·4	$K_1°$	101
O_1	0·150	O_1	0·173
$O_1°$	99·6	$O_1°$	98

If, however, before beginning the summation we subtract $\frac{1}{2}$ Mn from all high-water heights and add $\frac{1}{2}$ Mn to all low-water heights, the necessity for keeping count of the number of highs and lows will be avoided and the same result obtained as before.

If the high and low water heights be tabulated upon hourly ordinate forms, and summations made with the K and O stencils even for a very long period, there is no guaranty that the effect of M_2 will be totally eliminated, although it will be nearly so. To understand this, suppose that at the given station the tropic diurnal inequality be great in low-water heights but small in the high-water heights; also, suppose that observations be confined to high waters. Now if these heights be tabulated in their proper places upon the hourly ordinate sheets and the K stencil applied to them, it is clear that an amplitude much too small will be obtained for K_1. In other words, M_2 will have a pronounced effect upon the result. If, now, lows as well as highs be included in the observations, the effect of M_2 upon a diurnal tide will be very much diminished; but there is no reason to suppose that it will ever disappear completely, however long the series.

While it is possible to distribute high and low water heights or times according to known arguments and obtain consistent results for a given station, serious difficulties arise when an attempt is made to interpret the results in terms of the harmonic constants or to accurately obtain these constants by any prescribed distributions.

For instance, the phase inequality in the range of tide is not a simple harmonic increase and decrease of the range even if μ_2 be ignored. Its unsymmetrical character can readily be seen by referring to Table 16. The parallax and declinational inequalities are even more complicated than that of phase, as is pointed out in §§ 46, 47 of Part III.

Having called attention to some of the difficulties encountered in the harmonic analysis of high and low water observations, we pass to a more thorough and systematic procedure. For convenience, the whole work of making the analysis may be divided into six steps or operations:

(1) Making a "first reduction."

(2) Finding the mean amplitudes and the time occurrence of the mean ranges using four consecutive tides.

(3) Obtaining hourly ordinates from these amplitudes by aid of a system of sine curves drawn upon a transparent sheet.

(4) Summing these ordinates with semidiurnal stencils and analyzing the partial sums.

(5) Diminishing the heights of the tides by the ordinates belonging to the times of the tides, and tabulating the heights thus altered upon hourly ordinate forms.

(6) Summing these values with diurnal stencils, and analyzing the partial sums.

(1′) The process of making a "first reduction" is fully described in § 51, Part I, and § 27, Part III. The epoch of M_2 is found from the lunitidal intervals by aid of this last-named paragraph; the amplitude, from the observed mean range of tide by aid of Tables 23 and 14. Where there is much difference between the duration of rise and of fall, the amplitude of M_2 as determined from the range must be affected with M_4. To correct for this, divide the M_2 as obtained above by the quantity

$$\cos v + \sin 2v \times \tfrac{1}{8} \text{ (duration fall} \sim 6^{h}\cdot21) \qquad (495)$$

where

$$v = \text{(duration fall} \sim 6^{h}\cdot21) \times 14^{\circ}\cdot492.$$

(2′) In the accompanying tabulation the last column shows the values of the successive mean amplitudes; the fifth, the times of occurrence of the ranges; and the sixth, their duration which is 6·21 hours on an average. The values inclosed in parentheses involve observations prior to July 1; generally they would have been simply inferred from succeeding values.

SITKA, ALASKA.

Date.	Time of tide.	Sum of consecutive four.	Mean.	6 hours, etc., applied.	Difference.	Height of tide.	Range.	Sum of alternate ranges.	Amplitude.
1893.	*h.*	*h.*	*h.*	*h.* (22·7)	*h.*	*Feet.*	*Feet.*	*Feet.*	*Feet.* (3·8)
July 1.	1·1			(4·8)	6·1	14·6	11·2		(3·9)
	8·2	44·0	11·0	11·0	6·2	3·4	9·4	15·6	3·9
	14·8	44·9	11·2	17·2	6·2	12·8	4·4	15·4	3·8
	19·9	45·4	11·4	23·4	6·2	8·4	6·0	14·9	3·7
2.	2·0	46·0	11·5	5·5	6·1	14·4	10·5	15·1	3·8
	8·7	46·9	11·7	11·8	6·3	3·9	9·1	15·2	3·8
	15·4	47·4	11·8	17·8	6·0	13·0	4·7	14·8	3·7
	20·8	48·1	12·0	0·0	6·2	8·3	5·7	14·7	3·7
3.	2·5	48·7	12·2	6·2	6·2	14·0	10·0	14·5	3·6
	9·4	49·1	12·3	12·3	6·1	4·0	8·8	15·0	3·8
	16·0	49·8	12·4	18·4	6·1	12·8	5·0	14·2	3·6
	21·2	50·3	12·6	0·6	6·2	7·8	5·4	13·9	3·5
4.	3·2	50·9	12·7	6·7	6·1	13·2	8·9	14·0	3·5
	9·9	51·9	13·0	13·0	6·3	4·3	8·6	14·2	3·6
	16·6	52·8	13·2	19·2	6·2	12·9	5·3	13·5	3·4
	22·2	53·3	13·3	1·3	6·1	7·6	4·9	12·8	3·2
5.	4·1	54·1	13·5	7·6	6·3	12·5	7·5	13·1	3·3
	10·4	55·3	13·8	13·8	6·2	5·0	8·2	13·5	3·4
	17·4	56·4	14·1	20·1	6·3	13·2	6·0	13·0	3·2
	23·4	57·2	14·3	2·3	6·2	7·2	4·8	12·1	3·0
6.	5·2	57·8	14·4	8·4	6·1	12·0	6·1	12·5	3·1
	11·2	34·9	8·7	14·7	6·3	5·9	7·7	13·1	3·3
	18·0	36·1	9·0	21·0	6·3	13·6	7·0	12·5	3·1
7.	0·5				6·6	6·6			

(3′). To prepare for interpolating hourly ordinates from the successive ranges, first select a cross-section paper whose smallest divisions are about $\frac{1}{10}$ inch square. Let an hour of time cover an inch or more, and let a foot of tide, when convenient, correspond to an inch on the sheet. Along the upper margin of the sheet number the hours from 0 to 24, or 0, and thence on to 12, making 36 hours represented. On a sheet of tracing cloth lay out a rectangle, say 10 inches high and long enough to represent 6 lunar, or 6·21 solar, hours. The center of this rectangle is the node of a system of, say, 10 sine curves whose amplitudes vary from 0 to 5 inches, and are numbered, if convenient, from 0 to 5. All curves extend over a half period or 6·21 hours. To interpolate hourly heights, place the node of the sine curves at the time of occurrence of a semidiurnal range given in the fifth column of the above tabulation. Select the curve having a number equivalent to the mean amplitude at the time given in the last column. Read the heights at the points where this curve crosses the hour lines. These are the required hourly heights reckoned from mean water level. So proceed with each range. If the tide have a very large phase inequality, causing the quarter tidal day to depart much from a quarter lunar day, or 6·21 hours, this fact may be taken

into consideration by reading one or two of the hourly heights on either side of the node as before, and the hourly heights near the times of maxima and minima, when the edges of the rectangle have been made to fall exactly half way between the times given in the fifth column; or more than one permanent set of curves may be used. Probably this refinement is unnecessary.

SITKA, ALASKA, 1893.

Interpolated ordinates of semidiurnal wave.

Day of month.	July 1	2	3	4	5	6	7
Day of series.	1	2	3	4	5	6	7
h. m.	*Feet.*	*Feet.*	*Feet.*	*Feet.*	*Feet.*	*Feet.*	*Feet.*
0 00	8·3	7·1	6·0	5·0	4·1	3·3	2·8
1 00	9·5	8·7	7·7	6·7	5·5	4·2	3·2
2 00	9·9	9·5	9·1	8·3	7·1	5·6	3·9
3 00	9·1	9·7	9·6	9·3	8·4	7·1	5·2
4 00	7·6	8·6	9·2	9·4	9·1	8·3	6·5
5 00	5·7	7·0	8·1	8·6	9·2	9·0	7·9
6 00	3·8	5·1	6·4	7·2	8·3	8·9	8·7
7 00	2·5	3·4	4·6	5·5	7·0	8·0	8·7
8 00	2·1	2·3	3·2	3·9	5·3	6·6	8·0
9 00	2·7	2·2	2·5	2·8	3·9	5·0	6·7
10 00	4·1	3·0	2·5	2·5	3·0	3·8	5·3
11 00	6·0	4·5	3·7	3·0	2·6	3·0	4·0
Noon.	7·9	6·4	5·5	4·2	3·3	2·8	3·3
13 00	9·3	8·2	7·4	6·0	4·6	3·5	3·0
14 00	9·9	9·4	9·0	7·8	6·3	4·9	3·6
15 00	9·4	9·7	9·8	9·0	7·9	6·5	4·8
16 00	8·1	8·9	9·4	9·5	9·0	7·9	6·3
17 00	6·3	7·4	8·3	9·1	9·2	8·9	7·7
18 00	4·5	5·6	6·7	7·9	8·8	9·2	8·7
19 00	3·0	3·9	4·9	6·3	7·7	8·7	9·2
20 00	2·2	2·7	3·4	4·7	6·2	7·5	8·7
21 00	2·6	2·4	2·5	3·3	4·6	6·0	7·8
22 00	3·6	3·0	2·6	2·7	3·5	4·5	6·3
23 00	5·3	4·2	3·5	3·1	2·8	3·3	4·8

(4′) Before summing with the semidiurnal stencils, the hourly heights should have a constant added to them in order to avoid negative quantities; in the accompanying tabulation 6 feet has been added. The summation and analysis are then to be carried out as in the case of true hourly ordinates.

(5′) The values of the semidiurnal ordinates referred to mean water level are now known for each hour; they are therefore known for the times of the true high and low waters. Subtracting the appropriate semidiurnal ordinates, we have four heights per lunar day which lie upon the diurnal curve, very nearly.

(6′) The diurnal heights are then summed with the stencils, and analyzed for K_1 and O_1 in the usual way excepting that the augmenting factors 1·00287 and 1·00249 are to be used twice instead of once.

When the series is very short, and so the divisors generally quite unequal, it may be advisable to write each height of the tide twice, i. e., to regard it as the hourly ordinate immediately preceding and immediately following the time of tide.

Below is appended the results obtained from analyzing a series of tidal observations one month in extent. They show how the results obtained from high and low waters agree with the results obtained from regular hourly readings. Using the notation of §§ 59, 64, the uncorrected amplitudes and angles are really the R_c's and ζ_c's, since no corrections have been applied to them on account of the disturbing components.

SITKA, ALASKA, JULY, 1893.

Component.	From ordinates obtained from observed high and low waters. Uncorrected amplitude, R.	Uncorrected angle, ζ.	From observed hourly ordinates. Uncorrected amplitude, R.	Uncorrected angle, ζ.	Period analyzed.
	Feet.	° ′	Feet.	°	d. h.
S_2	0·897	49	0·873	53	29 13
μ_2	0·179	127	0·191	108	29 13
N_2	0·818	263	0·785	264	27 13
L_2	0·055	284	0·041	338	27 13
K_1	1·907	308	2·018	309	27 8
O_1	1·017	355	1·097	352	27 8

75. *Interpolation of hourly heights from tabulated high and low waters.*

The set of curves drawn upon a transparent sheet and described in the preceding paragraph, may be used for this purpose when the tide is wholly semidiurnal in its character.

The hourly heights of a tide of this kind may be computed by the formula,

$$\left.\begin{matrix}\text{Depression below high water}\\ \text{or elevation above low water}\end{matrix}\right\} = \frac{r}{2}\,\text{versed sine}\left(180^\circ\frac{t}{d}\right) = \frac{2\,r\,\frac{t}{d}}{0{\cdot}7+0{\cdot}6\,\frac{t}{d}},\ \text{approximately,} \quad (496)$$

where d is the duration of rise or fall, expressed in minutes, r the corresponding range or amount of the same, and t the number of minutes from high or low water; $t \leqq d$.

If the diurnal inequality is considerable, any process of interpolation is rather laborious and not always accurate, even where the shallow water components are small, because the period of the diurnal wave is not generally exactly twice that of the semidiurnal.

The range of the diurnal wave is, approximately,

$$2\,A_1 = \sqrt{(\text{HW ineq.})^2 + (\text{LW ineq.})^2}. \quad (497)$$

The high-water inequality is found by subtracting a given high-water height from the mean of the two adjacent high-water heights. Similarly for the inequality in the low waters. The range of the semidiurnal wave is, very nearly,

$$2\,A_2 = \text{mean range for the day} - \frac{(\text{HW ineq.})^2 + (\text{LW ineq.})^2}{16 \times \text{mean range for the day}}. \quad (498)$$

The position of the maximum of the semidiurnal wave can be found from values like those given in the fifth and sixth columns of the second tabulation in the preceding paragraph.

These data, with Table 19, enable one to find the position of the diurnal wave with respect to the semidiurnal, also the value of A_1.

Rules for determining the quadrant of the HW phase of the diurnal wave, i. e., the angle or phase of the diurnal at the time of HW of the semidiurnal, are as follows:

$$\begin{aligned}&\text{Sequence HHW to LLW}\begin{cases}\text{For HHW, HW phase falls in 1st quadrant.}\\ \text{For LHW, HW phase falls in 3d quadrant.}\end{cases}\\ &\text{Sequence LLW to HHW}\begin{cases}\text{For HHW, HW phase falls in 4th quadrant.}\\ \text{For LHW, HW phase falls in 2d quadrant.}\end{cases}\end{aligned} \quad (499)$$

The HW phase, when converted into time at the rate of 15° per hour, gives the time by which the HW of the diurnal wave precedes that of the semidiurnal. This angle should be taken between -180° and $+180^\circ$.

The sum of the hourly ordinates of the diurnal and semidiurnal waves give the hourly ordinates of the tide; the height of tide at any time t is

$$A_2 \cos 29^\circ\,(t - t_2) + A_1 \cos 15^\circ\,(t - t_1) \quad (500)$$

where t_2, t_1 denote the times of high water of the two waves.

76. *Remarks upon published results and tables.*

The effects of the motion of the moon's node upon the amplitudes and epochs of the components, as brought out by the harmonic analysis, were not allowed for in the earlier published results. Consequently, determinations from successive years were not *inter se* comparable. In this connection see the British Association Reports, 1878, p. 481, note, and 1883, p. 91.

Ferrel corrected the components M_2, K_2, K_1, and O_1 for such effects, but omitted the corrections for the other components similarly affected. His tables for this purpose are given upon page 304 of the Survey Report for 1878. It is to be noted that the numerical values of his $\Delta\epsilon$'s for K_1, M_2, and K_2 have the wrong signs prefixed; he seems, however, to have always corrected this in making analyses.

Initial equilibrium arguments.—In the Survey Report for 1878, Ferrel uses c, and in the Report for 1883 he uses k, to denote V_0, or the uniformly varying portion of $V_0 + u$. The k's (or c's) of K_1, K_2, and λ_2, and perhaps others, are sometimes wrong by 90° or 180°. To ascertain this, compare the k's (or c's), Report for 1878, pages 270, 303, and for 1883, page 267, with the $V_0 + u$ of Table 3. A leap year is not so convenient as a common year for this purpose, because the k's then refer to the 2d instead of the 1st of January. The smaller discrepancies shown by such comparison are due to the u of Table 1. That is

$$V_0 + u - k = u = -\delta\varepsilon^* \text{ or } +\Delta\epsilon,^\dagger \text{ very nearly.} \tag{501}$$

In this manual the origin of the day is taken as midnight. Consequently, unless otherwise stated, V_0 refers to midnight instead of noon as contemplated by the British Tidal Committee.

In Tables 1 and 3 the initial equilibrium argument of R_2 is in error by 180°.

E. Roberts has noted that the lower half of Table 8 has been incorrectly formed from the upper half. The tabular values will still hold good if for ($P =$) 95°, 100°, 105°, etc., there be substituted 175°, 170°, 165°, etc.

In using Table 31, enter columns $\begin{matrix}2,&6\\3,&7\end{matrix}$ as many days before the given date as there are degrees in $\begin{matrix}\frac{1}{2}\nu'\\ \nu'\end{matrix}$; Tables 6, 7.

Enter Table 32 as many days before the given date as there are degrees in $\frac{1}{2}\nu'$; Tables 6, 7.

Enter Table 33 as many days before the given date as there are degrees in ν'; Tables 6, 7.

77. *Harmonic analysis of tidal currents.*

The height of the tide or the vertical displacement of the surface of the sea at a given point is usually assumed to have for its expression

$$\begin{aligned} y \text{ or } h = {} & M_2' \cos(m_2 t + \arg_0 M_2 - M_2^\circ) + S_2 \cos(s_2 t + \arg_0 s_2 - S_2^\circ) \\ & + N_2' \cos(n_2 t + \arg_0 N_2 - N_2^\circ) + \quad . \quad . \quad . \\ & + K_1' \cos(k_1 t + \arg_0 K_1 - K_1^\circ) + O_1' \cos(o_1 t + \arg_0 O_1 + O_1^\circ) \\ & + P_1' \cos(p_1 t + \arg_0 P_1 - P_1^\circ) + \quad . \quad . \quad . \end{aligned} \tag{502}$$

In a canal of indefinite length it would be reasonable (according to § 22, Part I) to assume the horizontal displacement (ξ) to be of the above form, save that sines take the place of cosines, and that the amplitudes are the above amplitudes all multiplied by the same constant. The velocity of the current is $d\xi/dt$, an expression involving cosines instead of sines, and having the horizontal displacement amplitudes multiplied by the respective speeds. This shows that a diurnal component of the velocity is only about one-half as great as a semidiurnal when the two corresponding tidal components, or partial tides, are equal. On the other hand, the quarter diurnals and the sixth diurnals have a tendency to become more pronounced in the velocity. The theoretical ratio between two velocity amplitudes is not the same as the theoretical ratios between the two corresponding tidal coefficients, even though both partial tides are diurnal or both semidiurnal; but this ratio must be multiplied by the speed ratio.

---

*$\delta\varepsilon$ as used by Ferrel is the alteration in the epoch of a component which will adapt it to a particular year. It is tabulated for M_2, K_2, K_1, and O_1 upon page 268 of the Report for 1883.

†$\Delta\epsilon$ is the correction in the observed epoch of a component, due to the motion of the moon's node. It is tabulated upon page 304 of the Report for 1878, as already stated.

It is here supposed that we have hourly observations upon the velocity and direction of the current extending over one or more months. These velocities can be resolved with reference to two fixed directions—say, north and east. The velocities may be denoted by the letters used to denote the partial tides, each with a dot written above each: e. g., $\dot{M}_2$, $\dot{S}_2$, $\dot{N}_2$. The resolved portions may be distinguished by the subscripts n, e, s, or w, according to the direction—north, east, south, or west—to which they refer. The resolution of the velocities into two portions is readily effected by aid of a circle drawn upon cross-section paper and divided into degrees, together with a scale whose zero is at the center of the circle and whose straight edge always falls upon a radius.

The summations and analyses are made in the same manner as for the partial tides, because the velocity in a given direction (north, say) is assumed to be written

$$\begin{aligned} v_n = {} & \dot{M}_{2_n}{}' \cos (m_2 t + \arg_0 M_2 - \dot{M}_{2_n}{}^\circ) + \dot{S}_{2_n} \cos (s_2 t + \arg_0 S_2 - \dot{S}_{2_n}{}^\circ) \\ & + \dot{N}_{2_n}{}' \cos (n_2 t + \arg_0 N_2 - \dot{N}_{2_n}{}^\circ) \quad + \quad . \quad . \quad . \\ & + \dot{K}_{1_n}{}' \cos (k_1 t + \arg_0 K_1 - \dot{K}_{1_n}{}^\circ) \quad + \dot{O}_{1_n}{}' \cos (o_1 t + \arg_0 O_1 - \dot{O}_{1_n}{}^\circ) \\ & + \dot{P}_{1_n} \cos (p_1 t + \arg_0 P_1 - \dot{P}_{1_n}{}^\circ) \quad + \quad . \quad . \quad . \quad . \end{aligned} \tag{503}$$

For the easterly portion of the velocity e simply replaces n.

Where the water follows a fixed channel

$$\dot{M}_2 = \sqrt{\dot{M}_{2_n}{}^2 + \dot{M}_{2_e}{}^2}. \tag{504}$$

If a direction indicated by the subscript approximately coincides with the direction of flood, then for long tidal rivers we should expect $\dot{M}_2{}^\circ$ to be approximately equal to $M_2{}^\circ$; but for a small bay or harbor it should be nearer $M_2{}^\circ - 90^\circ$. If the direction indicated by the subscript approximately coincides with the direction of the ebb, $\dot{M}_2{}^\circ$ should be approximately equal to $M_2{}^\circ \pm 180^\circ$ for a long tidal river and $M_2{}^\circ + 90^\circ$ for a small bay or harbor. The same statements hold true when M_2 is replaced by S_2, N_2, K_1, etc.

In tidal rivers or in straits the currents have a nearly fixed line of motion, and so it is hardly necessary to decompose the velocities into two parts, as indicated above.

78. *To combine the various current components for any given future time.*

Combine, as in § 72, all partial north-and-south currents; likewise combine all partial east-and-west currents. With the two velocities thus obtained a rectangle of velocities can be constructed whose diagonal represents the direction and velocity of the total current.

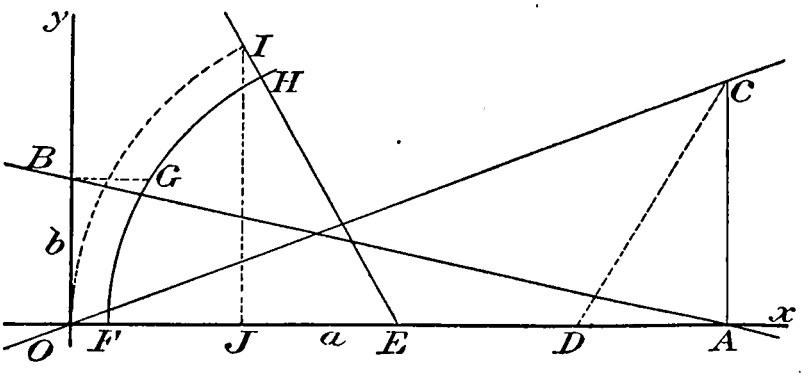

FIG. 12.

Prediction of currents.—Suppose all partial north-and-south currents to have been properly combined, and a curve drawn representing the result from hour to hour. A tide predictor which traces a continuous curve can be used for this purpose and so the labor of computation be avoided. Suppose the partial east-and-west currents to have been similarly combined and a

curve drawn. Let the two curves be placed side by side. At any given instant the direction and velocity of the total current become known upon constructing a rectangle of velocities by aid of the two curves.

The time of minimum velocity can be found either by trial or directly by the following process:

Upon glancing at the two curves the approximate time of minimum velocity can be found; it will generally lie near the point where the curve of greater amplitude crosses its axis. A straight line can be drawn closely coinciding with this curve for some distance either way from the assumed time of minimum velocity. Another straight line can be drawn nearly coinciding with the other curve for the time in question. The question then reduces to the simple geometrical problem (which has an application in § 36, Part III):

In a plane are given two straight lines referred to rectangular coördinates; it is required to find geometrically an abscissa such that the sum of the squares of the two corresponding ordinates shall be a minimum.

Suppose the equation

$$y = mx \tag{505}$$

to represent the line having the greater inclination to the x-axis and the equation

$$\frac{x}{a} + \frac{y}{b} = 1, \tag{506}$$

the other line.

When

$$x = \frac{b^2 a}{a^2 m^2 + b^2}, \tag{507}$$

the sum of the squares of the two y's becomes a minimum. The problem may now be stated: Given a, b, and m, to find x geometrically.

Let OC and AB denote the given lines; draw AC parallel to the y-axis and lay off $AD = BO = b$. Bisect AO, thus determining E; then with E as center and CD as radius, describe an arc FGH. Draw BG parallel to the x-axis; take $GH = FG$ and draw the line EHI. Take $EI = EO = \frac{1}{2}\,a$ and project I upon the x-axis in J: then is OJ the required abscissa.

79. *Rules governing the choice between Roman and Italic letters in tidal work.*

Considerable confusion having already arisen among writers upon tides in regard to the notation employed, it has been thought best to here state certain rules which have been generally followed in this manual.

Roman letters are used to denote—

1st. Quantities which are in themselves particular or definite tidal quantities at a given station. E. g., M_2, M°_2, S_2, $S_2{}^\circ$, Mn, HWI.

2d. Definite quantities intimately connected or associated with those of the kind just referred to. E. g., m_2, s_2, meaning speeds; M, S, denoting particular series of lunar and solar tides.

Italic letters are used to denote—

1st. Quantities not tidal. E. g., S = the longitude in time of the time meridian; a = the earth's radius; r = the moon's distance; I, i, = inclinations of lunar orbit; V = potential.

2d. Indefinite tidal quantities; i. e., such as must be connected with definite tidal quantities before they have a meaning. E. g., H or R used for amplitude, $V_0 + u$, F, f.

3d. Temporary or general symbols whether tidal or not. E. g., X, Y, Z, x, y, z, A, B, C, a, b, c, A°, C_2, c_2.

Blank page retained for pagination

AUXILIARY TABLES

FOR THE

REDUCTION AND PREDICTION

OF

TIDES.

[Tables 1 to 35 are appended to Part III, Appendix No. 7, Report for 1894.]

Blank page retained for pagination

TABLE 36.—*Shallow-water components.*

[Terms from y'^2.]

SEMIDIURNAL COMPONENTS.

Designation of component.		Primitive amplitude.	Speed.		Argument.	Primitive epoch.
(K_1K_1)	K_2	$\frac{1}{2}K_1^2$	$k_1+k_1=k_2$	30·0821372	2 arg K_1	$2K_1°$
(K_1O_1)	M_2	K_1O_1	$k_1+o_1=m_2$	28·9841042	arg K_1 + arg O_1	$K_1°+O_1°$
(K_1P_1)	S_2	K_1P_1	$k_1+p_1=s_2$	30·0000000	arg K_1 + arg P_1	$K_1°+P_1°$
(O_1O_1)	O_2	$\frac{1}{2}O_1^2$	$o_1+o_1=o_2$	27·8860712	2 arg O_1	$2O_1°$
(O_1P_1)		O_1P_1	o_1+p_1	28·9019670	arg O_1 + arg P_1	$O_1°+P_1°$
(P_1P_1)	P_2	$\frac{1}{2}P_1^2$	$p_1+p_1=p_2$	29·9178628	2 arg P_1	$2P_1°$

COMPONENTS OF LONG PERIOD.

$(K_1\sim K_1)$		$\frac{1}{2}K_1^2$	$k_1-k_1=o$	o	o	o
$(K_1\sim O_1)$	Mf	K_1O_1	$k_1-o_1=mf$	1·0980330	arg K_1 − arg O_1	$K_1°-O_1°$
$(K_1\sim P_1)$	Ssa	K_1P_1	$k_1-p_1=ssa$	0·0821372	arg K_1 − arg P_1	$K_1°-P_1°$
$(O_1\sim O_1)$		$\frac{1}{2}O_1^2$	$o_1-o_1=o$	o	o	o
$(O_1\sim P_1)$	MSf	O_1P_1	$p_1-o_1=msf$	1·0158958	arg P_1 − arg O_1	$P_1°-O_1°$
$(P_1\sim P_1)$		$\frac{1}{2}P_1^2$	$p_1-p_1=o$	o	o	o

TERDIURNAL COMPONENTS.

(M_2K_1)	MK	M_2K_1	$m_2+k_1=mk$	44·0251728	arg M_2 + arg K_1	$M_2°+K_1°$
(M_2O_1)	2MK	M_2O_1	m_2+o_1	42·9271398	arg M_2 + arg O_1	$M_2°+O_1°$
(M_2P_1)		M_2P_1	m_2+p_1	43·9430356	arg M_2 + arg P_1	$M_2°+P_1°$
(S_2K_1)		S_2K_1	s_2+k_1	45·0410686	arg S_2 + arg K_1	$S_2°+K_1°$
(S_2O_1)		S_2O_1	s_2+o_1	43·9430356	arg S_2 + arg O_1	$S_2°+O_1°$
(S_2P_1)		S_2P_1	s_2+p_1	44·9589314	arg S_2 + arg P_1	$S_2°+P_1°$
(N_2K_1)		N_2K_1	n_2+k_1	43·4807982	arg N_2 + arg K_1	$N_2°+K_1°$
(N_2O_1)		N_2O_1	n_2+o_1	42·3827652	arg N_2 + arg O_1	$N_2°+O_1°$
(N_2P_1)		N_2P_1	n_2+p_1	43·3986610	arg N_2 + arg P_1	$N_2°+P_1°$
(K_2K_1)	K_3	K_2K_1	$3k_1$	45·1232058	3 arg K_1	$3K_1°$
(K_2O_1)	MK	K_2O_1	$k_2+o_1=mk$	44·0251728	arg K_2 + arg O_1	$K_2°+O_1°$
(K_2P_1)		K_2P_1	k_2+p_1	45·0410686	arg K_2 + arg P_1	$K_2°+P_1°$
(L_2K_1)		L_2K_1	l_2+k_1	44·5695474	arg L_2 + arg K_1	$L_2°+K_1°$
(L_2O_1)		L_2O_1	l_2+o_1	43·4715144	arg L_2 + arg O_1	$L_2°+O_1°$
(L_2P_1)		L_2P_1	l_2+p_1	44·4874102	arg L_2 + arg P_1	$L_2°+P_1°$

DIURNAL COMPONENTS.

$(M_2\sim K_1)$	O_1	M_2K_1	$m_2-k_1=o_1$	13·9430356	arg M_2 − arg K_1	$M_2°-K_1°$
$(M_2\sim O_1)$	K_1	M_2O_1	$m_2-o_1=k_1$	15·0410686	arg M_2 − arg O_1	$M_2°-O_1°$
$(M_2\sim P_1)$		M_2P_1	m_2-p_1	14·0251728	arg M_2 − arg P_1	$M_2°-P_1°$
$(S_2\sim K_1)$	P_1	S_2K_1	$s_2-k_1=p_1$	14·9589314	arg S_2 − arg K_1	$S_2°-K_1°$
$(S_2\sim O_1)$		S_2O_1	s_2-o_1	16·0569644	arg S_2 − arg O_1	$S_2°-O_1°$
$(S_2\sim P_1)$	K_1	S_2P_1	$s_2-p_1=k_1$	15·0410686	arg S_2 − arg P_1	$S_2°-P_1°$
$(N_2\sim K_1)$	Q_1	N_2K_1	$n_2-k_1=q_1$	13·3986610	arg N_2 − arg K_1	$N_2°-K_1°$
$(N_2\sim O_1)$	$[M_1]$	N_2O_1	$n_2-o_1=[m_1]$	14·4966940	arg N_2 − arg O_1	$N_2°-O_1°$
$(N_2\sim P_1)$		N_2P_1	n_2-p_1	13·4807982	arg N_2 − arg P_1	$N_2°-P_1°$
$(K_2\sim K_1)$	K_1	K_2K_1	$k_2-k_1=k_1$	15·0410686	arg K_2 − arg K_1	$K_2°-K_1°$
$(K_2\sim O_1)$		K_2O_1	k_2-o_1	16·1391016	arg K_2 − arg O_1	$K_2°-O_1°$
$(K_2\sim P_1)$		K_2P_1	k_2-p_1	15·1232058	arg K_2 − arg P_1	$K_2°-P_1°$
$(L_2\sim K_1)$		L_2K_1	l_2-k_1	14·4874102	arg L_2 − arg K_1	$L_2°-K_1°$
$(L_2\sim O_1)$	J_1	L_2O_1	$l_2-o_1=j_1$	15·5854432	arg L_2 − arg O_1	$L_2°-O_1°$
$(L_2\sim P_1)$		L_2P_1	l_2-p_1	14·5695474	arg L_2 − arg P_1	$L_2°-P_1°$

For a description of this table, see § 48, Part II.

For sake of clearness we have supposed (AB) to denote a component whose speed is $a+b$, and $(A\sim B)$ a component whose speed is $a\sim b$.

TABLE 36.—*Shallow-water components*—Continued.

[Terms from y'^2.]

QUARTER-DIURNAL COMPONENTS.

Designation of component.		Primitive amplitude.	Speed.		Argument.	Primitive epoch.
(M_2M_2)	M_4	$\frac{1}{2}\ M_2^2$	$m_2+m_2=m_4$	57·9682084	2 arg M_2	$2\ M_2{}^\circ$
(M_2S_2)	MS	M_2S_2	m_2+s_2	58·9841042	arg M_2 + arg S_2	$M_2{}^\circ+S_2{}^\circ$
(M_2N_2)	MN	M_2N_2	$m_2+n_2=mn$	57·4238338	arg M_2 + arg N_2	$M_2{}^\circ+N_2{}^\circ$
(M_2K_2)		M_2K_2	m_2+k_2	59·0662414	arg M_2 + arg K_2	$M_2{}^\circ+K_2{}^\circ$
(M_2L_2)		M_2L_2	m_2+l_2	58·5125830	arg M_2 + arg L_2	$M_2{}^\circ+L_2{}^\circ$
(S_2S_2)	S_4	$\frac{1}{2}\ S_2^2$	$s_2+s_2=s_4$	60·0000000	2 arg S_2	$2\ S_2{}^\circ$
(S_2N_2)		S_2N_2	s_2+n_2	58·4397296	arg S_2 + arg N_2	$S_2{}^\circ+N_2{}^\circ$
(S_2K_2)	R_4	S_2K_2	$s_2+k_2=r_4$	60·0821372	arg S_2 + arg K_2	$S_2{}^\circ+K_2{}^\circ$
(S_2L_2)		S_2L_2	s_2+l_2	59·5284788	arg S_2 + arg L_2	$S_2{}^\circ+L_2{}^\circ$
(N_2N_2)	N_4	$\frac{1}{2}\ N_2^2$	$n_2+n_2=n_4$	56·8794592	2 arg N_2	$2\ N_2{}^\circ$
(N_2K_2)		N_2K_2	n_2+k_2	58·5218668	arg N_2 + arg K_2	$N_2{}^\circ+K_2{}^\circ$
(N_2L_2)		N_2L_2	n_2+l_2	57·9682084	arg N_2 + arg L_2	$N_2{}^\circ+L_2{}^\circ$
(K_2K_2)	K_4	$\frac{1}{2}\ K_2^2$	$k_2+k_2=k_4$	60·1642744	2 arg K_2	$2\ K_2{}^\circ$
(K_2L_2)		K_2L_2	k_2+l_2	59·6106160	arg K_2 + arg L_2	$K_2{}^\circ+L_2{}^\circ$
(L_2L_2)	L_4	$\frac{1}{2}\ L_2^2$	$l_2+l_2=l_4$	59·0569576	2 arg L_2	$2L_2{}^\circ$

COMPONENTS OF LONG PERIOD.

$(M_2\sim M_2)$		$\frac{1}{2}\ M_2^2$	$m_2-m_2=o$	o	o	o
$(M_2\sim S_2)$	MSf	M_2S_2	$s_2-m_2=msf$	1·0158958	arg S_2 − arg M_2	$S_2{}^\circ-M_2{}^\circ$
$(M_2\sim N_2)$	Mm	M_2N_2	$m_2-n_2=mm$	0·5443746	arg M_2 − arg N_2	$M_2{}^\circ-N_2{}^\circ$
$(M_2\sim K_2)$	Mf	M_2K_2	$m_2-k_2=mf$	1·0980330	arg M_2 − arg K_2	$M_2{}^\circ-K_2{}^\circ$
$(M_2\sim L_2)$	Mm	M_2L_2	$l_2-m_2=mm$	0·5443746	arg L_2 − arg M_2	$L_2{}^\circ-M_2{}^\circ$
$(S_2\sim S_2)$		$\frac{1}{2}\ S_2^2$	$s_2-s_2=o$	o	o	o
$(S_2\sim N_2)$		S_2N_2	s_2-n_2	1·5602704	arg S_2 − arg N_2	$S_2{}^\circ-N_2{}^\circ$
$(S_2\sim K_2)$	Ssa	S_2K_2	$k_2-s_2=ssa$	0·0821372	arg K_2 − arg S_2	$K_2{}^\circ-S_2{}^\circ$
$(S_2\sim L_2)$		S_2L_2	s_2-l_2	0·4715212	arg S_2 − arg L_2	$S_2{}^\circ-L_2{}^\circ$
$(N_2\sim N_2)$		$\frac{1}{2}\ N_2^2$	$n_2-n_2=o$	o	o	o
$(N_2\sim K_2)$		N_2K_2	k_2-n_2	1·6424076	arg K_2 − arg N_2	$K_2{}^\circ-N_2{}^\circ$
$(N_2\sim L_2)$		K_2L_2	l_2-n_2	1·0887492	arg L_2 − arg N_2	$L_2{}^\circ-N_2{}^\circ$
$(K_2\sim K_2)$		$\frac{1}{2}\ K_2^2$	$k_2-k_2=o$	o	o	o
$(K_2\sim L_2)$		K_2L_2	k_2-l_2	0·5536584	arg K_2 − arg L_2	$K_2{}^\circ-L_2{}^\circ$
$(L_2\sim L_2)$		$\frac{1}{2}\ L_2^2$	$l_2-l_2=o$	o	o	o

TABLE 36.—*Shallow-water components*—Continued.

[Terms from y'^3 or $y' \times y'^2$.]

ONE-SIXTH-DIURNAL COMPONENTS.

Designation of component.		Primitive amplitude.	Speed.		Argument.	Primitive epoch.
$(M_2M_2M_2)$	M_6	$\frac{1}{2}M_2^3$	$3\,m_2 = m_6$	86·9523126	$3\arg M_2$	$3\,M_2^\circ$
$(M_2M_2S_2)$		$M_2^2S_2$	$2\,m_2 + s_2$	87·9682084	$2\arg M_2 + \arg S_2$	$2\,M_2^\circ + S_2^\circ$
$(M_2M_2N_2)$		$M_2^2N_2$	$2\,m_2 + n_2$	86·4079380	$2\arg M_2 + \arg N_2$	$2\,M_2^\circ + N_2^\circ$
$(M_2M_2K_2)$		$M_2^2K_2$	$2\,m_2 + k_2$	88·0503456	$2\arg M_2 + \arg K_2$	$2\,M_2^\circ + K_2^\circ$
$(M_2M_2L_2)$		$M_2^2L_2$	$2\,m_2 + l_2$	87·4966872	$2\arg M_2 + \arg L_2$	$2\,M_2^\circ + L_2^\circ$
$(M_2S_2S_2)$		$\frac{1}{2}M_2S_2^2$	$2\,s_2 + m_2$	88·9841042	$2\arg S_2 + \arg M_2$	$M_2' + 2\,S_2^\circ$
$(M_2S_2N_2)$		$M_2S_2N_2$	$m_2 + s_2 + n_2$	87·4238338	$\arg M_2 + \arg S_2 + \arg N_2$	$M_2^\circ + S_2^\circ + N_2^\circ$
$(M_2S_2K_2)$		$M_2S_2K_2$	$m_2 + s_2 + k_2$	89·0662414	$\arg M_2 + \arg S_2 + \arg K_2$	$M_2^\circ + S_2^\circ + K_2^\circ$
$(M_2S_2L_2)$		$M_2S_2L_2$	$m_2 + s_2 + l_2$	88·5125830	$\arg M_2 + \arg S_2 + \arg L_2$	$M_2^\circ + S_2^\circ + L_2^\circ$
$(S_2M_2M_2)$		$\frac{1}{2}S_2M_2^2$	$2\,m_2 + s_2$	87·9682084	$2\arg M_2 + \arg S_2$	$2\,M_2^\circ + S_2^\circ$
$(S_2M_2S_2)$		$M_2S_2^2$	$m_2 + 2\,s_2$	88·9841042	$\arg M_2 + 2\arg S_2$	$M_2^\circ + 2\,S_2^\circ$
$(S_2M_2N_2)$		$M_2S_2N_2$	$m_2 + s_2 + n_2$	87·4238338	$\arg M_2 + \arg S_2 + \arg N_2$	$M_2^\circ + S_2^\circ + N_2^\circ$
$(S_2M_2K_2)$		$M_2S_2K_2$	$m_2 + s_2 + k_2$	89·0662414	$\arg M_2 + \arg S_2 + \arg K_2$	$M_2^\circ + S_2^\circ + K_2^\circ$
$(S_2M_2L_2)$		$M_2S^2L_2$	$m_2 + s_2 + l_2$	88·5125830	$\arg M_2 + \arg S_2 + \arg L_2$	$M_2^\circ + S_2^\circ + L_2^\circ$
$(S_2S_2S_2)$	S_6	$\frac{1}{2}S_2^3$	$3\,s_2 = s_6$	90·0000000	$3\arg S_2$	$3\,S_2^\circ$
$(S_2S_2N_2)$		$S_2^2N_2$	$2\,s_2 + n_2$	88·4397296	$2\arg S_2 + \arg N_2$	$2\,S_2^\circ + N_2^\circ$
$(S_2S_2K_2)$		$S_2^2K_2$	$2\,s_2 + k_2$	90·0821372	$2\arg S_2 + \arg K_2$	$2\,S_2^\circ + K_2^\circ$
$(S_2S_2L_2)$		$S_2^2L_2$	$2\,s_2 + l_2$	89·5284788	$2\arg S_2 + \arg L_2$	$2\,S_2^\circ + L_2^\circ$

SEMIDIURNAL COMPONENTS.

$(M_2 \sim M_2M_2)$	M_2	$\frac{1}{2}M_2^3$	m_2	28·9841042	$\arg M_2$	M_2°
$(M_2 \sim M_2S_2)$	S_2	$M_2^2S_2$	s_2	30·0000000	$\arg S_2$	S_2°
$(M_2 \sim M_2N_2)$	N_2	$M_2^2N_2$	n_2	28·4397296	$\arg N_2$	N_2°
$(M_2 \sim M_2K_2)$	K_2	$M_2^2K_2$	k_2	30·0821372	$\arg K_2$	K_2°
$(M_2 \sim M_2L_2)$	L_2	$M_2^2L_2$	l_2	29·5284788	$\arg L_2$	L_2°
$(M_2 \sim S_2S_2)$	2 SM	$\frac{1}{2}M_2S_2^2$	$2\,s_2 - m_2$	31·0158958	$2\arg S_2 - \arg M_2$	$2\,S_2^\circ - M_2^\circ$
$(M_2 \sim S_2N_2)$	λ_2	$M_2S_2N_2$	$s_2 + n_2 - m_2 = \lambda_2$	29·4556254	$\arg S_2 + \arg N_2 - \arg M_2$	$S_2^\circ + N_2^\circ - M_2^\circ$
$(M_2 \sim S_2K_2)$		$M_2S_2K_2$	$s_2 + k_2 - m_2$	31·0980330	$\arg S_2 + \arg K_2 - \arg M_2$	$S_2^\circ + K_2^\circ - M_2^\circ$
$(M_2 \sim S_2L_2)$		$M_2S_2L_2$	$s_2 + l_2 - m_2$	30·5443746	$\arg S_2 + \arg L_2 - \arg M_2$	$S_2^\circ + L_2^\circ - M_2^\circ$
$(S_2 \sim M_2M_2)$	2 MS	$\frac{1}{2}S_2M_2^2$	$2\,m_2 - s_2 = \mu_2$	27·9682084	$2\arg M_2 - \arg S_2$	$2\,M_2^\circ - S_2^\circ$
$(S_2 \sim M_2S_2)$		M_2S_2	m_2	28·9841042	$\arg M_2$	M_2°
$(S_2 \sim M_2N_2)$		$M_2S_2N_2$	$m_2 + n_2 - s_2$	27·4238338	$\arg M_2 + \arg N_2 - \arg S_2$	$M_2^\circ + N_2^\circ - S_2^\circ$
$(S_2 \sim M_2K_2)$		$M_2S_2K_2$	$m_2 + k_2 - s_2$	29·0662414	$\arg M_2 + \arg K_2 - \arg S_2$	$M_2^\circ + K_2^\circ - S_2^\circ$
$(S_2 \sim M_2L_2)$	ν_2	$M_2S_2L_2$	$m_2 + l_2 - s_2 = \nu_2$	28·5125830	$\arg M_2 + \arg K_2 - \arg S_2$	$M_2^\circ + L_2^\circ - S_2^\circ$
$(S_2 \sim S_2S_2)$	S_2	$\frac{1}{2}S_2^3$	s_2	30·0000000	$\arg S_2$	S_2°
$(S_2 \sim S_2N_2)$	N_2	$S_2^2N_2$	n_2	28·4397296	$\arg N_2$	N_2°
$(S_2 \sim S_2K_2)$	K_2	$S_2^2K_2$	k_2	30·0821372	$\arg K_2$	K_2°
$(S_2 \sim S_2L_2)$	L_2	$S_2^2L_2$	l_2	29·5284788	$\arg L_2$	L_2°

[Terms from y'^4 or $y' \times y'^3$.]

ONE-EIGHTH-DIURNAL COMPONENTS.

(M_2M_6)	M_8	$\frac{1}{2}M_2^4$	$4\,m_2 = m_8$	115·9364168	$4\arg M_2$	$4\,M_2^\circ$
(M_2S_6)		$\frac{1}{2}M_2S_2^3$	$3\,s_2 + m_2$	118·9841042	$3\arg S_2 + \arg M_2$	$3\,S_2^\circ + M_2^\circ$
(S_2M_6)		$\frac{1}{2}S_2M_2^3$	$3\,m_2 + s_2$	116·9523126	$3\arg M_2 + \arg S_2$	$3\,M_2^\circ + S_2^\circ$
(S_2S_6)	S_8	$\frac{1}{2}S_2^4$	$4\,s_2 = s_8$	120·0000000	$4\arg S_2$	$4\,S_2^\circ$

QUARTER-DIURNAL COMPONENTS.

$(M_2 \sim M_6)$	M_4	$\frac{1}{2}M_2^4$	$2\,m_2 = m_4$	57·9682084	$2\arg M_2$	$2\,M_2^\circ$
$(M_2 \sim S_6)$		$\frac{1}{2}M_2S_2^3$	$3\,s_2 - m_2$	61·0158958	$3\arg S_2 - \arg M_2$	$3\,S_2^\circ - M_2^\circ$
$(S_2 \sim M_6)$		$\frac{1}{2}S_2M_2^3$	$3\,m_2 - s_2$	56·9523126	$3\arg M_2 - \arg S_2$	$3\,M_2^\circ - S_2^\circ$
$(S_2 \sim S_6)$	S_4	$\frac{1}{2}S_2^4$	$2\,s_2 = s_4$	60·0000000	$2\arg S_2$	$2\,S_2^\circ$

TABLE 37.—*The theoretical amplitudes of some of the more important components for every 5 degrees of latitude.*

λ	$\cos^2\lambda$	$\sin 2\lambda$	$\frac{1}{2}-\frac{3}{2}\sin^2\lambda$	M_2	N_2	S_2	K_1	O_1	P_1	Mf
°				*Feet.*	*Feet.*	*Feet.*	*Feet.*	*Feet.*	*Feet.*	*Feet.*
+90	0·0000	0·0000	−1·0000	0·000	0·000	0·000	0·000	0·000	0·000	−0·138
+85	0·0076	0·1736	−0·9886	0·006	0·001	0·003	+0·081	+0·058	+0·027	−0·136
+80	0·0301	0·3420	−0·9548	0·024	0·005	0·011	+0·160	+0·114	+0·053	−0·132
+75	0·0670	0·5000	−0·8995	0·054	0·010	0·025	+0·233	+0·166	+0·077	−0·124
+70	0·1170	0·6428	−0·8245	0·094	0·018	0·044	+0·300	+0·213	+0·099	−0·114
+65	0·1786	0·7660	−0·7321	0·143	0·028	0·066	+0·358	+0·254	+0·118	−0·101
+60	0·2500	0·8660	−0·6250	0·200	0·039	0·093	+0·404	+0·287	+0·134	−0·086
+55	0·3290	0·9397	−0·5065	0·263	0·051	0·122	+0·439	+0·312	+0·145	−0·070
+50	0·4132	0·9848	−0·3802	0·330	0·064	0·154	+0·460	+0·327	+0·152	−0·052
+45	0·5000	1·0000	−0·2500	0·400	0·077	0·186	+0·467	+0·332	+0·154	−0·034
+40	0·5868	0·9848	−0·1198	0·469	0·091	0·218	+0·460	+0·327	+0·152	−0·017
+35	0·6711	0·9397	+0·0066	0·537	0·104	0·250	+0·439	+0·312	+0·145	+0·001
+30	0·7500	0·8660	+0·1250	0·600	0·116	0·279	+0·404	+0·287	+0·134	+0·017
+25	0·8214	0·7660	+0·2321	0·657	0·127	0·306	+0·358	+0·254	+0·118	+0·032
+20	0·8830	0·6428	+0·3245	0·706	0·137	0·329	+0·300	+0·213	+0·099	+0·045
+15	0·9330	0·5000	+0·3995	0·746	0·145	0·347	+0·233	+0·166	+0·077	+0·055
+10	0·9698	0·3420	+0·4547	0·776	0·150	0·361	+0·160	+0·114	+0·053	+0·063
+ 5	0·9924	0·1736	+0·4886	0·794	0·154	0·369	+0·081	+0·058	+0·027	+0·067
0	1·0000	0·0000	+0·5000	0·800	0·155	0·372	+0·000	+0·000	+0·000	+0·069
− 5	0·9924	−0·1736	+0·4886	0·794	0·154	0·369	−0·081	−0·058	−0·027	+0·067
−10	0·9698	−0·3420	+0·4547	0·776	0·150	0·361	−0·160	−0·114	−0·053	+0·063
−15	0·9330	−0·5000	+0·3995	0·746	0·145	0·347	−0·233	−0·166	−0·077	+0·055
−20	0·8830	−0·6428	+0·3245	0·706	0·137	0·329	−0·300	−0·213	−0·099	+0·045
−25	0·8214	−0·7660	+0·2321	0·657	0·127	0·306	−0·358	−0·254	−0·118	+0·032
−30	0·7500	−0·8660	+0·1250	0·600	0·116	0·279	−0·404	−0·287	−0·134	+0·017
−35	0·6711	−0·9397	+0·0066	0·537	0·104	0·250	−0·439	−0·312	−0·145	+0·001
−40	0·5868	−0·9848	−0·1198	0·469	0·091	0·218	−0·460	−0·327	−0·152	−0·017
−45	0·5000	−1·0000	−0·2500	0·400	0·077	0·186	−0·467	−0·332	−0·154	−0·034
−50	0.4132	−0·9848	−0·3802	0·330	0·064	0·154	−0·460	−0·327	−0·152	−0·052
−55	0·3290	−0·9397	−0·5065	0·263	0·051	0·122	−0·439	−0·312	−0·145	−0·070
−60	0·2500	−0·8660	−0·6250	0.200	0·039	0·093	−0·404	−0·287	−0·134	−0·086
−65	0·1786	−0·7660	−0·7321	0·143	0·028	0·066	−0·358	−0·254	−0·118	−0·101
−70	0·1170	−0·6428	−0·8245	0·094	0·018	0·044	−0·300	−0·213	−0·099	−0·114
−75	0·0670	−0·5000	−0·8995	0·054	0·010	0·025	−0·233	−0·166	−0·077	−0·124
−80	0·0301	−0·3420	−0·9548	0·024	0·005	0·011	−0·160	−0·114	−0·053	−0·132
−85	0·0076	−0·1736	−0·9886	0·006	0·001	0·003	−0·081	−0·058	−0·027	−0·136
−90	0·0000	0·0000	−1·0000	0·000	0·000	0·000	0·000	0·000	0·000	−0·138

Tabular value $= \left[\frac{3}{2}\frac{M}{E}\left(\frac{a}{c}\right)^3 a = 1{\cdot}760\right] \times$ latitude factor × coefficient. The latitude factor is given in column 2, 3, or 4; the coefficient in Table 1. For this table it is assumed that $\frac{M}{E}=\frac{1}{81{\cdot}07}$, $\frac{a}{c}=\frac{1}{60{\cdot}34}$, $a = 20\ 902\ 000$ feet, according to Harkness, Solar Parallax, pages 138, 140, using a mean radius of the earth instead of the equatorial radius. The negative amplitude signifies that the phase of the tide is altered by 180°. The north latitude is +, the south −.

TABLE 38.—*Augmenting factors.*

Components.		Subscript. 1	2	3	4	5	6	7	8
S		1·0000 0·0000	1·0000 0·0000	1·0000 0·0000	1·0000 0·0000	1·0000 0·0000	1·0000 0·0000	1·0000 0·0000	1·0000 0·0000
		Group covers one solar hour.							
J	2 SM	1·00307 0·001331	1·01231 0·005313						
K	P, R, T	1·00287 0·001246	1·01158 0·004998	1·02632 0·011281	1·04746 0·020138				
L	λ, MS	1·00273 0·001196	1·01116 0·004819	1·02534 0·010868	1·04568 0·019400				
M		1·00266 0·001153	1·01075 0·004644	1·02440 0·010470	1·04396 0·018683	1·06989 0·029339	1·10283 0·042507	1·14363 0·058286	1·19343 0·076797
N	ν	1·00256 0·001111	1·01033 0·004464						
O	2 N, μ	1·00249 0·001081	1·00994 0·004295	1·02256 0·009691	1·04300 0·018285				
OO		1·00333 0·001442							
Q	ρ	1·00227 0·000983							
2 Q		1·00209 0·000906							
MN	2 MK	1·00261 0·001132	1·01055 0·004557	1·02394 0·010274	1·04311 0·018331				
MK		1·00274 0·001189	1·01102 0·004760	1·02503 0·010739					
		Group covers one component hour.							
All		1·00286 0·001240	1·01152 0·004974	1·02617 0·011219	1·04720 0·020030	1·07513 0·031461	1·11072 0·045605	1·15496 0·062571	1·20920 0·082498

The tabular value for any component other than S is

$$\frac{\text{arc } c\,\tau}{\text{chord } c\,\tau}$$

where τ = the length of the group. It is a solar hour when each component hour receives one, and only one, hourly height; it may be regarded as a component hour when all hourly heights are used in the summation. (See § 57, Part II.)

Tides of long period.

When all daily means are used, the factors given under the heading "Group covers one component hour" are to be applied to the long-period tides, the subscripts referring to the year or month, instead of the day as in the case of tides of short period. When attention is paid to the arrows, Table 43, in making the summations, the augmenting factors due to using solar instead of component time, are given by the above formula by putting τ = one solar day, and c = mf, msf, mm. The results are: 1.00887 (log. = 0.003835), 1.00759 (log. = 0.003282), 1.00217 (log. = 0.000941). In case of any long-period tide there is, besides the augmenting factor proper, what might be called a group factor, due to using the mean of 24 heights each day. The numerical values just given are also the group factors for Mf, MSf, and Mm.

TABLE 39.—*Values of b—a and of 24×(b—a).*

DIURNALS.

A	B									
	J_1	K_1	M_1	O_1	OO	P_1	Q_1	2Q	S_1	ρ_1
J_1	0	− 0·5443747	− 1·0933912	− 1·6424077	+ 0·5536583	− 0·6265119	− 2·1867824	− 2·7311571	− 0·5854433	2·1139289
	0	−13·064993	−26·241389	−39·417785	+13·287799	−15·036286	−52·482778	−65·547770	−14·050639	- 50·734294
K_1	+ 0·5443747	0	− 0·5490165	− 1·0980330	+ 1·0980330	− 0·0821372	− 1·6424077	− 2·1867824	− 0·0410686	- 1·5695542
	+13·064993	0	-- 13·176396	−26·352792	+26·352792	− 1·971293	−39·417785	−52·482778	− 0·985646	- 37·669301
M_1	+ 1·0933912	+ 0·5490165	0	-- 0·5490165	+ 1·6470495	+ 0·4668793	− 1·0933912	− 1·6377659	+ 0·5079479	-- 1·0205377
	+26·241389	+13·176396	0	−13·176396	+39·529188	+11·205103	−26·241389	−39·306382	+12·190750	−24·492905
O_1	+ 1·6424077	+ 1·0980330	+ 0·5490165	0	+ 2·1960660	+ 1·0158958	− 0·5443747	− 1·0887494	+ 1·0569644	− 0·4715212
	+39·417785	+26·352792	+13·176396	0	+52·705584	+24·381499	−13·064993	−26·129986	+25·367146	−11·316509
OO	− 0·5536583	- 1·0980330	− 1·6470495	− 2·1960660	0	− 1·1801702	− 2·7404407	− 3·2848154	− 1·1391016	− 2·6675872
	−13·287799	−26·352792	−39·529188	−52·705584	0	−28·324085	−65·770577	−78·835570	−27·338438	--64·022093
P_1	+ 0·6265119	+ 0·0821372	-- 0·4668793	− 1·0158958	+ 1·1801702	0	− 1·5602705	− 2·1046452	+ 0·0410686	-- 1·4874170
	+15·036286	+ 1·971293	−11·205103	−24·381499	+28·324085	0	−37·446492	−50·511485	+ 0·985646	−35·698008
Q_1	+ 2·1867824	+ 1·6424077	+ 1·0933912	+ 0·5443747	+ 2·7404407	+ 1·5602705	0	− 0·5443747	+ 1·6013391	+ 0·0728535
	+52·482778	+39·417785	+26·241389	+13·064993	+65·770577	+37·446492	0	−13·064993	+38·432138	+ 1·748484
2Q	+ 2·7311571	+ 2·1867824	+ 1·6377659	+ 1·0887494	+ 3·2848154	+ 2·1046452	+ 0·5443747	0	+ 2·1457138	+ 0·6172282
	+65·547770	+52·482778	+39·306382	+26·129986	+78·835570	+50·511485	+13·064993	0	+51·497131	+14·813477
S_1	+ 0·5854433	+ 0·0410686	− 0·5079479	− 1·0569644	+ 1·1391016	− 0·0410686	− 1·6013391	− 2·1457138	0	− 1·5284856
	+14·050639	+ 0·985646	−12·190750	−25·367146	+27·338438	− 0·985646	−38·432138	−51·497131	0	- 36·683654
ρ_1	+ 2·1139289	+ 1·5695542	+ 1·0205377	+ 0·4715212	+ 2·6675872	+ 1·4874170	− 0·0728535	− 0·6172282	+ 1·5284856	0
	+50·734294	+37·669301	+24·492905	+11·316509	+64·022093	+35·698008	− 1·748484	--14·813477	+36·683654	0

TABLE 39.—*Values of b—a and of 24×(b—a)*—Continued.

SEMIDIURNALS.

A	*B*											
	K_2	L_2	M_2	N_2	2N	R_2	S_2	T_2	λ_2	μ_2	ν_2	2SM
K_2	0 0	− 0·5536584 −13·287802	− 1·0980330 −26·352792	− 1·6424076 −39·417782	− 2·1867824 −52·482778	− 0·0410686 − 0·985646	− 0·0821372 − 1·971293	− 0·1232058 − 2·956939	− 0·6265118 −15·036283	− 2·1139288 −50·734291	− 1·5695542 −37·669301	+ 0·9337586 +22·410206
L_2	+ 0·5536584 +13·287802	0 0	− 0·5443746 −13·064990	− 1·0887492 −26·129981	− 1·6331240 −39·194976	+ 0·5125898 +12·302155	+ 0·4715212 +11·316509	+ 0·4304526 +10·330862	− 0·0728534 − 1·748482	− 1·5602704 −37·446490	− 1·0158958 −24·381499	+ 1·4874170 +35·698008
M_2	+ 1·0980330 +26·352792	+ 0·5443746 +13·064990	0 0	− 0·5443746 −13·064990	− 1·0887494 −26·129986	+ 1·0569644 +25·367146	+ 1·0158958 +24·381499	+ 0·9748272 +23·395853	+ 0·4715212 +11·316509	− 1·0158958 −24·381499	− 0·4715212 −11·316509	+ 2·0317916 +48·762998
N_2	+ 1·6424076 +39·417782	+ 1·0887492 +26·129981	+ 0·5443746 +13·064990	0 0	− 0·5443748 −13·064995	+ 1·6013390 +38·432136	+ 1·5602704 +37·446490	+ 1·5192018 +36·460843	+ 1·0158958 +24·381499	− 0·4715212 −11·316509	+ 0·0728534 + 1·748482	+ 2·5761662 +61·827989
2N	+ 2·1867824 +52·482778	+ 1·6331240 +39·194976	+ 1·0887494 +26·129986	+ 0·5443748 +13·064995	0 0	+ 2·1457138 +51·497131	+ 2·1046452 +50·511485	+ 2·0635766 +49·525838	+ 1·5602706 +37·446494	+ 0·0728536 + 1·748486	+ 0·6172282 +14·813477	+ 3·1205410 +74·892984
R_2	+ 0·0410686 + 0·985646	− 0·5125898 −12·302155	− 1·0569644 −25·367146	− 1·6013390 −38·432136	− 2·1457138 −51·497131	0 0	− 0·0410686 − 0·985646	− 0·0821372 − 1·971293	− 0·5854432 −14·050637	− 2·0728602 −49·748645	− 1·5284856 −36·683654	+ 0·9748272 +23·395853
S_2	+ 0·0821372 + 1·971293	− 0·4715212 −11·316509	− 1·0158958 −24·381499	− 1·5602704 −37·446490	− 2·1046452 −50·511485	+ 0·0410686 + 0·985646	0 0	− 0·0410686 − 0·985646	− 0·5443746 −13·064990	− 2·0317916 −48·762998	− 1·4874170 −35·698008	+ 1·0158958 +24·381499
T_2	+ 0·1232058 + 2·956939	− 0·4304526 −10·330862	− 0·9748272 −23·395853	− 1·5192018 −36·460843	− 2·0635766 −49·525838	+ 0·0821372 + 1·971293	+ 0·0410686 + 0·985646	0 0	− 0·5033060 −12·079344	− 1·9907230 −47·777352	− 1·4463484 −34·712362	+ 1·0569644 +25·367146
λ_2	+ 0·6265118 +15·036283	+ 0·0728534 + 1·748482	− 0·4715212 −11·316509	− 1·0158958 −24·381499	− 1·5602706 −37·446494	+ 0·5854432 +14·050637	+ 0·5443746 +13·064990	+ 0·5033060 +12·079344	0 0	− 1·4874170 −35·698008	− 0·9430424 −22·633018	+ 1·5602704 +37·446490
μ_2	+ 2·1139288 +50·734291	+ 1·5602704 +37·446490	+ 1·0158958 +24·381499	+ 0·4715212 +11·316509	− 0·0728536 − 1·748486	+ 2·0728602 +49·748645	+ 2·0317916 +48·762998	+ 1·9907230 +47·777352	+ 1·4874170 +35·698008	0 0	+ 0·5443746 +13·064990	+ 3·0476874 +73·144498
ν_2	+ 1·5695542 +37·669301	+ 1·0158958 +24·381499	+ 0·4715212 +11·316509	− 0·0728534 − 1·748482	− 0·6172282 −14·813477	+ 1·5284856 +36·683654	+ 1·4874170 +35·698008	+ 1·4463484 +34·712362	+ 0·9430424 +22·633018	− 0·5443746 −13·064990	0 0	+ 2·5033128 +60·079507
2SM	− 0·9337586 −22·410206	− 1·4874170 −35·698008	− 2·0317916 −48·762998	− 2·5761662 −61·827989	− 3·1205410 −74·892984	− 0·9748272 −23·395853	− 1·0158958 −24·381499	− 1·0569644 −25·367146	− 1·5602704 −37·446490	− 3·0476874 −73·144498	− 2·5033128 −60·079507	0 0

In this table *a*, *b* denote the hourly speeds of the components *A*, *B*.

TABLE 40.—*Synodic periods in days and hours.*

DIURNALS.

A	B									
	J_1	K_1	M_1	O_1	OO	P_1	Q_1	2 Q	S_1	ρ_1
J_1	∞ ∞									
K_1	27·55455 661·3092	∞ ∞								
M_1	13·71879 329·2509	27·32158 655·7180	∞ ∞							
O_1	9·13293 219·1904	13·66079 327·8590	27·32158 655·7180	∞ ∞						
OO	27·09252 650·2205	13·66079 327·8590	9·10719 218·5727	6·83040 163·9295	∞ ∞					
P_1	23·94208 574·6100	182·62127 4382·9105	32·12822 771·0772	14·76529 354·3671	12·71003 305·0407	∞ ∞				
Q_1	6·85939 164·6254	9·13293 219·1904	13·71879 329·2509	27·55455 661·3092	5·47357 131·3657	9·61372 230·7292	∞ ∞			
2 Q	5·49218 131·8123	6·85939 164·6254	9·15882 219·8116	13·77728 330·6546	4·56647 109·5952	7·12709 171·0502	27·55455 661·3092	∞ ∞		
S_1	25·62161 614·9186	365·24255 8765·8211	29·53059 708·7341	14·19158 340·5980	13·16827 316·0385	365·24255 8765·8211	9·36716 224·8118	6·99068 167·7763	∞ ∞	
ρ_1	7·09579 170·2990	9·55685 229·3645	14·69813 352·7552	31·81193 763·4863	5·62306 134·9534	10·08460 242·0304	205·89265 4941·4235	24·30219 583·2527	9·81364 235·5272	∞ ∞

SEMIDIURNALS.

A	B											
	K_2	L_2	M_2	N_2	2 N	R_2	S_2	T_2	λ_2	μ_2	ν_2	2 SM
K_2	∞ ∞											
L_2	27·09252 650·2204	∞ ∞										
M_2	13·66079 327·8590	27·55456 661·3094	∞ ∞									
N_2	9·13293 219·1904	13·77728 330·6547	27·55456 661·3094	∞ ∞								
2 N	6·85939 164·6254	9·18485 220·4364	13·77728 330·6546	27·55455 661·3092	∞ ∞							
R_2	365·24255 8765·8211	29·26317 702·3160	14·19158 340·5980	9·36716 224·8118	6·99068 167·7763	∞ ∞						
S_2	182·62127 4382·9105	31·81193 763·4863	14·76529 354·3671	9·61372 230·7292	7·12709 171·0502	365·24255 8765·8211	∞ ∞					
T_2	121·74751 2921·9403	34·84704 836·3290	15·38734 369·2962	9·87361 236·9665	7·26893 174·4544	182·62127 4382·9105	365·24255 8765·8211	∞ ∞				
λ_2	23·94208 574·6100	205·89265 4941·4235	31·81193 763·4863	14·76529 354·3671	9·61372 230·7292	25·62161 614·9186	27·55456 661·3094	29·80294 715·2706	∞ ∞			
μ_2	7·09579 170·2990	9·61372 230·7292	14·76529 354·3671	31·81193 763·4863	205·89236 4941·4165	7·23638 173·6731	7·38265 177·1835	7·53495 180·8388	10·08460 242·0304	∞ ∞		
ν_2	9·55685 229·3645	14·76529 354·3671	31·81193 763·4863	205·89265 4941·4235	24·30216 583·2526	9·81364 235·5272	10·08460 242·0304	10·37095 248·9027	15·90597 381·7432	27·55456 661·3094	∞ ∞	
2 SM	16·06411 385·5386	10·08460 242·0304	7·38265 177·1835	5·82261 139·7425	4·80686 115·3646	15·38734 369·2962	14·76529 354·3671	14·19158 340·5980	9·61372 230·7292	4·92176 118·1224	5·99206 143·8094	∞ ∞

Synodic period = $\frac{15}{b \sim a}$ days or $\frac{360}{b \sim a}$ hours.

TABLE 41.—*For clearing one component of the effects of others.*

[Length of series, 29 days.]

Component sought. (A)	Disturbing components (B, C, etc.).									
	J_1	K_1	M_1	O_1	OO	P_1	Q_1	2 Q	S_1	ρ_1
J_1		·0497 351 π	·053 339	·0525 328 π	·065 13 π	·162 322 π	·049 319	·046 310 π	·113 336 π	·021 344
K_1	·050 9 π		·057 349 π	·0565 338	·056 22	·959 331	·052 328 π	·049 319	·990 346	·011 354 π
M_1	·053 21	·0575 11 π		·0575 349 π	·055 33 π	·106 162	·053 339	·050 330 π	·018 177	·014 185 π
O_1	·052 32 π	·0565 22	·057 11 π		·052 44	·018 174 π	·050 351 π	·049 341	·021 8	·096 196
OO	·065 347 π	·0565 338	·055 327 π	·0523 316		·108 309	·048 306 π	·045 297	·086 324	·029 332 π
P_1	·162 38 π	·9590 29	·106 198	·0182 186 π	·108 51		·005 357 π	·017 348	·990 14	·042 202.
Q_1	·049 41	·0525 32 π	·053 21	·0497 9 π	·048 54 π	·005 3 π		·050 351	·031 17 π	·968 25
2 Q	·046 50 π	·0494 41	·050 30 π	·0489 19	·045 63	·017 12	·050 9 π		·034 27	·152 35 π
S_1	·113 24 π	·9902 14	·018 183	·0212 352	·086 36	·990 346	·031 343 π	·034 333		·015 188
ρ_1	·021 16	·0113 6 π	·014 175 π	·0958 164	·029 28 π	·042 158	·968 335	·152 325 π	·015 172	

Component sought. (A)	Disturbing components (B, C, etc.).											
	K_2	L_2	M_2	N_2	2 N	R_2	S_2	T_2	λ_2	μ_2	ν_2	2 SM
K_2		·065 347 π	·0565 338	·052 328 π	·049 319	·990 346	·9590 331	·909 317	·162 322 π	·021 344	·011 354 π	·101 145 π
L_2	·065 13 π		·0497 351 π	·049 341	·048 332 π	·009 178	·0958 164	·192 150	·968 335	·005 357 π	·018 186 π	·042 158
M_2	·056 22	·050 9 π		·050 351 π	·049 341	·021 8	·0182 174 π	·060 159	·096 164	·018 186 π	·096 196	·018 67 π
N_2	·052 32 π	·049 19	·0497 9 π		·050 351 π	·031 17 π	·0055 3 π	·021 169	·018 174 π	·096 196	·968 25	·004 177
2 N	·049 41	·048 28 π	·0489 19	·050 9 π		·034 27	·0168 12	·003 178 π	·005 3 π	·968 25	·152 35 π	·005 6
R_2	·990 14	·009 182	·0212 352	·031 343 π	·034 333		·9902 346	·959 331	·113 336 π	·002 359	·015 188	·060 159 π
S_2	·959 29	·096 196	·0182 186 π	·005 357 π	·017 348	·990 14		·990 346	·050 351 π	·018 293 π	·042 202	·018 174 π
T_2	·909 43	·192 210	·0599 201 π	·021 191	·003 182 π	·959 29	·9902 14		·028 185	·038 207 π	·068 217	·021 8
λ_2	·162 38 π	·968 25	·0958 196	·018 186 π	·005 357 π	·113 24 π	·0497 9 π	·028 175		·042 202	·092 212 π	·005 3 π
μ_2	·021 16	·005 3 π	·0182 174 π	·096 164	·968 335	·002 1	·0181 67 π	·038 153 π	·042 158		·050 9 π	·018 161 π
ν_2	·011 6 π	·018 174 π	·0958 164	·968 335	·152 325 π	·015 172	·0422 158	·068 143	·092 148 π	·050 351 π		·032 151
2 SM	·101 215 π	·042 202	·0181 293 π	·004 183	·005 354	·060 201 π	·0182 186 π	·021 352	·005 357 π	·018 199 π	·032 209	

TABLE 41—*For clearing one component of the effects of others*—Continued.

[Length of series, 369 days.]

Component sought. (A)	Disturbing components (B, C, etc.).									
	J_1	K_1	M_1	O_1	OO	P_1	Q_1	2Q	S_1	ρ_1
J_1		·0224 290 π	·004 198	·0075 287	·022 112 π	·020 286 π	·004 217 π	·003 326 π	·021 288	·000 180 π
K_1	·022 70 π		·024 269 π	·0004 358 π	·000 2 π	·010 356	·007 287	·004 217 π	·010 358 π	·008 250
M_1	·004 162 π	·0236 91 π		·0236 269 π	·008 93	·028 87 π	·004 198	·006 308	·025 89	·004 341 π
O_1	·008 73 π	·0004 2 π	·024 91 π		·000 4	·000 178	·022 290 π	·007 219	·000 180 π	·026 252 π
OO	·022 248 π	·0004 358 π	·008 267	·0004 356		·001 354 π	·005 285 π	·002 215	·001 356	·004 248 π
P_1	·020 74 π	·0102 4 π	·028 273 π	·0004 182	·001 6 π		·008 291	·004 221 π	·010 2 π	·008 254
Q_1	·004 143 π	·0075 73	·004 162	·0224 70 π	·005 75 π	·008 69		·022 290 π	·008 71 π	·108 143 π
2Q	·003 34 π	·0036 143 π	·006 52	·0075 141	·002 145	·004 139 π	·022 70 π		·004 141	·011 33 π
S_1	·021 72	·0102 2 π	·025 271	·0000 180 π	·001 4	·010 358 π	·008 289 π	·004 219		·008 252 π
ρ_1	·000 180 π	·0078 110	·004 19 π	·0261 108 π	·004 112 π	·008 106	·108 217 π	·011 327 π	·008 108 π	

Component sought. (A)	Disturbing components (B, C, etc.).											
	K_2	L_2	M_2	N_2	2N	R_2	S_2	T_2	λ_2	μ_2	ν_2	2SM
K_2		·022 248 π	·0000 358 π	·008 287	·004 217 π	·010 358 π	·0102 356	·010 354 π	·020 286 π	·000 180 π	·008 250	·001 175
L_2	·022 112 π		·0224 290 π	·007 219	·004 329	·024 110	·0261 108 π	·029 106	·108 217 π	·008 291	·000 182	·008 106
M_2	·000 2 π	·022 70 π		·022 290 π	·007 219	·000 180 π	·0004 178	·001 177 π	·026 108 π	·000 182	·026 252 π	·000 177 π
N_2	·008 73	·007 141	·0224 70 π		·022 290 π	·008 71 π	·0077 69	·008 67 π	·000 178	·026 252 π	·108 143 π	·005 67 π
2N	·004 143 π	·004 31	·0075 141	·022 70 π		·004 141	·0040 139 π	·004 138	·008 69	·108 143 π	·011 33 π	·003 138
R_2	·010 2 π	·024 250	·0000 180 π	·008 289 π	·004 219		·0102 358 π	·010 356	·021 288	·000 181	·008 252 π	·001 177 π
S_2	·010 4	·026 252 π	·0004 182	·008 291	·004 221 π	·010 2 π		·010 358 π	·022 290 π	·000 183 π	·008 254	·000 178
T_2	·010 6 π	·029 254	·0008 183 π	·008 293 π	·004 222	·010 4	·0102 2 π		·024 291	·001 185	·009 256 π	·000 180 π
λ_2	·020 74 π	·108 143 π	·0261 252 π	·000 182	·008 291	·021 72	·0224 70 π	·024 69		·008 254	·008 324 π	·008 69
μ_2	·000 180 π	·008 69	·0004 178	·026 108 π	·108 217 π	·000 179	·0004 177 π	·001 175	·008 106		·022 70 π	·000 175
ν_2	·008 110	·000 178	·0261 108 π	·108 217 π	·011 327 π	·008 108 π	·0084 106	·009 104 π	·008 36 π	·022 290 π		·005 105 π
2SM	·001 185	·008 254	·0004 183 π	·005 293 π	·003 222	·001 183 π	·0004 182	·000 180 π	·008 291	·000 185	·005 255 π	

TABLE 42.—*Component hours derived from solar hours.*

Day of series.	J	K	L	M	N	2N	O	OO	P
1	13+1 ←	.....	.....	15−1 ↑	10−1 ↑	8−1 ← 22−2 ←	8−1 ← 22−2 ←	7+1 ← 20+2 ←	.....
2	15+2 ↑	.....	8−1 ↑	21−2 ←	5−2 ↑	12−3 ↑	12−3 ←	9+3 ← 23+4 ↑	.....
3	17+3 ↑	.....	.....	.....	1−3 ← 20−4 ←	2−4 ↑ 17−5 ←	2−4 ↑ 16−5 ↑	12+5 ↑	.....
4	18+4 ←	.....	.....	2−3 ↑	15−5 ↑	7−6 ← 21−7 ↑	7−6 ← 21−7 ←	1+6 ↑ 14+7 ←	.....
5	20+5 ↑	.....	0−2 ←	8−4 ←	10−6 ↑	11−8 ↑	11−8 ←	3+8 ← 16+9 ←	.....
6	21+6 ←	.....	.....	13−5 ↑	5−7 ↑	2−9 ← 16−10←	1−9 ↑ 15−10↑	6+10↑ 19+11↑	.....
7	23+7 ←	.....	16−3 ←	19−6 ←	1−8 ← 20−9 ←	6−11↑ 20−12↑	6−11← 20−12←	8+12↑ 21−11←	.....
8	.....	15+1 ←	.....	.....	15−10↑	11+11←	10+11←	10−10← 23−9 ←	15−1 ↑
9	1+8 ↑	.....	.....	0−7 ↑	10−11↑	1+10← 15+9 ↑	0+10↑ 14+9 ↑	13−8 ↑	.....
10	2+9 ←	.....	7−4 ↑	6−8 ←	6−12←	5+8 ↑ 20+7 ←	4+8 ↑ 19+7 ←	2−7 ↑ 15−6 ↑	.....
11	4+10↑	.....	.....	12−9 ←	1+11← 20+10↑	10+6 ←	9+6 ← 23+5 ↑	4−5 ← 17−4 ←	.....
12	6+11↑	.....	23−5 ←	17−10↑	15+9 ↑	0+5 ↑ 14+4 ↑	13+4 ↑	6−3 ← 20−2 ↑	.....
13	7+12←	.....	.....	23−11←	11+8 ←	5+3 ← 19+2 ←	3+3 ↑ 18+2 ←	9−1 ↑ 22−0 ↑	.....
14	9−11↑	.....	.....	.....	6+7 ←	9+1 ↑ 23+0 ↑	8+1 ← 22+0 ↑	11+1 ←	.....
15	10−10←	.....	14−6 ↑	4−12↑	1+6 ← 20+5 ↑	14−1 ←	12−1 ↑	0+2 ← 13+3 ←	.....
16	12−9 ←	.....	.....	10+11←	15+4 ↑	4−2 ← 18−3 ↑	2−2 ↑ 17−3 ←	3+4 ↑ 16+5 ↑	.....
17	14−8 ↑	.....	.....	15+10↑	11+3 ←	8−4 ↑ 23−5 ←	7−4 ← 21−5 ←	5+6 ↑ 18+7 ←	.....
18	15−7 ←	.....	6−7 ↑	*21+9 ←	6+2 ←	13−6 ←	11−6 ↑	7+8 ← 20+9 ←	.....
19	17−6 ↑	.....	.....	.....	1+1 ↑ 20+0 ↑	3−7 ↑ 18−8 ←	1−7 ↑ 16−8 ←	10+10↑ 23+11↑	.....
20	18−5 ←	.....	22−8 ←	2+8 ↑	16−1 ←	8−9 ← 22−10↑	6−9 ← 20−10←	12+12↑	.....
21	20−4 ←	.....	.....	8+7 ←	11−2 ←	12−11↑	10−11↑	1−11← 14−10←	.....
22	22−3 ↑	.....	.....	13+6 ↑	6−3 ↑	3−12← 17+11←	0−12↑ 14+11↑	3−9 ← 17−8 ↑	.....
23	23−2 ←	20+2 ←	13−9 ↑	19+5 ←	1−4 ↑ 20−5 ↑	7+10↑ 21+9 ↑	5+10← 19+9 ←	6−7 ↑ 19−6 ↑	20−2 ↑
24	.....	.....	.....	.....	16−6 ←	12+8 ←	9+8 ↑ 23+7 ↑	8−5 ← 21−4 ←	.....
25	1−1 ↑	.....	.....	0+4 ↑	11−7 ←	2+7 ← 16+6 ↑	13+6 ↑	10−3 ←	.....
26	3−0 ↑	.....	5−10←	6+3 ←	6−8 ↑	6+5 ↑ 21+4 ←	4+5 ← 18+4 ←	0−2 ↑ 13−1 ↑	.....
27	4+1 ←	.....	.....	11+2 ↑	1−9 ↑ 21−10←	11+3 ←	8+3 ↑ 22+2 ↑	2−0 ↑ 15+1 ←	.....
28	6+2 ↑	.....	21−11←	17+1 ←	16−11←	1+2 ↑ 15+1 ↑	12+1 ↑	4+2 ← 17+3 ←	.....
29	7+3 ←	.....	.....	22+0 ↑	11−12↑	6+0 ← 20−1 ←	3+0 ← 17−1 ←	7+4 ↑ 20+5 ↑	.....
30	9+4 ←	.....	.....	.....	6+11↑	10−2 ↑	7−2 ← 21−3 ↑	9+6 ← 22+7 ←	.....
31	11+5 ↑	.....	12−12↑	4−1 ←	2+10← 21+9 ←	0−3 ↑ 15−4 ←	11−4 ↑	11+8 ←	.....
32	12+6 ↑	.....	.....	10−2 ←	16+8 ←	5−5 ← 19−6 ↑	2−5 ← 16−6 ←	1+9 ↑ 14+10↑	.....
33	14+7 ↑	.....	.....	15−3 ↑	11+7 ↑	9−7 ↑	6−7 ← 20−8 ↑	3+11↑ 16+12←	.....
34	16+8 ↑	.....	4+11←	21−4 ←	6+6 ↑	0−8 ← 14−9 ←	10−9 ↑	5−11← 18−10←	.....
35	17+9 ←	.....	.....	.....	2+5 ← 21+4 ←	4−10↑ 18−11↑	1−10← 15−11←	8−9 ↑ 21−8 ↑	.....
36	19+10↑	.....	19+10↑	2−5 ↑	16+3 ↑	9−12← 23+11←	5−12← 19+11↑	10−7 ↑ 23−6 ←	.....
37	20+11←	.....	.....	8−6 ←	11+2 ↑	13+10↑	9+10↑ 23+9 ↑	12−5 ←	.....
38	22+12←	.....	.....	13−7 ↑	7+1 ←	3+9 ↑ 18+8 ←	14+8 ←	1−4 ← 15−3 ↑	.....
39	.....	2+3 ↑	11+9 ↑	19−8 ←	2+0 ← 21−1 ↑	8+7 ← 22+6 ↑	4+7 ← 18+6 ↑	4−2 ↑ 17−1 ↑	2−3 ←
40	0−11↑	.....	.....	.....	16−2 ↑	12+5 ↑	8+5 ↑ 22+4 ↑	6−0 ← 19+1 ←	.....
41	1−10←	.....	.....	0−9 ↑	11−3 ↑	3+4 ← 17+3 ←	13+3 ←	8+2 ← 22+3 ↑	.....
42	3−9 ↑	.....	3+8 ←	6−10←	7−4 ←	7+2 ↑ 21+1 ↑	3+2 ← 17+1 ↑	11+4 ↑	.....
43	5−8 ↑	.....	.....	11−11↑	2−5 ← 21−6 ↑	12+0 ←	7+0 ↑ 21−1 ↑	0+5 ↑ 13+6 ←	.....
44	6−7 ←	.....	18+7 ↑	17−12←	16−7 ↑	2−1 ← 16−2 ↑	12−2 ←	2+7 ← 15+8 ←	.....
45	8−6 ↑	.....	.....	22+11↑	12−8 ←	6−3 ↑ 21−4 ←	2−3 ← 16−4 ←	5+9 ↑ 18+10↑	.....
46	9−5 ←	.....	.....	.....	7−9 ←	11−5 ←	6−5 ↑ 20−6 ↑	7+11↑ 20+12←	.....
47	11−4 ←	.....	10+6 ←	4+10←	2−10↑ 21−11↑	1−6 ↑ 15−7 ↑	11−7 ←	9−11← 22−10←	.....
48	13−3 ↑	.....	.....	9+9 ↑	17−12←	6−8 ← 20−9 ←	1−8 ← 15−9 ←	12−9 ↑	.....
49	14−2 ←	.....	.....	15+8 ←	12+11←	10−10↑	5−10↑ 19−11↑	1−8 ↑ 14−7 ↑	.....
50	16−1 ↑	.....	2+5 ←	20+7 ↑	7+10←	0−11↑ 15−12←	9−12↑	3−6 ← 16−5 ←	.....
51	18−0 ↑	.....	.....	.....	2+9 ↑ 21+8 ↑	5+11← 19+10↑	0+11← 14+10←	5−4 ← 19−3 ↑	.....
52	19+1 ←	.....	17+4 ↑	2+6 ↑	17+7 ←	9+9 ↑	4+9 ↑ 18+8 ↑	8−2 ↑ 21−1 ↑	.....
53	21+2 ↑	.....	.....	8+5 ←	12+6 ←	0+8 ← 14+7 ←	8+7 ↑ 23+6 ←	10−0 ← 23+1 ←	.....
54	22+3 ←	7+4 ↑	....	13+4 ↑	7+5 ←	4+6 ↑ 19+5 ←	13+5 ←	12+2 ←	7−4 ←
55	.....	.....	9+3 ←	19+3 ←	2+4 ↑ 22+3 ←	9+4 ← 23+3 ↑	3+4 ↑ 17+3 ↑	2+3 ↑ 15+4 ↑	.....
56	0+4 ←	.....	.....	.....	17+2 ←	13+2 ↑	7+2 ↑ 22+1 ←	4+5 ↑ 17+6 ←	.....
57	2+5 ↑	.....	.....	0+2 ↑	12+1 ↑	4+1 ← 18+0 ←	12+0 ←	6+7 ← 19+8 ←	.....
58	3+6 ←	.....	0+2 ↑	6+1 ←	7+0 ↑	8−1 ↑ 22−2 ↑	2−1 ← 16−2 ↑	9+9 ↑ 22+10↑	.....
59	5+7 ↑	.....	.....	11+0 ↑	2−1 ↑ 22−2 ←	13−3 ←	6−3 ↑ 21−4 ←	11+11↑	.....
60	6+8 ←	.....	16+1 ↑	17−1 ←	17−3 ←	3−4 ← 17−5 ↑	11−5 ←	0+12← 13−11←	.....
61	8+9 ←	.....	.....	22−2 ↑	12−4 ↑	7−6 ↑ 22−7 ←	1−6 ← 15−7 ↑	2−10← 16−9 ↑	.....
62	10+10↑	.....	.....	.....	7−5 ↑	12−8 ←	5−8 ↑ 20−9 ←	5−8 ↑ 18−7 ↑	.....
63	11+11←	.....	8+0 ←	4−3 ←	3−6 ← 22−7 ←	2−9 ↑ 16−10↑	10−10←	7−6 ← 20−5 ←	.....
64	13+12↑	.....	.....	9−4 ↑	17−8 ↑	7−11← 21−12←	0−11← 14−12↑	9−4 ← 23−3 ↑	.....
65	15−11↑	.....	23−1 ↑	15−5 ←	12−9 ↑	11+11↑	4+11↑ 18+10↑	12−2 ↑	.....
66	16−10←	.....	.....	20−6 ↑	8−10←	1+10↑ 16+9 ←	9+9 ← 23+8 ←	1−1 ↑ 14−0 ←	.....
67	18−9 ↑	.....	.....	.....	3−11← 22−12←	6+8 ← 20+7 ↑	13+7 ↑	3+1 ← 16+2 ←	.....
68	19−8 ←	.....	15−2 ←	2−7 ←	17+11↑	10+6 ↑	3+6 ↑ 17+5 ↑	6+3 ↑ 19+4 ↑	.....
69	21−7 ←	12+5 ←	.....	7−8 ↑	12+10↑	1+5 ← 15+4 ←	8+4 ← 22+3 ←	8+5 ↑ 21+6 ←	12−5 ↑
70	23−6 ↑	.....	.....	13−9 ←	8+9 ←	5+3 ↑ 19+2 ↑	12+2 ↑	10+7 ← 23+8 ←	.....
71	.....	.....	7−3 ←	19−10←	3+8 ← 22+7 ↑	10+1 ←	2+1 ↑ 16+0 ↑	13+9 ↑	.....
72	0−5 ←	.....	.....	.....	17+6 ↑	0+0 ← 14−1 ↑	7−1 ← 21−2 ←	2+10↑ 15+11↑	.....
73	2−4 ↑	.....	22−4 ↑	0−11↑	13+5 ←	4−2 ↑ 19−3 ←	11−3 ←	4+12← 17−11←	.....
74	4−3 ↑	.....	.....	6−12←	8+4 ←	9−4 ← 23−5 ↑	1−4 ↑ 15−5 ↑	6−10← 20−9 ↑	.....
75	5−2 ←	.....	.....	11+11↑	3+3 ↑ 22+2 ↑	13−6 ↑	6−6 ← 20−7 ←	9−8 ↑ 22−7 ↑	.....
76	7−1 ↑	.....	14−5 ←	17+10←	17+1 ↑	4−7 ← 18−8 ←	10−8 ←	11−6 ←	.....
77	8−0 ←	.....	.....	22+9 ↑	13+0 ←	8−9 ↑ 22−10↑	0−9 ↑ 14−10↑	0−5 ← 13−4 ←	.....
78	10+1 ←	.....	.....	.....	8−1 ←	13−11←	5−11← 19−12←	3−3 ↑ 16−2 ↑	.....
79	12+2 ↑	.....	5−6 ↑	4+8 ←	3−2 ↑ 22−3 ↑	3−12← 17+11↑	9+11← 23+10↑	5−1 ↑ 18−0 ←	.....
80	13+3 ←	.....	.....	9+7 ↑	18−4 ←	7+10↑ 22+9 ←	13+9 ↑	7+1 ← 20+2 ←	.....

TABLE 42.—*Component hours derived from solar hours*—Continued.

Day of series.	J	K	L	M	N	2N	O	OO	P
81	15+4 ↑	.....	21−7 ↑	15+6 ←	13−5 ←	12+8 ←	3+8 ↑ 18+7 ←	10+3 ↑ 23+4 ↑	.....
82	17+5 ↑	.....	.....	20+5 ↑	8−6 ↑	2+7 ↑ 16+6 ↑	8+6 ← 22+5 ↑	12+5 ↑	.....
83	18+6 ←	.....	.....	.....	3−7 ↑ 23−8 ←	7+5 ← 21+4 ←	12+4 ↑	1+6 ← 14+7 ←	.....
84	20+7 ↑	17+6 ←	13−8 ←	2+4 ←	18−9 ←	11+3 ↑	2+3 ↑ 17+2 ←	3+8 ← 17+9 ↑	17−6 ↑
85	21+8 ←	.....	.....	7+3 ↑	13−10←	1+2 ↑ 16+1 ←	7+1 ← 21+0 ←	6+10↑ 19+11↑	.....
86	23+9 ←	.....	.....	13+2 ←	8−11↑	6+0 ← 20−1 ↑	11−1 ↑	8+12← 21−11←	.....
87	.....	.....	4−9 ↑	18+1 ↑	3−12↑ 23+11←	10−2 ↑	1−2 ↑ 16−3 ←	11−10↑	.....
88	1+10↑	.....	.....	.....	18+10←	1−3 ← 15−4 ←	6−4 ← 20−5 ←	0−9 ↑ 13−8 ↑	.....
89	2+11←	.....	20−10←	0+0 ←	13+9 ↑	5−5 ↑ 20−6 ←	10−6 ↑	2−7 ← 15−6 ←	.....
90	4+12↑	.....	.....	5−1 ↑	8+8 ↑	10−7 ←	0−7 ↑ 15−8 ←	4−5 ← 18−4 ↑	.....
91	6−11↑	.....	.....	11−2 ←	4+7 ← 23+6 ←	0−8 ↑ 14−9 ↑	5−9 ← 19−10←	7−3 ↑ 20−2 ↑	.....
92	7−10←	.....	12−11←	17−3 ←	18+5 ↑	5−10← 19−11←	9−11↑ 23−12↑	9−1 ← 22−0 ←	.....
93	9−9 ↑	.....	.....	22−4 ↑	13+4 ↑	9−12↑ 23+11↑	13+11↑	11+1 ←	.....
94	10−8 ←	.....	.....	.....	8+3 ↑	14+10←	4+10← 18+9 ←	1+2 ↑ 14+3 ↑	.....
95	12−7 ←	.....	3−12↑	4−5 ←	4+2 ← 23+1 ←	4+9 ← 18+8 ↑	8+8 ↑ 22+7 ↑	3+4 ↑ 16+5 ←	.....
96	14−6 ↑	.....	.....	9−6 ↑	18+0 ↑	8+7 ↑ 23+6 ←	12+6 ↑	5+6 ← 18+7 ←	.....
97	15−5 ←	.....	19+11←	15−7 ←	13−1 ↑	13+5 ←	3+5 ← 17+4 ←	8+8 ↑ 21+9 ↑	.....
98	17−4 ↑	.....	.....	20−8 ↑	9−2 ←	3+4 ↑ 17+3 ↑	7+3 ↑ 21+2 ↑	10+10↑ 23+11←	.....
99	18−3 ←	23+7 ↑	.....	.....	4−3 ← 23−4 ↑	8+2 ← 22+1 ←	11+1 ↑	12+12←	23−7 ←
100	20−2 ←	.....	10+10↑	2−9 ←	18−5 ↑	12+0 ↑	2+0 ← 16−1 ←	1−11← 15−10↑	.....
101	22−1 ↑	.....	.....	7−10↑	14−6 ←	2−1 ↑ 17−2 ←	6−2 ← 20−3 ↑	4−9 ↑ 17−8 ↑	.....
102	23−0 ←	.....	.....	13−11←	9−7 ←	7−3 ← 21−4 ↑	10−4 ↑	6−7 ← 19−6 ←	.....
103	.....	.....	2+9 ↑	18−12↑	4−8 ← 23−9 ↑	11−5 ↑	1−5 ← 15−6 ←	8−5 ← 22−4 ↑	.....
104	1+1 ↑	.....	.....	.....	18−10↑	2−6 ← 16−7 ←	5−7 ← 19−8 ↑	11−3 ↑	.....
105	3+2 ↑	.....	18+8 ←	0+11←	14−11←	6−8 ↑ 20−9 ↑	9−9 ↑	0−2 ↑ 13−1 ←	.....
106	4+3 ←	.....	.....	5+10↑	9−12←	11−10←	0−10← 14−11←	2−0 ← 15+1 ←	.....
107	6+4 ↑	.....	.....	11+9 ←	4+11↑ 23+10↑	1−11← 15−12↑	4−12← 18+11↑	5+2 ↑ 18+3 ↑	.....
108	7+5 ←	.....	9+7 ↑	16+8 ↑	19+9 ←	5+11↑ 20+10←	8+10↑ 22+9 ↑	7+4 ↑ 20+5 ←	.....
109	9+6 ←	.....	.....	22+7 ←	14+8 ←	10+9 ←	13+8 ←	9+6 ← 22+7 ←	.....
110	11+7 ↑	.....	.....	.....	9+7 ↑	0+8 ↑ 14+7 ↑	3+7 ← 17+6 ↑	12+8 ↑	.....
111	12+8 ←	.....	1+6 ←	3+6 ↑	4+6 ↑ 23+5 ↑	5+6 ← 19+5 ←	7+5 ↑ 21+4 ↑	1+9 ↑ 14+10↑	.....
112	14+9 ↑	.....	.....	9+5 ↑	19+4 ←	9+4 ↑ 23+3 ↑	12+3 ←	3+11← 16+12←	.....
113	16+10↑	.....	17+5 ←	15+4 ←	14+3 ←	14+2 ←	2+2 ← 16+1 ←	5−11← 19−10↑	.....
114	17+11←	.....	.....	20+3 ↑	9+2 ↑	4+1 ← 18+0 ↑	6+0 ↑ 20−1 ↑	8−9 ↑ 21−8 ↑	.....
115	19+12↑	4+8 ↑	.....	.....	4+1 ↑	8−1 ↑ 23−2 ←	11−2 ←	10−7 ← 23−6 ←	4−8 ←
116	20−11←	.....	8+4 ↑	2+2 ←	0+0 ← 19−1 ←	13−3 ←	1−3 ← 15−4 ←	12−5 ←	.....
117	22−10←	.....	.....	7+1 ↑	14−2 ↑	3−4 ↑ 17−5 ↑	5−5 ↑ 19−6 ↑	2−4 ↑ 15−3 ↑	.....
118	.....	.....	.....	13+0 ←	9−3 ↑	8−6 ← 22−7 ←	10−7 ←	4−2 ↑ 17−1 ←	.....
119	0−9 ↑	.....	0+3 ←	18−1 ↑	5−4 ←	12−8 ↑	0−8 ← 14−9 ←	6−0 ← 19+1 ←	.....
120	1−8 ←	.....	.....	.....	0−5 ← 19−6 ↑	2−9 ↑ 17−10←	4−10↑ 18−11↑	9+2 ↑ 22+3 ↑	.....
121	3−7 ↑	.....	15+2 ↑	0−2 ←	14−7 ↑	7−11← 21−12↑	8−12↑ 23+11←	11+4 ↑	.....
122	5−6 ↑	.....	.....	5−3 ↑	9−8 ↑	11+11↑	13+10←	0+5 ← 13+6 ←	.....
123	6−5 ←	.....	.....	11−4 ←	5−9 ←	2+10← 16+9 ←	3+9 ↑ 17+8 ↑	2+7 ← 16+8 ↑	.....
124	8−4 ↑	.....	7+1 ↑	16−5 ↑	0−10← 19−11↑	6+8 ↑ 20+7 ↑	7+7 ↑ 22+6 ←	5+9 ↑ 18+10↑	.....
125	9−3 ←	.....	.....	22−6 ←	14−12↑	11+6 ←	12+5 ←	7+11← 20+12←	.....
126	11−2 ←	.....	23+0 ←	.....	10+11←	1+5 ↑ 15+4 ↑	2+4 ↑ 16+3 ↑	9−11← 23−10↑	.....
127	13−1 ↑	.....	.....	3−7 ↑	5+10←	6+3 ← 20+2 ←	6+2 ↑ 21+1 ←	12−9 ↑	.....
128	14−0 ←	.....	.....	9−8 ←	0+9 ↑ 19+8 ↑	10+1 ↑	11+0 ←	1−8 ↑ 14−7 ←	.....
129	16+1 ↑	.....	14−1 ↑	14−9 ↑	15+7 ←	0+0 ↑ 15−1 ←	1−1 ← 15−2 ↑	3−6 ← 16−5 ←	.....
130	18+2 ↑	9+9 ←	.....	20−10←	10+6 ←	5−2 ← 19−3 ↑	5−3 ↑ 20−4 ←	6−4 ↑ 19−3 ↑	9−9 ↑
131	19+3 ←	.....	.....	.....	5+5 ←	9−4 ↑	10−5 ←	8−2 ↑ 21−1 ←	.....
132	21+4 ↑	.....	6−2 ←	2−11←	0+4 ↑ 19+3 ↑	0−5 ← 14−6 ←	0−6 ← 14−7 ↑	10−0 ← 23+1 ←	.....
133	22+5 ←	.....	.....	7−12↑	15+2 ←	4−7 ↑ 18−8 ↑	4−8 ↑ 19−9 ←	13+2 ↑	.....
134	.....	.....	22−3 ←	13+11←	10+1 ←	9−9 ← 23−10←	9−10← 23−11←	2+3 ↑ 15+4 ↑	.....
135	0+6 ←	.....	.....	18+10↑	5+0 ↑	13−11↑	13−12↑	4+5 ← 17+6 ←	.....
136	2+7 ↑	.....	.....	.....	0−1 ← 20−2 ←	3−12↑ 18+11←	3+11↑ 17+10↑	6+7 ← 20+8 ↑	.....
137	3+8 ←	.....	13−4 ↑	0+9 ←	15−3 ←	8+10← 22+9 ↑	8+9 ← 22+8 ←	9+9 ↑ 22+10↑	.....
138	5+9 ↑	.....	.....	5+8 ↑	10−4 ↑	12+8 ↑	12+7 ↑	11+11←	.....
139	6+10←	.....	.....	11+7 ←	5−5 ↑	3+7 ← 17+6 ←	2+6 ↑ 16+5 ↑	0+12← 13−11←	.....
140	8+11←	.....	5−5 ←	16+6 ↑	0−6 ↑ 20−7 ←	7+5 ↑ 21+4 ↑	7+4 ← 21+3 ←	3−10↑ 16−9 ↑	.....
141	10+12↑	.....	.....	22+5 ←	15−8 ←	12+3 ←	11+2 ↑	5−8 ↑ 18−7 ←	.....
142	11−11←	.....	20−6 ↑	.....	10−9 ↑	2+2 ← 16+1 ↑	1+1 ↑ 15+0 ↑	7−6 ← 20−5 ←	.....
143	13−10↑	.....	.....	3+4 ↑	5−10↑	6+0 ↑ 21−1 ←	6−1 ← 20−2 ←	10−4 ↑ 23−3 ↑	.....
144	15−9 ↑	.....	.....	9+3 ←	1−11← 20−12←	11−2 ←	10−3 ←	12−2 ←	.....
145	16−8 ←	14+10←	12−7 ↑	14+2 ↑	15+11↑	1−3 ↑ 15−4 ↑	0−4 ↑ 14−5 ↑	1−1 ← 14−0 ←	14−10↑
146	18−7 ↑	.....	.....	20+1 ←	10+10↑	6−5 ← 20−6 ←	5−6 ← 19−7 ←	4+1 ↑ 17+2 ↑	.....
147	19−6 ←	.....	.....	.....	6+9 ←	10−7 ↑	9−8 ← 23−9 ↑	6+3 ↑ 19+4 ←	.....
148	21−5 ←	.....	4−8 ←	1+0 ↑	1+8 ← 20+7 ←	0−8 ↑ 15−9 ←	13−10↑	8+5 ← 21+6 ←	.....
149	23−4 ↑	.....	.....	7−1 ←	15+6 ↑	5−10← 19−11↑	3−11↑ 18−12←	11+7 ↑	.....
150	.....	.....	19−9 ↑	12−2 ↑	10+5 ↑	9−12↑	8+11← 22+10↑	0+8 ↑ 13+9 ↑	.....
151	0−3 ←	.....	.....	18−3 ←	6+4 ←	0+11← 14+10←	12+9 ↑	2+10← 15+11←	.....
152	2−2 ↑	.....	.....	.....	1+3 ← 20+2 ↑	4+9 ↑ 18+8 ↑	2+8 ↑ 17+7 ←	4+12← 18−11↑	.....
153	4−1 ↑	.....	11−10←	0−4 ←	15+1 ↑	9+7 ← 23+6 ←	7+6 ← 21+5 ↑	7−10↑ 20−9 ↑	.....
154	5−0 ←	.....	.....	5−5 ↑	11+0 ←	13+5 ↑	11+4 ↑	9−8 ← 22−7 ←	.....
155	7+1 ↑	.....	.....	11−6 ←	6−1 ←	3+4 ↑ 18+3 ←	1+3 ↑ 16+2 ←	11−6 ←	.....
156	8+2 ←	.....	2−11↑	16−7 ↑	1−2 ↑ 20−3 ↑	8+2 ← 22+1 ↑	6+1 ← 20+0 ←	1−5 ↑ 14−4 ↑	.....
157	10+3 ←	.....	.....	22−8 ←	15−4 ↑	12+0 ↑	10−1 ↑	3−3 ↑ 16−2 ←	.....
158	12+4 ↑	.....	18−12↑	.....	11−5 ←	3−1 ← 17−2 ←	0−2 ↑ 15−3 ←	5−1 ← 18−0 ←	.....
159	13+5 ←	.....	.....	3−9 ↑	6−6 ←	7−3 ↑ 21−4 ↑	5−4 ← 19−5 ←	8+1 ↑ 21+2 ↑	.....
160	15+6 ↑	20+11↑	.....	9−10←	1−7 ↑ 20−8 ↑	12−5 ←	9−6 ↑ 23−7 ↑	10+3 ↑ 23+4 ←	20−11←

TABLE 42.—*Component hours derived from solar hours*—Continued.

Day of series.	J	K	L	M	N	2N	O	OO	P
161	17+7 ↑	.....	10+11←	14−11↑	16−9 ←	2−6 ↑ 16−7 ↑	14−8 ←	12+5 ←	.....
162	18+8 ←	.....	.....	20−12←	11−10←	7−8 ← 21−9 ←	4−9 ← 18−10←	1+6 ← 15+7 ↑	.....
163	20+9 ↑	.....	.....	.....	6−11↑	11−10↑	8−11↑ 22−12↑	4+8 ↑ 17+9 ↑	.....
164	21+10←	.....	1+10↑	1+11↑	1−12↑ 21+11←	1−11↑ 16−12←	12+11↑	6+10← 19+11←	.....
165	23+11←	.....	.....	7+10←	16+10←	6+11← 20+10↑	3+10← 17+9 ←	8+12← 22−11↑	.....
166	.....	.....	17+9 ←	12+9 ↑	11+9 ←	10+9 ↑	7+8 ↑ 21+7 ↑	11−10↑	.....
167	1+12↑	.....	.....	18+8 ←	6+8 ↑	1+8 ← 15+7 ←	11+6 ↑	0 9 ↑ 13−8 ←	.....
168	2−11←	.....	.....	23+7 ↑	1+7 ↑ 21+6 ←	5+6 ↑ 19+5 ↑	2+5 ← 16+4 ←	2 7 ← 15−6 ←	.....
169	4−10↑	.....	9+8 ←	.....	16+5 ←	10+4 ←	6+3 ↑ 20+2 ↑	5−5 ↑ 18 4 ↑	.....
170	6−9 ↑	.....	.....	5+6 ←	11+4 ↑	0+3 ← 14+2 ↑	10+1 ↑	7−3 ↑ 20−2 ←	.....
171	7−8 ←	.....	.....	10+5 ↑	6+3 ↑	4+1 ↑ 19+0 ←	1+0 ← 15−1 ←	9−1 ← 22−0 ←	.....
172	9−7 ↑	.....	0+7 ↑	16+4 ↑	2+2 ← 21+1 ←	9−1 ← 23−2 ↑	5−2 ← 19−3 ↑	12+1 ↑	.....
173	10−6 ←	.....	.....	22+3 ←	16+0 ↑	13−3 ↑	9−4 ↑	1+2 ↑ 14+3 ↑	.....
174	12−5 ←	.....	16+6 ←	.....	11−1 ↑	4−4 ← 18−5 ←	0−5 ← 14−6 ←	3+4 ← 16+5 ←	.....
175	14−4 ↑	.....	.....	3+2 ↑	6−2 ↑	8−6 ↑ 22−7 ↑	4−7 ← 18−8 ↑	5+6 ← 19+7 ↑	.....
176	15−3 ←	1+12↑	.....	9+1 ←	2−3 ← 21−4 ←	13−8 ←	8−9 ↑ 22−10↑	8+8 ↑ 21+9 ↑	1−12←
177	17−2 ↑	.....	7+5 ↑	14+0 ↑	16−5 ↑	3−9 ← 17−10↑	13−11←	10+10← 23+11←	.....
178	18−1 ←	.....	.....	20−1 ←	11−6 ↑	7−11↑ 22−12←	3−12← 17+11↑	12+12←	.....
179	20−0 ←	.....	23+4 ↑	.....	7−7 ←	12+11←	7+10↑ 21+9 ↑	2−11↑ 15−10↑	.....
180	22+1 ↑	.....	.....	1−2 ↑	2−8 ← 21−9 ↑	2+10↑ 16+9 ↑	12+8 ←	4−9 ↑ 17−8 ←	.....
181	23+2 ←	.....	.....	7−3 ←	16−10↑	7+8 ← 21+7 ←	2+7 ← 16+6 ↑	6−7 ← 19−6 ←	.....
182	.....	.....	15+3 ←	12−4 ↑	12−11←	11+6 ↑	6+5 ↑ 20+4 ↑	9−5 ↑ 22−4 ↑	.....
183	1+3 ↑	.....	.....	18−5 ←	7−12←	1+5 ↑ 16+4 ←	11+3 ←	11−3 ↑	.....
184	3+4 ↑	.....	.....	23−6 ↑	2+11← 21+10↑	6+3 ← 20+2 ↑	1+2 ← 15+1 ←	0−2 ← 13−1 ←	.....
185	4+5 ←	.....	6+2 ↑	.....	16+9 ↑	10+1 ↑	5+0 ↑ 19−1 ↑	2−0 ← 16+1 ↑	.....
186	6+6 ↑	.....	.....	5−7 ←	12+8 ←	1+0 ← 15−1 ←	10−2 ←	5+2 ↑ 18+3 ↑	.....
187	7+7 ←	.....	22+1 ←	10−8 ↑	7+7 ←	5−2 ↑ 19−3 ↑	0−3 ← 14−4 ←	7+4 ← 20+5 ←	.....
188	9+8 ←	.....	.....	16−9 ←	2+6 ↑ 21+5 ↑	10−4 ←	4−5 ↑ 18−6 ↑	9+6 ← 23+7 ↑	.....
189	11+9 ↑	.....	.....	21−10↑	17+4 ←	0−5 ← 14−6 ↑	9−7 ← 23−8 ←	12+8 ↑	.....
190	12+10←	.....	14+0 ←	.....	12+3 ←	4−7 ↑ 19−8 ←	13−9 ←	1+9 ↑ 14+10←	.....
191	14+11↑	6−11←	.....	3−11←	7+2 ↑	9−9 ← 23−10↑	3−10↑ 17−11↑	3+11← 16+12←	6+11↑
192	16+12↑	.....	.....	9−12←	2+1 ↑ 21+0 ↑	13−11↑	7−12↑ 22+11←	6−11↑ 19−10↑	.....
193	17−11←	.....	5−1 ↑	14+11↑	17−1 ←	4−12← 18+11←	12+10←	8−9 ↑ 21−8 ←	.....
194	19−10↑	.....	.....	20+10←	12−2 ←	8+10↑ 22+9 ↑	2+9 ↑ 16+8 ↑	10−7 ← 23−6 ←	.....
195	20−9 ←	.....	21−2 ←	.....	7−3 ↑	13+8 ←	6+7 ↑ 21+6 ←	13−5 ↑	.....
196	22−8 ←	.....	.....	1+9 ↑	2−4 ↑ 22−5 ←	3+7 ← 17+6 ↑	11+5 ←	2−4 ↑ 15−3 ↑	.....
197	.....	.....	.....	7+8 ←	17−6 ←	8+5 ← 22+4 ←	1+4 ↑ 15+3 ↑	4−2 ← 17−1 ←	.....
198	0−7 ↑	.....	12−3 ↑	12+7 ↑	12−7 ↑	12+3 ↑	5+2 ↑ 20+1 ←	6−0 ← 20+1 ↑	.....
199	1−6 ←	.....	.....	18+6 ←	7−8 ↑	2+2 ↑ 17+1 ←	10+0 ←	9+2 ↑ 22+3 ↑	.....
200	3−5 ↑	.....	.....	23+5 ↑	3−9 ← 22−10←	7+0 ← 21−1 ↑	0−1 ← 14−2 ↑	11+4 ←	.....
201	5−4 ↑	.....	4−4 ↑	.....	17−11←	11−2 ↑	4−3 ↑ 19−4 ←	0+5 ← 14+6 ↑	.....
202	6−3 ←	.....	.....	5+4 ←	12−12↑	2−3 ← 16−4 ←	9−5 ← 23−6 ←	3+7 ↑ 16+8 ↑	.....
203	8−2 ↑	.....	20−5 ←	10+3 ↑	7+11↑	6−5 ↑ 20−6 ↑	13−7 ↑	5+9 ← 18+10←	.....
204	9−1 ←	.....	.....	16+2 ←	3+10← 22+9 ←	11−7 ←	3−8 ↑ 18−9 ←	7+11← 21+12↑	.....
205	11−0 ←	.....	.....	21+1 ↑	17+8 ↑	1−8 ← 15−9 ↑	8−10← 22−11←	10−11↑ 23−10↑	.....
206	13+1 ↑	11−10←	11−6 ↑	.....	12+7 ↑	5−10↑ 20−11←	12−12↑	12−9 ←	11+10↑
207	14+2 ←	.....	.....	3+0 ←	8+6 ←	10−12←	2+11↑ 16+10↑	1−8 ← 14−7 ←	.....
208	16+3 ↑	.....	.....	8−1 ↑	3+5 ← 22+4 ↑	0+11↑ 14+10↑	7+9 ← 21+8 ←	4−6 ↑ 17−5 ↑	.....
209	18+4 ↑	.....	3−7 ←	14−2 ←	17+3 ↑	5+9 ← 19+8 ←	11+7 ↑	6−4 ↑ 19−3 ←	.....
210	19+5 ←	.....	.....	19−3 ↑	12+2 ↑	9+7 ↑ 23+6 ↑	1+6 ↑ 15+5 ↑	8−2 ← 21−1 ←	.....
211	21+6 ↑	.....	19−8 ←	.....	8+1 ←	14+5 ←	6+4 ← 20+3 ←	11−0 ↑	.....
212	22+7 ←	.....	.....	1−4 ←	3+0 ← 22−1 ↑	4+4 ← 18+3 ↑	10+2 ←	0+1 ↑ 13+2 ↑	.....
213	.....	.....	.....	7−5 ←	17−2 ↑	8+2 ↑ 23+1 ←	0+1 ↑ 14+0 ↑	2+3 ← 15+4 ←	.....
214	0+8 ←	.....	10−9 ↑	12−6 ↑	13−3 ←	13+0 ←	5−1 ← 19−2 ←	4+5 ← 18+6 ↑	.....
215	2+9 ↑	.....	.....	18−7 ←	8−4 ←	3 1 ↑ 17−2 ↑	9−3 ← 23−4 ↑	7+7 ↑ 20+8 ↑	.....
216	3+10←	.....	.....	23−8 ↑	3−5 ↑ 22−6 ↑	8−3 ← 22−4 ←	13−5 ↑	9+9 ← 22+10←	.....
217	5+11↑	.....	2−10←	.....	18−7 ←	12−5 ↑	4−6 ← 18−7 ←	11+11←	.....
218	6+12←	.....	.....	5−9 ←	13−8 ←	2−6 ↑ 17−7 ←	8−8 ← 22−9 ↑	1+12↑ 14−11↑	.....
219	8−11←	.....	17−11↑	10−10↑	8−9 ←	7−8 ← 21−9 ↑	12−10↑	3−10↑ 16−9 ←	.....
220	10−10↑	.....	.....	16−11←	3−10↑ 22−11↑	11−10↑	2−11↑ 17−12←	5−8 ← 18−7 ←	.....
221	11−9 ←	17−9 ↑	.....	21−12↑	18−12←	2−11← 16−12←	7+11← 21+10↑	8−6 ↑ 21−5 ↑	17+9 ←
222	13−8 ↑	.....	9−12↑	.....	13+11←	6+11↑ 20+10↑	11+9 ↑	10−4 ↑ 23−3 ←	.....
223	15−7 ↑	.....	.....	3+11←	8+10↑	11+9 ←	1+8 ↑ 16+7 ←	12−2 ←	.....
224	16−6 ←	.....	.....	8+10↑	3+9 ↑ 23+8 ←	1+8 ← 15+7 ↑	6+6 ← 20+5 ↑	1−1 ← 15−0 ↑	.....
225	18−5 ↑	.....	1+11←	14+9 ←	18+7 ←	5+6 ↑ 20+5 ←	10+4 ↑	4+1 ↑ 17+2 ↑	.....
226	19−4 ←	.....	.....	19+8 ↑	13+6 ↑	10+4 ←	0+3 ↑ 15+2 ←	6+3 ← 19+4 ←	.....
227	21−3 ←	.....	16+10↑	.....	8+5 ↑	0+3 ↑ 14+2 ↑	5+1 ← 19+0 ←	8+5 ← 22+6 ↑	.....
228	23−2 ↑	.....	.....	1+7 ←	3+4 ↑ 23+3 ←	5+1 ← 19+0 ←	9−1 ↑ 23−2 ↑	11+7 ↑	.....
229	.....	.....	.....	6+6 ↑	18+2 ←	9−1 ↑ 23−2 ↑	14−3 ←	0+8 ↑ 13+9 ←	.....
230	0−1 ←	.....	8+9 ←	12+5 ←	13+1 ↑	14−3 ←	4−4 ← 18−5 ←	2+10← 15+11←	.....
231	2−0 ↑	.....	.....	17+4 ↑	8+0 ↑	4 4 ← 18−5 ↑	8−6 ↑ 22−7 ↑	5+12↑ 18−11↑	.....
232	4−1 ↑	.....	.....	23+3 ↑	4−1 ← 23−2 ←	9−6 ← 23−7 ←	13−8 ←	7−10↑ 20−9 ←	.....
233	5+2 ←	.....	0+8 ←	.....	18−3 ↑	13−8 ↑	3−9 ← 17−10←	9−8 ← 22−7 ←	.....
234	7+3 ↑	.....	.....	5+2 ←	13−4 ↑	3−9 ↑ 18−10←	7−11↑ 21−12↑	12−6 ↑	.....
235	8+4 ←	.....	15+7 ↑	10+1 ↑	9−5 ←	8−11← 22−12↑	11+11↑	1−5 ↑ 14−4 ↑	.....
236	10+5 ←	22−8 ↑	.....	16+0 ←	4−6 ← 23−7 ←	12+11↑	2+10← 16+9 ←	3−3 ← 16−2 ←	22+8 ←
237	12+6 ↑	.....	.....	21−1 ↑	18−8 ↑	3+10← 17+9 ←	6+8 ↑ 20+7 ↑	5−1 ← 19−0 ↑	.....
238	13+7 ←	.....	7+6 ←	.....	13−9 ↑	7+8 ↑ 21+7 ↑	10+6 ↑	8+1 ↑ 21+2 ↑	.....
239	15+8 ↑	.....	.....	3−2 ←	9−10←	12+6 ←	1+5 ← 15+4 ←	10+3 ← 23+4 ←	.....
240	17+9 ↑	.....	22+5 ↑	8−3 ↑	4−11← 23−12↑	2+5 ← 16+4 ↑	5+3 ← 19+2 ↑	12+5 ←	.....

TABLE 42.—*Component hours derived from solar hours*—Continued.

Day of series.	J	K	L	M	N	2N	O	OO	P
241	18+10←	.....	.....	14−4 ←	18+11↑	6+3 ↑ 21+2 ←	9+1 ↑	2+6 ↑ 15+7 ↑	.....
242	20+11↑	.....	.....	19−5 ↑	14+10←	11+1 ←	0+0 ← 14−1 ←	4+8 ↑ 17+9 ←	.....
243	21+12←	.....	14+4 ↑	.....	9+9 ←	1+0 ↑ 15−1 ↑	4−2 ← 18−3 ↑	6+10← 19+11←	.....
244	23−11←	.....	.....	1−6 ←	4+8 ↑ 23+7 ↑	6−2 ← 20−3 ←	8−4 ↑ 23−5 ←	9+12↑ 22−11↑	.....
245	.....	.....	.....	6−7 ↑	18+6 ↑	10−4 ↑	13−6 ←	11−10↑	.....
246	1−10↑	.....	6+3 ←	12−8 ←	14+5 ←	0−5 ↑ 15−6 ←	3−7 ← 17−8 ↑	0−9 ← 13−8 ←	.....
247	2−9 ←	.....	.....	17−9 ↑	9+4 ←	5−7 ← 19−8 ↑	7−9 ↑ 21−10↑	2−7 ← 16−6 ↑	.....
248	4−8 ↑	.....	21+2 ↑	23−10←	4+3 ↑ 23+2 ↑	9−9 ↑	12−11←	5−5 ↑ 18−4 ↑	.....
249	6−7 ↑	.....	.....	.....	19+1 ←	0−10← 14−11←	2−12← 16+11↑	7−3 ← 20−2 ←	.....
250	7−6 ←	.....	.....	4−11↑	14+0 ←	4−12↑ 18+11↑	6+10↑ 20+9 ↑	9−1 ← 23−0 ↑	.....
251	9−5 ↑	.....	13+1 ←	10−12←	9−1 ↑	9+10← 23+9 ←	11+8 ←	12+1 ↑	.....
252	10−4 ←	3−7 ←	.....	16+11←	4−2 ↑	13+8 ↑	1+7 ← 15+6 ↑	1+2 ↑ 14+3 ←	3+7 ↑
253	12−3 ←	.....	.....	21+10↑	0−3 ← 19−4 ←	3+7 ↑ 18+6 ←	5+5 ↑ 19+4 ↑	3+4 ← 16+5 ←	.....
254	14−2 ↑	.....	5+0 ←	.....	14−5 ←	8+5 ← 22+4 ↑	10+3 ←	6+6 ↑ 19+7 ↑	.....
255	15−1 ←	.....	.....	3+9 ←	9−6 ↑	12+3 ↑	0+2 ← 14+1 ←	8+8 ↑ 21+9 ←	.....
256	17−0 ↑	.....	20−1 ↑	8+8 ↑	4−7 ↑	3+2 ← 17+1 ←	4+0 ↑ 18−1 ↑	10+10← 23+11←	.....
257	18+1 ←	.....	.....	14+7 ←	0−8 ← 19−9 ←	7+0 ↑ 21−1 ↑	9−2 ← 23−3 ←	13+12↑	.....
258	20+2 ←	.....	.....	19+6 ↑	14−10↑	12−2 ←	13−4 ←	2−11↑ 15−10←	.....
259	22+3 ↑	.....	12−2 ←	.....	9−11↑	2−3 ← 16−4 ↑	3−5 ↑ 17−6 ↑	4−9 ← 17−8 ←	.....
260	23+4 ←	.....	.....	1+5 ←	5−12←	6−5 ↑ 21−6 ←	8−7 ← 22−8 ←	7−7 ↑ 20−6 ↑	.....
261	.....	.....	.....	6+4 ↑	0+11← 19+10↑	11−7 ←	12−9 ←	9−5 ↑ 22−4 ←	.....
262	1+5 ↑	.....	3−3 ↑	12+3 ←	14+9 ↑	1−8 ↑ 15−9 ↑	2−10↑ 16−11↑	11−3 ←	.....
263	3+6 ↑	.....	.....	17+2 ↑	9+8 ↑	6−10← 20−11←	6−12↑ 21+11←	0−2 ← 14−1 ↑	.....
264	4+7 ←	.....	19−4 ↑	23+1 ←	5+7 ←	10−12↑	11+10←	3−0 ↑ 16+1 ↑	.....
265	6+8 ↑	.....	.....	.....	0+6 ← 19+5 ↑	0+11↑ 15+10←	1+9 ↑ 15+8 ↑	5+2 ← 18+3 ←	.....
266	7+9 ←	.....	.....	4+0 ↑	14+4 ↑	5+9 ← 19+8 ↑	5+7 ↑ 20+6 ←	7+4 ← 21+5 ↑	.....
267	9+10←	8−6 ←	11−5 ←	10−1 ←	10+3 ←	10+7 ←	10+5 ←	10+6 ↑ 23+7 ↑	8+6 ↑
268	11+11↑	.....	.....	15−2 ↑	5+2 ←	0+6 ← 14+5 ↑	0+4 ↑ 14+3 ↑	12+8 ←	.....
269	12+12←	.....	.....	21−3 ←	0+1 ↑ 19+0 ↑	4+4 ↑ 19+3 ←	4+2 ↑ 19+1 ←	1+9 ← 14+10←	.....
270	14−11↑	.....	2−6 ↑	.....	15−1 ←	9+2 ← 23+1 ↑	9+0 ← 23−1 ←	4+11↑ 17+12↑	.....
271	16−10↑	.....	.....	2−4 ↑	10−2 ←	13+0 ↑	13−2 ↑	6−11↑ 19−10←	.....
272	17−9 ←	.....	18−7 ←	8−5 ←	5−3 ←	4−1 ← 18−2 ←	3−3 ↑ 18−4 ←	8−9 ← 21−8 ←	.....
273	19−8 ↑	.....	.....	14−6 ←	0−4 ↑ 19−5 ↑	8−3 ↑ 22−4 ↑	8−5 ← 22−6 ←	11−7 ↑	.....
274	20−7 ←	.....	.....	19−7 ↑	15−6 ←	13−5 ←	12−7 ↑	0−6 ↑ 13−5 ↑	.....
275	22−6 ←	.....	10−8 ←	.....	10−7 ←	3−6 ← 17−7 ↑	2−8 ↑ 16−9 ↑	2−4 ← 15−3 ←	.....
276	.....	.....	.....	1−8 ←	5−8 ↑	7−8 ↑ 22−9 ←	7−10← 21−11←	4−2 ← 18−1 ↑	.....
277	0−5 ↑	.....	.....	6−9 ↑	0−9 ↑ 20−10←	12−10←	11−12↑	7−0 ↑ 20+1 ↑	.....
278	1−4 ←	.....	1−9 ↑	12−10←	15−11←	2−11↑ 16−12↑	1+11↑ 15+10↑	9+2 ← 22+3 ←	.....
279	3−3 ↑	.....	.....	17−11↑	10−12↑	7+11← 21+10←	6+9 ← 20+8 ←	11+4 ←	.....
280	5−2 ↑	.....	17−10←	23−12←	5+11↑	11+9 ↑	10+7 ↑	1+5 ↑ 14+6 ↑	.....
281	6−1 ←	.....	.....	.....	0+10↑ 20+9 ←	1+8 ↑ 16+7 ←	0+6 ↑ 14+5 ↑	3+7 ↑ 16+8 ←	.....
282	8−0 ↑	13−5 ←	.....	4+11↑	15+8 ←	6+6 ← 20+5 ↑	5+4 ← 19+3 ←	5+9 ← 18+10←	13+5 ↑
283	9+1 ←	.....	8−11↑	10+10←	10+7 ↑	10+4 ↑	9+2 ← 23+1 ↑	8+11↑ 21+12↑	.....
284	11+2 ←	.....	.....	15+9 ↑	5+6 ↑	1+3 ← 15+2 ←	13+0 ↑	10−11↑ 23−10←	.....
285	13+3 ↑	.....	.....	21+8 ←	1+5 ← 20+4 ←	5+1 ↑ 19+0 ↑	4−1 ← 18−2 ←	12−9 ←	.....
286	14+4 ←	.....	0−12↑	.....	15+3 ↑	10−1 ←	8−3 ← 22−4 ↑	1−8 ← 15−7 ↑	.....
287	16+5 ↑	.....	.....	2+7 ↑	10+2 ↑	0−2 ← 14−3 ↑	12−5 ↑	4−6 ↑ 17−5 ↑	.....
288	18+6 ↑	.....	16+11←	8+6 ←	6+1 ←	4−4 ↑ 19−5 ←	3−6 ← 17−7 ←	6−4 ← 19−3 ←	.....
289	19+7 ←	.....	.....	13+5 ↑	1+0 ← 20−1 ←	9−6 ← 23−7 ↑	7−8 ← 21−9 ↑	8−2 ← 22−1 ↑	.....
290	21+8 ↑	.....	.....	19+4 ←	15−2 ↑	13−8 ↑	11−10↑	11−0 ↑	.....
291	22+9 ←	.....	7+10↑	.....	10−3 ↑	4−9 ← 18−10←	1−11↑ 16−12←	0+1 ↑ 13+2 ←	.....
292	.....	.....	.....	0+3 ↑	6−4 ←	8−11↑ 22−12↑	6+11← 20+10↑	2+3 ← 15+4 ←	.....
293	0+10←	.....	23+9 ←	6+2 ↑	1−5 ← 20−6 ↑	13+11←	10+9 ↑	5+5 ↑ 18+6 ↑	.....
294	2+11↑	.....	.....	12+1 ←	15−7 ↑	3+10← 17+9 ↑	0+8 ↑ 15+7 ←	7+7 ↑ 20+8 ←	.....
295	3+12←	.....	.....	17+0 ↑	11−8 ←	7+8 ↑ 22+7 ←	5+6 ← 19+5 ↑	9+9 ← 22+10←	.....
296	5−11↑	.....	15+8 ←	23−1 ←	6−9 ←	12+6 ←	9+4 ↑ 23+3 ↑	12+11↑	.....
297	6−10←	19−4 ↑	.....	.....	1−10↑ 20−11↑	2+5 ↑ 16+4 ↑	14+2 ←	1+12↑ 14−11↑	19+4 ←
298	8−9 ←	.....	.....	4−2 ↑	15−12↑	7+3 ← 21+2 ←	4+1 ← 18+0 ←	3−10← 16−9 ←	.....
299	10−8 ↑	.....	6+7 ↑	10−3 ←	11+11←	11+1 ↑	8−1 ↑ 22−2 ↑	5−8 ← 19−7 ↑	.....
300	11−7 ←	.....	.....	15−4 ↑	6+10←	1+0 ↑ 16−1 ←	13−3 ←	8−6 ↑ 21−5 ↑	.....
301	13−6 ↑	.....	22+6 ←	21−5 ←	1+9 ↑ 20+8 ↑	6−2 ← 20−3 ↑	3−4 ← 17−5 ←	10−4 ← 23−3 ←	.....
302	15−5 ↑	.....	.....	.....	16+7 ←	10−4 ↑	7−6 ↑ 21−7 ↑	12−2 ←	.....
303	16−4 ←	.....	.....	2−6 ↑	11+6 ←	1−5 ← 15−6 ↑	11−8 ↑	2−1 ↑ 15−0 ↑	.....
304	18−3 ↑	.....	13+5 ↑	8−7 ←	6+5 ↑	5−7 ↑ 20−8 ←	2−9 ← 16−10←	4+1 ↑ 17+2 ←	.....
305	19−2 ←	.....	.....	13−8 ↑	1+4 ↑ 21+3 ←	10−9 ←	6−11↑ 20−12↑	6+3 ← 19+4 ←	.....
306	21−1 ←	.....	.....	19−9 ←	16+2 ←	0−10↑ 14−11↑	10+11↑	9+5 ↑ 22+6 ↑	.....
307	23−0 ↑	.....	5+4 ↑	.....	11+1 ←	5−12← 19+11←	1+10← 15+9 ←	11+7 ↑	.....
308	.....	.....	.....	0−10↑	6+0 ↑	9+10↑ 23+9 ↑	5+8 ↑ 19+7 ↑	0+8 ← 13+9 ←	.....
309	0+1 ←	.....	21+3 ←	6−11←	1−1 ↑ 21−2 ←	14+8 ←	9+6 ↑	2+10← 16+11↑	.....
310	2+2 ↑	.....	.....	11−12↑	16−3 ←	4+7 ← 18+6 ↑	0+5 ← 14+4 ←	5+12↑ 18−11↑	.....
311	4+3 ↑	.....	.....	17+11←	11−4 ↑	8+5 ↑ 23+4 ←	4+3 ← 18+2 ↑	7−10← 20−9 ←	.....
312	5+4 ←	.....	12+2 ↑	23+10←	6−5 ↑	13+3 ←	8+1 ↑ 23+0 ←	9−8 ← 23−7 ↑	.....
313	7+5 ↑	0−3 ↑	.....	.....	2−6 ← 21−7 ←	3+2 ↑ 17+1 ↑	13−1 ←	12−6 ↑	0+3 ←
314	8+6 ←	.....	.....	4+9 ↑	16−8 ↑	8+0 ← 22−1 ←	3−2 ← 17−3 ↑	1−5 ↑ 14−4 ←	.....
315	10+7 ←	.....	4+1 ←	10+8 ←	11−9 ↑	12−2 ↑	7−4 ↑ 22−5 ←	3−3 ← 17−2 ↑	.....
316	12+8 ↑	.....	.....	15+7 ↑	6−10↑	2−3 ↑ 17−4 ←	12−6 ←	6−1 ↑ 19−0 ↑	.....
317	13+9 ←	.....	20+0 ←	21+6 ←	2−11← 21−12←	7−5 ← 21−6 ↑	2−7 ← 16−8 ↑	8+1 ← 21+2 ←	.....
318	15+10↑	.....	.....	.....	16+11↑	11−7 ↑	6−9 ↑ 20−10↑	10+3 ←	.....
319	17+11↑	.....	.....	2+5 ↑	11+10↑	2−8 ← 16−9 ←	11−11←	0+4 ↑ 13+5 ↑	.....
320	18+12←	.....	11−1 ↑	8+4 ←	7+9 ←	6−10↑ 20−11↑	1−12← 15+11↑	2+6 ↑ 15+7 ←	.....

TABLE 42.—*Component hours derived from solar hours*—Continued.

Day of series.	J	K	L	M	N	2N	O	OO	P
321	20−11↑	.....	.....	13+3 ↑	2+8 ← 21+7 ↑	11−12←	5+10↑ 19+9 ↑	4+8 ← 17+9 ←	.....
322	21−10←	.....	.....	19+2 ←	16+6 ↑	1+11← 15+10↑	10+8 ←	7+10↑ 20+11↑	.....
323	23−9 ←	.....	3−2 ←	.....	12+5 ←	5+9 ↑ 20+8 ←	0+7 ← 14+6 ↑	9+12↑ 22−11←	.....
324	.....	.....	.....	0+1 ↑	7+4 ←	10+7 ←	4+5 ↑ 18+4 ↑	11−10←	.....
325	1−8 ↑	.....	18−3 ↑	6+0 ←	2+3 ↑ 21+2 ↑	0+6 ↑ 14+5 ↑	9+3 ← 23+2 ←	0−9 ← 14−8 ↑	.....
326	2−7 ←	.....	.....	11−1 ↑	16+1 ↑	5+4 ← 19+3 ←	13+1 ←	3−7 ↑ 16−6 ↑	.....
327	4−6 ↑	.....	.....	17−2 ←	12+0 ←	9+2 ↑ 23+1 ↑	3+0 ↑ 17−1 ↑	5−5 ← 18−4 ←	.....
328	6−5 ↑	5−2 ←	10−4 ↑	22−3 ↑	7−1 ←	14+0 ←	8−2 ← 22−3 ←	7−3 ← 21−2 ↑	5+2 ↑
329	7−4 ←	.....	.....	.....	2−2 ↑ 21−3 ↑	4−1 ← 18−2 ↑	12−4 ←	10−1 ↑ 23−0 ↑	.....
330	9−3 ↑	.....	.....	4−4 ←	17−4 ←	8−3 ↑ 23−4 ←	2−5 ↑ 16−6 ↑	12+1 ←	.....
331	10−2 ←	.....	2−5 ←	9−5 ↑	12−5 ←	13−5 ←	7−7 ← 21−8 ←	1+2 ← 14+3 ←	.....
332	12−1 ←	.....	.....	15−6 ←	7−6 ↑	3−6 ↑ 17−7 ↑	11−9 ←	4+4 ↑ 17+5 ↑	.....
333	14−0 ↑	.....	17−6 ↑	21−7 ←	2−7 ↑ 21−8 ↑	8−8 ← 22−9 ←	1−10↑ 15−11↑	6+6 ↑ 19+7 ←	.....
334	15+1 ←	.....	.....	.....	17−9 ←	12−10↑	5−12↑ 20+11←	8+8 ← 21+9 ←	.....
335	17+2 ↑	.....	.....	2−8 ↑	12−10←	2−11↑ 17−12←	10+10←	11+10↑	.....
336	18+3 ←	.....	9−7 ←	8−9 ←	7−11↑	7+11← 21+10↑	0+9 ↑ 14+8 ↑	0+11↑ 13+12↑	.....
337	20+4 ←	.....	.....	13−10↑	2−12↑ 22+11←	11+9 ↑	4+7 ↑ 19+6 ←	2−11← 15−10←	.....
338	22+5 ↑	.....	.....	19−11←	17+10←	2+8 ← 16+7 ↑	9+5 ← 23+4 ←	4−9 ← 18−8 ↑	.....
339	23+6 ←	.....	1−8 ←	.....	12+9 ↑	6+6 ↑ 21+5 ←	13+3 ↑	7−7 ↑ 20−6 ↑	.....
340	.....	.....	.....	0−12↑	7+8 ↑	11+4 ←	3+2 ↑ 18+1 ←	9−5 ← 22−4 ←	.....
341	1+7 ↑	.....	16−9 ↑	6+11←	3+7 ← 22+6 ←	1+3 ↑ 15+2 ↑	8+0 ← 22−1 ←	11−3 ←	.....
342	3+8 ↑	.....	.....	11+10↑	17+5 ↑	6+1 ← 20+0 ←	12−2 ↑	1−2 ↑ 14−1 ↑	.....
343	4+9 ←	10−1 ←	.....	17+9 ←	12+4 ↑	10−1 ↑	2−3 ↑ 17−4 ←	3−0 ↑ 16+1 ←	10+1 ↑
344	6+10↑	.....	8−10←	22+8 ↑	7+3 ↑	0−2 ↑ 15−3 ←	7−5 ← 21−6 ←	5+2 ← 18+3 ←	.....
345	7+11←	.....	.....	.....	3+2 ← 22+1 ←	5−4 ← 19−5 ↑	11−7 ↑	8+4 ↑ 21+5 ↑	.....
346	9+12←	.....	23−11↑	4+7 ←	17+0 ↑	9−6 ↑	1−8 ↑ 15−9 ↑	10+6 ↑ 23+7 ←	.....
347	11−11↑	.....	.....	9+6 ↑	12−1 ↑	0−7 ← 14−8 ←	6−10← 20−11←	12+8 ←	.....
348	12−10←	.....	.....	15+5 ←	8−2 ←	4−9 ↑ 18−10↑	10−12↑	1+9 ← 15+10↑	.....
349	14−9 ↑	.....	15−12↑	20+4 ↑	3−3 ← 22−4 ↑	9−11← 23−12←	0+11↑ 14+10↑	4+11↑ 17+12↑	.....
350	16−8 ↑	.....	.....	.....	17−5 ↑	13+11↑	5+9 ← 19+8 ←	6−11← 19−10←	.....
351	17−7 ←	.....	.....	2+3 ←	13−6 ←	3+10↑ 18+9 ←	9+7 ↑ 23+6 ↑	8−9 ← 22−8 ↑	.....
352	19−6 ↑	.....	7+11←	7+2 ↑	8−7 ←	8+8 ← 22+7 ↑	13+5 ↑	11−7 ↑	.....
353	20−5 ←	.....	.....	13+1 ↑	3−8 ← 22−9 ↑	12+6 ↑	4+4 ← 18+3 ←	0−6 ↑ 13−5 ←	.....
354	22−4 ←	.....	22+10↑	19+0 ←	17−10↑	3+5 ← 17+4 ←	8+2 ← 22+1 ↑	2−4 ← 15−3 ←	.....
355	.....	.....	.....	.....	13−11←	7+3 ↑ 21+2 ↑	12+0 ↑	5−2 ↑ 18−1 ↑	.....
356	0−3 ↑	.....	.....	0−1 ↑	8−12←	12+1 ←	3−1 ← 17−2 ←	7−0 ↑ 20+1 ←	.....
357	1−2 ←	.....	14+9 ←	6−2 ←	3+11↑ 22+10↑	2+0 ← 16−1 ↑	7−3 ← 21−4 ↑	9+2 ← 22+3 ←	.....
358	3−1 ↑	16−0 ↑	.....	11−3 ↑	18+9 ←	6−2 ↑ 21−3 ←	11−5 ↑	12+4 ↑	16+0 ←
359	5−0 ↑	.....	.....	17−4 ←	13+8 ←	11−4 ←	2−6 ← 16−7 ←	1+5 ↑ 14+6 ↑	.....
360	6+1 ←	.....	6+8 ←	22−5 ↑	8+7 ↑	1−5 ↑ 15−6 ↑	6−8 ← 20−9 ↑	3+7 ← 16+8 ←	.....
361	8+2 ↑	.....	.....	.....	3+6 ↑ 22+5 ↑	6−7 ← 20−8 ←	10−10↑	5+9 ← 19+10↑	.....
362	9+3 ←	.....	21+7 ↑	4−6 ←	18+4 ←	10−9 ↑	0−11↑ 15−12←	8+11↑ 21+12↑	.....
363	11+4 ←	.....	.....	9−7 ↑	13+3 ←	0−10↑ 15−11←	5+11← 19+10↑	10−11← 23−10←	.....
364	13+5 ↑	.....	.....	15−8 ←	8+2 ↑	5−12← 19+11↑	9+9 ↑ 23+8 ↑	12−9 ←	.....
365	14+6 ←	.....	13+6 ←	20−9 ↑	3+1 ↑ 23+0 ←	9+10↑	14+7 ←	2−8 ↑ 15−7 ↑	.....
366	16+7 ↑	.....	.....	.....	18−1 ←	0+9 ← 14+8 ←	4+6 ← 18+5 ←	4−6 ↑ 17−5 ←	.....
367	18+8 ↑	.....	.....	2−10←	13−2 ↑	4+7 ↑ 18+6 ↑	8+4 ↑ 22+3 ↑	6−4 ← 19−3 ←	.....
368	19+9 ←	.....	4+5 ↑	7−11↑	8−3 ↑	9+5 ← 23+4 ←	13+2 ←	9−2 ↑ 22−1 ↑	.....
369	21+10↑	.....	.....	13−12←	4−4 ← 23−5 ←	13+3 ↑	3+1 ← 17+0 ←	11−0 ↑	.....
370	22+11←	.....	20+4 ↑	18+11↑	18−6 ←	3+2 ↑ 18+1 ←	7−1 ↑ 21−2 ↑	0+1 ← 13+2 ←	.....
371	.....	.....	.....	.....	13−7 ↑	8+0 ← 22−1 ↑	12−3 ←	2+3 ← 16+4 ↑	.....

TABLE 42.—*Component hours derived from solar hours*—Continued.

Day of series	Q	2Q	R	T	λ	μ or 2MS
1	5−1 ↑ 15−2 ←	4−1 ← 11−2 ← 18−3 ←	.....	.....	.....	8−1 ← 23−2 ←
2	0−3 ← 9−4 ↑ 19−5 ←	1−4 ← 8−5 ← 15−6 ← 22−7 ←	.....	.....	4−1 ↑	13−3 ↑ .....
3	4−6 ↑ 13−7 ↑ 23−8 ←	5−8 ← 12−9 ← 19−10←	.....	.....	.....	4−4 ↑ 19−5 ←
4	8−9 ↑ 17−10↑	2−11← 9−12← 16+11← 23+10←	.....	.....	11−2 ↑	10−6 ← .....
5	3−11← 12−12↑ 22+11←	6+9 ← 13+8 ← 20+7 ←	.....	.....	.....	0−7 ↑ 15−8 ↑
6	7+10← 16+9 ↑	3+6 ← 10+5 ← 17+4 ←	.....	.....	18−3 ↑	6−9 ↑ 21−10←
7	2+8 ← 11+7 ↑ 20+6 ↑	0+3 ← 7+2 ← 14+1 ← 21+0 ←	.....	.....	.....	12−11← .....
8	6+5 ← 15+4 ↑	4−1 ← 11−2 ← 18−3 ←	.....	.....	.....	2−12↑ 17+11↑
9	1+3 ← 10+2 ← 19+1 ↑	1−4 ← 8−5 ← 15−6 ← 22−7 ←	.....	.....	1−4 ↑	8+10← 23+9 ←
10	5+0 ← 14−1 ← 23−2 ↑	5−8 ← 12−9 ← 19−10←	.....	.....	.....	13+8 ↑ .....
11	9−3 ← 18−4 ↑	2−11← 9−12← 16+11← 23+10←	.....	.....	8−5 ↑	4+7 ↑ 19+6 ←
12	3−5 ↑ 13−6 ← 22−7 ↑	6+9 ← 13+8 ← 20+7 ←	.....	.....	.....	10+5 ← .....
13	8−8 ← 17−9 ←	3+6 ← 10+5 ← 17+4 ←	.....	.....	16−6 ←	0+4 ↑ 15+3 ↑
14	2−10↑ 12−11← 21−12↑	0+3 ← 7+2 ← 14+1 ← 21+0 ←	.....	.....	.....	6+2 ← 21+1 ←
15	6+11↑ 16+10←	4−1 ← 11−2 ← 18−3 ←	.....	.....	23−7 ←	11+0 ↑ .....
16	1+9 ↑ 11+8 ← 20+7 ←	1−4 ← 8−5 ← 15−6 ← 21−7 ↑	6+1 ↑	6−1 ←	.....	2−1 ↑ 17−2 ↑
17	5+6 ↑ 15+5 ←	4−8 ↑ 11−9 ↑ 18−10↑	.....	.....	.....	8−3 ← 23−4 ←
18	0+4 ← 9+3 ↑ 19+2 ←	1−11↑ 8−12↑ 15+11↑ 22+10↑	.....	.....	6−8 ←	13−5 ↑ .....
19	4+1 ↑ 13+0 ↑ 23−1 ←	5+9 ↑ 12+8 ↑ 19+7 ↑	.....	.....	.....	4−6 ↑ 19−7 ←
20	8−2 ↑ 18−3 ←	2+6 ↑ 9+5 ↑ 16+4 ↑ 23+3 ↑	.....	.....	13−9 ←	10−8 ← .....
21	3−4 ← 12−5 ↑ 22−6 ←	6+2 ↑ 13+1 ↑ 20+0 ↑	.....	.....	.....	0−9 ↑ 15−10↑
22	7−7 ↑ 16−8 ↑	3−1 ↑ 10−2 ↑ 17−3 ↑	.....	.....	20−10↑	6−11← 21−12←
23	2−9 ← 11−10↑ 20−11↑	0−4 ↑ 7−5 ↑ 14−6 ↑ 21−7 ↑	.....	.....	.....	11+11↑ .....
24	6−12← 15+11↑	4−8 ↑ 11−9 ↑ 18−10↑	.....	.....	.....	2+10↑ 17+9 ←
25	1+10← 10+9 ← 19+8 ↑	1−11↑ 8−12↑ 15+11↑ 22+10↑	.....	.....	3−11↑	8+8 ← 22+7 ↑
26	5+7 ← 14+6 ↑ 23+5 ↑	5+9 ↑ 12+8 ↑ 19+7 ↑	.....	.....	.....	13+6 ↑ .....
27	9+4 ← 18+3 ↑	2+6 ↑ 9+5 ↑ 16+4 ↑ 23+3 ↑	.....	.....	10−12↑	4+5 ↑ 19+4 ←
28	4+2 ← 13+1 ← 22+0 ↑	6+2 ↑ 13+1 ↑ 20+0 ↑	.....	.....	.....	10+3 ← .....
29	8−1 ← 17−2 ←	3−1 ↑ 10−2 ↑ 17−3 ↑	.....	.....	17+11↑	0+2 ↑ 15+1 ↑
30	2−3 ↑ 12−4 ← 21−5 ↑	0−4 ↑ 7−5 ↑ 14−6 ↑ 21−7 ↑	.....	.....	.....	6+0 ← 21−1 ←
31	6−6 ↑ 16−7 ←	4−8 ↑ 11−9 ↑ 18−10↑	.....	.....	.....	11−2 ↑ .....
32	1−8 ↑ 11−9 ← 20−10←	1−11↑ 8−12← 15+11← 22+10←	.....	.....	0+10↑	2−3 ↑ 17−4 ←
33	5−11↑ 15−12←	5+9 ← 12+8 ← 19+7 ←	.....	.....	.....	8−5 ← 22−6 ↑
34	0+11↑ 9+10↑ 19+9 ←	2+6 ← 9+5 ← 16+4 ← 23+3 ←	.....	.....	8+9 ←	13−7 ↑ .....
35	4+8 ↑ 13+7 ↑ 23+6 ←	6+2 ← 13+1 ← 20+0 ←	.....	.....	.....	4−8 ← 19−9 ←
36	8+5 ↑ 18+4 ←	3−1 ← 10−2 ← 17−3 ←	.....	.....	15+8 ←	10−10← .....
37	3+3 ← 12+2 ↑ 22+1 ←	0−4 ← 7−5 ← 14−6 ← 21−7 ←	.....	.....	.....	0−11↑ 15−12↑
38	7+0 ↑ 16−1 ↑	4−8 ← 11−9 ← 18−10←	.....	.....	22+7 ←	6+11← 21+10←
39	2−2 ← 11−3 ↑ 21−4 ←	1−11← 8−12← 15+11← 22+10←	.....	.....	.....	11+9 ↑ .....
40	6−5 ← 15−6 ↑	5+9 ← 12+8 ← 19+7 ←	.....	.....	.....	2+8 ↑ 17+7 ←
41	1−7 ← 10−8 ↑ 19−9 ↑	2+6 ← 9+5 ← 16+4 ← 23+3 ←	.....	.....	5+6 ←	8+6 ← 22+5 ↑
42	5−10← 14−11↑ 23−12↑	6+2 ← 13+1 ← 20+0 ←	.....	.....	.....	13+4 ↑ .....
43	9+11← 18+10↑	3−1 ← 10−2 ← 17−3 ←	.....	.....	12+5 ↑	4+3 ← 19+2 ←
44	4+9 ← 13+8 ← 22+7 ↑	0−4 ← 7−5 ← 14−6 ← 21−7 ←	.....	.....	.....	9+1 ↑ .....
45	8+6 ← 17+5 ↑	4−8 ← 11−9 ← 18−10←	.....	.....	19+4 ↑	0+0 ↑ 15−1 ←
46	2+4 ↑ 12+3 ← 21+2 ↑	1−11← 8−12← 15+11← 22+10←	16+2 ←	16−2 ↑	.....	6−2 ← 21−3 ←
47	7+1 ← 16+0 ←	5+9 ← 12+8 ← 19+7 ←	.....	.....	.....	11−4 ↑ .....
48	1−1 ↑ 11−2 ← 20−3 ←	1+6 ↑ 8+5 ↑ 15+4 ↑ 22+3 ↑	.....	.....	2+3 ↑	2−5 ↑ 17−6 ←
49	5−4 ↑ 15−5 ←	5+2 ↑ 12+1 ↑ 19+0 ↑	.....	.....	.....	8−7 ← 22−8 ↑
50	0−6 ↑ 9−7 ↑ 19−8 ←	2−1 ↑ 9−2 ↑ 16−3 ↑ 23−4 ↑	.....	.....	9+2 ↑	13−9 ↑ .....
51	4−9 ↑ 14−10← 23−11←	6−5 ↑ 13−6 ↑ 20−7 ↑	.....	.....	.....	4−10← 19−11←
52	8−12↑ 18+11←	3−8 ↑ 10−9 ↑ 17−10↑	.....	.....	16+1 ↑	9−12↑ .....
53	3+10↑ 12+9 ↑ 22+8 ←	0−11↑ 7−12↑ 14+11↑ 21+10↑	.....	.....	.....	0+11↑ 15+10←
54	7+7 ↑ 16+6 ↑	4+9 ↑ 11+8 ↑ 18+7 ↑	.....	.....	.....	6+9 ← 20+8 ↑
55	2+5 ← 11+4 ↑ 21+3 ←	1+6 ↑ 8+5 ↑ 15+4 ↑ 22+3 ↑	.....	.....	0+0 ←	11+7 ↑ .....
56	6+2 ← 15+1 ↑	5+2 ↑ 12+1 ↑ 19+0 ↑	.....	.....	.....	2+6 ← 17+5 ←
57	1+0 ← 10−1 ↑ 19−2 ↑	2−1 ↑ 9−2 ↑ 16−3 ↑ 23−4 ↑	.....	.....	7−1 ←	8+4 ← 22+3 ↑
58	5−3 ← 14−4 ↑	6−5 ↑ 13−6 ↑ 20−7 ↑	.....	.....	.....	13+2 ↑ .....
59	0−5 ← 9−6 ← 18−7 ↑	3−8 ↑ 10−9 ↑ 17−10↑	.....	.....	14−2 ←	4+1 ← 19+0 ←
60	4−8 ← 13−9 ← 22−10↑	0−11↑ 7−12↑ 14+11↑ 21+10↑	.....	.....	.....	9−1 ↑ .....
61	8−11← 17−12↑	4+9 ↑ 11+8 ↑ 18+7 ↑	.....	.....	21−3 ←	0−2 ↑ 15−3 ←
62	2+11↑ 12+10← 21+9 ↑	1+6 ↑ 8+5 ↑ 15+4 ↑ 22+3 ↑	.....	.....	.....	6−4 ← 20−5 ↑
63	7+8 ← 16+7 ←	5+2 ↑ 12+1 ↑ 19+0 ←	.....	.....	.....	11−6 ↑ .....
64	1+6 ↑ 11+5 ← 20+4 ↑	2−1 ← 9−2 ← 16−3 ← 23−4 ←	.....	.....	4−4 ↑	2−7 ← 17−8 ←
65	5+3 ↑ 15+2 ←	6−5 ← 13−6 ← 20−7 ←	.....	.....	.....	7−9 ↑ 22−10↑
66	0+1 ↑ 9+0 ↑ 19−1 ←	3−8 ← 10−9 ← 17−10←	.....	.....	11−5 ↑	13−11↑ .....
67	4−2 ↑ 14−3 ← 23−4 ←	0−11← 7−12← 14+11← 21+10←	.....	.....	.....	4−12← 19+11←
68	8−5 ↑ 18−6 ←	4+9 ← 11+8 ← 18+7 ←	.....	.....	18−6 ↑	9+10↑ .....
69	3−7 ↑ 12−8 ↑ 22−9 ←	1+6 ← 8+5 ← 15+4 ← 22+3 ←	.....	.....	.....	0+9 ↑ 15+8 ←
70	7−10↑ 17−11←	5+2 ← 12+1 ← 19+0 ←	.....	.....	.....	6+7 ← 20+6 ↑
71	2−12← 11+11↑ 21+10←	2−1 ← 9−2 ← 16−3 ← 23−4 ←	.....	.....	1−7 ↑	11+5 ↑ .....
72	6+9 ↑ 15+8 ↑	6−5 ← 13−6 ← 20−7 ←	.....	.....	.....	2+4 ← 17+3 ←
73	1+7 ← 10+6 ↑ 19+5 ↑	3−8 ← 10−9 ← 17−10←	.....	.....	8−8 ↑	7+2 ↑ 22+1 ↑
74	5+4 ← 14+3 ↑	0−11← 7−12← 14+11← 21+10←	.....	.....	.....	13+0 ← .....
75	0+2 ← 9+1 ← 18+0 ↑	4+9 ← 11+8 ← 18+7 ←	.....	.....	16−9 ←	4−1 ← 18−2 ↑
76	4−1 ← 13−2 ↑ 22−3 ↑	1+6 ← 8+5 ← 15+4 ← 22+3 ←	.....	.....	.....	9−3 ↑ .....
77	8−4 ← 17−5 ↑	5+2 ← 12+1 ← 19+0 ←	3+3 ↑	3−3 ←	23−10←	0−4 ↑ 15−5 ←
78	3−6 ← 12−7 ← 21−8 ↑	2−1 ← 9−2 ← 16−3 ← 23−4 ←	.....	.....	.....	6−6 ← 20−7 ↑
79	7−9 ← 16−10←	5−5 ↑ 12−6 ↑ 19−7 ↑	.....	.....	.....	11−8 ↑ .....
80	1−11↑ 11−12← 20+11↑	2−8 ↑ 9−9 ↑ 16−10↑ 23−11↑	.....	.....	6−11←	2−9 ← 17−10←

TABLE 42.—*Component hours derived from solar hours*—Continued.

Day of series	Q				2 Q				R	T	λ	μ or 2 MS	
81	5+10↑	15+9 ←	.....		6−12↑	13+11↑	20+10↑	.....	.....	.....	.....	7−11↑	22−12↑
82	0+8 ↑	10+7 ←	19+6 ←		3+9 ↑	10+8 ↑	17+7 ↑	.....	.....	.....	13−12←	13+11←	.....
83	4+5 ↑	14+4 ←	23+3 ↑		0+6 ↑	7 +5 ↑	14+4 ↑	21+3 ↑	.....	.....	.....	4+10←	18+9 ↑
84	8+2 ↑	18+1 ←	.....		4+2 ↑	11+1 ↑	18+0 ↑	.....	.....	.....	20+11←	9+8 ↑	.....
85	3+0 ↑	12−1 ↑	22−2 ←		1−1 ↑	8 −2 ↑	15−3 ↑	22−4 ↑	.....	.....	.....	0+7 ←	15+6 ←
86	7−3 ↑	17−4 ←	.....		5−5 ↑	12−6 ↑	19−7 ↑	.....	.....	.....	.....	5+5 ↑	20+4 ↑
87	2−5 ←	11−6 ↑	21−7 ←		2−8 ↑	9−9 ↑	16−10↑	23−11↑	.....	.....	3+10↑	11+3 ↑	.....
88	6−8 ↑	15−9 ↑	.....		6−12↑	13+11↑	20+10↑	.....	.....	.....	.....	2+2 ←	17+1 ←
89	1−10←	10−11↑	20−12←		3+9 ↑	10+8 ↑	17+7 ↑	.....	.....	.....	10+9 ↑	7+0 ↑	22−1 ↑
90	5+11←	14+10↑	.....		0+6 ↑	7+5 ↑	14+4 ↑	21+3 ↑	.....	.....	.....	13−2 ←	.....
91	0+9 ←	9+8 ←	18+7 ↑		4+2 ↑	11+1 ↑	18+0 ↑	.....	.....	.....	17+8 ↑	4−3 ←	18−4 ↑
92	4+6 ←	13+5 ↑	22+4 ↑		1−1 ↑	8−2 ↑	15−3 ↑	22−4 ↑	.....	.....	.....	9−5 ↑	.....
93	8+3 ←	17+2 ↑	.....		5−5 ↑	12−6 ↑	19−7 ↑	.....	.....	.....	.....	0−6 ←	15−7 ←
94	3+1 ←	12+0 ←	21−1 ↑		2−8 ↑	9−9 ↑	16−10↑	23−11←	.....	.....	0+7 ↑	5−8 ↑	20−9 ↑
95	7−2 ←	16−3 ↑	.....		6−12←	13+11←	20+10←	.....	.....	.....	.....	11−10←	.....
96	1−4 ↑	11−5 ←	20−6 ↑		3+9 ←	10+8 ←	17+7 ←	.....	.....	.....	8+6 ←	2−11←	17−12←
97	6−7 ←	15−8 ←	.....		0+6 ←	7+5 ←	14+4 ←	21+3 ←	.....	.....	.....	7+11↑	22+10↑
98	0−9 ↑	10−10←1	9−11←		4+2 ←	11+1 ←	18+0 ←	.....	.....	.....	15+5 ←	13+9 ←	.....
99	4−12↑	14+11←2	3+10↑		1−1 ←	8−2 ←	15−3 ←	22−4 ←	.....	.....	.....	4+8 ←	18+7 ↑
100	8+9 ↑	18+8 ←	.....		5−5 ←	12−6 ←	19−7 ←	.....	.....	.....	22+4 ←	9+6 ↑	.....
101	3+7 ↑	13+6 ←	22+5 ←		2−8 ←	9−9 ←	16−10←	23−11←	.....	.....	.....	0+5 ←	15+4 ←
102	7+4 ↑	17+3 ←	.....		6−12←	13+11←	20+10←	.....	.....	.....	.....	5+3 ↑	20+2 ↑
103	2+2 ↑	11+1 ↑	21+0 ←		3+9 ←	10+8 ←	17+7 ←	.....	.....	.....	5+3 ←	11+1 ←	.....
104	6−1 ↑	15−2 ↑	.....		0+6 ←	7+5 ←	14+4 ←	21+3 ←	.....	.....	.....	2+0 ←	16−1 ↑
105	1−3 ←	10−4 ↑	20−5 ←		4+2 ←	11+1 ←	18+0 ←	.....	.....	.....	12+2 ←	7−2 ↑	22−3 ←
106	5−6 ←	14−7 ↑	.....		1−1 ←	8−2 ←	15−3 ←	22−4 ←	.....	.....	.....	13−4 ←	.....
107	0−8 ←	9−9 ↑	18−10↑		5−5 ←	12−6 ←	19−7 ←	.....	13+4 ←	13−4 ↑	19+1 ↑	4−5 ←	18−6 ↑
108	4−11←	13−12↑	23+11←		2−8 ←	9−9 ←	16−10←	23−11←	.....	.....	.....	9−7 ↑	.....
109	8+10←	17+9 ↑	.....		6−12←	13+11←	20+10←	.....	.....	.....	.....	0−8 ←	15−9 ←
110	3+8 ←	12+7 ←	21+6 ↑		3+9 ←	10+8 ←	16+7 ↑	23+6 ↑	.....	.....	2+0 ↑	5−10↑	20−11↑
111	7+5 ←	16+4 ↑	.....		6+5 ↑	13+4 ↑	20+3 ↑	.....	.....	.....	.....	11−12←	.....
112	1+3 ↑	11+2 ←	20+1 ↑		3+2 ↑	10+1 ↑	17+0 ↑	.....	.....	.....	9−1 ↑	2+11←	16+10↑
113	6+0 ←	15−1 ←	.....		0−1 ↑	7−2 ↑	14−3 ↑	21−4 ↑	.....	.....	.....	7+9 ↑	22+8 ←
114	0−2 ↑	10−3 ←	19−4 ↑		4−5 ↑	11−6 ↑	18−7 ↑	.....	.....	.....	16−2 ↑	13+7 ←	.....
115	4−5 ↑	14−6 ←	23−7 ↑		1−8 ↑	8−9 ↑	15−10↑	22−11↑	.....	.....	.....	3+6 ↑	18+5 ↑
116	8−8 ↑	18−9 ←	.....		5−12↑	12+11↑	19+10↑	.....	.....	.....	.....	9+4 ←	.....
117	3−10↑	13−11←	22−12←		2+9 ↑	9+8 ↑	16+7 ↑	23+6 ↑	.....	.....	0−3 ←	0+3 ←	15+2 ←
118	7+11↑	17+10←	.....		6+5 ↑	13+4 ↑	20+3 ↑	.....	.....	.....	.....	5+1 ↑	20+0 ↑
119	2+9 ↑	11+8 ↑	21+7 ←		3+2 ↑	10+1 ↑	17+0 ↑	.....	.....	.....	7−4 ←	11−1 ←	.....
120	6+6 ↑	16+5 ←	.....		0−1 ↑	7−2 ↑	14−3 ↑	21−4 ↑	.....	.....	.....	2−2 ←	16−3 ↑
121	1+4 ←	10+3 ↑	20+2 ←		4−5 ↑	11−6 ↑	18−7 ↑	.....	.....	.....	14−5 ←	7−4 ↑	22−5 ←
122	5+1 ↑	14+0 ↑	.....		1−8 ↑	8−9 ↑	15−10↑	22−11↑	.....	.....	.....	13−6 ←	.....
123	0−1 ←	9−2 ↑	18−3 ↑		5−12↑	12+11↑	19+10↑	.....	.....	.....	21−6 ←	3−7 ↑	18−8 ↑
124	4−4 ←	13−5 ↑	23−6 ←		2+9 ↑	9+8 ↑	16+7 ↑	23+6 ↑	.....	.....	.....	9−9 ←	.....
125	8−7 ←	17−8 ↑	.....		6+5 ↑	13+4 ↑	20+3 ↑	.....	.....	.....	.....	0−10←	14−11↑
126	3−9 ←	12−10↑	21−11↑		3+2 ←	10+1 ←	17+0 ←	.....	.....	.....	4−7 ←	5−12↑	20+11↑
127	7−12←	16+11↑	.....		0−1 ←	7−2 ←	14−3 ←	21−4 ←	.....	.....	.....	11+10←	.....
128	2+10←	11+9 ←	20+8 ↑		4−5 ←	11−6 ←	18−7 ←	.....	.....	.....	11−8 ↑	2+9 ←	16+8 ↑
129	6+7 ←	15+6 ←	.....		1−8 ←	8−9 ←	15−10←	22−11←	.....	.....	.....	7+7 ↑	22+6 ←
130	0+5 ↑	10+4 ←	19+3 ↑		5−12←	12+11←	19+10←	.....	.....	.....	18−9 ↑	13+5 ←	.....
131	4+2 ↑	14+1 ←	23+0 ↑		2+9 ←	9+8 ←	16+7 ←	23+6 ←	.....	.....	.....	3+4 ↑	18+3 ↑
132	9−1 ←	18−2 ←	.....		6+5 ←	13+4 ←	20+3 ←	.....	.....	.....	.....	9+2 ←	.....
133	3−3 ↑	13−4 ←	22−5 ↑		3+2 ←	10+1 ←	17+0 ←	.....	.....	.....	1−10↑	0+1 ←	14+0 ↑
134	7−6 ↑	17−7 ←	.....		0−1 ←	7−2 ←	14−3 ←	21−4 ←	.....	.....	.....	5−1 ↑	20−2 ←
135	2−8 ↑	11−9 ↑	21−10←		4−5 ←	11−6 ←	18−7 ←	.....	.....	.....	8−11↑	11−3 ←	.....
136	6−11↑	16−12←	.....		1−8 ←	8−9 ←	15−10←	22−11←	.....	.....	.....	1−4 ↑	16−5 ↑
137	1+11←	10+10↑	20+9 ←		5−12←	12+11←	19+10←	.....	.....	.....	15−12↑	7−6 ↑	22−7 ←
138	5+8 ↑	14+7 ↑	.....		2+9 ←	9+8 ←	16+7 ←	23+6 ←	0+5 ↑	0−5 ←	.....	13−8 ←	.....
139	0+6 ←	9+5 ↑	19+4 ←		6+5 ←	13+4 ←	20+13←	.....	.....	.....	23+11←	3−9 ↑	18−10↑
140	4+3 ←	13+2 ↑	23+1 ←		3+2 ←	10+1 ←	17+0 ←	.....	.....	.....	.....	9−11←	.....
141	8+0 ←	17−1 ↑	.....		0−1 ←	7−2 ←	14−3 ←	20−4 ↑	.....	.....	.....	0−12←	14+11↑
142	3−2 ←	12−3 ↑	21−4 ↑		3−5 ↑	10−6 ↑	17−7 ↑	.....	.....	.....	6+10←	5+10↑	20+9 ←
143	7−5 ←	16−6 ↑	.....		0−8 ↑	7−9 ↑	14−10↑	21−11↑	.....	.....	.....	11+8 ←	.....
144	2−7 ←	11−8 ←	20−9 ↑		4−12↑	11+11↑	18+10↑	.....	.....	.....	13+9 ←	1+7 ↑	16+6 ↑
145	6−10←	15−11↑	.....		1+9 ↑	8+8 ↑	15+7 ↑	22+6 ↑	.....	.....	.....	7+5 ←	22+4 ←
146	0−12↑	10+11←	19+10↑		5+5 ↑	12+4 ↑	19+3 ↑	.....	.....	.....	20+8 ←	12+3 ↑	.....
147	5+9 ←	14+8 ←	23+7 ↑		2+2 ↑	9+1 ↑	16+0 ↑	23−1 ↑	.....	.....	.....	3+2 ↑	18+1 ↑
148	9+6 ←	18+5 ←	.....		6−2 ↑	13−3 ↑	20−4 ↑	.....	.....	.....	.....	9+0 ←	.....
149	3+4 ↑	13+3 ←	22+2 ↑		3−5 ↑	10−6 ↑	17−7 ↑	.....	.....	.....	3+7 ↑	0−1 ←	14−2 ↑
150	7+1 ↑	17+0 ←	.....		0−8 ↑	7−9 ↑	14−10↑	21−11↑	.....	.....	.....	5−3 ↑	20−4 ←
151	2−1 ↑	12−2 ←	21−3 ←		4−12↑	11+11↑	18+10↑	.....	.....	.....	10+6 ↑	11−5 ←	.....
152	6−4 ↑	16−5 ←	.....		1+9 ↑	8+8 ↑	15+7 ↑	22+6 ↑	.....	.....	.....	1−6 ↑	16−7 ↑
153	1−6 ↑	10−7 ↑	20−8 ←		5+5 ↑	12+4 ↑	19+3 ↑	.....	.....	.....	17+5 ↑	7−8 ←	22−9 ←
154	5−9 ↑	14−10↑	.....		2+2 ↑	9+1 ↑	16+0 ↑	23−1 ↑	.....	.....	.....	12−10↑	.....
155	0−11←	9−12↑	19+11←		6−2 ↑	13−3 ↑	20−4 ↑	.....	.....	.....	.....	3−11↑	18−12←
156	4+10←	13+9 ↑	23+8 ←		3−5 ↑	10−6 ↑	17−7 ↑	.....	.....	.....	0+4 ↑	9+11←	.....
157	8+7 ↑	17+6 ↑	.....		0−8 ↑	7−9 ↑	14−10←	21−11←	.....	.....	.....	0+10←	14+9 ↑
158	3+5 ←	12+4 ↑	22+3 ←		4−12←	11+11←	18+10←	.....	.....	.....	7+3 ↑	5+8 ↑	20+7 ←
159	7+2 ←	16+1 ↑	.....		1+9 ←	8+8 ←	15+7 ←	22+6 ←	.....	.....	.....	11+6 ←	.....
160	2+0 ←	11−1 ←	20−2 ↑		5+5 ←	12+4 ←	19+3 ←	.....	.....	.....	15+2 ←	1+5 ↑	16+4 ↑

TABLE 42.—*Component hours derived from solar hours*—Continued.

Day of series.	Q			2Q				R	T	λ	μ or 2MS	
161	6−3 ←	15−4 ↑	.....	2+2 ←	9+1 ←	16+0 ←	23−1 ←	.....	.....	.....	7+3 ←	22+2 ←
162	0−5 ↑	10−6 ←	19−7 ↑	6−2 ←	13−3 ←	20−4 ←	.....	.....	.....	22+1 ←	12+1 ↑	.....
163	5−8 ←	14−9 ←	23−10 ↑	3−5 ←	10−6 ←	17−7 ←	.....	.....	.....	.....	3+0 ↑	18−1 ←
164	9−11←	18−12↑	.....	0−8 ←	7−9 ←	14−10←	21−11←	.....	.....	.....	9−2 ←	23−3 ↑
165	3+11↑	13+10←	22+9 ↑	4−12←	11+11←	18+10←	.....	.....	.....	5+0 ←	14−4 ↑	.....
166	7+8 ↑	17+7 ←	.....	1+9 ←	8+8 ←	15+7 ←	22+6 ←	.....	.....	.....	5−5 ←	20−6 ←
167	2+6 ↑	12+5 ←	21+4 ←	5+5 ←	12+4 ←	19+3 ←	.....	.....	.....	12−1 ←	11−7 ←	.....
168	6+3 ↑	16+2 ←	.....	2+2 ←	9+1 ←	16+0 ←	23−1 ←	10+6 ←	10−6 ↑	....	1−8 ↑	16−9 ↑
169	1+1 ↑	10+0 ↑	20−1 ←	6−2 ←	13−3 ←	20−4 ←	.....	.....	.....	19−2 ↑	7−10←	22−11←
170	5−2 ↑	15−3 ←	.....	3−5 ←	10−6 ←	17−7 ←	.....	.....	.....	.....	12−12↑	.....
171	0−4 ←	9−5 ↑	19−6 ←	0−8 ←	7−9 ←	14−10←	21−11←	.....	.....	.....	3+11↑	18+10←
172	4−7 ←	13−8 ↑	23−9 ←	4−12←	11+11←	18+10←	.....	.....	.....	2−3 ↑	9+9 ←	23+8 ↑
173	8−10↑	17−11↑	.....	0+9 ↑	7+8 ↑	14+7 ↑	21+6 ↑	.....	.....	.....	14+7 ↑	.....
174	3−12←	12+11↑	22+10←	4+5 ↑	11+4 ↑	18+3 ↑	.....	.....	.....	9−4 ↑	5+6 ←	20+5 ←
175	7+9 ←	16+8 ↑	.....	1+2 ↑	8+1 ↑	15+0 ↑	22−1 ↑	.....	.....	.....	10+4 ↑	.....
176	2+7 ←	11+6 ↑	20+5 ↑	5−2 ↑	12−3 ↑	19−4 ↑	.....	.....	.....	16−5 ↑	1+3 ↑	16+2 ←
177	6+4 ←	15+3 ↑	.....	2−5 ↑	9−6 ↑	16−7 ↑	23−8 ↑	.....	.....	.....	7+1 ←	22+0 ←
178	1+2 ←	10+1 ←	19+0 ↑	6−9 ↑	13−10↑	20−11↑	.....	.....	.....	23−6 ↑	12−1 ↑	.....
179	5−1 ←	14−2 ←	23−3 ↑	3−12↑	10+11↑	17+10↑	.....	.....	.....	.....	3−2 ↑	18−3 ←
180	9−4 ←	18−5 ↑	.....	0+9 ↑	7+8 ↑	14+7 ↑	21+6 ↑	.....	.....	.....	9−4 ←	23−5 ↑
181	3−6 ↑	13−7 ←	22−8 ↑	4+5 ↑	11+4 ↑	18+3 ↑	....	.....	.....	7−7 ←	14−6 ↑	.....
182	8−9 ←	17−10←	.....	1+2 ↑	8+1 ↑	15+0 ↑	22−1 ↑	.....	.....	.....	5−7 ←	20−8 ←
183	2−11↑	12−12←	21+11↑	5−2 ↑	12−3 ↑	19−4 ↑	.....	.....	.....	14−8 ←	10−9 ↑	.....
184	6+10↑	16+9 ←	.....	2−5 ↑	9−6 ↑	16−7 ↑	23−8 ↑	.....	.....	.....	1−10↑	16−11←
185	1+8 ↑	10+7 ↑	20+6 ←	6−9 ↑	13−10↑	20−11↑	.....	.....	.....	21−9 ←	7−12←	21+11↑
186	5+5 ↑	15+4 ←	.....	3−12↑	10+11↑	17+10↑	.....	.....	.....	.....	12+10↑	....
187	0+3 ←	9+2 ↑	19+1 ←	0+9 ↑	7+8 ↑	14+7 ↑	21+6 ↑	.....	.....	.....	3+9 ↑	18+8 ←
188	4+0 ↑	13−1 ↑	23−2 ←	4+5 ↑	11+4 ↑	18+3 ←	.....	.....	.....	4−10←	9+7 ←	23+6 ↑
189	8−3 ↑	18−4 ←	.....	1+2 ←	8+1 ←	15+0 ←	22−1 ←	.....	.....	.....	14+5 ↑	....
190	3−5 ←	12−6 ↑	22−7 ←	5−2 ←	12−3 ←	19−4 ←	.....	.....	.....	11−11↑	5+4 ←	20+3 ←
191	7−8 ←	16−9 ↑	.....	2−5 ←	9−6 ←	16−7 ←	23−8 ←	.....	.....	.....	10+2 ↑	.....
192	2−10←	11−11↑	20−12↑	6−9 ←	13−10←	20−11←	.....	.....	.....	18−12↑	1+1 ↑	16+0 ←
193	6+11←	15+10↑	.....	3−12←	10+11←	17+10←	.....	.....	.....	.....	7−1 ←	21−2 ↑
194	1+9 ←	10+8 ←	19+7 ↑	0+9 ←	7+8 ←	14+7 ←	21+6 ←	.....	.....	.....	12−3 ↑	.....
195	5+6 ←	14+5 ↑	23+4 ↑	4+5 ←	11+4 ←	18+3 ←	.....	.....	.....	1+11↑	3−4 ←	18−5 ←
196	9+3 ←	18+2 ↑	.....	1+2 ←	8+1 ←	15+0 ←	22−1 ←	.....	.....	.....	8−6 ↑	23−7 ↑
197	3+1 ↑	13+0 ←	22−1 ↑	5−2 ←	12−3 ←	19−4 ←	.....	.....	.....	8+10↑	14−8 ↑	.....
198	8−2 ←	17−3 ←	.....	2−5 ←	9−6 ←	16−7 ←	23−8 ←	21+7 ↑	21−7 ←	.....	5−9 ←	20−10←
199	2−4 ↑	12−5 ←	21−6 ↑	6−9 ←	13−10←	20−11←	.....	.....	.....	15+9 ↑	10−11↑	.....
200	6−7 ↑	16−8 ←	.....	3−12←	10+11←	17+10←	.....	.....	.....	....	1−12↑	16+11←
201	1−9 ↑	11−10←	20−11←	0+9 ←	7+8 ←	14+7 ←	21+6 ←	.....	.....	23+8 ←	7+10←	21+9 ↑
202	5−12↑	15+11←	.....	4+5 ←	11+4 ←	18+3 ←	.....	.....	.....	....	12+8 ↑	.....
203	0+10↑	9+9 ↑	19+8 ←	1+2 ←	8+1 ←	15+0 ←	22−1 ←	.....	.....	.....	3+7 ←	18+6 ←
204	4+7 ↑	13+6 ↑	23+5 ←	4−2 ↑	11+3 ↑	18−4 ↑	.....	.....	.....	6+7 ←	8+5 ↑	23+4 ↑
205	8+4 ↑	18+3 ←	.....	1−5 ↑	8−6 ↑	15−7 ↑	22−8 ↑	.....	.....	.....	14+3 ←	.....
206	3+2 ←	12+1 ↑	22+0 ←	5−9 ↑	12−10↑	19−11↑	.....	.....	.....	13+6 ←	5+2 ←	19+1 ↑
207	7−1 ↑	16−2 ↑	.....	2−12↑	9+11↑	16+10↑	23+9 ↑	.....	.....	.....	10+0 ↑	.....
208	2−3 ←	11−4 ↑	21−5 ←	6+8 ↑	13+7 ↑	20+6 ↑	.....	.....	.....	20+5 ←	1−1 ↑	16−2 ←
209	6−6 ←	15−7 ↑	.....	3+5 ↑	10+4 ↑	17+3 ↑	.....	.....	.....	.....	7−3 ←	21−4 ↑
210	1−8 ←	10−9 ←	19−10←	0+2 ↑	7+1 ↑	14+0 ↑	21−1 ↑	.....	.....	.....	12−5 ↑	.....
211	5−11←	14−12↑	23+11↑	4−2 ↑	11−3 ↑	18−4 ↑	.....	.....	.....	3+4 ←	3−6 ←	18−7 ←
212	9+10←	18+9 ↑	.....	1−5 ↑	8−6 ↑	15−7 ↑	22−8 ↑	.....	.....	.....	8−8 ↑	23−9 ↑
213	4+8 ←	13+7 ←	22+6 ↑	5−9 ↑	12−10↑	19−11↑	.....	.....	.....	10+3 ↑	14−10←	.....
214	8+5 ←	17+4 ↑	.....	2−12↑	9+11↑	16+10↑	23+9 ↑	.....	.....	.....	5−11←	19−12↑
215	2+3 ↑	12+2 ←	21+1 ↑	6+8 ↑	13+7 ↑	20+6 ↑	.....	....	.....	17+2 ↑	10+11↑	.....
216	6+0 ↑	16−1 ←	.....	3+5 ↑	10+4 ↑	17+3 ↑	.....	.....	.....	.....	1+10←	16+9 ←
217	1−2 ↑	11−3 ←	20−4 ←	0+2 ↑	7+1 ↑	14+0 ↑	21−1 ↑	.....	.....	.....	7+8 ←	21+7 ↑
218	5−5 ↑	15−6 ←	.....	4−2 ↑	11−3 ↑	18−4 ↑	.....	.....	.....	0+1 ↑	12+6 ↑	.....
219	0−7 ↑	9−8 ↑	19−9 ←	1−5 ↑	8−6 ↑	15−7 ↑	22−8 ←	.....	.....	....	3+5 ←	18+4 ←
220	4−10↑	14−11←	23−12←	5−9 ←	12−10←	19−11←	.....	.....	.....	7+0 ↑	8+3 ↑	23+2 ↑
221	8+11↑	18+10←	.....	2−12←	9+11←	16+10←	23+9 ←	.....	.....	....	14+1 ←	.....
222	3+9 ←	12+8 ↑	22+7 ←	6+8 ←	13+7 ←	20+6 ←	.....	.....	.....	15−1 ←	5+0 ←	19−1 ↑
223	7+6 ↑	16+5 ↑	.....	3+5 ←	10+4 ←	17+3 ←	.....	.....	.....	.....	10−2 ↑	.....
224	2+4 ←	11+3 ↑	21+2 ←	0+2 ←	7+1 ←	14+0 ←	21−1 ←	.....	.....	22−2 ←	1−3 ←	16−4 ←
225	6+1 ←	15+0 ↑	.....	4−2 ←	11−3 ←	18−4 ←	.....	.....	.....	.....	6−5 ↑	21−6 ↑
226	1−1 ←	10−2 ↑	19−3 ↑	1−5 ←	8−6 ←	15−7 ←	22−8 ←	.....	.....	.....	12−7 ←	.....
227	5−4 ←	14−5 ↑	.....	5−9 ←	12−10←	19−11←	.....	.....	.....	5−3 ←	3−8 ←	18−9 ←
228	0−6 ←	9−7 ←	18−8 ↑	2−12←	9+11←	16+10←	23+9 ←	.....	.....	.....	8−10↑	23−11↑
229	4−9 ←	13−10←	22−11↑	6+8 ←	13+7 ←	20+6 ←	.....	7+8 ←	7−8 ↑	12−4 ←	14−12←	.....
230	8−12←	17+11↑	.....	3+5 ←	10+4 ←	17+3 ←	.....	.....	.....	.....	5+11←	19+10↑
231	2+10↑	12+9 ←	21+8 ↑	0+2 ←	7+1 ←	14+0 ←	21−1 ←	.....	.....	19−5 ←	10+9 ↑	.....
232	7+7 ←	16+6 ←	.....	4−2 ←	11−3 ←	18−4 ←	.....	.....	.....	....	1+8 ←	16+7 ←
233	1+5 ↑	11+4 ←	20+3 ↑	1−5 ←	8−6 ←	15−7 ←	22−8 ←	.....	.....	.....	6+6 ↑	21+5 ↑
234	5+2 ↑	15+1 ←	.....	5−9 ←	12−10←	19−11←	.....	.....	.....	2−6 ↑	12+4 ←	.....
235	0+0 ↑	9−1 ↑	19−2 ←	2−12←	9+11←	15+10↑	22+9 ↑	.....	.....	.....	3+3 ←	17+2 ↑
236	4−3 ↑	14−4 ←	23−5 ←	5+8 ↑	12+7 ↑	19+6 ↑	.....	.....	.....	9−7 ↑	8+1 ↑	23+0 ←
237	8−6 ↑	18−7 ←	.....	2+5 ↑	9+4 ↑	16+3 ↑	23+2 ↑	.....	.....	.....	14−1 ←	.....
238	3−8 ↑	12−9 ↑	22−10←	6+1 ↑	13+0 ↑	20−1 ↑	... .	.....	.....	16−8 ↑	5−2 ←	19−3 ↑
239	7−11↑	17−12←	.....	3−2 ↑	10−3 ↑	17−4 ↑	.....	.....	.....	.....	10−4 ↑	.....
240	2+11←	11+10↑	21+9 ←	0−5 ↑	7−6 ↑	14−7 ↑	21−8 ↑	.....	.....	23−9 ↑	1−5 ←	16−6 ←

TABLE 42.—*Component hours derived from solar hours*—Continued.

Day of series.	Q			2Q				R	T	λ	μ or 2 MS		
241	6+8 ←	15+7 ↑	.....	4−9 ↑	11−10 ↑	18−11 ↑	.....	.....	.....	.....	6−7 ↑	21−8 ↑	
242	1+6 ←	10+5 ↑	19+4 ↑	1−12 ↑	8+11 ↑	15+10 ↑	22+9 ↑	.....	.....	.....	12−9 ←	.....	
243	5+3 ←	14+2 ↑	.....	5+8 ↑	12+7 ↑	19+6 ↑	.....	.....	.....	7−10←	3−10←	17−11 ↑	
244	0+1 ←	9+0 ←	18−1 ↑	2+5 ↑	9+4 ↑	16+3 ↑	23+2 ↑	.....	.....	.....	8−12 ↑	23+11←	
245	4−2 ←	13−3 ↑	22−4 ↑	6+1 ↑	13+0 ↑	20−1 ↑	.....	.....	.....	14−11←	14+10←	.....	
246	8−5 ←	17−6 ↑	.....	3−2 ↑	10−3 ↑	17−4 ↑	.....	.....	.....	.....	4+9 ↑	19+8 ↑	
247	2−7 ↑	12−8 ←	21−9 ↑	0−5 ↑	7−6 ↑	14−7 ↑	21−8 ↑	.....	.....	21−12←	10+7 ←	.....	
248	7−10←	16−11←	.....	4−9 ↑	11−10 ↑	18−11 ↑	.....	.....	.....	.....	1+6 ←	16+5 ←	
249	1−12 ↑	11+11←	20+10 ↑	1−12 ↑	8+11 ↑	15+10 ↑	22+9 ↑	.....	.....	.....	6+4 ↑	21+3 ↑	
250	5+9 ↑	15+8 ←	.....	5+8 ↑	12+7 ↑	19+6 ↑	.....	.....	.....	4+11←	12+2 ←	.....	
251	0+7 ↑	10+6 ←	19+5 ←	2+5 ←	9+4 ←	16+3 ←	23+2 ←	.....	.....	.....	3+1 ←	17+0 ↑	
252	4+4 ↑	14+3 ←	23+2 ↑	6+1 ←	13+0 ←	20−1 ←	.....	.....	.....	11+10←	8−1 ↑	23−2 ←	
253	8+1 ↑	18+0 ←	.....	3−2 ←	10−3 ←	17−4 ←	.....	.....	.....	.....	14−3 ←	.....	
254	3−1 ↑	12−2 ↑	22−3 ←	0−5 ←	7−6 ←	14−7 ←	21−8 ←	.....	.....	18+9 ↑	4−4 ↑	19−5 ↑	
255	7−4 ↑	17−5 ←	.....	4−9 ←	11−10←	18−11←	.....	.....	.....	.....	10−6 ←	.....	
256	2−6 ←	11−7 ↑	21−8 ←	1−12←	8+11←	15+10←	22+9 ←	.....	.....	.....	1−7 ←	15−8 ↑	
257	6−9 ↑	15−10 ↑	.....	5+8 ←	12+7 ←	19+6 ←	.....	.....	.....	1+8 ↑	6−9 ↑	21−10 ↑	
258	1−11←	10−12 ↑	20+11←	2+5 ←	9+4 ←	16+3 ←	23+2 ←	.....	.....	.....	12−11←	.....	
259	5+10←	14+9 ↑	.....	6+1 ←	13+0 ←	20−1 ←	.....	18+9 ↑	18−9 ←	8+7 ↑	3−12←	17+11 ↑	
260	0+8 ←	9+7 ←	18+6 ↑	3−2 ←	10−3 ←	17−4 ←	.....	.....	.....	.....	8+10 ↑	23+9 ←	
261	4+5 ←	13+4 ↑	22+3 ↑	0−5 ←	7−6 ←	14−7 ←	21−8 ←	.....	.....	15+6 ↑	14+8 ←	.....	
262	8+2 ←	17+1 ↑	.....	4−9 ←	11−10←	18−11←	.....	.....	.....	.....	4+7 ↑	19+6 ↑	
263	3+0 ←	12−1 ←	21−2 ↑	1−12←	8+11←	15+10←	22+9 ←	.....	.....	22+5 ↑	10+5 ←	.....	
264	7−3 ←	16−4 ↑	.....	5+8 ←	12+7 ←	19+6 ←	.....	.....	.....	.....	1+4 ←	15+3 ↑	
265	1−5 ↑	11−6 ←	20−7 ↑	2+5 ←	9+4 ←	16+3 ←	23+2 ←	.....	.....	.....	6+2 ↑	21+1 ←	
266	5−8 ↑	15−9 ←	.....	6+1 ←	13+0 ←	19−1 ↑	.....	.....	.....	6+4 ←	12+0 ←	.....	
267	0−10 ↑	10−11←	19−12←	2−2 ↑	9−3 ↑	16−4 ↑	23−5 ↑	.....	.....	.....	2−1 ↑	17−2 ↑	
268	4+11 ↑	14+10←	23+9 ↑	6−6 ↑	13−7 ↑	20−8 ↑	.....	.....	.....	13+3 ←	8−3 ↑	23−4 ←	
269	8+8 ↑	18+7 ←	.....	3−9 ↑	10−10 ↑	17−11 ↑	.....	.....	.....	.....	14−5 ←	.....	
270	3+6 ↑	13+5 ←	22+4 ←	0−12 ↑	7+11 ↑	14+10 ↑	21+9 ↑	.....	.....	20+2 ←	4−6 ↑	19−7 ↑	
271	7+3 ↑	17+2 ←	.....	4+8 ↑	11+7 ↑	18+6 ↑	.....	.....	.....	.....	10−8 ←	.....	
272	2+1 ←	11+0 ↑	21−1 ←	1+5 ↑	8+4 ↑	15+3 ↑	22+2 ↑	.....	.....	.....	1−9 ←	15−10 ↑	
273	6−2 ↑	15−3 ↑	.....	5+1 ↑	12+0 ↑	19−1 ↑	.....	.....	.....	3+1 ←	6−11 ↑	21−12←	
274	1−4 ←	10−5 ↑	20−6 ←	2−2 ↑	9−3 ↑	16−4 ↑	23−5 ↑	.....	.....	.....	12+11←	.....	
275	5−7 ←	14−8 ↑	.....	6−6 ↑	13−7 ↑	20−8 ↑	.....	.....	.....	10+0 ↑	2+10 ↑	17+9 ↑	
276	0−9 ←	9−10 ↑	18−11 ↑	3−9 ↑	10−10 ↑	17−11 ↑	.....	.....	.....	.....	8+8 ←	23+7 ←	
277	4−12←	13+11 ↑	23+10←	0−12 ↑	7+11 ↑	14+10 ↑	21+9 ↑	.....	.....	17−1 ↑	13+6 ↑	.....	
278	8+9 ←	17+8 ↑	.....	4+8 ↑	11+7 ↑	18+6 ↑	.....	.....	.....	.....	4+5 ↑	19+4 ↑	
279	3+7 ←	12+6 ←	21+5 ↑	1+5 ↑	8+4 ↑	15+3 ↑	22+2 ↑	.....	.....	.....	10+3 ←	.....	
280	7+4 ←	16+3 ↑	.....	5+1 ↑	12+0 ↑	19−1 ↑	.....	.....	.....	0−2 ↑	1+2 ←	15+1 ↑	
281	1+2 ↑	11+1 ←	20+0 ↑	2−2 ↑	9−3 ↑	16−4 ↑	23−5 ↑	.....	.....	.....	6+0 ↑	21−1 ←	
282	6−1 ←	15−2 ←	.....	6−6 ↑	13−7 ←	20−8 ←	.....	.....	.....	7−3 ↑	12−2 ←	.....	
283	0−3 ↑	10−4 ←	19−5 ↑	3−9 ←	10−10←	17−11←	.....	.....	.....	.....	2−3 ↑	17−4 ↑	
284	4−6 ↑	14−7 ←	23−8 ↑	0−12←	7+11←	14+10←	21+9 ←	.....	.....	14−4 ↑	8−5 ←	23−6 ←	
285	8−9 ↑	18−10←	.....	4+8 ←	11+7 ←	18+6 ←	.....	.....	.....	.....	13−7 ↑	.....	
286	3−11 ↑	13−12←	22+11←	1+5 ←	8+4 ←	15+3 ←	22+2 ←	.....	.....	22−5 ←	4−8 ↑	19−9 ←	
287	7+10 ↑	17+9 ←	.....	5+1 ←	12+0 ←	19−1 ←	.....	.....	.....	.....	10−10←	.....	
288	2+8 ↑	11+7 ↑	21+6 ←	2−2 ←	9−3 ←	16−4 ←	23−5 ←	.....	.....	.....	1−11←	15−12 ↑	
289	6+5 ↑	16+4 ←	.....	6−6 ←	13−7 ←	20−8 ←	.....	.....	.....	5−6 ←	6+11 ↑	21−10←	
290	1+3 ←	10+2 ↑	20+1 ←	3−9 ←	10−10←	17−11←	.....	4+10←	4−10 ↑	.....	12+9 ←	.....	
291	5+0 ←	14−1 ↑	.....	0−12←	7+11←	14+10←	21+9 ←	.....	.....	12−7 ←	2+8 ↑	17+7 ↑	
292	0−2 ←	9−3 ↑	18−4 ↑	4+8 ←	11+7 ←	18+6 ←	.....	.....	.....	.....	8+6 ←	23+5 ←	
293	4−5 ←	13−6 ↑	23−7 ←	1+5 ←	8+4 ←	15+3 ←	22+2 ←	.....	.....	19−8 ←	13+4 ↑	.....	
294	8−8 ←	17−9 ↑	.....	5+1 ←	12+0 ←	19−1 ←	.....	.....	.....	.....	4+3 ↑	19+2 ←	
295	3−10←	12−11 ↑	21−12 ↑	2−2 ←	9−3 ←	16−4 ←	23−5 ←	.....	.....	.....	10+1 ←	.....	
296	7+11←	16+10 ↑	.....	6−6 ←	13−7 ←	20−8 ←	.....	.....	.....	2−9 ↑	0+0 ↑	15−1 ↑	
297	1+9 ↑	11+8 ←	20+7 ↑	3−9 ←	10−10←	17−11←	23−12 ↑	.....	.....	.....	6−2 ←	21−3 ←	
298	6+6 ←	15+5 ←	.....	6+11 ↑	13+10 ↑	20+9 ↑	.....	.....	.....	9−10 ↑	12−4 ←	.....	
299	0+4 ↑	10+3 ←	19+2 ↑	3+8 ↑	10+7 ↑	17+6 ↑	.....	.....	.....	.....	2−5 ↑	17−6 ↑	
300	4+1 ↑	14+0 ←	23−1 ↑	0+5 ↑	7+4 ↑	14+3 ↑	21+2 ↑	.....	.....	16−11 ↑	8−7 ←	23−8 ←	
301	9−2 ←	18−3 ←	.....	4+1 ↑	11+0 ↑	18−1 ↑	.....	.....	.....	.....	13−9 ↑	.....	
302	3−4 ↑	13−5 ←	22−6 ←	1−2 ↑	8−3 ↑	15−4 ↑	22−5 ↑	.....	.....	23−12 ↑	4−10 ↑	19−11←	
303	7−7 ↑	17−8 ←	.....	5−6 ↑	12−7 ↑	19−8 ↑	.....	.....	.....	.....	10−12←	.....	
304	2−9 ↑	11−10 ↑	21−11←	2−9 ↑	9−10 ↑	16−11 ↑	23−12 ↑	.....	.....	.....	0+11 ↑	15+10 ↑	
305	6−12 ↑	16+11←	.....	6+11 ↑	13+10 ↑	20+9 ↑	.....	.....	.....	6+11 ↑	6+9 ←	21+8 ←	
306	1+10←	10+9 ↑	20+8 ←	3+8 ↑	10+7 ↑	17+6 ↑	.....	.....	.....	.....	11+7 ↑	.....	
307	5+7 ↑	14+6 ↑	....	0+5 ↑	7+4 ↑	14+3 ↑	21+2 ↑	.....	.....	14+10←	2+6 ↑	17+5 ←	
308	0+5 ←	9+4 ↑	19+3 ←	4+1 ↑	11+0 ↑	18−1 ↑	.....	.....	.....	.....	8+4 ←	23+3 ←	
309	4+2 ←	13+1 ↑	23+0 ←	1−2 ↑	8−3 ↑	15−4 ↑	22−5 ↑	.....	.....	21+9 ←	13+2 ↑	.....	
310	8−1 ←	17−2 ↑	.....	5−6 ↑	12−7 ↑	19−8 ↑	.....	.....	.....	.....	4+1 ↑	19+0 ←	
311	3−3 ←	12−4 ↑	21−5 ↑	2−9 ↑	9−10 ↑	16−11 ↑	23−12 ↑	.....	.....	.....	10−1 ←	.....	
312	7−6 ←	16−7 ↑	.....	6+11 ↑	13+10 ↑	20+9 ↑	.....	.....	.....	4+8 ←	0−2 ↑	15−3 ↑	
313	2−8 ←	11−9 ←	20−10 ↑	3+8 ↑	10+7 ↑	17+6 ↑	.....	.....	.....	.....	6−4 ←	21−5 ←	
314	6−11←	15−12 ↑	.....	0+5 ←	7+4 ←	14+3 ←	21+2 ←	.....	.....	11+7 ←	11−6 ↑	.....	
315	0+11 ↑	10+10←	19+9 ↑	4+1 ←	11+0 ←	18−1 ←	.....	.....	.....	.....	2−7 ↑	17−8 ←	
316	4+8 ↑	14+7 ←	23+6 ↑	1−2 ←	8−3 ←	15−4 ←	22−5 ←	.....	.....	18+6 ↑	8−9 ←	22−10 ↑	
317	9+5 ←	18+4 ←	.....	5−6 ←	12−7 ←	19−8 ←	.....	.....	.....	.....	13−11 ↑	.....	
318	3+3 ↑	13+2 ←	22+1 ↑	2−9 ←	9−10←	16−11←	23−12←	.....	.....	.....	4−12 ↑	19+11←	
319	7+0 ↑	17−1 ←	.....	6+11←	13+10←	20+9 ←	.....	.....	.....	1+5 ↑	10+10←	.....	
320	2−2 ↑	12−3 ←	21−4 ←	3+8 ←	10+7 ←	17+6 ←	.....	15+11 ↑	15−11←	.....	0+9 ↑	15+8 ↑	

TABLE 42.—*Component hours derived from solar hours*—Continued.

Day of series	Q			2Q				R	T	λ	μ or 2MS		
321	6−5 ↑	16−6 ←	.....	0+5 ←	7+4 ←	14+3 ←	21+2 ←	.....	.....	8+4 ↑	6+7 ←	21+6 ←	
322	1−7 ←	10−8 ↑	20−9 ←	4+1 ←	11+0 ←	18−1 ←	.....	.....	.....	.....	11+5 ↑	.....	
323	5−10 ↑	14−11 ↑	.....	1−2 ←	8−3 ←	15−4 ←	22−5 ←	.....	.....	15+3 ↑	2+4 ↑	17+3 ←	
324	0−12 ←	9+11 ↑	19+10 ←	5−6 ←	12−7 ←	19−8 ←	.....	.....	.....	.....	8+2 ←	22+1 ↑	
325	4+9 ←	13+8 ↑	23+7 ←	2−9 ←	9−10 ←	16−11 ←	23−12 ←	.....	.....	22+2 ↑	13+0 ↑	.....	
326	8+6 ↑	17+5 ↑	.....	6+11 ←	13+10 ←	20+9 ←	.....	.....	.....	.....	4−1 ←	19−2 ←	
327	3+4 ←	12+3 ↑	21+2 ↑	3+8 ←	10+7 ←	17+6 ←	.....	.....	.....	.....	9−3 ↑	.....	
328	7+1 ←	16+0 ↑	.....	0+5 ←	7+4 ←	14+3 ←	21+2 ←	.....	.....	6+1 ←	0−4 ↑	15−5 ↑	
329	2−1 ←	11−2 ←	20−3 ↑	4+1 ←	10+0 ↑	17−1 ↑	.....	.....	.....	.....	6−6 ←	21−7 ←	
330	6−4 ←	15−5 ↑	.....	0−2 ↑	7−3 ↑	14−4 ↑	21−5 ↑	.....	.....	13+0 ←	11−8 ↑	.....	
331	0−6 ↑	10−7 ←	19−8 ↑	4−6 ↑	11−7 ↑	18−8 ↑	.....	.....	.....	.....	2−9 ↑	17−10 ←	
332	5−9 ←	14−10 ←	23−11 ↑	1−9 ↑	8−10 ↑	15−11 ↑	22−12 ↑	.....	.....	20−1 ←	8−11 ←	22−12 ↑	
333	9−12 ←	18+11 ↑	.....	5+11 ↑	12+10 ↑	19+9 ↑	.....	.....	.....	.....	13+11 ↑	.....	
334	3+10 ↑	13+9 ←	22+8 ↑	2+8 ↑	9+7 ↑	16+6 ↑	23+5 ↑	.....	.....	.....	4+10 ←	19+9 ←	
335	7+7 ↑	17+6 ←	.....	6+4 ↑	13+3 ↑	20+2 ↑	.....	.....	.....	3−2 ←	9+8 ↑	.....	
336	2+5 ↑	12+4 ←	21+3 ←	3+1 ↑	10+0 ↑	17−1 ↑	.....	.....	.....	.....	0+7 ↑	15+6 ←	
337	6+2 ↑	16+1 ←	.....	0−2 ↑	7−3 ↑	14−4 ↑	21−5 ↑	.....	.....	10−3 ←	6+5 ←	20+4 ↑	
338	1+0 ↑	10−1 ↑	20−2 ←	4−6 ↑	11−7 ↑	18−8 ↑	.....	.....	.....	.....	11+3 ↑	.....	
339	5−3 ↑	15−4 ←	.....	1−9 ↑	8−10 ↑	15−11 ↑	22−12 ↑	.....	.....	17−4 ↑	2+2 ↑	17+1 ←	
340	0−5 ←	9−6 ↑	19−7 ←	5+11 ↑	12+10 ↑	19+9 ↑	.....	.....	.....	.....	8+0 ←	22−1 ↑	
341	4−8 ←	13−9 ↑	23−10 ←	2+8 ↑	9+7 ↑	16+6 ↑	23+5 ↑	.....	.....	.....	13−2 ↑	.....	
342	8−11 ↑	17−12 ↑	.....	6+4 ↑	13+3 ↑	20+2 ↑	.....	.....	.....	0−5 ↑	4−3 ←	19−4 ←	
343	3+11 ←	12+10 ↑	22+9 ←	3+1 ↑	10+0 ↑	17−1 ↑	.....	.....	.....	.....	9−5 ↑	.....	
344	7+8 ←	16+7 ↑	.....	0−2 ↑	7−3 ↑	14−4 ↑	21−5 ←	.....	.....	7−6 ↑	0−6 ↑	15−7 ←	
345	2+6 ←	11+5 ↑	20+4 ↑	4−6 ←	11−7 ←	18−8 ←	.....	.....	.....	.....	6−8 ←	20−9 ↑	
346	6+3 ←	15+2 ↑	.....	1−9 ←	8−10 ←	15−11 ←	22−12 ←	.....	.....	14−7 ↑	11−10 ↑	.....	
347	0+1 ↑	10+0 ←	19−1 ↑	5+11 ←	12+10 ←	19+9 ←	.....	.....	.....	.....	2−11 ←	17−12 ←	
348	5−2 ←	14−3 ←	23−4 ↑	2+8 ←	9+7 ←	16+6 ←	23+5 ←	.....	.....	22−8 ←	8+11 ←	22+10 ↑	
349	9−5 ←	18−6 ↑	.....	6+4 ←	13+3 ←	20+2 ←	.....	.....	.....	.....	13+9 ↑	.....	
350	3−7 ↑	13−8 ←	22−9 ↑	3+1 ←	10+0 ←	17−1 ←	.....	.....	.....	.....	4+8 ←	19+7 ←	
351	8−10 ←	17−11 ←	.....	0−2 ←	7−3 ←	14−4 ←	21−5 ←	1+12 ←	1−12 ↑	5−9 ←	9+6 ↑	.....	
352	2−12 ↑	12+11 ←	21+10 ←	4−6 ←	11−7 ←	18−8 ←	.....	.....	.....	.....	0+5 ↑	15+4 ←	
353	6+9 ↑	16+8 ←	.....	1−9 ←	8−10 ←	15−11 ←	22−12 ←	.....	.....	12−10 ←	6+3 ←	20+2 ↑	
354	1+7 ↑	10+6 ↑	20+5 ←	5+11 ←	12+10 ←	19+9 ←	.....	.....	.....	.....	11+1 ↑	.....	
355	5+4 ↑	15+3 ←	.....	2+8 ←	9+7 ←	16+6 ←	23+5 ←	.....	.....	19−11 ←	2+0 ←	17−1 ←	
356	0+2 ←	9+1 ↑	19+0 ←	6+4 ←	13+3 ←	20+2 ←	.....	.....	.....	.....	7−2 ↑	22−3 ↑	
357	4−1 ↑	13−2 ↑	23−3 ←	3+1 ←	10+0 ←	17−1 ←	.....	.....	.....	.....	13−4 ←	.....	
358	8−4 ↑	18−5 ←	.....	0−2 ←	7−3 ←	14−4 ←	21−5 ←	.....	.....	2−12 ←	4−5 ←	19−6 ←	
359	3−6 ←	12−7 ↑	22−8 ←	4−6 ←	11−7 ←	18−8 ←	.....	.....	.....	.....	9−7 ↑	.....	
360	7−9 ←	16−10 ↑	.....	1−9 ←	8−10 ←	14−11 ↑	21−12 ↑	.....	.....	9+11 ↑	0−8 ↑	15−9 ←	
361	2−11 ←	11−12 ↑	20+11 ↑	4+11 ↑	11+10 ↑	18+9 ↑	.....	.....	.....	.....	6−10 ←	20−11 ↑	
362	6+10 ←	15+9 ↑	.....	1+8 ↑	8+7 ↑	15+6 ↑	22+5 ↑	.....	.....	16+10 ↑	11−12 ↑	.....	
363	1+8 ←	10+7 ←	19+6 ↑	5+4 ↑	12+3 ↑	19+2 ↑	.....	.....	.....	.....	2+11 ←	17+10 ←	
364	5+5 ←	14+4 ↑	23+3 ↑	2+1 ↑	9+0 ↑	16−1 ↑	23−2 ↑	.....	.....	23+9 ↑	7+9 ↑	22+8 ↑	
365	9+2 ←	18+1 ↑	.....	6−3 ↑	13−4 ↑	20−5 ↑	.....	.....	.....	.....	13+7 ←	.....	
366	3+0 ↑	13−1 ←	22−2 ↑	3−6 ↑	10−7 ↑	17−8 ↑	.....	.....	.....	.....	4+6 ←	18+5 ↑	
367	8−3 ←	17−4 ←	.....	0−9 ↑	7−10 ↑	14−11 ↑	21−12 ↑	.....	.....	6+8 ↑	9+4 ↑	.....	
368	2−5 ↑	12−6 ←	21−7 ↑	4+11 ↑	11+10 ↑	18+9 ↑	.....	.....	.....	.....	0+3 ←	15+2 ←	
369	6−8 ↑	16−9 ←	.....	1+8 ↑	8+7 ↑	15+6 ↑	22+5 ↑	.....	.....	14+7 ←	6+1 ←	20+0 ↑	
370	1−10 ↑	11−11 ←	20−12 ←	5+4 ↑	12+3 ↑	19+2 ↑	.....	.....	.....	.....	11−1 ↑	.....	
371	5+11 ↑	15+10 ←	.....	2+1 ↑	9+0 ↑	16−1 ↑	23−2 ↑	.....	.....	21+6 ←	2−2 ←	17−3 ←	

TABLE 42.—*Component hours derived from solar hours*—Continued.

Day of series.	ν	ρ	MK	2MK	MN	MS	2SM
1	11−1 ←	5−1 ↑ 15−2 ↑	.....	11−1 ↑	12−1 ↑	.....	15+1 ←
2	7−2 ←	1−3 ↑ 11−4 ← 21−5 ←	0−1 ←	9−2 ↑	11−2 ↑	6−1 ↑	21+2 ↑
3	3−3 ← 23−4 ↑	6−6 ↑ 16−7 ↑	22−2 ←	7−3 ←	11−3 ←	.....	.....
4	19−5 ↑	2−8 ↑ 12−9 ← 22−10←	.....	4−4 ↑	10−4 ↑	17−2 ↑	2+3 ←
5	15−6 ↑	8−11← 17−12↑	20−3 ←	2−5 ↑	9−5 ↑	.....	8+4 ↑
6	12−7 ←	3+11↑ 13+10← 23+9 ←	.....	0−6 ← 22−7 ←	9−6 ←	.....	13+5 ←
7	8−8 ←	9+8 ← 18+7 ↑	18−4 ↑	19−8 ↑	8−7 ←	4−3 ↑	19+6 ↑
8	4−9 ←	4+6 ↑ 14+5 ↑	.....	17−9 ↑	7−8 ↑	.....	.....
9	0−10↑ 20−11↑	0+4 ← 10+3 ← 19+2 ↑	16−5 ↑	15−10←	6−9 ↑	15−4 ↑	0+7 ←
10	16−12↑	5+1 ↑ 15+0 ↑	.....	12−11↑	6−10←	.....	6+8 ↑
11	13+11←	1−1 ← 11−2 ← 21−3 ←	14−6 ↑	10−12↑	5−11↑	.....	12+9 ↑
12	9+10←	6−4 ↑ 16−5 ↑	.....	8+11←	4−12↑	2−5 ↑	17+10←
13	5+9 ←	2−6 ↑ 12−7 ← 22−8 ←	13−7 ←	6+10←	4+11←	.....	23+11↑
14	1+8 ↑ 21+7 ↑	7−9 ↑ 17−10↑	.....	3+9 ↑	3+10←	13−6 ↑	.....
15	17+6 ↑	3−11↑ 13−12← 23+11←	11−8 ←	1+8 ← 23+7 ←	2+9 ↑	.....	4+12←
16	14+5 ←	9+10← 18+9 ↑	.....	20+6 ↑	2+8 ←	.....	10−11↑
17	10+4 ←	4+8 ↑ 14+7 ←	9−9 ←	18+5 ↑	1+7 ←	0−7 ↑	15−10←
18	6+3 ←	0+6 ← 10+5 ← 19+4 ↑	.....	16+4 ←	0+6 ↑ 23+5 ↑	.....	21−9 ↑
19	2+2 ↑ 22+1 ↑	5+3 ↑ 15+2 ↑	7−10↑	14+3 ←	23+4 ←	11−8 ↑	.....
20	18+0 ↑	1+1 ← 11+0 ← 20−1 ↑	.....	11+2 ↑	22+3 ←	.....	2−8 ←
21	15−1 ←	6−2 ↑ 16−3 ↑	5−11↑	9+1 ←	21+2 ↑	23−9 ←	8−7 ↑
22	11−2 ←	2−4 ← 12−5 ← 22−6 ←	.....	7+0 ←	21+1 ←	.....	13−6 ←
23	7−3 ←	7−7 ↑ 17−8 ↑	3−12↑	4−1 ↑	20+0 ←	.....	19−5 ↑
24	3−4 ↑ 23−5 ↑	3−9 ← 13−10← 23−11←	.....	2−2 ↑	19−1 ↑	10−10←	.....
25	19−6 ↑	8−12↑ 18+11↑	2+11←	0−3 ← 22−4 ←	18−2 ↑	.....	0−4 ←
26	16−7 ←	4+10↑ 14+9 ←	.....	19−5 ↑	18−3 ←	21−11←	6−3 ↑
27	12−8 ←	0+8 ← 9+7 ↑ 19+6 ↑	0+10←	17−6 ←	17−4 ←	.....	11−2 ←
28	8−9 ←	5+5 ↑ 15+4 ←	22+9 ←	15−7 ←	16−5 ↑	8−12←	17−1 ↑
29	4−10↑	1+3 ← 11+2 ← 20+1 ↑	.....	12−8 ↑	16−6 ←	.....	22−0 ←
30	0−11↑ 21−12←	6+0 ↑ 16−1 ←	20+8 ↑	10−9 ↑	15−7 ←	.....	.....
31	17+11←	2−2 ← 12−3 ← 21−4 ↑	.....	8−10←	14−8 ↑	19+11←	4+1 ↑
32	13+10←	7−5 ↑ 17−6 ↑	18+7 ↑	5−11↑	13−9 ↑	.....	10+2 ↑
33	9+9 ↑	3−7 ← 13−8 ← 22−9 ↑	.....	3−12↑	13−10←	.....	15+3 ←
34	5+8 ↑	8−10↑ 18−11↑	16+6 ↑	1+11← 23+10←	12−11↑	6+10←	21+4 ↑
35	1+7 ↑ 22+6 ←	4−12← 14+11←	.....	20+9 ↑	11−12↑	.....	.....
36	18+5 ←	0+10← 9+9 ↑ 19+8 ↑	14+5 ↑	18+8 ↑	11+11←	17+9 ←	2+5 ←
37	14+4 ←	5+7 ↑ 15+6 ←	.....	16+7 ←	10+10←	.....	8+6 ↑
38	10+3 ↑	1+5 ← 10+4 ↑ 20+3 ↑	13+4 ←	13+6 ↑	9+9 ↑	.....	13+7 ←
39	6+2 ↑	6+2 ↑ 16+1 ←	.....	11+5 ↑	8+8 ↑	4+8 ←	19+8 ↑
40	2+1 ↑ 23+0 ←	2+0 ← 12−1 ← 21−2 ↑	11+3 ←	9+4 ←	8+7 ←	.....	.....
41	19−1 ←	7−3 ↑ 17−4 ←	.....	7+3 ←	7+6 ↑	15+7 ↑	0+9 ←
42	15−2 ←	3−5 ← 13−6 ← 22−7 ↑	9+2 ←	4+2 ↑	6+5 ↑	.....	6+10↑
43	11−3 ↑	8−8 ↑ 18−9 ↑	.....	2+1 ←	6+4 ←	.....	11+11←
44	7−4 ↑	4−10← 14−11← 23−12↑	7+1 ↑	0+0 ← 21−1 ↑	5+3 ←	2+6 ↑	17+12↑
45	3−5 ↑	9+11↑ 19+10↑	.....	19−2 ↑	4+2 ↑	.....	22−11←
46	0−6 ← 20−7 ←	5+9 ← 15+8 ←	5+0 ↑	17−3 ←	4+1 ←	13+5 ↑	.....
47	16−8 ←	1+7 ← 10+6 ↑ 20+5 ↑	.....	15−4 ←	3+0 ←	.....	4−10↑
48	12−9 ↑	6+4 ← 16+3 ←	3−1 ↑	12−5 ↑	2−1 ↑	.....	9−9 ←
49	8−10↑	2+2 ← 11+1 ↑ 21+0 ↑	.....	10−6 ←	1−2 ↑	0+4 ↑	15−8 ↑
50	4−11↑	7−1 ↑ 17−2 ←	2−2 ←	8−7 ←	1−3 ←	.....	20−7 ←
51	1−12← 21+11←	3−3 ← 12−4 ↑ 22−5 ↑	.....	5−8 ↑	0−4 ← 23−5 ↑	11+3 ↑	.....
52	17+10←	8−6 ↑ 18−7 ←	0−3 ←	3−9 ↑	23−6 ←	.....	2−6 ←
53	13+9 ↑	4−8 ← 14−9 ← 23−10↑	22−4 ←	1−10← 22−11↑	22−7 ←	22+2 ↑	8−5 ↑
54	9+8 ↑	9−11↑ 19−12←	.....	20−12↑	21−8 ↑	.....	13−4 ←
55	5+7 ↑	5+11← 15+10←	20−5 ↑	18+11←	20−9 ↑	.....	19−3 ↑
56	2+6 ← 22+5 ←	0+9 ↑ 10+8 ↑ 20+7 ↑	.....	16+10←	20−10←	9+1 ↑	.....
57	18+4 ←	6+6 ← 16+5 ←	18−6 ↑	13+9 ↑	19−11←	.....	0−2 ←
58	14+3 ↑	2+4 ← 11+3 ↑ 21+2 ↑	.....	11+8 ↑	18−12↑	20+0 ↑	6−1 ↑
59	10+2 ↑	7+1 ← 17+0 ←	16−7 ↑	9+7 ←	18+11←	.....	11−0 ←
60	6+1 ↑	3−1 ← 12−2 ↑ 22−3 ↑	.....	6+6 ↑	17+10←	.....	17+1 ↑
61	3+0 ← 23−1 ←	8−4 ↑ 18−5 ←	15−8 ←	4+5 ↑	16+9 ↑	7−1 ↑	22+2 ←
62	19−2 ←	4−6 ← 13−7 ↑ 23−8 ↑	.....	2+4 ←	15+8 ↑	.....	.....
63	15−3 ↑	9−9 ↑ 19−10←	13−9 ←	0+3 ← 21+2 ↑	15+7 ↑	19−2 ←	4+3 ↑
64	11−4 ↑	5−11← 15−12←	.....	19+1 ←	14+6 ↑	.....	9+4 ←
65	7−5 ↑	0+11↑ 10+10↑ 20+9 ←	11−10←	17+0 ←	13+5 ↑	.....	15+5 ↑
66	4−6 ←	6+8 ← 16+7 ←	.....	14−1 ↑	13+4 ←	6−3 ←	20+6 ←
67	0−7 ← 20−8 ←	1+6 ↑ 11+5 ↑ 21+4 ↑	9−11↑	12−2 ↑	12+3 ←	.....	.....
68	16−9 ↑	7+3 ← 17+2 ←	.....	10−3 ←	11+2 ↑	17−4 ←	2+7 ↑
69	12−10↑	2+1 ↑ 12+0 ↑ 22−1 ↑	7−12↑	8−4 ←	10+1 ↑	.....	7+8 ←
70	8−11↑	8−2 ← 18−3 ←	.....	5−5 ↑	10+0 ←	.....	13+9 ↑
71	5−12←	4−4 ← 13−5 ↑ 23−6 ↑	5+11↑	3−6 ←	9−1 ↑	4−5 ←	19+10↑
72	1+11← 21+10←	9−7 ← 19−8 ←	.....	1−7 ← 22−8 ↑	8−2 ↑	.....	.....
73	17+9 ↑	5−9 ← 14−10↑	4+10←	20−9 ↑	8−3 ←	15−6 ←	0+11←
74	13+8 ↑	0−11↑ 10−12↑ 20+11←	.....	18−10←	7−4 ←	.....	6+12↑
75	9+7 ↑	6+10← 15+9 ↑	2+9 ←	16−11←	6−5 ↑	.....	11−11←
76	6+6 ←	1+8 ↑ 11+7 ↑ 21+6 ←	.....	13−12↑	6−6 ←	2−7 ←	17−10↑
77	2+5 ← 22+4 ←	7+5 ← 17+4 ←	0+8 ←	11+11←	5−7 ←	.....	22−9 ←
78	18+3 ↑	2+3 ↑ 12+2 ↑ 22+1 ←	22+7 ↑	9+10←	4−8 ↑	13−8 ←	.....
79	14+2 ↑	8+0 ← 18−1 ←	.....	6+9 ↑	3−9 ↑	.....	4−8 ↑
80	10+1 ↑	3−2 ↑ 13−3 ↑ 23−4 ↑	20+6 ↑	4+8 ↑	3−10←	.....	9−7 ←

TABLE 42.—*Component hours derived from solar hours*—Continued.

Day of series.	ν	ρ	MK	2MK	MN	MS	2SM
81	7+0 ←	9−5 ← 19−6 ←	.....	2+7 ← 23+6 ↑	2−11←	0−9 ←	15−6 ↑
82	3−1 ← 23−2 ←	5−7 ← 14−8 ↑	18+5 ↑	21+5 ↑	1−12↑	.....	20−5 ←
83	19−3 ↑	0−9 ↑ 10−10← 20−11←	.....	19+4 ←	1+11←	11−10↑	.....
84	15−4 ↑	6−12← 15+11↑	17+4 ←	17+3 ←	0+10← 23+9 ↑	.....	2−4 ↑
85	12−5 ←	1+10↑ 11+9 ↑ 21+8 ←	.....	14+2 ↑	22+8 ↑	22−11↑	7−3 ←
86	8−6 ←	7+7 ← 16+6 ↑	15+3 ←	12+1 ↑	22+7 ←	.....	13−2 ↑
87	4−7 ←	2+5 ↑ 12+4 ↑ 22+3 ←	.....	10+0 ←	21+6 ←	.....	18−1 ←
88	0−8 ↑ 20−9 ↑	8+2 ← 18+1 ←	13+2 ←	7−1 ↑	20+5 ↑	9−12↑	.....
89	16−10↑	3+0 ↑ 13−1 ↑ 23−2 ←	.....	5−2 ↑	20+4 ←	.....	0−0 ↑
90	13−11←	9−3 ← 19−4 ←	11+1 ↑	3−3 ←	19+3 ←	20+11↑	5−1 ←
91	9−12←	4−5 ↑ 14−6 ↑	.....	1−4 ← 22−5 ↑	18+2 ↑	.....	11+2 ↑
92	5+11←	0−7 ↑ 10−8 ← 20−9 ←	9+0 ↑	20−6 ←	17+1 →	.....	17+3 ↑
93	1+10↑ 21+9 ↑	5−10↑ 15−11↑	.....	18−7 ←	17+0 ←	7+10↑	22+4 ←
94	17+8 ↑	1−12↑ 11+11← 21+10←	7−1 ↑	15−8 ↑	16−1 ↑	.....	.....
95	14+7 ←	7+9 ← 16+8 ↑	.....	13−9 ↑	15−2 ↑	18+9 ↑	4+5 ↑
96	10+6 ←	2+7 ↑ 12+6 ← 22+5 ←	6−2 ←	11−10←	15−3 ←	.....	9+6 ←
97	6+5 ←	8+4 ← 17+3 ↑	.....	9−11←	14−4 ←	.....	15+7 ↑
98	2+4 ↑ 22+3 ↑	3+2 ↑ 13+1 ↑ 23+0 ←	4−3 ←	6−12↑	13−5 ↑	5+8 ↑	20+8 ←
99	18+2 ↑	9−1 ← 18−2 ↑	.....	4+11←	12−6 ↑	.....	.....
100	15+1 ←	4−3 ↑ 14−4 ↑	2−4 ←	2+10← 23+9 ↑	12−7 ←	16+7 ↑	2+9 ↑
101	11+0 ←	0−5 ← 10−6 ← 20−7 ←	.....	21+8 ↑	11−8 ↑	.....	7+10←
102	7−1 ←	5−8 ↑ 15−9 ↑	0−5 ↑	19+7 ←	10−9 ↑	.....	13+11↑
103	3−2 ↑ 23−3 ↑	1−10↑ 11−11← 21−12←	22−6 ↑	16+6 ↑	10−10←	4+6 ←	18+12←
104	19−4 ↑	6+11↑ 16+10↑	.....	14+5 ↑	9−11←	.....	.....
105	16−5 ←	2+9 ↑ 12+8 ← 22+7 ←	20−7 ↑	12+4 ←	8−12↑	15+5 ←	0−11↑
106	12−6 ←	8+6 ← 17+5 ↑	.....	10+3 ←	8+11←	.....	5−10←
107	8−7 ←	3+4 ↑ 13+3 ← 23+2 ←	18−8 ↑	7+2 ↑	7+10←	.....	11−9 ↑
108	4−8 ↑	9+1 ← 18+0 ↑	.....	5+1 ↑	6+9 ↑	2+4 ←	16−8 ←
109	0−9 ↑ 20−10↑	4−1 ↑ 14−2 ↑	17−9 ←	3+0 ←	5+8 ↑	.....	22−7 ↑
110	17−11←	0−3 ← 10−4 ← 19−5 ↑	.....	0−1 ↑ 22−2 ↑	5+7 ←	13+3 ←	.....
111	13−12←	5−6 ↑ 15−7 ↑	15−10←	20−3 ←	4+6 ←	.....	3−6 ←
112	9+11←	1−8 ← 11−9 ← 21−10←	.....	18−4 ←	3+5 ↑	.....	9−5 ←
113	5+10↑	6−11↑ 16−12↑	13−11←	15−5 ↑	3+4 ←	0+2 ←	15−4 ↑
114	1+9 ↑ 21+8 ↑	2+11← 12+10← 22+9 ←	.....	13−6 ←	2+3 ←	.....	20−3 ←
115	18+7 ←	7+8 ↑ 17+7 ↑	11−12↑	11−7 ←	1+2 ↑	11+1 ←	.....
116	14+6 ←	3+6 ↑ 13+5 ← 23+4 ←	.....	8−8 ↑	0+1 ↑	....	2−2 ↑
117	10+5 ←	8+3 ↑ 18+2 ↑	9+11↑	6−9 ↑	0+0 ← 23−1 ←	22+0 ←	7−1 ←
118	6+4 ↑	4+1 ↑ 14+0 ←	.....	4−10←	22−2 ↑	.....	13−0 ↑
119	2+3 ↑ 22+2 ↑	0−1 ← 10−2 ← 19−3 ↑	7+10↑	2−11← 23−12↑	22−3 ←	.....	18+1 ←
120	19+1 ←	5−4 ↑ 15−5 ←	.....	21+11←	21−4 ←	9−1 ←	.....
121	15+0 ←	1−6 ← 11−7 ← 20−8 ↑	6+9 ←	19+10←	20−5 ↑	.....	0+2 ↑
122	11−1 ←	6−9 ↑ 16−10↑	.....	16+9 ↑	19−6 ↑	20−2 ↑	5+3 ←
123	7−2 ↑	2−11← 12−12← 21+11↑	4+8 ←	14+8 ↑	19−7 ←	.....	11+4 ↑
124	3−3 ↑ 23−4 ↑	7+10↑ 17+9 ↑	.....	12+7 ←	18−8 ↑	.....	16+5 ←
125	20−5 ←	3+8 ← 13+7 ← 23+6 ←	2+7 ←	10+6 ←	17−9 ↑	7−3 ↑	22+6 ↑
126	16−6 ←	8+5 ↑ 18+4 ↑	.....	7+5 ↑	17−10←	.....	.....
127	12−7 ←	4+3 ↑ 14+2 ←	0+6 ↑	5+4 ←	16−11←	18−4 ↑	3+7 ←
128	8−8 ↑	0+1 ← 9+0 ↑ 19−1 ↑	22+5 ↑	3+3 ←	15−12↑	.....	9+8 ↑
129	4−9 ↑	5−2 ↑ 15−3 ←	.....	0+2 ↑ 22+1 ↑	14+11↑	.....	14+9 ←
130	0−10↑ 21−11←	1−4 ← 11−5 ← 20−6 ↑	20+4 ↑	20+0 ←	14+10←	5−5 ↑	20+10↑
131	17−12←	6−7 ↑ 16−8 ←	.....	17−1 ↑	13+9 ↑	.....	.....
132	13+11←	2−9 ← 12−10← 21−11↑	19+3 ←	15−2 ↑	12+8 ↑	16−6 ↑	2+11↑
133	9+10↑	7−12↑ 17+11↑	.....	13−3 ←	12+7 ←	.....	7+12←
134	5+9 ↑	3+10← 13+9 ← 22+8 ↑	17+2 ←	11−4 ←	11+6 ←	.....	13−11↑
135	1+8 ↑ 22+7 ←	8+7 ↑ 18+6 ↑	.....	8−5 ↑	10+5 ↑	3−7 ↑	18−10←
136	18+6 ←	4+5 ← 14+4 ←	15+1 ←	6−6 ↑	10+4 ←	....	....
137	14+5 ←	0+3 ← 9+2 ↑ 19+1 ↑	.....	4−7 ←	9+3 ←	14−8 ↑	0−9 ↑
138	10+4 ↑	5+0 ← 15−1 ←	13+0 ↑	1−8 ↑ 23−9 ↑	8+2 ↑	.....	5−8 ←
139	6+3 ↑	1−2 ← 10−3 ↑ 20−4 ↑	.....	21−10←	7+1 ↑	.....	11−7 ↑
140	3+2 ← 23+1 ←	6−5 ↑ 16−6 ←	11−1 ↑	19−11←	7+0 ←	1−9 ↑	16−6 ←
141	19+0 ←	2−7 ← 11−8 ↑ 21−9 ↑	.....	16−12↑	6−1 ←	.....	22−5 ↑
142	15−1 ↑	7−10↑ 17−11←	9−2 ↑	14+11←	5−2 ↑	13−10←	.....
143	11−2 ↑	3−12← 13+11← 22+10↑	.....	12+10←	5−3 ←	.....	3−4 ←
144	7−3 ↑	8+9 ↑ 18+8 ←	8−3 ←	9+9 ↑	4−4 ←	.....	9−3 ↑
145	4−4 ←	4+7 ← 14+6 ← 23+5 ↑	.....	7+8 ↑	3−5 ↑	0−11←	14−2 ←
146	0−5 ← 20−6 ←	9+4 ↑ 19+3 ↑	6−4 ←	5+7 ←	2−6 ↑	.....	20−1 ↑
147	16−7 ↑	5+2 ← 15+1 ←	.....	3+6 ←	2−7 ←	11−12←	.....
148	12−8 ↑	1+0 ← 10−1 ↑ 20−2 ↑	4−5 ←	0+5 ↑ 22+4 ←	1−8 ←	.....	1−0 ←
149	8−9 ↑	6−3 ← 16−4 ←	.....	20+3 ←	0−9 ↑	22+11←	7+1 ↑
150	5−10←	2−5 ← 11−6 ↑ 21−7 ↑	2−6 ↑	17+2 ↑	0−10← 23−11←	.....	12+2 ←
151	1−11← 21−12←	7−8 ↑ 17−9 ←	.....	15+1 ↑	22−12↑	.....	18+3 ↑
152	17+11↑	3−10← 12−11↑ 22−12↑	0−7 ↑	13+0 ←	21+11↑	9+10←	.....
153	13+10↑	8+11↑ 18+10←	22−8 ↑	10−1 ↑	21+10←	.....	0+4 ↑
154	9+9 ↑	4+9 ← 14+8 ← 23+7 ↑	.....	8−2 ↑	20+9 ↑	20+9 ←	5+5 ←
155	6+8 ←	9+6 ↑ 19+5 ←	21−9 ←	6−3 ←	19+8 ↑	.....	11+6 ↑
156	2+7 ← 22+6 ←	5+4 ← 15+3 ←	....	4−4 ←	19+7 ←	.....	16+7 ←
157	18+5 ↑	0+2 ↑ 10+1 ↑ 20+0 ↑	19−10←	1−5 ↑ 23−6 ↑	18+6 ←	7+8 ←	22+8 ↑
158	14+4 ↑	6−1 ← 16−2 ←	.....	21−7 ←	17+5 ↑	.....	.....
159	10+3 ↑	1−3 ↑ 11−4 ↑ 21−5 ↑	17−11←	18−8 ↑	16+4 ↑	18+7 ←	3+9 ←
160	7+2 ←	7−6 ← 17−7 ←	.....	16−9 ↑	16+3 ←	.....	9+10↑

TABLE 42.—*Component hours derived from solar hours*—Continued.

Day of series	ν	ρ	MK	2 M K	M N	MS	2 S M
161	3+1 ← 23+0 ←	3−8 ← 12−9 ↑ 22−10↑	15−12↑	14−10←	15+2 ↑	.....	14+11←
162	19−1 ↑	8−11← 18−12←	.....	12−11←	14+1 ↑	5+6 ↑	20+12↑
163	15−2 ↑	4+11← 13+10↑ 23+9 ↑	13+11↑	9−12↑	14+0 ←	.....	.....
164	11−3 ↑	9+8 ↑ 19+7 ←	.....	7+11←	13−1 ←	16+5 ↑	1−11←
165	8−4 ←	5+6 ← 14+5 ↑	11+10↑	5+10←	12−2 ↑	.....	7−10↑
166	4−5 ←	0+4 ↑ 10+3 ↑ 20+2 ←	.....	2+9 ↑	12−3 ←	.....	12−9 ←
167	0−6 ← 20−7 ↑	6+1 ← 16+0 ←	10+9 ←	0+8 ↑ 22+7 ←	11−4 ←	3+4 ↑	18−8 ↑
168	16−8 ↑	1−1 ↑ 11−2 ↑ 21−3 ←	.....	20+6 ←	10−5 ↑	.....	23−7 ←
169	12−9 ↑	7−4 ← 17−5 ←	8+8 ←	17+5 ↑	9−6 ↑	14+3 ↑	.....
170	9−10←	2−6 ↑ 12−7 ↑ 22−8 ↑	.....	15+4 ←	9−7 ←	.....	5−6 ↑
171	5−11←	8−9 ← 18−10←	6+7 ←	13+3 ←	8−8 ←	.....	10−5 ←
172	1−12← 21+11↑	4−11← 13−12↑ 23+11↑	.....	10+2 ↑	7−9 ↑	1+2 ↑	16−4 ←
173	17+10↑	9+10← 19+9 ←	4+6 ↑	8+1 ↑	7−10←	.....	22−3 ↑
174	13+9 ↑	5+8 ← 14+7 ↑	.....	6+0 ←	6−11←	12+1 ↑	.....
175	10+8 ←	0+6 ↑ 10+5 ↑ 20+4 ←	2+5 ↑	4−1 ←	5−12↑	.....	3−2 ←
176	6+7 ←	6+3 ← 15+2 ↑	.....	1−2 ↑ 23−3 ←	4+11↑	23+0 ↑	9−1 ↑
177	2+6 ← 22+5 ↑	1+1 ↑ 11+0 ↑ 21−1 ←	0+4 ↑	21−4 ←	4+10←	.....	14−0 ←
178	18+4 ↑	7−2 ← 17−3 ←	22+3 ↑	18−5 ↑	3+9 ←	.....	20+1 ↑
179	14+3 ↑	2−4 ↑ 12−5 ↑ 22−6 ←	.....	16−6 ↑	2+8 ↑	10−1 ↑	.....
180	11+2 ←	8−7 ← 18−8 ←	21+2 ←	14−7 ←	2+7 ←	.....	1+2 ←
181	7+1 ←	3−9 ↑ 13−10↑ 23−11↑	.....	11−8 ↑	1+6 ←	21−2 ↑	7+3 ↑
182	3+0 ← 23−1 ↑	9−12← 19+11←	19+1 ←	9−9 ↑	0+5 ↑ 23+4 ↑	.....	12+4 ←
183	19−2 ↑	4+10↑ 14+9 ↑	.....	7−10←	23+3 ←	.....	18+5 ↑
184	15−3 ↑	0+8 ↑ 10+7 ← 20+6 ←	17+0 ←	5−11←	22+2 ←	9−3 ←	23+6 ←
185	12−4 ←	6+5 ← 15+4 ↑	.....	2−12↑	21+1 ↑	.....	.....
186	8−5 ←	1+3 ↑ 11+2 ← 21+1 ←	15−1 ↑	0+11↑ 22+10←	21+0 ←	20−4 ←	5+7 ↑
187	4−6 ←	7+0 ← 16−1 ↑	.....	19+9 ↑	20−1 ←	.....	10+8 ←
188	0−7 ↑ 20−8 ↑	2−2 ↑ 12−3 ↑ 22−4 ←	13−2 ↑	17+8 ↑	19−2 ↑	.....	16+9 ↑
189	16−9 ↑	8−5 ← 17−6 ↑	.....	15+7 ←	18−3 ↑	7−5 ←	21+10←
190	13−10←	3−7 ↑ 13−8 ↑ 23−9 ←	11−3 ↑	13+6 ←	18−4 ←	.....	.....
191	9−11←	9−10← 19−11←	.....	10+5 ↑	17−5 ↑	18−6 ←	3+11↑
192	5−12←	4−12↑ 14+11↑	10−4 ←	8+4 ←	16−6 ↑	.....	9−12↑
193	1+11↑ 21+10↑	0+10↑ 10+9 ← 20+8 ←	.....	6+3 ←	16−7 ←	.....	14−11←
194	17+9 ↑	5+7 ↑ 15+6 ↑	8−5 ←	3+2 ↑	15−8 ←	5−7 ←	20−10↑
195	14+8 ←	1+5 ↑ 11+4 ← 21+3 ←	.....	1+1 ↑ 23+0 ←	14−9 ↑	.....	.....
196	10+7 ←	7+2 ← 16+1 ↑	6−6 ←	21−1 ←	14−10←	16−8 ←	1−9 ←
197	6+6 ↑	2+0 ↑ 12−1 ← 22−2 ←	.....	18−2 ↑	13−11←	.....	7−8 ↑
198	2+5 ↑ 22+4 ↑	8−3 ← 17−4 ↑	4−7 ↑	16−3 ←	12−12↑	.....	12−7 ←
199	19+3 ←	3−5 ↑ 13−6 ↑ 23−7 ←	.....	14−4 ←	11+11↑	3−9 ←	18−6 ↑
200	15+2 ←	9−8 ← 18−9 ↑	2−8 ↑	11−5 ↑	11+10←	.....	23−5 ←
201	11+1 ←	4−10↑ 14−11↑	.....	9−6 ↑	10+9 ←	14−10←	.....
202	7+0 ↑	0−12← 10+11← 20+10←	0−9 ↑	7−7 ←	9+8 ↑	.....	5−4 ↑
203	3−1 ↑ 23−2 ↑	5+9 ↑ 15+8 ↑	23−10←	4−8 ↑	9+7 ←	.....	10−3 ←
204	20−3 ←	1+7 ← 11+6 ← 21+5 ←	.....	2−9 ↑	8+6 ←	1−11↑	16−2 ↑
205	16−4 ←	6+4 ↑ 16+3 ↑	21−11←	0−10← 22−11←	7+5 ↑	.....	21−1 ←
206	12−5 ←	2+2 ↑ 12+1 ← 22+0 ←	.....	19−12↑	6+4 ↑	12−12↑	.....
207	8−6 ↑	7−1 ↑ 17−2 ↑	19−12←	17+11↑	6+3 ←	.....	3−0 ↑
208	4−7 ↑	3−3 ↑ 13−4 ← 23−5 ←	.....	15+10←	5+2 ↑	23+11↑	8+1 ←
209	0−8 ↑ 21−9 ←	9−6 ↑ 18−7 ↑	17+11↑	12+9 ↑	4+1 ↑	.....	14+2 ↑
210	17−10←	4−8 ↑ 14−9 ←	.....	10+8 ↑	4+0 ←	.....	19+3 ←
211	13−11←	0−10← 10−11← 19−12↑	15+10↑	8+7 ←	3−1 ←	10+10↑	.....
212	9−12↑	5+11↑ 15+10↑	.....	6+6 ←	2−2 ↑	.....	1+4 ↑
213	5+11↑	1+9 ← 11+8 ← 20+7 ↑	13+9 ↑	3+5 ↑	1−3 ↑	21+9 ↑	7+5 ↑
214	1+10↑ 22+9 ←	6+6 ↑ 16+5 ↑	.....	1+4 ← 23+3 ←	1−4 ←	.....	12+6 ←
215	18+8 ←	2+4 ← 12+3 ← 22+2 ←	12+8 ←	20+2 ↑	0−5 ↑ 23−6 ↑	.....	18+7 ↑
216	14+7 ←	7+1 ↑ 17+0 ↑	.....	18+1 ↑	23−7 ←	8+8 ↑	23+8 ←
217	10+6 ↑	3−1 ↑ 13−2 ← 23−3 ←	10+7 ←	16+0 ←	22−8 ←	.....	.....
218	6+5 ↑	8−4 ↑ 18−5 ↑	.....	14−1 ←	21−9 ↑	19+7 ↑	5+9 ↑
219	2+4 ↑ 23+3 ←	4−6 ↑ 14−7 ←	8+6 ←	11−2 ↑	20−10↑	.....	10+10←
220	19+2 ←	0−8 ← 10−9 ← 19−10↑	.....	9−3 ←	20−11←	.....	16+11↑
221	15+1 ←	5−11↑ 15−12←	6+5 ↑	7−4 ←	19−12↑	6+6 ↑	21+12←
222	11+0 ↑	1+11← 11+10← 20+9 ↑	.....	4−5 ↑	18+11↑	.....	.....
223	7−1 ↑	6+8 ↑ 16+7 ↑	4+4 ↑	2−6 ↑	18+10←	18+5 ←	3−11↑
224	3−2 ↑	2+6 ← 12+5 ← 21+4 ↑	.....	0−7 ← 22−8 ←	17+9 ←	.....	8−10←
225	0−3 ← 20−4 ←	7+3 ↑ 17+2 ↑	2+3 ↑	19−9 ↑	16+8 ↑	.....	14−9 ↑
226	16−5 ←	3+1 ← 13+0 ← 23−1 ←	.....	17−10←	16+7 ←	5+4 ←	19−8 ←
227	12−6 ↑	8−2 ↑ 18−3 ↑	1+2 ←	15−11←	15+6 ←	.....	.....
228	8−7 ↑	4−4 ← 14−5 ←	23+1 ←	12−12↑	14+5 ↑	16+3 ←	1−7 ↑
229	4−8 ↑	0−6 ← 9−7 ↑ 19−8 ↑	.....	11+11↑	13+4 ↑	.....	6−6 ←
230	1−9 ← 21−10←	5−9 ↑ 15−10←	21+0 ←	8+10←	13+3 ←	.....	12−5 ↑
231	17−11←	1−11← 10−12↑ 20+11↑	.....	5+9 ↑	12+2 ←	3+2 ←	17−4 ←
232	13−12↑	6+10↑ 16+9 ←	19−1 ↑	3+8 ↑	11+1 ↑	.....	23−3 ←
233	9+11↑	2+8 ← 12+7 ← 21+6 ↑	.....	1+7 ← 23+6 ←	11+0 ←	14+1 ←	.....
234	5+10↑	7+5 ↑ 17+4 ←	17−2 ↑	20+5 ↑	10−1 ←	.....	5−2 ↑
235	2+9 ← 22+8 ←	3+3 ← 13+2 ← 22+1 ↑	.....	18+4 ↑	9−2 ↑	.....	10−1 ←
236	18+7 ←	8+0 ↑ 18−1 ↑	15−3 ↑	16+3 ←	8−3 ↑	1+0 ←	16−0 ↑
237	14+6 ↑	4−2 ← 14−3 ←	.....	13+2 ↑	8−4 ←	.....	21+1 ←
238	10+5 ↑	0−4 ← 9−5 ↑ 19−6 ↑	14−4 ←	11+1 ↑	7−5 ↑	12−1 ←	.....
239	6+4 ↑	5−7 ← 15−8 ←	.....	9+0 ←	6−6 ↑	.....	3+2 ↑
240	3+3 ← 23+2 ←	1−9 ← 10−10↑ 20−11↑	12−5 ←	7−1 ←	6−7 ←	23−2 ←	8+3 ←

TABLE 42.—*Component hours derived from solar hours*—Continued.

Day of series.	ν	ρ	MK	2MK	MN	MS	2SM
241	19+1 ←	6−12↑ 16+11←	.....	4−2 ↑	5−8 ←	.....	14+4 ↑
242	15+0 ↑	2+10← 11+9 ↑ 21+8 ↑	10−6 ←	2−3 ←	4−9 ↑	.....	19+5 ←
243	11−1 ↑	7+7 ↑ 17+6 ←	.....	0−4 ← 21−5 ↑	3−10↑	10−3 ↑	.....
244	7−2 ↑	3+5 ← 13+4 ← 22+3 ↑	8−7 ←	19−6 ↑	3−11←	.....	1+6 ↑
245	4−3 ←	8+2 ↑ 18+1 ←	.....	17−7 ←	2−12↑	21−4 ↑	6+7 ←
246	0−4 ← 20−5 ←	4+0 ← 14−1 ← 23−2 ↑	6−8 ↑	15−8 ←	1+11↑	.....	12+8 ↑
247	16−6 ↑	9−3 ↑ 19−4 ↑	.....	12−9 ↑	1+10←	.....	17+9 ←
248	12−7 ↑	5−5 ← 15−6 ←	4−9 ↑	10−10←	0+9 ← 23+8 ↑	8−5 ↑	23+10↑
249	8−8 ↑	0−7 ↑ 10−8 ↑ 20−9 ↑	.....	8−11←	22+7 ↑	.....	.....
250	5−9 ←	6−10← 16−11←	2−10↑	5−12↑	22+6 ←	19−6 ↑	4+11←
251	1−10← 21−11↑	2−12← 11+11↑ 21+10↑	.....	3+11↑	21+5 ↑	.....	10+12↑
252	17−12↑	7+9 ← 17+8 ←	1−11←	1+10← 22+9 ↑	20+4 ↑	.....	16−11↑
253	13+11↑	3+7 ← 12+6 ↑ 22+5 ↑	23−12←	20+8 ↑	20+3 ←	6−7 ↑	21−10←
254	10+10←	8+4 ↑ 18+3 ←	.....	18+7 ←	19+2 ←	.....	.....
255	6+9 ←	4+2 ← 13+1 ↑ 23+0 ↑	21+11←	16+6 ←	18+1 ↑	17−8 ↑	3−9 ↑
256	2+8 ← 22+7 ↑	9−1 ↑ 19−2 ←	.....	13+5 ↑	18+0 ←	.....	8−8 ←
257	18+6 ↑	5−3 ← 15−4 ←	19+10↑	11+4 ↑	17−1 ←	.....	14−7 ↑
258	14+5 ↑	0−5 ↑ 10−6 ↑ 20−7 ←	.....	9+3 ←	16−2 ↑	4−9 ↑	19−6 ←
259	11+4 ←	6−8 ← 16−9 ←	17+9 ↑	6+2 ↑	15−3 ↑	.....	.....
260	7+3 ←	1−10↑ 11−11↑ 21−12↑	.....	4+1 ↑	15−4 ←	15−10↑	1−5 ↑
261	3+2 ← 23+1 ↑	7+11← 17+10←	15+8 ↑	2+0 ←	14−5 ←	.....	6−4 ←
262	19+0 ↑	3+9 ← 12+8 ↑ 22+7 ↑	.....	0−1 ← 21−2 ↑	13−6 ↑	.....	12−3 ↑
263	15−1 ↑	8+6 ← 18+5 ←	14+7 ←	19−3 ↑	13−7 ←	3−11←	17−2 ←
264	12−2 ←	4+4 ← 13+3 ↑ 23+2 ↑	.....	17−4 ←	12−8 ←	.....	23−1 ↑
265	8−3 ←	9+1 ↑ 19+0 ←	12+6 ←	14−5 ↑	11−9 ↑	14−12←	.....
266	4−4 ←	5−1 ← 14−2 ↑	.....	12−6 ↑	10−10↑	.....	4−0 ←
267	0−5 ↑ 20−6 ↑	0−3 ↑ 10−4 ↑ 20−5 ←	10+5 ←	10−7 ←	10−11←	.....	10+1 ↑
268	16−7 ↑	6−6 ← 16−7 ←	.....	8−8 ←	9−12↑	1+11←	15+2 ←
269	13−8 ←	1−8 ↑ 11−9 ↑ 21−10←	8+4 ↑	5−9 ↑	8+11↑	.....	21+3 ↑
270	9−9 ←	7−11← 17−12←	.....	3−10←	8+10←	12+10←	.....
271	5−10←	2+11↑ 12+10↑ 22+9 ↑	6+3 ↑	1−11← 22−12↑	7+9 ←	.....	2+4 ←
272	1−11↑ 21−12↑	8+8 ← 18+7 ←	.....	20+11↑	6+8 ↑	23+9 ←	8+5 ↑
273	17+11↑	3+6 ↑ 13+5 ↑ 23+4 ↑	4+2 ↑	18+10←	5+7 ↑	.....	14+6 ↑
274	14+10←	9+3 ← 19+2 ←	.....	16+9 ←	5+[illegible] ←	.....	19+7 ←
275	10+9 ←	5+1 ← 14+0 ↑	3+1 ←	13+8 ↑	4+5 ↑	10+8 ←	.....
276	6+8 ←	0−1 ↑ 10−2 ← 20−3 ←	.....	11+7 ←	3+4 ↑	.....	1+8 ↑
277	2+7 ↑ 22+6 ↑	6−4 ← 15−5 ↑	1+0 ←	9+6 ←	3+3 ←	21+7 ←	6+9 ←
278	18+5 ↑	1−6 ↑ 11−7 ↑ 21−8 ←	23−1 ←	6+5 ↑	2+2 ←	.....	12+10↑
279	15+4 ←	7−9 ← 16−10↑	.....	4+4 ↑	1+1 ↑	.....	17+11←
280	11+3 ←	2−11↑ 12−12↑ 22+11←	21−2 ↑	2+3 ← 23+2 ↑	0+0 ↑	8+6 ←	23+12↑
281	7+2 ←	8+10← 18+9 ←	.....	21+1 ↑	0−1 ← 23−2 ↑	.....	.....
282	3+1 ↑ 23+0 ↑	3+8 ↑ 13+7 ↑ 23+6 ↑	19−3 ↑	19+0 ←	22−3 ↑	19+5 ↑	4−11←
283	19−1 ↑	9+5 ← 19+4 ←	.....	17−1 ←	22−4 ←	.....	10−10↑
284	16−2 ←	4+3 ↑ 14+2 ↑	17−4 ↑	14−2 ↑	21−5 ←	.....	15−9 ←
285	12−3 ←	0+1 ↑ 10+0 ← 20−1 ←	.....	12−3 ↑	20−6 ↑	6+4 ↑	21−8 ↑
286	8−4 ←	6−2 ← 15−3 ↑	16−5 ←	10−4 ←	20−7 ←	.....	.....
287	4−5 ↑	1−4 ↑ 11−5 ← 21−6 ←	.....	7−5 ↑	19−8 ←	17+3 ↑	2−7 ←
288	0−6 ↑ 20−7 ↑	7−7 ← 16−8 ↑	14−6 ←	5−6 ↑	18−9 ↑	.....	8−6 ↑
289	17−8 ←	2−9 ↑ 12−10↑ 22−11←	.....	3−7 ←	17−10↑	.....	13−5 ←
290	13−9 ←	8−12← 17+11↑	12−7 ←	1−8 ← 22−9 ↑	17−11←	4+2 ↑	19−4 ↑
291	9−10←	3+10↑ 13+9 ↑ 23+8 ←	.....	20−10←	16−12←	.....	.....
292	5−11↑	9+7 ← 19+6 ←	10−8 ↑	18−11←	15+11↑	15+1 ↑	0−3 ←
293	1−12↑ 21+11↑	4+5 ↑ 14+4 ↑	.....	15−12↑	15+10←	.....	6−2 ←
294	18+10←	0+3 ← 10+2 ← 20+1 ←	8−9 ↑	13+11↑	14+9 ←	.....	12−1 ↑
295	14+9 ←	5+0 ↑ 15−1 ↑	.....	11+10←	13+8 ↑	2+0 ↑	17−0 ←
296	10+8 ←	1−2 ↑ 11−3 ← 21−4 ←	6−10↑	9+9 ←	12+7 ↑	.....	23+1 ↑
297	6+7 ↑	6−5 ↑ 16−6 ↑	.....	6+8 ↑	12+6 ←	13−1 ↑	.....
298	2+6 ↑ 22+5 ↑	2−7 ↑ 12−8 ← 22−9 ←	5−11←	4+7 ←	11+5 ↑	.....	4+2 ←
299	19+4 ←	8−10← 17−11↑	.....	2+6 ← 23+5 ↑	10+4 ↑	.....	10+3 ↑
300	15+3 ←	3−12↑ 13+11← 23+10←	3−12←	21+4 ↑	10+3 ←	0−2 ↑	15+4 ←
301	11+2 ←	9+9 ← 18+8 ↑	.....	19+3 ←	9+2 ←	.....	21+5 ↑
302	7+1 ↑	4+7 ↑ 14+6 ↑	1+11←	16+2 ↑	8+1 ↑	11−3 ↑	.....
303	3+0 ↑ 23−1 ↑	0+5 ← 10+4 ← 19+3 ↑	23+10↑	14+1 ↑	7+0 ↑	.....	2+6 ←
304	20−2 ←	5+2 ↑ 15+1 ↑	.....	12+0 ←	7−1 ←	23−4 ←	8+7 ↑
305	16−3 ←	1+0 ← 11−1 ← 21−2 ←	21+9 ↑	10−1 ←	6−2 ↑	.....	13+8 ←
306	12−4 ↑	6−3 ↑ 16−4 ↑	.....	7−2 ↑	5−3 ↑	.....	19+9 ↑
307	8−5 ↑	2−5 ↑ 12−6 ← 22−7 ←	19+8 ↑	5−3 ↑	5−4 ←	10−5 ←	.....
308	4−6 ↑	7−8 ↑ 17−9 ↑	.....	3−4 ←	4−5 ←	.....	0+10←
309	1−7 ← 21−8 ←	3−10↑ 13−11← 23−12←	18+7 ←	0−5 ↑ 22−6 ↑	3−6 ↑	21−6 ←	6+11↑
310	17−9 ←	9+11← 18+10↑	.....	20−7 ←	2−7 ↑	.....	11+12←
311	13−10↑	4+9 ↑ 14+8 ←	16+6 ←	18−8 ←	2−8 ←	.....	17−11↑
312	9−11↑	0+7 ← 10+6 ← 19+5 ↑	.....	15−9 ↑	1−9 ↑	8−7 ←	23−10↑
313	5−12↑	5+4 ↑ 15+3 ↑	14+5 ←	13−10↑	0−10↑	.....	.....
314	2+11← 22+10←	1+2 ← 11+1 ← 20+0 ↑	.....	11−11←	0−11← 23−12←	19−8 ←	4−9 ←
315	18+9 ←	6−1 ↑ 16−2 ↑	12+4 ←	8−12↑	22+11↑	.....	10−8 ↑
316	14+8 ↑	2−3 ← 12−4 ← 22−5 ←	.....	6+11↑	22+10←	.....	15−7 ←
317	10+7 ↑	7−6 ↑ 17−7 ↑	10+3 ↑	4+10←	21+9 ←	6−9 ←	21−6 ↑
318	6+6 ↑	3−8 ← 13−9 ← 23−10←	.....	2+9 ← 23+8 ↑	20+8 ↑	.....	.....
319	3+5 ← 23+4 ←	8−11↑ 18−12↑	8+2 ↑	21+7 ←	19+7 ↑	17−10←	2−5 ←
320	19+3 ←	4+11↑ 14+10←	.....	19+6 ←	19+6 ←	.....	8−4 ↑

TABLE 42.—*Component hours derived from solar hours*—Continued.

Day of series.	ν	ρ	MK	2MK	MN	MS	2SM
321	15+2 ↑	0+9 ← 9+8 ↑ 19+7 ↑	6+1 ↑	16+5 ↑	18+5 ←	.....	13−3 ←
322	11+1 ↑	5+6 ↑ 15+5 ←	.....	14+4 ↑	17+4 ↑	4−11←	19−2 ↑
323	7+0 ↑	1+4 ← 11+3 ← 20+2 ↑	5+0 ←	12+3 ←	17+3 ←	.....	.....
324	4−1 ←	6+1 ↑ 16+0 ←	.....	10+2 ←	16+2 ←	15−12↑	0−1 ←
325	0−2 ← 20−3 ←	2−1 ← 12−2 ← 21−3 ↑	3−1 ←	7+1 ↑	15+1 ↑	.....	6−0 ↑
326	16−4 ↑	7−4 ↑ 17−5 ↑	.....	5+0 ←	14+0 ↑	.....	11+1 ←
327	12−5 ↑	3−6 ← 13−7 ← 23−8 ←	1−2 ←	3−1 ←	14−1 ←	2+11↑	17+2 ↑
328	8−6 ↑	8−9 ↑ 18−10↑	23−3 ↑	0−2 ↑ 22−3 ↑	13−2 ↑	.....	22+3 ←
329	5−7 ←	4−11← 14−12←	.....	20−4 ←	12−3 ↑	13+10↑	.....
330	1−8 ← 21−9 ←	0+11← 9+10↑ 19+9 ↑	21−4 ↑	17−5 ↑	12−4 ←	.....	4+4 ↑
331	17−10↑	5+8 ↑ 15+7 ←	.....	15−6 ↑	11−5 ←	.....	9+5 ←
332	13−11↑	1+6 ← 10+5 ↑ 20+4 ↑	19−5 ↑	13−7 ←	10−6 ↑	0+9 ↑	15+6 ↑
333	9−12↑	6+3 ↑ 16+2 ←	.....	11−8 ←	9−7 ↑	.....	21+7 ↑
334	6+11←	2+1 ← 12+0 ← 21−1 ↑	18−6 ←	8−9 ↑	9−8 ←	11+8 ↑	.....
335	2+10← 22+9 ←	7−2 ↑ 17−3 ←	.....	6−10↑	8−9 ↑	.....	2+8 ←
336	18+8 ↑	3−4 ← 13−5 ← 22−6 ↑	16−7 ←	4−11←	7−10↑	22+7 ↑	8+9 ↑
337	14+7 ↑	8−7 ↑ 18−8 ↑	.....	1−12↑ 23+11↑	7−11←	.....	13+10←
338	10+6 ↑	4−9 ← 14−10← 23−11↑	14−8 ←	21+10←	6−12←	.....	19+11↑
339	7+5 ←	9−12↑ 19+11↑	.....	19+9 ←	5+11↑	9+6 ↑	.....
340	3+4 ← 23+3 ←	5+10← 15+9 ←	12−9 ↑	16+8 ↑	5+10←	.....	0+12←
341	19+2 ↑	1+8 ← 10+7 ↑ 20+6 ↑	.....	14+7 ←	4+9 ←	20+5 ↑	6−11↑
342	15+1 ↑	6+5 ← 16+4 ←	10−10↑	12+6 ←	3+8 ↑	.....	11−10←
343	11+0 ↑	2+3 ← 11+2 ↑ 21+1 ↑	.....	9+5 ↑	2+7 ↑	.....	17−9 ↑
344	8−1 ←	7+0 ↑ 17−1 ←	8−11↑	7+4 ↑	2+6 ←	8+4 ←	22−8 ←
345	4−2 ←	3−2 ← 12−3 ↑ 22−4 ↑	.....	5+3 ←	1+5 ←	.....	.....
346	0−3 ← 20−4 ↑	8−5 ↑ 18−6 ←	7−12←	3+2 ←	0+4 ↑	19+3 ←	4−7 ↑
347	16−5 ↑	4−7 ← 14−8 ← 23−9 ↑	.....	0+1 ↑ 22+0 ←	0+3 ← 23+2 ←	.....	9−6 ←
348	12−6 ↑	9−10↑ 19−11←	5+11←	20−1 ←	22+1 ↑	.....	15−5 ↑
349	9−7 ←	5−12← 15+11←	.....	17−2 ↑	21+0 ↑	6+2 ←	20−4 ←
350	5−8 ←	0+10↑ 10+9 ↑ 20+8 ↑	3+10←	15−3 ↑	21−1 ←	.....	.....
351	1−9 ← 21−10↑	6+7 ← 16+6 ←	.....	13−4 ←	20−2 ←	17+1 ←	2−3 ↑
352	17−11↑	2+5 ← 11+4 ↑ 21+3 ↑	1+9 ↑	10−5 ↑	19−3 ↑	.....	7−2 ←
353	13−12↑	7+2 ← 17+1 ←	23+8 ↑	8−6 ↑	19−4 ←	.....	13−1 ←
354	10+11←	3+0 ← 12−1 ↑ 22−2 ↑	.....	6−7 ←	18−5 ←	4+0 ←	19−0 ↑
355	6+10←	8−3 ↑ 18−4 ←	21+7 ↑	4−8 ←	17−6 ↑	.....	.....
356	2+9 ← 22+8 ↑	4−5 ← 13−6 ↑ 23−7 ↑	.....	1−9 ↑ 23−10↑	16−7 ↑	15−1 ←	0+1 ←
357	18+7 ↑	9−8 ↑ 19−9 ←	20+6 ←	21−11←	16−8 ←	.....	6+2 ↑
358	14+6 ↑	5−10← 15−11←	.....	18−12↑	15−9 ↑	.....	11+3 ←
359	11+5 ←	0−12↑ 10+11↑ 20+10←	18+5 ←	16+11↑	14−10↑	2−2 ←	17+4 ↑
360	7+4 ←	6+9 ← 16+8 ←	.....	14+10←	14−11←	.....	22+5 ←
361	3+3 ← 23+2 ↑	1+7 ↑ 11+6 ↑ 21+5 ↑	16+4 ←	12+9 ←	13−12←	13−3 ←	.....
362	19+1 ↑	7+4 ← 17+3 ←	.....	9+8 ↑	12+11↑	.....	4+6 ↑
363	16+0 ←	2+2 ↑ 12+1 ↑ 22+0 ↑	14+3 ↑	7+7 ↑	11+10↑	.....	9+7 ←
364	12−1 ←	8−1 ← 18−2 ←	.....	5+6 ←	11+ 9←	0−4 ↑	15+8 ↑
365	8−2 ←	4−3 ← 13−4 ↑ 23−5 ↑	12+2 ↑	2+5 ↑	10+ 8↑	.....	20+9 ←
366	4−3 ↑	9−6 ← 19−7 ←	.....	0+4 ↑ 22+3 ←	9+7 ↑	11−5 ↑	.....
367	0−4 ↑ 20−5 ↑	5−8 ← 14−9 ↑	10+1 ↑	20+2 ←	9+6 ←	.....	2+10↑
368	17−6 ←	0−10↑ 10−11↑ 20−12←	.....	17+1 ↑	8+5 ←	22−6 ↑	7+11←
369	13−7 ←	6+11← 15+10↑	9+0 ←	15+0 ←	7+4 ↑	.....	13+12↑
370	9−8 ←	1+9 ↑ 11+8 ↑ 21+7 ←	.....	13−1 ←	7+3 ←	.....	18−11←
371	5−9 ↑	7+6 ← 17+5 ←	7−1 ←	10−2 ↑	6+2 ←	9−7 ↑	.....

Where one, and only one, hourly height is to go on each component hour, the arrow is used to indicate which hourly height to use. A horizontal arrow indicates that the hourly height belonging to the solar hour written is the one to be taken; an arrow pointing upward indicates that the hourly height belonging to the solar hour next preceding the solar hour written is the one to be taken. For the components J, K, OO, R, and 2 SM the value thus indicated is to be used twice. The group covered is obviously a solar and not a component hour. See §§ 53, 57, Part II.

Rules for constructing or verifying this table.

$$\text{Left-hand part of tabular value} = 1 + (d - \tfrac{1}{2})\,\frac{15}{15 \sim c_1},$$

discarding the decimal even if it exceed 0.5; d is an integer such that

$$d = 24\left[(\text{day of series} - 1) \div \frac{15}{15 \sim c_1}\right] \mp \text{right-hand part of tabular value, including sign.}$$

The quotient in the brackets is taken to the nearest integer generally. The upper sign is used when $c_1 < 15$; the lower, when $c_1 > 15$.

$c_1 < 15$. If the decimal of solar hour in the first equation above fall between 0.0 and 0.5, the arrow should be horizontal; if between 0.5 and 1.0, vertical.

$c_1 > 15$. Reverse this rule.

The speeds used are those derived from the mean motions given in § 13.

Instead of the above rules, the following may be used:

Suppose all solar hours of the series to have been converted into component hours; in each doubtful case mark that solar hour which lies nearest the component hour thus considered.

TABLE 43.—*For the summation of long-period tides.*

Day of series.	Mf	MSf	Mm	Sa	Day of series.	Mf	MSf	Mm	Sa	Day of series.	Mf	MSf	Mm	Sa
1	0	0	0	0	76	18	13←	18		151	12	2	11	
2	1	1	1		77	19	14	19←		152	13	3	12	
3	2	2	2		78	20	15	19		153	14	4	13	
4	3	3	3		79	21	16	20		154	15	5	14	
5	4	4←	4		80	22	17←	21		155	16	6	15	
6	5	4	5		81	23	17	22		156	17←	6←	15←	
7	6	5	6		82	0←	18	23		157	17	7	16	
8	7←	6	7	0	83	0	19	0	5	158	18	8	17	
9	7	7	7←	1	84	1	20	1	6	159	19	9	18	10
10	8	8	8		85	2	21←	2←		160	20	10←	19	11
11	9	9	9		86	3	21	2		161	21	10	20	
12	10	9←	10		87	4	22	3		162	22	11	21	
13	11	10	11		88	5	23	4		163	23	12	22	
14	12	11	12		89	6	0	5		164	0←	13	22←	
15	13	12	13←		90	7←	1	6		165	0	14←	23	
16	14←	13	13		91	7	2	7		166	1	14	0	
17	14	13←	14		92	8	2←	8		167	2	15	1	
18	15	14	15		93	9	3	9		168	3	16	2	
19	16	15	16		94	10	4	9←		169	4	17	3	
20	17	16	17		95	11	5	10		170	5	18	4←	
21	18	17←	18		96	12	6←	11		171	6	19	4	
22	19	17	19		97	13	6	12		172	7	19←	5	
23	20	18	20←	1	98	14	7	13	6	173	8	20	6	
24	21	19	20	2	99	15	8	14	7	174	8←	21	7	11
25	22	20	21		100	15←	9	15		175	9	22	8	12
26	22←	21	22		101	16	10←	16		176	10	23←	9	
27	23	22	23		102	17	10	16←		177	11	23	10	
28	0	22←	0		103	18	11	17		178	12	0	11←	
29	1	23	1		104	19	12	18		179	13	1	11	
30	2	0	2		105	20	13	19		180	14	2	12	
31	3	1	3		106	21	14	20		181	15	3←	13	
32	4	2	3←		107	22	15	21		182	15←	3	14	
33	5	2←	4		108	22←	15←	22←		183	16	4	15	
34	5←	3	5		109	23	16	22		184	17	5	16	
35	6	4	6		110	0	17	23		185	18	6	17	
36	7	5	7		111	1	18	0		186	19	7	18	
37	8	6←	8		112	2	19←	1		187	20	8	18←	
38	9	6	9	2	113	3	19	2	7	188	21	8←	19	
39	10	7	10	3	114	4	20	3	8	189	22←	9	20	12
40	11	8	10←		115	5←	21	4		190	22	10	21	13
41	12	9	11		116	5	22	5←		191	23	11	22	
42	12←	10	12		117	6	23←	5		192	0	12←	23	
43	13	11	13		118	7	23	6		193	1	12	0	
44	14	11←	14		119	8	0	7		194	2	13	1	
45	15	12	15		120	9	1	8		195	3	14	1←	
46	16	13	16←		121	10	2	9		196	4	15	2	
47	17	14	16		122	11	3	10		197	5←	16←	3	
48	18	15	17		123	12←	4	11		198	5	16	4	
49	19←	15←	18		124	12	4←	12		199	6	17	5	
50	19	16	19		125	13	5	12←		200	7	18	6	
51	20	17	20		126	14	6	13		201	8	19	7←	
52	21	18	21	3	127	15	7	14		202	9	20	7	
53	22	19←	22	4	128	16	8←	15	8	203	10	21	8	
54	23	19	23←		129	17	8	16	9	204	11	21←	9	13
55	0	20	23		130	18	9	17		205	12←	22	10	14
56	1	21	0		131	19←	10	18		206	12	23	11	
57	2←	22	1		132	19	11	19		207	13	0	12	
58	2	23	2		133	20	12←	19←		208	14	1←	13	
59	3	0	3		134	21	12	20		209	15	1	14←	
60	4	0←	4		135	22	13	21		210	16	2	14	
61	5	1	5		136	23	14	22		211	17	3	15	
62	6	2	6		137	0	15	23		212	18	4	16	
63	7	3	6←		138	1	16	0		213	19	5←	17	
64	8	4	7		139	2	17	1←		214	20	5	18	
65	9	4←	8		140	3	17←	1		215	20←	6	19	
66	10	5	9		141	3←	18	2		216	21	7	20	
67	10←	6	10		142	4	19	3		217	22	8	21	
68	11	7	11	4	143	5	20	4		218	23	9	21←	
69	12	8←	12	5	144	6	21←	5	9	219	0	10	22	
70	13	8	13		145	7	21	6	10	220	1	10←	23	14
71	14	9	13←		146	8	22	7		221	2	11	0	15
72	15	10	14		147	9	23	8←		222	3	12	1	
73	16	11	15		148	10	0	8		223	3←	13	2	
74	17	12	16		149	10←	1←	9		224	4	14←	3	
75	17←	13	17		150	11	1	10		225	5	14	4	

This table gives the nearest component "hour" (i. e., 24th of monthly or yearly period) for each day (11:30 a. m.) of the series.

In Mf, MSf, and Mm two days sometimes fall upon the same "hour." The arrow is used to indicate the one making the closer coincidence. Consequently the one so marked, or rather the corresponding daily height, is the one to be taken in preference to the other. See note given below Table 38.

TABLE 43.—*For the summation of long-period tides*—Continued.

Day of series.	Mf	MSf	Mm	Sa	Day of series.	Mf	MSf	Mm	Sa	Day of series.	Mf	MSf	Mm	Sa
226	6	15	4←		311	9	12←	6←	20	396	11←	9	8	
227	7	16	5		312	10←	13	7	21	397	12	10	9	
228	8	17	6		313	10	14	8		398	13	11	10	
229	9	18	7		314	11	15	9		399	14	12	11	
230	10←	19	8		315	12	16	10		400	15	13←	12	
231	10	19←	9		316	13	16←	11		401	16	13	13	
232	11	20	10←		317	14	17	12		402	17	14	14	2
233	12	21	10		318	15	18	13		403	18	15	15	3
234	13	22	11		319	16	19	13←		404	18←	16	15←	
235	14	23	12	15	320	17	20←	14		405	19	17	16	
236	15	23←	13	16	321	18	20	15		406	20	18	17	
237	16	0	14		322	18←	21	16		407	21	18←	18	
238	17←	1	15		323	19	22	17		408	22	19	19	
239	17	2	16		324	20	23	18		409	23	20	20	
240	18	3←	17←		325	21	0	19←		410	0	21	21	
241	19	3	17		326	22	1	19	21	411	1←	22←	22	
242	20	4	18		327	23	1←	20	22	412	1	22	22←	
243	21	5	19		328	0	2	21		413	2	23	23	
244	22	6	20		329	1	3	22		414	3	0	0	
245	23	7	21		330	1←	4	23		415	4	1	1	
246	0	8	22		331	2	5	0		416	5	2←	2	
247	1	8←	23		332	3	5←	1		417	6	2	3	
248	1←	9	0		333	4	6	2←		418	7	3	4←	3
249	2	10	0←		334	5	7	2		419	8←	4	4	4
250	3	11	1	16	335	6	8	3		420	8	5	5	
251	4	12	2	17	336	7	9←	4		421	9	6	6	
252	5	12←	3		337	8←	9	5		422	10	7	7	
253	6	13	4		338	8	10	6		423	11	7←	8	
254	7	14	5		339	9	11	7		424	12	8	9	
255	8	15	6		340	10	12	8		425	13	9	10	
256	8←	16←	7		341	11	13	9	22	426	14	10	11←	
257	9	16	7←		342	12	14	9←	23	427	15	11←	11	
258	10	17	8		343	13	14←	10		428	16	11	12	
259	11	18	9		344	14	15	11		429	16←	12	13	
260	12	19	10		345	15←	16	12		430	17	13	14	
261	13	20	11		346	15	17	13		431	18	14	15	
262	14	21	12		347	16	18	14		432	19	15←	16	
263	15←	21←	13←		348	17	18←	15		433	20	15	17	4
264	15	22	13		349	18	19	16		434	21	16	18	5
265	16	23	14	17	350	19	20	16←		435	22	17	18←	
266	17	0	15	18	351	20	21	17		436	23	18	19	
267	18	1	16		352	21	22←	18		437	23←	19	20	
268	19	1←	17		353	22	22	19		438	0	20	21	
269	20	2	18		354	23	23	20		439	1	20←	22	
270	21	3	19		355	23←	0	21		440	2	21	23	
271	22←	4	20←		356	0	1	22←		441	3	22	0	
272	22	5←	20		357	1	2	22	23	442	4	23	1	
273	23	5	21		358	2	3	23	0	443	5	0←	1←	
274	0	6	22		359	3	3←	0		444	6←	0	2	
275	1	7	23		360	4	4	1		445	6	1	3	
276	2	8	0		361	5	5	2		446	7	2	4	
277	3	9	1		362	6	6	3		447	8	3	5	
278	4	10	2		363	6←	7	4		448	9	4←	6	5
279	5	10←	3		364	7	7←	5←		449	10	4	7←	6
280	6	11	3←		365	8	8	5		450	11	5	7	
281	6←	12	4	18	366	9	9	6		451	12	6	8	
282	7	13	5	19	367	10	10	7		452	13←	7	9	
283	8	14	6		368	11	11←	8		453	13	8	10	
284	9	14←	7		369	12	11	9		454	14	9	11	
285	10	15	8		370	13	12	10		455	15	9←	12	
286	11	16	9		371	13←	13	11		456	16	10	13	
287	12	17	10		372	14	14	12	0	457	17	11	14←	
288	13	18←	10←		373	15	15	12←	1	458	18	12	14	
289	13←	18	11		374	16	16	13		459	19	13←	15	
290	14	19	12		375	17	16←	14		460	20←	13	16	
291	15	20	13		376	18	17	15		461	20	14	17	
292	16	21	14		377	19	18	16		462	21	15	18	
293	17	22	15		378	20←	19	17		463	22	16	19	6
294	18	23	16←		379	20	20←	18		464	23	17←	20	7
295	19	23←	16		380	21	20	19		465	0	17	21	
296	20	0	17	19	381	22	21	19←		466	1	18	21←	
297	20←	1	18	20	382	23	22	20		467	2	19	22	
298	21	2	19		383	0	23	21		468	3	20	23	
299	22	3	20		384	1	0←	22		469	4	21	0	
300	23	3←	21		385	2	0	23		470	4←	22	1	
301	0	4	22		386	3←	1	0		471	5	22←	2	
302	1	5	23←		387	3	2	1←	1	472	6	23	3	
303	2	6	23		388	4	3	1	2	473	7	0	4	
304	3←	7←	0		389	5	4	2		474	8	1	4←	
305	3	7	1		390	6	5	3		475	9	2←	5	
306	4	8	2		391	7	5←	4		476	10	2	6	
307	5	9	3		392	8	6	5		477	11	3	7	
308	6	10	4		393	9	7	6		478	11←	4	8	7
309	7	11	5		394	10	8	7		479	12	5	9	8
310	8	12	6		395	11	9←	8←		480	13	6←	10←	

TABLE 43.—*For the summation of long-period tides*—Continued.

Day of series.	Mf	Msf	Mm	Sa	Day of series.	Mf	MSf	Mm	Sa	Day of series.	Mf	MSf	Mm	Sa
481	14	6	10		566	17	4	13		651	19←	1←	15←	
482	15	7	11		567	18←	4←	13←		652	20	1	15	
483	16	8	12		568	18	5	14		653	21	2	16	
484	17	9	13		569	19	6	15		654	22	3	17	
485	18←	10	14		570	20	7	16	13	655	23	4	18	
486	18	11	15		571	21	8←	17	14	656	0	5	19	
487	19	11←	16		572	22	8	18		657	1	6	20	
488	20	12	17←		573	23	9	19		658	2	6←	21	
489	21	13	17		574	0	10	20		659	2←	7	22	
490	22	14	18		575	1	11	20←		660	3	8	22←	
491	23	15←	19		576	2	12	21		661	4	9	23	19
492	0	15	20		577	2←	13	22		662	5	10←	0	20
493	1←	16	21		578	3	13←	23		663	6	10	1	
494	1	17	22	8	579	4	14	0		664	7	11	2	
495	2	18	23	9	580	5	15	1		665	8	12	3	
496	3	19←	0		581	6	16	2←		666	9←	13	4	
497	4	19	0←		582	7	17	2		667	9	14←	5	
498	5	20	1		583	8	17←	3		668	10	14	5←	
499	6	21	2		584	9	18	4		669	11	15	6	
500	7	22	3		585	9←	19	5	14	670	12	16	7	
501	8	23	4		586	10	20	6	15	671	13	17	8	
502	9	0	5		587	11	21←	7		672	14	18	9	
503	9←	0←	6		588	12	21	8		673	15	19	10	
504	10	1	7		589	13	22	9←		674	16←	19←	11←	
505	11	2	7←		590	14	23	9		675	16	20	11	
506	12	3	8		591	15	0	10		676	17	21	12	20
507	13	4←	9		592	16←	1	11		677	18	22	13	21
508	14	4	10		593	16	2	12		678	19	23←	14	
509	15	5	11	9	594	17	2←	13		679	20	23	15	
510	16	6	12	10	595	18	3	14		680	21	0	16	
511	16←	7	13←		596	19	4	15		681	22	1	17	
512	17	8	13		597	20	5	16		682	23	2	18←	
513	18	9	14		598	21	6	16←		683	0	3←	18	
514	19	9←	15		599	22	6←	17		684	0←	3	19	
515	20	10	16		600	23←	7	18	15	685	1	4	20	
516	21	11	17		601	23	8	19	16	686	2	5	21	
517	22	12	18		602	0	9	20		687	3	6	22	
518	23←	13	19		603	1	10←	21		688	4	7	23	
519	23	13←	20←		604	2	10	22		689	5	8	0	
520	0	14	20		605	3	11	23		690	6	8←	1	
521	1	15	21		606	4	12	23←		691	7	9	1←	21
522	2	16	22		607	5	13	0		692	7←	10	2	22
523	3	17←	23		608	6	14	1		693	8	11	3	
524	4	17	0	10	609	7	15	2		694	9	12←	4	
525	5	18	1	11	610	7←	15←	3		695	10	12	5	
526	6←	19	2		611	8	16	4		696	11	13	6	
527	6	20	3		612	9	17	5←		697	12	14	7	
528	7	21	3←		613	10	18	5		698	13	15	8	
529	8	22	4		614	11	19	6		699	14←	16←	8←	
530	9	22←	5		615	12	19←	7	16	700	14	16	9	
531	10	23	6		616	13	20	8	17	701	15	17	10	
532	11	0	7		617	14	21	9		702	16	18	11	
533	12	1	8		618	14←	22	10		703	17	19	12	
534	13	2	9		619	15	23←	11		704	18	20	13	
535	14	2←	10		620	16	23	12←		705	19	21	14←	
536	14←	3	10←		621	17	0	12		706	20	21←	14	
537	15	4	11		622	18	1	13		707	21←	22	15	22
538	16	5	12		623	19	2	14		708	21	23	16	23
539	17	6←	13	11	624	20	3	15		709	22	0	17	
540	18	6	14	12	625	21	4	16		710	23	1←	18	
541	19	7	15		626	21←	4←	17		711	0	1	19	
542	20	8	16←		627	22	5	18		712	1	2	20	
543	21	9	16		628	23	6	19		713	2	3	21←	
544	21←	10	17		629	0	7	19←		714	3	4	21	
545	22	11	18		630	1	8	20		715	4←	5←	22	
546	23	11←	19		631	2	8←	21	17	716	4	5	23	
547	0	12	20		632	3	9	22	18	717	5	6	0	
548	1	13	21		633	4←	10	23		718	6	7	1	
549	2	14	22		634	4	11	0		719	7	8	2	
550	3	15	23←		635	5	12←	1		720	8	9	3	
551	4	15←	23		636	6	12	2		721	9	10	4	
552	4←	16	0		637	7	13	2←		722	10	10←	4←	23
553	5	17	1		638	8	14	3		723	11	11	5	0
554	6	18	2	12	639	9	15	4		724	12	12	6	
555	7	19←	3	13	640	10	16	5		725	12←	13	7	
556	8	19	4		641	11←	17	6		726	13	14←	8	
557	9	20	5		642	11	17←	7		727	14	14	9	
558	10	21	6		643	12	18	8←		728	15	15	10	
559	11←	22	6←		644	13	19	8		729	16	16	11	
560	11	23	7		645	14	20	9		730	17	17	11←	
561	12	0	8		646	15	21	10	18	731	18	18←	12	
562	13	0←	9		647	16	21←	11	19	732	19	18	13	
563	14	1	10		648	17	22	12		733	19←	19	14	
564	15	2	11		649	18	23	13		734	20	20	15	
565	16	3	12		650	19	0	14		735	21	21	16	

TABLE 43.—*For the summation of long-period tides*—Continued.

Day of series.	Mf	MSf	Mm	Sa	Day of series.	Mf	MSf	Mm	Sa	Day of series.	Mf	MSf	Mm	Sa
736	22	22	17←		821	1	19	19		906	3←	16	21	12
737	23	23	17	0	822	2←	20←	20		907	4	17	22	
738	0	23←	18	1	823	2	20	20←		908	5	18	22←	
739	1	0	19		824	3	21	21		909	6	18←	23	
740	2←	1	20		825	4	22	22		910	7	19	0	
741	2	2	21		826	5	23	23		911	8	20	1	
742	3	3←	22		827	6	0	0		912	9	21	2	
743	4	3	23		828	7	1	1	6	913	10	22	3	
744	5	4	0←		829	8	1←	2←	7	914	10←	22←	4	
745	6	5	0		830	9	2	2		915	11	23	5	
746	7	6	1		831	10	3	3		916	12	0	5←	
747	8	7←	2		832	10←	4	4		917	13	1	6	
748	9←	7	3		833	11	5	5		918	14	2←	7	
749	9	8	4		834	12	5←	6		919	15	2	8	
750	10	9	5		835	13	6	7		920	16	3	9	12
751	11	10	6		836	14	7	8		921	17←	4	10	13
752	12	11	7	1	837	15	8	9←		922	17	5	11←	
753	13	12	7←	2	838	16	9←	9		923	18	6	11	
754	14	12←	8		839	17	9	10		924	19	7	12	
755	15	13	9		840	17←	10	11		925	20	7←	13	
756	16	14	10		841	18	11	12		926	21	8	14	
757	17	15	11		842	19	12	13		927	22	9	15	
758	17←	16←	12		843	20	13	14		928	23	10	16	
759	18	16	13		844	21	14	15	7	929	0←	11	17	
760	19	17	14		845	22	14←	16	8	930	0	11←	18←	
761	20	18	14←		846	23	15	16←		931	1	12	18	
762	21	19	15		847	0←	16	17		932	2	13	19	
763	22	20←	16		848	0	17	18		933	3	14	20	
764	23	20	17		849	1	18	19		934	4	15←	21	
765	0	21	18		850	2	18←	20		935	5	15	22	13
766	0←	22	19		851	3	19	21		936	6	16	23	14
767	1	23	20←		852	4	20	22		937	7	17	0	
768	2	0	20	2	853	5	21	23		938	8	18	1	
769	3	1	21	3	854	6	22←	23←		939	8←	19	1←	
770	4	1←	22		855	7←	22	0		940	9	20	2	
771	5	2	23		856	7	23	1		941	10	20←	3	
772	6	3	0		857	8	0	2		942	11	21	4	
773	7←	4	1		858	9	1	3		943	12	22	5	
774	7	5←	2		859	10	2	4	8	944	13	23	6	
775	8	5	3←		860	11	3	5←	9	945	14	0←	7	
776	9	6	3		861	12	3←	5		946	15	0	8	
777	10	7	4		862	13	4	6		947	15←	1	8←	
778	11	8	5		863	14	5	7		948	16	2	9	
779	12	9←	6		864	15	6	8		949	17	3	10	
780	13	9	7		865	15←	7	9		950	18	4←	11	14
781	14←	10	8		866	16	7←	10		951	19	4	12	15
782	14	11	9		867	17	8	11		952	20	5	13	
783	15	12	10	3	868	18	9	12←		953	21	6	14←	
784	16	13	10←	4	869	19	10	12		954	22←	7	14	
785	17	14	11		870	20	11←	13		955	22	8	15	
786	18	14←	12		871	21	11	14		956	23	9	16	
787	19	15	13		872	22	12	15		957	0	9←	17	
788	20	16	14		873	22←	13	16		958	1	10	18	
789	21←	17	15		874	23	14	17	9	959	2	11	19	
790	21	18←	16		875	0	15	18	10	960	3	12	20	
791	22	18	17		876	1	16	19		961	4	13←	21←	
792	23	19	17←		877	2	16←	19←		962	5←	13	21	
793	0	20	18		878	3	17	20		963	5	14	22	
794	1	21	19		879	4	18	21		964	6	15	23	
795	2	22←	20		880	5	19	22		965	7	16	0	15
796	3	22	21		881	5←	20	23		966	8	17←	1	16
797	4	23	22		882	6	20←	0		967	9	17	2	
798	5	0	23←	4	883	7	21	1		968	10	18	3	
799	5←	1	23	5	884	8	22	2		969	11	19	4	
800	6	2	0		885	9	23	2←		970	12←	20	4←	
801	7	3	1		886	10	0←	3		971	12	21	5	
802	8	3←	2		887	11	0	4		972	13	22	6	
803	9	4	3		888	12←	1	5		973	14	22←	7	
804	10	5	4		889	12	2	6	10	974	15	23	8	
805	11	6	5		890	13	3	7	11	975	16	0	9	
806	12	7←	6←		891	14	4	8←		976	17	1	10	
807	12←	7	6		892	15	5	8		977	18	2←	11	
808	13	8	7		893	16	5←	9		978	19	2	11←	
809	14	9	8		894	17	6	10		979	20	3	12	
810	15	10	9		895	18	7	11		980	20←	4	13	
811	16	11	10		896	19←	8	12		981	21	5	14	16
812	17	12	11		897	19	9	13		982	22	6←	15	17
813	18	12←	12	5	898	20	9←	14		983	23	6	16	
814	19←	13	13	6	899	21	10	15←		984	0	7	17←	
815	19	14	13←		900	22	11	15		985	1	8	17	
816	20	15	14		901	23	12	16		986	2	9	18	
817	21	16	15		902	0	13←	17		987	3	10	19	
818	22	16←	16		903	1	13	18		988	3←	11	20	
819	23	17	17		904	2	14	19		989	4	11←	21	
820	0	18	18		905	3	15	20	11	990	5	12	22	

TABLE 43.—*For the summation of long-period tides*—Continued.

Day of series	Mf	MSf	Mm	Sa	Day of series	Mf	MSf	Mm	Sa	Day of series	Mf	MSf	Mm	Sa
991	6	13	23		1071	4	6	20←		1151	3←	23	18	
992	7	14	0←		1072	5	7	21	22	1152	3	0	19	
993	8	15←	0		1073	6	8←	22	23	1153	4	1←	20	
994	9	15	1		1074	7	8	23		1154	5	1	21	
995	10←	16	2		1075	8	9	0		1155	6	2	22	
996	10	17	3	17	1076	9	10	1		1156	7	3	22←	
997	11	18	4	18	1077	10←	11	2←		1157	8	4	23	
998	12	19←	5		1078	10	12←	2		1158	9	5	0	
999	13	19	6		1079	11	12	3		1159	10	6	1	
1000	14	20	7		1080	12	13	4		1160	11	6←	2	
1001	15	21	7←		1081	13	14	5		1161	11←	7	3	
1002	16	22	8		1082	14	15	6		1162	12	8	4	
1003	17←	23	9		1083	15	16	7		1163	13	9	5	4
1004	17	0	10		1084	16	17	8		1164	14	10	5←	5
1005	18	0←	11		1085	17	17←	9←		1165	15	10←	6	
1006	19	1	12		1086	18	18	9		1166	16	11	7	
1007	20	2	13		1087	18←	19	10	23	1167	17	12	8	
1008	21	3	14		1088	19	20	11	0	1168	18	13	9	
1009	22	4←	14←		1089	20	21←	12		1169	18←	14←	10	
1010	23	4	15		1090	21	21	13		1170	19	14	11←	
1011	0	5	16	18	1091	22	22	14		1171	20	15	11	
1012	1	6	17	19	1092	23	23	15		1172	21	16	12	
1013	1←	7	18		1093	0	0	16		1173	22	17	13	
1014	2	8←	19		1094	1	1	16←		1174	23	18	14	
1015	3	8	20←		1095	1←	2	17		1175	0	19	15	
1016	4	9	20		1096	2	2←	18		1176	1←	19←	16	
1017	5	10	21		1097	3	3	19		1177	1	20	17	
1018	6	11	22		1098	4	4	20		1178	2	21	18←	5
1019	7	12	23		1099	5	5	21		1179	3	22	18	6
1020	8	13	0		1100	6	6	22		1180	4	23	19	
1021	8←	13←	1		1101	7	6←	23		1181	5	23←	20	
1022	9	14	2		1102	8←	7	23←	0	1182	6	0	21	
1023	10	15	3←		1103	8	8	0	1	1183	7	1	22	
1024	11	16	3		1104	9	9	1		1184	8←	2	23	
1025	12	17←	4		1105	10	10←	2		1185	8	3←	0	
1026	13	17	5	19	1106	11	10	3		1186	9	3	1	
1027	14	18	6	20	1107	12	11	4		1187	10	4	1←	
1028	15←	19	7		1108	13	12	5←		1188	11	5	2	
1029	15	20	8		1109	14	13	5		1189	12	6	3	
1030	16	21←	9		1110	15←	14	6		1190	13	7	4	
1031	17	21	10		1111	15	15	7		1191	14	8	5	
1032	18	22	10←		1112	16	15←	8		1192	15	8←	6	
1033	19	23	11		1113	17	16	9		1193	16	9	7	6
1034	20	0	12		1114	18	17	10		1194	16←	10	8	7
1035	21	1	13		1115	19	18	11		1195	17	11	8←	
1036	22←	2	14		1116	20	19	12←		1196	18	12	9	
1037	22	2←	15		1117	21	19←	12		1197	19	12←	10	
1038	23	3	16		1118	22	20	13	1	1198	20	13	11	
1039	0	4	17		1119	23	21	14	2	1199	21	14	12	
1040	1	5	17←		1120	23←	22	15		1200	22	15	13	
1041	2	6←	18	20	1121	0	23←	16		1201	23	16←	14←	
1042	3	6	19	21	1122	1	23	17		1202	23←	16	14	
1043	4	7	20		1123	2	0	18		1203	0	17	15	
1044	5←	8	21		1124	3	1	19		1204	1	18	16	
1045	5	9	22		1125	4	2	19←		1205	2	19	17	
1046	6	10←	23←		1126	5	3	20		1206	3	20	18	
1047	7	10	23		1127	6	4	21		1207	4	21	19	
1048	8	11	0		1128	6←	4←	22		1208	5	21←	20	7
1049	9	12	1		1129	7	5	23		1209	6	22	21←	8
1050	10	13	2		1130	8	6	0		1210	6←	23	21	
1051	11	14	3		1131	9	7	1		1211	7	0	22	
1052	12	15	4		1132	10	8	2		1212	8	1	23	
1053	13	15←	5		1133	11	8←	2←	2	1213	9	1←	0	
1054	13←	16	6←		1134	12	9	3	3	1214	10	2	1	
1055	14	17	6		1135	13	10	4		1215	11	3	2	
1056	15	18	7		1136	13←	11	5		1216	12	4	3	
1057	16	19←	8	21	1137	14	12←	6		1217	13←	5←	4	
1058	17	19	9	22	1138	15	12	7		1218	13	5	4←	
1059	18	20	10		1139	16	13	8←		1219	14	6	5	
1060	19	21	11		1140	17	14	8		1220	15	7	6	
1061	20	22	12		1141	18	15	9		1221	16	8	7	
1062	20←	23←	13		1142	19	16	10		1222	17	9	8	
1063	21	23	13←		1143	20←	17	11		1223	18	10	9	8
1064	22	0	14		1144	20	17←	12		1224	19	10←	10	9
1065	23	1	15		1145	21	18	13		1225	20←	11	11	
1066	0	2	16		1146	22	19	14		1226	20	12	11←	
1067	1	3	17		1147	23	20	15←		1227	21	13	12	
1068	2	4	18		1148	0	21	15	3	1228	22	14	13	
1069	3←	4←	19		1149	1	21←	16	4	1229	23	14←	14	
1070	3	5	20		1150	2	22	17		1230	0	15	15	

TABLE 43.—*For the summation of long-period tides*—Continued.

Day of series	Mf	MSf	Mm	Sa	Day of series	Mf	MSf	Mm	Sa	Day of series	Mf	MSf	Mm	Sa
1231	1	16	16		1311	23	9	13←		1391	21←	2	11	19
1232	2	17	17←		1312	0	10	14		1392	22	3	12	20
1233	3	18←	17		1313	1	11←	15		1393	23	4	13	
1234	4	18	18		1314	2	11	16	14	1394	0	5	14	
1235	4←	19	19		1315	3	12	17	15	1395	1	5←	15←	
1236	5	20	20		1316	4	13	18		1396	2	6	15	
1237	6	21	21		1317	4←	14	19		1397	3	7	16	
1238	7	22	22	9	1318	5	15	20		1398	4←	8	17	
1239	8	23	23	10	1319	6	16	20←		1399	4	9	18	
1240	9	23←	0←		1320	7	16←	21		1400	5	9←	19	
1241	10	0	0		1321	8	17	22		1401	6	10	20	
1242	11	1	1		1322	9	18	23		1402	7	11	21	
1243	11←	2	2		1323	10	19	0		1403	8	12	22	
1244	12	3←	3		1324	11←	20←	1		1404	9	13←	22←	
1245	13	3	4		1325	11	20	2←		1405	10	13	23	
1246	14	4	5		1326	12	21	2		1406	11←	14	0	20
1247	15	5	6		1327	13	22	3		1407	11	15	1	21
1248	16	6	7		1328	14	23	4		1408	12	16	2	
1249	17	7←	7←		1329	15	0←	5		1409	13	17	3	
1250	18←	7	8		1330	16	0	6	15	1410	14	18	4	
1251	18	8	9		1331	17	1	7	16	1411	15	18←	5	
1252	19	9	10		1332	18	2	8		1412	16	19	5←	
1253	20	10	11		1333	19	3	9←		1413	17	20	6	
1254	21	11	12	10	1334	19←	4	9		1414	18	21	7	
1255	22	12	13	11	1335	20	5	10		1415	19	22	8	
1256	23	12←	14		1336	21	5←	11		1416	19←	22←	9	
1257	0	13	14←		1337	22	6	12		1417	20	23	10	
1258	1←	14	15		1338	23	7	13		1418	21	0	11←	
1259	1	15	16		1339	0	8	14		1419	22	1	11	
1260	2	16←	17		1340	1	9←	15		1420	23	2←	12	
1261	3	16	18		1341	2	9	16		1421	0	2	13	21
1262	4	17	19		1342	2←	10	16←		1422	1	3	14	22
1263	5	18	20←		1343	3	11	17		1423	2	4	15	
1264	6	19	20		1344	4	12	18		1424	2←	5	16	
1265	7	20←	21		1345	5	13←	19	16	1425	3	6	17	
1266	8	20	22		1346	6	13	20	17	1426	4	7	18←	
1267	9	21	23		1347	7	14	21		1427	5	7←	18	
1268	9←	22	0		1348	8	15	22		1428	6	8	19	
1269	10	23	1	11	1349	9	16	23		1429	7	9	20	
1270	11	0	2	12	1350	9←	17	23←		1430	8	10	21	
1271	12	1	3←		1351	10	18	0		1431	9←	11	22	
1272	13	1←	3		1352	11	18←	1		1432	9	11←	23	
1273	14	2	4		1353	12	19	2		1433	10	12	0	
1274	15	3	5		1354	13	20	3		1434	11	13	1	
1275	16	4	6		1355	14	21	4		1435	12	14	1←	
1276	16←	5←	7		1356	15	22←	5←		1436	13	15←	2	22
1277	17	5	8		1357	16←	22	5		1437	14	15	3	23
1278	18	6	9		1358	16	23	6		1438	15	16	4	
1279	19	7	10		1359	17	0	7		1439	16←	17	5	
1280	20	8	10←		1360	18	1	8	17	1440	16	18	6	
1281	21	9←	11		1361	19	2←	9	18	1441	17	19	7	
1282	22	9	12		1362	20	2	10		1442	18	20	8	
1283	23←	10	13		1363	21	3	11		1443	19	20←	8←	
1284	23	11	14	12	1364	22	4	12←		1444	20	21	9	
1285	0	12	15	13	1365	23←	5	12		1445	21	22	10	
1286	1	13	16		1366	23	6	13		1446	22	23	11	
1287	2	14	17		1367	0	7	14		1447	23	0	12	
1288	3	14←	17←		1368	1	7←	15		1448	0	0←	13	
1289	4	15	18		1369	2	8	16		1449	0←	1	14←	
1290	5	16	19		1370	3	9	17		1450	1	2	14	
1291	6←	17	20		1371	4	10	18		1451	2	3	15	23
1292	6	18←	21		1372	5	11←	19		1452	3	4←	16	0
1293	7	18	22		1373	6	11	19←		1453	4	4	17	
1294	8	19	23←		1374	7	12	20		1454	5	5	18	
1295	9	20	23		1375	7←	13	21	18	1455	6	6	19	
1296	10	21	0		1376	8	14	22	19	1456	7	7	20	
1297	11	22←	1		1377	9	15	23		1457	7←	8	21←	
1298	12	22	2		1378	10	16	0		1458	8	9	21	
1299	13←	23	3	13	1379	11	16←	1		1459	9	9←	22	
1300	13	0	4	14	1380	12	17	2		1460	10	10	23	
1301	14	1	5		1381	13	18	2←		1461	11	11	0	
1302	15	2	6←		1382	14	19	3						
1303	16	3	6		1383	14←	20	4						
1304	17	3←	7		1384	15	20←	5						
1305	18	4	8		1385	16	21	6						
1306	19	5	9		1386	17	22	7						
1307	20	6	10		1387	18	23	8←						
1308	21	7←	11		1388	19	0←	8						
1309	21←	7	12		1389	20	0	9						
1310	22	8	13		1390	21	1	10						

TABLE 44.—*Acceleration in* HW *and* LW *of*

[The amplitude of the semidiurnal wave is taken as unity.]

	HW phase.* LW phase.*	0° 180	10° 190	20° 200	30° 210	40° 220	50° 230	60° 240	70° 250	80° 260	90° 270
		° ′	° ′	° ′	° ′	° ′	° ′	° ′	° ′	° ′	° ′
Amplitude of diurnal wave.	0·0	0 00	0 00	0 00	0 00	0 00	0 00	0 00	0 00	0 00	0 00
	0·1	0 00	0 29	0 57	1 24	1 48	2 10	2 27	2 40	2 49	2 52
	0·2	0 00	0 57	1 52	2 45	3 33	4 15	4 50	5 19	5 36	5 44
	0·3	0 00	1 23	2 45	4 02	5 14	6 17	7 11	7 53	8 22	8 36
	0·4	0 00	1 49	3 35	5 16	6 51	8 15	9 28	10 26	11 07	11 29
	0·5	0 00	2 13	4 23	6 28	8 24	10 10	11 41	12 56	13 50	14 22
	0·6	0 00	2 36	5 09	7 37	9 55	12 03	13 52	15 24	16 33	17 15
	0·7	0 00	2 58	5 53	8 43	11 23	13 50	16 00	17 50	19 15	20 09
	0·8	0 00	3 19	6 36	9 46	12 48	15 35	18 06	20 14	21 56	23 04
	0·9	0 00	3 40	7 17	10 48	14 09	17 18	20 09	22 37	24 36	26 00
	1·0	0 00	4 00	7 56	11 47	15 29	18 58	22 09	24 57	27 16	28 57
	1·1	0 00	4 18	8 34	12 44	16 46	20 35	24 06	27 15	29 55	31 55
	1·2	0 00	4 36	9 10	13 39	18 00	22 09	26 01	29 32	32 33	34 55
	1·3	0 00	4 54	9 46	14 33	19 12	23 41	27 54	31 46	35 11	37 56
	1·4	0 00	5 11	10 20	15 24	20 22	25 10	29 44	34 00	37 48	40 58
	1·5	0 00	5 27	10 52	16 14	21 30	26 37	31 33	36 11	40 24	44 03
	1·6	0 00	5 43	11 24	17 02	22 36	28 02	33 18	38 20	43 00	47 09
	1·7	0 00	5 58	11 53	17 49	23 40	29 25	35 02	40 28	45 36	50 18
	1·8	0 00	6 12	12 24	18 34	24 41	30 45	36 43	42 34	48 11	53 29
	1·9	0 00	6 26	12 52	19 18	25 42	32 04	38 23	44 38	50 46	56 43
	2·0	0 00	6 40	13 20	20 00	26 40	33 20	40 00	46 40	53 20	60 00
	2·1	0 00	6 53	13 47	20 41	27 37	34 34	41 35	48 40	55 54	63 20
	2·2	0 00	7 06	14 13	21 21	28 32	35 47	43 08	50 39	58 27	66 44
	2·3	0 00	7 18	14 38	22 00	29 25	36 57	44 39	52 36	60 59	70 12
	2·4	0 00	7 30	15 02	22 37	30 17	38 06	46 08	54 32	63 31	73 44
	2·5	0 00	7 42	15 26	23 13	31 08	39 13	47 36	56 25	66 03	77 22
	2·6	0 00	7 53	15 48	23 49	31 57	40 18	49 01	58 16	68 33	81 05
	2·7	0 00	8 04	16 11	24 23	32 45	41 22	50 24	60 08	71 03	84 54
	2·8	0 00	8 15	16 32	24 56	33 32	42 22	51 45	61 54	73 32	88 51
	2·9	0 00	8 25	16 53	25 29	34 17	43 25	53 05	63 39	76 00	92 56
	3·0	0 00	8 35	17 14	26 00	35 01	44 22	54 22	65 23	78 26	97 11
	3·1	0 00	8 44	17 33	26 31	35 44	45 21	55 38	67 05	80 52	101 36
	3·2	0 00	8 54	17 52	27 01	36 26	46 17	56 53	68 45	83 16	106 15
	3·3	0 00	9 03	18 11	27 30	37 06	47 12	58 05	70 23	85 39	111 11
	3·4	0 00	9 12	18 30	27 56	37 46	48 05	59 16	71 58	87 59	116 25
	3·5	0 00	9 21	18 47	28 26	38 25	48 57	60 25	73 32	90 19	122 05
	3·6	0 00	9 29	19 05	28 53	39 01	49 47	61 30	75 04	92 35	128 19
	3·7	0 00	9 38	19 22	29 19	39 39	50 37	62 38	76 34	94 49	135 21
	3·8	0 00	9 46	19 38	29 44	40 14	51 25	63 42	78 02	97 01	143 37
	3·9	0 00	9 53	19 54	30 09	40 49	52 12	64 44	79 27	99 10	154 19
	4·0	0 00	10 01	20 09	30 33	41 23	52 58	65 45	80 50	101 16	180 00
	HW Phase. LW Phase.	360° 180	350° 170	340° 160	330° 150	320° 140	310° 130	300° 120	290° 110	280° 100	270° 90

*I. e., the phase of the diurnal wave (B) at the time of HW or LW of the semidiurnal wave (A).

HW phase = (time of HW of A − time of HW of B) b,
LW phase = (time of LW of A − time of LW of B) b.

If one of the speeds be somewhat variable, the resultant times and heights will be given more accurately by keeping the phases between − 90° and + 90°. If they do not fall within these limits, this and the following table may be entered with the phases:

HW phase = (time of LW of A − time of LW of B) b,
LW phase = (time of HW of A − time of LW of B) b;

the resultant heights must, however, have their signs changed. For tropic tides

$$\text{HW phase} = n\pi + \tfrac{1}{2}A^\circ - B^\circ, \quad \text{LW phase} = n\pi \pm \frac{\pi}{2} + \tfrac{1}{2}A^\circ - B^\circ,$$

n being an integer. (See §§ 5, 20, Part III.)

a semidiurnal wave due to a diurnal wave.

[The amplitude of the semidiurnal wave is taken as unity.]

HW Phase. LW Phase.	100° 280	110° 290	120° 300	130° 310	140° 320	150° 330	160° 340	170° 350	180° 360	
	° ′	° ′	° ′	° ′	° ′	° ′	° ′	° ′	° ′	
0·0	0 00	0 00	0 00	0 00	0 00	0 00	0 00	0 00	0 00	
0·1	2 50	2 43	2 31	2 14	1 53	1 28	1 00	0 31	0 00	
0·2	5 42	5 29	5 05	4 32	3 50	3 00	2 03	1 03	0 00	
0·3	8 35	8 18	7 44	6 55	5 52	4 36	3 09	1 37	0 00	
0·4	11 30	11 10	10 28	9 24	7 59	6 17	4 20	2 12	0 00	
0·5	14 28	14 06	13 16	11 58	10 12	8 02	5 33	2 50	0 00	
0·6	17 27	17 06	16 10	14 38	12 31	9 54	6 51	3 30	0 00	
0·7	20 29	20 10	19 09	17 24	14 57	11 51	8 13	4 13	0 00	
0·8	23 34	23 19	22 14	20 18	17 30	13 55	9 40	4 58	0 00	
0·9	26 42	26 33	25 27	23 20	20 12	16 06	11 13	5 45	0 00	
1·0	29 53	29 52	28 47	26 31	23 03	18 26	12 52	6 36	0 00	
1·1	33 07	33 18	32 16	29 53	26 04	20 54	14 37	7 31	0 00	
1·2	36 26	36 51	35 56	33 27	29 18	23 34	16 30	8 29	0 00	
1·3	39 49	40 32	39 47	37 15	32 46	26 26	18 32	9 32	0 00	
1·4	43 17	44 23	43 52	41 21	36 33	29 32	20 43	10 40	0 00	
1·5	46 51	48 24	48 15	45 48	40 40	32 56	23 07	11 53	0 00	
1·6	50 31	52 40	52 59	50 43	45 17	36 43	25 44	13 13	0 00	
1·7	54 19	57 11	58 12	56 17	50 32	40 59	28 38	14 40	0 00	
1·8	58 15	62 03	64 05	62 53	56 48	45 55	31 53	16 16	0 00	
1·9	62 21	67 22	71 01	71 19	64 57	51 56	35 39	18 02	0 00	
2·0	66 40	73 20	80 00	86 40	80 00	60 00	40 00	20 00	0 00	
2·1	71 14	80 18					45 24	22 13	0 00	
2·2	76 07	89 14					52 48	24 45	0 00	
2·3	81 25							27 44	0 00	
2·4	87 18							31 17	0 00	
2·5	94 08							35 47	0 00	
2·6	102 48							42 08	0 00	
2·7									0 00	
2·8									0 00	
2·9									0 00	
3·0									0 00	
3·1									0 00	
3·2									0 00	
3·3									0 00	
3·4									0 00	
3·5									0 00	
3·6									0 00	
3·7									0 00	
3·8									0 00	
3·9									0 00	
4·0									0 00	
HW Phase. LW Phase.	260° 80	250° 70	240° 60	230° 50	220° 40	210° 30	200° 20	190° 10	180° 0	

Amplitude of diurnal wave.

When the top argument is used the tabular values are positive; when the bottom argument, they are negative.

To express the acceleration in time divide by a, the speed of the semidiurnal component.

To find the acceleration when b is not exactly equal to $\frac{1}{2}a$, multiply the tabular values by $\frac{2b}{a}$.

This acceleration is directly expressed in time by multiplying the tabular values by $\frac{2b}{a^2}$.

Table 17 is a graphic form of this table.

Rollet de l'Isle has given in the Annales Hydrographique for 1896 (p. 248) a graphic table serving the purpose of Tables 17, 18, or Tables 44, 45, and which he calls an abacus. It is really the inverse of Tables 17, 18.

TABLE 45.—*Height of* HW *and* LW *for a tide*

[The amplitude of the semidiurnal wave is taken as unity.]

HW Phase.* / LW Phase.*	0° / 180	10° / 190	20° / 200	30° / 210	40° / 220	50° / 230	60° / 240	70° / 250	80° / 260	90° / 270
Amplitude of diurnal wave.										
0.0	1.0000	1.0000	1.0000	1.0000	1.0000	1.0000	1.0000	1.0000	1.0000	1.0000
0.1	1.1000	1.0985	1.0941	1.0869	1.0771	1.0650	1.0509	1.0353	1.0186	1.0012
0.2	1.2000	1.1971	1.1885	1.1744	1.1552	1.1314	1.1039	1.0727	1.0395	1.0050
0.3	1.3000	1.2958	1.2831	1.2624	1.2342	1.1991	1.1581	1.1123	1.0629	1.0112
0.4	1.4000	1.3945	1.3780	1.3510	1.3141	1.2681	1.2143	1.1539	1.0885	1.0200
0.5	1.5000	1.4932	1.4731	1.4401	1.3948	1.3384	1.2721	1.1975	1.1165	1.0312
0.6	1.6000	1.5921	1.5684	1.5296	1.4763	1.4098	1.3314	1.2430	1.1467	1.0450
0.7	1.7000	1.6908	1.6639	1.6195	1.5585	1.4822	1.3922	1.2904	1.1792	1.0612
0.8	1.8000	1.7899	1.7596	1.7099	1.6415	1.5558	1.4545	1.3397	1.2139	1.0800
0.9	1.9000	1.8888	1.8555	1.8006	1.7253	1.6304	1.5182	1.3908	1.2508	1.1012
1.0	2.0000	1.9878	1.9515	1.8917	1.8094	1.7059	1.5832	1.4436	1.2898	1.1250
1.1	2.1000	2.0869	2.0477	1.9832	1.8942	1.7824	1.6496	1.4982	1.3309	1.1512
1.2	2.2000	2.1860	2.1440	2.0749	1.9797	1.8598	1.7172	1.5544	1.3741	1.1800
1.3	2.3000	2.2851	2.2405	2.1670	2.0656	1.9380	1.7860	1.6122	1.4194	1.2112
1.4	2.4000	2.3842	2.3371	2.2594	2.1522	2.0170	1.8560	1.6716	1.4668	1.2450
1.5	2.5000	2.4834	2.4339	2.3520	2.2392	2.0970	1.9271	1.7325	1.5161	1.2812
1.6	2.6000	2.5826	2.5307	2.4450	2.3266	2.1774	1.9993	1.7949	1.5673	1.3200
1.7	2.7000	2.6818	2.6276	2.5382	2.4145	2.2586	2.0725	1.8588	1.6206	1.3612
1.8	2.8000	2.7811	2.7247	2.6316	2.5029	2.3406	2.1468	1.9241	1.6757	1.4050
1.9	2.9000	2.8804	2.8219	2.7252	2.5917	2.4232	2.2220	1.9908	1.7327	1.4512
2.0	3.0000	2.9797	2.9191	2.8191	2.6809	2.5065	2.2981	2.0587	1.7915	1.5000
2.1	3.1000	3.0790	3.0165	2.9132	2.7704	2.5903	2.3752	2.1280	1.8521	1.5512
2.2	3.2000	3.1784	3.1139	3.0074	2.8604	2.6747	2.4531	2.1985	1.9144	1.6050
2.3	3.3000	3.2778	3.2114	3.1019	2.9506	2.7597	2.5318	2.2702	1.9785	1.6612
2.4	3.4000	3.3772	3.3090	3.1965	3.0412	2.8452	2.6114	2.3431	2.0443	1.7200
2.5	3.5000	3.4766	3.4067	3.2913	3.1321	2.9312	2.6917	2.4171	2.1117	1.7812
2.6	3.6000	3.5760	3.5044	3.3863	3.2233	3.0177	2.7728	2.4922	2.1808	1.8450
2.7	3.7000	3.6755	3.6023	3.4814	3.3148	3.1047	2.8545	2.5683	2.2514	1.9112
2.8	3.8000	3.7749	3.7002	3.5767	3.4065	3.1921	2.9370	2.6455	2.3234	1.9800
2.9	3.9000	3.8744	3.7981	3.6721	3.4985	3.2800	3.0201	2.7236	2.3970	2.0512
3.0	4.0000	3.9739	3.8961	3.7677	3.5908	3.3682	3.1038	2.8027	2.4721	2.1250
3.1	4.1000	4.0734	3.9941	3.8634	3.6833	3.4569	3.1882	2.8827	2.5485	2.2012
3.2	4.2000	4.1730	4.0922	3.9592	3.7760	3.5459	3.2731	2.9636	2.6262	2.2800
3.3	4.3000	4.2725	4.1904	4.0552	3.8690	3.6353	3.3586	3.0452	2.7053	2.3612
3.4	4.4000	4.3720	4.2886	4.1512	3.9622	3.7250	3.4446	3.1277	2.7856	2.4450
3.5	4.5000	4.4716	4.3869	4.2474	4.0556	3.8151	3.5311	3.2110	2.8671	2.5312
3.6	4.6000	4.5712	4.4852	4.3437	4.1492	3.9055	3.6181	3.2950	2.9500	2.6200
3.7	4.7000	4.6708	4.5836	4.4401	4.2429	3.9962	3.7056	3.3797	3.0334	2.7112
3.8	4.8000	4.7704	4.6820	4.5366	4.3369	4.0872	3.7936	3.4652	3.1182	2.8050
3.9	4.9000	4.8699	4.7804	4.6331	4.4310	4.1785	3.8820	3.5512	3.2039	2.9012
4.0	5.0000	4.9695	4.8789	4.7298	4.5253	4.2701	3.9708	3.6379	3.2906	3.0000
HW Phase. / LW Phase.	360° / 180°	350° / 170°	340° / 160°	330° / 150°	320° / 140°	310° / 130°	300° / 120°	290° / 110°	280° / 100°	270° / 90°

* See footnote, preceding table.

For high waters use the tabular values as given; but for low waters, alter their signs.

composed of a diurnal and semidiurnal wave.

[The amplitude of the semidiurnal wave is taken as unity.]

HW Phase. LW Phase.	100° 280	110° 290	120° 300	130° 310	140° 320	150° 330	160° 340	170° 350	180° 360	Mean value.†
Amplitude of diurnal wave. 0·0	1·0000	1·0000	1·0000	1·0000	1·0000	1·0000	1·0000	1·0000	1·0000	1·0000
0·1	0·9839	0·9669	0·9510	0·9365	0·9238	0·9137	0·9062	0·9016	0·9000	1·0006
0·2	0·9702	0·9361	0·9038	0·8745	0·8489	0·8281	0·8127	0·8032	0·8000	1·0025
0·3	0·9590	0·9076	0·8587	0·8141	0·7751	0·7432	0·7195	0·7049	0·7000	1·0056
0·4	0·9503	0·8815	0·8158	0·7554	0·7025	0·6591	0·6267	0·6067	0·6000	1·0100
0·5	0·9442	0·8578	0·7750	0·6986	0·6313	0·5758	0·5342	0·5087	0·5000	1·0157
0·6	0·9406	0·8367	0·7365	0·6436	0·5614	0·4933	0·4423	0·4107	0·4000	1·0226
0·7	0·9397	0·8181	0·7004	0·5906	0·4932	0·4118	0·3508	0·3129	0·3000	1·0308
0·8	0·9415	0·8023	0·6667	0·5397	0·4262	0·3314	0·2598	0·2152	0·2000	1·0404
0·9	0·9460	0·7891	0·6357	0·4911	0·3612	0·2521	0·1693	0·1174	0·1000	1·0513
1·0	0·9532	0·7789	0·6074	0·4448	0·2980	0·1739	0·0794	0·0202	0·0000	1·0635
1·1	0·9632	0·7715	0·5819	0·4012	0·2368	0·0971	−0·0098	−0·0770	−0·1000	1·0772
1·2	0·9760	0·7672	0·5595	0·3602	0·1778	0·0213	−0·0982	−0·1740	−0·2000	1·0921
1·3	0·9919	0·7661	0·5403	0·3223	0·1212	−0·0520	−0·1859	−0·2709	−0·3000	1·1088
1·4	1·0105	0·7682	0·5245	0·2874	0·0672	−0·1239	−0·2727	−0·3674	−0·4000	1·1268
1·5	1·0322	0·7738	0·5123	0·2561	0·0161	−0·1939	−0·3584	−0·4637	−0·5000	1·1465
1·6	1·0569	0·7830	0·5041	0·2287	−0·0326	−0·2616	−0·4429	−0·5597	−0·6000	1·1677
1·7	1·0848	0·7959	0·5002	0·2058	−0·0756	−0·3266	−0·5264	−0·6554	−0·7000	1·1909
1·8	1·1159	0·8129	0·5012	0·1879	−0·1151	−0·3886	−0·6082	−0·7506	−0·8000	1·2160
1·9	1·1504	0·8343	0·5077	0·1765	−0·1487	−0·4468	−0·6882	−0·8454	−0·9000	1·2433
2·0	1·1882	0·8604	0·5210	0·1744	−0·1736	−0·5000	−0·7660	−0·9397	−1·0000	1·2732
2·1	1·2296	0·8919					−0·8412	−1·0333	−1·1000	
2·2	1·2748	0·9298					−0·9126	−1·1262	−1·2000	
2·3	1·3238							−1·2182	−1·3000	
2·4	1·3770							−1·3090	−1·4000	
2·5	1·4348							−1·3984	−1·5000	
2·6	1·4979							−1·4855	−1·6000	
2·7									−1·7000	
2·8									−1·8000	
2·9									−1·9000	
3·0									−2·0000	
3·1									−2·1000	
3·2									−2·2000	
3·3									−2·3000	
3·4									−2·4000	
3·5									−2·5000	
3·6									−2·6000	
3·7									−2·7000	
3·8									−2·8000	
3·9									−2·9000	
4·0									−3·0000	
HW Phase. LW Phase.	260° 80°	250° 70°	240° 60°	230° 50°	220° 40°	210° 30°	200° 20°	190° 10°	180° 0°	

† When b is not exactly equal to $\frac{1}{2}a$, mean value $= 1 + (\text{tabular value} - 1)\frac{4b^2}{a^2}$.

Table 18 is a graphic form of this table.

The above column of mean values may be compared with expression (29), Part III, and with the last column of Table 21.

TABLE 46.—*Hyperbolic functions.*

u		v		θ	sinh u	cosh u	tanh u	e^u	e^{-u}
	In degrees.		In degrees.		$=\tan v$	$=\sec v$	$=\sin v$		
	°		°	°					
0·00	0·000000	0·0000	0·0000	0·000	0·0000	1·0000	0·0000	1·0000	1·0000
0·02	1·1459156	0·0200	1·1458	1·145	0·0200	1·0002	0·0200	1·0202	0·9802
0·04	2·291831	0·0400	2·2912	2·288	0·0400	1·0008	0·0400	1·0408	0.9608
0·06	3·437747	0·0600	3·4357	3·428	0·0600	1·0018	0·0599	1·0618	0·9418
0·08	4·58366	0·0799	4·5788	4·561	0·0801	1·0032	0·0798	1·0833	0·9231
0·10	5·72958	0·0998	5·720	5·693	0.1002	1·0050	0·0997	1·1052	0·9048
0·12	6·87549	0·1197	6·859	6·811	0·1203	1·0072	0·1194	1·1275	0·8869
0·14	8·02141	0·1395	7·995	7·917	0·1405	1·0098	0·1391	1·1503	0·8694
0·16	9·16732	0·1593	9·128	9·011	0·1607	1·0128	0·1586	1·1735	0·8521
0·18	10·3132	0·1790	10·258	10·100	0·1810	1·0162	0·1781	1·1972	0·8353
0·20	11·4592	0·1987	11·384	11·167	0·2013	1·0201	0·1974	1·2214	0·8187
0·22	12·6051	0·2183	12·505	12·216	0·2218	1·0243	0·2165	1·2461	0·8025
0·24	13·7510	0·2377	13·621	13·254	0·2423	1·0289	0·2355	1·2712	0·7866
0·26	14·8969	0·2571	14·732	14·271	0·2629	1·0340	0·2543	1·2969	0·7711
0·28	16·0428	0·2764	15·837	15·265	0·2837	1·0395	0·2729	1·3231	0·7558
0·30	17·1887	0·2956	16·937	16·245	0·3045	1·0453	0·2913	1·3499	0·7408
0·32	18·3346	0·3147	18·030	17·197	0·3255	1·0516	0·3095	1·3771	0·7261
0·34	19·4806	0·3336	19·116	18·134	0·3466	1·0584	0·3275	1·4049	0·7118
0·36	20·6265	0·3525	20·195	19·045	0·3678	1·0655	0·3452	1·4333	0·6977
0·38	21·7724	0·3712	21·267	19·935	0·3892	1·0731	0·3627	1·4623	0·6839
0·40	22·9183	0·3894	22·331	20·801	0·4108	1·0811	0·3799	1·4918	0·6703
0·42	24·0642	0·4082	23·386	21·648	0·4325	1·0895	0·3969	1·5220	0·6570
0·44	25·2101	0·4264	24·434	22·470	0·4543	1·0984	0·4136	1·5527	0·6440
0·46	26·3561	0·4446	25·473	23·275	0·4764	1·1077	0·4301	1·5841	0·6313
0·48	27·5020	0·4626	26·503	24·045	0·4986	1·1174	0·4462	1·6161	0·6188
0·50	28·6479	0·4804	27·524	24·803	0·5211	1·1276	0·4621	1·6487	0·6065
0·52	29·7938	0·4980	28·535	25·533	0·5438	1·1383	0·4777	1·6820	0·5945
0·54	30·9397	0·5155	29·537	26·245	0·5666	1·1494	0·4930	1·7160	0·5827
0·56	32·0856	0·5328	30·529	26·930	0·5897	1·1609	0·5080	1·7507	0·5712
0·58	33·2316	0·5500	31·511	27·595	0·6131	1·1730	0·5227	1·7860	0·5599
0·60	34·3775	0·5669	32·483	28·237	0·6367	1·1855	0·5370	1·8221	0·5488
0·62	35·5234	0·5837	33·444	28·861	0·6605	1·1984	0·5511	1·8589	0·5379
0·64	36·6693	0·6003	34·395	29·462	0·6846	1·2119	0·5649	1·8965	0·5273
0·66	37·8152	0·6167	35·336	30·045	0·7090	1·2258	0·5784	1·9348	0·5169
0·68	38·9611	0·6329	36·265	30·604	0·7336	1·2402	0·5915	1·9739	0·5066
0·70	40·1070	0·6489	37·183	31·149	0·7586	1·2552	0·6044	2·0138	0·4966
0·72	41·2530	0·6648	38·091	31·670	0·7838	1·2706	0·6169	2·0544	0·4868
0·74	42·3989	0·6804	38·987	32·174	0·8094	1·2865	0·6291	2·0959	0·4771
0·76	43·5448	0·6958	39·872	32·663	0·8353	1·3030	0·6411	2·1383	0·4677
0·78	44·6907	0·7111	40·746	33·132	0·8615	1·3199	0·6527	2·1815	0·4584
0·80	45·8366	0·7261	41·608	33·587	0·8881	1·3374	0·6640	2·2255	0·4493
0·82	46·9825	0·7412	42·460	34·025	0·9150	1·3555	0·6751	2·2705	0·4404
0·84	48·1285	0·7557	43·299	34·446	0·9423	1·3740	0·6858	2·3164	0·4317
0·86	49·2744	0.7702	44·128	34·848	0·9700	1·3932	0·6963	2·3632	0·4232
0·88	50·4203	0·7844	44·944	35·238	0·9981	1·4128	0·7064	2·4109	0·4148
0·90	51·5662	0·7985	45·750	35·613	1·0265	1·4331	0·7163	2·4596	0·4066
0·92	52·7121	0·8123	46·544	35·976	1·0554	1·4539	0·7259	2·5093	0·3985
0·94	53·8580	0·8260	47·326	36·323	1·0847	1·4753	0·7352	2·5600	0·3906
0·96	55·0039	0·8394	48·097	36·660	1·1144	1·4973	0·7443	2·6117	0·3829
0·98	56·1499	0·8528	48·857	36·983	1·1446	1·5199	0·7531	2·6645	0·3753
1·00	57·2958	0·8658	49·605	37·293	1·1752	1·5431	0·7616	2·7183	0·3679
1·02	58·4417	0·8787	50·343	37·593	1·2063	1·5669	0·7699	2·7732	0·36059
1·04	59·5876	0·8913	51·069	37·880	1·2379	1·5913	0·7779	2·8292	0·35345
1·06	60·7335	0·9038	51·783	38·158	1·2700	1·6164	0·7857	2·8864	0·34646
1·08	61·8794	0·9160	52·485	38·423	1·3025	1·6421	0·7932	2·9447	0·33960
1·10	63·0254	0·9281	53·178	38·677	1·3356	1·6685	0·8005	3·0042	0·33287
1·12	64·1713	0·9400	53·860	38·924	1·3693	1·6956	0·8076	3·0649	0·32628
1·14	65·3172	0·9518	54·531	39·160	1·4035	1·7233	0·8144	3·1268	0·31982
1·16	66·4631	0·9632	55·189	39·387	1·4382	1·7517	0·8210	3·1899	0·31349
1·18	67·6090	0·9745	55·837	39·607	1·4735	1·7808	0·8275	3·2544	0·30728
1·20	68·7549	0·9857	56·476	59·817	1·5095	1·8107	0·8337	3·3201	0·30119

θ = the angle at the center of the hyperbola made by any secant line and the transverse axis of the hyperbola.

u = twice the area of the hyperbolic rector thus determined, the length of the semiaxis being unity.

$\tan\theta = \tanh u$.

v = an auxiliary angle called the *gudermanian*,* such that the equations of the hyperbola are $x = \sec v$, $y = \tan v$.

* For representations of this angle and for further particulars concerning hyperbolic functions see Chapter IV, by James McMahon, in Merriman and Woodward's Higher Mathematics; and Hoüel, Recueil de Formules et de Tables numérique. Newman and Glaisher have tabulated e^{-x} and e^x in the Transactions of the Cambridge Phil. Soc., Vol. 13 (1883), III.

TABLE 46.—*Hyperbolic functions*—Continued.

u		v		θ	sinh u	cosh u	tanh u	e^u	e^{-u}
	In degrees.		In degrees.		$=\tan v$	$=\sec v$	$=\sin v$		
	°		°	°					
1·22	69·9009	0·9967	57·103	40·023	1·5460	1·8412	0·8397	3·3872	0·29523
1·24	71·0468	1·0074	57·721	40·215	1·5831	1·8725	0·8455	3·4556	0·28938
1·26	72·1927	1·0180	58·328	40·401	1·6209	1·9045	0·8511	3·5254	0·28365
1·28	73·3386	1·0284	58·925	40·582	1·6593	1·9373	0·8565	3·5966	0·27804
1·30	74·4845	1·0387	59·511	40·753	1·6984	1·9709	0·8617	3·6693	0·27253
1·32	75·6304	1·0490	60·087	40·920	1·7381	2·0053	0·8668	3·7434	0·26714
1·34	76·7763	1·0586	60·654	41·080	1·7786	2·0404	0·8717	3·8190	0·26185
1·36	77·9223	1·0684	61·212	41·232	1·8198	2·0764	0·8764	3·8962	0·25666
1·38	79·0682	1·0779	61·758	41·380	1·8617	2·1132	0·8810	3·9749	0·25158
1·40	80·2141	1·0873	62·295	41·523	1·9043	2·1509	0·8854	4·0552	0·24660
1·42	81·3600	1·0965	62·823	41·657	1·9477	2·1894	0·8896	4·1371	0·24171
1·44	82·5059	1·1055	63·343	41·788	1·9919	2·2288	0·8937	4·2207	0·23693
1·46	83·6518	1·1145	63·851	41·915	2·0369	2·2691	0·8977	4·3060	0·23224
1·48	84·7978	1·1231	64·351	42·034	2·0827	2·3103	0·9015	4·3929	0·22764
1·50	85·9437	1·1317	64·843	42·148	2·1293	2·3524	0·9051	4·4817	0·22313
1·52	87·0896	1·1402	65·327	42·261	2·1768	2·3955	0·9087	4·5722	0·21871
1·54	88·2355	1·1484	65·800	42·370	2·2251	2·4395	0·9121	4·6646	0·21438
1·56	89·3814	1·1566	66·265	42·473	2·2743	2·4845	0·9154	4·7588	0·21014
1·58	90·5273	1·1646	66·728	42·571	2·3245	2·5305	0·9186	4·8550	0·20598
1·60	91·6732	1·1724	67·171	42·668	2·3756	2·5775	0·9217	4·9530	0·20190
1·62	92·8192	1·1800	67·612	42·756	2·4276	2·6255	0·9246	5·0531	0·19790
1·64	93·9651	1·1876	68·045	42·846	2·4806	2·6746	0·9275	5·1552	0·19398
1·66	95·1110	1·1953	68·469	42·930	2·5346	2·7247	0·9302	5·2593	0·19014
1·68	96·2569	1·2023	68·885	43·013	2·5896	2·7760	0·9329	5·3656	0·18637
1·70	97·4028	1·2094	69·294	43·090	2·6456	2·8283	0·9354	5·4739	0·18268
1·72	98·5487	1·2164	69·696	43·166	2·7027	2·8818	0·9379	5·5845	0·17907
1·74	99·6947	1·2233	70·091	43·233	2·7609	2·9364	0·9402	5·6973	0·17552
1·76	100·8406	1·2300	70·476	43·303	2·8202	2·9922	0·9425	5·8124	0·17204
1·78	101·9865	1·2366	70·856	43·373	2·8806	3·0492	0·9447	5·9299	0·16864
1·80	103·1324	1·2432	71·228	43·433	2·9422	3·1075	0·9468	6·0496	0·16530
1·82	104·2783	1·2495	71·593	43·497	3·0049	3·1669	0·9488	6·1719	0·16203
1·84	105·4242	1·2559	71·952	43·556	3·0689	3·2277	0·9508	6·2965	0·15882
1·86	106·5702	1·2619	72·303	43·615	3·1340	3·2897	0·9527	6·4237	0·15567
1·88	107·7161	1·2680	72·649	43·666	3·2005	3·3530	0·9545	6·5535	0·15259
1·90	108·8620	1·2739	72·987	43·720	3·2682	3·4177	0·9562	6·6859	0·14957
1·92	110·0079	1·2797	73·319	43·770	3·3372	3·4838	0·9579	6·8210	0·14661
1·94	111·1538	1·2854	73·645	43·816	3·4075	3·5512	0·9595	6·9588	0·14370
1·96	112·2997	1·2910	73·966	43·864	3·4792	3·6201	0·9611	7·0993	0·14086
1·98	113·4456	1·2964	74·274	43·910	3·5523	3·6904	0·9626	7·2427	0·13807
2·00	114·5916	1·3017	74·584	43·950	3·6269	3·7622	0·9640	7·3891	0·13534
2·02	115·7375	1·3070	74·886	43·993	3·7028	3·8355	0·9654	7·5383	0·13266
2·04	116·8834	1·3122	75·183	44·032	3·7803	3·9103	0·9667	7·6906	0·13003
2·06	118·0293	1·3173	75·472	44·070	3·8593	3·9867	0·9680	7·8460	0·12745
2·08	119·1752	1·3222	75·758	44·108	3·9398	4·0647	0·9693	8·0045	0·12493
2·10	120·3211	1·3271	76·037	44·145	4·0219	4·1443	0·9705	8·1662	0·12246
2·12	121·4671	1·3319	76·311	44·177	4·1055	4·2256	0·9716	8·3311	0·12003
2·14	122·6130	1·3365	76·578	44·208	4·1909	4·3085	0·9727	8·4994	0·11765
2·16	123·7589	1·3412	76·843	44·239	4·2779	4·3932	0·9737	8·6711	0·11533
2·18	124·9048	1·3457	77·102	44·270	4·3666	4·4797	0·9748	8·8463	0·11304
2·20	126·0507	1·3501	77·354	44·297	4·4571	4·5679	0·9757	9·0250	0·11080
2·22	127·1966	1·3544	77·603	44·327	4·5494	4·6580	0·9767	9·2073	0·10861
2·24	128·3425	1·3587	77·848	44·352	4·6434	4·7499	0·9776	9·3933	0·10646
2·26	129·4885	1·3628	78·084	44·378	4·7394	4·8437	0·9785	9·5831	0·10435
2·28	130·6344	1·3669	78·320	44·402	4·8372	4·9395	0·9793	9·7767	0·10228
2·30	131·7803	1·3710	78·549	44·425	4·9370	5·0372	0·9801	9·9742	0·10026
2·32	132·9262	1·3748	78·773	44·449	5·0387	5·1370	0·9809	10·1757	0·09827
2·34	134·0721	1·3787	78·996	44·469	5·1424	5·2388	0·9816	10·3812	0·09633
2·36	135·2180	1·3825	79·212	44·490	5·2483	5·3427	0·9823	10·5909	0·09442
2·38	136·3640	1·3862	79·425	44·511	5·3562	5·4487	0·9830	10·8049	0·09255
2·40	137·5099	1·3899	79·633	44·532	5·4662	5·5569	0·9837	11·0232	0·09072
2·42	138·6558	1·3934	79·836	44·549	5·5785	5·6674	0·9843	11·2459	0·08892
2·44	139·8017	1·3969	80·037	44·565	5·6929	5·7801	0·9849	11·4730	0·08716
2·46	140·9476	1·4003	80·233	44·582	5·8097	5·8951	0·9855	11·7048	0·08543
2·48	142·0935	1·4037	80·426	44·598	5·9288	6·0125	0·9861	11·9413	0·08374
2·50	143·2394	1·4070	80·615	44·616	6·0502	6·1323	0·9866	12·1825	0·08208
2·60	148·9690	1·4227	81·504	44·683	6·6947	6·7690	0·9890	13·4637	0·07427
2·70	154·6986	1·4366	82·310	44·741	7·4063	7·4735	0·9910	14·8797	0·06721
2·80	160·4282	1·4493	83·040	44·787	8·1919	8·2527	0·9926	16·4446	0·06081
2·90	166·1578	1·4609	83·701	44·828	9·0596	9·1146	0·9940	18·1741	0·05502

TABLE 46.—*Hyperbolic functions*—Continued.

u		v		θ	$\sinh u$	$\cosh u$	$\tanh u$	e^u	e^{-u}
	In degrees.		In degrees.		$=\tan v$	$=\sec v$	$=\sin v$		
	°		°	°					
3·00	171·8873	1·4713	84·301	44·861	10·0179	10·0677	0·9951	20·0855	0·04979
3·10	177·6169	1·4808	84·841	44·883	11·0765	11·1215	0·9959	22·1980	0·04505
3·20	183·3465	1·4894	85·331	44·906	12·2459	12·2866	0·9967	24·5325	0·04076
3·30	189·0761	1·4971	85·775	44·925	13·5379	13·5748	0·9973	27·1126	0·03688
3·40	194·8057	1·5041	86·177	44·936	14·9654	14·9987	0·9978	29·9641	0·03337
3·50	200·5352	1·5104	86·541	44·948	16·5426	16·5728	0·9982	33·1155	0·03020
3·60	206·2648	1·5162	86·870	44·961	18·2854	18·3128	0·9985	36·5982	0·02732
3·70	211·9944	1·5214	87·168	44·966	20·2113	20·2360	0·9988	40·4473	0·02472
3·80	217·7240	1·5261	87·445	44·971	22·3394	22·3618	0·9990	44·7012	0·02237
3·90	223·4535	1·5303	87·681	44·975	24·6911	24·7113	0·9992	49·4024	0·02024
4·00	229·1831	1·5342	87·901	44·980	27·2899	27·3082	0·9993	54·5981	0·01832
5·00	286·4789	1·5573	89·227	44·989	74·202	74·208	0·9999	148·41	0·006738
6·00	343·7747	1·5658	89·716	44·993	201·71	201·72	0·9999	403·43	0·002479
7·00	401·0705	1·5690	89·895	45·000	548·35	548·35	1·0000	1096·6	0·000912
8·00	458·3662	1·5701	89·960	45·000	1490·5	1490·5	1·0000	2981·0	0·000335
9·00	515·6620	1·5705	89·986	45·000	4051·6	4051·6	1·0000	8103·1	0·000123
10·00	572·9578	1·5706	89·995	45·000	11013·2	11013·2	1·0000	22026·5	0·000045
∞	∞	1·5708	90·000	45·000	∞	∞	1·0000	∞	0

$$\sinh u = \frac{e^u - e^{-u}}{2}, \quad \cosh u = \frac{e^u + e^{-u}}{2}, \quad \tanh u = \frac{\sinh u}{\cosh u} = \frac{e^u - e^{-u}}{e^u + e^{-u}}$$

TABLE 47.—*Period of a wave.*

Depth of water (h).	Length of wave in feet (λ).								
	1	10	100	1 000	10 000	100 000	1 000 000	10 000 000	100 000 000
Feet.	*Seconds.*	*Seconds.*	*Seconds.*	*Seconds.*	*Seconds.*	*Seconds.*	*Seconds.*	*Seconds.*	*Seconds.*
1	0·442	1·873	17·641	176·29	1762·9	17629	176295	1762947	17629473
10	0·442	1·398	5·922	55·789	557·51	5575·1	55751	557508	5575085
100	0·442	1·398	4·419	18·726	176·41	1762·9	17629	176295	1762947
1 000	0·442	1·398	4·419	13·975	59·218	557·89	5575·1	55751	557508
10 000	0·442	1·398	4·419	13·975	44·192	187·26	1764·1	17629	176295
100 000	0·442	1·398	4·419	13·975	44·192	139·75	592·18	5579	55751

The period (τ) of a wave is determined by the equation

$$\tau^2 = \frac{2\pi\lambda}{g} \Big/ \tanh \frac{2\pi h}{\lambda}, = \frac{0{\cdot}1953\,\lambda}{\tanh 6{\cdot}283185\,\frac{h}{\lambda}}$$

where g is taken equal to 32·1722 feet per second, as in this table; or

$$\tau^2 = \frac{0{\cdot}195373\,\lambda}{\tanh 6{\cdot}283185\,\frac{h}{\lambda}}$$

if g is taken equal to 32·16.

TABLE 48.—*Wave velocity.*

Depth of water (h).	Length of wave in feet (λ).									
	1	10	100	1 000	10 000	100 000	1 000 000	10 000 000	100 000 000	Infinite.
Feet.	*Ft./sec.*	*Ft./sec.*	*Ft./sec.*	*Ft./sec.*	*Ft./sec.*	*Ft./sec.*	*Ft./sec.*	*Ft./sec.*	*Ft./sec.*	*Ft./sec.*
1	2·262	5·340	5·668	5·672	5·672	5·672	5·672	5·672	5·672	5·672
10	2·262	7·156	16·89	17·92	17·94	17·94	17·94	17·94	17·94	17·94
100	2·262	7·156	22·63	53·40	56·68	56·72	56·72	56·72	56·72	56·72
1 000	2·262	7·156	22·63	71·56	168·9	179·2	179·4	179·4	179·4	179·4
10 000	2·262	7·156	22·63	71·56	226·3	534·0	566·8	567·2	567·2	567·2
100 000	2·262	7·156	22·63	71·56	226·3	715·6	1689	1793	1794	1794

The wave velocity, i. e., velocity of propagation, is

$$\lambda/\tau.$$

Tables 47 and 48 are adapted from Airy's Tides and Waves.

TABLE 49.—*Ratio of vertical to horizontal axes of elliptic orbits of water particles.*

$\frac{y}{\lambda}$	$2\pi\frac{y}{\lambda}$	Ratio of axes.	$\frac{y}{\lambda}$	$2\pi\frac{y}{\lambda}$	Ratio of axes.	$\frac{y}{\lambda}$	$2\pi\frac{y}{\lambda}$	Ratio of axes.
0·00	0·0000	0·0000	0·10	0·6283	0·5568	0·40	2·5133	0·9869
0·01	0·0628	0·0627	0·12	0·7540	0·6375	0·50	3·1416	0·9962
0·02	0·1257	0·1250	0·14	0·8796	0·7062	0·60	3·7699	0·9989
0·03	0·1885	0·1863	0·16	1·0053	0·7638	0·70	4·3982	0·9995
0·04	0·2513	0·2461	0·18	1·1310	0·8113	0 80	5·0265	0·9999
0·05	0·3142	0·3042	0·20	1·2566	0·8501	0 90	5·6549	0·9999
0·06	0·3770	0·3601				1·00	6·2832	0·9999
0·07	0·4398	0·4134	0·25	1·5708	0·9171			
0·08	0·5027	0·4642	0·30	1·8850	0·9549	10·00	62·8319	1·0000
0·09	0·5655	0·5120	0·35	2·1991	0·9757	∞	∞	1·0000

The maximum horizontal displacement at the bottom (where $y=0$) being A, and $2A$, the distance between the foci of the elliptic orbits, the maximum displacements for other depths are:

$$\mathbf{x} = A\cosh ly = A\cosh 2\pi\frac{y}{\lambda},$$

$$\mathbf{y} = A\sinh ly = A\sinh 2\pi\frac{y}{\lambda};$$

$$\therefore \frac{\mathbf{y}}{\mathbf{x}} = \tanh 2\pi\frac{y}{\lambda},$$

which is the ratio tabulated above.

TABLE 50.—*Propagation of a free tide wave along a uniform channel.*

Depths.		Velocity of propagation.			Wave length, statute miles.	Time required to travel			Difference in phase of tide wave		
Fathoms.	Feet.	Feet per second.	Knots, or nautical miles, per hour.	Statute miles per hour.		1 foot.	1 naut. mile.	1 stat. mile.	per statute mile.	per foot.	
						s.	*h.*	*h.*	°	°	*Radians.*
0	0	0·000	0·000	0·000	0·00					[0·00	[0·0000
	1	5·672	3·358	3·867	48·03	0·1763	0·2978	0·2586	7·4953	14196	2478
	2	8·022	4·750	5·469	67·93	0·1247	0·2105	0·1828	5·2996	10037	1752
	3	9·824	5·817	6·698	83·20	0·1018	0·1719	0·1493	4·3269	08195	1430
	4	11·344	6·717	7·735	96·07	0·08818	0·1489	0·1293	3·7472	07097	1239
	5	12·683	7·510	8·648	107·41	0·07886	0·1332	0·1156	3·3517	06348	1108
1	6	13·894	8·226	9·473	117·66	0·07199	0·1216	0·1056	3·0597	05795	1011
	7	15·007	8·886	10·232	127·09	0·06662	0·1125	0·09775	2·8327	05365	0936
	8	16·043	9·499	10·938	135·86	0·06234	0·1053	0·09141	2·6498	05019	0876
	9	17·016	10·075	11·602	144·10	0·05877	0·09921	0·08621	2·4983	04732	0826
	10	17·937	10·620	12·230	151·90	0·05574	0·09416	0·08177	2·3700	04489	0783
	11	18·812	11·139	12·826	159·31	0·05316	0·08985	0·07794	2·2597	04280	0747
2	12	19·649	11·634	13·397	166·40	0·05089	0·08598	0·07463	2·1635	04098	0715
	13	20·451	12·109	13·944	173·19	0·04890	0·08258	0·07174	2·0785	03937	0687
	14	21·223	12·566	14·470	179·73	0·04713	0·07955	0·06911	2·0030	03794	0662
	15	21·968	13·007	14·978	186·04	0·04552	0·07686	0·06676	1·9351	03665	0640
	16	22·688	13·434	15·469	192·14	0·04407	0·07446	0·06464	1·8737	03549	0619
	17	23·387	13·847	15·945	198·05	0·04275	0·07220	0·06270	1·8177	03443	0601
3	18	24·065	14·249	16·408	203·79	0·04156	0·07018	0·06094	1·7664	03345	0584
4	24	27·787	16·453	18·946	235·32	0·03598	0·06079	0·05277	1·5298	02897	0506
5	30	31·067	18·395	21·182	263·09	0·03219	0·05435	0·04721	1·3683	02591	0452
6	36	34·032	20·151	23·204	288·21	0·02939	0·04963	0·04310	1·2491	02366	0413
7	42	36·759	21·765	25·063	311·30	0·02720	0·04593	0·03990	1·1564	02190	0382
8	48	39·297	23·268	26·794	332·79	0·02545	0·04297	0·03733	1·0818	02049	0358
9	54	41·681	24·680	28·419	352·98	0·02399	0·04052	0·03519	1·0199	01932	0337
10	60	43·936	26·014	29·956	372·07	0·02276	0·03845	0·03338	0·9675	01832	0320
15	90	53·810	31·861	36·688	455·69	0·01858	0·03139	0·02726	0·7900	01496	0261
20	120	62·134	36·790	42·364	526·19	0·01610	0·02718	0·02361	0·6842	01296	0226
30	180	76·099	45·058	51·885	644·45	0·01314	0·02219	0·01927	0·5586	01058	0185
40	240	87·871	52·029	59·912	744·14	0·01138	0·01922	0·01669	0·4838	00916	0160
50	300	98·243	58·170	66·984	831·98	0·01018	0·01719	0·01493	0·4327	00820	0143
60	360	107·620	63·722	73·377	911·39	0·009294	0·01569	0·01363	0·3950	00748	0131
70	420	116·243	68·828	79·256	984·41	0·008606	0·01453	0·01262	0·3657	00693	0121
80	480	124·268	73·580	84·728	1052·38	0·008045	0·01359	0·01180	0·3421	00648	0113
90	540	131·807	78·043	89·868	1116·22	0·007587	0·01281	0·01113	0·3225	00611	0107
100	600	138·936	82·265	94·729	1176·60	0·007199	0·01216	0·01056	0·3060	00579	0101
150	900	170·162	100·754	116·019	1441·03	0·005877	0·00992	0·00862	0·2498	00473	0083
200	1200	196·486	116·340	133·968	1663·96	0·005089	0·008598	0·007463	0·2163	00410	0072
300	1800	240·645	142·487	164·076	2037·92	0·004156	0·007018	0·006094	0·1766	00334	0058
400	2400	277·873	164·530	189·459	2353·19	0·003598	0·006079	0·005277	0·1530	00290	0051
500	3000	310·671	183·950	211·821	2630·95	0·003219	0·005435	0·004721	0·1368	00259	0045
600	3600	340·323	201·507	232·039	2882·06	0.002939	0·004963	0·004310	0·1249	00237	0041
700	4200	367·591	217·653	250·630	3112·98	0·002720	0·004593	0·003990	0·1156	00219	0038
800	4800	392·971	232·680	267·935	3327·91	0·002545	0·004297	0·003733	0·1082	00205	0036
900	5400	416·809	246·795	284·188	3529·79	0·002399	0·004052	0·003519	0·1020	00193	0034
1000	6000	439·356	260·145	299·561	3720·72	0·002276	0·003845	0.003338	0·0967	00183	0032
1500	9000	538·098	318·611	366·885	4556·94	0·001858	0·003139	0·002726	0·0790	00150	0026
2000	12000	621·342	367·900	423·643	5261·90	0·001610	0·002718	0·002361	0·0684	00130	0023
3000	18000	760·986	450·584	518·854	6444·48	0·001314	0·002219	0·001927	0·0559	00106	0019
4000	24000	878·711	520·289	599·121	7441·44	0·001138	0·001922	0·001669	0·0484	00092	0016
5000	30000	982·428	581·701	669·838	8319·78	0·001018	0·001719	0·001493	0·0433	00082	0014
6000	36000	1076·20	637·222	733·770	9113·87	0·000929	0·001569	0·001363	0·0395	00075	0013
7000	42000	1162·43	688·278	792·563	9844·10	0·000861	0·001453	0·001262	0·0366	00069	0012
8000	48000	1242·68	735·800	847·283	10523·79	0·000804	0·001359	0·001180	0·0342	00065	0011
9000	54000	1318·07	780·434	898·682	11162·17	0·000759	0·001281	0·001113	0·0323	00061	0011
10000	60000	1389·36	822·650	947·294	11765·96	0·000720	0·001216	0·001056	0·0306	00058	0010

Velocity $= \sqrt{gh}$

where h = the undisturbed depth in feet and g = the acceleration of gravity, assumed to be 32·1722 feet per second in this computation.

If

τ = the periodic time (= 12·4206012 solar hours or = ½ lunar day for the tide wave), then

λ, or wave-length, $= \tau \sqrt{gh}$ feet $= \frac{\tau}{5280} \sqrt{gh}$ miles.

Difference in phase $= \frac{360°}{\lambda}$.

The nautical mile is taken as 6080 feet.

APPENDIX NO. 10—1897.

PHOTOTOPOGRAPHIC METHODS AND INSTRUMENTS.

By J. A. FLEMER, Assistant.

Blank page retained for pagination

CONTENTS.

	Page.
PREFACE	625
INTRODUCTION	627

CHAPTER I.

FUNDAMENTAL PRINCIPLES OF ICONOMETRY.

I. Orienting the picture traces on the working sheet	631
1. Using a surveying camera	631
2. Using a camera or phototheodolite	632
II. Arithmetical determination of the principal and horizon lines	633
1. Determination of the principal point and of the distance line of the perspective	633
2. Determination of the position of the horizon line on the perspective	634
III. Graphic method for determining the positions of the principal and horizon lines on the perspective	635
IV. The five-point problem (by Prof. F. Steiner). Locating the position of the camera station by means of the perspective when five triangulation points are pictured on one photograph	636
1. Determination of the principal point and of the distance line	637
2. Simplified construction for locating the camera station by means of the five-point problem	637
3. Application of the five-point problem for the special case when the five points are ranged into a triangle	638
4. To find the elevation of a camera station that had been located by means of the five-point problem.	638
V. The three-point problem	639
1. Using the three-arm protractor; mechanical solution of the three-point problem	640
2. Graphic solution of the three-point problem	640
(*a*) Using the so-called two-circle method	640
(*b*) Using the method of Bohnenberger and Bessel	640
VI. Orientation of the picture traces, based upon instrumental measurements made in the field	641
VII. Relations between two perspectives of the same object viewed from different stations; Prof. G. Hauck's method	641
1. "Kernelpoints" and "kernelplanes"	641
2. Use of the line of intersection of two picture planes showing identical objects viewed from two different stations	643
VIII. To plat a figure, situated in a horizontal plane, on the ground plan by means of its perspective	645
IX. To draw a plane figure on the ground plan by means of the "method of squares" if its perspective and the elements of the vertical picture plane are given	649
X. The use of the "vanishing scale"	651

CHAPTER II.

PHOTOGRAPHS ON INCLINED PLANES.

I. To plat the picture trace of an inclined plate	654
II. To plat the lines of direction to points pictured on an inclined photographic plate	656
III. Determination of the altitudes of points pictured on inclined photographic plates	656
IV. Application of Professor Hauck's method	657

CHAPTER III.

PHOTOTOPOGRAPHIC METHODS.

I. Analytical or arithmetical iconometric methods	659
1. Method of Prof. W. Jordan	659
2. Method of Dr. G. Le Bon	660

CHAPTER III—Continued.

PHOTOTOPOGRAHIC METHODS—continued.

	Page.
I. Analytical or arithmetical iconometric methods—Continued.	
3. Method of L. P. Paganini (Italian method)	661
General determination of the elements of the Italian photographic perspectives	662
(*a*) Orientation of the picture trace	662
(*b*) Platting of the lines of direction to pictured points of the terrene	662
(*c*) Determination of the elevations of pictured points	663
(*d*) Checking the position of the horizon line on a photograph	664
(*e*) Determination of the focal length	665
(*f*) Determination of the principal point of the perspective	665
(*g*) Application of Franz Hafferl's method for finding the focal length of a photographic perspective from the abscissæ of two pictured known points	668
4. General arithmetical method for finding the platted positions of points pictured on vertically exposed photographic plates (negatives)	668
5. General arithmetical method for finding the platted positions of points pictured on inclined photographic plates	671
6. General arithmetical determination of the elements of photographic perspectives	672
II. Graphical iconometric methods	674
1. Method of Col. A. Laussedat	674
(*a*) Locating points, identified on several photographs, on the platting sheet	676
(*b*) Determination of the elevations of pictured points	676
(*c*) Drawing the plan, including horizontal contours	677
2. Method of Dr. A. Meydenbaur	677
(*a*) Determination of the focal length for the panorama views	678
(*b*) General method of iconometric platting	678
(*c*) Determination of the elevations of pictured points of the terrene	681
3. Method of Capt. E. Deville (Canadian method)	681
(*a*) General remarks on the field work	681
(*b*) General remarks on the iconometric platting of the survey	683
(*c*) Platting the picture traces	684
(*d*) The identification of points, pictured on several photographs, representing the same points of the terrene	685
(*e*) Application of Professor Hauck's method for the identification of points on two photographs	685
(*f*) Platting the intersections of horizontal directions to pictured points	686
(*g*) Platting pictured points iconometrically by "vertical intersections"	687
(*h*) Iconometric determination of elevations	689
(*i*) Iconometric determination of elevations by means of the "scale of heights"	690
(*j*) The use of the so-called "photograph board"	691
(*k*) Constructing the traces of a figure's plane	692
(*l*) Contouring	694
(*m*) The photograph protractor	696
4. Method of V. Legros for determining the position of the horizon line	697
5. Method of Prof. S. Finsterwalder for the iconometric location of horizontal contours	697

CHAPTER IV.

PHOTOGRAMMETERS.

I. Requirements to be fulfilled by a topographic surveying camera	699
II. Ordinary cameras (with bellows) made adapted for surveying	699
III. Special surveying cameras with constant focal lengths	701
1. Dr. A. Meydenbaur's surveying camera	701
2. E. Deville's new surveying camera	701
3. Use of the instruments comprised in the Canadian phototopographic outfit	705
4. United States Coast and Geodetic Survey camera	706
IV. Surveying cameras combined with geodetic instruments (phototheodolites, photographic plane tables, etc.)	706
1. The new Italian phototheodolite, devised by L. P. Paganini	708
2. The photogrammetric theodolite of Prof. S. Finsterwalder	711
3. Phototheodolite for precise work, by O. Ney	712
4. The phototheodolite of Dr. C. Koppe	715
5. Phototheodolite devised by V. Pollack	716
6. Col. A. Laussedat's new phototheodolite	717
7. The phototheodolite of Starke and Kammerer	717
8. Captain Hübl's plane table photogrammeter	721
V. Panoramic cameras	722
The topographic cylindrograph of R. Moessard	722

CHAPTER V.

ICONOMETERS AND PERSPECTOGRAPHS.

	Page.
I. The graphic protractor	725
II. The graphic sector ("settore grafico")	725
III. The graphic hypsometer	725
IV. The centrolinead	725
1. To set the arms of the centrolinead, if the direction to the vanishing point is given, by a line in the ground plan	727
2. To set the arms of the centrolinead if the given line belongs to the perspective	727
V. The perspectometer	728
The use of the perspectometer	728
VI. The perspectograph (H. Ritter's instrument)	729
The use of the perspectograph	731
VII. Professor Hauck's trikolograph	732

Blank page retained for pagination

PREFACE.

In the annual report of the Superintendent of the United States Coast and Geodetic Survey for 1893, Appendix No. 3, a description is given of phototopography as practiced in Italy and in the Dominion of Canada.

The Canadian surveying camera and the Italian phototheodolite, which have been described in said appendix (No. 3, 1893), have both been replaced by improved and more effective instruments, which will be described in the paper herewith presented, together with other photographic surveying instruments that may be regarded as typical representations of the different forms now in use.

Notwithstanding the rapid rise in the popularity of photographic surveying in general, we still meet with many who express doubt as to the practical value and accuracy of photographic surveying methods, either from ignorance of those methods, from defective results obtained from the application of photography to the survey of areas not adapted for a phototopographic development, or, more frequently, from that extreme conservatism which meets all innovations with more or less doubt and distrust. Others, again, may have failed to take kindly to photographic surveying, supposing a thorough familiarity with the theories and laws of optics, descriptive geometry, perspective drawing, and general cartography to be essentials, without which no practical knowledge and understanding of photogrammetry may be obtained.

Although it should be admitted that such knowledge will enable the student to master phototopography in a rapid and easy manner, giving him a great advantage in and an enlarged field for the practical application of the same, or in teaching its methods to others, yet the fundamental principles underlying this art are so simple that it is believed any topographer or land surveyor, with the knowledge that he should possess as such, can readily acquire enough of the theoretical fundamental principles to become fully able to apply photography successfully to practical surveys.

Although it will not fall within the scope of this paper to enter into the study of either optics, descriptive geometry, perspective, photo-chemical analysis, or cartography, it will show in a general manner how photography has been applied to topographic surveys by describing the simple processes and methods that will suffice to direct beginners in their practical applications, leaving it to experience and subsequent special study to determine the measure of success, the more so as several excellent works and text-books on photographic surveying have recently been published in the English, French, Italian, and German languages.

The compiler of this paper having consulted all available publications describing phototopographic methods, both foreign and domestic, gladly expresses his indebtedness for information on this subject to Capt. E. Deville, surveyor-general of Dominion lands; to Mr. W. F. King, Alaskan boundary commissioner to Her Majesty, Ottawa, Canada; to Col. A. Laussedat, director of the Conservatoire des Arts et Métiers, Paris; and particularly to the following publications:

La Fototopografia in Italia, Rivista Marittima, L. P. Paganini, 1889, Fasc. VI and VII.

Nuovi Appunti di Fototopografia, Rivista Marittima, L. P. Paganini, 1894, E. C. Forzani.

Zeitschrift für Vermessungswesen.

Die photographische Messkunst, Prof. Franz Schiffner, Halle a. S., Wilhelm Knapp, 1892.

Photographic Surveying, E. Deville, Ottawa, 1895.

Zeitschrift für Instrumentenkunde.

Comptes Rendus de l'Académie des Sciences, Paris, Revue Scientifique, No. 26, I; No. 3, II; 1894.

Die photographische Messkunst, Franz Schiffner, Halle a. S., 1892.

Blank page retained for pagination

APPENDIX NO. 10—1897.

PHOTOTOPOGRAPHIC METHODS AND INSTRUMENTS.

By J. A. FLEMER.

INTRODUCTION.

Topography is that branch of surveying which pictures the shape of the outer visible surface of the earth, in reduced scale, as a horizontal projection, yet showing the relative positions of points of the terrene also in the vertical sense. It is, therefore, supplementary to geodesy in representing areas of the earth's surface, including all the necessary details and changes in the terrene, by means of instrumental measurements made in the field.

The work of filling in the details—topographic surveying in the closer sense—may be accomplished by various methods, differing in the matter of costs, time, and attainable accuracy; one may be advantageously employed for one class of work, while another may be preferable for another class or locality, under different conditions, and the method best adapted for any particular region should be employed to obtain the best results. Minute and detailed methods, with ensuing accurate results, should be applied to cities and all closely settled regions, to the coastal belts, larger river valleys and lakes, particularly when navigable, and this work should be platted on a large scale.

Arid, barren, and mountainous regions, as well as prairies and swamp lands, when sparsely settled, should be more generalized in their cartographic representation and platted on a small scale.

Topographic surveys may be accomplished in various ways, of which the following are the methods and instrumental outfits more frequently in use:

I. The direct platting to scale in the field of all features to be represented on the finished chart:

(*a*) With a plane-table and steel tape measure.

(*b*) With a plane-table and telemeter or stadia rods.

(*c*) With a tachygraphometer and telemeter or stadia rods.

(*d*) With either outfit mentioned under *a* and *b*, but with a leveling instrument in addition for a more precise location of the horizontal contours.

(*e*) Using a barometer instead of a level for less accurate work.

II. The compilation of all available data—cadastral surveys, public land and county surveys, railroad and canal surveys—giving principally the horizontal distances and making a supplementary survey to supply the missing data, which in this case are principally elevations that may be supplied by leveling profiles, by trigonometric leveling, by interpolation and sketching.

III. The records of the survey are in the shape of field notes and sketches (tachymetry), the map being produced by platting the recorded data in the office:

(*a*) With a surveyor's compass and steel tape, locating the relative positions of characteristic points in the horizontal sense, while their relative elevations are ascertained by means of a level and minor details are sketched.

(*b*) By means of a transit and steel tape points are determined both geographically and hypsometrically (using vertical angles), and minor details by sketching.

(*c*) By means of a transit and telemeter or stadia rods.

(*d*) By means of a tachymeter and stadia rods (elevations being obtained mechanically with the instrument).

(*e*) By means of a transit with steel tape or telemeters, combined with a leveling instrument (for locating horizontal contours).

(*f*) By using a specially constructed aneroid barometer (Goldschmidt's) in place of the level for locating and tracing the horizontal contours in the field.

IV. The field records for developing the terrene are represented by photographic negatives, taken under special conditions (for phototopographic purposes) from known stations:

(*a*) With a camera or phototheodolite, telemeters, or other distance measures (and often a barometer for obtaining elevations).

(*b*) With a surveying camera, a separate theodolite, telemeters and aneroid barometer.

(*c*) With a photographic plane table, a distance measure, and aneroid barometer.

(*d*) With a surveying camera, a separate plane table, and distance measure, frequently using an aneroid barometer for camera stations occupied without the plane table.

V. The topographic survey may be accomplished by means of a specially constructed surveying camera attached to a free or captive balloon.

After the area which is to be surveyed has been covered with a net of triangles and polygons it will have been provided with a framework of lines of known lengths and direction (triangulation), forming a skeleton survey of the country, and after the natural and artificial features have been filled in by one of the numerous topographic methods (just mentioned) with more or less detail and accuracy we will have a topographic survey of the area of more or less precision.

A good example of changing the method with the locality may be cited in the new survey of Italy, where Paganini's results fully proved the efficiency of phototopography for alpine work (platted on a scale of 1:25000 and 1:50000) and led to the adoption of the phototheodolite as an auxiliary instrument to the plane table, the latter being used for mapping the areas below 2,000 meters, while the phototheodolite was exclusively used for the delineation of the terrene situated above that altitude.

Photogrammetry proper (or *metrophotography*) should be applied to the art of taking perspective views of buildings with a photographic camera for the purpose of constructing therefrom their elevations and ground plans, and it is used principally for architectural, archæological, and engineering purposes.

The term *phototopography* (or *topophotography*) should be generally adopted for all topographic surveys based on perspective views of the terrene obtained by means of the camera.

Under *photographic survey* we could then class all surveys based on photographic data which do not include the orographic delineation of the terrene.

Iconometry means the measuring of dimensions of objects from their perspectives ("Bildmesskunst"), and this term could well be applied to those graphic constructions which serve to convert perspectives into horizontal projections; iconometry is the reverse of perspective drawing.

Photography has been very successfully employed for topographic surveys in Italy, Austria, and Canada, and for the production of the extensive topographic reconnaissance maps of southeastern Alaska.

Although this method, invented and elaborated by Colonel Laussedat, found its first application in France, still, both in France and in Germany, it was originally preempted by the military authorities, under whose auspices it was developed and chiefly used for so-called secret or military surveys; lately, however, photography has found a wider and more general application to surveying in those two countries, and we find this method now in use also in Greece, Spain, Portugal, Norway, Belgium, Mexico, Chile, Peru, Tonquin, Brazil, Argentine Republic, Switzerland, and England.

Although Lieut. Henry A. Reed has, for several years past, taught phototopography, theoretically and practically, at the United States Military Academy at West Point, there seems to be no record of any further work of this kind undertaken by others in the United States.

In the following paper we will treat principally of those photogrammetric methods which are

applicable to topographic surveys, although the same principles underlie also the methods in use when applying photography to—

Geological surveys.—For the study of changes in glaciers (glacial motion or variation) based upon the comparison of glacier maps, obtained at stated time intervals from identical and known camera stations; for volcanic eruptions and their effects; for the study of periodical changes in sand dunes due to recurrent winds blowing from one direction at regular intervals, etc.

Meteorologic observations.—For the study of the higher aerial currents and cloud altitudes, based upon iconometric cloud charts, obtained by simultaneous photographic records on plates exposed at different stations at stated time intervals; for the study of the paths of lightning, their lengths, etc.

Hydrographic surveys.—For the location of rocks, buoys, etc.; for the study of fluvial currents, riparian changes due to corrosion, erosion, etc.; for obtaining coast views from points marked on the sailing charts to facilitate the locating of the position of vessels when approaching land, etc.

Engineering.—To estimate the amount of work done at any date by means of photographic surveys that show the status of the work (excavations, fills, structural buildings, etc.) at stated time intervals, etc.

Architectural purposes.—For constructing the ground plans and elevations of old buildings from their perspective views (photographs), for purposes of remodeling, renovation, or preservation.

Military and secret surveys, and so on.

CHAPTER I.

FUNDAMENTAL PRINCIPLES OF ICONOMETRY.

If only one perspective of an object, including its distance line, the principal point, and the horizon line is given—in other words, if the point of view and the central projection upon a vertical plane of an object are given—the object itself can not yet be determined regarding its position and dimensions. In the same way the geographic position of a point can not be located

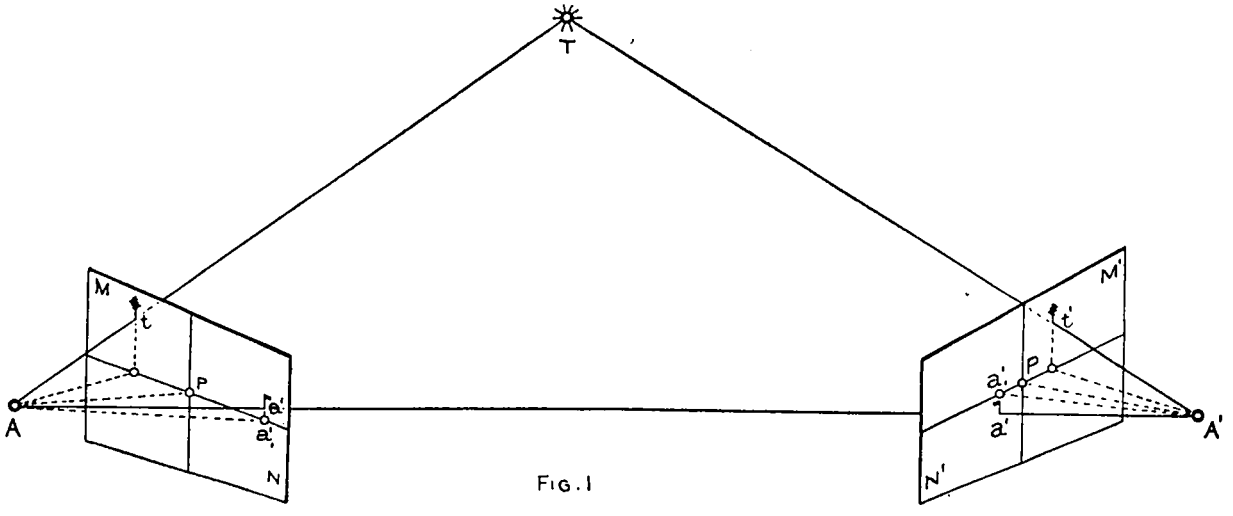

FIG. 1

by means of the plane table from a known station, unless direct measurements to ascertain the distance of such point from the station are resorted to.

If, however, two different perspectives (including their elements) of the same object, obtained from two different known stations, are given, the dimensions and the position of the object with reference to the two stations may be determined iconometrically in a manner analogous to that in

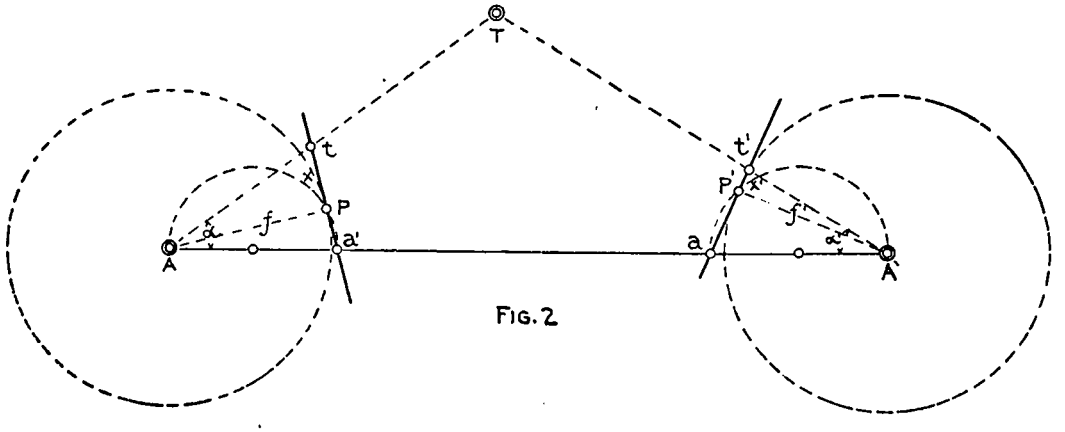

FIG. 2

which a point is located (by intersection) on the plane-table sheet by being observed upon from two different plane-table stations.

Referring to fig. 1, the positions of the camera stations A and A', also the distance $A\ A'$, may be given, and two photographs containing the image t of an object T, including the image a' of the other camera station, may have been obtained from the two stations.

If the base line $A\,A'$, fig. 2, be laid down on paper, in reduced scale, and if the pictures MN and $M'\,N'$, fig. 3, be brought into the same relative positions with reference to the platted line which they had at the time of their exposure in the field, the position T of the pictured point (with reference to the platted points A and A') may be located by drawing the rays $A\,t$ and $A'\,t'$ to their intersection. To locate the platted position of T the horizontal projections of the rays $A\,t$ and $A'\,t'$ are brought to their intersection on the platting sheet, fig. 4, which may be done by ascertaining

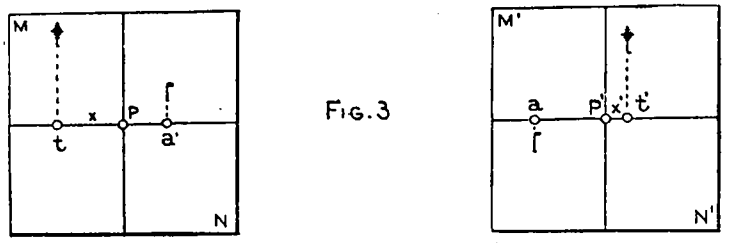

FIG. 3

the proper positions of the lines of intersection of the picture planes with the horizontal platting plane with reference to A and A' (by "orienting" the picture traces).

The map being the orthogonal projection of the terrene in horizontal plan, the horizontal projections of the perspectives (or picture planes exposed in the vertical plane) will appear as straight lines, termed "picture traces," fig. 4.

The correct orientation of the picture traces forms the most important part of iconometric

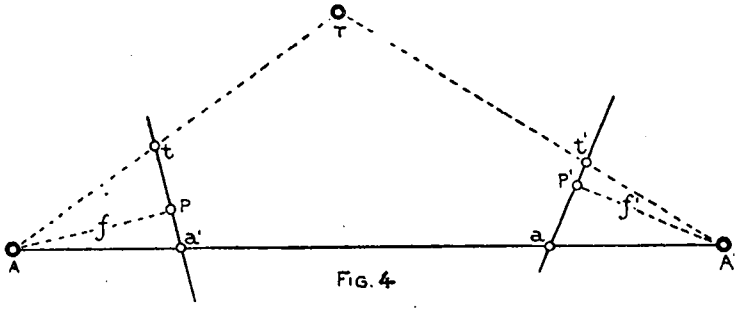

FIG. 4

platting, the subsequent location of picture points being accomplished by bringing the horizontal projections of the visual rays—lines of direction—drawn to identical points to their corresponding intersections.

I. ORIENTING THE PICTURE TRACES ON THE WORKING SHEET.

(1) A base line AA', measured in the field, has been platted to scale, fig. 2, and two pictures, MN and $M'N'$, fig. 3, had been obtained from the camera stations A and A^1 respectively by means of a surveying camera. The focal lengths of the pictures ($=f$ and f' respectively), the positions of the principal points (P and P'), and the horizon lines may also be given.

It is desired to locate T with reference to AA' upon the working sheet.

The distances: $AP=f$; $A'P'=f'$ (fig. 4); tP, $t'P'$, Pa' and $P'a$ (to be measured on the pictures MN and $M'N'$ respectively) and the line AA' are given.

The distances Aa' and $A'a$ may be found graphically (by constructing the right-angle triangles APa' and $A'P'a$), or they may be computed from the equations:

$$Aa' = \sqrt{(AP)^2 + (Pa')^2}$$

$$A'a = \sqrt{(A'P')^2 + (P'a)^2}$$

These distances are now laid off upon AA' from A and A' respectively, semicircles are described over Aa' and $A'a$, and two circles are drawn about A and A' with f and f' respectively, as radii.

The intersections P and P' of these two pairs of circles locate the horizontal projections of the principal points on the two picture-traces, the latter being represented by the tangents Pa' and $P'a$. The distances x $(= Pt)$ and x' $(= P't')$ are now measured on the pictures and laid off on the tangents as indicated in fig. 2, when the intersection of the lines drawn from A and A' through the points (just found) t and t' will locate the horizontal projection of T with reference to A and A'.

(2) The instrument used was a camera or phototheodolite:

In this case the angles α and α' (fig. 2) may be measured directly in the field.

We now plat the angles α and α' upon the base line AA' and make $AP = f$ and $A'P' = f'$.

The perpendiculars to AP and $A'P'$ in P and P', respectively, will represent the picture-traces (ta' and $t'a$) in correct orientation.

(3) When several pictured points (triangulation points) and the base line are given on the working sheet, the orientation of the picture-traces upon the map-projection may be accomplished as follows (fig. 5):

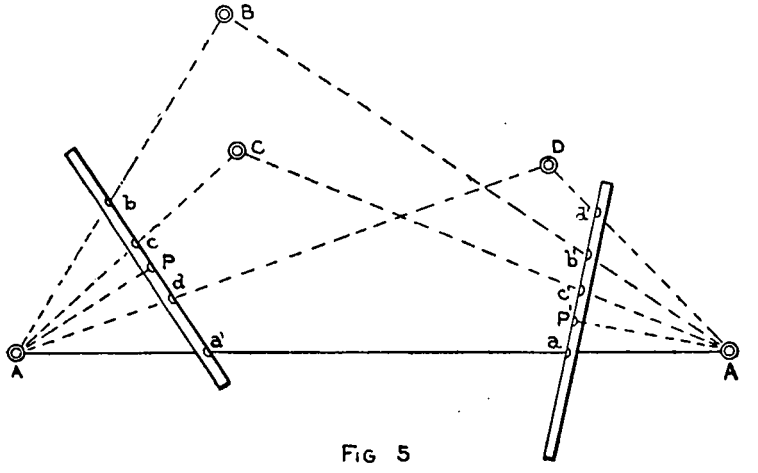

FIG 5

The rays AB, AC, AD, and $A'B$, $A'C$, $A'D$ are drawn upon the iconometric platting sheet, the points B, C, and D being already platted on the same.

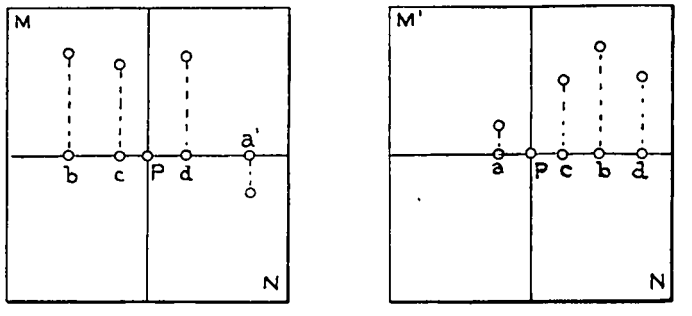

FIG 6

The points b, c, P, d, and a are transferred from the horizon line $00'$ of the negative MN (fig. 6) upon the perfectly straight edge of a strip of paper, which is placed upon the radials drawn from A (as center) to the points B, C, D. The strip is now moved about until

b falls upon the ray AB
c falls upon the ray AC
d falls upon the ray AD
a' falls upon the line AA'

The line AP should now be perpendicular to the straight edge of the paper strip, and the line $bcda'$ drawn upon the working sheet (along the straight edge of the paper strip) will represent the oriented picture-trace of MN—

AP will be the distance line, and

P will be the horizontal projection of the principal point.

The same having been done regarding the point A' and its picture $M'N'$, both picture-traces will be oriented and the positions of any additional points, that may be identified on both pictures, may be located by platting their abscissæ (measured on the horizon lines of the pictures, regarding P as the origin of the coordinates) upon the picture-traces on the proper sides of the principal points. Lines drawn from the station points, A and A', through such corresponding points on the picture-traces will locate the relative positions of such points on the platting sheet by their points of intersection.

II. ARITHMETICAL DETERMINATION OF THE PRINCIPAL AND HORIZON LINES ON THE PICTURES.

In the preceding it had been assumed that each perspective was provided with the principal and horizon lines, which would be the case when an *adjusted* surveying camera or phototheodolite

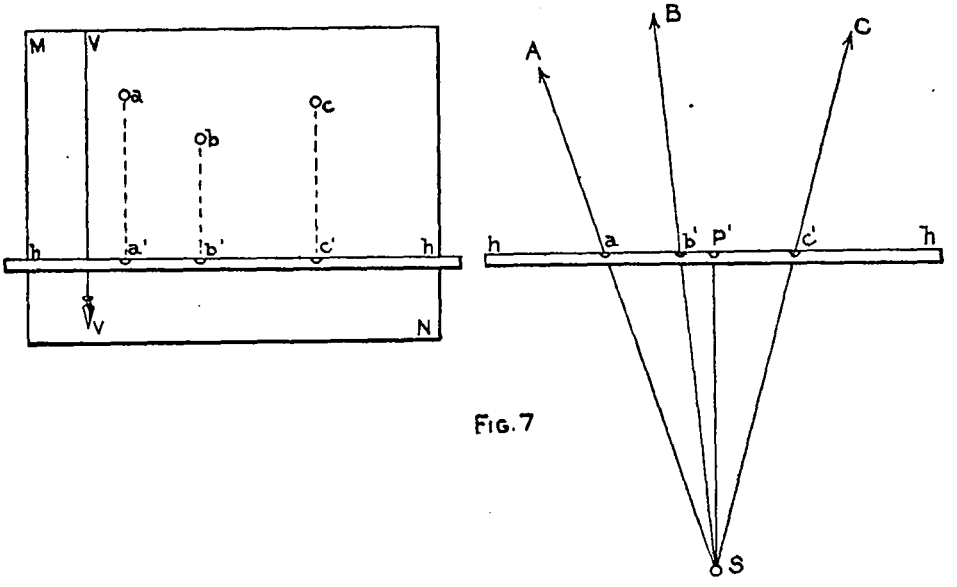

FIG. 7

had been used for obtaining the pictures. When an ordinary camera (with provisions to maintain the picture plane in a vertical position) or an unadjusted surveying camera is used, the correct position of the principal and horizon lines as well as the length of the distance line (focal length) must be ascertained, which may be accomplished in various ways:

(1) *Determination of the principal point and distance line of the perspective.*—A plumb-bob, suspended in such a way that the plumbline will be photographed upon the negative, may serve to establish the direction of the principal line VV (fig. 7) upon the trial plate.

The negative may also contain the images $a, b, c, \ldots$ of three or more points $A, B, C, \ldots$ of known positions. A line hh is drawn upon the negative perpendicular to VV, and the straight edge of a paper strip is placed upon this line. The pictured points $a, b, c, \ldots$ are now projected upon the straight edge of the paper by drawing parallels to VV through the points $a, b, c, \ldots$ (fig. 7).

After having drawn radials from the platted station S to the points $A', B', C', \ldots$ the paper strip is adjusted over the former in such a way that the image projections a', b', c' will fall upon their corresponding radials, when the position (as indicated by the line hh) of the paper strip's edge will be the oriented picture trace. If we now draw a line (SP') from the platted station S perpendicular to hh, the point P' will be the horizontal projection of the principal point P, and SP' will be the distance line ($=f$) for the picture MN.

Whenever the positions of the points A, B, C, ... with reference to the station S are not known, it will become necessary to observe the horizontal angles ASB, BSC, CSD, ... instrumentally from the station S, and plat the same upon a sheet of paper in order to adjust the paper strip upon the radials, in the manner just described, to find the principal point and distance line (focal length).

(2) *Determination of the position of the horizon line on the perspective.*—When the elevations AA', BB', CC', ... of the points A, B, C, ... above the horizon of the station (S) are known, the position of the horizon line (oo') (fig. 8) may be found by constructing or by computing the lengths of the ordinates aa', bb', cc', ... from the relations:

$$aa' : AA' = Sa' : SA'$$
$$bb' : BB' = Sb' : SB'$$
$$cc' : CC' = Sc' : SC'.$$
. . . .
. . . .
. . . .

whence

$$aa' = \frac{Sa' . AA'}{SA'} = y'$$
$$bb' = \frac{Sb' . BB'}{SB'} = y', \text{ etc.}$$

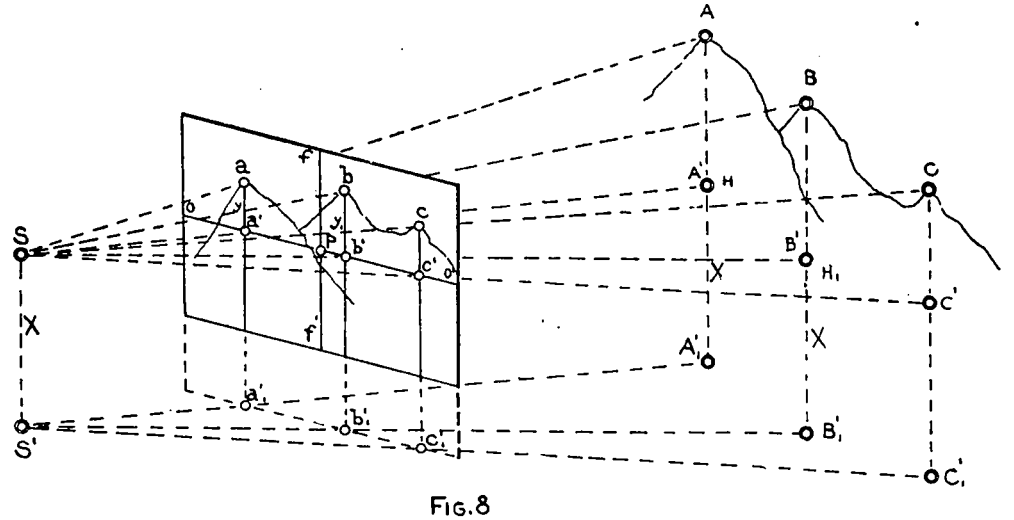

FIG. 8

The distances Sa', Sb', Sc', . . . are taken from the platting sheet (fig. 8) and the distances SA', SB', SC', ... as well as the differences in elevation AA', BB', CC', ... are known (if the points A, B, C, . . . had been located in the horizontal and vertical sense with reference to the station S).

For example:

Difference in elevation between A and $A' = 100^{m}$.
Distance of A' from the station $S = 1000^{m}$.
Distance Sa', measured on the platting sheet, $= 0{\cdot}5^{m}$.

The ordinate $aa' = \frac{0{\cdot}5 \times 100}{1000} = 0{\cdot}05^{m}$.

The horizon line (oo') on the negative will be 50 mm. vertically below (parallel with VV) the pictured point a.

The direction of VV (the principal line) being parallel to the pictured plumb line, this distance aa' is laid off in the same direction below a, and a line oo', drawn at right angles to VV through a', will locate the horizon line. The ordinates bb', cc', ... of the other pictured points may

well serve to check this position of oo'. The horizon line will be the tangent to the arcs described with aa', bb', cc', ... about a, b, c, ... respectively, as centers.

The principal point P, may now be transferred to the negative by using the paper strip, and the line drawn through P perpendicular to oo' will be the principal line for the picture MN.

III. GRAPHIC METHOD FOR DETERMINING THE POSITIONS OF THE PRINCIPAL AND HORIZON LINES ON THE PERSPECTIVES.

The following graphic method for orienting the picture trace and locating the principal and the horizon lines was published by Prof. F. Schiffner in 1887; it is also mentioned by Prof. F. Steiner.

Three points, A, B, and C (fig. 9), may be given with reference to the station S upon the platting sheet.

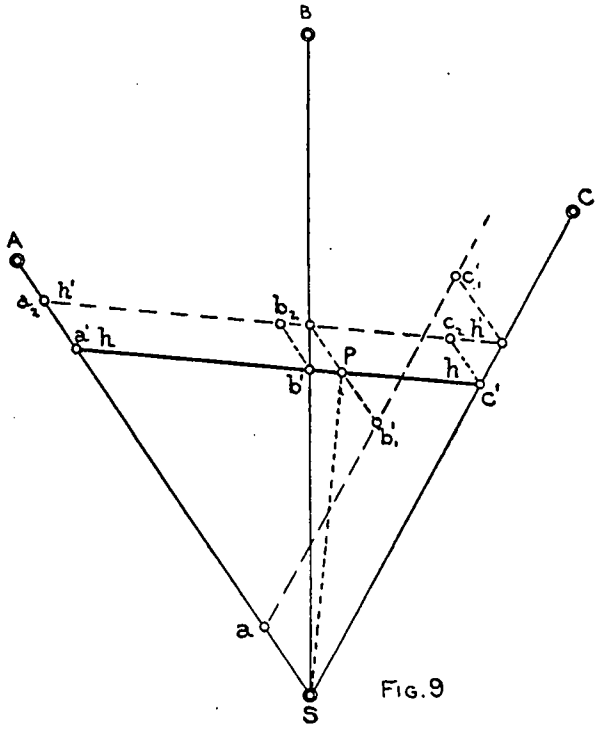

FIG. 9

From S radials are drawn through A, B, and C. Through a point a on the ray SA a parallel to SC is drawn, and the distance $a'b'$ (taken from the negative MN) is laid off from a ($= ab'_1$) upon this parallel, while the distance $b'c'$ is laid off upon the same line from b'_1 ($= b'_1c'_1$). Parallels to the radial SA are now drawn through the points b'_1 and c'_1 and prolonged to intersect the radials SB and SC. The line ($h'h'$) connecting these two points of intersection will be parallel with the direction of the picture trace.

The same distances $a'b'$ and $b'c'$ (taken from the negative) are laid off upon this line $h'h'$ from a_2 ($= a_2b_2$) and from b_2 ($=b_2c_2$). The lines drawn through these points b_2 and c_2, and parallel with the radial SA, are brought to intersections with the radials SB and SC, when the line (hh) passing through these intersections will represent the picture trace correctly placed (oriented) with reference to S, A, B, and C.

The distance SP of S from hh represents the distance line (focal length) of the picture MN, while the point P' will be the horizontal projection of the principal point P.

After having transferred P' (with reference to a', b', and c'), by means of a paper strip, to the negative MN, a parallel to VV, drawn through the transferred point P, will locate the principal line upon the negative.

The horizon line may now be located in the same manner as shown under II, 2, adopting the graphic solution.

IV. THE FIVE-POINT PROBLEM (BY PROFESSOR STEINER).

In the methods just described it had been assumed that the position of the camera station was known with reference to the surrounding points A, B, C. . . . .

In case the panorama pictures were taken from a camera station of unknown position and a series of known points are pictured upon the panorama views, the position of the camera station may be found (with reference to the surrounding points of known positions), and the orientation of the picture trace may be accomplished by means of Prof. F. Steiner's so-called "five-point problem" (fig. 10), if one of the views contains the pictures of *five* or more points of known positions.

The panorama view MN may contain the images a, b, c, d, and e of the points A, B, C, D, and E (already plotted upon the working sheet), and also the picture of a suspended plumb line or other vertical (or horizontal) line.

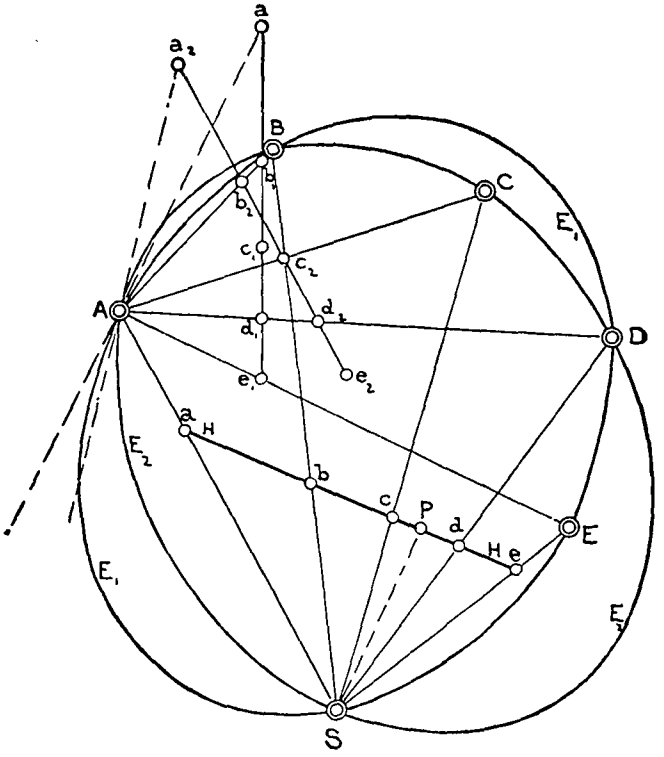

FIG. 10

The points a, b, c, d, and e of the negative are again projected upon the straight edge of a paper strip $= a'$, b', c', d', and e'.

Radials are now drawn from one (A) of the five plotted points, as a center, to the other four, B, C, D, and E. The marked paper strip is then placed over the radials in such a way that

b' falls upon AB, d' falls upon AD, e' falls upon AE,

when the strip will have the position a_1, b_1, c_1, d_1, e_1. The line drawn through A and a_1 (the latter transferred by means of the strip) will be the tangent in A to the ellipse E_1 (passing through A, B, D, E and through the station point S).

The paper strip is now placed over the radials AB, AC, and AD, so that

b' falls upon AB, c' falls upon AC, d' falls upon AD,

when the strip will have the position a_2 b_2 c_2 d_2 e_2, and the line Aa_2 will be the tangent in A to the ellipse E_2 (passing through the points A, B, C, D and the station point S).

The position of the station point S on the working sheet (with reference to the five points A, B, C, D, and E) will be identical with the point of intersection of the two ellipses E_1 and E_2.

(1) *Determination of the principal point and distance line in the perspective.*—The distance line and the principal point are now found by drawing the radials SA, SB, SC, SD, and SE, and placing the paper strip over these in such a way that

a' falls upon SA, b' falls upon SB, c' falls upon SC, d' falls upon SD, e' falls upon SE,

which position is indicated by the line HH. The perpendicular upon HH passing through S ($= SP$) is the distance line and P is the principal point projected into horizontal plan, which

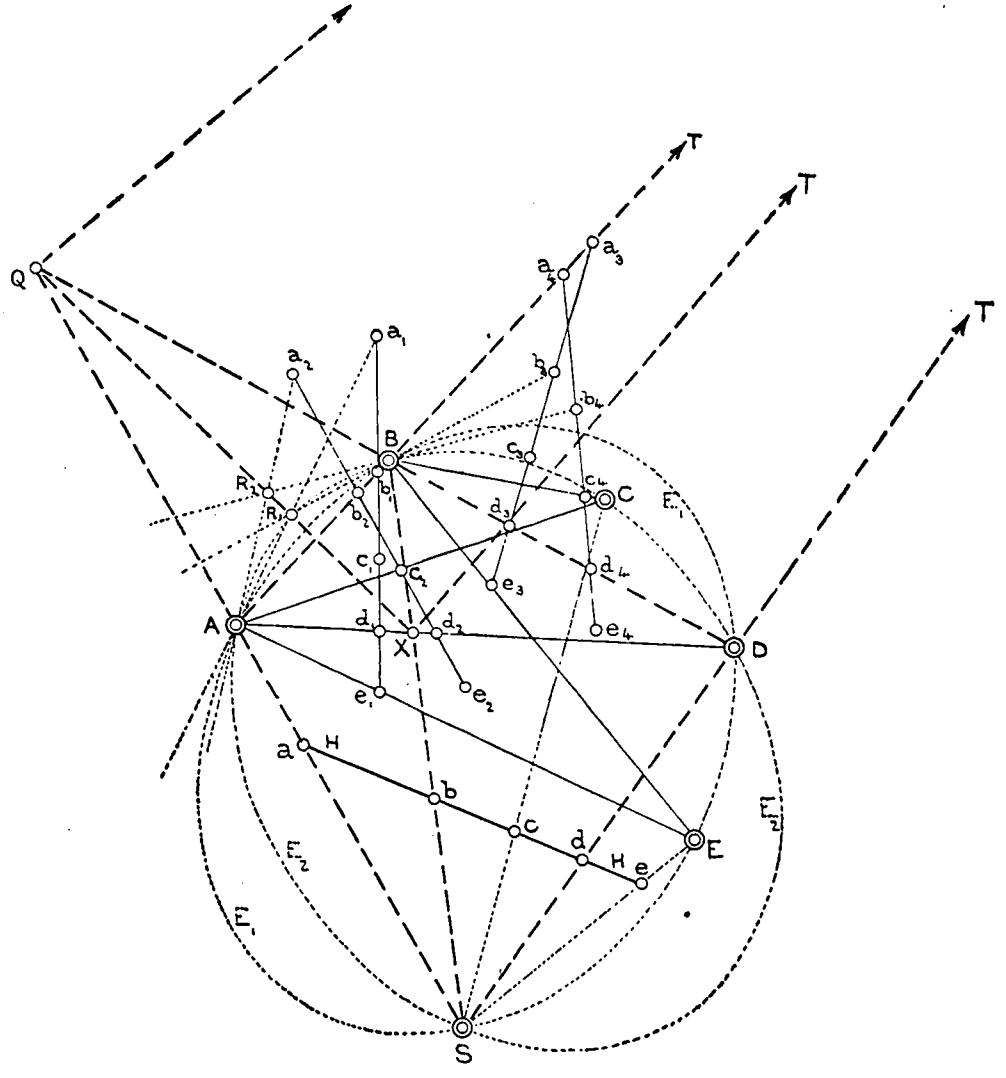

FIG. 11

may now be transferred to the picture by means of the paper strip in order to locate the principal line in a similar manner to that mentioned in the preceding pages.

(2) *Simplified construction for locating the camera station by means of the five-point problem.*—The preceding method is rather complicated, but Professor Schiffner devised the following construction (fig. 11), in which the drawing of the ellipses E_1 and E_2 is avoided:

The same five points, A, B, C, D, and E, with their images a, b, c, d, and e, on one plate MN, may be given.

The two lines, $b_3 B$ and $b_4 B$, tangent in B to the two ellipses E_1 and E_2, respectively, are located precisely in the same manner as the two tangents $a_1 A$ and $a_2 A$ were found for the point A.

The intersections R_1 and R_2 of the tangent pairs $a_1 A$, $b_3 B$ and $a_2 A$, $b_4 B$ (belonging to the ellipses E_1 and E_2, respectively) are situated upon a line Qx, forming one side of the polar triangle QxT, common to both ellipses. This line Qx intersects the diagonal AD in x and the quadrilateral side BD in Q, and the lines drawn through Q from A and through x from B will intersect each other in the fourth point of intersection (S) of the two ellipses.

The quadrilateral $ABDS$, obtained by connecting the four points of intersection of the two ellipses, has the point x as the intersection of its diagonals. By prolonging the sides BD and AS to their point of intersection Q and the sides AB and SD to their point of intersection T, the three diagonal points QxT will form the polar triangle common to the two ellipses.

Also this method remains complicated and requires many lines to be drawn before the picture trace and the camera station (S) may be plotted.

(3) *Special application of the five-point problem for the case when the five points range themselves into a triangle.*—The application of the "five-point problem" becomes very much simplified, however, for the special case when the five points range themselves into a triangle, of which two sides (AC and CE) contain three points each (fig. 12).

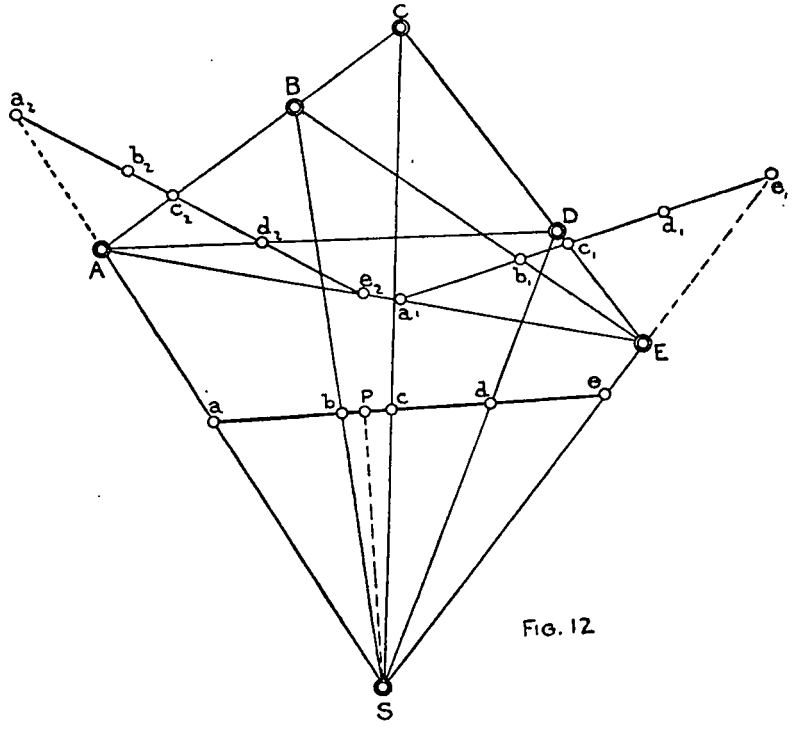

FIG. 12.

If we now place the strip of paper upon the radials drawn from A, so that

e' falls upon AE, d' falls upon AD, c' falls upon AC,

it will have the position $a_2\ b_2\ c_2\ d_2\ e_2$, and the first ellipse (E_1) will resolve itself into the lines CE and Aa_2.

If we now place the paper strip $a'\ b'\ c'\ d'\ e'$ upon the radials drawn from E to A, B and C, so that a' falls upon EA, b' upon EB, and c' upon EC, it will assume the position $a_1\ b_1\ c_1\ d_1\ e_1$, and the second ellipse (E_2) will have resolved itself into the lines AC and Ee_1.

The intersection S of the two lines Aa_2 and Ee_1 will locate the station point with reference to the five given points, and by placing the paper strip upon the radials SA, SB, SC, SD, and SE in such a way that a' falls upon SA, b' upon SB, etc., its edge will locate the picture trace.

(4) *To find the elevation (x) of a camera station (S) that has been located by means of the "five-point problem."*—In order to ascertain the elevation of the unknown station S, platted after one of the preceding methods, it will become necessary to know the elevations of at least two of the five points.

Let the elevation of the station S fig. 8 be designated by x.

The elevation of $A = H$ and of $B = H_1$. The ordinates $aa' = y$ and $bb' = y_1$.

From the relation $S'a_1' : S'A_1' = aa' : AA'$;

or

$$Sa' : SA' = y : (H - x)$$

we find

$$y = \frac{Sa'}{SA'}(H - x) \text{ and}$$

$$y_1 = \frac{Sb'}{SB'}(H_1 - x).$$

The difference between y and y_1 may be measured on the negative, hence

$$y - y_1 = m$$

is known, and the value for x may be found from the equation

$$y - y_1 = (H - x)\frac{Sa'}{SA'} - (H_1 - x)\frac{Sb'}{SB'} = m.$$

The values for Sa', SA', Sb', and SB' may be taken directly from the platting sheet, while those for H and H_1 are found in the triangulation records.

If we write the above equation in the general form—

$$\frac{H - x}{n} - \frac{H_1 - x}{o} = m,$$

the elevation x of the camera station S may be computed from—

$$x = \frac{mno - Ho + H_1 n}{n - o}.$$

The numerical values for the ordinates y and y_1 (locating the position of the horizon line on the perspective) may now be computed from the equations—

$$y = \frac{H - x}{n} \text{ and}$$

$$y_1 = \frac{H_1 - x}{o}$$

V. THE THREE-POINT PROBLEM.

If the triangulation points are not sufficiently close together that five or more points may be pictured on one perspective, and if stations are occupied with the camera that are not connected with the trigonometric survey, it will become necessary to employ other means to determine the position of the camera station with reference to the surrounding triangulation points.

In order to connect the camera station with the triangulation system by direct measurements and observations, made at the camera station, it will be requisite that at least three triangulation points be visible from such station, unless the location of the camera station is to be made by observations made from other stations. In the latter case the occupation of two (better three) triangulation points, if favorably located, would suffice to establish the ("concluded") position of the camera station.

The determination of the position of an occupied point by observing upon three fixed and known points is generally known as the "three-point problem," "station platting," "station pointing," or "*Pothenot's* method," although Snellius had used the same method in his trigonometric work in the Netherlands in the second decade of the seventeenth century. Let A, B, and C, fig. 13, be the three points, the positions of which are known. A fourth undetermined point S

may have been occupied from which the horizontal angles $A\ S\ B = M$ and $B\ S\ C = N$ may have been observed instrumentally. The position of S with reference to A, B, and C may then be ascertained in various ways.

(1) *Using the three-arm protractor (mechanical application of the three-point problem).*—The simplest (and crudest) method is purely mechanical in its application. The two horizontal angles M and N are laid off upon a three-arm protractor ("station pointer"), or upon a piece of tracing paper, moving the three radials SA, SB, and SC over the three fixed and platted points A, B, and C until the three radials SA, SB, and SC bisect their corresponding points A, B, and C. Holding the two angles M and N unchanged in this position, the point S is transferred to the working sheet.

(2) *Graphic solution of the three-point problem—*

(*a*) *Using the so-called "two-circle problem."*—Theoretically the best graphic method is that which locates the position of the fourth point S, fig. 13, as the intersection of two circles, one passing through A and B and having all angles of circumference $= ASB = M$ over AB that may be drawn over the line AB as chord, the other circle passing through B and C and having over BC as chord all angles of circumference equal to $BSC = N$.

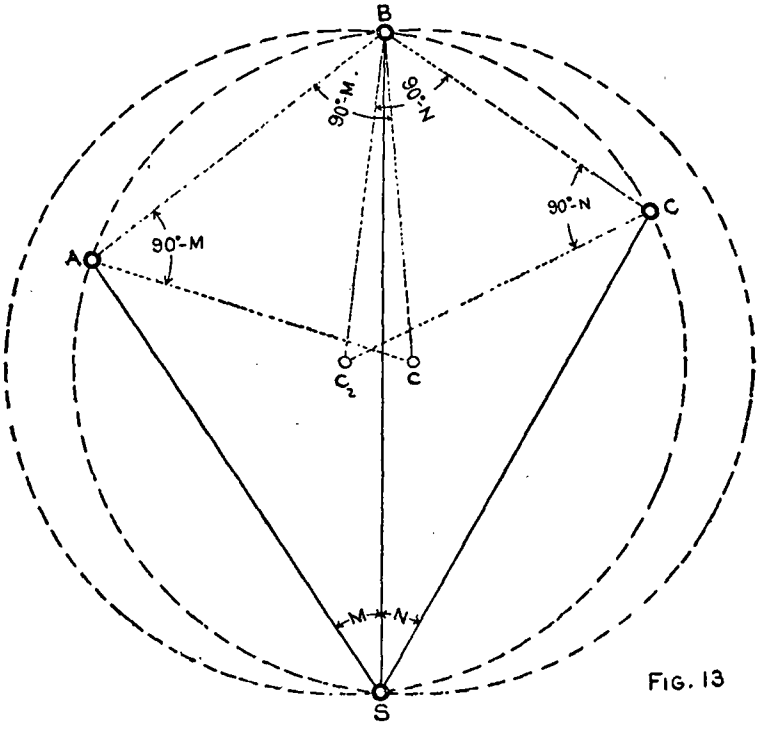

FIG. 13

From the platted triangle side AB we lay off at A and B the angles BAC and ABC_1 each equal to:

$$\frac{180 - 2\,(ASB)}{2} = 90° - ASB = 90° - M$$

and about the point c_1, thus obtained, a circle ABS is described with the radius $= c_1A = c_1B$. The observed angle $ASB = M$ will then be an angle of circumference over AB, and the point S will be located somewhere on the arc over the chord AB.

By means of the angle $BSC = N$ a second circle BCS is described over the triangle side BC, in a similar manner, about c_2 as center with the radius $c_1B = c_1C$. The observed second angle $BSC = N$ will be an angle of circumference over the chord BC, hence the point S will be situated also upon the arc over the chord BC and the true position of S is at the point of intersection S of the two circles.

(*b*) *Using the method of Bohnenberger and Bessel.*—The following constructive method (devised

by Bohnenberger and Bessel) is readily applied and of a very simple character, fig. 14. If we describe a circle through two of the three given points A and B and the station S as the third point the angles

$$ASB = ACB = M \text{ and}$$
$$BSC = BAC = N \text{ (being angles of circumference upon the}$$

same arcs AD and DC respectively).

Hence, if we lay off the observed horizontal angle M on the base line AC at C and the other horizontal angle N on AC at A, the point of intersection D of their convergent sides CD and AD will be on the line connecting the third point B and the platted station S. After having thus found the direction of the line DB the position of S on the line DB may be found as follows:

At any point x of the line DB the observed angles M and N are laid off to either side of DB, in the sense in which they were observed. Lines AS and CS drawn through A and C parallel to xy and xz, respectively, will locate the position of the station S (upon DB) with reference to the three points A, B, and C.

This construction is only recommended when BD is sufficiently long (in fig. 14 it is evidently too short) to admit of a correct prolongation of its direction toward S.

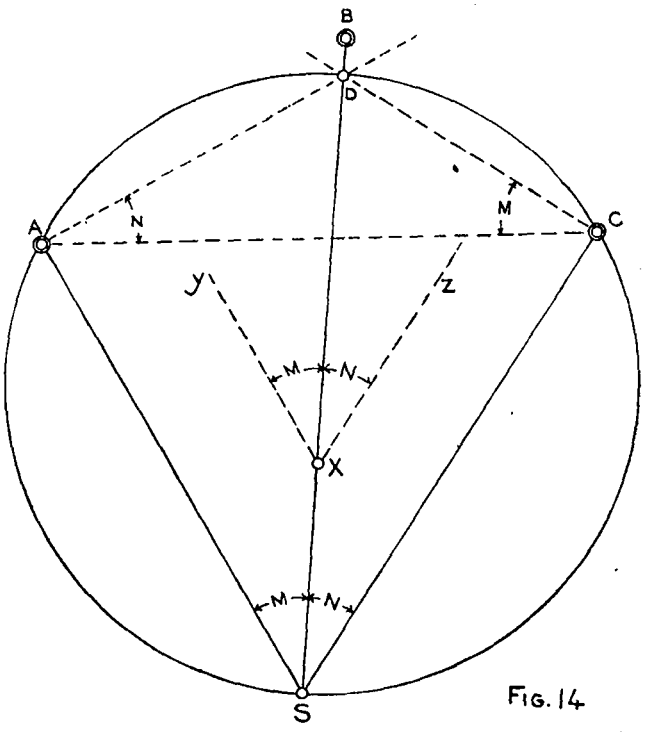

FIG. 14.

The picture trace containing the horizontal projections of the pictured points a, b, and c may now be oriented in the known manner by adjusting the paper strip over the radials SA, SB, and SC.

VI. ORIENTATION OF THE PICTURE TRACES, BASED UPON INSTRUMENTAL MEASUREMENTS MADE IN THE FIELD.

When no points are known of the area to be mapped phototopographically the elements of the perspective (horizon line, principal point, and distance line) can no longer be ascertained from the photograph alone, but instrumental observations will have to be resorted to. This method, having been adopted by Capt. E. Deville, will be described in Chapter III, II, 3, in connection with the Canadian method.

VII. RELATIONS BETWEEN TWO PERSPECTIVES OF THE SAME OBJECT VIEWED FROM DIFFERENT STATIONS ("KERNELPOINTS" AND "KERNELPLANES").

A more generalized application of photogrammetric methods has been inaugurated since Prof. G. Hauck published his investigations and results regarding the relationship existing between systems of three lines, each of the latter being in a different plane. ("Theorie der trilinearen Verwandtschaft ebener Systeme," Journal für reine und angewandte Mathematik, herausgegeben von L. Kronecker und A. Weierstrass, 1883, Bd. 95.)

The practical value of Professor Hauck's deductions had been tested by the students attending his lectures in 1882 during the exercises which are connected with the course in descriptive geometry at the Technical High School in Berlin (Charlottenburg).

(1) *Kernelpoints and kernelplanes.*—In his discussion of the relationship existing between two perspectives of the same object taken from different stations, Professor Hauck has evolved some

properties which may be very useful and of value in iconometric platting. The principal law involved in the application of photogrammetry may be stated as follows:

If two projections (perspectives or photographs) of the same object are projected by perspective rays emanating from the "kernelpoints" ("kernpunkte") as centers the line of intersection of the two planes of projection (picture planes) will be their perspective axis.

With the aid of this law the projection on a third plane of an object may be deduced from the given projections on two planes of the same object. Or, for our case:

If two photographs, MN and $M'N'$, taken from two stations S and S' (and representing the same object), are given, the orthogonal horizontal projection (ground plan) of the same object may be constructed therefrom.

Professor Hauck's methods are also applicable to photographs obtained when the plate was exposed in an inclined position. In order to illustrate the connection existing between two different perspectives of the same object, we will refer to fig. 15, representing the simple case where the two perspective planes (MN and $M'N'$) are vertical.

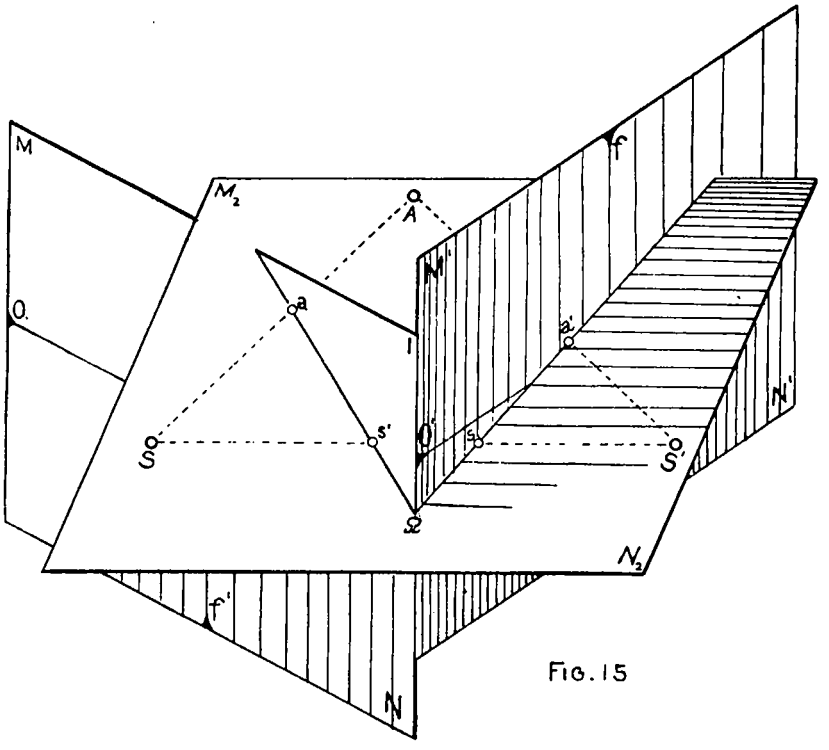

Fig. 15

Let S and S' represent the two camera stations (centers of projection or points of view for the vertical picture planes MN and $M'N'$), s' the picture of S' in MN, s the picture of S in $M'N'$, $I\Omega$ the line of intersection of the two picture planes MN and $M'N'$, a image of the point A in MN, a' image of the point A in $M'N'$.

The two pictured points s and s' are the so-called "kernelpoints" (kernpunkte), and any plane ("kernelplane") passing through the line (base line) SS' will contain the "kernelpoints" s and s'.

The position of the "kernelpoints" may be found graphically by passing a plane ("kernelplane") through the two stations and a third point A (pictured in both planes MN and $M'N'$), which will intersect the first picture plane MN in the line as' and the picture plane $M'N'$ in sa'. Then the following conditions will prevail:

1. The lines of intersection as' and $a's$ will intersect the line $I\Omega$ in one point (Ω).
2. The pictures a and a' of the point A will be on the lines as' and $a's$.
3. The lines as' and $a's$ will pass through the pictures (s' and s) of the two camera stations (S' and S).

The lines $S'A$, SA, SS', as', and $a's$ being situated in the "kernelplane" M_2N_2, all lines as' (for all points of the object pictured in MN) will pass through the picture s' ("kernelpoints") of the second camera station S', and all lines $a's$ (for all points of the object pictured in $M'N'$) will pass through the picture s of the first camera station S. Furthermore, all lines (as' and $a's$) joining the two perspectives (pictures) of identical points (A) with the corresponding "kernelpoints" (s' and s) will intersect the line of intersection ($I\Omega$) of the two picture planes (MN and $M'N'$) in the same point (Ω).

Therefore, if two photographs (MN and $M'N'$) of the same object (A) contain the pictures (s' and s) of their reciprocal stations (S' and S), conditions peculiarly adapted for the facilitation

of the iconometric constructions will arise, inasmuch as such pictured stations (s and s') will be "kernelpoints."

The line of intersection ($I\Omega$) of the two picture planes (MN and $M'N'$) may also play an important part in the iconometric platting, not only for pictures exposed in vertical planes, but even more so when they are exposed in inclined planes.

If two pictures MN and $M'N'$ are given (in fig. 16 their traces are represented as HH and $H'H'$, respectively) representing the same object (viewed from two stations S and S'), then the pictures s and s' ("kernelpoints") of the reciprocal camera stations may be located upon the picture planes by construction (if they are not shown in the field of the pictures), as shown in fig. 16.

The horizontal projections (s_1 and s_1') of the "kernelpoints" (s and s') are identical with the points of intersection of the base line (SS') and the pictures traces (HH and $H'H'$). The horizontal projections of the line of intersection ($I\Omega$, fig. 15) of the two picture planes (MN and $M'N'$) will be represented by the point of intersection (i) of the two picture traces (HH and $H'H'$).

Hence, if we revolve the picture planes about their ground lines until they fall within the horizontal plane of the ground plan, the line $I\Omega$, fig. 15 (common to both picture planes), will be represented by the lines $i(I)$, fig. 16, and the "kernelpoints" s and s' of the revolved planes will fall upon the lines $s_1(s)$ and $s'_1(s')$, respectively. (These lines are perpendiculars upon the picture traces (HH and $H'H'$) in the horizontal projections of the "kernelpoints".)

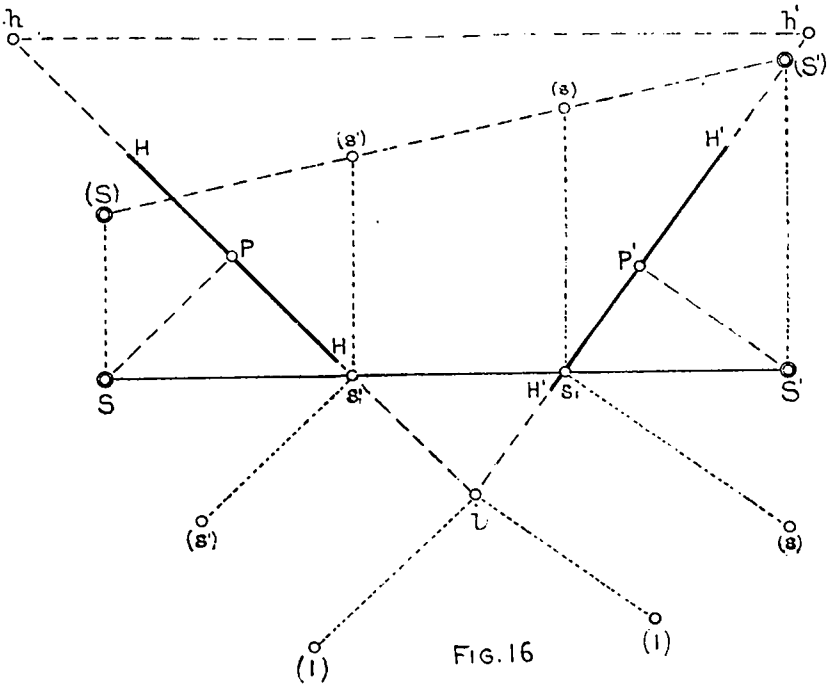

FIG. 16

To find the lengths $s_1(s)$ and $s'_1(s')$ (ordinates of the "kernelpoints" in the picture planes), perpendiculars are erected in S and S', fig. 16, and their lengths are made equal to the elevations of the respective camera horizons above the ground plane $= S(S)$ and $S'(S')$, respectively. The line $(S)(S')$, connecting the camera stations S and S' (in fig. 16 the vertical plane passing through the camera stations S and S' has been revolved about the horizontal projection of the base line SS' until it coincides with the horizontal ground plane) will intersect the lines $s_1(s)$ and $s'_1(s')$ (which are perpendicular to the horizontal projection of the base line in the "kernelpoints" s_1 and s'_1), and the lengths $s_1(s)$ and $s'_1(s')$ will equal the ordinates of the kernelpoints. In this manner the "kernelpoints" may be located in the picture plane of any photograph.

(2) *Use of the line of intersection ($I\Omega$) of two picture planes (MN and $M'N'$) which show identical objects viewed from two different stations (s and s').*—If a series of characteristic points of the terrene, pictured in a vertical picture plane MN, fig. 17, are connected with the "kernelpoint" s by straight lines, these will (when prolonged) intersect the line $I\Omega$, and if the pictures of the identical points in the vertical picture plane $M'N'$ are joined with the "kernelpoint" s', and if these lines are likewise prolonged to intersect the line ($I\Omega$), forming the intersection of the two picture planes (MN and $M'N'$), the series of intersections of $I\Omega$ with the first group, belonging to MN, will be identical with the intersections of $I\Omega$ with the second group of lines, belonging to $M'N'$.

If we now imagine the line $I\Omega$ provided with a scale of equal parts, with zero in the ground plane GG, fig. 17, lines drawn through the "kernelpoints" and identical points of objects pictured

in both picture planes (MN and $M'N'$) will intersect identical points of the scale. The space (OO') intercepted on the scale by the horizon lines of the two picture planes will represent the difference in elevation between the two camera stations (S and S'). This scale may be drawn to show on both lines $I\Omega$ of the pictures when separated.

The picture (photograph) itself frequently may not be sufficiently extended to contain the line $I\Omega$, in which case the scale may still be utilized by laying it off on a line xx'' on picture MN and on a line zz'' on picture $M'N'$, where xx'' and zz'' are parallel with the line of intersection ($I\Omega$) of the two picture planes MN and $M'N'$ and as long as the following relation remains fulfilled:

$$s\Omega : sx' = s'\Omega : s'z'$$

For a second point B pictured as b and b' on the two picture planes MN and $M'N'$, respectively, the following proportions must stand:

$$s\beta : sx_0 = s'\beta : s'z_0$$

From the similarity of the triangles sx_0x', $s\beta\Omega$, $s'z_0z'$, and $s'\beta\Omega$, we find:

$$x_0x' = z_0z'$$

($\beta\Omega$ being common to both triangles $s\beta\Omega$ and $s'\beta\Omega$), which means the spaces on the scales xx'' and

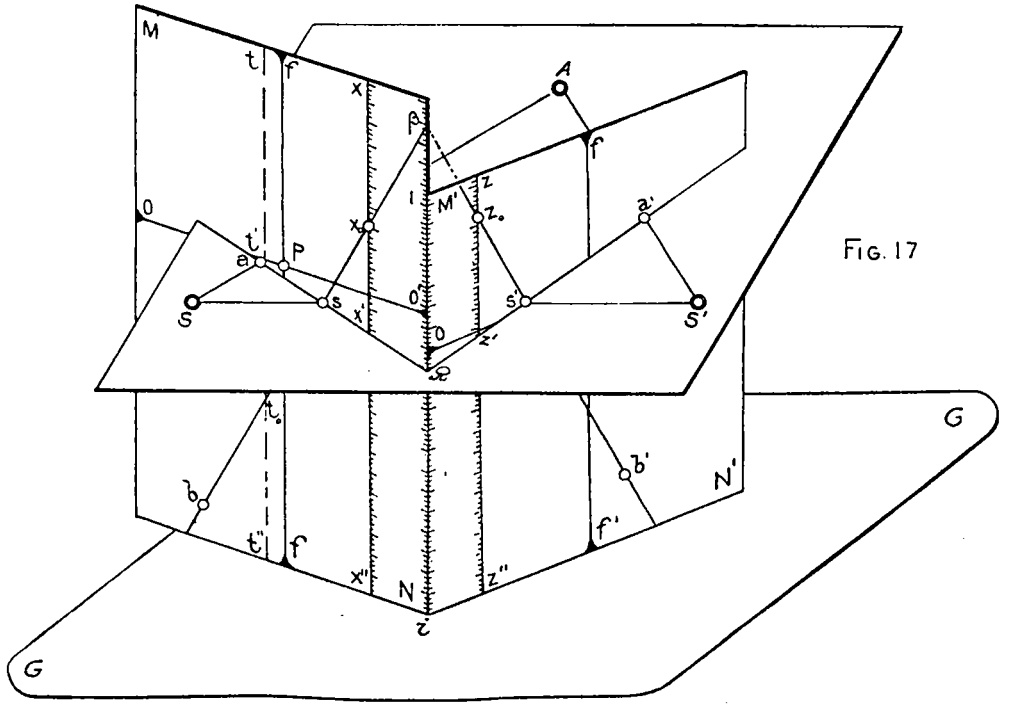

FIG. 17

zz'' are the same in numerical value. The two scales (or one of them) may also be placed beyond s and s'—for example, at tt''—in which case:

$$s\beta : st_0 = s\beta : sx_0$$
$$= s'\beta : s'z_0$$

when the scale tt'' should be read in the directions from t' toward t_0. It may generally be stated that the scales should be placed parallel to $I\Omega$ and at distances from the "kernelpoints" in proportion to the distances from the latter to the line of intersection of the picture planes, their correct positions being best found graphically from the horizontal projection or from the ground plan. To avoid the obscuring of details on the photographs it is recommended to draw these scales outside of the picture proper.

To find the best position of the second scale on the second picture, graphically, after the position for the first scale on the first picture has been decided upon, we will again refer to fig. 16,

where HH and $H'H'$ = picture traces, S and S' = horizontal projections of the camera stations, I' and P' = traces of the principal lines ff and $f'f'$, and h = selected positions for the first scale.

To find the corresponding position of the second scale, draw a line hh' parallel to SS' through h,

$$s'_1 i \;:\; s'_1 h = s_1 i \;:\; s_1 h'$$

whence $s_1 h'$ = distance of the second scale from the "kernelpoint" s_1 in the second picture plane.

The conditions and relations just described, and first discussed by Prof. G. Hauck, may often serve with advantage in iconometric platting (in the following we will refer to them again).

For example: If we consider the case of a straight line L, fig. 18, shown on MN as l, of which, however, only the short piece l' is pictured on $M'N'$, and it is desired to locate a point x, identified on l in MN, but falling on the prolongation of l' outside of the picture limit of $M'N'$, we may proceed as follows:

The pictured point x on l in MN is connected with the "kernelpoint" (s') and this line $(s')\,x$ is prolonged to intersect Ii in (x). After transferring this point (x) to the line $i\,I$ of the second

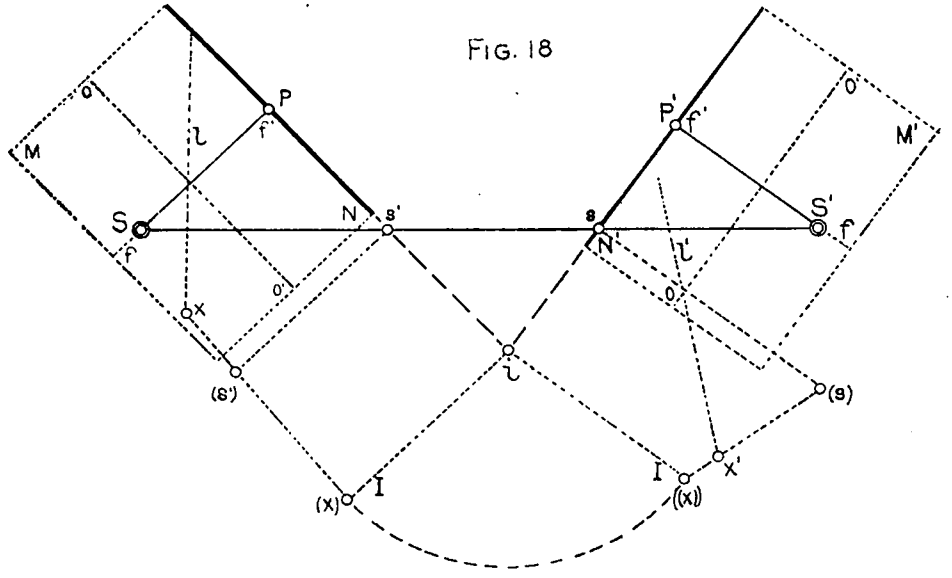

FIG. 18

picture plane $M'\,N'$ to $((x))$, the latter point is connected with the "kernelpoint" (s), and the intersection of $((x))\,(s)$ and line l' will be the point sought, x', of the prolonged line l'.

VIII. TO PLAT A FIGURE, SITUATED IN A HORIZONTAL PLANE, ON THE GROUND PLAN BY MEANS OF ITS PERSPECTIVE.

In topographic surveys, figures in level planes are not frequently dealt with, except when locating the outlines of lakes and marshes, including coast lines, and the simplest way to plat these would be to expose photographic plates (held in a horizontal position) from a balloon at points of known positions and at identical or known elevations.

The platting of such figures, when photographed on vertically exposed (also inclined) plates from stations higher than the figure's plane, will also be an easy matter. It may even be accomplished if but one view of such figure had been obtained from only one station (of a known position), provided the difference in elevation between the camera station and the figure's (horizontal) plane, the principal point, and the focal length of the view are known.

With reference to fig. 19: $H\,H$ = Horizon plane of the camera station S, $M\,N$ = Picture plane (vertical), $G\,G$ = Ground plane or horizontal plane coinciding with the surface of the lake $A\,B\,C\,D$, $S\,S_0 = h$ = difference in elevation between the camera station S and the surface of the water in the lake $A\,B\,C\,D$.

From the picture $a\ b\ c\ d$ (of the lake $A\ B\ C\ D$) with focal length = SP and known difference in elevation = h the horizontal projection of the lake $A\ B\ C\ D$ is to be plotted.

The ground line $O_o\ O_o'$ (intersection of ground plane $G\ G$ and picture plane $M\ N$) is drawn through P_o parallel to the horizon line $O\ O'$ ($P\ P_o = h$, measured in the platting scale). If we now project the pictured points a, b, c, and d upon $O_o\ O_o' = a_o$, b_o, c_o, and d_o, and draw radials from the platted station S_o through the points a_o, b_o, c_o, and d_o, they will pass through the points A, B, C, and D (which are to be platted), and the latter could be located if their distances from S_o were known.

We now regard the vertical plane, passing through the camera station S and pictured point a, which intersects the ground plane in the line $S_o\ a_o$ or in $S_o\ A$. From the similar triangles $S\ S_o\ A$

FIG. 19

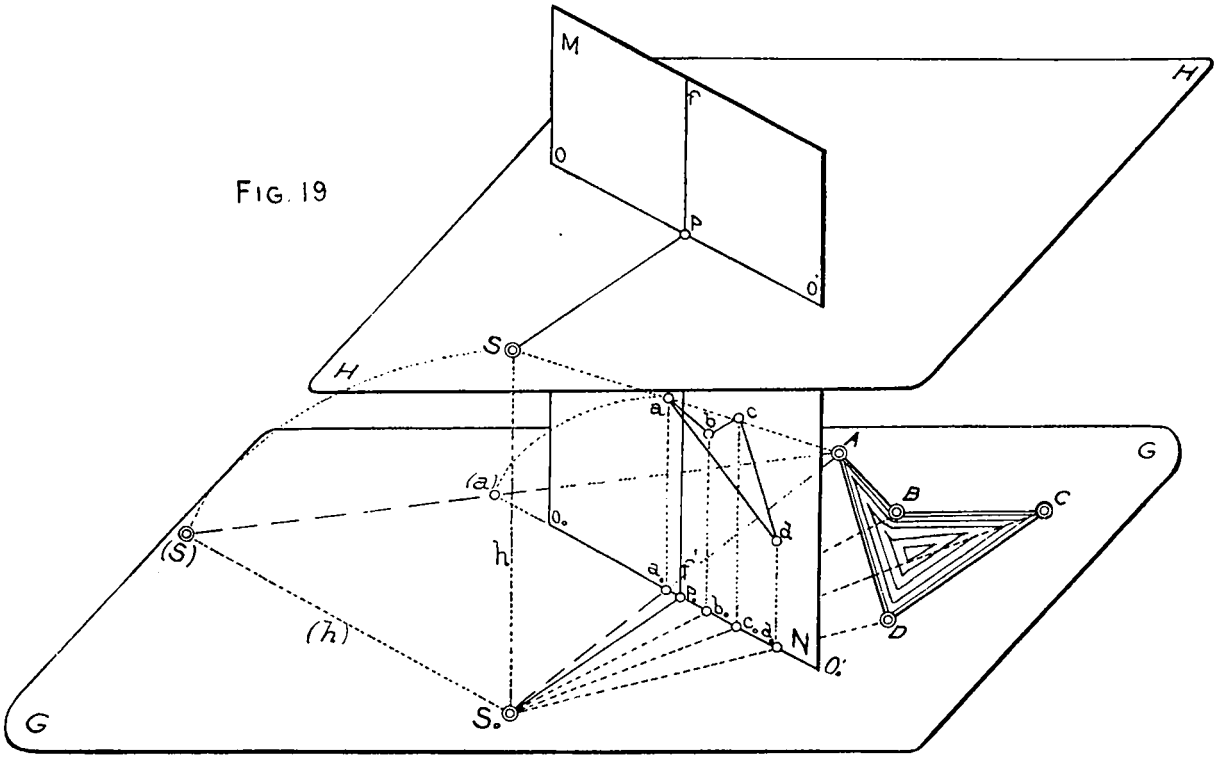

and $a\ a_o\ A$ we can find the distance $S_o\ A$ (the horizontal distance from the camera station to the point sought, A) either graphically or arithmetically.

When the vertical plane SS_oA is revolved about S_oA until it coincides with the ground plane GG, the points S and a will assume the positions (S) and (a) respectively, in the ground plane, and the line connecting (S) and (a) will pass through the point A of the lake. Hence, A may be located in the ground plan as the intersection of $(S)(a)$ with S_oa_o.

The same may be done for the points B, C, and D by revolving the vertical planes SS_oB, SS_oC, and SS_oD about S_ob_o, S_oc_o, and S_od_o, respectively, into the ground plane to locate the positions of B, C, and D.

To avoid a multiplicity of lines on the working or platting sheet, these constructions are preferably made on a separate sheet of paper, and the following construction may be adopted:

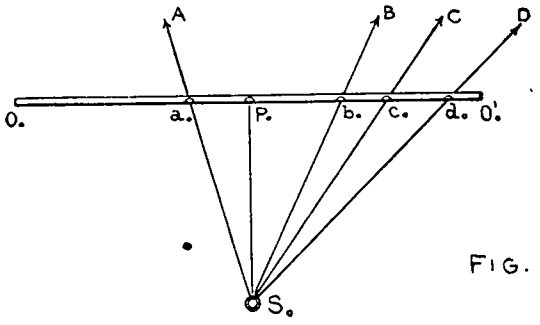

FIG. 20

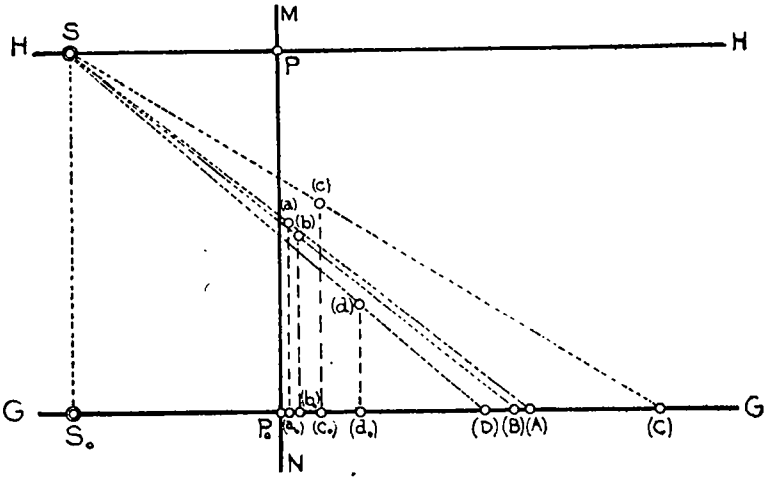

The vertical planes S_0a_0, S_0b_0, S_0c_0, and S_0d_0 may be revolved about SS_0 as axis until they all coincide with the principal plane $SS_0\,PP_0$ (fig. 20), where the paper surface may represent the principal plane.

HH = trace of the horizon plane in the principal plane.

MN = trace of the picture plane in the principal plane.

GG = trace of the ground plane in the principal plane.

SS_0 = difference in elevation between the station S and the ground plane (surface plane of the lake $ABCD$), measured in the platting scale.

$SP = S_0P_0$ = true length of the focal distance for the photograph MN.

The radials S_0a_0, S_0b_0, S_0c_0, and S_0d_0 are laid off upon the line GG from S_0. The verticals $(a_0)(a)$, $(b_0)(b)$, $(c_0)(c)$, and $(d_0)(d)$ are made equal to the ordinates aa_0, bb_0, cc_0, and dd_0 (measured on the picture). Radials drawn from S through (a), (b), (c), and (d) will cut off on the line GG the horizontal distances $S_0(A)$, $S_0(B)$, $S_0(C)$, and $S_0(D)$, equal to the horizontal distances S_0A, S_0B, S_0C, and S_0D, measured in the platting scale. If these distances are laid off upon the radials S_0a_0, S_0b_0, S_0c_0, and S_0d_0 the positions of the characteristic points A, B, C, and D of the lake will be platted in the scale of the map with reference to the ground line $O_0O'_0$ (which on the platting sheet is identical with the picture trace) and the platted station S_0.

The same result may be arrived at by utilizing the orthogonal projection of the points a, b, c, and d and A, B, C, and D in the principal plane, instead of revolving the vertical planes into the principal plane.

With reference to fig. 21: PP = Principal plane, MN = Picture plane, HH = Horizon plane (containing camera station S), GG = Ground plane or surface plane of the lake.

If we draw the radials S_0a_0, S_0b_0, S_0c_0, and S_0d_0 from S_0 (orthogonal projection of S in GG) through the orthogonal projections a_0, b_0, c_0, and d_0 of the pictured points a, b, c, and d on the ground line O_0O_0', the points sought will be situated upon those radials.

If we now project the points a, b, c, and d (in the picture plane) upon the principal line $= \alpha$, β, γ, and δ, the radials $S\alpha$, $S\beta$, $S\gamma$, and $S\delta$, drawn in the principal plane PP, will locate the

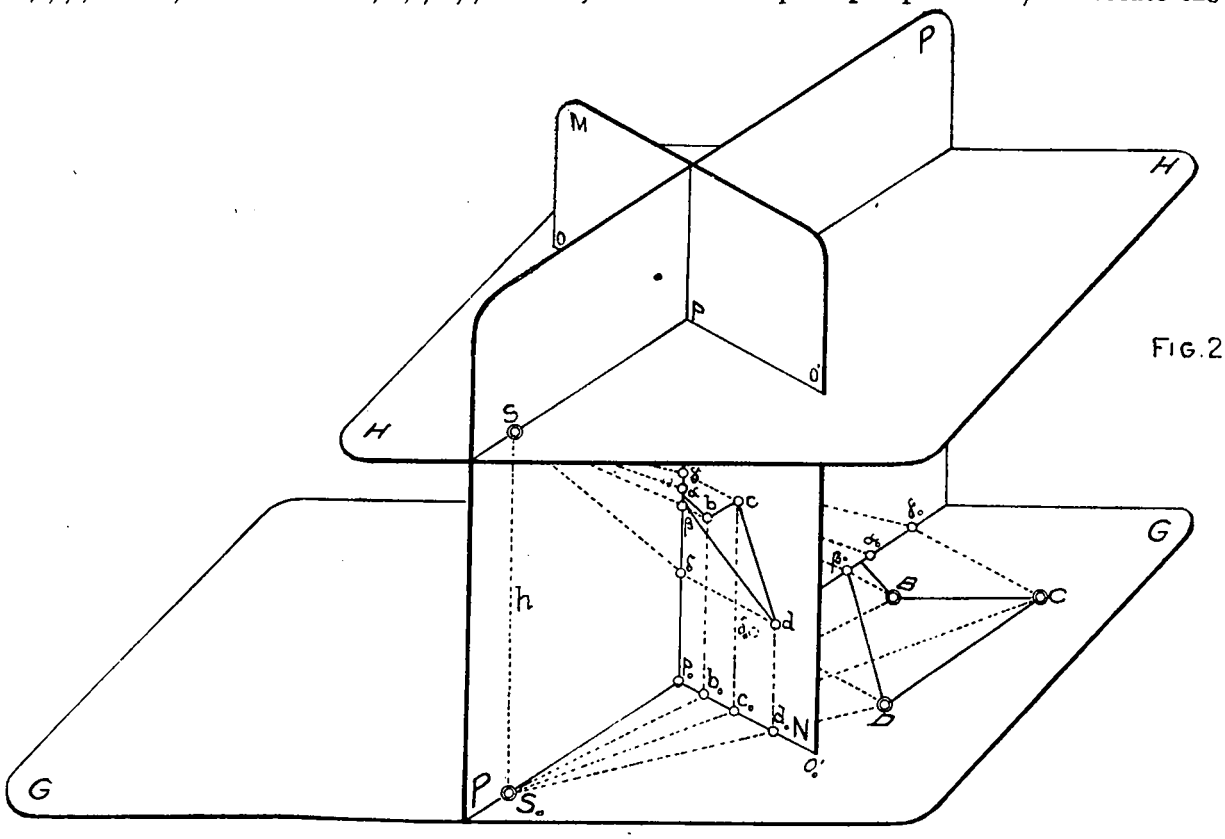

FIG. 21

points α_o, β_o, γ_o, δ_o upon the line S_oP_o (in the ground plane), they are the orthogonal projections of the points A, B, C, and D in GG upon S_oP_o. The points A, B, C, and D in the ground plane may therefore be found by erecting perpendiculars upon S_oP_o in α_o, β_o, γ_o, and δ_o. The intersec-

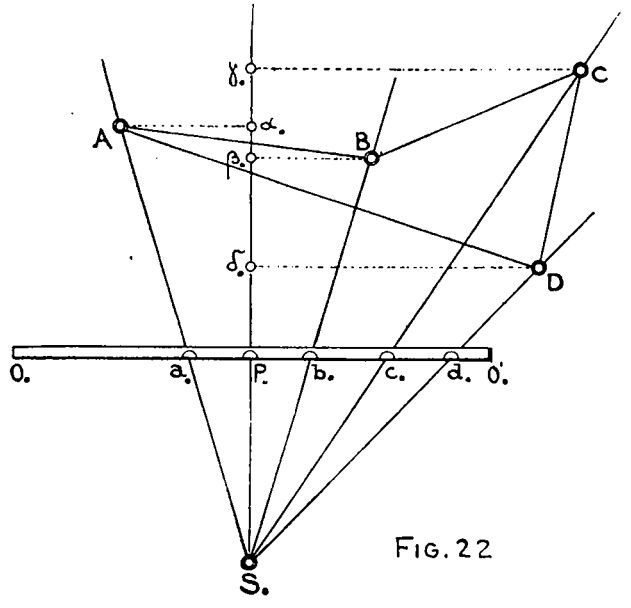

FIG. 22

tions of these with the radials S_oa_o, S_ob_o, S_oc_o, and S_od_o will locate the positions of the points A, B, C, and D on the platting sheet.

This construction is also preferably made on a separate sheet of paper. The radials $S_o a_o$, $S_o b_o$, $S_o c_o$, and $S_o d_o$, fig. 22, are drawn through their corresponding points on the platted picture trace (or ground line) $O_o O_o'$, and the rest of the construction (fig. 23) is made by regarding the paper surface as the principal plane. The designations are the same as in fig. 20. The points δ, β, α,

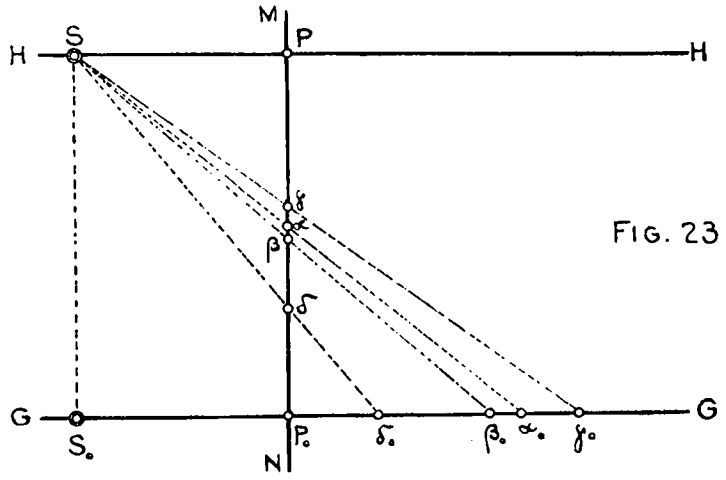

FIG. 23

and γ, fig. 23, on the line PP_o (principal line) represent the projections of the pictured points a, b, c, and d in the principal plane; hence, their positions are found by transferring the ordinates of the pictured points to PP_o from P_o:

$$P_o\,\delta = dd_o;\ P_o\,\beta = bb_o;\ P_o\,\alpha = aa_o,\text{ and } P_o\,\gamma = cc_o$$

The radials from S through δ, β, α, and γ locate the points δ_o, β_o, α_o, and γ_o on the line GG (or $S_o P_o$), fig. 23.

By transferring the distances $S_o\delta_o$, $S_o\beta_o$, $S_o\alpha_o$, and $S_o\gamma_o$, fig. 23, to the line $S_o P_o$ from S_o, fig. 22, and drawing lines through δ_o, β_o, α_o, and γ_o parallel with $O_o O_o'$, their intersections with the corresponding radials $S_o d_o$, $S_o b_o$, $S_o a_o$, $S_o c_o$ will locate the platted positions of the points D, B, A, and C of the lake.

IX. TO DRAW A PLANE FIGURE ON THE GROUND PLAN, BY MEANS OF THE SO-CALLED "METHOD OF SQUARES," IF ITS PERSPECTIVE AND THE ELEMENTS (POINT OF VIEW AND DISTANCE LINE) OF THE VERTICAL PICTURE PLANE ARE GIVEN.

If we imagine the figure covered with a net of squares, one set of its sides being parallel with

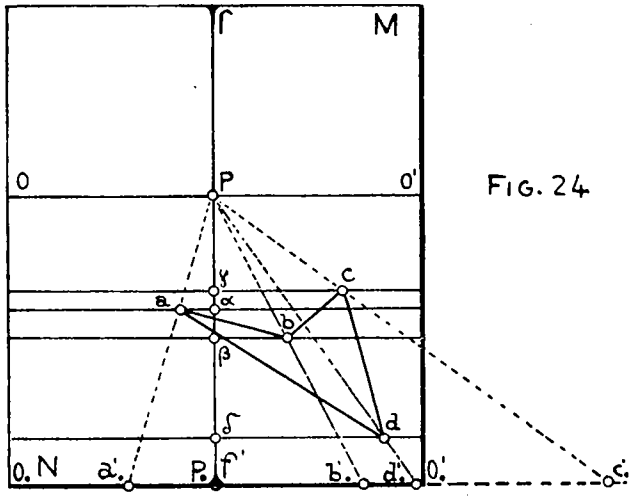

FIG. 24

and the other set being perpendicular to the ground line, such net may be utilized to draw the outline of the figure upon the ground plan, it being only necessary to cover the pictured figure

a b c d with the perspective of the selected net in the ground plane, i. e., the lines forming the squares of the perspective must have the proper relation to the principal ray and horizon line.

The simplest disposition of the lines (forming the auxiliary network) for locating the figure is the one mentioned above (parallel with and perpendicular to O_0O_0'), but any other selection may be made. The squares may be of equal size or not, and the directions of the lines composing the network may be given any direction.

In fig. 24, in illustration of this method, the lines in the perspective which correspond to the

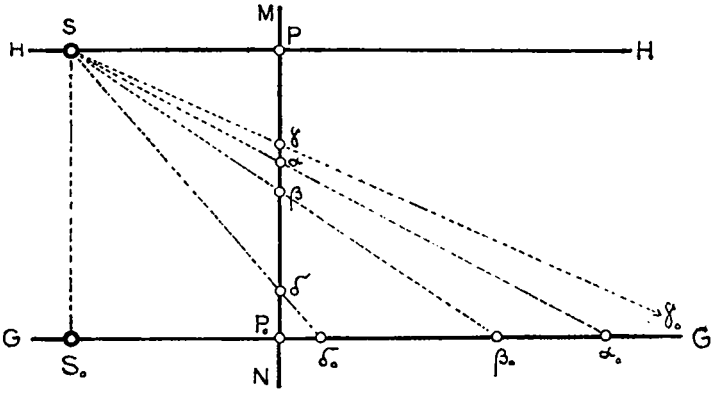

FIG. 25

sides of the rectangles that are perpendicular to the ground line O_0O_0' will vanish in the principal point P, and those parallel with the ground line O_0O_0' will be parallel with the horizon line OO'. Selecting the lines of this network so that two lines of each system will pass through one of the

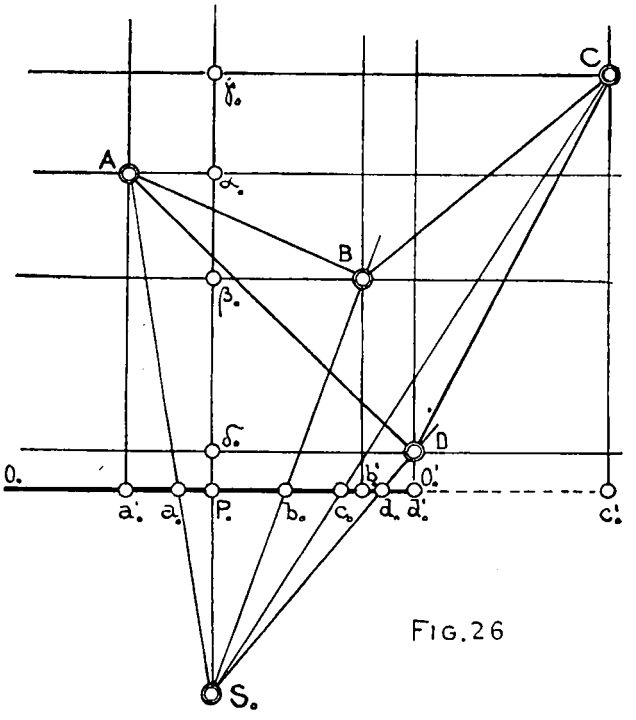

FIG. 26

characteristic points of the figure *abcd*, the perspective of this net will appear as shown in fig. 24, where O_0O_0' represents the ground line of the picture plane MN.

If we now plat the principal plane SS_0P_0P, fig. 25, retaining the same designations as for fig. 20, the points δ_0, β_0, α_0, and γ_0 will represent (in the ground plane) the intersections, with the horizontal projection of the principal ray SP ($= S_0P_0$), of those net lines that had been drawn through D, B, A, and C parallel with the ground line.

After platting the picture trace O_0O_0' (of the perspective MN, fig. 24) in the ground plane by means of the radials S_0a_0, S_0b_0 . . . . . , the distances $S_0\delta_0$, $S_0\beta_0$ . . . . . (fig. 25) laid off upon S_0P_0, fig. 26, will locate those net lines (parallel with O_0O_0') in the ground plane which correspond to the lines $d\delta$, $b\beta$ . . . . shown in the perspective MN, fig. 24.

If we now transfer the points a_0', P_0, b_0', d_0', and c_0' from fig. 24 to a strip of paper, and place this upon the picture trace O_0O_0', fig. 26, that the points P_0 will coincide, the lines $a_0'A$, $b_0'B$, . . . drawn parallel with S_0P_0 will represent the net lines which are perpendicular to the ground line $O_0O'_0$.

Thus the platted positions of the points A, B, C, and D are located on the ground plane by the intersections of the corresponding net lines of both systems, as shown in fig. 26.

The points A, B, C, and D will, of course, also be bisected by the radials S_0a_0, S_0b_0 . . . . . , which fact may make it more advantageous to select some other disposition of the net lines for a figure of a different shape.

When the figure has a sinuous perimeter the squares of the network should be selected of a size sufficiently small to enable the draughtsman to draw the perimeter sections falling within the squares sufficiently accurate to obtain a correct representation of the general outline.

X. THE VANISHING SCALE.

We had seen, fig. 26, that the radials drawn from the so-called "foot of the station" (S_0) represent the directions to the points A, B, C . . . . in the ground plane, and if we could determine the distances S_0A, S_0B . . . . (from the foot of the station S_0 to the points to be platted A, B, ...) from the perspective in some manner the location of the platted positions in the ground plane would become an easy matter.

The distances S_0A, S_0B . . . . . , fig. 26, may be determined from the perspective by means of the so-called vanishing scale, which may be constructed as follows, fig. 27:

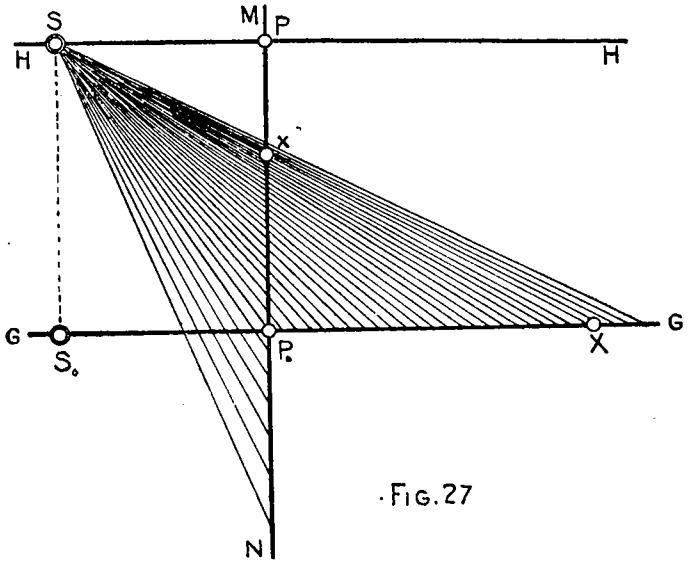

Fig. 27

MN = trace of picture plane in the principal plane, HH = trace of horizon plane in the principal plane, GG = trace of ground plane in the principal plane, SS_0 = elevation of the station S above the ground plane GG, or above the foot of the station S_0.

A scale of equal parts is laid off upon GG, to either side of P_0, and radials are drawn from S through the graduation points of the scale; their intersections with MN form the vanishing scale, which may serve to locate distances from the foot of the station to points to be platted in the ground plane.

The picture trace O_0O_0', fig. 28, may have been platted and the radials S_0a_0, S_0b_0, ... may have been drawn on the working sheet.

It is desired to locate the position of a point, A, in the ground plane by means of the vanishing scale and the picture a, fig. 29, of the point A.

Take the ordinate aa_0 from the perspective MN, fig. 29 (vertical distance of a above the ground line O_0O_0'), and lay it off upon the vanishing scale (fig. 27), PP_0 from $P_0 = P_0x$.

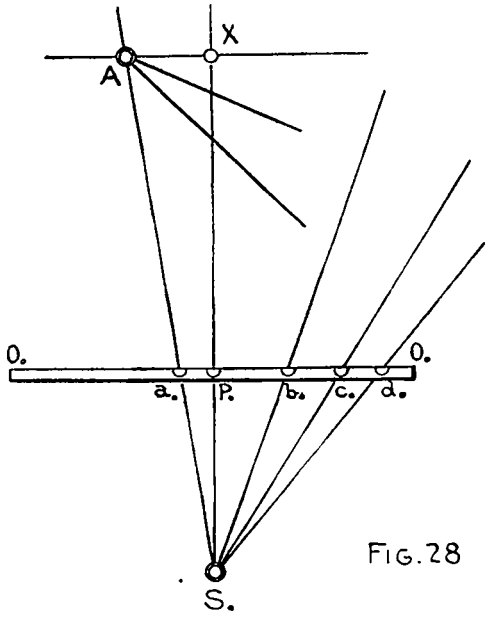

FIG. 28

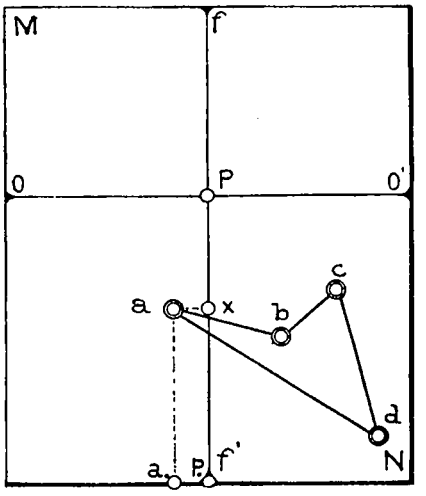

FIG. 29

The line ax, fig. 29, parallel with the horizon line OO' and passing through a in the perspective, corresponds with the line AX, fig. 28, parallel with the ground line and passing through A in the ground plane.

Hence, if we lay off S_0X, fig. 27, upon S_0P_0 from S_0, fig. 28, the point A (in the ground plane) will be situated upon the line XA, fig. 28, drawn through X and parallel with the ground line O_0O_0'. The intersection of the radial S_0a_0 with this line XA, fig. 28, will be the point A.

CHAPTER II.

PHOTOGRAPHS ON INCLINED PLATES.

In the preceding we have regarded photographic plates (perspectives) only that had been exposed in a vertical plane, and although the use of inclined plates for phototopographic purposes is not to be generally recommended (on account of the complications that will arise in the ordinarily simple constructions in iconometric platting from vertically exposed plates, and because the relations which exist between the elements of the perspective and the orthogonal projection in horizontal plan of the pictured objects will not be so readily recognized), still, occasions may arise where the selection of the available or accessible stations will be so circumscribed that the exposure of inclined plates will become necessary in order to control the inaccessible terrene (above or below the camera station).

Photographs may also have been obtained with an ordinary camera, without any device for adjusting the plate in vertical plane, or the use for iconometric platting of the photographs (perhaps taken only for illustrative purposes) may have been an afterthought.

With reference to fig. 30 we have:

PP = principal plane.
HH = horizontal plane passing through the second nodal point of the camera lens (at the station S).
GG = ground plane.
MN = picture plane.
$O'P$ = trace of picture plane MN, in the horizon plane HH.
O'_0P_0 = ground line of picture plane MN.
S_0 = foot of the station S.
$P'P_0$ = principal line of the picture plane.
P' = principal point of the perspective MN.
SS_0 = vertical of the station; it will penetrate the picture plane MN above (or below) the horizon line at s. The trace s of this vertical sS_0 in the picture plane is the vanishing point for the perspectives of all vertical lines that may be pictured on MN.
$P'SP = PsS = \alpha$ = angle of inclination of the plate MN.
SP = (horizontal) line from S perpendicular to horizon line $O'P$.
SA = line of direction from S to a point A, pictured in MN as a.

If we revolve SP, in the vertical plane PP, about P until SP falls within the picture plane, then the point S will fall into (S) and the line Sa will fall into $(S)a$.

The vertical plane containing the line SA and passing through SS_0 will intersect the ground plane in S_0a_0. If we now revolve the line S_0P_0, in the vertical plane PP, about P_0 until S_0P_0 falls within the picture plane MN, then the point S_0 will fall into (S_0) and the trace S_0a_0 will have assumed the position $(S_0)a_0$, and the intersection A of the trace S_0a_0 with the line of direction Sa will locate the platted position of the pictured point a in the ground plane GG.

The line sa intersects the ground line in a_0, and S_0a_0 will be the radial in the ground plane to the platted position of A and passing through the foot S_0 of the station S.

To find A on S_0a_0 we first locate in the picture plane the intersection (A) of the revolved lines $(S)a$ and $(S_0)a_0$. This point (A) revolved in the vertical plane a_0S_0S about a_0 will locate A upon S_0a_0.

To locate the position of A in GG, in the manner just shown, we should know the position of the line $O'P$, as well as the points S and P. These are known or may readily be found if the position of the principal point P', the length of the distance line SP', and the value of the angle of inclination (α) for the plate are known.

When a photographic plate in a surveying camera is intentionally exposed in an inclined position, it will generally be exposed in such a way that the principal line ff' still coincides with the intersection of the picture plane MN and the principal plane PP, fig. 30.

When the angle of inclination α is an angle of elevation (depression) the horizon line (intersection of horizon plane and inclined picture plane) will fall below (above) the line representing the horizon line on the plate when exposed vertically. In order to use the inclined plate for

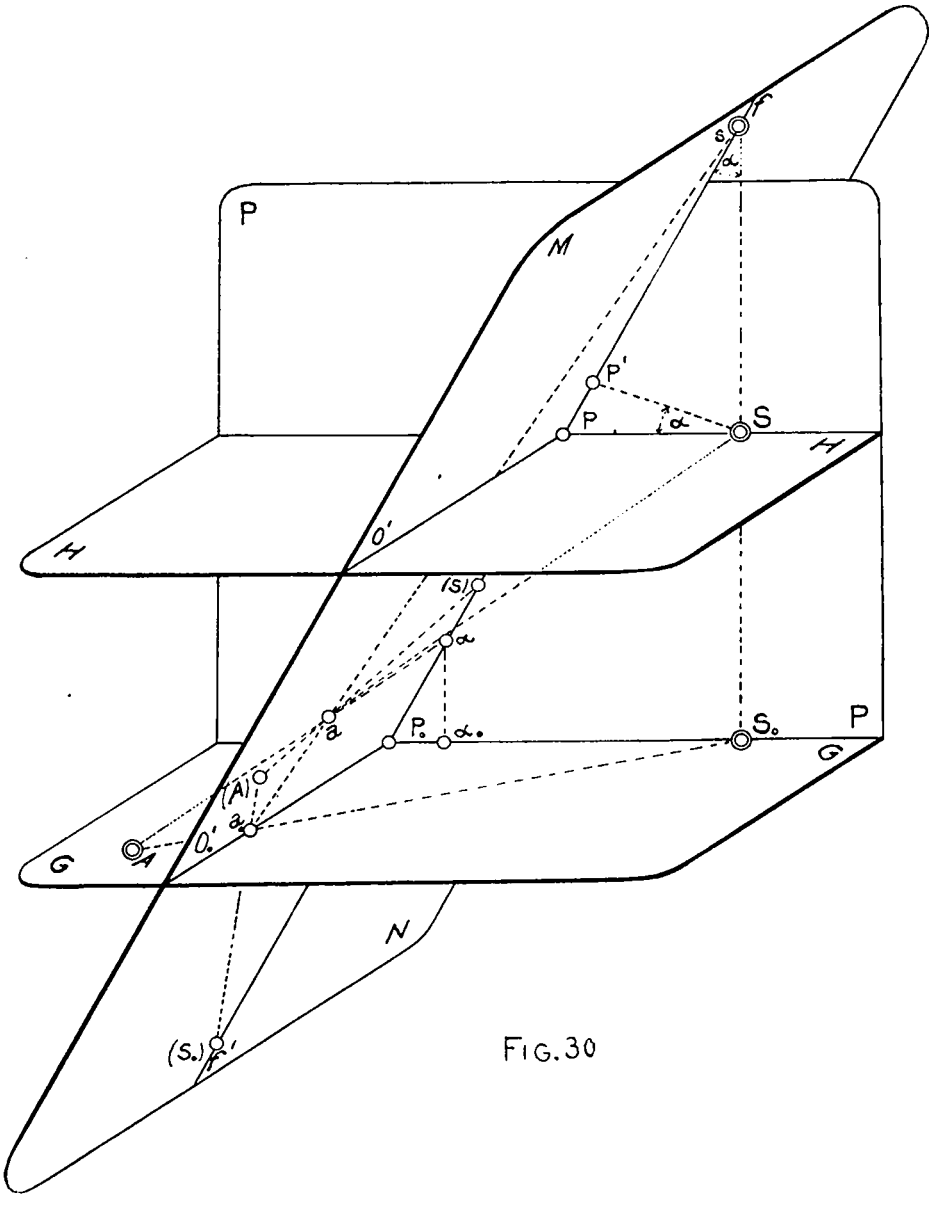

FIG. 30

iconometric purposes the angle of inclination should be observed directly in the field, and, if the constant focal length of the camera ($=f$) is known, the line SP, fig. 30, may be found as the hypothenuse of the right-angle triangle with angle $= \alpha$ and adjoining side $= f$.

I. TO PLAT THE PICTURE TRACE OF AN INCLINED PLATE.

In order to plat the picture trace the horizontal angle, included between the optical axis of the inclined camera and the horizontal direction to some known point, should be measured. Should the length SS' (elevation of station S above the foot of the station, fig. 32), the position of

the line connecting two camera stations, and also the position of a third point A (visible from both stations) be known, no horizontal angle α needs to be measured instrumentally, provided the plates containing the picture a of the third point A are oriented in such a way that the picture a be bisected by the vertical thread or principal line ff' of the perspective.

With reference to fig. 31 we have

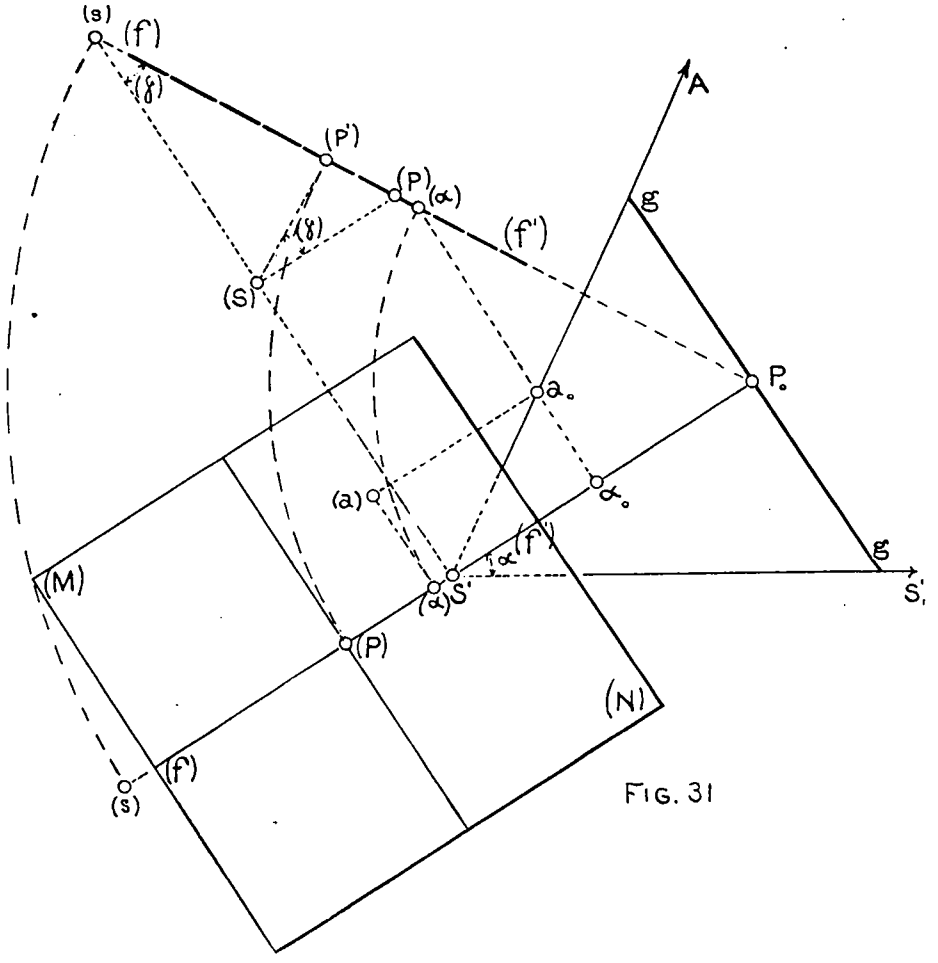

FIG. 31

S' = platted position of the station S

$S'S_1'$ = platted length and direction of the base line.

The horizontal angle α (at S') included between this line of direction $S'S_1'$ and the principal plane (or horizontal projection of optical axis $S'P_0$) may have been observed in the field. The line $S'S$ in fig. 32 represents the elevation of the station S (laid off in the platting scale). If we revolve this line $S'S$ about $S'P_0$ into the platting plane it will assume the position shown as $S'(S)$ in fig. 31. After erecting at (S) a line $(S)(P)$ perpendicular to $S'(S)$ the angle of inclination γ of the plate MN is laid off upon $(S)(P)$ from (S).

$(S)(P')$ is made equal to the constant focal length $(=f)$ of the camera, and the line drawn perpendicular to $(S)(P')$ through (P') will represent the principal line $(f)(f')$ of the perspective MN, revolved about $S'P_0$ into the platting plane. The point of intersection (s) of $(S)S'$ with $(f)(f')$ represents the vanishing point for all vertical lines shown on the picture.

The point of intersection P_0 of the line $(f)(f')$ and the horizontal projection of the optical axis $S'P_0$ will be the trace in the ground plane of the inclined principal line ff'.

The line P_0g, perpendicular to $S'P_0$ in P_0, is the ground line or the trace of the inclined picture plane MN in the platting plane GG.

II. PLATTING THE LINES OF DIRECTION TO POINTS PICTURED ON AN INCLINED PHOTOGRAPHIC PLATE.

The inclined picture plane MN, fig. 32, is revolved about P_0g into the drawing or ground plane, when the picture will appear as $(M)(N)$, the principal point P falling upon $S'P_0 = (f)(f')$ in (P) and $(P)P_0 = PP_0$.

To plat the direction to a point A from S', we first locate the orthogonal projection a_0 (in the ground plane) of the pictured point a, fig. 31.

The image point a, fig. 32, projected upon ff' or upon $PP_0 = \alpha$ and a circle described about

FIG. 32

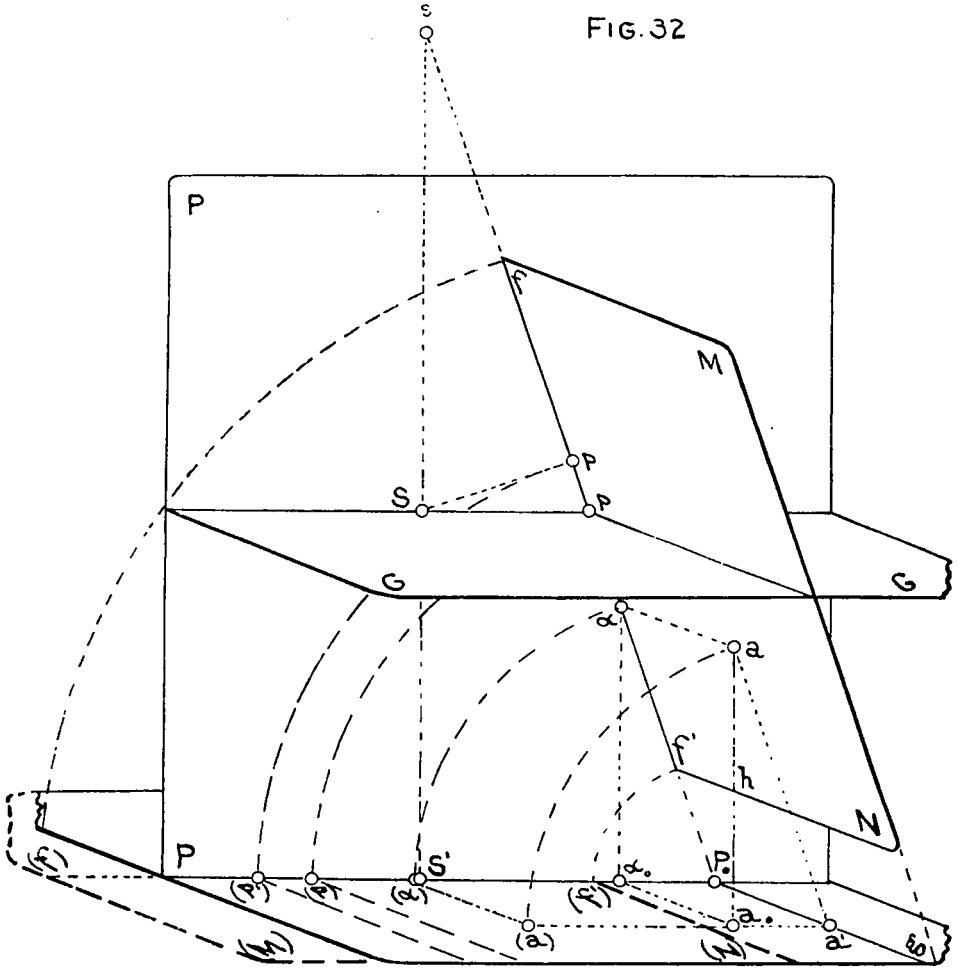

P_0 with P_0 (α) will locate the position (α) of the projected point on the principal line $(f)(f')$, revolved into the platting or ground plane.

The perpendicular to $S'P_0$ in α_0 and the vertical to the ground plane GG from a, fig. 32 intersect each other in a_0, and $S'a_0$, fig. 31, is the horizontal projection (in the ground or platting plane) of the line of direction or radial from S' to the point A.

III. DETERMINATION OF THE ALTITUDES OF POINTS PICTURED ON INCLINED PLATES

We refer again to fig. 32. It is desired to find the elevation H of the point A (pictured in a) above the ground plane GG.

Projecting a upon the principal plane PP we find α on ff'; the vertical through α intersects the horizontal projection of the principal ray $S'P_0$ in α_0, fig. 32; hence, $\alpha\alpha_0$ represents the elevation of the point A above GG, measured in the platting scale.

With reference to fig. 31, this elevation aa_0 (fig. 32) of a above the ground plane is found by projecting a upon $P'P_0$ ($= \alpha$ in fig. 32); the corresponding point on the principal line revolved about P_0 into the platting plane is (α) and its orthogonal projection upon the principal plane, the latter revolved into the platting plane about $S'P_0$, fig. 31, is (a); hence, the elevation of A above the ground plane is $= (\alpha)\ \alpha_0 = h$, to be measured in the platting scale.

If D = distance of the platted point from S', taken from the platting sheet, H = elevation of

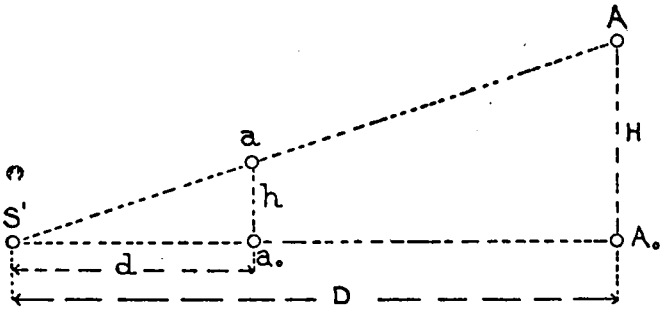

FIG. 33.

the point A above the ground plane GG, $h = (\alpha)\ \alpha_0 = aa_0$, fig. 32, $= (\alpha)\ \alpha_0$, fig. 31, $= aa_0$, fig. 33 $S'a_0 = d$ (fig. 31), taken from the platting sheet, the elevation H of the point A may be found either graphically from a diagram, fig. 33, or it may be computed from the relation:

$$H = \frac{D\,h}{d}$$

IV. APPLICATION OF PROFESSOR HAUCK'S METHOD.

The constructions just described for locating the horizontal directions to points photographed on inclined plates may be greatly simplified by applying Professor Hauck's method, by utilizing the properties of the "kernel points" of two photographs obtained from different stations but comprising the same ground.

With reference to fig. 34: S and S' = the two camera stations.

S_0 and S_0' = the foot points of S and S' respectively.
MN and $M'N'$ = inclined picture planes; both contain the image a and a' of a point A and the pictures s' and s ("kernel points") of the stations S' and S.
α_0 and α_0' = orthogonal projections (in the ground plane GG) of a and a' respectively.
A_0 = orthogonal projection of A in the ground plane.
Σ, s' and π = kernel points for picture plane MN.
Σ', s and π' = kernel points for picture plane $M'N'$.

These "kernel points" are of importance, inasmuch as—

The horizontal direction S_0A_0 (or $S_0'A_0$) intersects the ground line gg' of MN (or $M'N'$) in a_0 (or a'_0). The line connecting a and s' ("kernel point") in MN and the connection of a' and s in $M'N'$ intersect each other in the same point Ω of the line of intersection of the two picture planes, and also intersect the ground lines gg' of the picture planes in the "kernel points" π and π', respectively. All lines in MN, connecting s' with pictured points, and those in $M'N'$, connecting s with the pictures in $M'N'$ of the same points, intersect each other in points Ω of the line of intersection of the two inclined picture planes. The kernel points Σ and Σ' are the intersections of the verticals passing through the camera stations (S and S'), with the inclined picture planes. They are the "vanishing points" for the pictures of all vertical lines shown on the negatives, and whenever the pictures contain images of vertical lines the intersections of these would locate Σ and

Σ' on MN and $M'N'$, respectively. Still, when the picture plane is inclined in such a way that the principal line of the same would coincide with that of the vertically exposed plate (when the former were revolved about a line as axis passing through the second nodal point and parallel

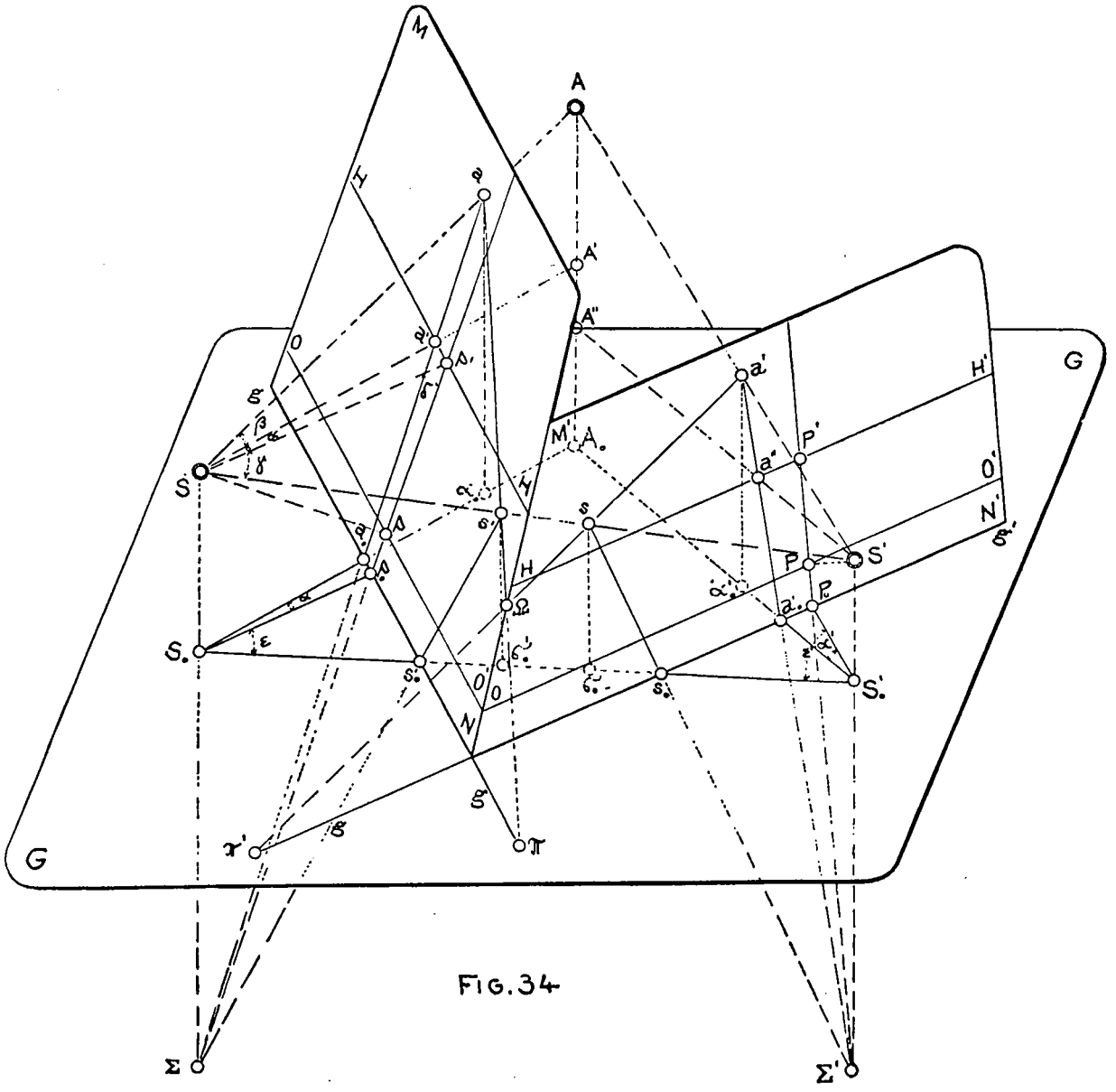

FIG. 34

with the horizon line OO' or HH', fig. 34) the kernel point Σ may more readily be located upon ff', as previously shown for s in fig. 32.

In order to locate the position of A_o, fig. 34, with reference to a on MN and a' on $M'N'$ we connect a and Σ and also a' with Σ', which lines locate a_o and a_o' upon the ground lines of the picture planes MN and $M'N'$. The intersection of the lines $S_o a_o$ and $S_o' a_o'$ will give the position of A_o in the ground plane GG.

CHAPTER III.

PHOTOTOPOGRAPHIC METHODS.

I. ANALYTICAL OR ARITHMETICAL METHODS.

(1) *Method of Prof. W. Jordan.*—In 1874 Professor Jordan made a map of the oasis "Dachel,' including the village "Gassr-Dachel," based on photographs taken with an ordinary camera by Remelé, obtained on Gerhard Rohlf's African expedition during the winter of 1873–74. Care was exercised to expose the plates in vertical plane, and horizontal directions to at least three points for each photograph were instrumentally measured to obtain the data needed for the proper orientation of the pictures. Vertical angles to at least two such points (for every picture) were also observed to give the means for locating the horizon lines of the pictures and thus enabling the draftsman to deduce the elevations of other points pictured on the photographs.

With reference to fig. 35 we have: OO' = horizon line, ff' = principal line, P = principal point, SP = focal length = f, variable for different pictures.

The ordinates aa', bb', and $cc' = y_1$, y_2, and y_3, respectively.

The abscissæ of the three points a, b, and c be x_1, x_2, and x_3 respectively.

The horizontal angles included between the principal ray and the horizontal directions Sa', Sb', and $Sc' = \alpha_1$, α_2, and α_3 respectively.

The azimuthal angles (between the meridian SN and the horizontal directions Sa', Sb', and Sc') = φ_1, φ_2, and φ_3

Then $\alpha_2 - \alpha_1 = \varphi_2 - \varphi_1 = \varepsilon_1$ and $\alpha_3 - \alpha_2 = \varphi_3 - \varphi_2 = \varepsilon_2$

The elevations of the points A, B, and C above the plane of reference or above the ground plane = H_1, H_2, and H_3

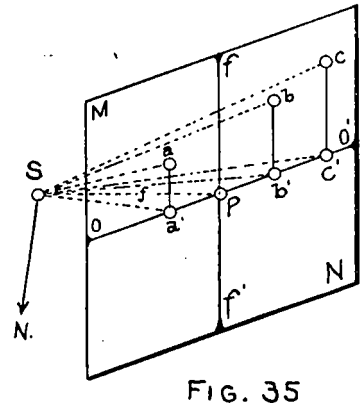

FIG. 35

As the photographic plate MN had been exposed in vertical plane, it will be evident that for the three points a, b, and c pictured on the perspective MN, fig. 35—

$$x_1 = f \tan \alpha \qquad x_2 = f \tan \alpha_2 \qquad x_3 = f \tan \alpha_3$$

or,

$$x_2 - x_1 = f(\tan \alpha_2 - \tan \alpha_1) = f \frac{\sin(\alpha_2 - \alpha_1)}{\cos \alpha_1 \cos \alpha_2}$$

and

$$x_3 - x_2 = f(\tan \alpha_3 - \tan \alpha_2) = f \frac{\sin(\alpha_3 - \alpha_2)}{\cos \alpha_3 \cos \alpha_2}$$

The values $x_2 - x_1$ and $x_3 - x_2$ may be scaled off directly on the photograph, and the values for $\alpha_2 - \alpha_1$ and $\alpha_3 - \alpha_2$ may be taken from the field records of the observed angles.

Hence $\frac{\cos \alpha_3}{\cos \alpha_1}$ may be computed from the equation

$$\frac{x_2 - x_1}{x_3 - x_2} = \frac{\cos \alpha_3}{\cos \alpha_1} \frac{\sin(\alpha_2 - \alpha_1)}{\sin(\alpha_3 - \alpha_2)}$$

If we substitute $\tan \gamma$ for $\frac{\cos \alpha_3}{\cos \alpha_1}$

and as

$$\frac{1 + \tan \gamma}{1 - \tan \gamma} = \tan(45^\circ + \gamma)$$

we may now write

$$\tan (45^\circ + \gamma) = \frac{1 + \frac{\cos \alpha_3}{\cos \alpha_1}}{1 - \frac{\cos \alpha_3}{\cos \alpha_1}} = \frac{\cos \alpha_1 + \cos \alpha_3}{\cos \alpha_1 - \cos \alpha_3}$$

$$= \frac{\cos \frac{\alpha_1 + \alpha_3}{2} \cos \frac{\alpha_1 - \alpha_3}{2}}{\sin \frac{\alpha_1 + \alpha_3}{2} \sin \frac{\alpha_1 - \alpha_3}{2}} = \cot \frac{\alpha_1 + \alpha_3}{2} \cot \frac{\alpha_1 - \alpha_3}{2}$$

and $\tan \frac{\alpha_1 + \alpha_3}{2} = \cot (45^\circ + \gamma) \cot \frac{\alpha_1 - \alpha_3}{2}$

From this equation we compute $\alpha_1 + \alpha_3$, and after subtracting

$$\alpha_3 - \alpha_2 = \varphi_3 - \varphi_2 = \varepsilon_2$$

from

$$\alpha_2 - \alpha_1 = \varphi_2 - \varphi_1 = \varepsilon_1$$

we find

$$\alpha_1 - \alpha_3 = \varphi_1 - \varphi_3$$

knowing $\alpha_1 + \alpha_3$ and $\alpha_1 - \alpha_3$ we can readily find α_1 and α_3, also,

$$\alpha_2 = \alpha_1 + \varepsilon_1 \text{ or}$$

$$= \alpha_3 - \varepsilon_2$$

We had found:

$$x_2 - x_1 = f \frac{\sin (\alpha_2 - \alpha_1)}{\cos \alpha_1 \cos \alpha_2} = f \frac{\sin \varepsilon_1}{\cos \alpha_1 \cos \alpha_2}; \text{ hence } f = \frac{(x_2 - x_1) \cos \alpha_1 \cos \alpha_2}{\sin \varepsilon_1}$$

$$x_3 - x_2 = f \frac{\sin (\alpha_3 - \alpha_2)}{\cos \alpha_3 \cos \alpha_2} = f \frac{\sin \varepsilon_2}{\cos \alpha_3 \cos \alpha_2}; \text{ whence } f = \frac{(x_3 - x_2) \cos \alpha_3 \cos \alpha_2}{\sin \varepsilon_2}$$

Thus the abscissæ x_1, x_2, and x_3, (the principal line ff') and the focal length f may be found.

With the aid of the observed vertical angles β the horizon line OO' may be located on the photograph. For example, if the vertical angle $\beta_3 = c\ S\ c'$ had been observed to the point C, we find:

$$y_3 = Sc' \tan \beta_3$$

$$= \frac{f}{\cos \alpha_3} \tan \beta_3$$

The horizon line OO' will fall below the pictured point c by the vertical distance $\frac{f}{\cos \alpha_3} \tan \beta_3$, and for the point a the vertical distance to the horizon line would be

$$y_1 = \frac{f}{\cos \alpha_1} \tan \beta_1$$

At least two vertical angles having been observed for each plate, the horizon line OO' may thus be located and marked upon the negative, when the principal point P may also be marked on OO' by means of the abscissæ x_1, x_2, and $x_3 = a'P, b'P$, and Pc', respectively.

(2) *Method of Dr. G. Le Bon.*—Dr. Le Bon, who used his instrument chiefly for the draughting of ancient buildings and monuments in India, provided the ground-glass plate of his camera with a net of squares, each square having sides 1 centimeter long, the latter being drawn parallel with the horizon—and principal lines, which latter two were subdivided into millimeters.

This arrangement enabled the operator to obtain the measurements of objects directly by inspection of the image on the (graduated) ground-glass plate. To determine the dimensions of

the front of a building, a certain distance is measured directly upon the same and a picture is then taken by exposing a photographic plate in vertical plane and parallel to the base of the front of the building.

For example:

(*a*) To find the distance D of an object of unknown height H.

Two stations, S and S', are occupied on a base line (which is measured directly in the field) laid off in a direction at right angles to the base of the object, fig. 36.

FIG. 36

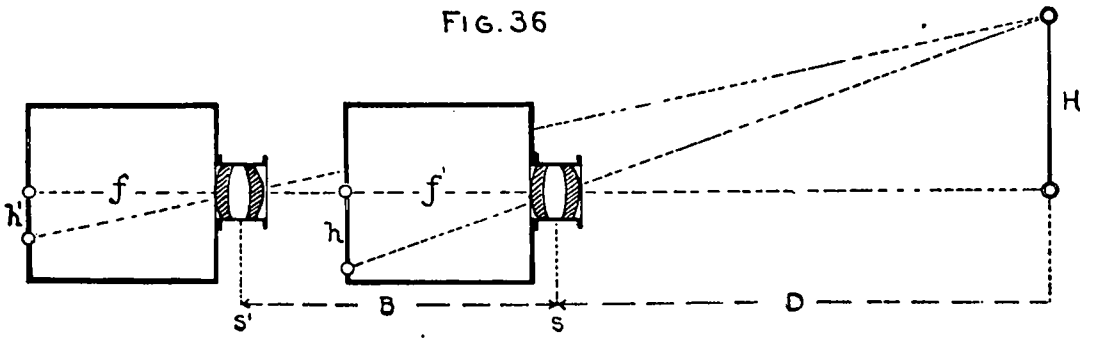

If the height of the image, measured on the graduated ground glass, at the first station S is h and the focal length for both exposures be the same $=f$, then

$$D : H = f : h$$

and for the second station S'

$$D + B : H = f : h'$$

By dividing the second equation by the first, we find:

$$\frac{D+B}{D} = \frac{h}{h'} \; ; \; \frac{B}{D} = \frac{h}{h'} - 1 = \frac{h - h'}{h'}$$

whence:

$$D = \frac{B.h'}{h - h'}$$

B is given and h and h' are measured directly on the ground glass.

(*b*) It is desired to find the height H of an object of which the fractional length H' had been measured directly, fig. 37.

FIG. 37.

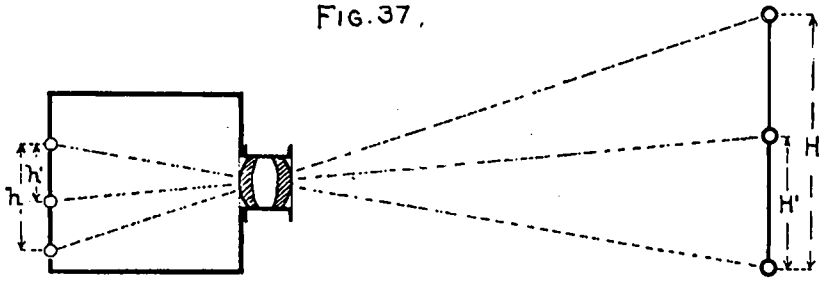

On the image of the object on the graduated ground-glass plate the heights h and h' may be read off directly, and H' being known we find H from the equation

$$H = H' \frac{h}{h'}$$

(3) *Method of L. P. Paganini (Italian method).*—This method was developed for the topographic survey of Italy, made under the auspices of the Royal Italian Military Geographical Institute, and a detailed description of the same, with numerical examples, has been published in Appendix

No. 3, Report for 1893 of the Superintendent of the United States Coast and Geodetic Survey. Also, Dr. C. Koppe and Prof. F. Steiner give preference to the arithmetical method for photogrammetric surveys in general.

GENERAL ARITHMETIC DETERMINATION OF THE ELEMENTS OF THE ITALIAN PHOTOGRAPHIC PERSPECTIVES.

The panoramic views which subserved the map making were obtained by ten successive exposures. After each exposure the camera was moved in azimuth by a horizontal angle of 36°, and as each plate subtends a horizontal angle of 42°, the two ends of adjoining plates have a common margin of a width of 3° in arc, corresponding to a width of 15 millimetres. These common margins of two adjoining plates serve principally to ascertain whether the adjustments of the phototheodolite have been changed during the occupancy of a station.

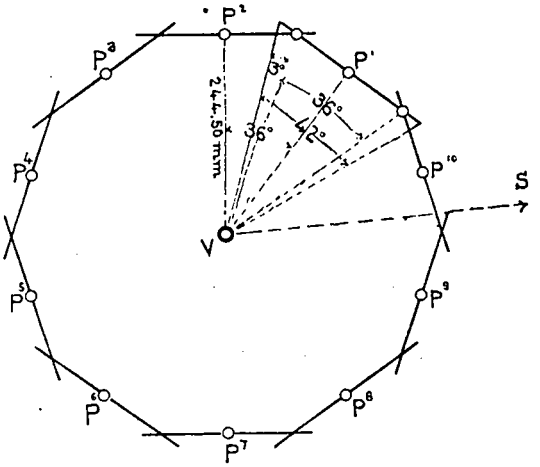

FIG. 38

(*a*) *Orientation of the picture trace.*—The horizontal projection of one complete panorama composed of ten plates will be a regular decagon, fig. 38, with a radius of the inscribed circle equal to the principal focal length (constant) of the camera.

P', P^2, ... P^{10} = (horizontal) picture traces,
V = panorama station,
$VP' = VP^2 =$ . . . . $VP^{10} = f$ = principal focal length of camera.

After the position of one panoramic view has been platted on the map, its picture trace will be oriented, and with it the remaining nine views of the panorama.

After the horizontal angle ω, fig. 39, included between the principal ray VP' of view P' and the horizontal direction to the triangulation point S, fig. 39, has been platted the orientation of each succeeding view P^2, P^3 . . . . . P^{10} is accomplished by adding successively 36°, 72°, 108° . . . . . ($36° - \omega°$) to the angle ω.

(*b*) *Platting the lines of direction to pictured points of the terrene.*—The orientation of the panorama having been made, the lines of direction to points photographed on the panorama plates may readily be platted.

The plate MN, fig. 39, may represent a vertical photographic plate oriented with reference to the known point S, pictured on MN as s.

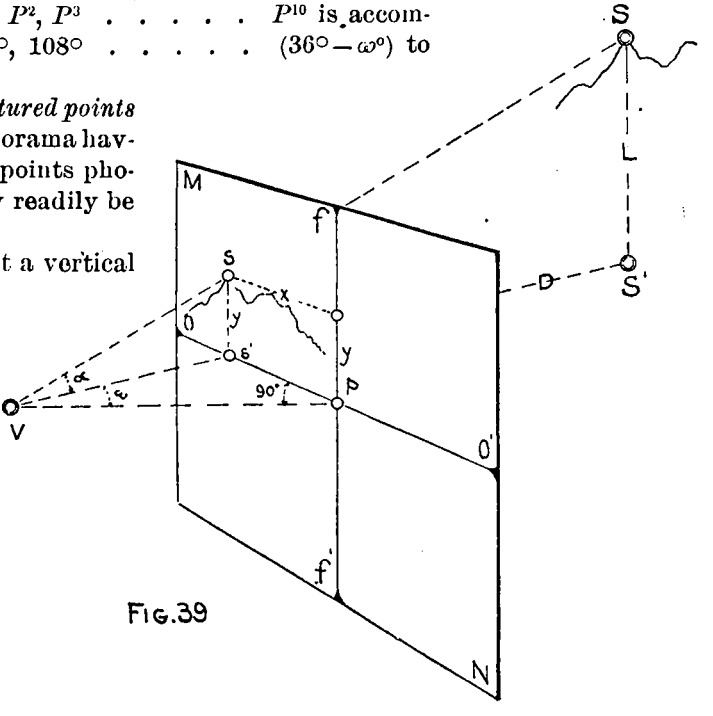

FIG. 39

OO^1 = horizon line,
V = point of view of the perspective MN,
ω = angle of orientation for this plate with reference to S,
$VP = f$ = (principal) focal length,
ss^1, perpendicular to $OO' = y$ = ordinate of the image s,
sx perpendicular to $ff' = x$ = abscissa of the point s.

From the rectangular triangle $VP's'$, fig. 39, we find:

$$x = f \tan \omega.$$

If the camera station V and the known point A have been platted and the picture trace OO', fig. 40, has been oriented, the horizontal projection of the ray from V to S may be found as follows:

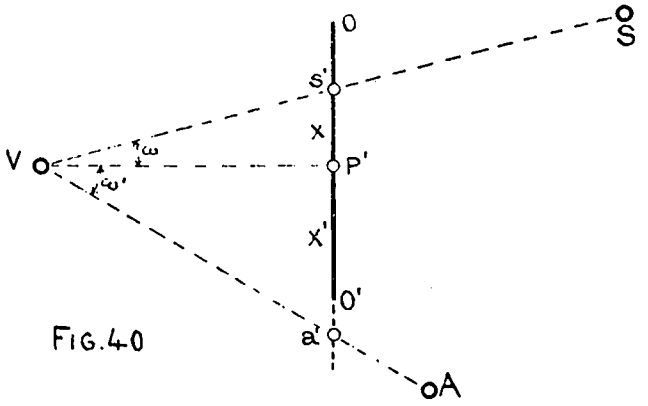

FIG. 40

The abscissa $P's' = x$, fig. 39, is laid off on OO', fig. 40, from P' in the sense of the direction to S (whether S is to the right or to the left of the principal line ff', fig. 39) with reference to the principal point P', locating s' (the orthogonal projection of the pictured point in the ground plane) and a line drawn from V through $s' = Vs'$, which will be the ray VS, fig. 39, projected in the platting plane.

The position of S on the platting sheet is obtained by finding the point of intersection of two or more lines of direction, obtained in a similar manner, from other pictures containing images of S and taken from different stations, as all rays to the same object, seen from different stations, must intersect each other in the same point on the platting sheet.

The elevations of pictured terrene points are readily determined after the selected points (identified on several pictures) have been determined and platted in horizontal plane, in the manner just described.

If the elevation of the station V is known, the elevation of the line of horizon OO' on the plate, fig. 39, may easily be obtained by adding the height of instrument to the elevation of V.

(*c*) *Determination of the elevations of pictured points.*—Disregarding the effects of curvature and refraction, the elevations of all the points on the plate which are bisected by the horizon line OO' have the same elevation as the optical axis of the instrument at V.

The elevations of pictured points, above or below the horizon line, are obtained by determining their elevation above or their depressions below the line OO'.

If D = horizontal distance from station V to a point S, fig. 39,
= VS', fig. 39, to be measured in the platting scale.
L = difference in elevation between point S and station V.
= SS' (S' being the orthogonal projection of S upon the platting plan).
d = horizontal distance of the picture s of S from V.

We find from the similar triangles $Vs's$ and VSS':

$$L : D = y : d \qquad 1$$

$$L = \frac{Dy}{d}. \qquad 2$$

From the rectangular triangle $VP's'$ follows:

$$d = \frac{f}{\cos \omega} = f \sec \omega, \qquad 2a$$

whence

$$L = \frac{Dy}{f \sec \omega}. \qquad 3$$

Should the point S be bisected by the vertical thread (principal plane) then

$$\omega = O \text{ and } \sec \omega = 1, \text{ or,}$$

$$L = \frac{Dy}{f}. \qquad 3a$$

This formula would answer for all points of the perspective if the image plate were a cylindrical surface of radius $= f$ (instead of being a tangential plane to such cylinder), if the decagon were a circle (as it is the case for the sensitive film of the panoramic cameras, and Colonel Moessard's cylindrograph, which will be described later).

Differences of elevation, taken from the perspectives, are positive or negative according to the relative positions of the pictured points with reference to the horizon line OO', fig. 39, whether above OO' or below the same, and the apparent elevations of such points (above mean sea level) are obtained by adding their ordinates (L, fig. 39) to or subtracting them from the elevation of the camera station (V, fig. 39).

By comparing the elevations thus obtained for identical points from photographs exposed from different stations the hypsometric determinations of secondary points of the terrene may be checked.

(*d*) *Checking the position of the horizon line of a photograph.*—To check the position of the horizon line OO', fig. 39, photographs are selected which show the images of two or more triangulation points, the elevations of the latter, determined from the photographs, are compared with those given in the triangulation records and discrepancies are adjusted by shifting the line OO'. Should the elevations of the triangulation points be unknown, or should the pictures from any station not contain the pictures of such points, this check may still be made by measuring the vertical angles (α, fig. 39, with the vertical circle of the phototheodolite from such camera station) to a series of prominent points (S, fig. 39) and comparing their computed ordinates (L, fig. 39) with those obtained from the pictures.

We find from the similar triangles VSS' and Vss', fig. 39:

$$\tan SVS' = \tan \alpha = \frac{L}{D} = \frac{y}{d}$$

and we had according to formula 2*a*:

$$d = \frac{f}{\cos \omega}$$

hence

$$\tan \alpha = \frac{y}{f} \cos \omega, \text{ or} \qquad 4$$

$$y = \frac{f . \tan \alpha}{\cos \omega} \qquad 5$$

where ω is the horizontal angle included between the vertical plane (VSS') passing through the camera station V and the point S, fig. 39, and the principal plane (Vff'). This angle ω should be measured (with the horizontal circle of the phototheodolite) for several points S at every station, whence a limited or insufficient number of triangulation points may be seen.

If the computed values for y, formula 5, are not in accord with those obtained by direct measurement on the photograph, the horizon line OO', fig. 39, must be adjusted until the values for the ordinates measured on the picture are the same as those computed by aid of formula 5.

The necessity of the precise determination of the value f (focal length) is evident from the preceding, and if the panorama pictures contain a sufficient number of well-defined pictures of surrounding triangulation points, the determination of f may readily be made by means of the adjusted horizon line OO', fig. 39.

(*e*) *Determination of the focal length f.*—The phototheodolite is set up over a well-determined point and adjusted. A plate is exposed in vertical plane in such a way that the vertical thread *ff'* bisects a known geodetic point *S*, fig. 41, which can readily be identified upon the ground-glass plate of the camera. (It is also desirable that the ordinate *y*, fig. 41, be sufficiently long to assure a correct measurement of its length to be made on the picture.) There will be given, fig. 41:

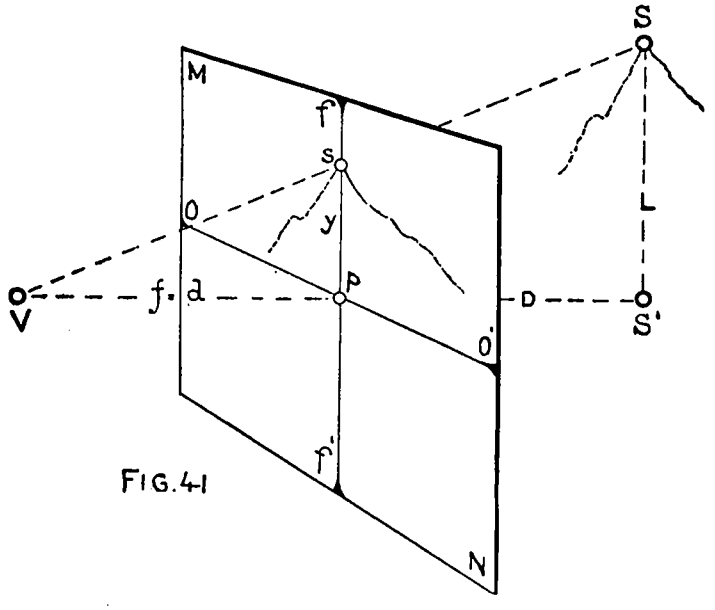

FIG. 41

L = difference of elevation of bisected point *S* and panorama station *V*, *D* = horizontal distance between *S* and *V*, *y* = ordinate of pictured point *s*.

From equation 3*a* we find

$$f = \frac{D.y}{L}$$

which will be a fairly accurate value if the horizontal position of the camera was assured and if the ordinate *y* was correctly measured on the negative.

Another value for *f* may be found from equation 5:

$$f = \frac{y.\cos\omega}{\tan\alpha}$$

if the picture contained triangulation points enough to adjust the horizon line by computing their ordinates:

$$y = \frac{L.d}{D}$$

By using the mean of these determinations for *f* the computations (based upon the new values for *x* and *y*) may be repeated until perfect agreement is reached.

(*f*) *Determination of the principal point of the perspective.*—The great number of triangulation points established in Italy, with special reference to the phototopographic survey, facilitates the application of the photogrammetric method and assures the accurate determination of the perspective elements. Although the Italian pictures command a horizontal angle of but 42°, the greater number of them contain the pictures of several triangulation points, and it can be ascertained simultaneously with the determination of the value of *f* whether the picture *P*, of the

intersection of the cross wires (OO' and ff') coincides with the principal point of view, P, upon the perspective, fig. 42.

s and s' = pictures of two triangulation points S and S' on the photograph MN, V = station point or point of view; ss and $s's' = y$ and y' respectively = verticals upon the horizon line OO' through the picture points s and s', = ordinates of the triangulation points; SS_1 and $S'S_1' = L$ and L' respectively, = differences in elevation between the triangulation points and camera station; D and D' = horizontal distances from V to S and S' respectively; x and x' = abscissæ of pictured

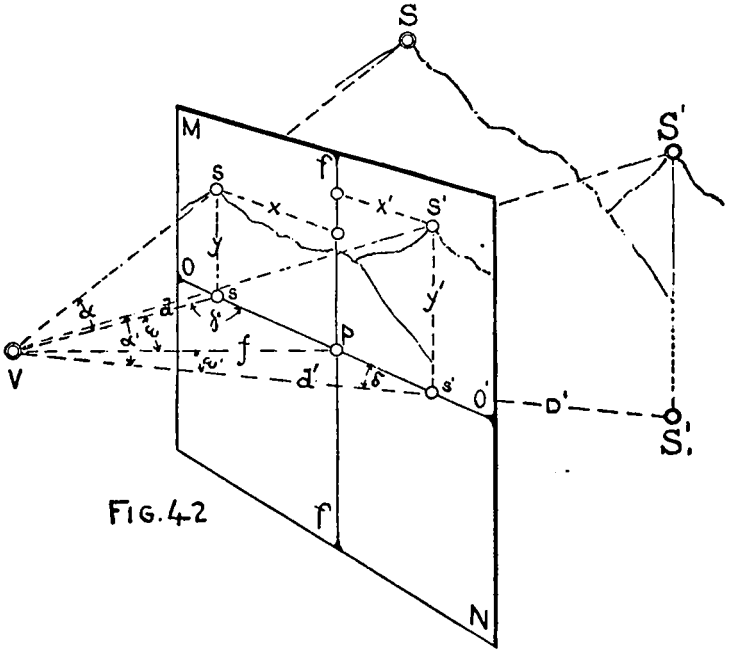

FIG. 42

points s and s'; d and d' = horizontal distances of the pictured triangulation points from the point of view V.

It is desired to find VP and the position of P with reference to s and s', or the abscissæ x and x'.

L, L', D, D', y, and y' are known, or they may be found by direct measurements on the chart projection and upon the photograph. Hence:

$$d = \frac{D.y}{L}$$

$$d' = \frac{D^1.y^1}{L'}$$

The horizontal angle sVs' ($= \omega + \omega'$) being observed in the field the other two angles, γ and δ, of the horizontal triangle sVs', may be computed as follows:

$$\tan \frac{\gamma - \delta}{2} = \frac{d' - d}{d + d'} \cot \frac{sVs'}{2}$$

By substituting H for $\frac{\gamma - \delta}{2}$ and M for $\frac{\gamma + \delta}{2} = 90^\circ - \frac{sVs'}{2}$

we will find

$$\gamma = M + N$$
$$\delta = M - N$$

From the two triangles sVP and PVs' (both are rectangular at P) we find

$$f = d.\ \sin\gamma = d'\ \sin\delta$$
$$x = f.\ \cot\gamma$$
$$x' = f.\ \cot\delta$$

also, as a check, the angles of orientation:

$$\omega = 90^\circ - \gamma$$
$$\omega' = 90^\circ - \delta$$

To check the abscissæ the length ss' is carefully measured upon the negative, which length should equal the computed value of

$$x + x' \text{ and also } = \frac{(d + d')\ \sin\frac{sVs'}{2}}{\cos\frac{\delta - \gamma}{2}}$$

Should the horizontal angle sVs' not have been measured in the field for some reason, then the angles γ and δ may be found by computation, after carefully measuring ss' on the negative and using the formulas

$$\tan\frac{\delta}{2} = \sqrt{\frac{(p - d')\ (p - ss')}{p\ (p - d)}} \text{ and}$$

$$\tan\frac{\gamma}{2} = \sqrt{\frac{(p - d)\ (p - ss')}{p\ (p - d')}}$$

where:

$$p = \frac{d + d' + ss'}{2}$$

the angles of elevation α and α', which are obtained either by direct measurement in the field or computed from the formulas

$$\tan\alpha = \frac{L}{D}$$

$$\tan\alpha' = \frac{L'}{D'}$$

serve to obtain checks on the values, measured on the negatives, for y and y' by using the formulas

$$y = \frac{f}{\cos\omega}\ \tan\alpha \text{ and}$$

$$y' = \frac{f}{\cos\omega'}\ \tan\alpha'$$

the value for f in above formulas being the same as found from the equation

$$f = d.\ \sin\gamma = d'.\ \sin\delta$$

By repeating the computation with these values for y and y' (if any discrepancy is noted between these new and the former values for y and y') the true value for f may be obtained very closely.

For all practical purposes, however, it suffices to take several pictures with a constant focal length, and to take the mean value of the different f determined from those pictures.

(*g*) *Franz Hafferl's method for finding the focal length of a photograph from the abscissæ of two pictured triangulation points.*—When the horizontal distances D and D' are great, compared with the differences in elevation (L and L') between the points in question (S and S') and the camera station V, fig. 42, the ordinates y and y' will be short, their lengths will be difficult to be measured, and it may be better in that case to determine the value for f by means of the abscissæ of the pictured points, fig. 43.

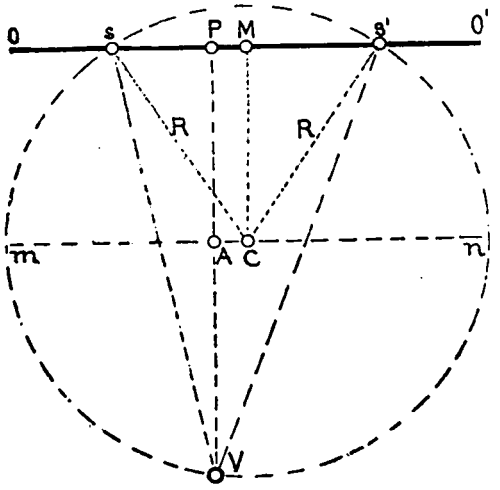

FIG. 43

OO' = platted (and oriented) picture trace, Vs and Vs' = platted horizontal directions from the camera station V to the triangulation points S and S' (pictured as s and s'), VP = perpendicular to the picture trace through V.

It is desired to find f.

Describe a circle through the three points V, s and s', the center of which may be at C.

The angle $sCs' = 2\,(sVs')$. The perpendicular through C to ss' ($= CM$) will bisect this line and the center angle sCs' into two equal parts; hence, sCM and $s'CM$ each $= sVs'$, and if the radius of the circle passing through s, s' and $V = R$ we will have the following relation (from the triangle sMC):

$$sC = R = \frac{sM}{\sin sCM} = \frac{x + x'}{2} \cdot \frac{1}{\sin sCM};\quad sM = \frac{x + x'}{2}$$

Having drawn the diameter mn parallel with OO', we will have

$$f = VP = VA + AP$$

VA being vertical to mn it will be the middle proportional to mA and An:

$$mA : AV = AV : An \text{ or}$$

$$mA \cdot An = AV^2$$

We can now replace mA by $(mC - AC) = R - \frac{x' - x}{2}$

and as

$$An = nC + AC = R + \frac{x' - x}{2}$$

we find:

$$AV = \sqrt{\left(R - \frac{x' - x}{2}\right)\left(R + \frac{x' - x}{2}\right)}$$

and finally:

$$AP = CM = SM \cot MCs$$

$$= \frac{x' + x}{2} \cot sCM$$

(4) *General arithmetical method for finding the platted positions of points pictured on photographic perspectives (exposed in vertical plane).*—If we refer the pictured points to the principal point P by

means of the rectangular system of coordinates formed by the principal line ff' and the horizon line OO' we will have with reference to fig. 44:

S and S' = two camera stations; MN and $M'N'$ = two picture planes exposed in vertical plane, one from station S, the other from station S'; aa' $(=y)$ and $a'P$ $(=x)$ = coordinates of pictured point a on MN; $a'a'_1$ $(=y')$ and a'_1P' $(=x')$ = coordinates of a' pictured on $M'N'$; f = focal length (the same for both pictures MN and $M'N'$); $D = S_oA_o$ = horizontal distance of A from station S; $D' = S'_oA_o$ = horizontal distance of A from station S'; $d = Sa' = S_oa_o$ = horizontal distance of pictured point a from point of view S; $d' = S'a_1' = S_o'a_o'$ = horizontal distance of pictured point a' from point of view S'; H = elevation of A above horizon plane of station S. H' = elevation of A above horizon plane of station S'; $B = S_oS_o'$ = horizontal distance between the stations S and S'; α and α' = horizontal angles included between B and the principal planes passing through S and S', respectively.

If the camera (theodolite) was in perfect adjustment, if the base line B is known, and if the

FIG. 44.

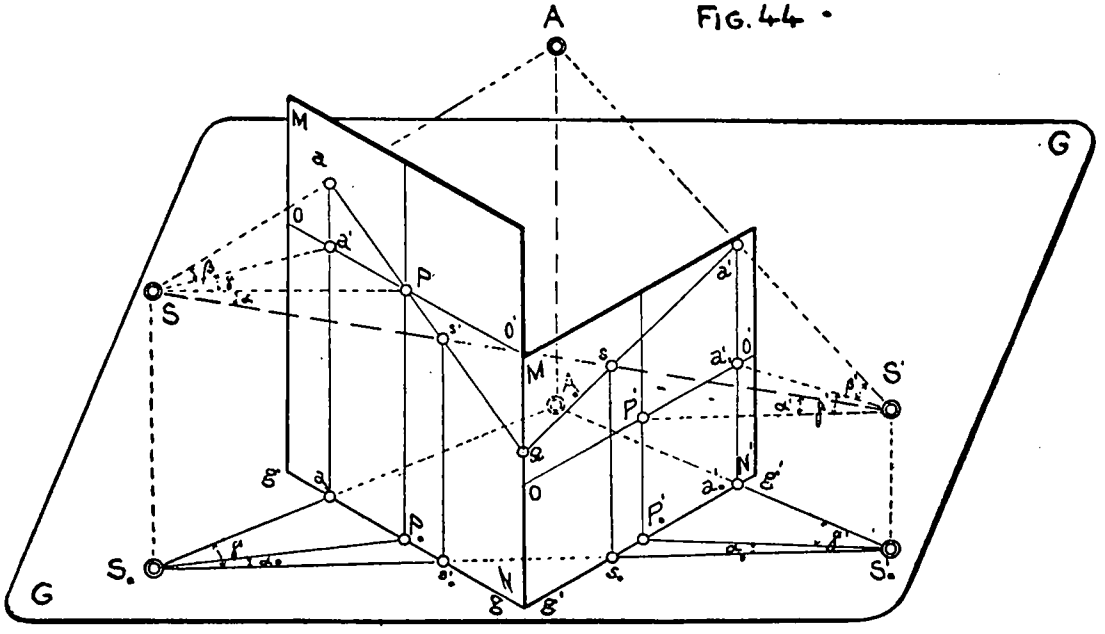

angles α and α' had been observed, we will know the values of B, α, α', f, and the coordinates x, y, x', and y', the latter being obtained by direct measurement on the negatives.

We can now compute—

(1) The horizontal angle γ, included between the principal plane and any horizontal direction, Sa', fig. 44, from the equation:

$$\tan \gamma = \frac{x}{f} \text{ or } \tan \gamma' = \frac{x'}{f}$$

(2) The angle of elevation β of the line of direction Sa to any point, A, pictured as a on the photograph MN, from the equation:

$$\tan \beta = \frac{y}{d} \text{ or } \tan \beta' = \frac{y'}{d'}$$

As

$$d = \sqrt{f^2 + x^2} \text{ or } d' = \sqrt{f^2 + (x')^2}$$

we may also write:

$$\tan \beta = \frac{y}{\sqrt{f^2 + x^2}}$$

or

$$\tan \beta' = \frac{y'}{\sqrt{f^2 + (x')^2}}$$

We know the length S_0S_0' $(= B)$ of the triangle $S_0A_0S_0'$, and the angles γ, α, γ' and α' also being given, we have

$$D : B = \sin(\gamma' + \alpha') : \sin[180^\circ - (\gamma + \alpha + \gamma' + \alpha')]$$
$$= \frac{\sin(\gamma' + \alpha')}{\sin(\gamma + \alpha + \gamma' + \alpha')}$$

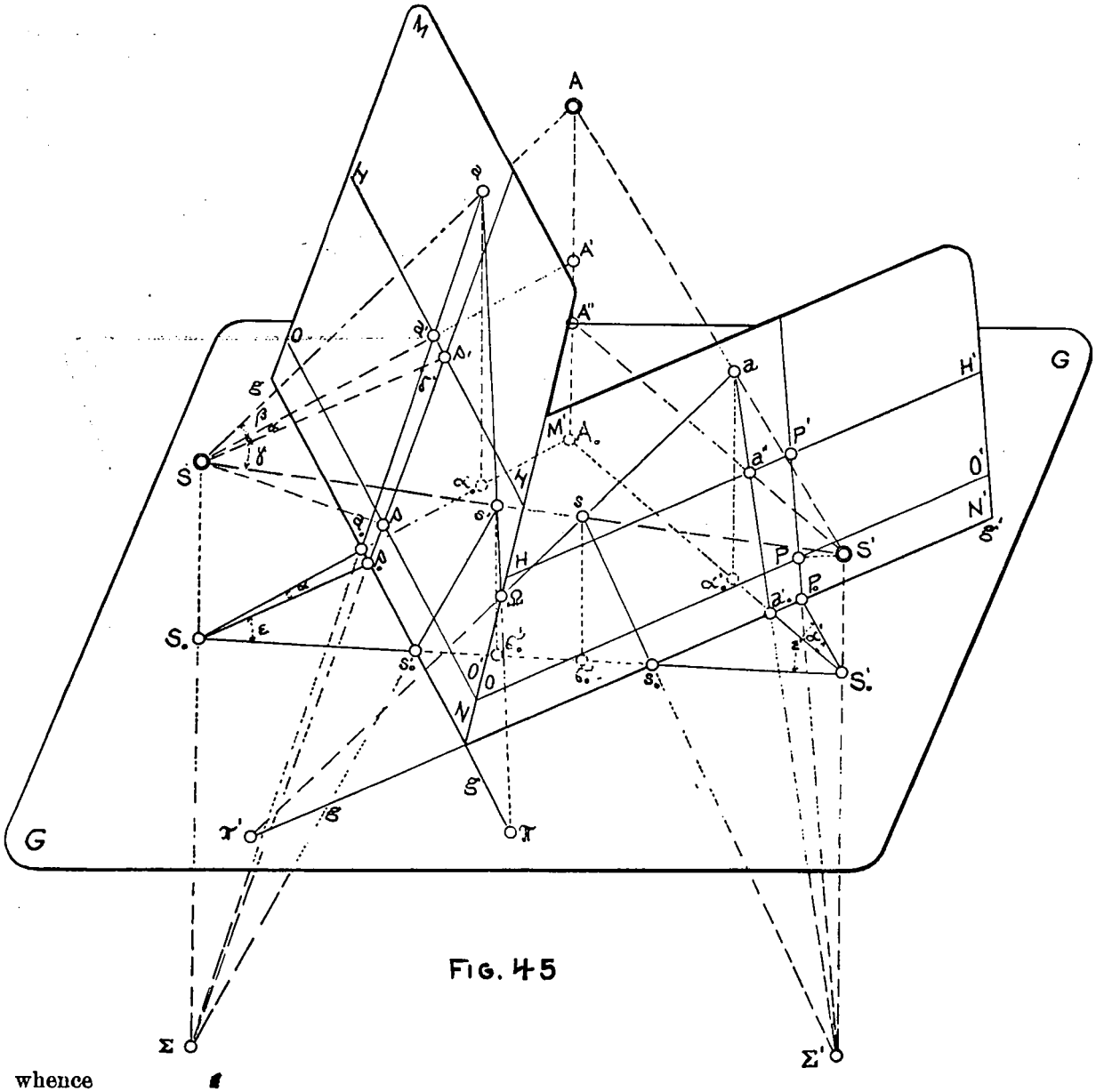

FIG. 45

whence

$$S_0A_0 = D = \frac{B \sin(\gamma' + \alpha')}{\sin(\gamma + \alpha + \gamma' + \alpha')}$$

or

$$S_0'A_0 = D' = \frac{B \sin(\gamma + \alpha)}{\sin(\gamma + \alpha + \gamma' + \alpha')}$$

The difference in elevation, H, between the point A and camera station S may be found from

$$\frac{H}{D} = \tan \beta$$

whence

$$H = D \tan \beta$$

or

$$H' = D' \tan \beta.$$

(5) *General arithmetical method for finding the platted positions of points pictured on photographic perspectives for inclined picture planes.*—For inclined picture planes we will have to take into consideration the angle of inclination of the plate—the angle which is included between the optical axis of the inclined camera and the horizon plane of the camera station.

We have, with reference to figs. 45 and 46:

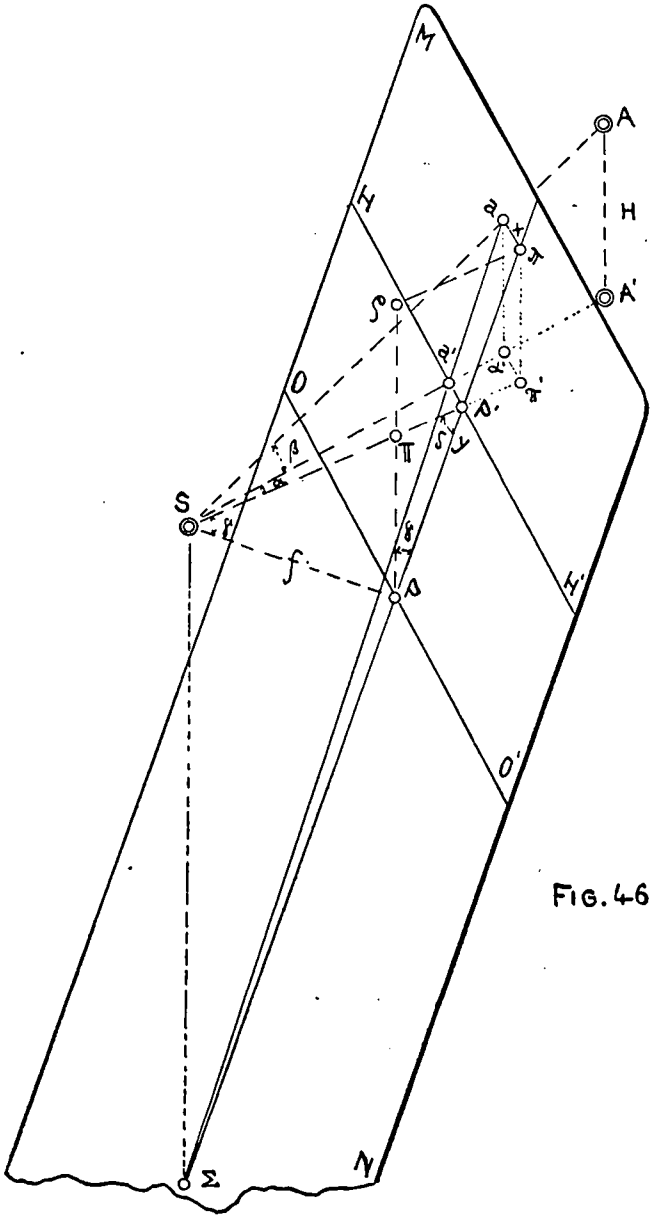

FIG. 46

α = horizontal angle between the principal plane of station S and the vertical plane passing through station S and the point A, pictured as a on inclined picture MN; β = angle of elevation of the point A observed from S; γ = angle of inclination of the photographic plate MN; $\delta = 180° - \gamma$; OO' = horizon line on MN when vertical, permanently marked on the camera; P = principal point for the vertical plate, also permanently marked as the intersection of the principal

and horizon lines when the plate is vertical; $P\pi = y =$ ordinate of a on MN (fig. 46); $a\pi = x =$ abscissa of a on MN, very nearly $= a'P'$; $\Sigma =$ vanishing point ("kernel point") for all vertical lines pictured on MN.

From inspection of fig. 46 it will follow directly:

$$\tan\beta = \frac{a\alpha'}{S\alpha'} = \frac{\pi\pi'}{S\alpha'} = \frac{S\Pi}{S\alpha'}$$
$$= \frac{P\rho - P\Pi}{\sqrt{x^2 + (S\pi')^2}} = \frac{y\cos\gamma - f\sin\gamma}{\sqrt{x^2 + (S\Pi + \Pi\pi')^2}}$$
$$= \frac{y\cos\gamma - f\sin\gamma}{\sqrt{x^2 + (S\Pi + \rho\pi)^2}}$$
$$= \frac{y\cos\gamma - f\sin\gamma}{\sqrt{x^2 + (f\cos\gamma + y\sin\gamma)^2}}$$

and

$$\tan\alpha = \frac{\alpha'\pi'}{S\pi'} = \frac{x}{S\Pi + \rho\pi} = \frac{x}{f\cos\gamma + y\sin\gamma}$$

(We had found for the vertically exposed plate

$$\tan\beta = \frac{y}{\sqrt{x^2 + f^2}} \text{ and}$$
$$\tan\alpha = \frac{x}{f}$$

The preceding formulas for tan α and tan β will assume the form of the latter if the angle of inclination γ is reduced to zero, as $\sin\gamma = \sin 0 = 0$ and $\cos\gamma = \cos 0 = 1$.)

After having thus found α and β (also α' and β') we can now compute the value for $D = S_0A_0$ and for $H = AA'$

With reference to fig. 45 we have

$$\frac{D}{B} = \frac{\sin(\varepsilon' - \alpha')}{\sin[180^\circ - (\alpha + \varepsilon + \varepsilon' - \alpha')]}$$

hence

$$D = \frac{B\sin(\varepsilon' - \alpha')}{\sin(\alpha + \varepsilon + \varepsilon' - \alpha')}$$

and from

$$\tan\beta = \frac{H}{D}$$

we find

$$H = D\tan\beta$$
$$= \frac{D(y\cos\gamma - f\sin\gamma)}{\sqrt{x^2 + (f\cos\gamma + y\sin\gamma)^2}}$$

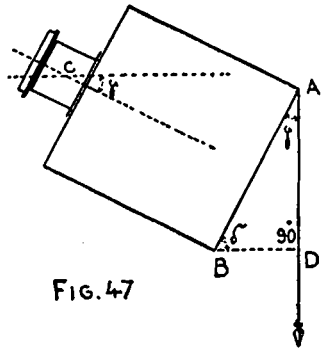

FIG. 47

If an ordinary surveying camera, with a constant focal length, is used, and when it should become desirable to expose a photographic plate in an inclined plane, the complement δ of the angle of inclination of the optical axis ($= \gamma$) may be determined more readily (but only approximately) than the latter by carefully measuring the distances AD, fig. 47 (in the direction of the line of a suspended plumb bob), and DB, supposing AB to be parallel with the photographic plate.

(6) *General analytical determination of the elements of a photographic perspective.*—If, in addition to the photographs, data obtained by instrumental observations are given for a graphical determination of the focal lengths of the pictures, their horizon lines and principal points, then these elements may also be determined by computation.

A picture, MN, may contain the images a, b, and c of three known points, A, B, and C, the

position of the camera station (whence this picture was obtained) being likewise known with reference to the three platted points A', B', and C', fig. 48.

To orient the picture trace (or ground line) gg' with reference to the platted station S', and the platted points A', B', and C', the latter are preferably referred to a system of coordinates having the platted station S' as origin.

In fig. 48, for example, a rectangular system of coordinates, $S'Y$ and $S'X$, has been adopted, with the origin in S', and axis of abscissa passing through one of the three triangulation points.

The coordinates of the three triangulation points A', B', and C', platted on the chart projection, are found by measurement $= X_1Y_1$, X_2Y_2, and X_3, respectively.

The coordinates of the orthogonal projections (on the picture trace gg') of the corresponding points, pictured on the photograph MN, may be designated by x_1y_1, $x_{II}y_{II}$, and x_{III}, respectively.

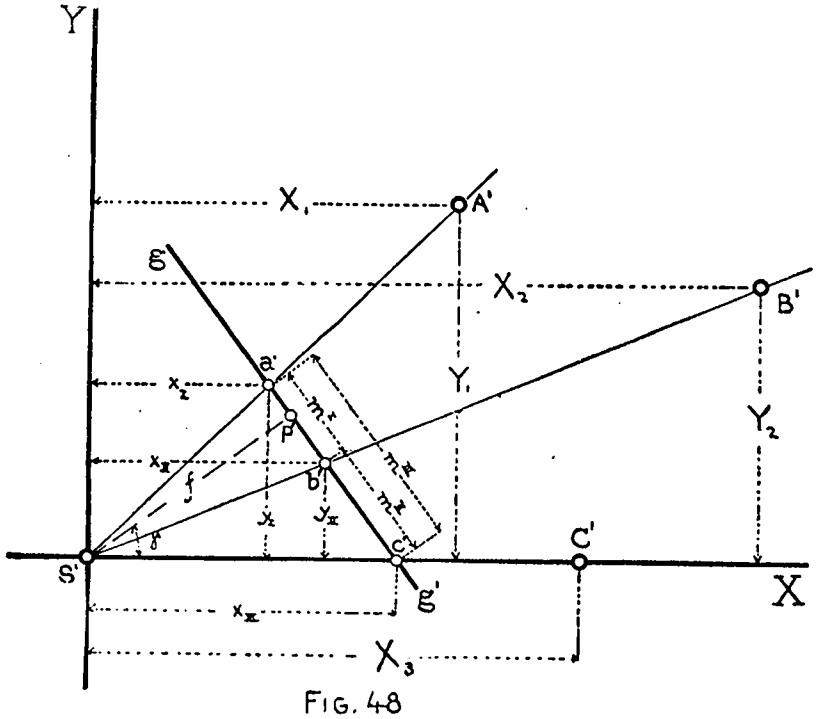

FIG. 48

The horizontal distances between a and b, b and c, a and c (which are the same as those between a' and b', b' and c', a' and c' on the picture trace) may be m^{I}, m^{II}, and m^{III}, respectively.

We will find directly, from an inspection of fig. 48:

$$(1)\ y_I : x_I = Y_1 : X_1$$
$$(2)\ y_{II} : x_{II} = Y_2 : X_2$$
$$(3)\ y_I : y_{II} = m^{III} : m^{II}$$
$$(4)\ (x_{III} - x_I) : (x_{II} - x_I) = m^{III} : m^{I}$$
$$(5)\ (x_{III} - x_I)^2 + y_I^2 = (m^{III})^2$$

From these five equations the five unknown quantities x_I, y_I, x_{II}, y_{II}, and x_{III}—the coordinates of the points a', b', and c', which are to be located—may be computed.

From the area of the triangle $S'a'c'$

$$\frac{y_I \cdot x_{III}}{2} = \frac{f \cdot m^{III}}{2}$$

we find the focal length

$$f = \frac{y_I \cdot x_{III}}{m^{III}}$$

The horizontal angle of orientation γ—included between the principal ray $S'P'$ and the horizontal direction to C ($= S'C'$)—may be found from the equation:

$$\cos \gamma = \frac{f}{x_{III}} \text{ or } = \frac{y_1}{m^{III}}$$

The principal point P' may now be located upon gg' from c' by making

$$P'c' = x_{III} \sin \gamma.$$

The differences in elevation between the camera station S and the three triangulation points A, B, and C being known, it will now be an easy matter to draw the horizon line upon the photograph and mark the position of the principal point P on the same.

II. GRAPHICAL ICONOMETRIC METHODS.

(1) *Method of Col. A. Laussedat.*—Colonel Laussedat's methods of constructing topographic maps from perspective views of the terrene, having been widely published, form the groundwork for all subsequent work in this direction; they are chiefly of a graphical character and they are in harmony with the laws of perspective.

Laussedat considers two cases in reconnaissance surveys for geographic expeditions to which photo-topographic methods may be applied with advantage:

(1) The explorer may remain sufficiently long in one locality to make a survey on a large scale, say 1:20 000, and even larger for special purposes.

(2) The explorer moves rapidly from place to place, gathering only the most necessary data on his itinerary to enable him to plat the topography of the traversed country as a "running survey" on a small scale—say 1:50 000 and even smaller—preserving and representing only the principal topographic features met with on the track survey.

In the first-mentioned case the explorer will measure one or more base lines, with as great an accuracy as the means at hand and the time at his disposal will admit. He will then cover the area to be mapped with a system of triangles, connected with (or founded upon) the base line, and, inasmuch as the triangulation stations will be occupied with the surveying camera, the scheme should be laid out with due reference to the subsequent iconometric platting of the topographic features.

When applying the ordinary surveying methods the triangulation scheme would probably be laid out with a view toward covering as large a territory as possible, occupying the least number of intervisible points. With the use of photography, however, the conditions are changed; every topographic feature that is to be platted iconometrically should be seen from two or more camera stations. The latter are to be triangulation stations, or they will have to be tied on to the general scheme by special supplementary instrumental observations. Still it is not always essential that the highest peaks, which may be included in the trigonometric survey (as concluded points), should also be occupied with the camera, as frequently other camera stations will answer the requirements just as well.

Regarding the second case, where the explorer follows a certain route, making only the most necessary (and at best but short) side excursions, the photo-topographic method is even of greater value than in the first case, particularly when traversing open and broken country. For this kind of reconnoissance it may be well claimed that the photographic method surpasses all other surveying methods regarding the amount of data which may be collected in a limited time period.

All topographic operations and instruments serve to measure vertical and horizontal angles, and a photographic perspective (of which the focal length and the positions of the horizon line and principal point are known) will give all the data needed to determine the vertical and horizontal angles of lines of direction drawn from the point of view to all points pictured on the photograph.

The points A and B, pictured on the vertical plate MN, fig. 49, may represent the images of two distant mountain peaks; a and b will be their orthogonal projections upon the horizon line HH' (picture trace in horizontal plane HH).

$a\,S\,b = \alpha$ = horizontal angle between lines of direction from the station to the two peaks, A and B. SP (perpendicular to HH') = distance line or focal length of the picture MN.

The vertical angles β and γ may be shown, in horizontal plan, by revolving the vertical

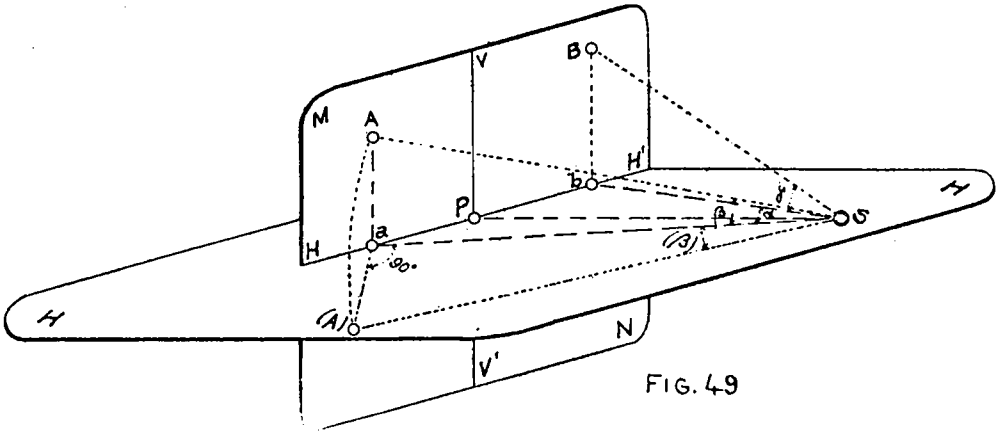

FIG. 49

planes passing through SA and SB about the lines Sa and Sb, respectively, until they coincide with the horizon plane HH. This has been done in fig. 49 for the vertical plane $S\,a\,A$:

$$a\,A = a\,(A) \text{ and } (A)\,a\,S = A\,a\,S = 90^\circ$$
$$A\,S\,a = (A)\,S\,a = \beta.$$

The vertical angles β and γ may now be measured in horizontal plan as (β) and (γ).

To indicate the general method of iconometric platting, and to show how the platted features of the terrene may be obtained from the photographs, we will refer to figs. 50 and 51.

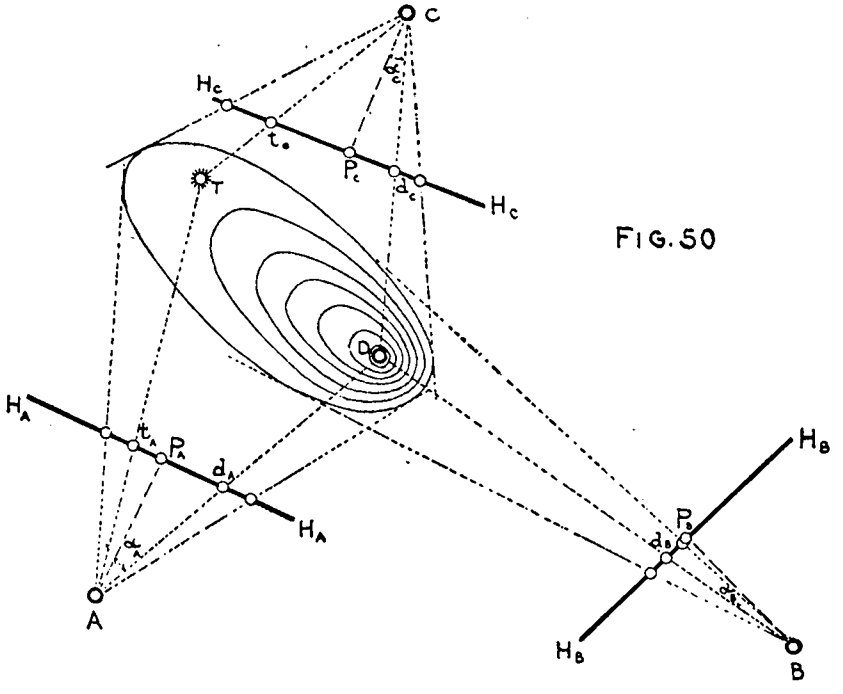

FIG. 50

A, B, and C are three camera stations, platted in horizontal plan, whence three perspectives, I, II, and III, fig. 51, of the same knoll D were obtained. The traces of these three pictures on the platting sheet, fig. 50, may be $H_A\,A_A$, $H_B\,H_B$, $H_C\,H_C$. All three photographs may have been obtained with the same camera of constant focal length—the distance lines $P_A\,A$, $P_B\,B$, and $P_C\,C$ are of equal length.

(*a*) *Locating points identified on several photographs on the platting sheet.*—The three stations *A*, *B*, and *C* are platted, either as parts of the triangulation system, or by measuring the base line *AB* on the ground and measuring the horizontal angles *CAB*, *CBA*, and *ACB*, after which the sides *AC* and *BC* may be found graphically (or by computation) and the triangle *ABC* may now be

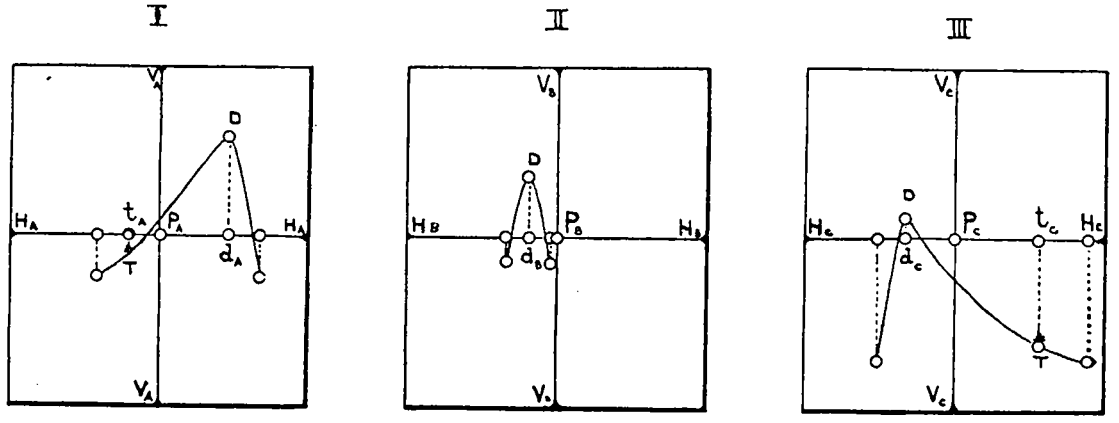

FIG. 51

platted upon the working plan. Horizontal angles or directions to *D* having also been observed from *A*, *B*, and *C*, its position with reference to those three points may also be platted. To plat the three picture traces *HH* we must know the horizontal angles *PAd* (= α), which are observed in the field for each picture by means of the horizontal circle attached to the phototheodolite.

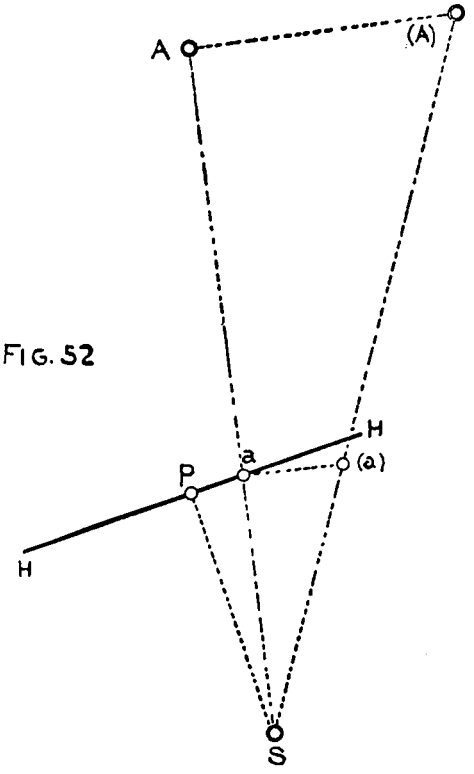

FIG. 52

The angles α are platted as α_A, α_B, and α_C, fig. 50, and the constant focal length (=*f*) of the three negatives I, II, and III, fig. 51, is laid off on the radials AP_A, BP_B, and CP_C. Perpendiculars erected to these lines in P_A, P_B, and P_C, respectively, will represent the oriented picture traces H_AH_A, H_BH_B, and H_CH_C, when the abscissæ P_Ad_A, P_Bd_B, and P_Cd_C, measured on the negatives I, II, and III, should equal the lengths P_Ad_A, P_Bd_B, and P_Cd_C on the picture traces.

The point *D* is termed a "reference point." Every picture that is to be used in iconometric platting should contain the image of at least one such reference point of known position in both the horizontal and vertical sense.

After the picture traces *HH* have once been platted, any other point, *T*, of the terrene, shown on two or more photographs, may readily be platted from the photographs without requiring instrumental measurements in the field.

To locate the platted position of the point *T*, shown on two pictures, I and III, as *t*, the abscissæ, P_At_A and P_Ct_C, are laid off on the picture traces H_AH_A and H_CH_C, respectively, from P_A and P_C and on the proper side of *P* to correspond with the position of the image *t* with reference to the principal point, *P*, of the perspectives. Lines drawn from *A* and *C* through t_A and t_C, fig. 50, represent the lines of horizontal directions to *T*, and their point of intersection locates the position of *T* on the plat with reference to *A*, *B*, and *C*.

(*b*) *Determination of the elevations of pictured points.*—The horizon line *HH'* of a perspective, fig. 49, being the intersection of the vertical picture plane *MN* with the horizon plane (passing through the optical axis of the camera), will intersect points in the picture which in nature have the same elevation as the optical axis of the camera or as the point of view *S*.

The distances Sa and SA, fig. 52, are measured on the platting sheet and the ordinate aA, fig. 49, of the pictured point a, on the negative. Perpendiculars are then erected to SA in A and a and the latter is made equal to the ordinate of a taken from the picture $= Aa = a(a)$, fig. 52. If we now draw the line $S(a)$ (to its intersection with the perpendicular in A), then the triangles $Sa(a)$ and $SA(A)$ will be similar and the angle $AS(A)$ will represent the vertical angle (of elevation) of the visual ray from S to A revolved about SA into the plane of the horizon or into the platting plan. From the similar triangles $Sa(a)$ and $SA(A)$ we derive the proportional equation:

$$A(A) : SA = a(a) : Sa$$

whence

$$A(A) = \frac{a(a) \cdot SA}{sa}$$

The value found for $A(A)$ measured on the platting scale will give the difference in elevation between camera station horizon and the point A.

In practical work the elevations of the camera stations are known, and by adding the height of the instrument including the value $A(A)$ to the elevation of S, fig. 49, the absolute height of A will be found, which, however, is still to be corrected for curvature and refraction.

A second value for the elevation of A may be found in the same manner for another negative containing the image a (taken from another station), and the mean of several such determinations is adopted for the final value for the height of A.

(*c*) *Drawing the plan, including horizontal contours.*—After some little practice points, pictured on different negatives but representing identical points in nature, will readily be identified by the observer and he will soon be able to pick out the characteristic points to reproduce the water courses, watersheds, roads, canals, etc., on the platting sheet. After these principal guide lines have been well located on the chart, buildings, outlines of woods, marshes, etc., are platted, including everything that is to be shown on the finished map.

Enough points should be platted iconometrically to give a good control for a correct delineation of the relief. When the number of points determined on the plan is sufficient, or if they are favorably located to give an adequate control only for the delineation in the horizontal sense, additional points should be platted in order to obtain an equally good control of the terrene in the vertical sense.

The planimetric work completed, elevations of as many of the platted points as seem necessary (or additional ones) are determined and inscribed on the chart. Horizontal and equidistant contours may now be drawn, by interpolation, to harmonize with the elevations suffixed on the chart to the points of control, conforming their courses (between the located points) to the configuration of the terrene, as it is shown on the photographs.

It can not be denied that a certain amount of study and practical application are required to enable the draftsman to correctly interpret forms of the terrene, shown in perspective. Yet, it should also be admitted that such translation or conversion of the relief of the terrene into the horizontal map projections may be far more accurately accomplished (at one's leisure) by means of geometrically correct perspectives, than could be accomplished by sketching in the field. When topographic features are sketched, as seen from one direction, they will frequently be found to have been misconceived when they are seen again from another (not anticipated) point of view. Of course, the platted forms may then be corrected in a measure, at least, still, many details are sketched which will not be seen again from other stations, and, even those that are seen again under other conditions may not be modified to conform to their true shapes, unless the original station, whence they were first seen and sketched, could be reoccupied to verify the suggested changes and corrections. Generally speaking, topographers regard a second occupation of a station with little favor, it being considered too great a waste of time, retarding progress, and considerably increasing the cost of the work.

In iconometric platting, however, it is always an easy matter to refer back again to panoramic views obtained from some other station, and the platting of topographic details should not be attempted without having first made a careful study of and a close comparison between the various pictures representing the same features but seen from different points of view.

(*2*) *Method of Dr. A. Meydenbaur.*—The pantoscopic lens (made by E. Bush, Rathenow,

Prussia) of Dr. Meydenbaur's surveying camera commands an angle of about 100°. By excluding an external ring of the effective disk of these lenses by means of a diaphragm, pictures are obtained subtending an angle of but 66°, requiring six plates for a complete panorama.

This camera has neither telescope nor vertical circle but it is provided with a horizontal circle, thus enabling the operator to control the revolutions of the camera in azimuth.

After this camera has been set up and adjusted over a station the panorama is photographed by exposing six plates in succession, each successive turn in azimuth of the camera covering an angle of 60°, fig. 53, and two adjoining plates lapping over each other by 3° in arc. These common margins (like Paganini's plates) contain identical sections of the panorama view. They may serve to find the value for the focal length of the pictures, and they control the permanency of the camera's adjustments during one complete revolution in azimuth.

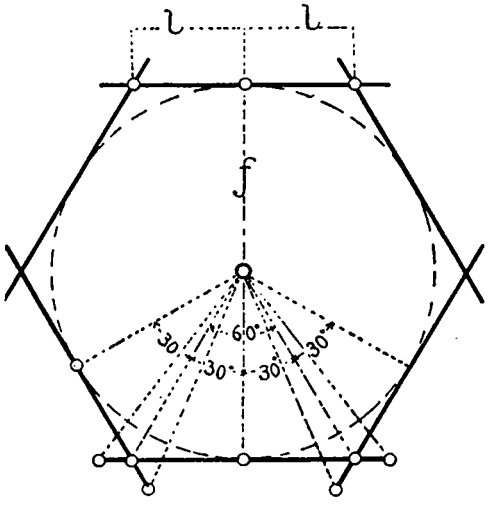

FIG. 53

(*a*) *Determination of the focal length for the panorama views.*—From the six plates, covering the entire horizon from one station, objects may be selected on the center lines of the common margins of adjoining plates which should be equidistant from the principal lines of the two plates.

After having selected a series of such reciprocal points (using a magnifying glass if necessary) on all six plates, we will have obtained twelve determinations, represented by the length l, for the position of the principal line. The greatest discrepancy between any two values should not exceed 0·2 mm, if the instrument was well adjusted. The sum $=2l$ of two such distances (between two of the corrected principal lines) will represent the effective lengths of one picture, or the length of one side of a regular hexagon, with an inscribed circle of the radius equal to the constant focal lengths ($=f$) of the negatives.

This length $=f$ may be found graphically or it may be computed from the formula:

$$f=\frac{l}{\tan 30^\circ}$$

When positive prints are to be used in the iconometric map construction it will become necessary to correct this focal length f to correspond with any changes that may have taken place in the dimensions of the prints when compared with their negatives. By comparing the distances between the "teeth" (marking the principal and horizon lines) on the negative with those included between their contact prints on the positive the total linear changes of the print in the directions of the principal and horizon lines are readily found.

We have with reference to fig. 54: ab = original length included between the teeth marking the horizon line on the negative. $a'b'$ = length of horizon line (included between the pictured teeth) on the positive print. $co = f$ = constant focal length of camera or negative.

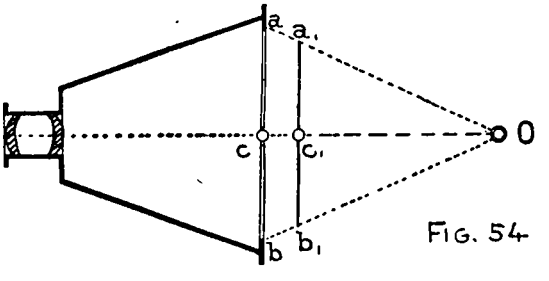

FIG. 54.

If we draw the triangle abO, place the line $a'b'$ (measured on the print) parallel with ab and move the same (maintaining its direction parallel with ab) toward (or from) O until a' falls upon ao and b' upon bo, then $c'O$ will be the focal length of the photograph ("contracted," in our case). This determination of f should be made for every print that is to be used in the iconometric map construction.

The topographic map is graphically constructed from the negatives and prints in a manner very similar to that described for Colonel Laussedat's method.

(*b*) *General method of iconometric platting.*—With reference to fig. 55 we have:

I and II = two negatives of plates exposed from camera stations I and II, respectively.

I II = baseline, measured in the field.

The elevations of camera stations I and II may be known and negative I may contain the image of station II, negative II that of station I. After the baseline I II has been platted in reduced scale (in the scale of the proposed map), circles are described about I and II as centers

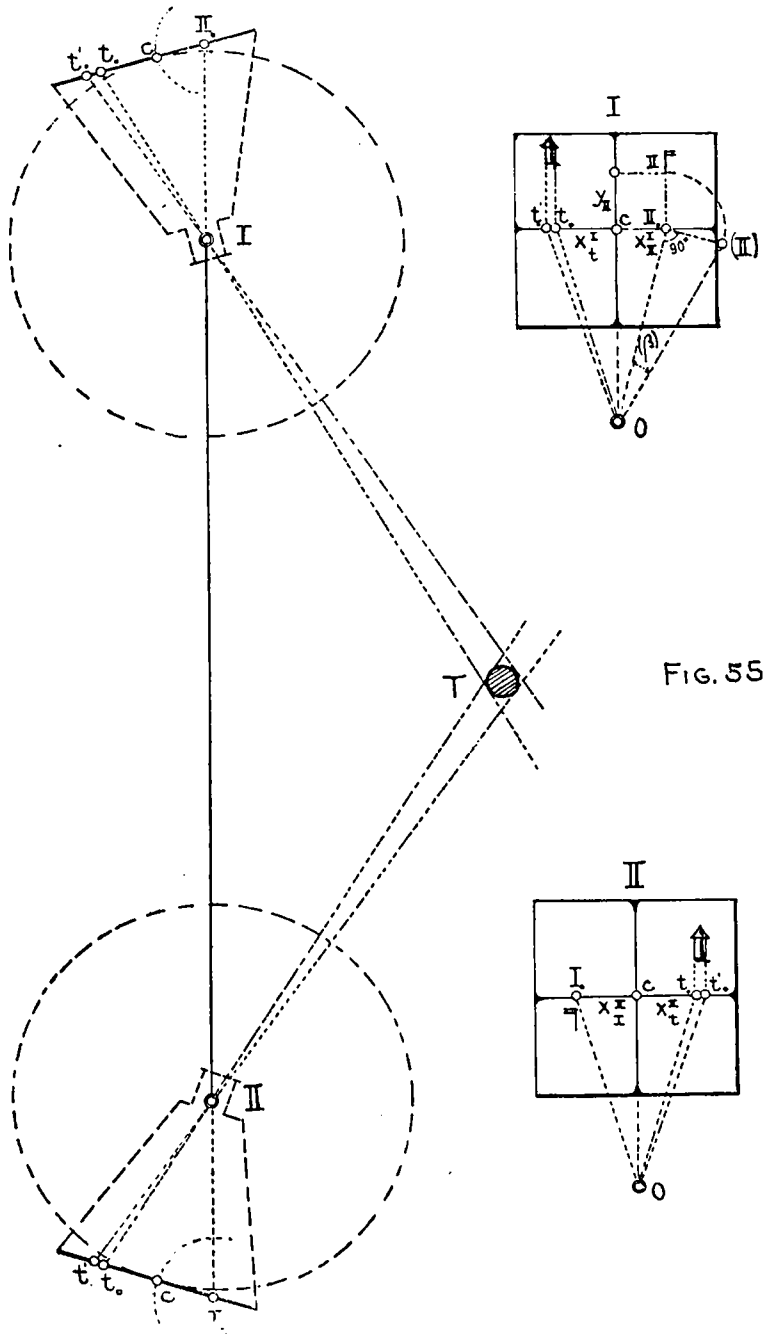

FIG. 55

with radii $= cO = f =$ constant focal length of the negatives. Then make

$$I\,II_o = OII_o \text{ (Pl. I) and}$$
$$II\,I_o = OI_o \text{ (Pl. II).}$$

Describe arcs from II_o with $II_o c = x^{I}_{II}$ (plate I) and from I_o with $I_o c = x^{II}_{I}$ (Pl. II) as radii, transpose $ct_o = x^{I}_{t}$ (Pl. I) on the tangent $II_o c$ and $ct_o = x^{II}_{t}$ (Pl. II) on the tangent $I_o c$.

The prolongations of t_oI and t'_oI will be tangential directions to the sides of the tower T (pictured on Pls. I and II) from camera station I, and t_oII and t'_oII will be the tangential directions to the sides of the same tower T from station II. These four tangents intersect each other at T in a quadrangle, the inscribed circle of which will represent the position of the tower (in horizontal plan) with reference to the baseline I II.

Any other points, common to both Pls. I and II, may be located in horizontal plan in pre-

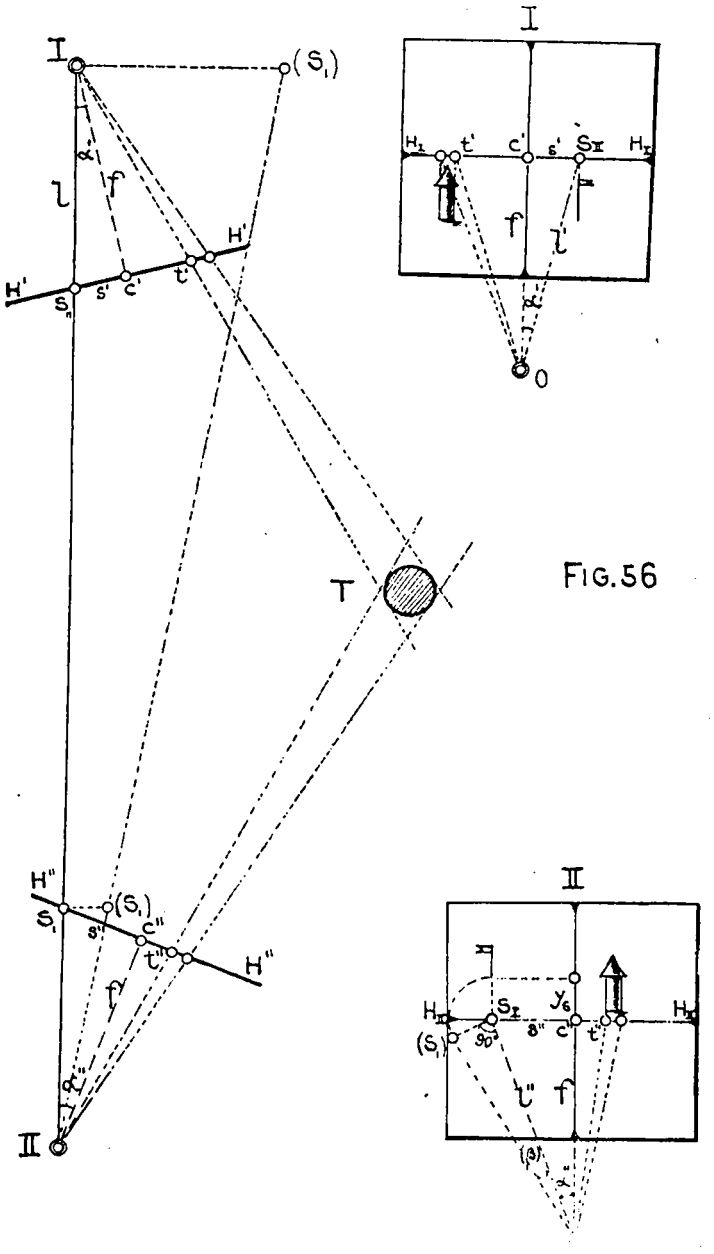

FIG. 56

cisely the same manner. The method just described is general in character, but when the camera is provided with a horizontal circle, enabling the observer to cover the horizon with six plates by revolving the camera exactly 60° in azimuth after each exposure, the following method is generally applied:

The constant focal length $= f$ of the negatives is laid off on the principal line below the principal point $= c'O$ for negative I and $= c''O$ for negative II. The images of the stations are projected upon the horizon lines, S_{II} upon H_IH_I (Plate I) and S_I upon $H_{II}H_{II}$ (Pl. II) when

$c'OS_{II} = \alpha'$ represents the horizontal angle included between the principal plane and base line I II, and $c''OS_{I} = \alpha''$ represents the corresponding horizontal angle for station II. These angles α' and α'' are transferred from the negatives I and II to the corresponding ends of the base line I II, as indicated in fig. 56.

After laying off the focal length f from the base stations I and II upon the sides of the angles α' and α'' ($= Ic'$ and IIc'' respectively) and erecting perpendiculars ($H'H'$ and $H''H''$) in c' and c'' to Ic' and IIc'' respectively, they will represent the oriented picture traces of negatives I and II.

The remaining two sets, of five plates each, of the panorama views at the stations I and II, are easily oriented and platted, the next plate in order at station I, for instance, will have the optical axis in the direction $\alpha' + 60°$, the third: $\alpha' + 120°$, etc.

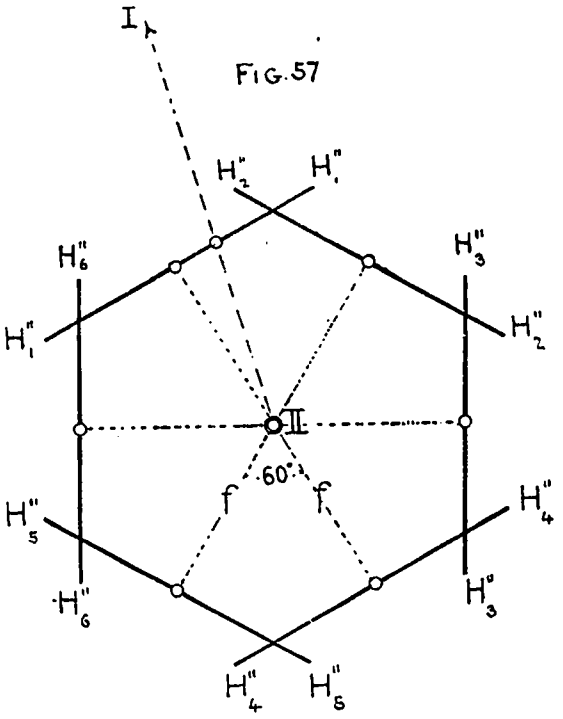

FIG. 57

After all the horizontal projections of the vertical plates (picture traces) H_1H_1, H_2H_2, ... H_6H_6, fig. 57, have been platted at both stations I and II, the horizontal projections of all points that may be identified on two plates are marked and platted by locating the intersections of the lines of direction drawn through the projections on the picture traces of the pictured points in the same manner as shown in fig. 56 for the tower T. Every platted camera station will be surrounded by a regular hexagon formed by the picture traces of the six plates comprising the panorama set.

(*c*) *Determination of the elevations of pictured points of the terrene.*—The projection in horizontal plan of an object having been platted, the elevation $I(S_1)$ of that object S_1 above (or the depression of it below) the horizon, HH, of the camera station II may be found as follows:

The lengths IIS_1 ($= OS_1$ on Pl. II) and I II, fig. 56, may be measured on the platting sheet, and the ordinate y_s may be taken from the negative II.

We erect perpendiculars to I II in $S_1 = y_s = S_1\,(S_1)$ and in I, then draw the line $II(S_1)$ to its intersection (S_1) with the perpendicular to I II in I, when the length $I(S_1)$, measured in the platting scale, will represent the difference in elevation between the points I and II.

By computation we would find from:

$$I(S_1) : y_s = I\,II : S_1\,II$$

$$I(S_1) = y_s \frac{I\,II}{S_1\,II}$$

If the scale of the map is $\frac{1}{M}$, we will have:

$$I(S_1) = M.y_s \cdot \frac{I\,II}{S_1\,II}$$

The values of y_s, $I\,II$, and $S_1\,II$ are found by direct measurements with a small ivory scale divided into 0·5 mm., of which 0·1 mm. may be estimated after a little practice.

(3) *Method of Capt. E. Deville (Canadian method).*—This so-called Canadian method has been in use under the auspices of the department of the interior of the Dominion of Canada since 1888. Deville has given a full account of these methods in Photographic Surveying, published at the government printing bureau, at Ottawa, in 1895, and the following paragraphs have been largely taken from Deville's book:

(*a*) *General remarks on field work.*—The area to be surveyed is covered with a triangulation net, preferably before the phototopographic survey is commenced, and a secondary triangulation is

carried along with the phototopographic work to locate the camera stations in both the horizontal and vertical sense, with reference to the primary triangulation stations already established.

The surveyor makes a rough plat of the entire triangulation (in the field), on which he locates all the stations occupied to enable him to recognize the weak points of his work and to plan his operations with a thorough understanding and good assurance of success. The instrumental work in the field is done merely to locate the camera stations and certain reference points (if the triangulation points are not sufficiently close together), all topographic features being deduced from the pictures.

The camera stations are located either by angles taken from the station to surrounding triangulation points, by resecting, or by angles observed from the latter to the signal left over the camera station, by intersecting, or by both methods combined.

The final value of the work depends in a great measure upon a judicious selection of the camera stations in order to bring the relief of the entire terrene under proper control and to be enabled to plot all points needed for a full development of the terrene by the method of intersections of horizontal lines of direction.

Other methods for platting the topographic features and details are employed only when the method of intersections fails on account of the camera stations not being well situated, or on account of an insufficiency of data to give the requisite number of horizontal lines of direction for a good location of points by "intersecting."

Each camera station should be marked by a signal of some kind before leaving it, not to be shown on the pictures, but to be observed upon with the transit or altazimuth from other stations in order to locate the correct position of the camera station on the platting or working plan.

Frequently it will be of advantage to set the camera up excentrically over a triangulation station in order to include certain additional parts of the landscape in the views. The position of the excentric camera station, with reference to the triangulation point, can readily be ascertained, and should always be carefully recorded.

Complete panorama sets are not taken at every camera station, it being preferred, rather, to increase the number of stations, often occupying a station to obtain a single view only, if by doing so better intersections for the iconiometric location on the platting sheet of some special feature are obtained. Multiplicity of stations demands but a small increase in labor, either in the field, in the extra observations of directions to reference points for their location, or in the iconometric platting in the office, and enough stations should always be occupied to give a full control of the relief of the area to be surveyed.

A certain section of the terrene may be so located that it will be a difficult matter to select more than one station whence it may be seen. In such a case the method of "vertical intersections" may often become useful: Two or more views of such area are taken from stations at different *elevations*, the greater the difference in altitude between such stations the longer will the base line be, and the better are the intersections which locate the features in question, if the latter are not too far away.

As enough plates should be exposed to cover the ground completely, the camera stations will have to be distributed in such a way that all valleys, sinks, and depressions, that may be represented in the scale of the map, are well controlled (i. e., seen from different camera stations). It is evident, therefore, that the number of stations to be occupied for the phototopographic development of a certain area will depend in a great measure upon the character of the terrene and upon the scale of the chart.

Two or three well-defined points (so-called reference points) in each panorama view (covered by one plate) are observed with the transit or altazimuth noting and recording the vertical and horizontal angles upon the outline sketch made for every plate exposed. Such sketches serve to identify points with far more certainty than a mere designation or description of the points observed upon. The general triangulation notes are kept in the usual manner.

Vertical angles are observed to check the position of the horizon line on every photograph and to correct errors due to small changes in the level adjustments of the camera that may arise during the transportation of the instrument over a rough trail. The horizontal angles are needed for the location of the camera stations and for the orientation of the pictures (picture traces) on the platting sheet for the subsequent map construction.

(*b*) *General remarks on the iconometric platting of the survey.*—The field notes of the phototopographic surveys made in the Northwest Territory of the Dominion of Canada by the topographical surveys branch of the department of the interior (under Capt. E. Deville, surveyor of Dominion lands), are platted on a scale of 1:20000, but the maps are published on a scale of 1:40000, with (equidistant) contours of 100 feet vertical intervals.

The phototopographic reconnaissance in southeastern Alaska, executed by Dominion land surveyors under Dr. W. F. King, Alaskan boundary commissioner to Her Majesty, was platted on a scale of 1:80000 and published on a scale of 1:160000, with horizontal contours of 250 feet vertical intervals.

It is assumed that the triangulation computations have been made and that the triangulation points have all been platted, and that their elevations above the adopted reference plane have been affixed to the marked points on the platting sheet.

The triangle sides of the secondary triangulation scheme (executed during the phototopographic survey) are now computed (the corrections to the horizontal angles, indicated by the closing errors, having been applied), the latitudes and departures (from every secondary point to the nearest primary station) are computed, and the secondary stations are then platted by their latitudes and departures (unless the primary triangulation sides are too long).

The camera stations (not included in the secondary triangulation scheme) are now platted with reference to the triangulation points, using a table of chords or a station pointer (three-arm vernier protractor). If many points had been observed upon from the camera station, the horizontal angles are preferably laid off on a piece of tracing paper, and this improvised multi-arm protractor is used like a station pointer to locate the station.

The surveyor should endeavor to obtain at least one direction from a triangulation station to every camera station; the (iconometric) platting will then be less troublesome and more accurate.

Photographs should not be used for platting the positions of camera stations, as this would not locate them with sufficient precision, and enough angles should always be observed in the field to locate every occupied station in the manner just mentioned.

From the original negatives copies are made, enlarged to 9½ by 13 inches on heavy bromide paper, more recently, however, a special brand of bromide paper, known as "platino-bromide," has been used by Captain Deville. The enlargement adopted in Canada for these bromide prints is about 2.1 times larger than the negatives, which ratio was selected to utilize the full width of the paper found in market.

These bromide enlargements are used extensively in the map construction, and they should be made with great care to reduce distortion to a minimum. Before using the prints for the map construction any distortion due to the enlarging process should be ascertained, which is done in the following manner:

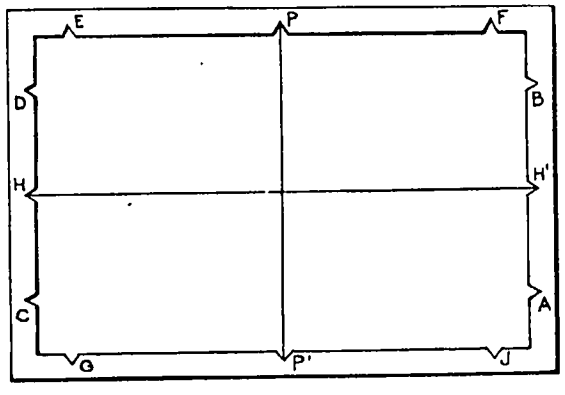

FIG. 58

Join the middle notches H and H', indicating the position of the horizon line, and P and P', representing the position of the principal line, fig. 58, and with a set square test these two lines for perpendicularity. Take with a pair of dividers the distance between the two notches A and B (which on the negative is equal to one-half of the constant focal length) and see whether it is

equal to the distance of the corresponding two notches C and D. Now apply one of the points of the dividers in P; the other should come in E and F. Transfer the point to P' and check the length $P'G$ and $P'J$ in the same way. If the print satisfies all these tests, it may be used for the iconometric platting; if it does not, it is returned to the photographer with a request for a better one.

(c) *Platting the picture traces.*—Every photograph contains at least one, generally several, of the triangulation points platted on the working sheet, and the traces of both the picture plane and principal plane are found and platted on the plan as follows:

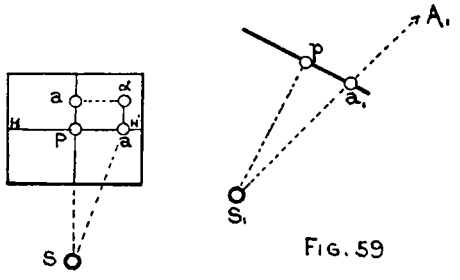

FIG. 59

The distance, or principal line PS, fig. 59, is made equal to the focal length of the picture, and the image point α of the point A is projected upon the principal line ($= a$) and upon the horizon line ($= a'$). If S_1 represents the platted position of the camera station S on the plan, and if $S_1 A_1$ represents the horizontal direction on the plan from S to A, we make $S_1 a_1 = Sa'$ (taken from the photograph) and from a_1, as center, with $\alpha\, a$ ($= Pa'$) as radius, describe a circle to which $S_1 p$ is drawn tangent, then $S_1 p$ = trace of principal plane and the perpendicular to $S_1 p$ through $a_1 = pa_1$ = trace of picture plane.

Instead of making this construction on the "photograph board," which will be described further on, it can be made on the plan itself, as follows:

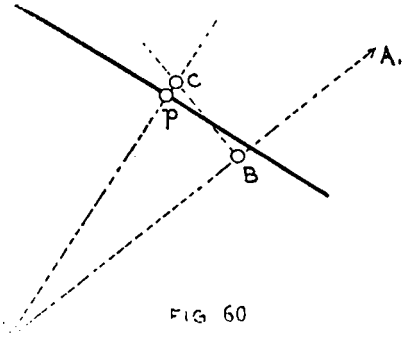

FIG. 60

On $S_1 A_1$ take $S_1 B$, fig. 60, equal to the focal length of the print; erect BC perpendicular to $S_1 A_1$ in B and equal to $\alpha\, a$, fig. 59. Join $S_1 C$ and take $S_1 p$ equal to the focal length; at p erect a perpendicular to $S_1 C$ and it will represent the trace of the picture plane, while $S_1 C$ is the trace of the principal plane.

Another simple method, avoiding the drawing of constructive lines on the plan, is as follows:

Take a triangle of hard rubber or wood and mark off along one side the focal distance *SP*, fig. 59, of the print, = *ab*, fig. 61, and carefully notch the triangle side at *b* so that the center of a fine needle, marking the platted station point, will just fit into the notch. From the print, fig. 59, take the abscissa of the pictured point $\alpha = a\alpha = Pa'$ between the points of a pair of dividers, move the triangle, fig. 61, about the needle (which marks the platted station) with the left hand until *ac*, fig. 61, is equal to the distance $a\alpha$ held between the points of the dividers. The triangle is held securely in this position and lines are drawn along the triangle sides *ab* and *ac*. Prolong *ac* beyond *a* and check the distance *ac* again to be = $a\alpha$. The line *bc* represents the horizontal direction from the platted station *b* to the platted reference point *c* (on the negative, fig. 59, the picture of the corresponding reference point is α). We will now have: *ba* = trace of the principal plane, *ac* = trace of the picture plane, *a* = projection of the principal point on the platting sheet.

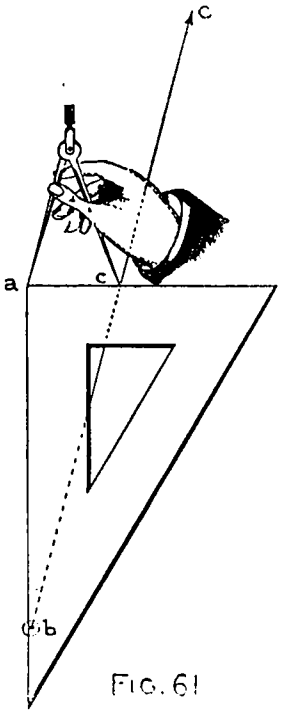

FIG. 61

The trace of the principal plane (= *ab*) is preferably marked on the platting sheet by a short line only, bearing an arrow pointing toward the platted station (*b*) whence the picture was taken, and the principal point *a* is marked to correspond with the designation of the print. It may be remarked here that as few lines as possible are drawn on the platting sheet to avoid confusion and mistakes. (See photograph board.)

(*d*) *The identification of pictured points on several photographs representing identical points of the terrene.*—The topographic survey being platted mainly by the intersections of horizontal directions, points controlling the relief of the same area must be identified on sets of pictures taken from different stations. When selecting such points on a photograph preference should be given to those which best define the surface relief or terrene, like characteristic points of ridges, peaks, saddles, changes of slope, changes in the river courses, etc., each point being marked by a dot in red ink on the photograph and having a number or symbol affixed to it. It will now be necessary to identify as many of these points as possible on other photographs, covering the same area, and these are similarly marked by red dots, and identical points are given the same designation by number or symbol in red ink.

The identification itself of points on several pictures offers no serious difficulties, and, with some practice, as many points as may be needed for a full development of the terrene, even under different illumination of the pictured areas, may be picked out with rapidity and certainty.

(*e*) *Application of Professor Hauck's method for the identification of pictured points.*—In cases of doubt, when attempting to identify the same point on two different photographs, beginners may take advantage of Professor Hauck's method, which has been described in Chapter I, Paragraph VII.

The two photographs are pinned side by side on a drawing board. The images of the camera stations whence the pictures were obtained are "kernelpoints," and if they fall outside of the picture limits they are determined from the ground plan and platted on the drawing board. The parallels to the principal lines of the photographs on which the scales are to be laid off are drawn in the manner explained in Chapter I and the scales are fixed in position. A fine needle is now inserted into each of the "kernelpoints" and the loop at one end of a fine silk thread is dropped over each needle, the other end of the thread being secured by a slender rubber band to a small paper weight (fig. 62).

A well-defined point is now identified on *both* photographs, sufficiently far from the "kernel points," and one thread is moved by taking the paper weight up and passing its thread, under gentle tension of the rubber band, through the point just identified on the photograph, when the weight is deposited upon the drawing board, holding the thread in the given position. The same operation is repeated with the other silk thread and the other photograph, when the two threads should intersect the scales at identical division marks. If they do not, one of the scales is to be moved until both threads bisect the same division marks of the scales.

Now the identification of the doubtful points may be proceeded with. Having selected a point on one of the photographs, the corresponding silk thread is moved to bisect that point, noting the position of the thread with reference to the scale in this position. The other thread is moved to bisect the corresponding graduation mark on the second scale, when this thread will also bisect the corresponding point on the second photograph.

(*f*) *Platting the intersections of horizontal directions to pictured points.*—After enough pictures have been selected to control the cartographic development of a certain area and the identification and marking of corresponding points have been completed, projections of all these points on the horizon lines of the pictures are marked (their abscissæ are measured) and transferred to the straight edge of a strip of paper, including the marking on the paper strip of the principal point of every photograph. Each paper strip bears the same designation (in red ink) as the picture to which it belongs.

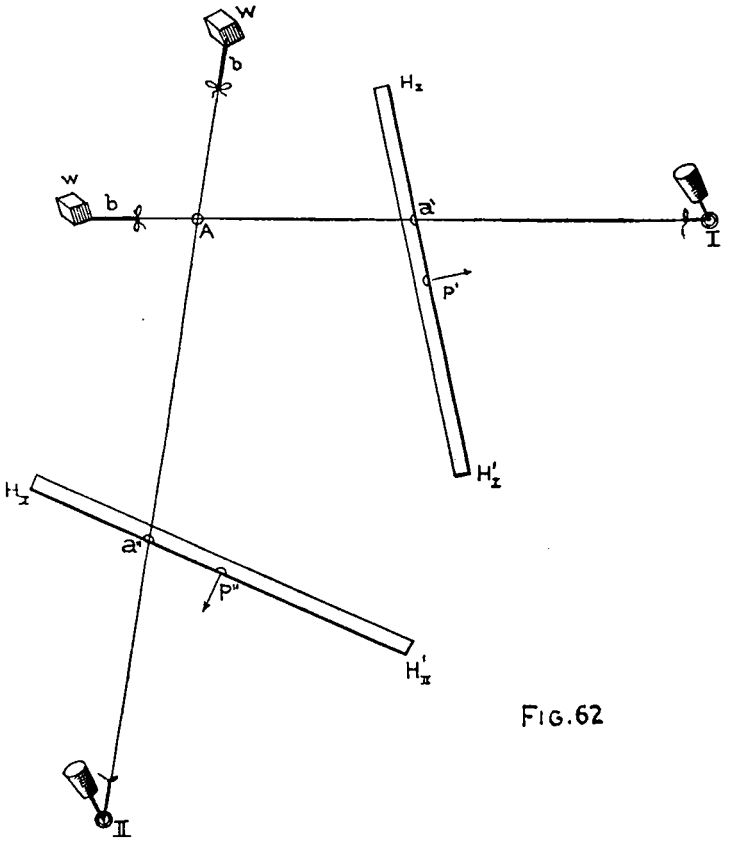

FIG. 62

These strips are now placed upon the platting sheet on the picture traces to which they belong in such a manner that the principal points of paper strips and picture traces coincide, and in this position they are securely held to the working sheet by means of small thumb tacks or paper weights.

To plat the horizontal projections of a point, shown and marked on two prints, two fine needles are inserted into the platted station points *I* and *II*, fig. 62 (of the two prints) and a fine silk thread attached to a small paper weight *w* (by fine rubber band *b*) is secured to each needle by a loop.

The thread attached to station needle *I* is now moved over the weighted paper strip (indicating the picture trace on the plan) until it bisects the horizontal projection *a'* of the picture point *a*. The weight is now placed upon the working plan, holding this thread (under slight tension) in this position. The second thread, attached to the needle in station *II*, is placed over the projection *a''* of the image of the point *A*, also under tension of the rubber band. The point of intersection of the two threads will be the position on the plan of the point to be platted (= *A*). After this position of *A* upon the plan has been checked, in the same manner, by means of another photograph (thread and paper strip) taken from a third station, *III*, and containing the image *a'''* of the point *A*, its platted position is marked by a dot in red ink and its designation corresponding with that given on the prints is also affixed.

After a sufficient number of points have been platted in this manner by intersections, and after they have all been supplied with the letters or numerals given them on the prints, their elevations are determined and also added in red ink. Frequently the designation of the points by letters or symbols are only added in pencil on the working sheet, to be erased after the elevations of the points have been affixed to them in red ink.

When the strips of paper should overlap each other, as shown in fig. 63, the part *CD* of the picture trace *PQ* is marked off on the strip *MN* lying under *PQ*, the paper strip *PQ* is placed in proper position, and the marks on its edge are transferred to the line *CD*. The strip *PQ* is now placed under *MN*, the marks on the latter along *CD* serving the same purpose as those of *PQ*.

When a station, A, fig. 64, falls so close to the edge of the working board that the trace QR (of the picture plane) falls outside of the limits of the plan, then the trace AC of the principal plane is produced to B, making $AB = AC =$ focal length of the picture, and MN is drawn perpendicular to BC or parallel to QR. The line MN will, with reference to QR, occupy the same position as the focal plane of the camera does to the picture plane of the perspective. The direction of a point of the photograph projected in Q on the picture trace is found by joining NA and producing to the opposite side of A.

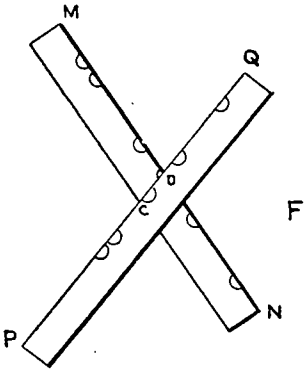

FIG. 63

As mentioned before, the intersection of the first two lines of direction should be checked either by a third line or otherwise before the position on the plan of a pictured point should be accepted as correct. Such intersections may, for instance, be checked by determining the height of the point from both photographs. Unless correctly platted and correctly identified, the two values for its height will not agree. This check, however, does not guard against slight errors in platting. A check may also be obtained by drawing a line, on which the point is situated, with the perspectograph or perspectometer, but the best check will always be a third intersecting line of direction from a third station.

(*g*) *Platting pictured points iconometrically by vertical intersections.*—We had seen how the base line between two stations is projected into horizontal plan for the method of horizontal intersections hitherto considered, but when two camera stations are occupied at different elevations (and close together horizontally) to locate features of the terrene by intersections, the so-called "method of vertical intersections" is employed. With this method the base line (its horizontal projection being either too short or more frequently falling into the direction in which the points to be located iconometrically are situated) is projected upon a vertical plane. The greater the difference in elevation between the two stations, the greater the length of this base-line projection in vertical plane, and also the better the location of the points by vertical intersections will be.

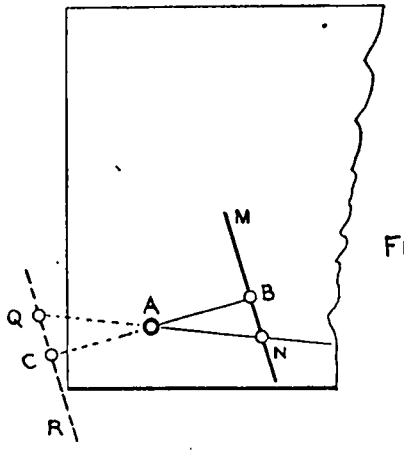

FIG. 64

We will have with reference to fig. 65:

A and B = positions of the two camera stations, platted upon the working sheet. (A is more elevated than B). aB = horizontal projection of the base line AB. A_N and B_N = two negatives (showing the images d_A and d_B of the same point D) exposed at the stations A and B respectively. $H_{AB}H_{AB}'$ and H_BH_B' = picture traces of the two negatives on the ground plane or working sheet. $aP_A' = BP_B'$ = focal length of the negatives A_N and B_N.

We will assume that the horizontal plane passing through the lower station (B) is the ground or platting plane, and the principal plane of the negative A may be taken as the vertical plane of projection. $H_{AB}H_{AB}'$ will then be the trace of the picture plane A_N on the ground plane.

Furthermore, the principal plane, of which aP_A' is the trace in the ground plane, is supposed to be revolved about aP_A' into the ground or platting plane in order to simplify the construction.

To plat the position in the ground plane of a point D, pictured on A_N and B_N as d_A and d_B respectively, the rays Ad_A and Bd_B are projected upon the vertical plane (revolved about aP_A' into the ground plane) when (d_1), in fig. 65, will represent their point of intersection d, projected into the vertical plane = d_1, and revolved about aP_A' into the platting plane = (d_1).

The ray $Ad_A = AD$ intersects or penetrates the picture plane A_N at a distance = d_Ad_{AB}' vertically above d_A', on its picture trace $H_{AB}H_{AB}'$ (ground line of picture A_N). This ordinate is laid off upon $P_A'H_{AB} = P_A'$ (d_A), when (d_A) will be the projection on the vertical plane of the pictured point d_A.

The vertical through a projected upon the vertical plane is represented as a (A), and if we make a (A) = P_AP_{AB}' (of picture A_N) = difference in elevation between the two stations A and B,

then (A) will be the upper camera station A projected into the vertical plane, and the line connecting A with the point (d_A), just found, will be the projection into vertical plane of the ray Ad_A or AD (revolved about aP_A' with the vertical plane into the platting plane).

The ray $Bd_B = BD$ intersects the second picture plane B_N in d_B. If we draw through d_B' (projection of d_B in ground line H_BH_B') a perpendicular to $aP_A' = d_B'd_{1B}$, then d_{1B} will be the projection into the vertical plane of the horizontal projection in the picture trace of the picture

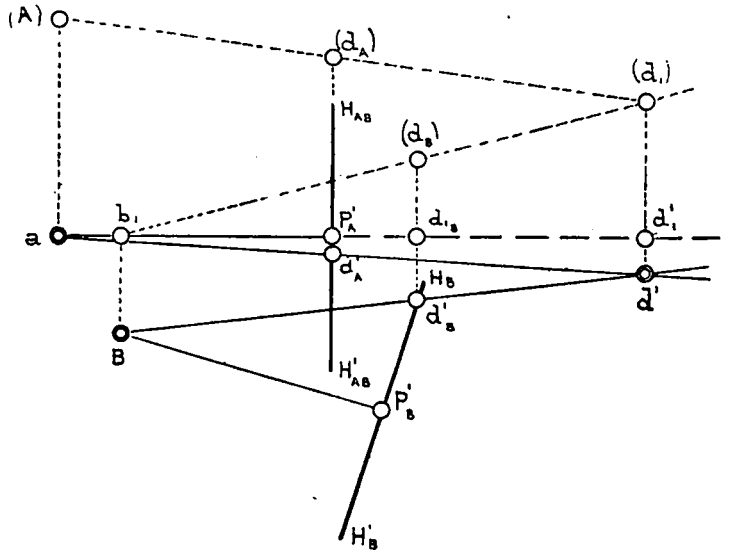

FIG. 65

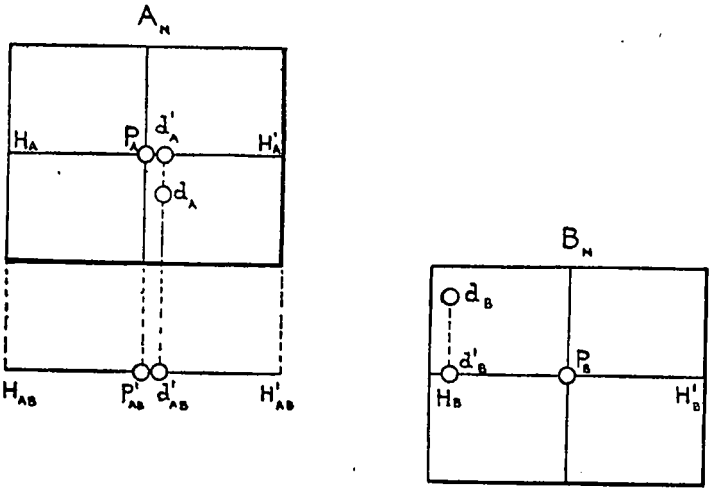

point d_B. Producing $d_B'd_{1B}$ and making d_{1B} $(d_B) = d_Bd_B'$ (measured on the negative B_N) will locate at (d_B) the projection of the pictured point d_B upon the vertical plane.

The perpendicular to aP_A' through B will locate the projection into the vertical plane $= b_1$ of the platted station B, hence the line connecting b_1 with (d_B) will be the projection into the vertical plane of the ray $Bd_B = BD$.

The intersection (d_1) of b_1 (d_B) with (A) (d_A) locates the projection into vertical plane of the point sought, d, and the horizontal projection of this point d (the platted position of the original point, D) will be on the line (d_1) d_1' (which is the vertical through d, or in our case the perpendicular to aP_A' from (d_1)), and either horizontal directions ad_A' or Bd_B', produced to intersect this perpendicular (d_1) d_1' will locate the horizontal projection d' of the point d, representing the position on the platting sheet of the point D with reference to the platted stations a and B. (The

location of d' as the intersection of the horizontal directions ad_A' and Bd_B' would not be very accurate for our case, and far less so for pictured points on the other side of the principal point P_B', where the angles of intersection of the horizontal directions would be even smaller than at d'.)

The point d_1' being the projection into the vertical plane of the point d' (= horizontal projection into the ground plane of the point d) the length $(d_1)\ d_1'$, measured on the platting scale, will represent the elevation of the point D above station B.

(*h*) *Iconometric determination of elevations.*—Generally speaking, one perspective will not suffice to determine the height of a point, although there are exceptions, like the points on the horizon line, which have the same elevation as the camera station.

With reference to fig. 66 we have: d_1 = horizontal projection of the point D. Bd_1 = horizontal distance between platted station B and platted position d of point D (measured in platting scale on working sheet). Bd_{1B} = horizontal distance between station B and projection of pictured point d_B in ground line $H_B\ H_B'$, measured on platting sheet. $d_{1B}\ (d_B) = h$ = ordinate of pictured point d_B above ground line (revolved with vertical plane about Bd_{1B} into platting plane), measured

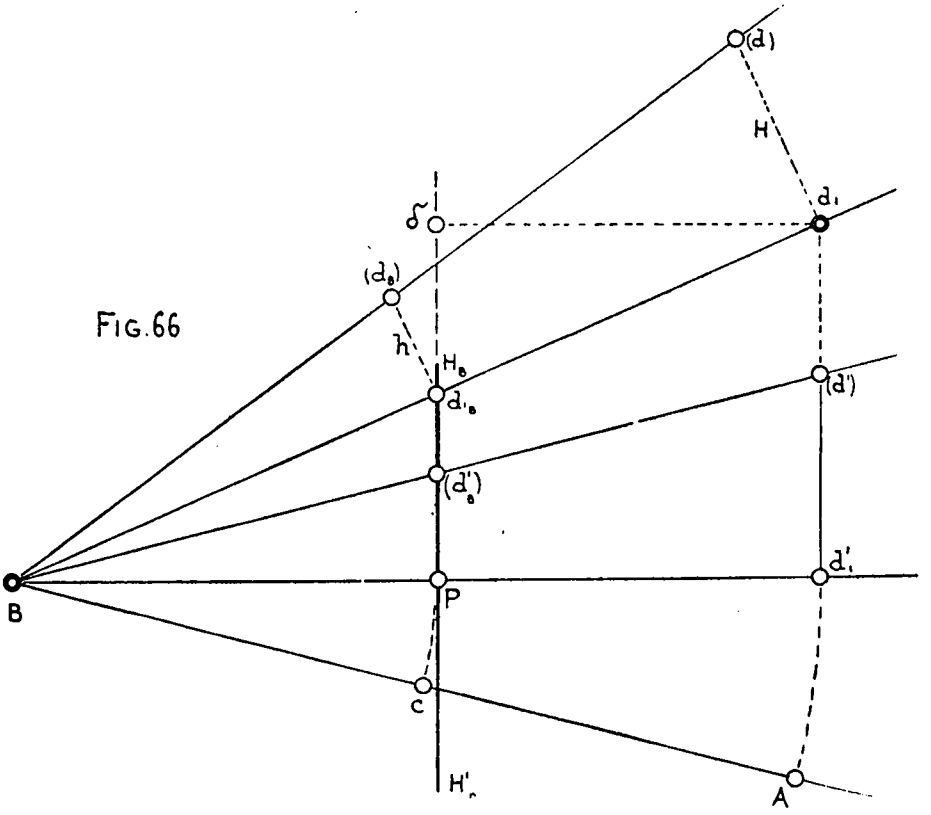

FIG. 66

on picture. $d_1\ (d) = H$ = height of point d above the ground plane (revolved into the ground plane with the vertical plane about Bd_1). Measured on the platting scale, it will give the height of D above the camera horizon (ground plane = horizon plane).

The height H is a fourth proportional to the three known lengths Bd_1, Bd_{1B}, and $d_{1B}\ (d_B)$.

After projecting the platted point d and the pictured point d_B into the principal plane, and after revolving the latter about the principal line BP into the platting, or ground plane, we will have:

$P\ (d_B') = h$ = height of pictured point d_B above the platting plane. (d'_B) = pictured point d_B, projected into the principal plane and revolved with the latter about the principal line into the platting plane. $(d')\ d_1'$ = vertical height of the point d, projected into the vertical plane and revolved with the latter, about the principal line, into the platting or horizon plane; hence $(d')\ d_1' = H$ = elevation of d above the horizon plane.

This height = H being the fourth proportional to the three known lengths:

$BP = f$ = focal length of the print. $P\ (d_B')$ = ordinate of pictured point d_B, measured on

photograph, and $Bd_1' = f + Pd_1'$; where: Pd_1' = vertical distance between the platted point d_1 and the picture trace H_BH_B', to be measured on the platting sheet, its value ($=H$) may be found mechanically with aid of an ordinary sector, fig. 67, as follows:

Take with a pair of dividers the (ordinate) distance from the pictured point d_B to the horizon line (on the photograph), place one point of the dividers on the division C of the sector, fig. 67,

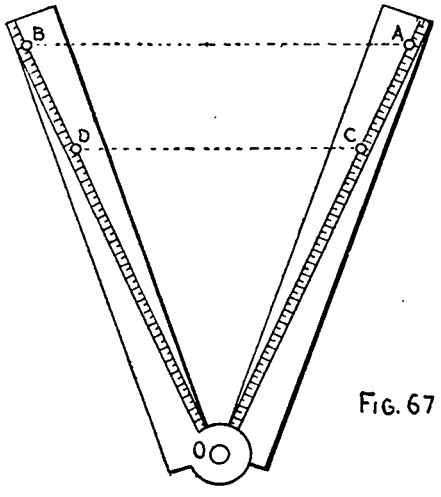

FIG. 67

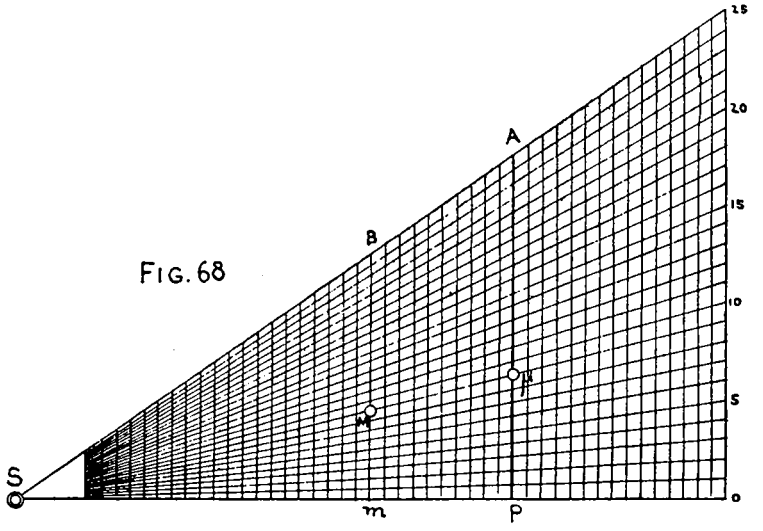

FIG. 68

where OC = focal length of the photograph, and open the arms of the sector until the second point of the dividers coincides with the corresponding division D of the other arm of the sector (OD being equal to OC = focal length), now add the length $d_1'P$, fig. 66 (horizontal distance of the platted point d_1 to the picture trace H_BH_B' projected into vertical plane), to the focal length $=f$ $= OC$, fig. 67, by placing one point of the dividers in C, when the other point may coincide with the division A of the scale OC. Hold the sector unchanged, turn the dividers about the point A, and bring the second point to the graduation mark B of scale OD, B corresponding to A, or $OB = OA$; when AB will represent the height H of the point d above the horizon plane of the station B, to be measured on the platting scale.

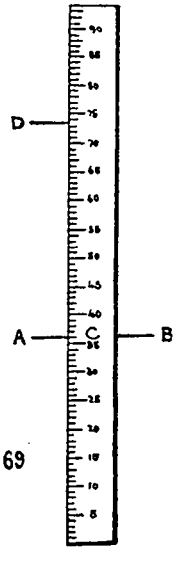

FIG. 69

(*i*) *Iconometric determination of elevations by means of the so-called "scale of heights."*—Another method consists in making use of the "scale of heights," fig. 68. Make $SP = f$ = focal length of the perspective, erect PA perpendicular to SP in P, and divide both lines into equal parts. Draw radials from S through the points of division on PA, and through those of SP draw parallels to PA. Now, with a pair of dividers take from the photograph the distance from the pictured point to the horizon line (the ordinate of the pictured point corresponding to $P(d'_b) = h$, in fig. 66) and transfer it to PA from $P = P\mu$. The position of μ may be found to correspond to the line $S\mu$, passing through the point 9 of the graduation on PA.

With a pair of dividers take now (from the platting sheet) the vertical distance from the horizontal projection of the point to the picture trace ($= \delta d_1$ in fig. 66) and transfer it to the right or left of P according as the point of the plan falls beyond the picture trace or between the platted station and the picture trace. In fig. 68 it is shown as falling between the station and the picture trace into m. The line mB, drawn parallel with PA, is intersected by the radial $S\mu$ (corresponding to scale division mark 9) in M. The distance mM, measured on the platting scale, will be the height of the point above (or below) the station.

A scale, fig. 69, is conveniently pinned somewhere, perpendicularly to a line AB, the division C of the scale, corresponding to AB, being the height of the camera station. One point of a pair of dividers with which the length AB was taken off the "sector," or with which the length mM

was taken off the "scale of heights," is set in C, fig. 69, and the division mark D of the scale, coinciding with the other point of the dividers, will indicate the height of the point above the plane of reference or datum plane.

This height is entered in pencil on the plan, inclosed in a small circle, to distinguish it from the number of the station. It is checked by means of a second photograph, and when the discrepancy between the two values for the elevation of the point is within the permissible limits of error, their mean value is entered in red ink on the plan and all pencil figures are erased.

Any marked difference in the value for the height of a point obtained from two photographs would indicate either that the two points selected on the photographs do not represent the same point of the terrene, or that an error in platting or in finding the height had been made. A third intersecting line from a third station would dispose of the first two alternatives, and a new measurement of the height will show whether an error had been made, or whether the discrepancy is due to unavoidable errors.

(*j*) *The use of the so-called "photograph board."*—The various constructions described in the preceding pages, if made directly on the platting sheet and on the photographs, would produce confusion in the iconometric platting, owing to the intricacy of the lines, and would obscure many details in the pictures. Captain Deville, therefore, has had a special drawing board prepared on which as many of the construction lines are drawn, once for all, as would have to be repeated for the different prints of uniform size and which had been obtained with the same camera.

This so-called "photograph board" is an ordinary drawing board, covered with tough drawing paper, the surface of which is to represent alternatively either the picture plane or the principal plane (both revolved into the horizon plane). It is used in conjunction with the photographs or negatives.

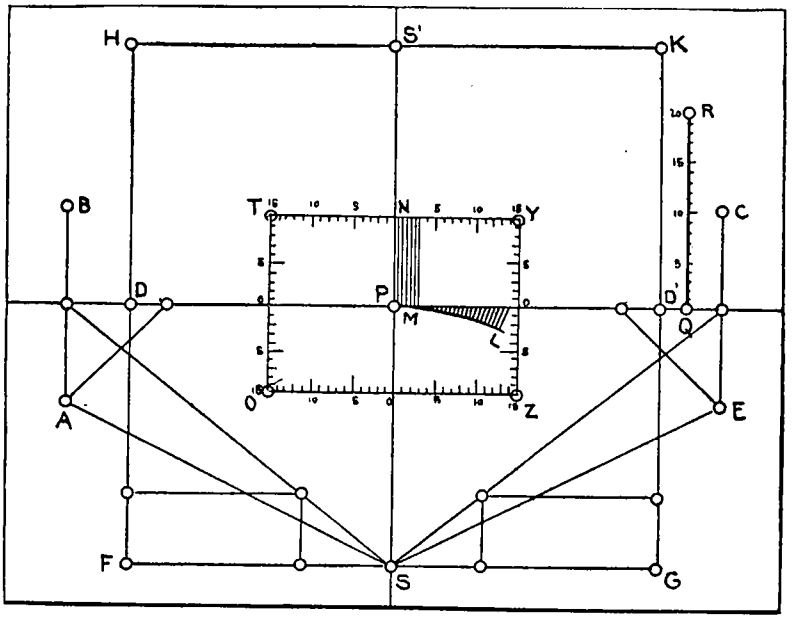

FIG. 70

Two lines, DD' and SS', fig. 70, are drawn at right angles to each other. They represent the horizon and principal lines, while $PD = PD' = PS' = f =$ focal length, so that D, D', S, and S' are the left, right, lower, and upper distance points, respectively.

The photograph is placed in the center of the board, the principal line coinciding with SS' and the horizon line with DD', in which position ($TYZO$) it is secured to the board by means of small thumb tacks or pins. The four scales, forming the sides of the square $OTYZ$, serve, among other purposes, to locate lines parallel either with SS' or DD' (without actually drawing the parallels) on the photograph, the latter falling within the limits of the square $OTYZ$. At a suitable distance from the distance point D' a perpendicular QR is drawn, on which are marked by means of a table of tangents the angles formed with DQ by lines drawn from D. This scale may be used for measuring the altitudes or azimuthal angles of points of the photograph, as will be explained in a separate paragraph later.

From S as a center with $SP = f =$ focal length an arc of a circle PL is described and divided into equal parts. Through these points of division, and between PL and PD', lines are drawn converging to S. Parallels MN to the principal line are also drawn, as shown in fig. 70. All these lines are used in connection with the scale of degrees and minutes QR.

The studs of the "centro lineads" (to be mentioned later) are fixed in A, B, C, and E, the lines AB and CE joining their centers, and those required for adjusting the centro lineads are drawn on the photograph board to be used as will be explained in a later paragraph. The square $FGKH$ is constructed on the four distance points S, S', D', and D.

(*k*) *Construction of the traces of a figure's plane.*—If one wishes to use a perspective instrument for converting a figure—situated in an inclined plane of which the perspective (photograph) is given—into the projection of the figure, into horizontal plan, it will be necessary to locate the traces of the figure's plane on the principal and picture planes.

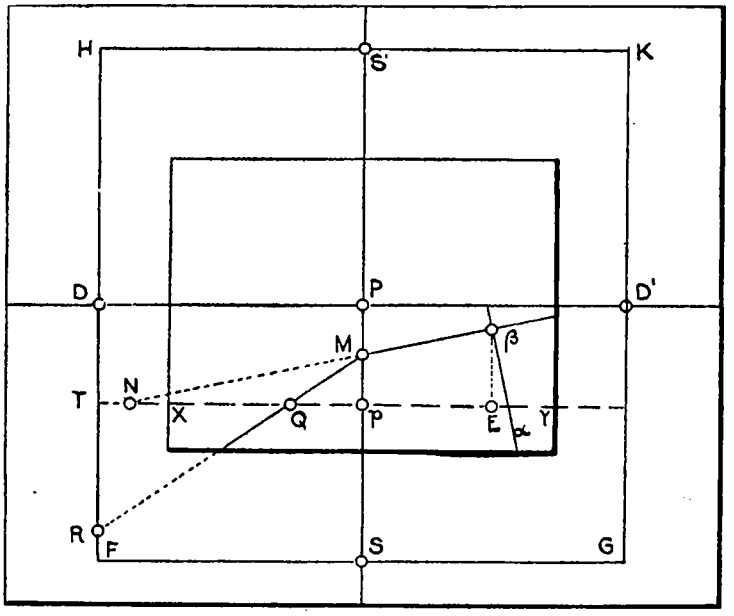

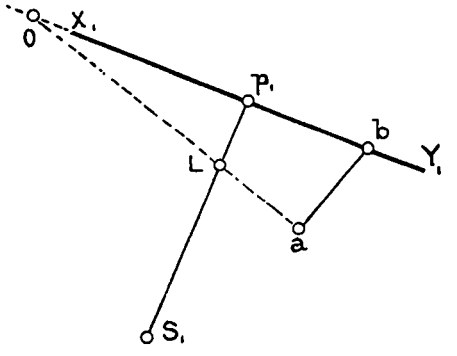

FIG. 71

We may distinguish between two cases that frequently arise in practical work.

(1) The inclined plane, containing the figure, may be given by the line of greatest slope, or,

(2) The inclined plane may be given by three or more points.

First case: The inclined plane containing the figure is given by its line of greatest slope; this may be an inclined road, the drainage line of a straight valley, the trend of a torrent, the surface of a live glacier, etc.

This line of greatest slope may be represented on the plan by a line ab, fig. 71, the altitude of a being known.

After the photograph has been pinned to the photograph board, the ground line XY is drawn, taking the horizontal plane through a as the ground plane.

On the platting board aO is drawn through a perpendicular to the horizontal projection ab of the line of greatest slope, and it is produced to its intersections L and O with the principal line S_1p_1 and with the picture trace X_1Y_1.

On the photograph pE is made equal to p_1b; at E a perpendicular to XY is erected and produced to the intersection β with the pictured line of greatest slope.

If we now make pN (on the photograph) $= p_1o$ (of the plan) and join $N\beta$ on the picture, the line $N\beta$ will represent the trace of the required plane (the figure's plane) on the picture plane.

If pQ (on the photograph) is made equal to p_1L (of the plan) and Q joined with M, MQ will represent the trace of the required plane in the principal plane, revolved about SS' (on the photograph board) into the picture plane, the station S falling in D.

Producing MQ to R, DR will represent the vertical distance of the station S above the plane $RM\beta$.

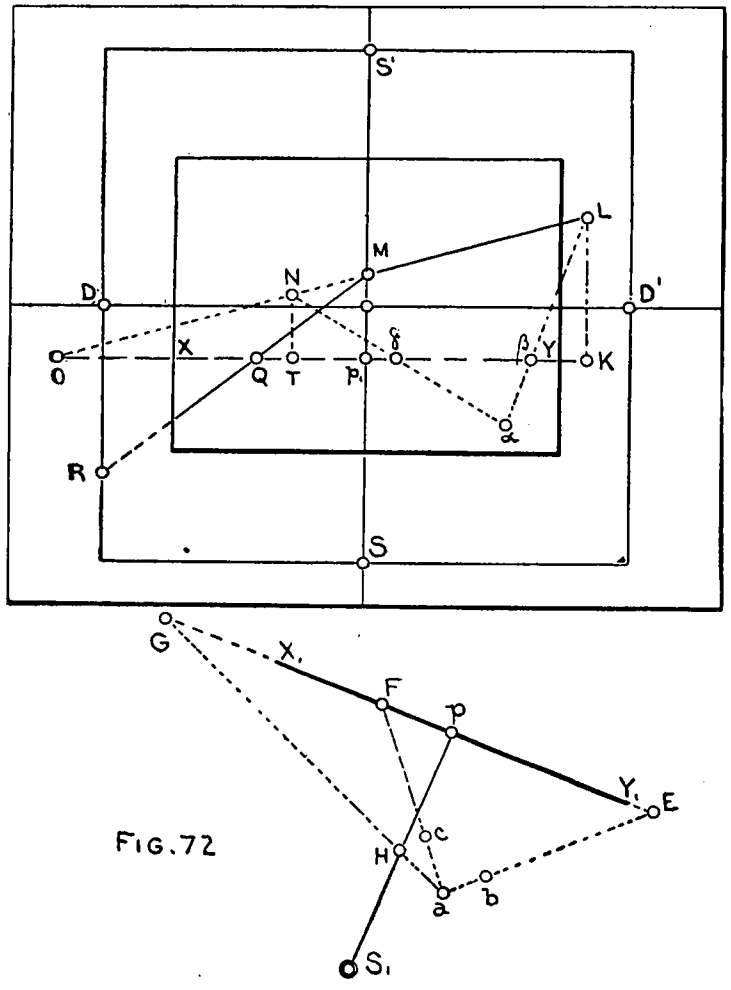

FIG. 72

Second case: The inclined plane containing the figure is given by three points.

Take for ground plane the horizontal plane containing one of the points a, fig. 72, and draw the ground line XY on the photograph. On the platting sheet join a to the two remaining points, b and c, and produce these lines ab and ac to the intersections E and F with the picture trace.

On the photograph make p_1K equal to pE and draw KL perpendicular to XY. Join the perspectives α and β of the points shown in a and b on the plan and produce to the intersection with KL. Make p_1T equal to pF, draw TN perpendicular to XY, and produce to the intersection N with the line joining the perspectives α and γ (of a and c). Join N and L, when NL will represent the trace of the required plane on the picture plane.

Produce LN to O and make $pG = p_1O$; join a and G and make $p_1Q = pH$. The line MQ will represent the trace of the required plane on the principal plane, revolved about SS' into the picture plane, the station S being now in D. Here again DR is the vertical distance of station S above the plane containing the three given points a, b, and c.

(*l*) *Contouring.*—After the heights of a sufficient number of points have been determined to give a good development of the terrene that is to be mapped, the contour lines are drawn in by interpolation between the points of which the elevations had been established.

In a moderately rolling country a limited number of points of known elevations will suffice to draw the contour lines with precision; but in a rocky region, where abrupt changes and irregular forms predominate, it is almost impossible to plat enough control points to enable the iconometric draftsman to render a faithful representation of the relief of the broken terrene, and it is here that a close study of the photographs will give the greatest assistance in modifying the courses of the contours to represent the characteristic features of the terrene.

The value of photographic views for a correct or naturalistic delineation of the topography of a given area is generally acknowledged by experienced topographers, even when using

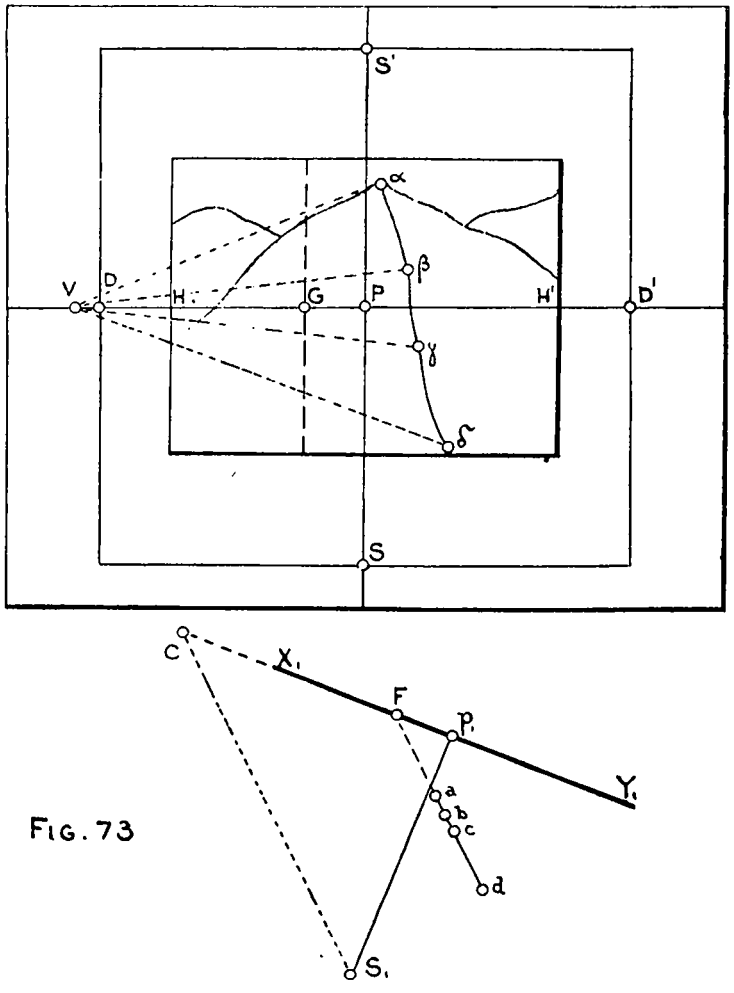

FIG. 73

instrumental methods alone for the control work, as a minute study of the pictured terrene (the photographs) will always aid the draftsman (when inking the topographic sheet) to draw the contours (of which the main deflections had been located instrumentally) with a more natural and artistic reproduction of nature's forms than could be attained by mechanically inking the penciled lines as obtained solely by instrumental measurements.

Instead of drawing the contour lines at once on the plan, the draftsman may begin by sketching them on the photographs, following the same rules for their location as if he were drawing them on the plan, for the image of every platted point is already marked on the photograph and its elevation may be taken from the working plan. By following this course he will be enabled to follow the inequalities of the surface very closely. Those perspectives of the contours

on the pictures will greatly facilitate their horizontal projections to be drawn upon the plan. They may also be transferred to the plan by means of the perspectograph or perspectometer if accuracy is to give place to rapidity.

A sufficient number of tertiary points having been platted by intersections, there will be no difficulty in drawing the contour lines (by interpolation) between such points. It may happen, however, that the number of the control points is too small and that the latter are too far apart to give a good definition of the terrene (as in a topographic reconnaissance), and then it will become necessary to resort to other (frequently less accurate) methods for locating the contours on the plan.

For example, the ridge $a\ b\ c\ d$ of a mountain range appearing as $\alpha\ \beta\ \gamma\ \delta$ on a photograph, fig. 73, may be divided by the contour planes by assuming it to be contained in a vertical plane.

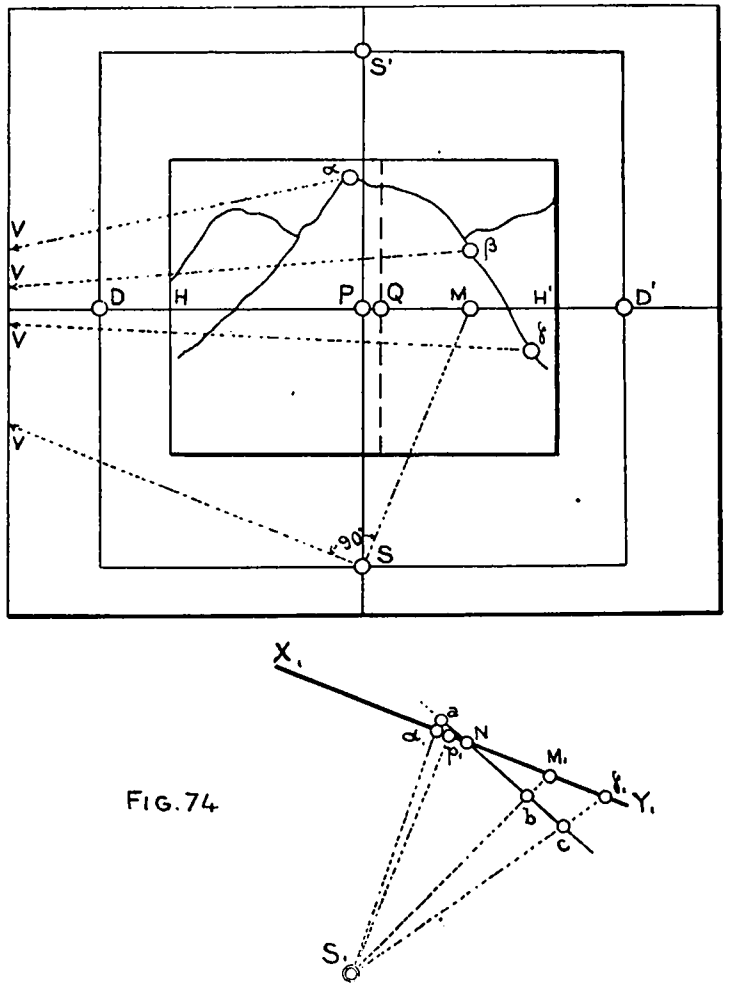

FIG. 74

On the plan, fig. 73, we produce the projection ad of the ridge to the intersection F with the picture trace $X_1 Y_1$ and draw through the projection S_1 of the station $S_1 C$ parallel to ad.

The photograph having been pinned to the photograph board, take from the principal point P on the horizon line $PV = p_1 C$ and $PG = p_1 F$. At G place the scale of equidistances perpendicular to the horizon line, the division at G corresponding to the height of the station, and join the marks of the scale to the vanishing point V.

Having now the successive points of intersection of the ridge by the successive contour planes, their distances from the principal line SS'—their abscissæ—are marked upon the edge of a strip of paper in the usual manner. The intersection of the radials from S_1 through the points marked on the paper strip with the projection $a\ .\ .\ d$ of the ridge $\alpha\ .\ .\ \gamma$ will give the intersections of the contour lines.

Should the mountain have rounded forms and no well-defined ridge, the visible outline on the photograph may be assumed to be contained in a vertical plane perpendicular to the line of direction drawn to the middle of the ridge outline.

The construction, fig. 74, is made by drawing the line of direction SM to the middle of the ridge outline and SV perpendicular to SM. On the plan $p_1 M_1$ is made $= PM$, and from the projection a of the summit α of the mountain a perpendicular ac to $S_1 M_1$ is drawn, which will represent the horizontal projection (ac) of the pictured outline ($\alpha\gamma$); it is produced to the intersection N with the picture trace $X_1 Y_1$. PQ is taken (on the photograph) equal to $p_1 N$ (on the plan), and the scale of equidistances is placed at Q perpendicular to the horizon line DD'. The division mark at Q corresponds with the elevation of the station S, and the points of division corresponding with the contours are joined to V and produced to their intersections with the outline α . . . γ. The platting is done as in the preceding case, or the lines of direction drawn to the points of intersection of the outline $\alpha\gamma$ by the contour planes may simply be platted and the contour lines on the plan may be drawn tangent to these lines of direction.

The horizon line, containing the perspectives of all points having the same elevation as the station, represents the perspective of a contour line when the camera horizon is identical with a contour plane. The iconometric draftsman should pay particular attention to geologic forms and to the origin of topographic features, as without such applied knowledge a correct interpretation of such forms and their cartographic representation would require the cartographic location of a vast number of control points to obtain a faithful representation of the terrene forms. Although the latter may often result from the successive or combined actions of many agencies, they will yet have similar recurrent characteristic shapes when produced by the same causes, and the contours, being the means for delineating the cartographic representation of the terrene shaped by identical agencies, should also show a corresponding characteristic similarity.

Fig. 75

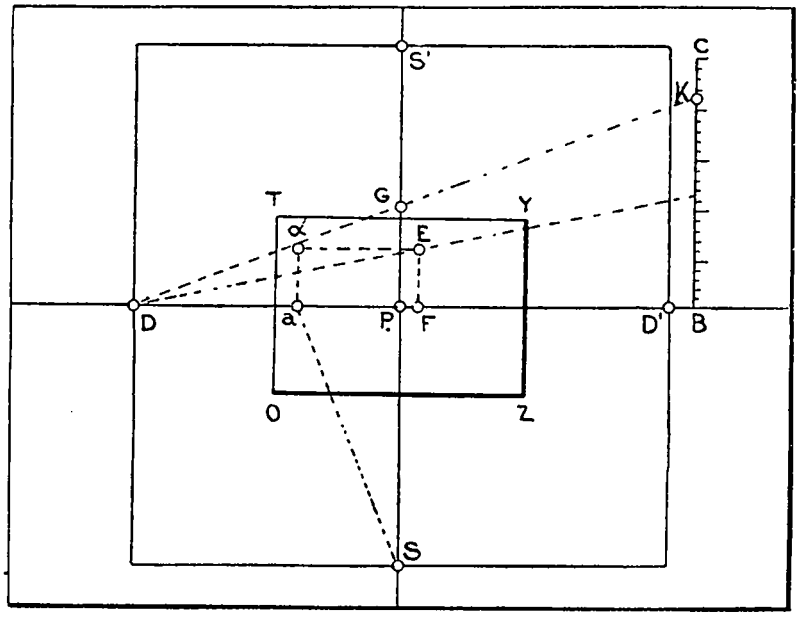

(*m*) *The photograph protractor.*—The angle included between the line of direction (to a point of a photograph) and the horizon, or the principal plane—the vertical or altitude and the horizontal or azimuth angle—is sometimes wanted.

The horizontal angle may be obtained directly on the photograph board by joining the station S, fig. 75, and the projection a (on the horizon line) of the pictured point α. If required in arc measure, the distance Pa may be transferred to the principal line SS' from $P = PG$; D is joined to G and produced to the scale of degrees and minutes BC, where the graduation mark k indicates the value of the horizontal angle in arc measure.

When many such angles are to be measured, the horizontal scales TY and OZ, fig. 75, may be divided into degrees and minutes by means of a table of tangents, using as radius the focal length SP.

The altitude is the vertical angle at S of the right-angle triangle, having for sides Sa and $a\alpha$. To construct it, take $DF = Sa$, draw FE parallel with and equal to $a\alpha$, join D and E, and produce DE to the scale BC of degrees and minutes.

This construction will be facilitated by the lines already drawn on the photograph board, fig. 70. With a pair of dividers take the distance (abscissa) from the pictured point α to the

principal line SS', fig. 75, and carry it from P, fig. 70, in the direction PD', and from the point so obtained take the distance to the arc ML, fig. 70, measuring in the direction of the radials marked on the board, which will represent the distance PF, fig. 75. Then, with the dividers, carry $a\alpha$ to FE, fig. 75, which is that one of the parallel lines MN of fig. 70 that corresponds to the point F. The construction may now be completed in the manner already explained.

A protractor may be constructed to measure these angles directly by drawing lines on a transparent plate parallel with the principal line—they contain points having identical azimuths—and curves containing points of identical altitudes.

The azimuthal lines may be found by platting the horizontal angles in S, fig. 70, and drawing lines parallel to the principal line SS' through the points of intersection of the radials with the horizon line DD'.

If we regard the horizon and principal lines as axes of coordinates and denote the altitude αa of a point a pictured as α, fig. 75, by h, the equation of the curve of altitude h may be written—

$$y^2 = (x^2 + f^2) \tan^2 h.$$

This also is the equation of an hyperbola of which the principal and horizon lines are the transverse and conjugate axes, and of which the principal point is the center.

One of the hyperbola's branches represents the points above the horizon, and the other branch the points of equal altitude below the horizon. The asymptotes are lines intersecting each other at the principal point, and including angles with the horizon line equal to h. This hyperbola represents the trace on the picture plane of the cone of visual rays which include the angle h with the horizon plane.

These hyperbolic curves of equal altitude may be obtained by computation, using the preceding formula and substituting different values for h, or they may be obtained graphically by platting a series of points for each curve by reversing the construction given above for finding the altitude of the pictured point α, fig. 75. The angular distance between the lines representing points of equal azimuths (or those of equal altitudes) will depend upon the degree of precision required.

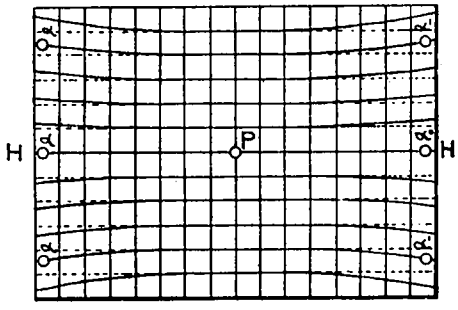

FIG. 76

The complete protractor is shown in fig. 76. It may be made in the same manner as mentioned for the perspectometer by drawing it on paper on a large scale, reducing it by photography, and making a transparency by bleaching in bichloride of mercury.

(4) *Method of V. Legros for determining the position of the horizon line.*—Commandant V. Legros recommends the use of these hyperbolas for locating the horizon line of a vertically exposed photographic plate:

When a camera with the photographic plate adjusted in vertical plane is rotated horizontally in azimuth, the plate remaining vertical, any point α, fig. 76, will describe a hyperbola $\alpha\alpha'$ on the ground glass plate. The nearer the observed point α approaches the horizon line the smaller the curvature of its hyperbolic trace on the ground glass will become, and a point a^0 which traverses the ground glass plate in a straight line HH' will have the same elevation as the second nodal point of the camera lens. Its angle of elevation will be ± 0 or HH' will be the horizon line of the plate. To locate the horizon line experimentally in this way the ground glass plate is best provided with a series of equidistant horizontal and vertical lines, after the manner of Dr. Le Bon's ground glass plates.

(5) *Method of Prof. S. Finsterwalder for locating contours on the plan.*—Prof. S. Finsterwalder's method for the iconometric location of horizontal contours is based upon the following consideration:

The pictured outline of a terrene form is regarded as the trace of the terrene surface in a plane vertical to the platting or ground plane and containing the pictured outline. This method is well adapted for the development of the terrene forms of a moderately rolling country.

The camera stations are specially selected with reference to the use of this method, with a

view toward obtaining pictures with a sufficient number of such outlines of the terrene forms to enable the iconometric draftsman to give a good definition of the relief of the region to be platted.

The pictured outlines of terrene forms may be regarded as falling within vertical planes, and the rays from the point of view—second nodal point of camera lens—to the pictured points of such outline will form a cone with apex in the point of view, its base being formed by the pictured outline.

Any horizontal plane containing a contour A will intersect such a cone of rays in a curve B, the latter touching A in one point. This curve B may be platted on the working sheet by laying off, upon a few rays from the platted station to points of the pictured outline, the distance:

$$h \cot \beta$$

and the points thus located on the radials from the station point, if connected by a continuous line, will represent the curve B platted in horizontal plan.

h=difference in elevation between the station (whence the picture was taken) and the horizontal contour A.

β=vertical angle to each point of the outline bisected by the vertical plane passing through its radial or visual ray.

The direction of the pictured outline is now platted on the plan, and where it bisects the curve B will be a point of the contour A. As we naturally would draw not only one curve B, but rather a series of them corresponding to several horizontal planes, passing through a series of contours A of various elevations, the construction may be simplified, inasmuch as the curves B—being lines of intersection of the same cone of rays with a series of parallel (horizontal contour planes) planes—will all be similar in shape, their corresponding points (points on the same radials) having the same relative positions with reference to the platted station, the value $h \cot \beta$ need only be determined for one point of the other curves B if one curve B had been drawn, the others being parallel with the first.

CHAPTER IV.

PHOTOGRAMMETERS.

The practical *value of a photogrammeter* (photographic surveying instrument) depends greatly upon the quality and general uniformity of its lens or lenses, upon the rigidity of the component parts of the apparatus, its easy transportability, and on the rapidity with which it may be put into adjustment.

A good *phototopographic lens* should be free from spherical aberration (or diffusion of the light rays); it should possess no chromatic aberration, nor should the image show distortion of any kind, and the field of view (the range of lens) should be large, rapidity of the lens being desirable, but less important than the other requirements just mentioned.

The *principal lenses in use* for phototopographic purposes are: *Dallmeyer's* rapid rectilinear, *Steinheil's* aplanat, *Bush's* pantoscopic, *Görz's* double anastigmat, and, more recently, *Zeiss's* anastigmat lens.

The nodal points, the focal length, arc of visibility, and the arc which is perfectly free from distortion of every kind should be known for every lens used for phototopographic purposes, and the manufacturers of all good lenses are best fitted to determine those values with great precision for every lens.

I. REQUIREMENTS TO BE FULFILLED BY A TOPOGRAPHIC SURVEYING CAMERA.

A good surveying camera or photogrammeter for topographic work should produce negatives which are geometrically true perspectives the elements of which should be known, and the following desiderata should be fulfilled:

First. The plates to be exposed should be adjustable into vertical plane.

Second. The distance between image point and sensitive plate should be maintained unchanged for all plates.

Third. This distance—the constant focal length—should be known or will have to be determined for every instrument.

Fourth. Means should be provided to trace or locate the horizon line upon every negative or print.

Fifth. Means should be provided for locating the principal point upon every negative.

Sixth. A ready orientation of the photographs (the picture traces) for iconometric platting should be provided for; and we may add as

Seventh. Enough characteristic stations (besides the triangulation points needed for the instrumental control) are to be occupied with the surveying camera to give a full development of the terrene, which is to be mapped.

Until recently photographic surveying instruments were not procurable in open market. Nearly every observer who made practical application of the photographic methods for topographic surveys had an apparatus constructed for his particular need and according to his individual ideas.

In the following we will describe such photogrammeters as may be regarded as special types, constructed to fulfill different requirements.

II. ORDINARY CAMERAS ADAPTED FOR SURVEYING PURPOSES.

These cameras are generally supported by three leveling screws, and they are provided with a circular level, or with two cross levels, for adjusting the sensitive plate into vertical plane. The distance between lens and sensitive plate (focal distance) may be made invariable by means of

two rods *Sp*, fig. 77 (*Werner's* apparatus, made by R. Lechner, of Vienna, in Austria), or by means of two arms *H* and clamp screw *M*, after the bellows had been extended by aid of the pinion *K* and rack movement to that point indicated by the vernier *n*, fig. 78, as the proper focal length for

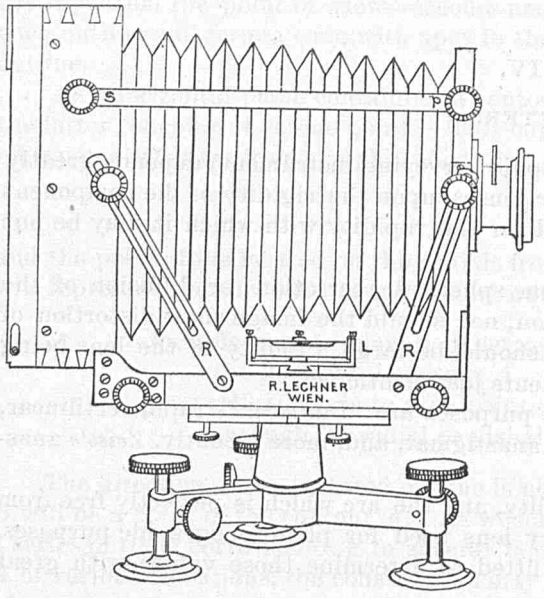

FIG. 77

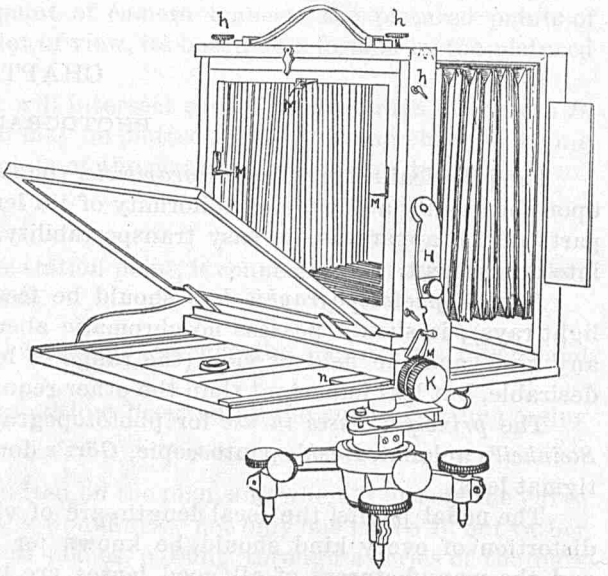

FIG. 78

infinite distance. The arrangement shown in fig. 78, represents the apparatus of Dr. *Vogel* and Professor *Doergens*, made by Stegemann, of Berlin, in Prussia.

Dr. *G. Le Bon* also used a similarly modified camera for his archæological researches in India (undertaken under the auspices of the French ministry of culture).

Short brass points *M*, fig. 79, serve to locate the horizon and principal lines on the negatives by protecting the sensitive plates against the action of those light rays which they intercept. In some instances those points *M* may be brought into direct contact with the sensitive film surface of the plate by turning a button,

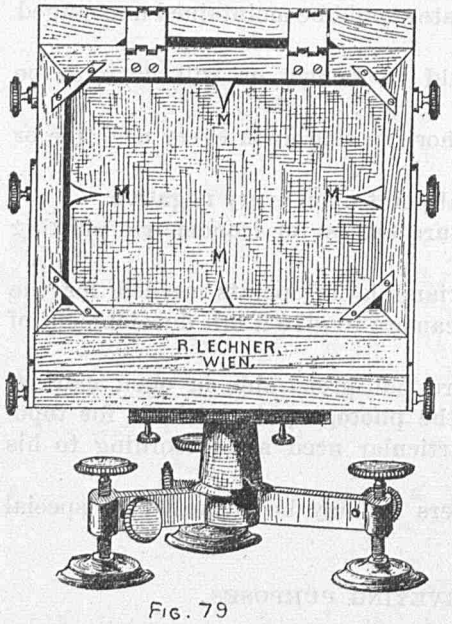

FIG. 79

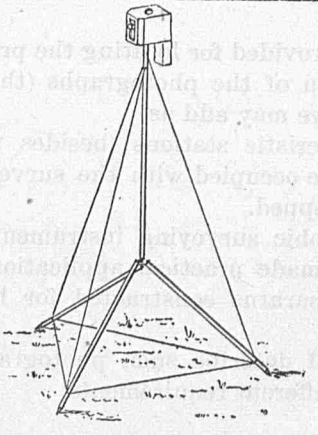

FIG. 80

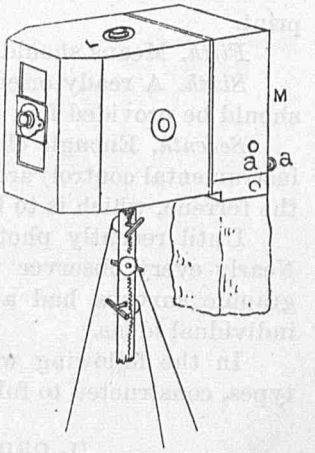

FIG. 81

thus producing a sharp, well-defined image of the outlines of the teeth on the negative.

The use of such modified cameras should not be extended beyond preliminary work; for extensive use the results will not be sufficiently uniform and accurate.

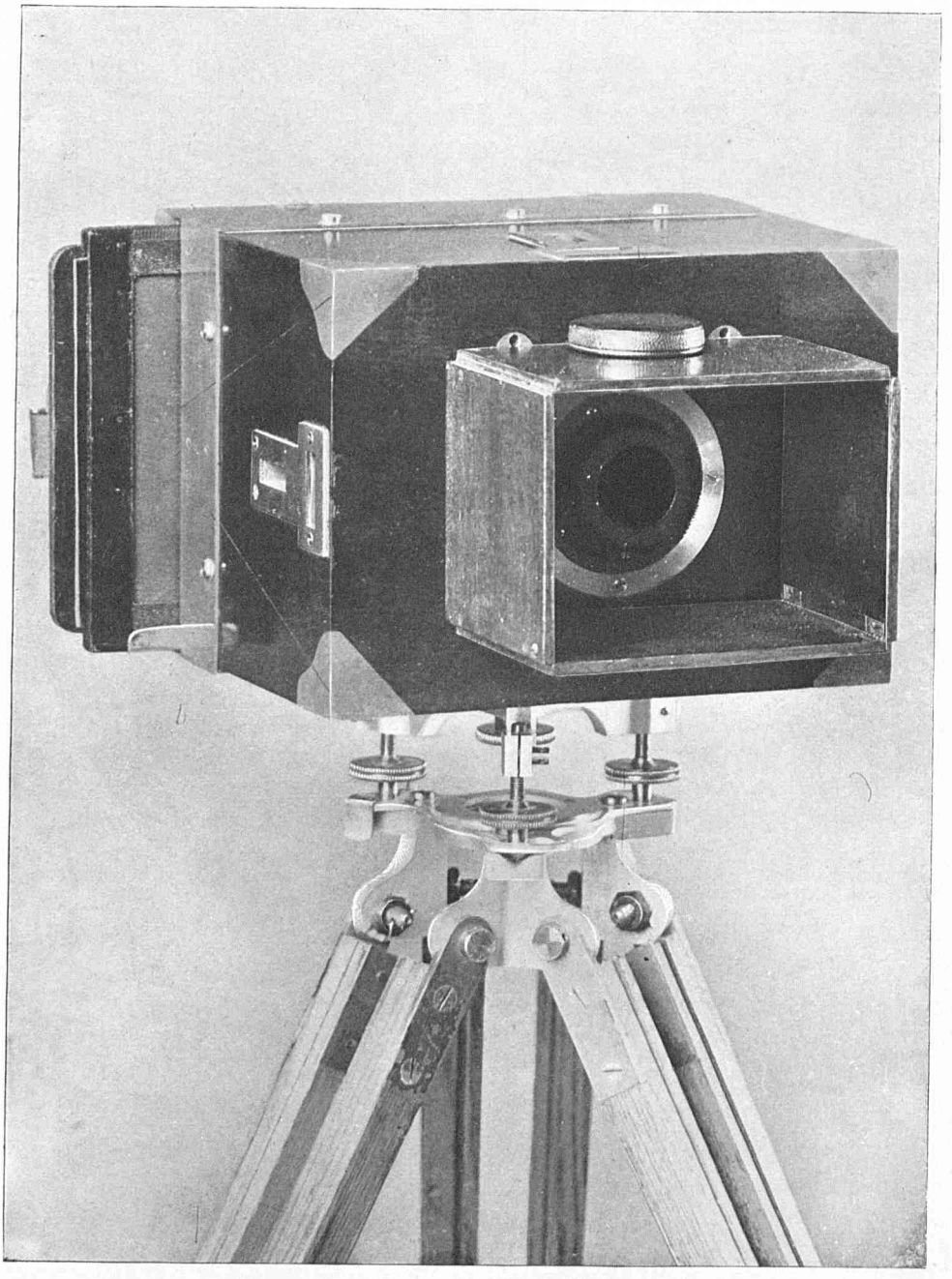

CANADIAN (E. DEVILLE'S) SURVEYING CAMERA.

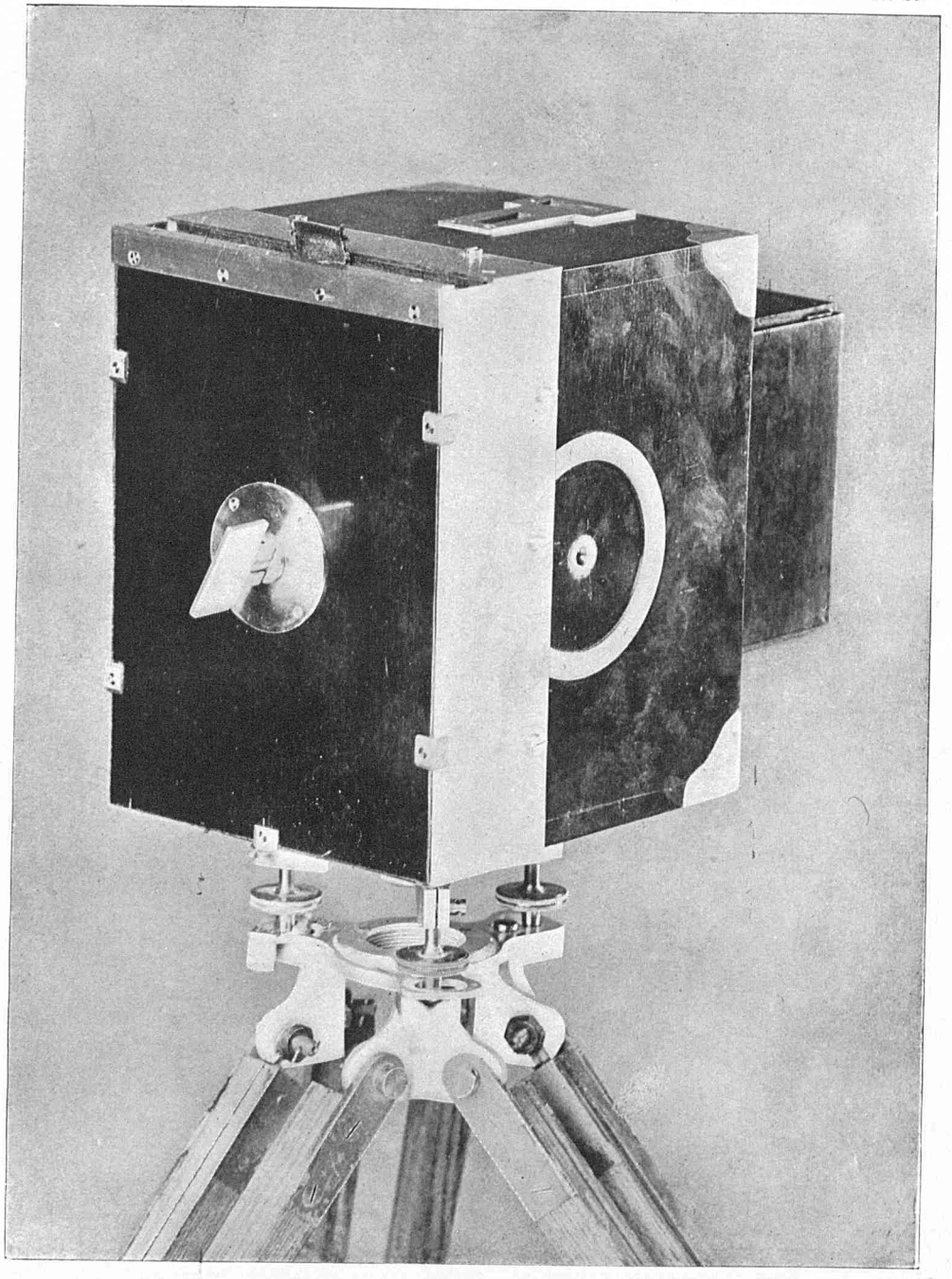

CANADIAN (E. DEVILLE'S) SURVEYING CAMERA—VERTICAL POSITION.

III. SPECIAL SURVEYING CAMERAS WITH CONSTANT FOCAL LENGTHS.

(*1*) *Dr. A. Meydenbaur's surveying camera.*—Among the numerous patterns of this class of instruments Dr. Meydenbaur's is probably the earliest form. Fig. 80 shows *Meydenbaur's new, small-sized magazine camera.* The plates are successively pressed against a metal frame secured at a constant distance from the lens. After an exposure the plate is dropped into a leather sack *b*, fig. 81, attached to the camera. The dimensions of the camera box are 9 by 12 centimetres, it weighs 750 grammes, and it is mounted on a rod which is joined at its lower end to three short legs in such a way that the four pieces may be folded together to form a stout cane 0·85 metre long. The lower ends of the three legs of this tripod, and the upper end of the supporting rod are connected by twisted violin strings to which tension may be given by turning the ratchet wheels indicated in fig. 81. The leather pouch, together with twelve plates, weigh about 500 grammes.

The sensitive plate may be adjusted into vertical plane by means of a ball and socket connec-

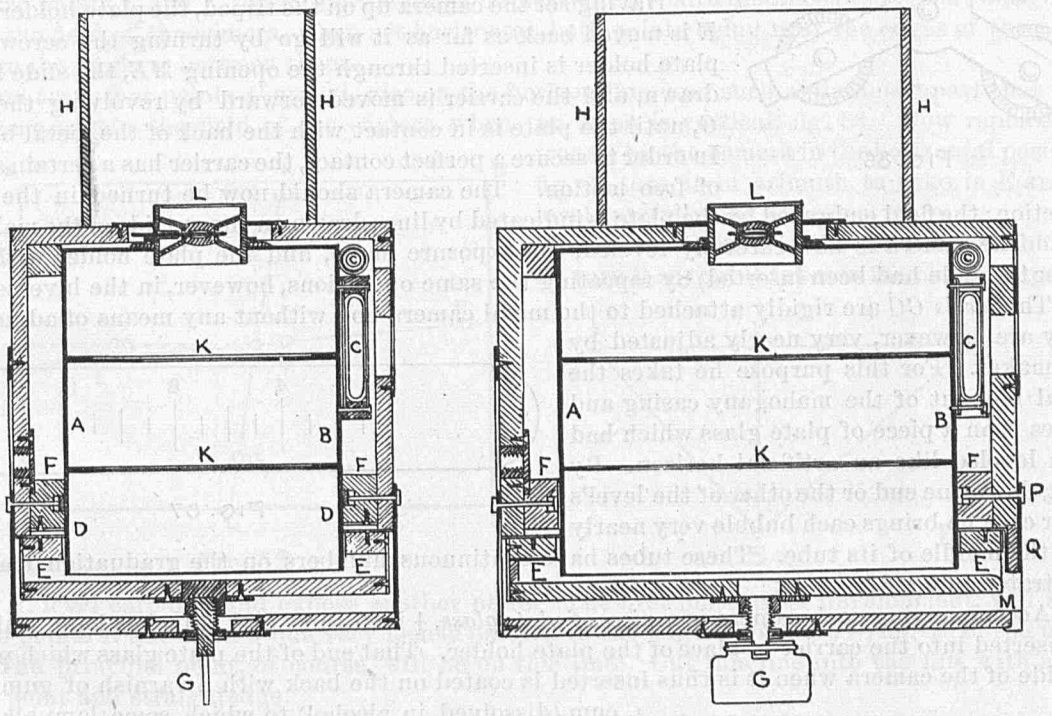

FIG.85

tion between the camera and upper end of the tripod rod, together with the circular level *L*, shown on the upper face of the camera box in fig. 81.

(*2*) *E. Deville's new surveying camera.*—The following description of the new Canadian surveying camera is taken from *Deville's Photographic Surveying*, Ottawa, 1895. This camera is shown in figs. 82 and 83. Figs. 84 and 85 represent sections of the instrument.

The camera proper is a rectangular metal box *AB* (figs. 84 and 85) open at one end. It carries the lens *L* and two sets of cross-levels *CC*, which may be observed through openings in the outer mahogany box. The metal box is supported by wooden blocks and a frame *FF*, held in position by two bolts *DD*.

The plate holder is made for single plates; it is inserted into the carrier *EE*, which may be moved forward and backward by turning the screw *G*.

A *folding shade HH*, hooked to the front of the camera, and *diaphragms KK*, inside of the metal box, intercept all light that does not contribute to the formation of the image on the photographic plate.

The camera rests on a *metal triangular base*, fig. 86, with three-foot screws, exactly like the base of the transit which is used in conjunction with Deville's camera, so that either camera or transit may be placed on the same tripod at any time. The camera may be set up with the longer side either horizontal or vertical, figs. 82 and 83. Both transit and tripod are carried by the surveyor, while one camera with one dozen plates (in the single plate holders), without a tripod, are taken by one of the men who always accompany the surveyor. The assistant surveyor has a second camera, with 12 plates and a separate tripod.

The legs of these *tripods*, when folded together, are 20 inches long and are placed under the box of the transit, in a separate sole-leather case, to be carried on the back of the surveyor. The tripod of the assistant surveyor's camera is similarly attached to the sole-leather case of his camera.

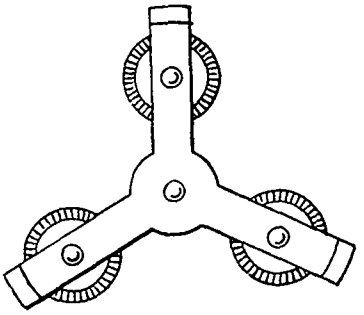

FIG. 86

The lens of this camera is a Zeiss anastigmat, No. 3 of series V, focal length = 141 millimetres with a deep-orange color screen in front.

Having set the camera up on the tripod, the plate-holder carrier E is moved back as far as it will go by turning the screw G, the plate holder is inserted through the opening ME, the slide is withdrawn, and the carrier is moved forward by revolving the screw G, until the plate is in contact with the back of the metal box AB. In order to secure a perfect contact, the carrier has a certain amount of free motion. The camera should now be turned in the proper direction; the field embraced by the plate is indicated by lines drawn on the outside of the mahogany box. The camera is now carefully leveled, the exposure made, and the plate holder withdrawn (after the slide had been inserted) by repeating the same operations, however, in the inverse order.

The *levels CC* are rigidly attached to the metal camera box without any means of adjustment. They are, however, very nearly adjusted by the maker. For this purpose he takes the metal box out of the mahogany casing and places it on a piece of plate glass which had been leveled like an artificial horizon. By filing down one end or the other of the level's outer case he brings each bubble very nearly into the middle of its tube. These tubes have continuous numbers on the graduation marks, as illustrated in fig. 87.

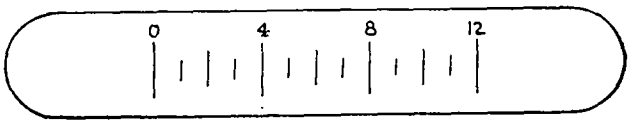

FIG. 87

Accompanying each camera is a *piece of plate glass*, $\frac{1}{4}$ inch thick and 11 inches long, which can be inserted into the carrier in place of the plate holder. That end of the plate glass which projects outside of the camera when it is thus inserted is coated on the back with a varnish of gum guaiacum (dissolved in alcohol) to which some lampblack has been added. This coating has very nearly the same refractive index as glass, precluding all reflections from the back of the plate glass.

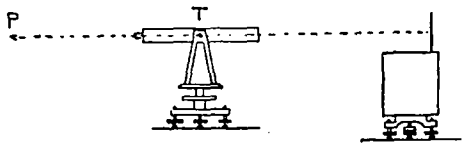

FIG. 88

When the camera is received from the maker *the exact readings of the levels*, CC, when the back of the metal box (against which the photographic plate is pressed) is vertical, *should be ascertained*. To do this the bolts P, fig. 85, next to the opening M, are unscrewed and removed. Q may then slide backwards and be taken out. The piece of coated plate glass is now inserted into the carrier E, figs. 84 and 85, and pressed into contact with the metal box by revolving the screw G. The camera is placed on its tripod and leveled. Immediately in front and at the same height as the camera a transit (or a leveling instrument) T, fig. 88, is set up, and, after carefully adjusting it, a distant but well-defined point P is selected on the same level with the transit and camera. The intersection of the threads of the telescope is brought to coincide with P, and the telescope is clamped in this position to the vertical circle. Turning it in azimuth the image of P, reflected by the plate glass, should appear at the intersection of the telescope's threads. If it does, the face of the plate glass is vertical and the position of the bubble in the tube of the level, directed

at right angles to the plate glass, is the correct one for adjusting the instrument in the future. If it does not, the camera must be tilted forward or backward by means of the foot screws until coincidence is established. The bubble of the level may or may not now be in the middle of the tube, but its position, whatever it is, will be the correct one for the future when adjusting the camera at any station. This level reading should therefore be recorded, and whenever the camera is to be leveled in its subsequent use it must be remembered that the bubble is to be given the same position.

This level reading determination is to be made for the two positions of the camera in which it is used, figs. 82 and 83, horizontal and vertical.

The next step is to *locate the position of the principal point* on the vertical photographic plate, and *to determine the length of the distance line or the constant focal length.*

Select a station so that a number of distant and well-defined points may be found on the horizon line, as laid down by the maker of the camera. The view selected may be the distant shore of a lake, a large building, or a row of buildings. Set up the tripod and adjust the transit. Find two points *E* and *F*, fig. 89, on the horizon line (with a zenith distance of 90°) that both come within the field of the camera, when set horizontal, both points being near the edges of the plate. Measure the angle ω between them.

Find two other points *G* and *H*, also on the horizon line, and such a distance apart that they both come within the field of the camera when the same is vertical, fig. 83. Now replace the transit by the camera in the horizontal position, fig. 82, turn it in azimuth to take in *E* and *F*, level carefully and expose a plate.

Set the camera in the vertical position, fig. 83, turn it so that it takes in the observed points

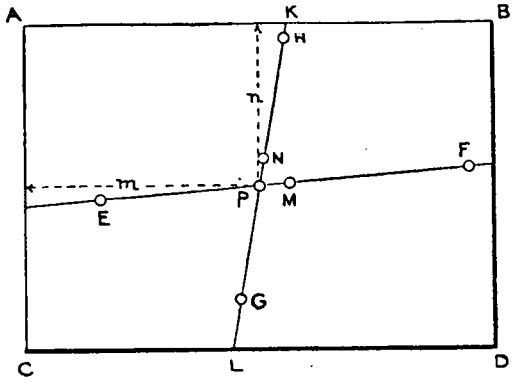

FIG. 89

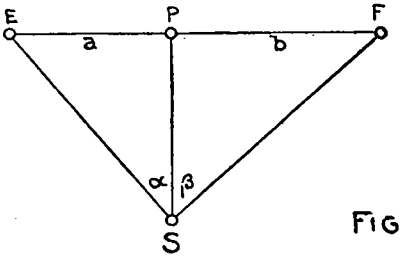

FIG. 90

G and *H*, level carefully and expose another plate. The first plate, after development, will show the two points *E* and *F* on a line very nearly parallel to the edges *AB* and *CD*, fig. 89, of the metal box. The principal point, of course, will be on this line. Cut this line into the film with a fine needle point and straightedge.

The second plate, exposed in the vertical position, after development gives another horizon line *GH*, fig. 89, which may be transferred to the first plate by means of the distances *AK*, and *CL* to the corners of the metal box. This (principal) line is likewise cut through the film with a fine needle point and straightedge, the principal point *P* is at the intersection of both lines *EF* and *GH*.

The length of the distance line, $SP = f$, fig. 90, may be computed from the observed horizontal angle ω, included between *SE* and *SF*, and from the distances $EP = a$ and $PF = b$, measured on the negative.

Let *S*, fig. 90, be the second nodal point of the camera lens, α and β the angles *ESP* and *PSF*.

$$\alpha + \beta = \omega.$$

The lengths of *a* and *b* are known and if we designate the focal length *SP* by *f*, we will have:

$$\tan \alpha = \frac{a}{f}$$

$$\tan \beta = \frac{b}{f}$$

$$\tan \alpha \, X \tan \beta = \frac{a\,b}{f^2}$$

Hence:

$$\tan(\alpha+\beta)=\tan\omega=\frac{\frac{a}{f}+\frac{b}{f}}{1-\frac{ab}{f^2}},\text{ or:}$$

$$f^2=\frac{a+b}{\tan\omega}f-ab=0$$

after resolving this quadratic equation we find:

$$f=\frac{a+b}{2\tan\omega}+\sqrt{\frac{(a+b)^2}{4\tan^2\omega}+ab}$$

Having found the focal length and the principal point, reference marks are to be made on the edges of the metal box to indicate the horizon line, the principal line, and the focal length on the negatives, or on the enlargements made from the latter.

Measure the distance m, fig. 89, from P to AC. From the corresponding corners A and C, fig. 91, of the metal box, lay off m on AR and CT. With a very fine and sharp file held in the direction of the lens, cut into the edge of the metal a clean and sharp notch at T and another at R.

Repeat the same operation at the corners A and B, fig. 91, with the distance n from P to AB, fig. 89.

The lines OQ and RT will be the horizon and principal lines of the negatives when the camera is leveled to bring the bubble into its proper position, as has been mentioned in the foregoing.

From R and T, fig. 91, lay off the distances Rr, Rr', Tt, $Tt'=\frac{f}{2}=$ one-half of the constant focal length.

From O and Q measure Oo, Oo', Qq, $Qq'=\frac{f}{4}=$ one-fourth of the focal length, and at each one of these points make a notch with the file held in the direction of the lens.

Every photograph will now show twelve triangular projections into the dark border of the

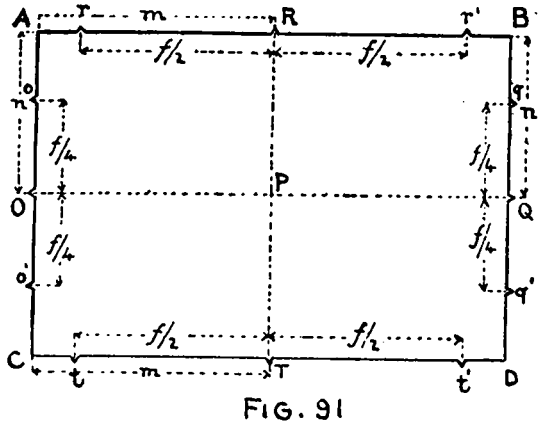

FIG. 91

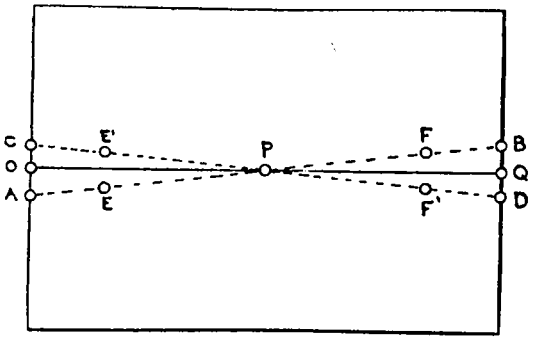

FIG. 92

photograph. Four of these projections serve to fix the horizon and principal lines; the remaining eight give the focal length value.

It now remains necessary *to find the correct readings of the transverse levels* (those placed parallel with the sensitive plate), when the horizon and principal lines pass exactly through their notches of the metal box.

Again set up the camera facing the same distant view as before, but in adjusting it bring the bubble of the transverse level near one end of the tube, note the level reading and expose a plate. After development it will give an horizon line EF, fig. 92, cutting the border of the negative in A and B at some distance from the pictured notches O and Q. Now change the adjustment of the camera by bringing the bubble of the transverse level to the other end of the tube, note the level reading and expose another plate. This will give another horizon line $E'F'$, cutting the border of the negative in C and D.

Great care should be exercised in both cases to maintain the other level (the one at right angles to the sensitive plate) at its proper reading in order to expose both plates in vertical plan.

After measuring *CO* and *OA* or *BQ* and *QD*, a simple proportion will give the proper reading of the transverse level, which will bring the horizon line of the vertically exposed plate through the two notches *O* and *Q* of the metal box.

The correct reading of the other transverse level is found by the same method, with the camera in the vertical position, fig. 83.

All these operations must be executed with great care and precision, and with the help of a microscope of moderate power, as the subsequent iconometric platting of pictured points is based upon the determination of the ordinates and abscissæ of such points on the photographs, with reference to the principal and horizon lines, as a system of rectangular coordinates.

It had been assumed that the levels were placed very nearly in correct adjustment by the maker, as previously mentioned. If found too much out, they should of course be first approximately adjusted by setting the metal box on a leveled plate. For this purpose the plate glass sent out with every instrument is set on the camera base and leveled like an artificial horizon.

(*3*) *Use of the instruments comprised in the Canadian phototopographic outfit.*—The instruments and tripod being made as light as possible, steadiness is secured by a net suspended between the tripod legs in which a heavy stone is placed. With this device better photographs and more precise observations are obtained, and there is no risk of the instruments (resting upon the tripod) being blown over during one of the sudden and strong gusts of wind so frequently encountered on elevated peaks in the mountains.

After having arrived at a triangulation station, the surveyor adjusts the transit and observes the azimuth and zenith distances of all signals marking the triangulation and camera stations that may be visible from his position. If accompanied by his assistant, each reads one vernier and both enter the readings in record books. After completion of the observations they compare notes. Any discrepancy that may be discovered in the recorded data is corrected on the spot.

The camera is carried in a sole-leather case containing also twelve filled plate holders. When more plates are needed they (with the necessary holders) must be carried in a separate receptacle. Taking the camera out of the case, the leveling base, fig. 86, is screwed to it, and the camera is then placed upon the tripod, from which the transit had been removed, without disturbing the position of the tripod; the shade or hood is now unfolded and attached to the hooks at the front of the camera, fig. 82. A plate holder is inserted into the carrier, and its number is recorded upon a rough outline sketch of the view commanded by the field of the camera image, entering also such notes as may be of value for the development of the plate and for the iconometric platting of the topography recorded upon it (by the action of the light). Having made sure that the cap is on the lens, the slide is withdrawn from the plate holder and the plate is brought into contact with the frame of the metal box by turning the screw *G*, figs. 84 and 85, devised for this purpose. The surveyor now turns the camera in azimuth until the lines on the upper face of the wooden casing show that it is properly directed or oriented to include the panorama section to be photographed between the lines, the field of view coinciding with the outline sketch bearing the number of the plate holder in the camera. Sighting along the converging lines, shown on the side-face of the wooden camera casing, he can assure himself whether the view on the image plate reaches high or low enough. If it does not, he will put the longer dimension of the camera upright, unless the camera was already in that position. He levels carefully, in the manner previously described, and exposes the plate. Whenever the sun shines inside of the front hood it should be shaded off during the exposure of the plate by holding something above the hood. Under no circumstances should the sun be permitted to shine upon the lens.

Every evening, after returning to the survey camp, the surveyor replaces the exposed plates in his dark tent by new ones, using a ruby-colored light. He also marks the exposed plates in one corner, before removal from the holder, with his initials, the number of the dozen and of the plate (the same number as given to the corresponding outline sketch), using a soft lead pencil for this purpose; e. g., IV, 5, means plate No. 5 of the fourth dozen, or the forty-first plate. The exposed plates are now placed into a double tin box, fig. 93, which can be closed hermetically, and which will float when filled with two dozen plates, should the same be accidentally thrown into

water. These boxes are shipped to the head office in Ottawa, where the plates are developed by a specialist.

The data obtained with the aid of the transit for triangulation purposes are recorded in the field book in the usual manner, as customary for such work.

The horizontal angles observed with the transit (or altazimuth instrument) to the points of the terrene marked on the outline sketch which accompanies each negative, serve not only for the orientation of the horizontal projection of the plate on the plan (the so-called "picture trace"), but they also serve to counteract in a measure and to ascertain the distortion of the paper prints (or photographic enlargements). The vertical angles, together with the platted distances, are used to check and verify the position of the horizon line on the different photographs.

The most important camera stations are occupied by the surveyor; the secondary stations by the assistant surveyor, with his own camera. No trigonometric observations are made by the assistant while occupying the secondary stations.

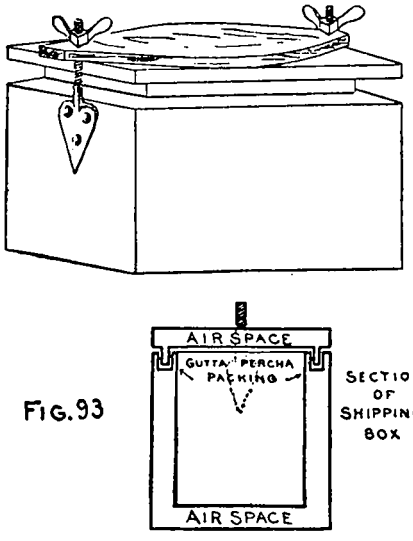

FIG. 93

All views are taken with the same stop: $f/36$.

(4) *The United States Coast and Geodetic Survey camera.*—The original type of the Coast and Geodetic Survey camera, used in connection with the Alaskan boundary survey, was similar in form to Deville's original camera, except that it had a special tripod with ball and socket adjustment and that the teeth which serve to mark the principal and horizon lines on the negative could be turned by revolving *one* button to be pressed into contact with the photographic plate.

This camera was also provided with a ground glass, enabling the surveyor to inspect the entire field controlled by each plate before exposure, and giving ready means for testing the positions of the teeth which mark the horizon line.

The camera itself was a plain rectangular box made of well-seasoned mahogany 6¾ by 5⅝ by 9¼ inches in size, and it was used always in the same position, with the short faces vertical. The bamboo tripod legs were composed of three pieces, each 16 inches long, and screwed together at the joints. When dismembered the tripod was carried in a sole-leather packing case together with the camera, twelve plates (in six double plate holders), notebook, barometer, thermometer, yellow color screen, etc.

The new phototopographic camera of the Coast and Geodetic Survey is a phototheodolite, resembling Colonel Laussedat's latest pattern which will be described in the following pages.

IV. SURVEYING CAMERAS COMBINED WITH GEODETIC INSTRUMENTS.

(Phototheodolites, photographic plane tables, etc.)

The data acquired in the field with photogrammeters of the class just described had to be supplemented with observations made in the field with some geodetic instrument (transit, plane table, etc.) in order to obtain complete topographic surveys of the regions traversed by the phototopographic surveying party.

The idea of combining surveying instruments with a photographic camera into single compact and serviceable instruments originated very early with phototopographic workers, and refined phototheodolites and photographic plane tables are to this day the favorite phototopographic instruments in Europe, whence they are also exported to other countries.

These more or less complicated instruments have been devised to secure great precision in the work undertaken with them, and refined methods are employed for the field observations, for the culling of data from the photographic perspectives, and for the computations made in the office to increase the general precision of data derived from the operations executed in the field.

Generally speaking, the best results for topographic purposes are obtained by means of photography, if we bear in mind that phototopography essentially and primarily is a constructive and graphic art, based upon graphic or pictorial records (which are nothing more than central

projections in vertical plan of objects and their dimensions, that are to be transposed graphically into orthogonal projections into horizontal plan). Instrumental observations being required only to furnish such elements as may be needed to make the graphic transpositions (iconometric platting in a reduced scale) of the lines of directions and distances, and also to obtain checks or a proper control for the work in its entirety.

Photographic surveys have been conducted principally in regions where other surveying

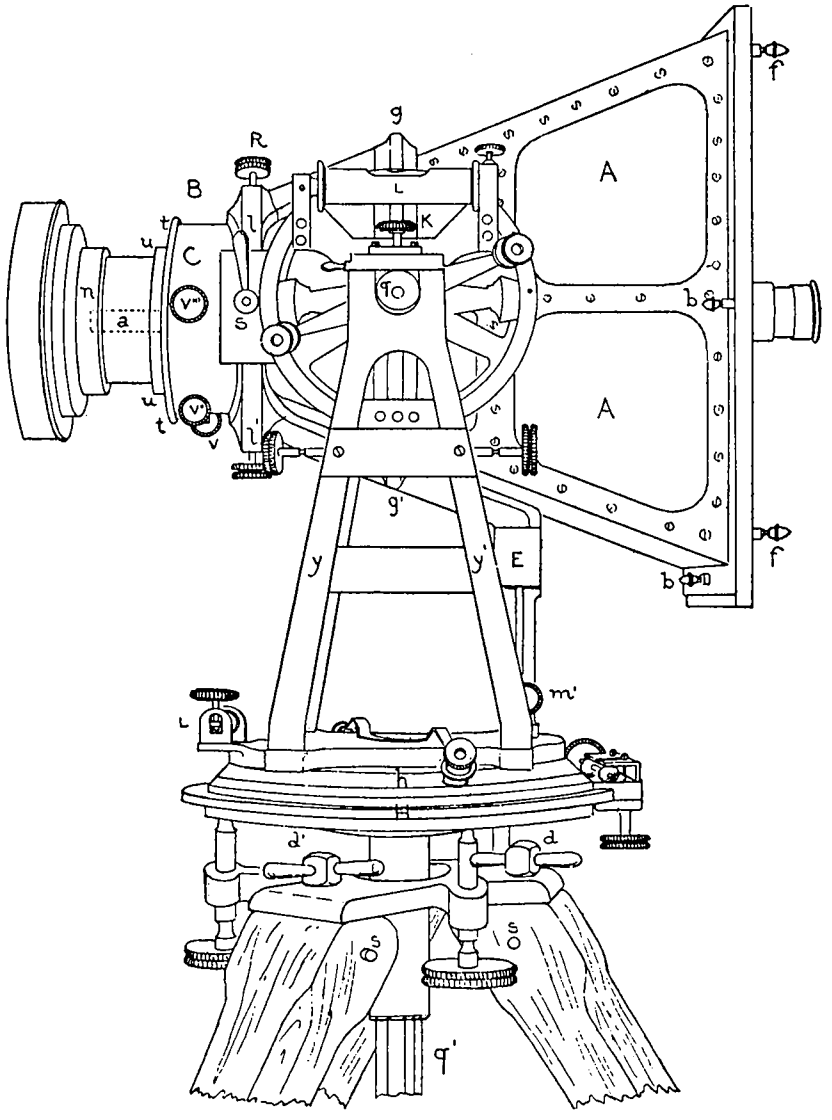

FIG. 94

methods are either precluded or where their application would entail great cost and consume too much time, and such regions are characterized chiefly by a rugged and broken topography.

The necessity, therefore, lies close at hand to devise instruments that will not readily get out of adjustment or drop to pieces when transported over rugged mountain trails, and the more simplified their structural composition the more available will they become for the production of rapid and accurate work.

It is at once evident that the combination of a camera and a surveying instrument into a well-united, well-balanced, easily manipulated, and essentially light and withal rigid instrument is not easily accomplished. It is not surprising therefore, when searching the published descriptions of

phototheodolites and other photogrammeters, to come upon a great number of types in which the many difficulties have been overcome, more or less successfully, by various devices.

We may find: A large-sized theodolite with a small camera, placed centrally between the Y supports, after removal of the telescope from the latter, both being interchangeable;

A large camera mounted upon the horizontal circle with a telescope and vertical circle attached eccentrically (at either side of the camera);

A large centrically located camera, the lens of which serves at the same time as objective of the telescope, the corresponding eyepiece being at the center of the frame that ordinarily supports the ground glass plate (in this form the camera itself is the telescope);

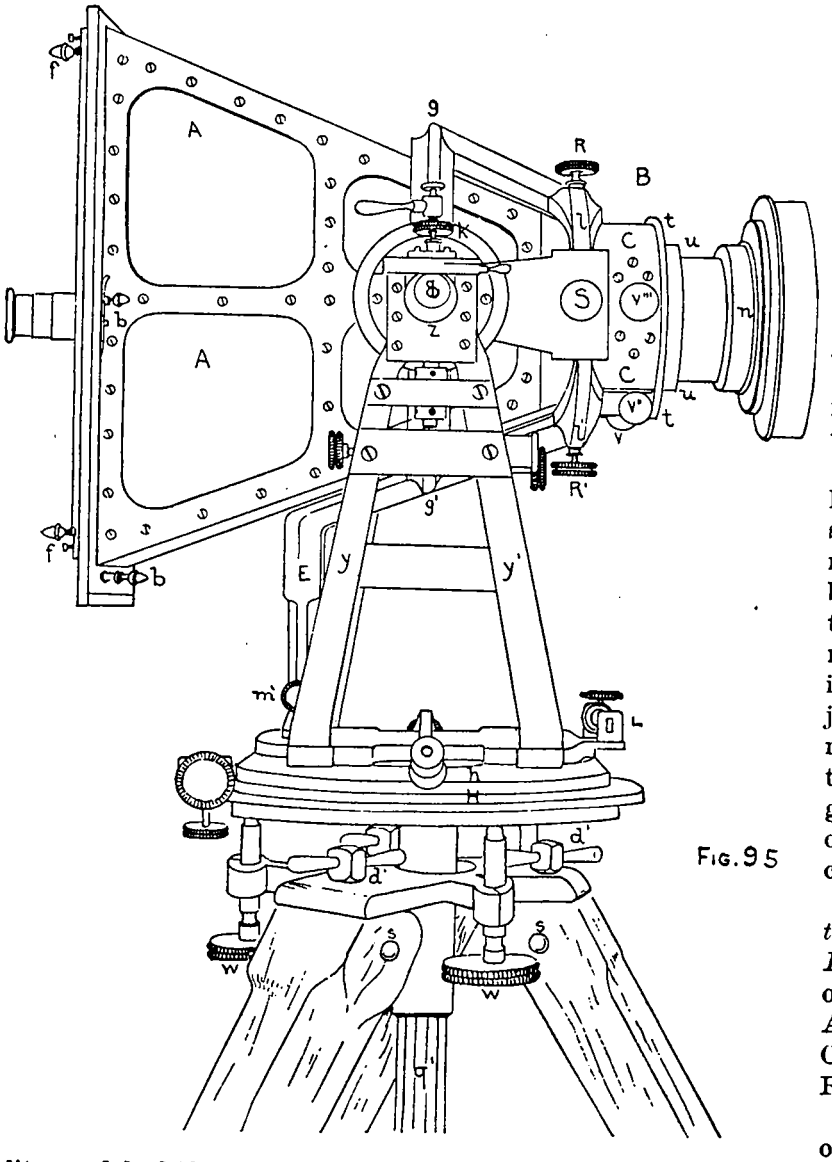

FIG. 95

Instruments where the board of the plane table has been replaced by a surveying camera, the upper face of which receives and supports the plane-table sheet and plane-table alidade; also various other combinations (some with compass attachments).

This class of instruments has been in use for large scale surveys and where the instrumental outfit could readily be brought very near the stations to be occupied by convenient means of transportation, the instruments rarely being subjected to such primitive and rough methods of transportation over long distances, as it generally has been the case on our continent when surveying cameras have been used.

(1) *The new Italian phototheodolite, devised by L. P. Paganini.*— Paganini's model of 1884 has been described in Appendix No. 3, United States Coast and Geodetic Survey Report for 1893.

The following description of Paganini's new phototheodolite, model of 1890, has been extracted from L. P. Paganini's "Nuovi appunti di fototopografia," Roma, 1894:

The general form and the dimensions of the camera box of Paganini's new phototheodolite remain about the same as with the older model, the principal change resting in the omission of the eccentric telescope which has been replaced by the centrally mounted camera, which may, at will of the observer, be converted into a telescope.

The telescopes which we generally find attached to surveying instruments consist of a tube, slightly conical in shape, having a positive lens or a system of convergent lenses at one end (the "objective") which produce within the telescope a real and inverted image—the same as the camera lens—of any object toward which the lens may be directed. The other, smaller end of

the telescope tube, has a still smaller tube inserted into it which may be moved in the direction of the axis of the tube. This second tube also contains a system of convergent lenses—so-called "ocular lens" or "eyepiece" of the telescope—which serve to project an enlargement of the image in the telescope upon the retina of the observer's eye. In the image plane of the objective (within the telescope), is the so-called diaphragm—a ring-shaped metal disk—to one side of which a pair of cross hairs—spider webs, cocoon threads, or lines cut into a thin piece of plate glass—is attached in such a way that the hairs fall within the image plane. One hair is vertical and the other horizontal, their point of intersection coinciding with the optical axis of the telescope.

The old camera was provided with the objective, and a corresponding eyepiece had only to be added to convert the camera into a surveying telescope. In the instrument under consideration the eyepiece consists of a positive lens set, known in optics as "Ramsden's ocular lens." The inner wall surfaces of the camera box should be well blackened to avoid any side reflection and a consequent dimness in the appearance of the cross wires.

The camera proper consists of two parts, a truncated pyramid *A*, figs. 94 to 98, and a cylindrical attachment *B*, into which the tube *t* is inserted. A second tube within the cylinder *t* may be moved in the direction of the optical axis by means of a screw, the threads of which have a rise of one millimetre. By revolving the inner tube the lens is brought nearer to or farther from the image plane, the lens remaining parallel with the image plane at any position that may thus be given to the lens.

A scale *a*, figs. 94 and 98, graduated to millimetres, is permanently attached to the tube *t* and it lies very close to the ring *n*, the circumference of which is divided into ten equal parts. (This graduated ring *n* is soldered upon the cylinder *u* containing the camera lens.) This scale *a* (extending in a direction parallel to the optical axis of the lens) has a mark, coinciding with the index rim of the ring *n*, thus indicating the focal length of the camera lens when focused upon objects at infinite distance. The millimetre graduation of the scale *a*, extending from the zero mark in the direction toward the ground glass serves to ascertain the focal lengths for objects nearer the camera station. The circumferential graduation on the ring *n* serves to read one-tenth of one revolution of the tube *u*, which is equal to an axial motion of the lens of 0·1 millimetre, hence the focal length for any object focused upon may be read to single millimetres on the scale *a* and to tenths of a millimetre on the graduated ring *n*.

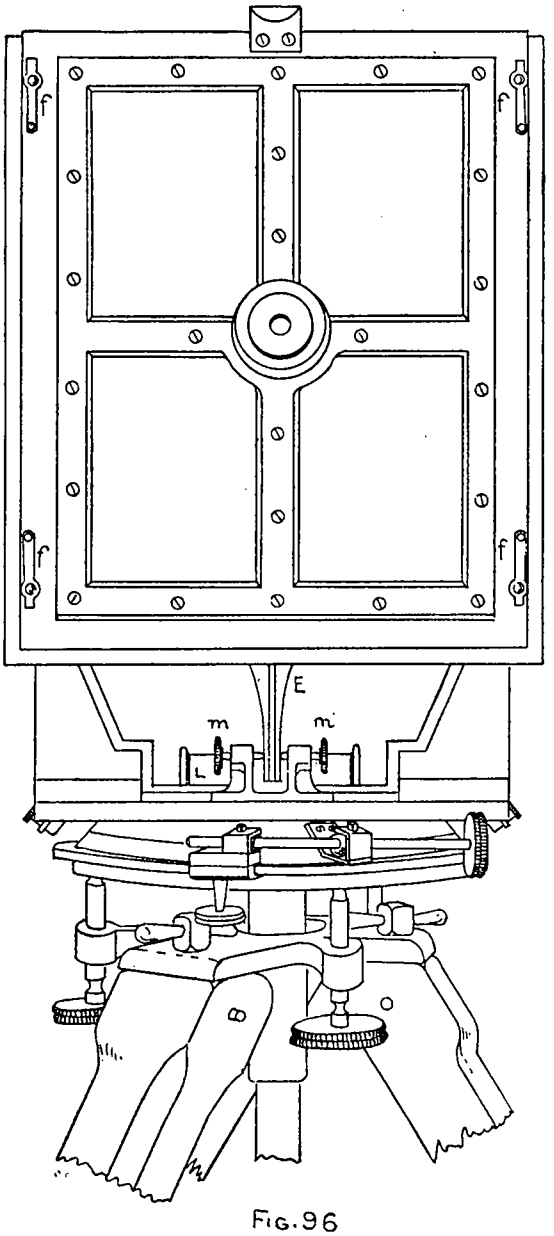

FIG. 96

The construction of this phototheodolite is such that the optical axis of the camera lens is always at right angles to the picture plane—the ground-glass surface or the sensitive film of the photographic plate. The intersection of the optical axis and the picture plane, the principal point, is marked by the intersection *P*, fig. 97, of the two very fine platinum wires *O O'* and *f f'*, one horizontal and the other vertical when the instrument is in adjustment. These wires are stretched across the back of the camera box as close as possible to the picture plane. The buttons *b*, figs. 94 and 95, serve to give tension to the wires. The wire *O O'* corresponds to the horizon line and the vertical wire *f f'* corresponds to the principal line of the perspective represented by the image on the ground-glass plate.

Fig. 96 shows the rear view of this instrument, the ground glass having been replaced by an opaque plate, strengthened by a metal frame and ribs, which supports the Ramsden eyepiece in the center, its optical axis coinciding with that of the camera lens. The cross wires $O\,O'$, $f\,f'$, at the rear of the camera, serve also for the astronomical telescope into which the camera may be converted by attaching the opaque plate with central eyepiece as shown in fig. 96. The fitting of this eyepiece allows for axial motion to adjust its position to avoid parallax.

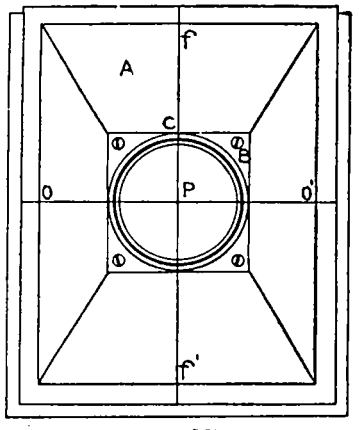

FIG. 97

The rear opaque plate and the other sides of the camera box are made of cardboard (impregnated with chemicals to render it impervious to moisture), and they are stiffened by frames and ribs of metal as illustrated in figs. 94 and 96.

The cylindrical part B, figs. 94, 95, and 97, is inclosed by a solid metal collar C, which is held in position within the metal ring $l\,l'$ by four screws R, R', S, S'. This ring $l\,l'$ is connected with the frame $g\,g'$ by means of two arms $l\,g$ and $l'\,g'$, all being cast into one piece. The frame $g\,g'$ has pivots q attached to it which form the horizontal axis of rotation for the camera.

This instrument is provided with a vertical circle, fig. 94, horizontal circle H, figs. 94, 95, and 98, verniers, reading microscopes, levels L, figs. 94 and 96, clamps, and slow-motion screws, forming a complete transit with centrally mounted "camera-telescope."

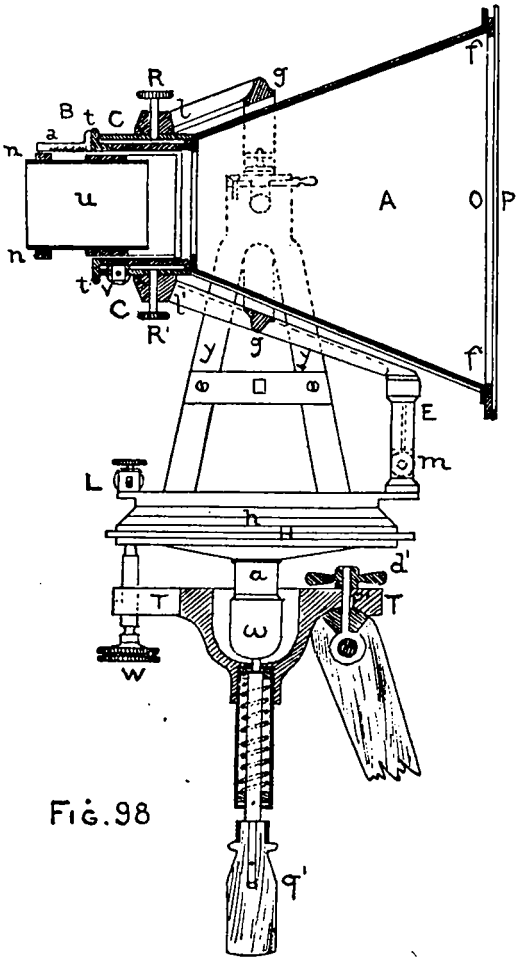

FIG. 98

Fig. 98 represents a vertical section of this instrument. The scale a, already described, is here placed on top of the tube u to illustrate its function better. yy = uprights, supporting the horizontal axis of rotation of the "camera-telescope." h = alidade supplied with verniers. H = lower limb or horizontal circle bearing the graduation; it is supported on the tripod head T by three leveling screws W. a = casing for conical center. q' = central clamp-screw, firmly uniting T and H (it guards against an accidental falling off of the instrument from the tripod); it screws into a ball which is supported by the hemispherical socket w of the lower part of a.

The horizontal circle has a diameter of 10·5 centimetres. It is graduated into thirty minutes, and its verniers read to single minutes.

The photographic plates are 18 by 24 centimetres, the same size as for the 1884 model camera.

The objective lens was an aplanat of Steinheil of 237·7 millimetres focal length. More recently, however, the Italian phototheodolites have been provided with anastigmats of Zeiss.

The column E, figs. 94, 95, 96, and 98, forming a prolongation of the lower arm $l'\,g'$, is held in place by two counter screws m and m', fig. 96, which serve to hold the horizontal axis of rotation of the camera in a fixed position, avoiding accidental changes during the execution of a set of panorama pictures.

After unscrewing the nuts d', fig. 98, the tripod legs may be removed. They serve as "alpenstocks" when the instrument is being transported from station to station. The camera-telescope is lifted out of the wyes and packed in a separate case; the lower part of the instrument is packed in another case, and the plate holders and plates are transported in a third case.

(2) *Photogrammetric theodolite of Prof. S. Finsterwalder.*—This phototheodolite (manufactured by Max Ott (A. Ott), of Kempten, in Bavaria) was devised by Dr. Finsterwalder after many years of practical work and experience incidental to his Alpine surveys and studies of glacial motion. This experience taught him the desirability of producing a camera compactly built, rigidly constructed in all its parts, and yet having a minimum of weight. To avoid the extra weight when transporting a separate theodolite (with the surveying camera) for the trigonometric location of the stations occupied with the camera, he provided the surveying camera with the means for observing horizontal and vertical angles.

Professor Finsterwalder's phototheodolite is illustrated in fig. 99. The entire outfit weighs 10 kilogrammes, which weight is distributed as follows:.

	Kilogrammes.
The instrument per se	2·7
Carrying case for same	2·4
The tripod	1·7
One dozen leather plate holders, including the twelve plates	2·5
Packing case for the latter	0·7

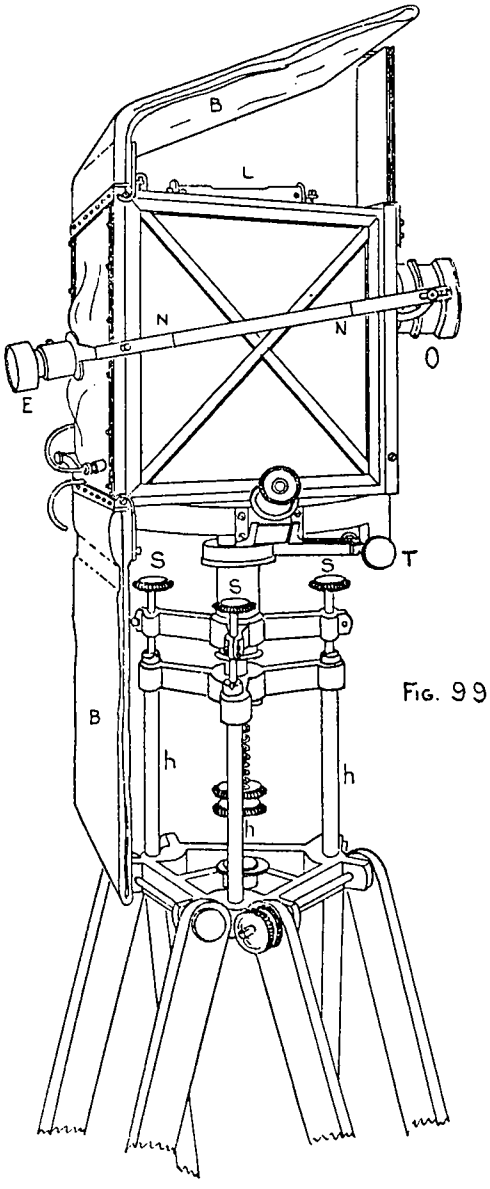

Fig. 99

Professor Finsterwalder has used a double anastigmat of Görz and later an anastigmat of Zeiss, with a constant focal length of 150 millimetres. With this focus the lens will photograph perspectively correct a plate of 160 by 200 millimetres. The plates have a size of 120 by 160 millimetres and they command an effective horizontal field of 53°, enabling the observer to cover the complete panorama with seven plates.

For the central or normal position of the objective the camera commands an effective vertical field of $\pm 20°$. This range would often be insufficient, particularly when photographing mountainous terrene of an alpine character, therefore it was deemed advisable to mount the objective on a slide, which will permit a considerable change in the vertical sense. Owing to this device, objects subtending an angle of depression of 35°, together with others subtending an angle of elevation of 5°, may still be photographed on the same plate, giving a vertical control of 40° in all.

In extreme cases, when it should become desirable to photograph objects subtending angles of $+35°$ and of $-35°$, or 70° in all, Professor Finsterwalder recommends the exposure of two plates in succession, commanding the same (identical) horizontal angle, exposing one with the maximum elevation of the objective slide and the other with the maximum depression of the lens. Thus, inclined pictures are not only avoided, but the effective surface of the plate is utilized to the best advantage, and the weight of glass to be carried is reduced to the minimum.

In order to obtain uniformly accurate results with the relatively short focal length (maintaining a constant distance between the lens and the sensitive surface of the plates), the plates are not inserted into plate holders (where the variable thickness of the glass would affect the so-called "constant focal length"), but they are pressed directly against a metal frame, which forms the back of the camera box, very similar to the arrangement described for Captain Deville's (Canadian) camera. To do this, use has been made of Dr. Neuhauss's leather plate holders, formed like a sack *B*, fig. 99. The inner edges of the metal frame are graduated in order to locate the principal and horizon lines upon the negatives.

These leather sacks have metal slat arrangements, and the transfer of the plate from the sack to the camera is made by hooking the sack with its mouth to the upper edge of the rear camera side. While holding the bag in a vertical position the slats are opened and the plate is allowed to slide from the sack into the carrier to be exposed.

Springs are provided at the back of the camera box to check against a sudden dropping of the plate into the metal carrier, to avoid a breaking or cracking of the plate by striking the closed lower metal slide of the plate carrier too hard. These springs also serve to press the plate, when in position for exposure in the carrier, into perfect contact with the graduated metal frame at the back of the camera box.

By withdrawing the upper curved handle, fig. 99, at the back of the camera, the tension of the springs may be reduced and the plate glides into position to be exposed. After exposure the lower slide is withdrawn and the plate will slip into the empty sack *B*, which had been hooked to the lower edge of the camera back for this purpose, as illustrated in fig. 99.

The eccentricity of the center of gravity, by applying the weight of the sack and plate to one side of the camera, does not affect the adjustments of the instrument sufficiently to throw the photographic plate out of the vertical plane in which the exposure should be made. This camera theodolite is accurately balanced when no sack is attached, in which form it is used to measure the angles that may be needed to locate the camera station (geographically, and also in the vertical sense) with reference to surrounding trigonometric signals.

In order to convert this camera into a theodolite (with centrally located telescope), the back of the camera is provided with a telescopic eyepiece *E*, of a magnifying power of from 7 to 8. This eyepiece is adjusted to form a surveying telescope with the camera lens *O* as objective. It is provided with cross wires or webs, and a shutter affords the means to shut out the light when the instrument is used for photographing.

The camera lens (objective of "camera telescope") being movable in the vertical sense within a range of 100 millimetres, all objects falling within a range of $\pm 17^\circ$ may be bisected with this telescope. The definition of points to be bisected, when above or below the camera horizon, would be very poor if the eyepiece *E* were rigidly fixed in the horizontal position, but by means of the metal arms *NN* the eyepiece may be revolved about a horizontal axis in such a way that it will always be directed to the center of the camera lens.

With the double anastigmat of Görz, which produces a perfectly flat picture (with neither spherical, chromatic, nor astigmatic aberration or distortion), a change in the focus of the eyepiece will rarely be required.

Horizontal angles may be observed directly by means of a horizontal circle of 120 millimetres diameter, which is provided with two verniers reading to single minutes. A series of experimental tests has proven that horizontal angles observed between points of considerable difference in altitude may be obtained within a limit of error of 0·4′. This instrument, therefore, gives results sufficiently accurate to locate the camera station trigonometrically with reference to surrounding fixed points of known positions, if they are not too far distant to be defined with this low-power telescope.

Vertical angles, however, can not be obtained directly. Still, by means of a scale and vernier attached to the camera-lens slide (or front board) the change of the camera lens from its central or normal position (that is, a value directly proportional to the tangent of the vertical angle) may be read to 0·05 millimetre. The slide motion of the front board is accomplished with a rack and pinion, and experience has proven that the observations may be obtained within a limit of error (converted into arc measure) of 1 minute.

The three rods, designated by *h* in fig. 99, are each 100 millimetres long. They serve to elevate the instrument support and the three leveling screws *S* sufficiently high above the tripod to allow full play for the leather plate holders *B*, when they are placed in position to receive the exposed plate. The tripod legs may be folded together to one-half their length.

No ground-glass plate being provided, a special finder has been devised correctly showing the field controlled by the plate for any position of the camera lens. (See Zeitschrift für Instrumentenkunde, October, 1895.)

(3) *Photo-theodolite for precise work, by O. Ney.*—This instrument has been patented in the

German Empire, and the following description has been taken from Zeitschrift für Instrumentenkunde, page 55, 1895:

In the construction of this instrument, figs. 100 and 101, it has been sought to satisfy the following requirements:

First. The camera should be sufficiently large to produce clear and well-defined perspectives.

Second. The general disposition of weight and mass should be symmetrical (the camera and the telescope of the theodolite were to be mounted centrally).

Third. The weight of the instrument should be reduced to the minimum consistent with rigidity and sufficient strength to assure a free and easy manipulation, as well as durability or permanency of its adjustments when used in the field.

This instrument is composed of two distinct parts, the camera proper (with horizontal circle) and a complete transit. They may be used separately and independently, but always upon the same support and with the same tripod. The interchange

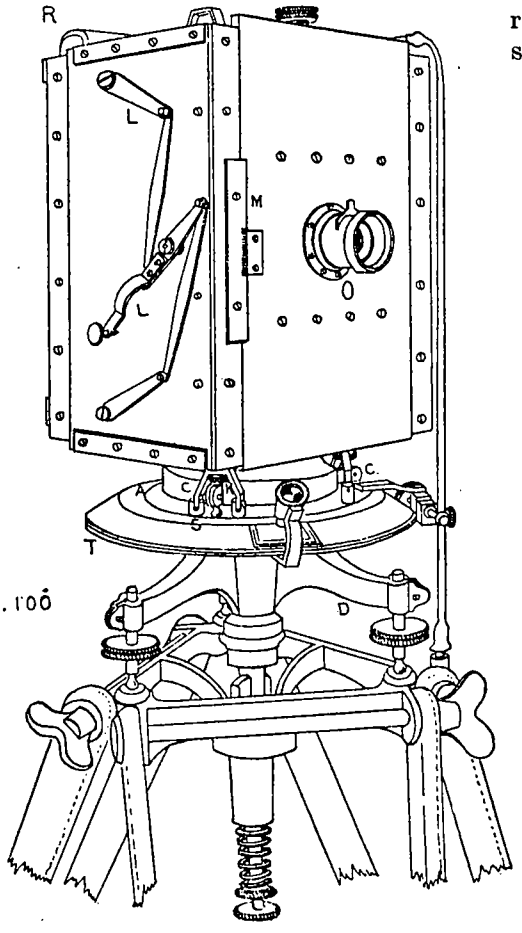

Fig. 100

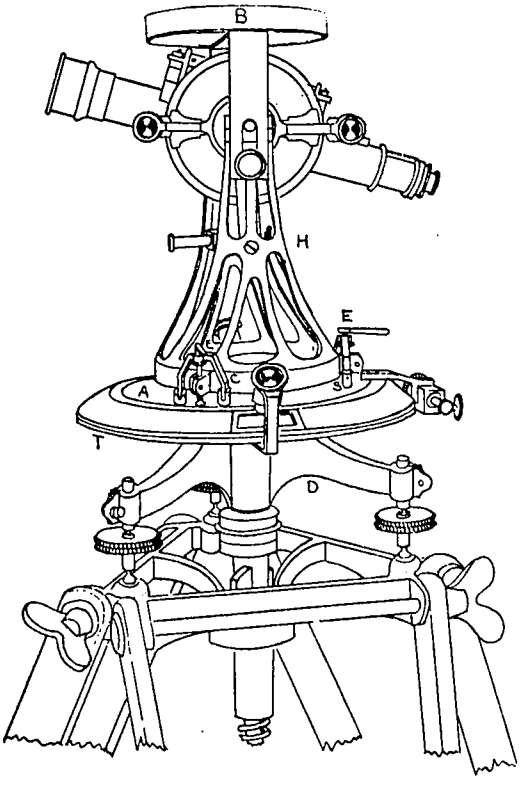

Fig 101

between camera and transit is readily accomplished (both being centered over the same instrument support) with accuracy and expediency.

The principal advantages attached to this disposition of the component parts of the photo-theodolite may be cited as follows:

First. The symmetrical and central mounting of the camera and transit telescope insures accuracy in the results.

Second. The weight of each separate instrument—camera and transit—has been reduced to a minimum.

Third. A disturbance of the adjustments of the instrument support (including tripod) may be completely avoided by having the plate inserted and the slide withdrawn before placing the camera box into position upon the upper alidade limb.

The carrying into effect of the ideas just mentioned has been greatly aided by supplying all

leveling and clamp screws with spherical ends resting upon plates in such a manner that a free play of motion will take place. These spherical terminations of the screws were originally devised by Reichel.

The two forms in which this instrument may be used are shown in figs. 100 and 101. The former shows the photo-topographic camera (similar to Professor Finsterwalder's instrument), and the latter shows the transit with compass *B*.

D is the very rigid, yet essentially light, instrument support, the three arms being cast into one piece with the bearing for the conical pivot attached to the horizontal limb *T*.

T is the lower graduated limb and *A* is the upper limb of the alidade bearing the verniers.

A large circular level is attached to the center of the upper limb of the alidade. The latter has three hardened plates inserted into its upper surface (at *S*, figs. 100 and 101), one with a plane surface, the second with a conical cavity, and the third with a V-shaped groove or slot. They form the supports for the spherical terminations of the three screws *K*, fig. 100, attached to either the transit or the surveying camera. These screws are received between the flanges *C* that form a part of the base ring supporting either the camera or the telescope wyes *H*, fig. 101.

The two sets of three screws *K* (one for camera and one set for the transit) serve to adjust the horizon lines of both instruments and to bring them into the same horizontal plane.

The transit telescope is arranged for stadia reading (after Porro's method), with 100 as the constant factor. The telescope level reads to 20″, and the final adjustment of the transit is accomplished by means of this level. The striding compass *B*, fig. 101, is graduated to read to 30′, whereas the horizontal circle reads either to 10″ or 20″, according to the size of the instrument.

In order to secure the transit and the camera to the horizontal circle (which both have in common) three horseshoe-shaped clasps (shown near *C*, figs. 100 and 101) are hinged to the upper limb *A* of the alidade in such a way that they straddle either set of the three screws *K* of the projecting flanges *C* (when they are turned up as shown in the figs. 100 and 101).

Each of these clasps has a clamp screw with lever handle *E*, fig. 101, and by tightening these three clamp screws they are brought to bear upon the hardened heads of the screws *K*, making a firm connection between the upper limb of the alidade and the superimposed transit or camera. This connection is easily made, and it does not disturb the adjustments of the instrument.

This instrument is made in two sizes; one has plates 13 by 18 centimetres, and the other 18 by 24 centimetres. To avoid changes in the dimensions of the camera box, due to hygroscopic influences of the atmosphere, the box is constructed entirely of aluminium. The plate holders and the movable plate carrier, however, are made of mahogany, impregnated with chemicals to make the wood impervious against moisture.

To avoid any possible change in the constant focal length, due to an uneven thickness of photographic plates or of the plate holders, the movable carrier may be moved toward the camera lens by means of the levers *L*, fig. 100, until the sensitive surface of the photographic plate is brought into contact with a metal frame, securely fastened to the sides of the camera box, and which has a centimetre graduation filed into its inner edges. The distance of the rear surface of the graduated frame from the second nodal point of the camera lens constitutes the constant focal length of the camera.

The centimetre graduation on the inner edges of the metal frame, reproduced on the margin of the negatives, serves to ascertain whether the sensitive films (or the contact prints) have undergone any change during the process of development and also to ascertain the amount of correction to be applied to the perspective, if found to be distorted, before using it for the iconometric platting.

The camera is provided with a pair of cross levels to enable the observer to detect any change in its adjustments prior to exposing a plate. These levels are graduated to read to 20″ of arc. When the instrument is in perfect adjustment, the picture plane will be in a vertical plane and the principal ray will be in the same horizontal plane as the optical axis of the telescope (when level), if the camera were replaced by the transit without disturbing the tripod's position.

When this camera theodolite is adjusted, the vernier *M*, fig. 100, will read zero for the normal position of the lens. Still, the objective may be elevated or depressed by 35 millimetres, which change from the normal or central position of the lens may be read correctly within 0.1 millimetre

on the scale and vernier *M*, fig. 100. The pneumatic camera shutter is arranged both for time and for instantaneous exposures, a special device guarding against the possibility of exposing a plate before it is brought into perfect contact with the graduated metal frame, previously mentioned.

The plate holder can not be withdrawn from the camera before the slide has been replaced, nor as long as the plate is in contact with the graduated frame.

(4) *The phototheodolite of Dr. C. Koppe.*—Dr. C. Koppe, professor at the Technical High School in Braunschweig, Germany, is an ardent advocate of photogrammetry and he has done much toward popularizing photographic surveying in Germany. His work on photogrammetry, published in 1889, is an excellent manual both in respect to theory and practice. In 1896 he published a treatise on photogrammetry applied to cloud photography for meteorological research.

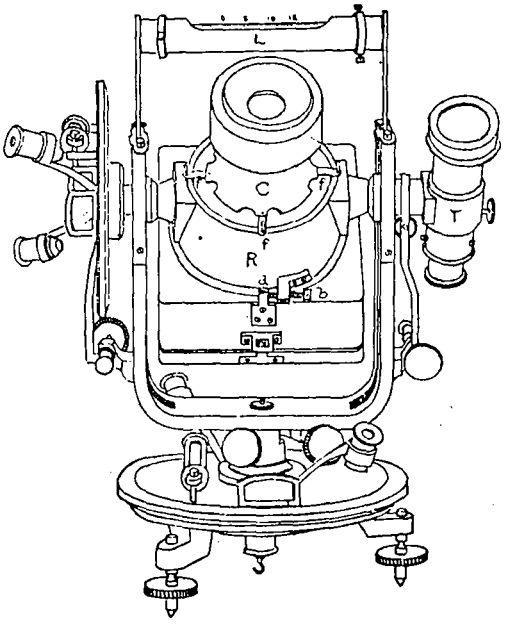

FIG. 102.

This phototheodolite, fig. 102, has a centrally mounted camera with the telescope on one side and the vertical circle on the other. The horizontal axis between the two wyes has been widened into a conical ring *R*, into which the camera *C* may be inserted. Four stout springs *f* press the camera *C* tightly against the ring surface forming the base of the conical ring *R*. After insertion into the ring, the camera *C* is revolved within the former until the end of the screw *b* abuts against the stop *d*, when the horizon line of the perspective (negative) should be horizontal.

The camera axis is parallel with the optical axis of the telescope *T*, both axes being in the same horizontal plane when the vernier of the vertical circle reads zero. When elevating or depressing the telescope *T* the camera axis will follow the same motion, both remaining parallel. The instrument will be in equilibrium with the camera de- or attached. The horizontal axis of this instrument may be adjusted by means of the striding level *L*, which, when necessary, may be replaced by a striding compass in a manner similar to that illustrated in fig. 101.

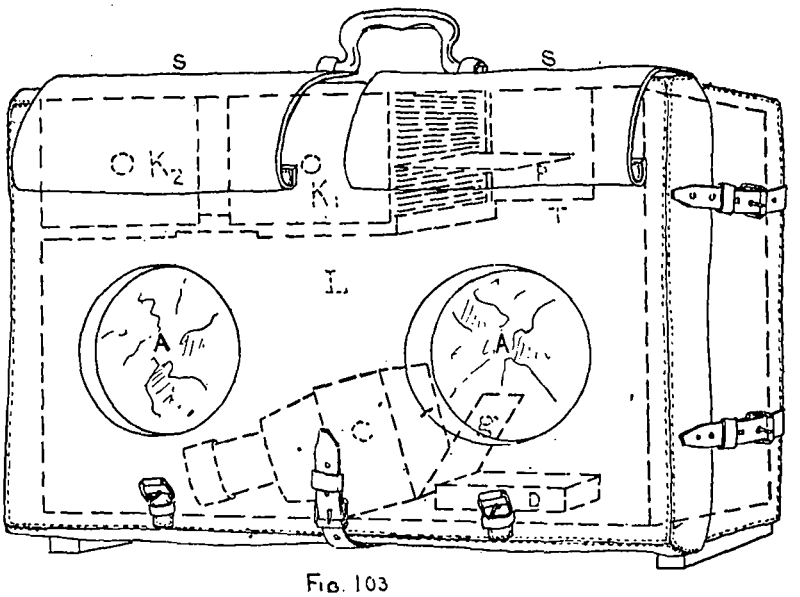

FIG. 103.

Since the telescope may be reversed in the wyes, an error of collimation and any index error of the vertical circle may be found or eliminated.

There are neither slides nor plate holders provided with this instrument, the plates being inserted directly into the camera. This may be done in the field by aid of the packing case specially constructed to serve as a dark chamber, fig. 103.

This case is made of wood with double doors, each door having a circular hole *A*, which is filled in with a flexible, light-tight, and dark-colored material, forming sleeves in such a way that the hands of the operator may be thrust through an elastic opening in the center (of the

circular openings). The fabric will close tightly around the wrists—when the interior of the case will be perfectly dark—and the sleeves A will permit free play to the hands for manipulating the camera and plates within the space L of the case.

This case is inclosed with a tight-fitting sole-leather covering, having two flaps S to protect the openings A against the admission of dust when the packing case is transported on the back of the instrument bearer.

The entire instrument, except the tripod, may be packed into this case for transportation. It also contains two boxes, K_1 and K_2; the former receives the exposed plates (negatives) while the latter contains the supply of unexposed plates.

When a plate is to be exchanged the camera C is placed into the packing case and both doors as well as the leather main flap or cover are securely closed; both hands are now inserted through A, and after the sleeves are tightly closed about the wrists the camera is opened, the exposed plate removed and placed into the box K_1 (as shown at P, fig. 103). The door T is closed and a new plate, taken from the box K_2, is placed into the camera (as shown by g, fig. 103) and the camera back is closed, when the camera will be ready for another exposure.

The constant focal length of this camera is represented by the distance between the second nodal point of the lens and the rear surface of a metal frame (similar to that of Ney's phototheodolite) permanently attached to the rear of the camera box.

The inner edges of this metal diaphragm or frame are graduated into centimetres; the middle graduation marks of the horizontal sides of the frame locate the principal line, while the middle graduation marks of the vertical sides represent the termini of the horizontal line on the perspectives. The focal length, once determined, will remain unchanged for all plates.

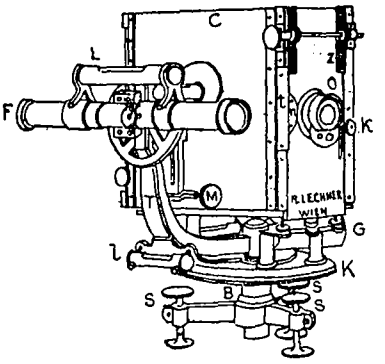

FIG 104

This instrument has been manufactured for Professor Koppe by F. Randhagen, in Hanover, Germany.

The "Topographic Bureau" of the Swiss Republic has used a phototheodolite constructed after the model of Dr. Koppe's instrument. The experience in Switzerland, however, seems to have decided the topographic bureau *not* to replace the plane table by the phototheodolite for general topographic surveys executed by that bureau.

(5) *Phototheodolite devised by V. Pollack, manufactured by R. Lechner in Vienna, Austria.*—With this instrument (fig. 104) the camera C is centrally located, and it rests upon a horizontal circle. The telescope F and the vertical circle are mounted at one side of the camera, a weight G counterbalancing both on the other side of the camera.

Aluminum has been used very freely in the construction of this phototheodolite in order to reduce the weight as low as possible. This instrument has been manufactured in two sizes; the horizontal circle of the small-sized one is graduated to 30′, the verniers reading 1′, while the larger one has a circle graduated to 20′, and its verniers read 20″. The telescope F is mounted similarly to that of the so-called Danish plane table alidade.

The adjustment of the horizontal axis of revolution of the telescope F is accomplished by means of a special level. Clamps and slow-motion screws are provided for both the horizontal and vertical circles. The telescope has a focal length of 27 centimetres and an opening of 31 millimetres, with a magnifying power of 9 to 18 diameters. The telescope is arranged for stadia reading, and it has 100 as the constant multiplier. The telescope level L is graduated to 10″ or 20″. The vertical circle is graduated to 20′ and its two verniers read to 20″.

The camera box is made of aluminum and it is provided with a Zeiss anastigmat. By means of the rack and pinion z the lens may be elevated or depressed by either 30 or 50 millimetres, according to the size of the instrument. The scale t, with vernier n, serves to measure the vertical deviation of the lens from its normal position. Also this camera is provided with a graduated metal frame, the inner edges of which have either a centimetre or five-millimetre graduation, which is reproduced upon the margins of the negatives. They serve not only to locate the horizon

and the principal lines upon the perspectives, but they also give the means to discover any distortion that may arise in the pictures due to the wet process of development.

This metal graduated frame is brought into contact with the sensitive surface of the film by a simple mechanical contrivance in such a way that the focal length for all negatives is constant, even if the plate holders or glass plates should not be equally thick.

(6) *Col. A. Laussedat's latest phototheodolite.*—This instrument (figs. 105 and 106) has been manufactured by E. Ducretet and L. Lejeune, in Paris, France.

Both transit telescope L and camera C are centrally mounted, the latter above the former. The camera may also be used alone, independently of the transit, and it may then be mounted upon the tripod (fig. 106) by means of a special pivot or spindle S'. The transit may likewise be used alone, without the camera, for trigonometric observations.

S = leveling screws. c_1 = central clamp screw. C = camera, and B = magazine for fifteen plates. O = objective of the camera; it is a rectilinear wide-angle lens of 75 millimetres focal length. H = sliding front plate of camera, provided with pinion and rack movement, R, to elevate or depress the lens. V = finder to show the extent of the field covered by the photographic plate, although a focusing glass, G, fig. 106, is also provided. L = transit telescope provided with stadia wires. Ce = vertical circle, graduated to 30′. M = Wye supports of the telescope axis of revolution, their prolongation forming the camera support. A = horizontal circle graduated to 30′; its clamp and slow-motion screw are indicated at P'. N = adjustable level. D = declination or box compass.

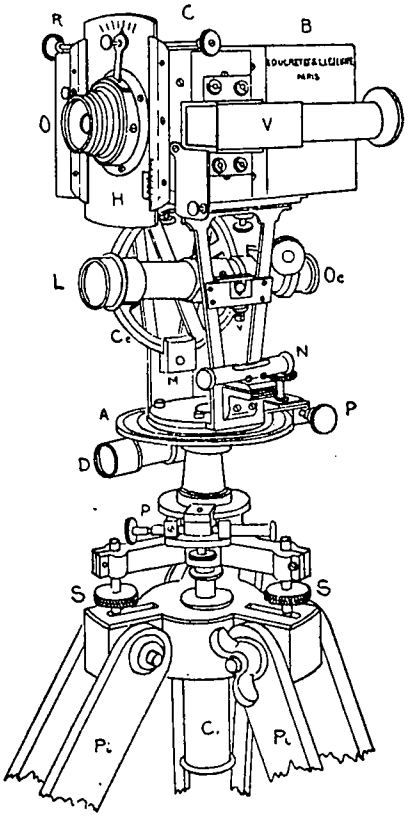

FIG. 105

Several loaded magazines, each containing 15 plates, may be carried with this instrument and the plates may be exchanged in full daylight without having to remove the camera. The photographic plates are 6½ by 9 centimetres, but enlarged prints are used for the iconometric platting. Six plates cover the entire horizon and will form a complete panorama.

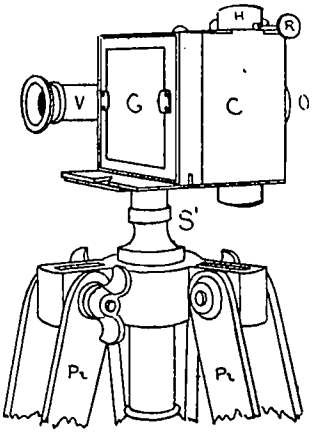

FIG. 106

The lens is provided with an iris shutter. It may be focused for short distances or infinity by turning a lever over a scale showing the distances in metres attached to the front board, H, of the camera.

In fig. 106 the camera is represented with the magazine, B, removed and replaced by the ground glass plate, G.

The entire outfit, excepting the tripod, may be transported in one carrying case (with shoulder or pack straps) of 39 by 28 by 17 centimetres size and 8 kilogrammes weight if but one magazine filled with 15 plates is included.

(7) *The phototheodolite of Starke and Kammerer.*—This instrument, fig. 107, is somewhat similar in construction to Professor Finsterwalder's phototheodolite; both have neither telescope nor vertical circle, being provided with camera telescopes instead.

An ordinary skeleton tripod supports the three leveling screws, S, and a central clamp screw with spiral spring, P, securely connects the tripod head with the instrument proper. H represents the horizontal circle, graduated to 20′, but by means of two verniers and microscopes, L, horizontal angles may be read to 1′.

The vertical axis of revolution, ending in three horizontal arms, B_1, B_2, B_3, may be adjusted with the aid of the leveling screws S and the cross levels l_1, l_2. The plate D, forming the support of the cross levels, is firmly united with the arm B_2.

E = upper clamp screw. M = upper tangent screw for slow motion. F_1, F_2, F_3 = three leveling screws supporting the camera telescope; they rest in grooves on the arms B_1, B_2, B_3. l_3, l_4 = cross levels, attached to the camera telescope, figs. 107 and 108; they serve to adjust the photographic plate into vertical plane, using the three leveling screws F_1, F_2, F_3 for this purpose. S = movable front board or lens slide, figs. 107 and 108. Q = handle to facilitate the mounting of the camera,

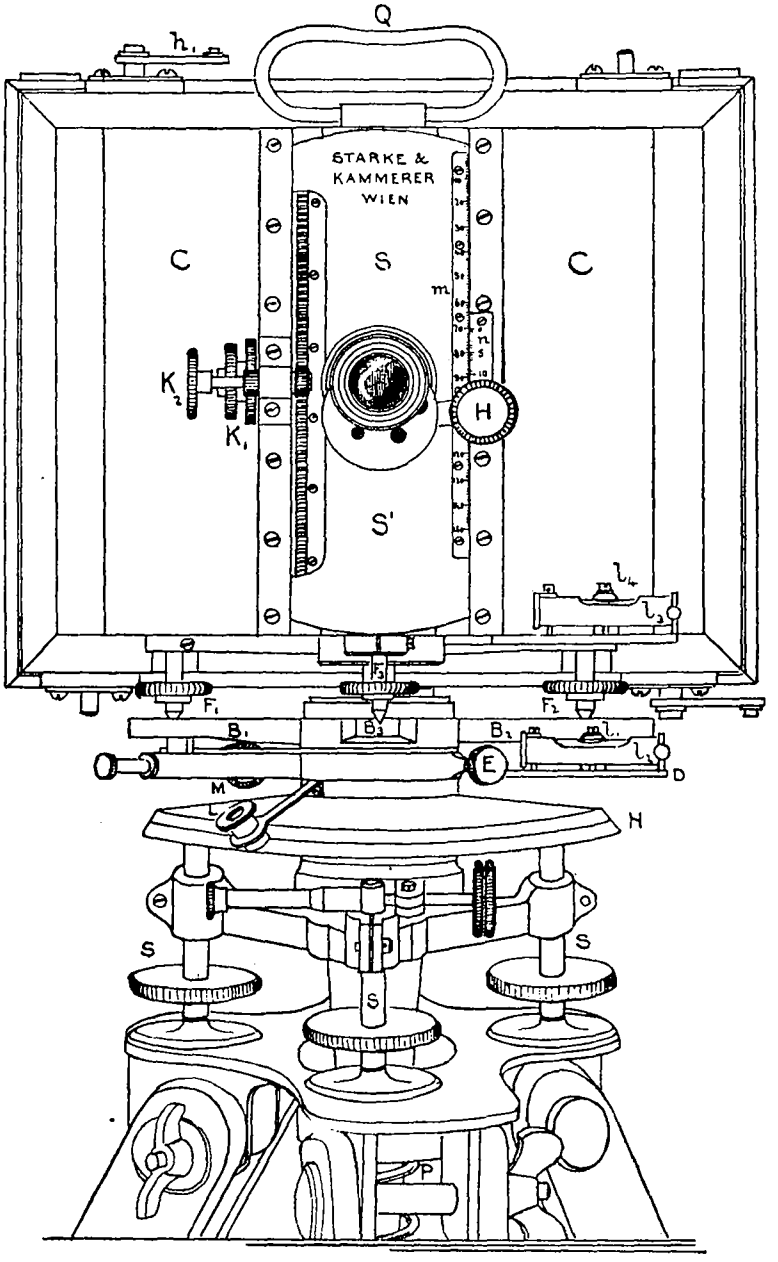

FIG. 107

C, upon the three arms B_1, B_2, B_3. K_1 = pinion for elevating or depressing the front board S, which has a corresponding rack, as illustrated in fig. 107. K_2 = differential pinion for slow motion of the front board. H = clamp screw for fixing the lens in any position above or below its central or normal position. m = millimetre scale for measuring any vertical change of the lens from its normal position, the vernier n permitting such change to be read to 0·05 millimetre.

The camera may be securely united with the vertical axis of the horizontal circle by a clamp screw manipulated from within the camera box.

When the zero mark of the vernier *n* coincides with the 70 mark of the scale *m*, the lens should be in its central or normal position. The slide *S* may be moved 70 millimetres up or down; from 70 to 140 it falls above the normal position.

The lens is a Zeiss anastigmat, $^{f}/_{18}$, with a focal length of about 212 millimetres.

When the camera lens is suitable for photo-topographic purposes, the horizontal change in the distance between its second nodal point and the image plane should only be:

0·09	0·11	0·15	0·22	0·45 millimetre for:
distances of 500	400	300	200	100 metres.

Hence focusing may be dispensed with for general photo-topographic purposes; still, in order that this instrument—for special purposes—may also produce sharp and well-defined pictures of objects close to the camera, the lens mount is such to allow a motion in the direction of the optical

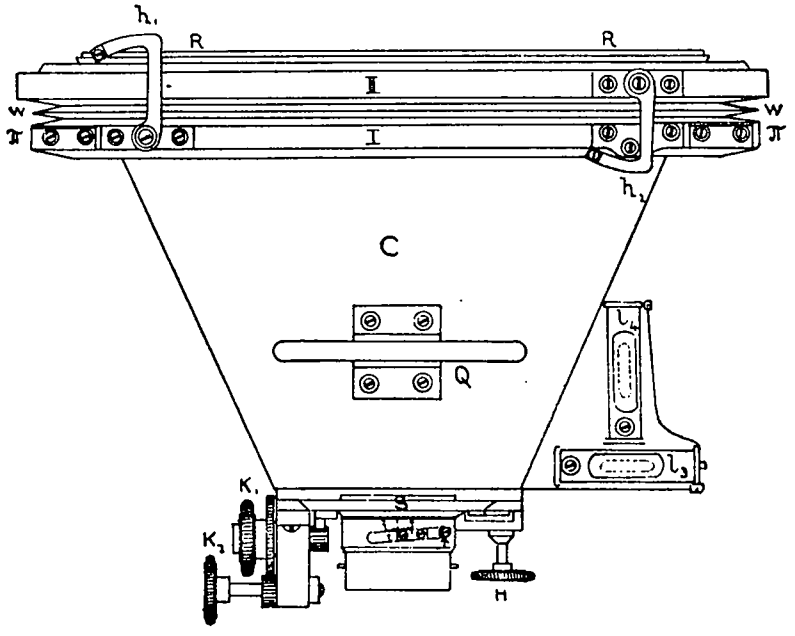

FIG. 108

axis within a range of 2 millimetres, whereby objects but 23 metres away from the camera may still be brought into focus.

The external tube of the lens mount has a helical groove or slot, fig. 108, in which a small metal block *t*, provided with an index mark, may glide freely. This block is attached to the inner tube of the lens mount, and a screw *r* at one end of the slot serves to clamp the two tubes together, when the focal length will be maintained constant for any length of time. When the screw *r* is loosened and the outer tube revolved from left to right, the focal length will be shortened. When the block *t* has passed from one end of the slot to the other, the focal length will have suffered a change of 2 millimetres. The two positions of the index mark on the block *t*, for these extreme limits, are marked on the edge of the slot on the outer tube, 0 and 2, fig. 108; the interval being divided into twenty equal parts, one part will correspond with an axial motion of the camera lens of 0·1 millimetre.

A metal frame is attached to the back of the camera box, its rear surface coinciding with the picture plane. The inner edges of this frame are provided with a centimetre graduation; the middle marks (triangular file cuts) of the vertical sides of this frame designate the termini of the horizon line on the negative, while the middle notches of the two horizontal sides indicate the position of the principal line. When the instrument is in adjustment, the principal line will be

vertical, the horizon line will be horizontal, and their point of intersection will be the principal point of the photographic perspective. The opening of this metal frame is 17·8 by 22·8 centimetres, which is also the effective size of the pictures.

The two frames *I* and *II* in figs. 109 and 110 give the means at hand to make a light-tight connection between the single plate holders (or ground-glass plate) and the camera telescope. The short bellows *w*, connecting frame *I* with *II*, will admit the frame *II* to be moved a little while *I* remains fixed to the camera box. Each of these two frames is provided with two hooks, frame *I* having one upper hook h_1, figs. 107 and 108, and a similar hook near the lower corner diagonally opposite h_1. The hook h_2, fig. 108, is attached to the upper corner (opposite hook h_1) of frame *II*, which also has a similar lower hook diagonally opposite h_2 and directly under h_1.

Fig. 110 represents a partial section of the rear end of the camera, showing the ground-glass attachment *V*. Frame *II* is fastened to frame *I* by means of the upper left hook h_2 and the lower right hook.

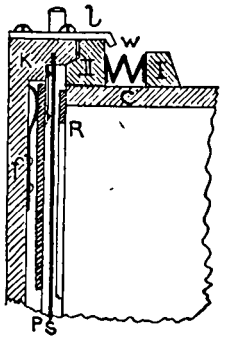

FIG. 109

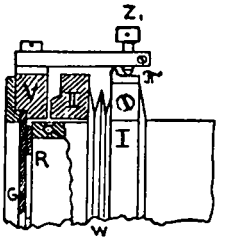

FIG. 110

The ground-glass frame *V* is supported by the screws z_1 and z_2, figs. 110 and 111, the points of which rest upon the metal plates π, figs. 108 and 110, attached to the permanently fixed frame *I*. The face of the ground glass *G*, fig. 110, is brought into contact with the rear surface of the graduated metal frame *R*, fig. 110, by means of the upper right and lower left hooks.

The ground-glass attachment *V* also has the eyepiece, which forms a telescope with the camera lens, converting the camera into a camera telescope. The position of the optical axis of the eyepiece may be adjusted vertically by turning the screws z_1 and z_2 until the line of collimation of eyepiece and camera lens fall together into the plane of the camera horizon (the camera lens being in its normal position, or the zero mark of the vernier *n* coinciding with the 70 mark of the scale *m*, fig. 107). In this position points on the horizon may be sighted through the eyepiece of the ground-glass attachment; but when the camera lens had been moved up or down some distance away from its normal position the eyepiece can no longer be used with its optical axis horizontal, and the stops p_1 and p_2, fig. 111, are now unfastened and the eyepiece is tilted up or down (rotating it about the horizontal axis x_1 x_2, fig. 111) until its optical axis is directed to the center of the object glass, when the image of the point to be bisected will appear well defined.

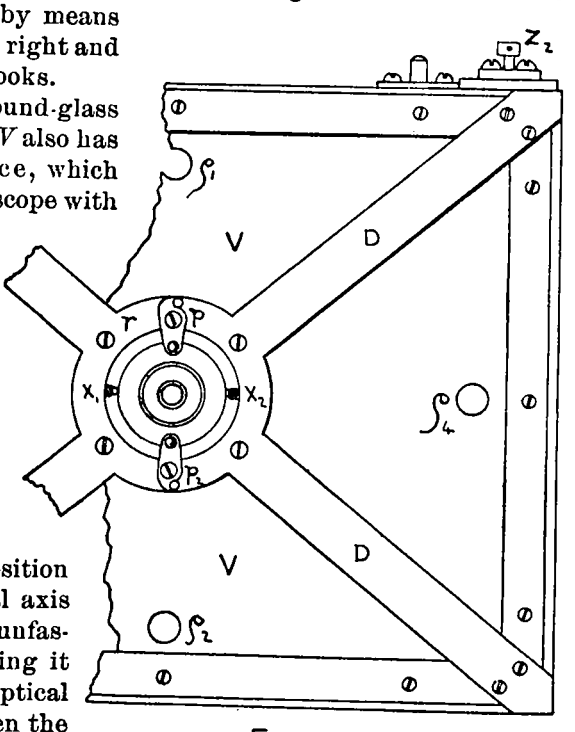

FIG. 111

The circular openings ρ, shown in the ground-glass attachment, fig. 111, serve to examine the middle notches of the inner edges of the sides of the graduated metal frame *R*, which define the horizon, and the principal lines of the perspective, thus giving the means to test the positions of those lines and to adjust the same, if necessary.

The outer wooden frame *V*, fig. 110, of the ground-glass attachment is strengthened with two metal diagonal ribs D_1, fig. 111, which are joined at their intersection by a ring *r*, the latter forming the support for the eyepiece, which may be revolved about the horizontal axis x_1 x_2, as has been already mentioned.

Each holder contains a single plate, and fig. 109 illustrates a section through the upper rear part of the camera box with a plate holder *K* in position:

P = dry plate; it rests at its four corners upon the springs *f*. *S* = hard rubber slide, which

is completely withdrawn when making an exposure of the plate. R = graduated metal frame permanently fixed to the rear end of the camera box C.

We will now describe how the plate holder is attached to the camera for exposing a plate:

Frame II is set free from frame I, and K is hung to the frame II by means of the bent plate l, fig. 109, when the beveled projecting edge of K closes into the rebate of frame II, producing a light-tight connection. K is now secured to frame II by the upper left and lower right hooks (which is the position shown in fig. 109). The hard-rubber slide S is now withdrawn, and the pair of hooks—upper right and lower left—are tightened to draw the holder K forward until the sensitive film surface is brought into contact with the graduated metal frame R at the back of the camera C, the springs f taking up any lost motion and insuring a perfect contact.

The lens is now uncapped, the exposure made, and the plate holder is withdrawn by repeating the same operations in the inverse order: unfastening the pair of hooks—upper right and lower left—inserting the slide S, and drawing back the last two hooks—lower right and upper left.

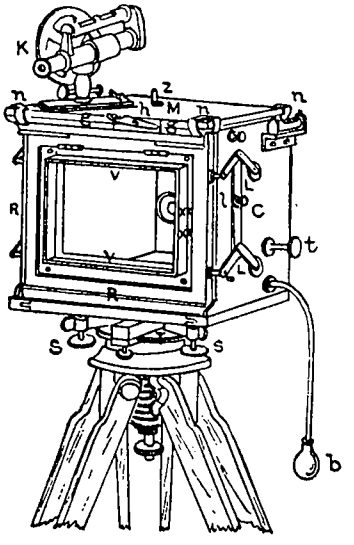

FIG. 112.

(8) *Captain Hübl's plane-table photogrammeter.*—This instrument is made by R. Lechner in Vienna, Austria, and it has been described in "Lechner's Mittheilungen aus dem Gebiete der Photographie und Kartographie," Verlag von R. Lechner (Wilhelm Müller) Graben 31, Wien.

The result aimed at in topography generally being the graphic representation of the terrene, Captain Hübl replaced the theodolite of the ordinary photogrammeter by a plane table with alidade, thus being enabled to plat the directions required for the orientation of the picture traces, as well as those needed for the location of the camera stations, directly in the field upon the plane table.

For this purpose the top M, fig. 112, of the camera C, (21 by 21 centimetres) is disposed for use as a plane table. It receives the paper sheet, which is held in position by four metal corner clamps n.

Fig. 113 shows the plane table (or upper surface of the camera) $a\,b\,c\,d$, which has two pivots, z and z', about which the ruler LL of the alidade K may be revolved in azimuth. If zf, fig. 113, represents the constant focal length, eg will be the horizontal projection of the picture trace. By placing the ruler LL of the alidade upon the pivot z the horizontal projections of horizontal directions emanating from z (representing the platted station point) as a center to those points of the perspective which serve to orient the picture may be drawn upon the paper between the sector $e\,z\,g$.

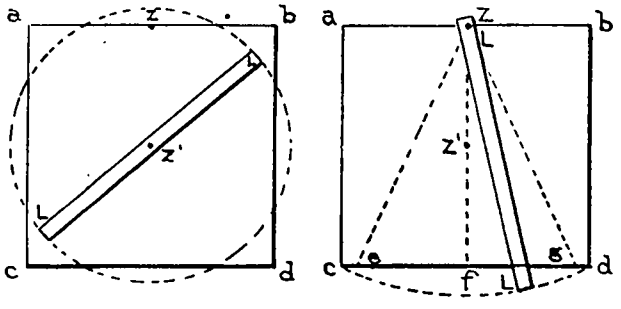

FIG. 113.

The central pivot z', fig. 113, serves as the vertical axis of rotation for the alidade ruler LL when drawing the horizontal directions to known points (signals over trigonometric stations, visible from the camera station) to locate the position of the station with reference to surrounding triangulation points. The line zf or $z'f$ represents the horizontal projection of the principal ray (or of the optical axis of the camera). It is the trace of the principal plane upon the horizontal-projection plane.

With reference to fig. 112:

c = camera box made of aluminum, with constant focal length. k = plane-table alidade, arranged for stadia reading, with vertical circle. z = pivot over second nodal point of the camera lens. z' = pivot vertically above center of instrument (in prolongation of the vertical axis of rotation for the camera or plane-table).

At *e* and *g*, fig. 113, are two stops representing the ends of the photographic field *ezg*, which is identical with the horizontal angle commanded by each plate.

The lever *h*, fig. 112, serves to locate the principal point *f*, fig. 113; when the edge of the ruler *LL* abuts against the upturned lever *h*, and the principal ray *zf* (bisecting the angle *ezg*) may be drawn upon the plane-table sheet.

With reference to fig. 112: *b* = rubber bulb for operating the pneumatic shutter of the camera. *t* = head of pinion which serves to elevate or depress the camera lens, the change from the normal position of the lens being read on a scale with vernier. *n* = spirit level, two being provided (at right angles) for adjusting the instrument. *R* = movable plate carrier. *LL* = lever for moving the plate carrier *R* forward (toward the lens) until the sensitive surface of the plate is brought into contact with the graduated metal frame *vv*.

The horizon and the principal line may be located upon the perspectives by means of the centimetre graduations on the inner edges of the metal frame *vv*, or two fine wires may be attached to the corresponding points of the graduation.

The camera is supported by the three leading screws *s*, their upper ends resting in three slots of the lower face of the camera box. The latter is firmly united with the tripod head by means of a central clamp screw with spiral spring. *T*=graduated horizontal circle with clamp screw. It serves to enable the observer to turn the camera by an equal amount in azimuth after each exposure. *xx*=correction screws to adjust the graduated metal frame *vv* to bring the principal point into the optical axis of the camera lens.

The plane-table *M*, with alidade *K*, serves to locate the camera station in both the vertical and horizontal sense. If the camera stations are not very close together, the plane-table may also serve for the location of tertiary points and for the sketching of details.

This photographic plane-table is well suited for topographic reconnaissance surveys. The results obtained by means of the same may not be as precise as those obtained with the more complicated and refined phototheodolites, but it is more easily transported, is very simple in manipulation, and the adjustments are not liable to be easily disturbed. The instrument is compact, well conceived, and excellently executed.

The size of the photographic plate is 12 by 16 centimetres, giving an effective picture within the graduated margin of 10 by 14 centimetres.

The cube-shaped camera has sides of 21 centimetres length, and weighs 3·5 kilograms. The packing case, including the entire outfit and stout tripod (three folding legs), weighs only 11·5 kilograms. The cost in Vienna of the complete instrument is 400 florins.

V. PANORAMIC CAMERAS.

The lenses of the older surveying cameras gave correct perspectives only for small angles, rarely exceeding 30°, and Martens, in Paris, was probably the first to devise a so-called panoramic camera to photograph larger sections of the horizon on one plate, even with lenses that ordinarily would cover but a small angular field.

If the objects to be photographed are far enough distant to permit the use of a constant focal length of lens for the picture, and if the lens may be rotated about a vertical axis passing through the second nodal point of the lens system, such panoramic views may be obtained upon a sensitized surface bent into a half cylinder whose radius equals the constant focal length of the lens and whose axis coincides with the vertical axis of rotation of the camera lens.

The topographic cylindrograph of R. Moessard.—The following-described apparatus has been devised by R. Moessard (commandant du Génie, attaché au service géographique de l'armée), of St. Cyr, France.

The hemicylindrical camera box, fig. 114, rests upon a tripod, with three leveling screws to adjust the verticality of the axis of revolution *aa* of the camera lens *O*, which axis coincides with that of the half cylinder formed by the sensitized surface of the film. The latter may be replaced by a half-cylindrical ground-glass plate.

The camera lens *O* may be rotated by hand about *aa*, using the sight ruler *S* as lever. By viewing the landscape through the sights *PP'* of the lever *S*, the proper timing for the exposure

of the different panorama sections may be estimated. The space between the lens O and the frame RR is filled in with a light-tight fabric, allowing full play for the rotating objective O.

The upper surface of the topographic cylindrograph is provided with an azimuth compass C and a pair of cross levels A and B. The bent frame forming the guide for the sensitive film has graduations on the inner edges, which form the margins of each panoramic view.

The divisions of the upper and lower (horizontal) scales correspond to degrees in arc, while the divisions of the vertical sides are graduated to read $\frac{f}{100}$, where f = constant focal length of the lens O = radius of the cylindrical sensitive surface of the film.

Four movable indices are provided, two, H and H', fig. 115, serve to mark the horizon line of the half panorama, and the other two, N and E, indicate the magnetic north-and-south line and the magnetic east-and-west line for each half panorama, the compass C, with the sight ruler S, giving the means for properly setting the index marks N and E for each view. Thus the magnetic azimuths of horizontal directions may be taken directly from the pictures.

The vertical angles are readily

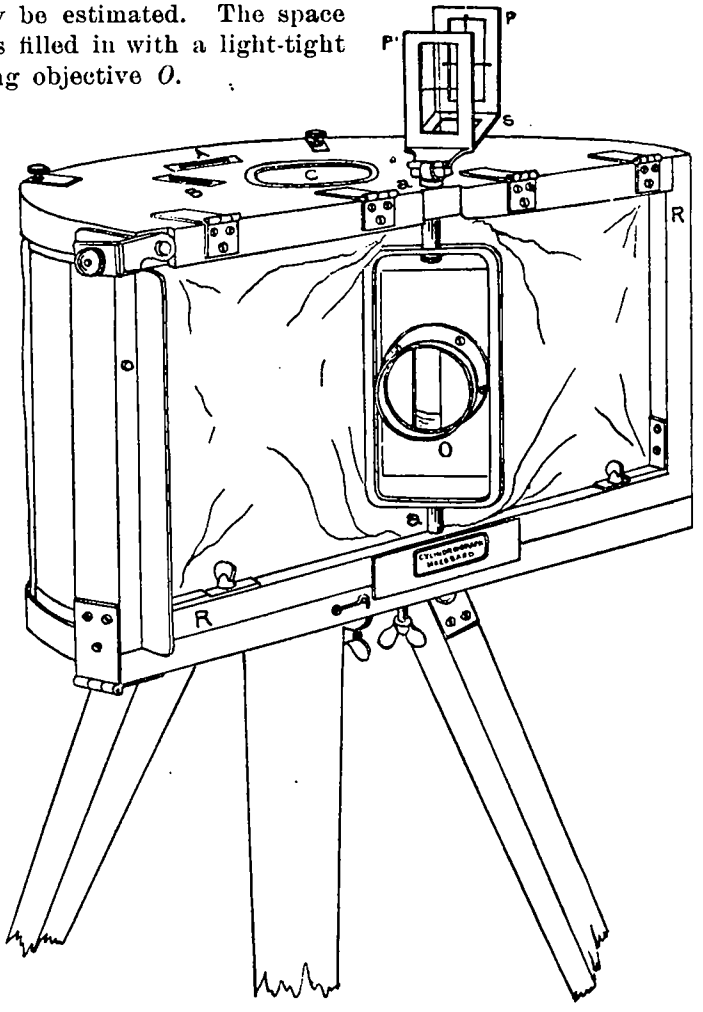

FIG 114

found by means of the ordinates of pictured points (above or below the horizon line HH') measured in one-hundredths of the focal length f, using the photographed scales on the vertical margins of the pictures for this purpose.

For example: The angle of depression of the ray Oa (to the base of the pictured tree a), fig. 115, may be found from

$$\tan \beta = \frac{aa'}{f}$$

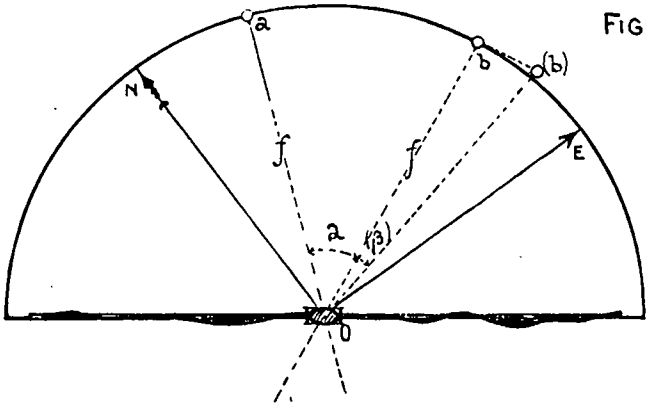

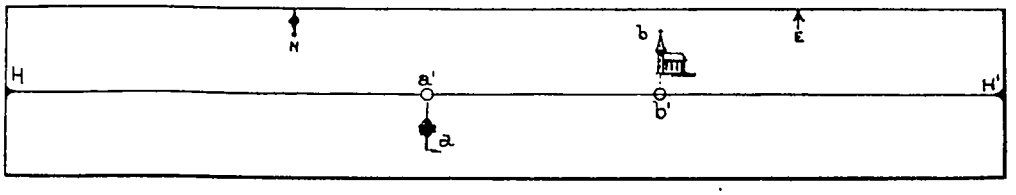

FIG.115

or when aa', measured on the side scale, is found to be equal to 25 divisional parts:

$$\tan \beta = \frac{aa'}{100} = 0.25$$

To determine whether the levels A and B, fig. 114, read zero when the cylindrical film is vertical, and also to ascertain whether the index marks H and H', fig. 115, representing the horizon line, are correctly placed, we may proceed as follows:

A theodolite, fig. 116, is set up about 10 or 15 metres behind the cylindrograph (after the back of the camera had been removed to bring the index marks H and H' into view), and both instruments are leveled. After bisecting the upper edge of the cylindrograph the telescope of the theodolite is moved in azimuth, when the bisection should continue. The same should be the case for the lower surface edge of the cylindrograph after depressing the telescope of the theodolite to bisect that edge. Does this not take place, the cylindrograph will have to be adjusted by means of the leveling screws until the bisection takes place, when the level A is to be changed to read zero for this position of the cylindrograph.

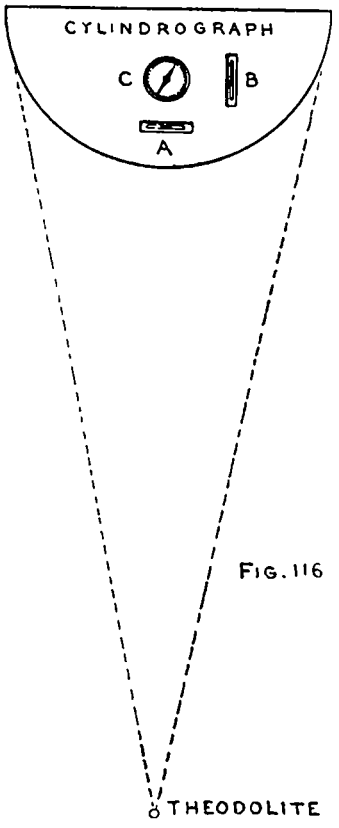

FIG. 116

The theodolite is now set up in the direction of the level A, at one side of the cylindrograph, and the level B is adjusted in the same manner as just indicated for A.

To adjust the indices H and H' into the horizontal plane (containing the optical axis of the adjusted cylindrograph) a comparison may be made on a cylindrograph picture, showing several points of known elevations, the elevation of the cylindrograph being also known, or the theodolite may be set up with the horizontal telescope at the same elevation with the optical axis of the adjusted cylindrograph. The horizontal telescope of the theodolite is now moved in azimuth until a well-defined point is bisected, which point may be identified on the ground glass of the cylindrograph. The image of this point on the ground glass is marked and the cylindrograph is moved in azimuth, marking the image on the ground glass in two more places. A (horizontal) line passing through these marked points should pass through H and H'.

The objective O is attached to a funnel-shaped box within the camera, permitting the simultaneous exposure of a vertical strip of film having a width of but 62 millimetres. Points of the film that would be pictured outside of this strip can not be acted upon by the light unless the objective is revolved about the axis aa.

After the time needed for the correct exposure of this strip (of 62 millimetres width) has been ascertained, the correct exposure may be given the entire semicylinder by moving the sight ruler S with a quick and uniform motion about aa from one extreme end of the film to the other.

The semicylindrical film being 860 millimetres long, each strip of the film would then have been exposed the sixty-two eight hundred and sixtieth part of the time required to make one full revolution of the objective. If one complete revolution required ten seconds, and if the correct exposure for the strip was found to be five seconds, each strip would have received an exposure of $\frac{10 \times 62}{860}$ seconds $= 0.72$ second. To give each strip the required exposure of five seconds the entire revolution of the lens should be repeated $\frac{5}{0.72}$ times in succession, or about seven times, each complete revolution taking ten seconds.

As yet these instruments are not made sufficiently precise to be recommended for phototopographic surveys. The conception of this instrument, however, is ingenious, and where the question of transportation need not be considered the topographic cylindrograph in a more perfected form may give good results for surveying purposes.

CHAPTER V.

ICONOMETERS AND PERSPECTOGRAPHS.

We understand under iconometers a series of instruments that have been devised to simplify the constructions of phototopographic platting (iconometry).

After two drawing boards have been covered with paper (gummed down on the edges) both sheets are provided with a chart projection upon which all trigonometric (triangulation) points are platted and their elevations inscribed.

The constructions incidental to the iconometric platting of the phototopographic survey may be divided into three classes:

First. The platting of all horizontal directions, that had been observed instrumentally, for the location of the camera stations and for the orientation of the panorama views.

Second. The determination of the horizontal projection of points pictured on three or more photographs taken from different stations.

Third. The determination of the elevations of the various camera stations and tertiary points (that are located iconometrically) to facilitate the platting of the horizontal contours of the terrene.

The principal instruments used for the iconometric platting of the phototopographic survey in Italy have been described in Appendix No. 3 of the United States Coast and Geodetic Survey Report for 1893. They are:

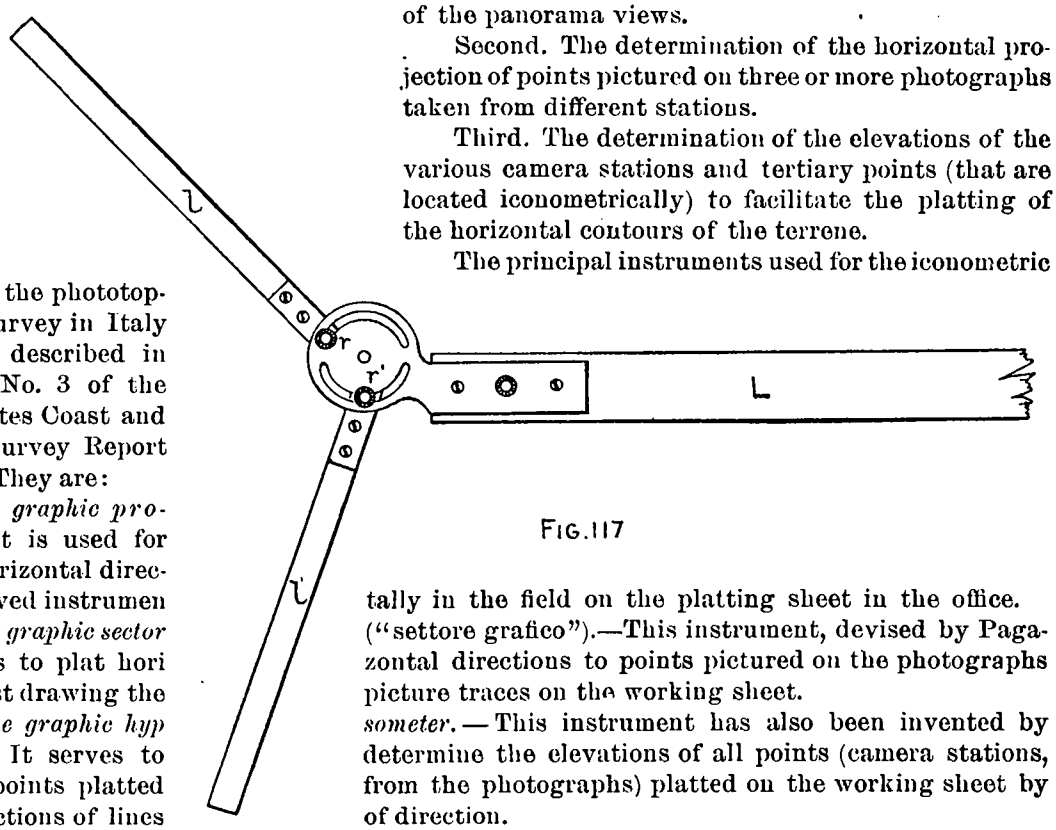

FIG. 117

I. *The graphic protractor.* — It is used for platting horizontal directions observed instrumentally in the field on the platting sheet in the office.

II. *The graphic sector* ("settore grafico").—This instrument, devised by Paganini, serves to plat horizontal directions to points pictured on the photographs without first drawing the picture traces on the working sheet.

III. *The graphic hypsometer.* — This instrument has also been invented by Paganini. It serves to determine the elevations of all points (camera stations, as well as points platted from the photographs) platted on the working sheet by the intersections of lines of direction.

IV. *The centrolinead.*—Reference has been made to this instrument under the description of the Canadian photograph board. Captain Deville uses this instrument for drawing lines to a vanishing point falling outside of the limits of the platting sheet.

The distance between the principal point and the vanishing points of lines increases the nearer parallel to the picture plane such lines are. Lines parallel with the picture plane have their vanishing point at infinite distance from the principal point; practically they have no vanishing point. Their perspectives are parallel with the original lines.

It often occurs in iconometric platting that the vanishing points of some lines fall outside of the limits of the drawing board, and, in order to draw a line which, if produced, would pass through the distant vanishing point, special constructions would have to be made to locate the direction of such a line.

This instrument, fig. 117, is used instead of making such auxiliary constructions on the photograph board. It is composed of a wooden straightedge, *L*, and two wooden movable arms,

l and l', which may be given any inclination against the straightedge L. The clamp screws, r and r', serve to fix the arms l and l' permanently in any position.

The photograph board, fig. 70, is provided with four points, A, B, C, and E, indicating the centers of the studs against which the arms l and l' play or rest when the centrolinead is used on the photograph board. The distance between the studs may vary, but each two forming a pair are generally placed from 6 to 8 inches apart, and, the arms of the centrolinead being held in contact with the studs, the various directions of the ruler L will intersect each other in one common point.

With reference to fig. 118 we have:

A and B = one pair of studs permanently fixed upon the photograph board. OA and OB = movable arms of the centrolinead, now clamped in the position given them in the figure. OC = ruler of the centrolinead (= L in fig. 117).

If we describe a circle through the three points A, O, and B—the angle AOB remaining constant—the angle AOB will be an angle of the periphery AB for any position given the ruler OC (= L, fig. 117) as long as OA and OB (l and l', fig. 117) remain in contact with the studs A and B. When OC is changed to assume the position $O'C'$ the intersection, V, of the two lines OC and $O'C'$ will also be on the periphery of the circle because the angle AOV ($AO'V$) remains the same and must subtend the same arc AV as long as the studs A and B remain unchanged. Hence, for the assumed position of the studs the directions of all lines drawn along the fiducial edge of the ruler OC (giving O all positions on the arc AOB) will pass through the point V—they will vanish at V.

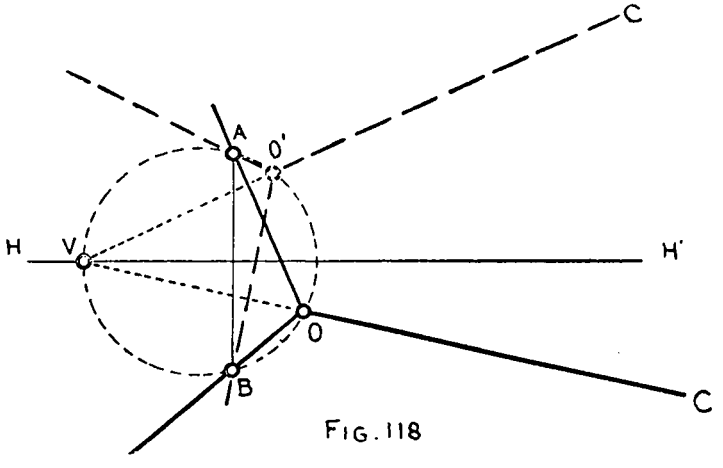

FIG. 118

In the iconometric work of the Canadian surveys the centrolinead is used only for drawing the perspectives of horizontal lines, their vanishing points being on the horizon line. The studs A and B are placed on the photograph board on a line AB, perpendicular to the horizon line and at equal distances from the latter. The horizon line HH' (DD' in fig. 70) becomes a diameter of the circle $AOBV$, and $VA = VB$. If the movable arms of the centrolinead include the same angles with the direction of the fiducial edge of the straightedge, the line OC, bisecting the angle AOB, must pass through V midway between A and B.

The distance of the vanishing point, V, from the principal point, P, may be varied at pleasure by changing the inclination of the arms, l and l', against the direction of the fiducial edge of the ruler L. When the direction of the arms l and l' falls together and is perpendicular to L, the vanishing point will fall at infinite distance from the principal point P and the lines drawn along the fiducial edge of the straightedge L will become parallel with the horizon line HH'.

The distance of the vanishing point V from P may also be varied by changing the distance between the studs A and B or C and E, fig 70—increasing this distance will enlarge the circle $AOBV$ and V moves farther off from P, reducing that distance will decrease the diameter of the circle $AOBV$ and V will approach the principal point P. The practice in Canada, however, is to retain the position of the studs unchanged on the photograph board and to change the inclination of the arms l and l' of the centrolinead instead.

If we gradually close the arms l and l', V will approach the line AB and when the angle AOB becomes equal to 90° the arc AOB will have become a semicircle, and the intersection of AB with HH' will be the center of the circle $AOBV$, the distance of both O and V from AB will be equal to $\frac{AB}{2}$, continuing to close the arms l and l', V will approach closer to AB without ever reaching it.

(1) *To set the arms (l and l') of the centrolinead if the direction to the vanishing point (V) is given by a line in the ground plan.*

With reference to fig. 119 we have:

P = principal point on the photograph board. A and B = positions of the studs. Sv = given direction of the line on the ground plan, when V will be the vanishing point for that line.

We revolve the picture plane about the horizon line, as axis, into the horizontal platting plane when the station may fall in S, fig. 119, SP being then the distance line or focal length projected into horizontal plan. Should the point V fall upon the drawing board we could describe a circle through AB and V and place the fiducial edge of the centrolinead's straightedge upon DP (upon the horizon line) with the axis of rotation O of the arms l and l' in D upon the circle, then bring the arms l and l' into contact with the studs A and B and clamp them in this position. Still, in this case there would be no use for the centrolinead, the point V being accessible.

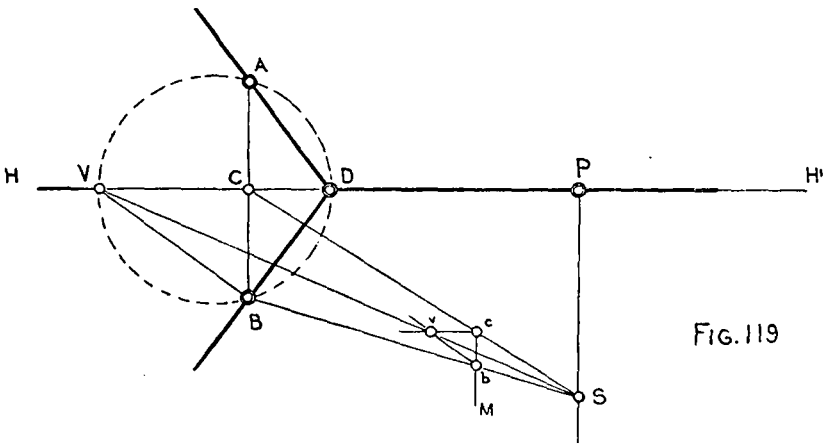

FIG. 119

To set the arms for an inaccessible point V we again refer to fig. 119. Join the points V and B, the angle VDB—the inclination of the lower arm l' against the ruler L—is equal to VBA, both angles subtending equal arcs of the same circle. Draw the lines CS and BS. At any point c on CS draw cM and cv parallel to AB and DP and join b and v. By reason of similarity of triangles, vb must be parallel to VB and the angle

$$vbc = VBC = BDV.$$

Hence, the arms of the centrolinead may be set in the case under consideration by placing the ruler L on Mb, the axis of rotation, O, coinciding with b, and adjusting the lower arm l' of the centrolinead to coincide with bv. The other arm l, having the same inclination against the ruler L as the arm l', may be set by placing the ruler L upon the horizon line DP and moving it along this line until the lower adjusted arm l' comes into contact with the stud B, then moving the other arm l about O until it comes into contact with the stud A and clamping it also.

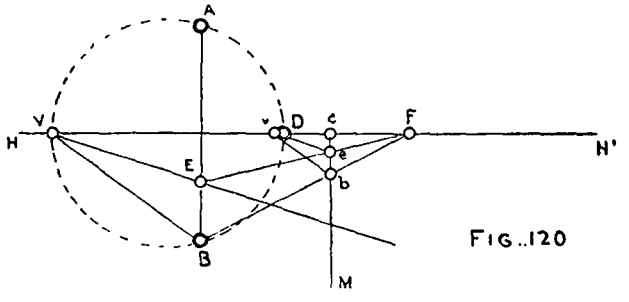

FIG. 120

The lines BS, CS, Mc, and cv are drawn once for all upon the photograph board, fig. 70. The only line to be drawn for setting the arms of the centrolinead is Sv, which is the direction of the given line on the ground plan. The line bv need not be drawn, the points b and v being located by drawing cv parallel with the horizon line and cM or cb parallel with the distance line SP.

(2) *To set the arms of the centrolinead, if the given line VE belongs to the perspective:*

Take any point F, fig. 120, on the horizon line, join F with E and F with B, then draw cM parallel to AB. Through c draw ev parallel to EV and join vb. Owing to the similarity of triangles vb will be parallel with VB and the angle $vbc = VBA$, which is the inclination of the arm against the ruler L of the centrolinead.

FB and cM are permanently drawn on the photograph board, but FE and ve will have to be drawn for every given line. In this case two lines will have to be drawn instead of one, as in the preceding case.

Centrolineads are usually sold in pairs; one serves to work on the left side of the principal point and the other on the right side.

V. The perspectometer (as used by Capt. E. Deville).—The perspectometer is used to dispense with the construction of the squares on the perspective when applying the "method of squares" (Chapter I, Paragraph IX) to draw a figure in the ground plan by means of its perspective.

On a thin, transparent film (glass, xylonite, isinglass, horn, etc.,) two parallel lines AB and DD', fig. 121, are drawn intersecting the common perpendicular pP. Make $DP=PD'=pA=pB=$ distance line (focal length) and from p lay off on AB (to both sides of p) equal distances:

$$pm=mn=no \quad . \quad . \quad . \quad . \quad . \quad . \quad . \quad =pm'=m'n'=n'o'= \quad . \quad . \quad . \quad . \quad . \quad . \quad .$$

Join these points of division to P and draw lines through the corresponding intersections of the radials from P with the perpendiculars AD and BD', rr', tt' . . . . . which lines will be parallel with AB and DD'.

The use of the perspectometer.—The perspectometer is placed upon a perspective with P on the principal point and DD' coinciding with the horizon line. The ground line of the perspective may fall in XY, fig. 121, it will be divided into equal parts by the radials from P, and the trapezoids of the perspectometer represent the perspectives of the squares in the ground plane having the equal parts on XY as sides.

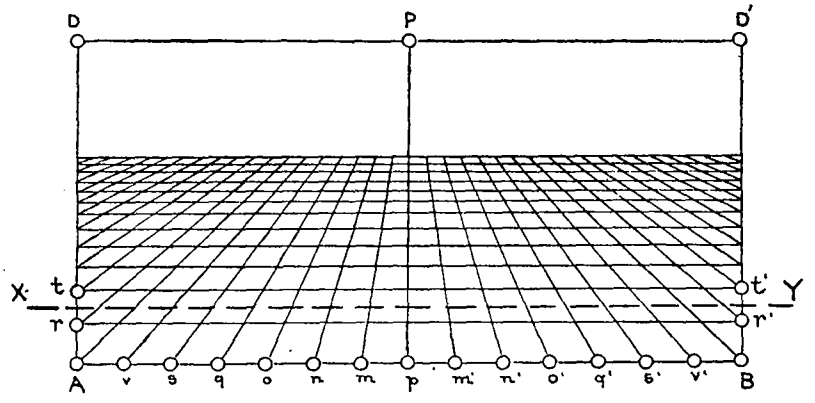

FIG. 121

By placing the perspectometer on the perspective in the manner indicated above the squares covering the perspective of the figure that is to be platted iconometrically on the ground plan are at once apparent, and only those required for the drawing of the figure in question are drawn on the ground plan.

The sides of the squares to be drawn on the ground plan (their side lengths are equal to the divisions on the ground line between the radials drawn from P) are laid off from the trace of the principal plane on the ground line, and the position of the front line nearest the picture trace (or ground line) is laid off on the ground plan either by estimation or construction. The estimation of the position of this line (corresponding to tt') on the ground plan is made by noting the fraction of a square's side which represents the distance (between tt' and XY, fig. 121) from the ground line on the perspective.

The same perspectometer serves only for perspectives which have the same distance line (like photographs of distant objects taken with the same lens), different distance lines requiring different perspectometers.

The width $p\,P$ should be equal to the height of the horizon line above the foot of the picture; the radials from P need not extend beyond the width of the picture, the distance points D and D' having been taken as the limit of the perspectometer in the figure (121) merely to show more fully the principles involved in its construction.

The length of a single division on the line AB should be selected with reference to the resulting equal division lengths of the lowest ground line used for the pictures, as the dimensions of the division lengths on the latter give the measure for the sides of the squares to be drawn on the ground plan.

These division lengths on the ground line should be in harmony with the scale of the plan and with the degree of accuracy that may be required for the delineation of the topographic features. The smaller the size of the squares is selected on the ground plan the more accurately the transfer of the figure from its perspective to the ground plan may be made, the same principles being involved in this method of iconometric platting as in the well-known method of reducing drawings by means of two sets of (hair) squares, the ratio of their sides corresponding to the scale of the required reduction.

Captain Deville recommends the perspectometer to be made by first drawing it on paper in a fairly large scale, and then making a negative of it, reduced photographically to the desired size of the finished perspectometer. A positive copy may now be made on a transparency plate, which, if bleached in a solution of bichloride of mercury, will show white lines on clear glass. For the sake of better preservation such perspectometer, when completely dry and hard, should be varnished.

When using the perspectometer for transferring figures from their perspectives to the ground plan, when such figures are situated in planes perpendicular to the picture plane but inclined against the horizon plane, the center of the perspectometer is placed upon the principal point P of the picture plane, the same as before, but the perspectometer is now revolved about P until the parallel lines of the same are parallel with the trace of the inclined (figure's) plane on the picture plane. In this case the trapezoids of the perspectometer represent the perspective of a net of squares situated in the inclined plane, the squares of which are now to be projected into the ground plane.

This net of squares in the inclined plane, when projected into the ground plane, will be composed of rectangular figures of equal size, their long sides being in a direction at right angles to the picture trace (or ground line) and of a length equal to that which is intercepted between two adjoining radials of the perspectometer on the trace of the inclined plane (on the picture plane), while the short sides of those rectangles (forming the projection in the ground plan of the squares in the inclined figure's plane) will be equal to the lengths obtained on the ground line by projecting the points of intersection of the radials of the perspectometer with the inclined plane's trace on the picture plane upon the ground line of the picture plane.

The construction of the rectangular net on the ground plan may now be made in an analogous manner to that mentioned for the squares, and the drawing in of the figure on the ground plan with reference to its position within the trapezoids of the perspectometer is accomplished in the usual manner.

Should the figures be situated in planes that are inclined to both the picture and the ground planes, then the figure is first projected upon a plane perpendicular to the picture plane, and having the same trace in the latter as the inclined plane.

VI. The perspectograph.—Numerous instruments have been devised for drawing perspectives from plans or from nature, mechanically, or by means of optical devices, some of which may inversely become of use for transcribing perspectives of figures into orthogonal projections.

The perspectograph, invented by H. Ritter, serves to construct the orthogonal projection of a plane figure from its perspective, or to draw the perspective from the plans of the object without referring to the object itself.

Ritter's instrument, manufactured by C. Schrœder & Co., in Frankfort-on-the-Main, has been patented in Germany, October 13, 1883, under No. 29002. It was devised primarily for architectural purposes.

This instrument in its present form, composed largely of wood, is not well suited for surveying purposes, as it contains too many sources of error due to lost motion in its bearings, still, its theory being sound, there is no reason to question its ultimate value, even for precise work, if it were carefully made by an expert mechanician (excluding the use of wood and using metal throughout), being guided in its construction by the demands of the greatest precision attainable. As a carefully constructed instrument based on the present pattern may become useful in platting the data of a topographic reconnaissance where, in the nature of the work, rapidity in making the results practically available is of greater importance than a high degree of accuracy, the following description of this instrument may not be out of place here. For its methods of use in phototopographic surveying we respectfully refer to Capt. E. Deville's work on "Photographic Surveying" already mentioned.

We have seen (Chapter I) that the platted position of a point in the ground plan may be found from its perspective (in vertical plane) by locating the point of intersection of the horizontal projection of the ray: "station—pictured point" with the line of direction itself. (The latter with its vertical plane is revolved about the trace of the vertical plane in the ground plane (as axis of rotation) into the ground plane in which plane the point of intersection is located.)

With reference to fig. 122 we have:

S = camera station or point of view. μ = perspective (image) of a point M, to be platted in the ground plan. s = foot of the station S. XY = ground line of the picture plane (vertical) MN. M = platted position of the point M in the ground plane GG.

If we draw through the foot of the station s a line parallel to the ground line XY, and make its length s (S), equal to sS, join (S) and the platted point M, then it will follow from the similarity of the triangles $O\mu M$ and sSM that:

$$sS : O\mu = Ms : MO$$

From the similar triangles $s(S)M$ and $O(\mu)M$ we find

$$s(S) : O(\mu) = Ms : MO$$

hence

$$s(S) : O(\mu) = sS : O\mu$$

Having made $sS = s(S)$, the last equation can only prevail if $O\mu = O(\mu)$.

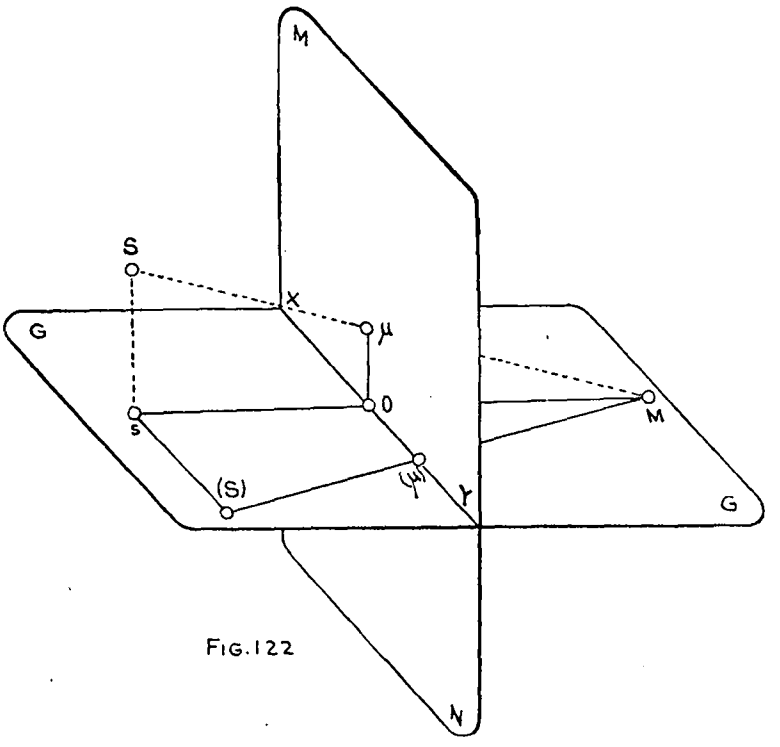

FIG. 122

To find, therefore, the perspective μ of a point M, given on the ground plan, we first draw a line s (S) through the platted station in the ground plane parallel with the ground line XY, making $s(S)$ = height of the station S above the ground plane. Draw the lines sM and $(S)M$, which will intersect the ground line XY, in O and (μ), fig. 123. On the ground line $X'Y'$, drawn in another place of the working sheet, we assume a point O', representing O of the ground plan, and erect $o\mu$ perpendicular to $X'Y'$ in O' and make $O'\mu = O(\mu)$, when μ will be the perspective of M in the reverse position of the perspective. The perspective of any other point, N, given on the ground plan may be found in the same way, making $O'Q' = OQ$ and $Q'v = Q(v)$.

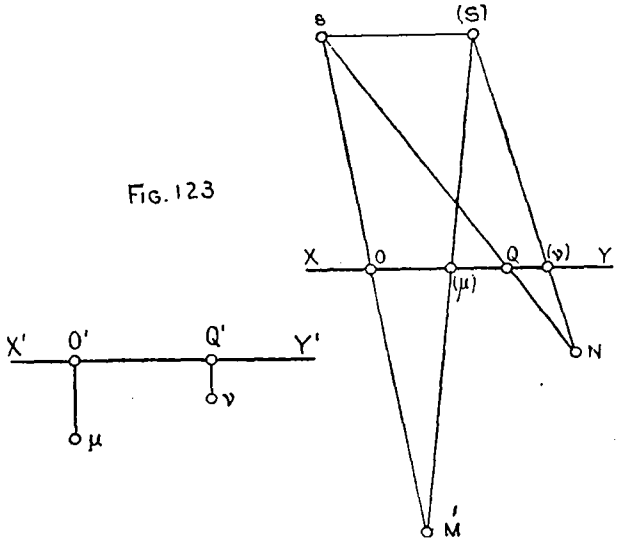

FIG. 123

Ritter devised the perspectograph to perform this construction, illustrated in fig. 123, mechanically.

Fig. 124 illustrates the general arrangement of Ritter's perspectograph. sM and $(S)M$ = two slotted wooden arms carrying the tracer, M, at their point of intersection.

The connections at s, O, (S), and (μ) are such that the rulers sM and $(S)M$ may slide through these points. The slide connections, s and (S), may also be moved along the groove or slot of the wooden ruler RT. The sliding piece O is secured to a rod which in turn may slide in the groove of the wooden ruler XY, being connected at its other end D with a system of arms or levers joined together after the manner of a pantograph. The distance OD is maintained unchanged while the instrument is in use.

The center of s is placed directly upon the point that marks the platted camera station on the ground plan. The ruler RT is placed parallel to the ground line of the picture plane, and s and RT are now secured in this position on the ground plan.

When the arm sM is moved, s being held in a fixed position (to coincide with the platted station point), the point O will follow the motions of the arm sM, also applying its motion directly to the arm OD (which slides in the groove of XY) and indirectly to the arms of the pantograph system.

The fourth sliding piece (μ), being connected with the joint A of the pantograph system by means of a separate piece, insures a permanently fixed distance between (μ) and A while the instrument is in use.

The pantograph system is composed of six pieces: Four straight arms, AB, AC, $F\mu$, and $F\mu'$ and two double arms or levers, CDE and BDG, which are bent at right angles at their points of junction D. The sides of the two parallelograms $ABCD$ and $DGFE$ are all of equal lengths, and the six arms are joined in A, B, C, D, E, F, and G. The arms $F\mu$ and $F\mu'$ are twice as long as the length of the side of the parallelograms.

The pencil which describes the perspective may be attached to the free end of either arm $F\mu$ or $F\mu'$.

The angles GDB and EDC being each equal to 90°, the sum of the two other angles CDB

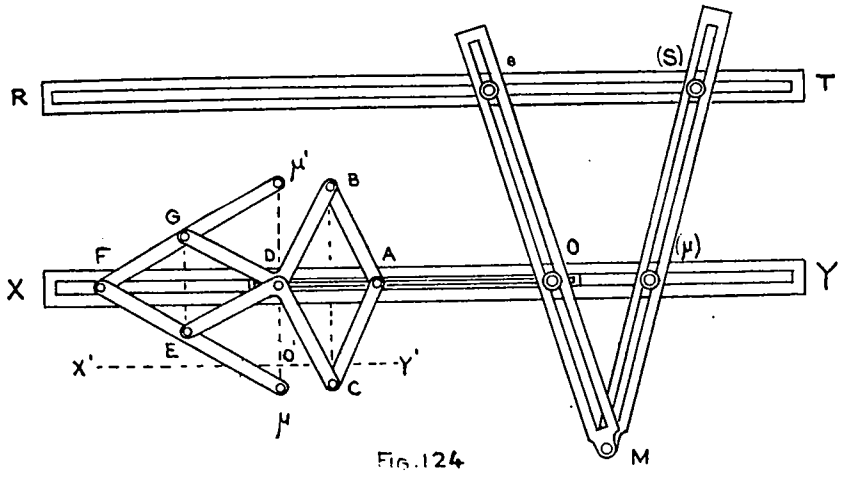

Fig. 124

and GDE must be equal to 180°, and as the sum of two adjacent angles in a parallelogram is equal to 180°, it follows that

$$CDB + GDE = CDB + DCA$$

or:

$$GDE = DCA$$

This shows that the two parallelograms $FGDE$ and $CDBA$ must be equiangular, and as their sides are equal in length, the parallelograms themselves must be equal, and the diagonals FD and GE of the one are equal to BC and AD of the other, respectively.

The two long arms $F\mu'$ and $F\mu$ being of equal lengths, $\mu\mu'$ will be parallel to GE, both will be perpendicular to the direction of XY, and $\mu\mu'$ will pass through D. We have, therefore, $D\mu' = D\mu = GE = DA$.

Use of the perspectograph.—The sliding piece s is secured to the working board, over the platted position of the camera station on the ground plan, still permitting a gliding movement of the arm sM in the direction sM (fig. 124). The center line of RT is brought into a position parallel to the platted ground line, and its position is also secured to the board. The sliding piece (S), finally, is moved from s (in the groove of RT) until s (S) is equal to the elevation of the station S above the ground plane, also securing (S) in this position, when it will still permit a gliding movement of the arm (S) M in the direction of (S) M. The center line of the wooden ruler XY is placed upon the ground line (picture trace) on the ground plan.

The manipulation of the instrument and its general working will now readily be understood.

For instance, when the tracer M is moved in a direction parallel to RT or to XY, the arm sM will move the slide OD in the same direction. The distance $O(\mu)$ remaining unchanged—as long as s (S) undergoes no change—(μ) A will also remain of a constant length. Hence, AD and also GE, as well as $D\mu$, undergo no changes, and the pencil in μ or in μ' will trace a line parallel to XY, representing the perspective of a line of the ground plan (the one traced by M) parallel to the picture plane.

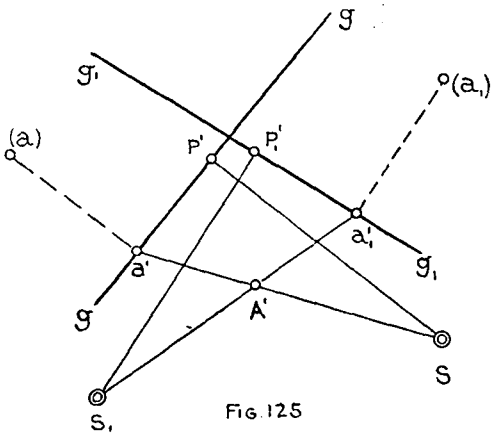

Fig. 125

When M is moved in the direction of sM, away from XY, the positions of O and D remain the same, but $O\mu$ will be lengthened, (μ) moves to the right, or away from O, carrying the point A with it (A (μ) being a constant length) and increasing the length of the diagonal DA in proportion to the increase of the length of O (μ). DA being equal to $GE = D\mu$ $(D\mu')$, the latter will also be lengthened, and μ will be moved down, or away from XY, by the same amount as (μ) is moved to the right. The relation between the construction made in fig. 123 and the mechanical platting by means of the perspectograph will now be evident.

VII. Professor Hauck's trikolograph.—This instrument has been described by Dr. G. Hauck in a memorial commemorating the opening of the new building of the Royal Technical High School at Charlottenburg, near Berlin, November 2, 1884. It serves to reconstruct an object from two perspectives of the same that had been obtained from two different points of view.

The principles which underlie the construction of this instrument hold equally good for the construction of an instrument to be used for the mechanical platting of the ground plan of any object represented on two photographs obtained from different stations.

In 1887, Prof. F. Schiffner already suggested the changes to be made to Dr. Hauck's instrument, in order to render it available as an instrument of precision for the use of the phototopographer; still it seems that mechanical difficulties in its manufacture are yet to be overcome, as the writer has not met with any record of such a perfected instrument having been either in use or even been constructed.

In Chapter I it had been shown that a point, A, photographed from two stations S and S_1, may be platted in horizontal plan, if the two picture traces, gg and g_1g_1, and the two camera stations, S and S_1, are given on the horizontal plan, fig. 125.

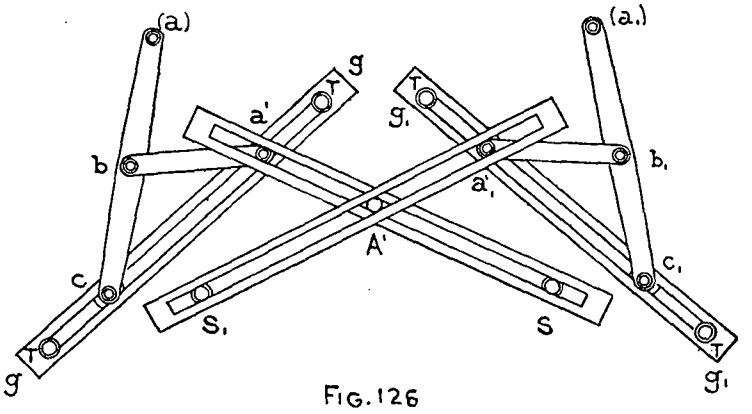

Fig. 126

The two picture planes may be revolved about their ground lines, gg and g_1g_1, into the ground or platting plane, when (a) and (a_1) will be the two images of the point, A, revolved into the ground plane. If we draw lines through (a) and (a_1) perpendicular to the corresponding ground lines gg and g_1g_1, then a' and a_1' will be the (horizontal) projections of the picture points, a and a_1, into the platting plane, and the intersection, A', of the radials Sa' and S_1a_1' will locate the positions on the platting sheet of the point A, pictured on the two plates as a and a_1, respectively.

This graphic determination of the platted position A' of the point A may be accomplished mechanically by placing slotted rulers with their center lines upon gg and g_1g_1, fig. 126, and indicating the directions of the perpendiculars, dropped from the pictured points (revolved into the horizontal plan) upon the ground lines, by two arms (a) bc and $a'b$ of a pantograph combination, where

$$(a)b = bc = a'b$$

or

$$(a_1)b_1 = b_1c_1 = a'_1b_1$$

The points $(a)a'$ and c will always be situated on the periphery of a semicircle described about b as the center, and, as the points c and a' are permanently held on the line gg, the angle $(a)\,a'c$ (angle of the periphery subtending the semicircle) will be equal to 90° for all inclinations that may be given $(a)c$ against gg. The directions of the radials Sa' are laid down mechanically by means of two slotted rulers Sa' and $S_1a'_1$, held in position by the studs in S and a' (and S_1 and a'_1, respectively), both rulers being revolvable about the fixed points S and S.

This instrument, of which the characteristic features are illustrated in fig. 126, performs the constructions mechanically that were made graphically or geometrically in fig. 125.

The slotted rulers gg and g_1g_1 are secured to the platting board (their center lines on the picture traces) by means of thumb tacks T. The pantograph arms $(a)\,c-(a_1)c_1-$ and $a'b-(a'_1)\,b_1-$ are connected with these rulers by means of sliding joints c (and c_1) and a' (and a'_1), while the studs which mark the stations S and S_1 end in cylindrical projections that fit into the slots of the rulers Sa' and $S_1a'_1$, the latter fitting also over similar cylindrical attachments to a' and a'_1, in such a way that the rulers Sa' and $S_1a'_1$ may freely glide over the points S and a' (or S_1 and a'_1) and at the same time may revolve about the fixed points S and S_1, respectively.

The points (a) and (a_1) are provided with tracers, and a pencil slide is attached to the intersection of the rulers Sa' and $S_1a'_1$ (in A') in such a way that the pencil point may freely slide either way in the grooves of Sa' and $S_1a'_1$.

A comparison between the figures Nos. 126 and 127 will plainly show that A' will always represent the platted position of the point A, derived from its two images a and (a_1) (revolved into horizontal plan). Still, it may not always be possible to identify both images of the same point on the two pictures, and, in order to apply Professor Hauck's method to identify the second image (on the second photograph) by means of the so-called "kernelpoints," the instrument shown in fig. 126 should be modified in such a way that the point of the second tracer may always be upon the image (on the second picture) which corresponds to the point designated by the first tracer on the first picture (revolved into the ground plane).

We had seen (Chapter I) that the line connecting the image of any point A on the first picture with the image of the second camera station (with the kernelpoint (s_1), fig. 127)—and the line — connecting the image of the same point A on the second picture with the image of the first camera station (with the kernelpoint (s), fig. 127)—will bisect the same point σ of the line of intersection of the two picture planes.

The picture planes being vertical, this line of intersection will be represented by the vertical line through the point Ω of the ground plane (through the point of intersection of the two picture traces or ground lines gg and g_1g_1). The picture planes having been revolved about their ground lines as axes into the horizontal plane, this line of intersection, $\sigma\Omega$, also revolved into the ground plane (once about gg and once about g_1g_1) will appear twice in the platting plane, once as $\Omega(\sigma)$, perpendicular to gg in Ω, and again as $\Omega(\sigma_1)$, perpendicular to g_1g_1 in Ω.

As the points (σ) and (σ_1) represent the same point σ revolved into the horizontal plane, once about gg and again about g_1g_1 as axes, the lengths $(\sigma)\Omega$ and $(\sigma_1)\Omega$ must be equal.

In order, therefore, that this instrument, fig. 126, may work in harmony with the principles that underlie Professor Hauck's method, it will have to be modified to fulfill the following conditions:

A line drawn through the kernelpoint s_1, fig. 127, and any point pictured on the first photograph and a line drawn through the kernelpoint s and the image of the same point on the second photograph are to intersect the line of intersection of both picture planes in the same point σ, or the two lines revolved (with the picture planes) into the horizontal plane must bisect the revolved lines $(\sigma)\Omega$ and $(\sigma_1)\Omega$ (of the line of intersection of the picture planes) in points (σ) and (σ_1), both to be equidistant from Ω.

The complete instrument, in a general way, is represented in fig. 127. The two slotted rulers gg and g_1g_1 of fig. 126 have been supplied with additional arms $\Omega(\sigma)$ and $\Omega(\sigma_1)$, each arm including an angle of 90° with its ruler. These rectangular elbow pieces are secured to the platting board by four thumb tacks T after the rulers $g\Omega$ and $g_1\Omega$ had been placed with their center lines upon the picture traces gg and g_1g_1, respectively, in such a way that the intersections of the center lines of the elbow rulers (at the rectangular elbow ends of the rulers) coincide with the intersection Ω of the ground lines or picture traces gg and g_1g_1.

The pantograph arms, representing the ground lines of the pictures, are attached to the rulers the same as shown in fig. 126. Studs are inserted into the kernelpoints (s_1) and (s), and the arms $\Omega(\sigma)$ and $\Omega(\sigma_1)$ support a ruler $(\sigma)(\sigma_1)$, which may glide freely over these arms of the elbow pieces. To cut off equal lengths by this ruler $(\sigma)(\sigma_1)$ on the elbow arms $\Omega(\sigma)$ and $\Omega(\sigma_1)$, the angle $d(\sigma)e$ is adjustable, and it should be regulated for each set of two picture traces to make:

$$(\sigma)\Omega = (\sigma_1)\Omega$$

When $(\sigma)d$ is moved along the slot of $(\sigma)\Omega$ the slide point (σ_1) will move along $(\sigma_1)\Omega$, $\Omega(\sigma)$ always being equal to $\Omega\ (\sigma_1)$.

The screw d serves to clamp the angle $d(\sigma)e$ for any opening corresponding to the angle

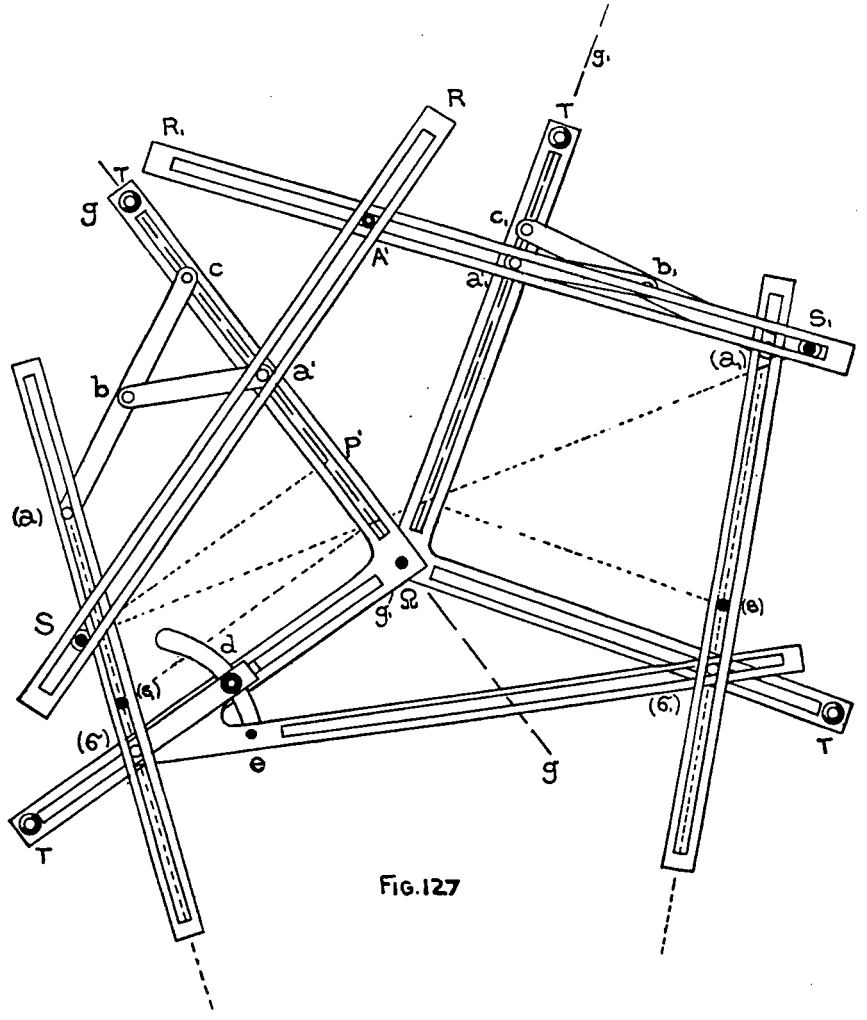

FIG. 127

$g\Omega g_1$ included between the picture traces. Slotted rulers are now placed over the studs that mark the kernelpoints (s_1) and (s), their slots also receiving the cylindrical prolongations of the tracers (a) and (a_1) and those of the slide points (σ) and (σ_1), respectively. To complete the instrument, two slotted rulers RS and R_1S_1 are finally placed over the studs S and S_1 (marking the platted positions of the two stations) and over the sliding joints a' and a' (which are the same as those in fig. 126). At their point of intersection A' the sliding pencil point is inserted (into the slots of these two rulers), which finally completes this instrument as illustrated in fig. 127.

If we now move the tracer (a) on the first photograph, the pantograph arms (a) c and ba' will change the position of the ruler SR (into the direction of the radial from S, to the horizontal projection, on the picture trace, of the pictured point designated by the tracer point (a) on the first photograph), and the ruler (a) (s_1) is moved, locating the point (σ).

This change in the position of (σ) produces a corresponding change in the sliding point (σ_1), which in turn changes the position of the tracer (a_1), causing the pantograph arms (a_1) c_1 and $b_1 a'_1$ to move, and a change in the position of a'_1 will cause the radial ruler $R_1 S_1$ to assume a new position also. The intersection of RS with the new position of $R_1 S_1$ will locate the platted position in horizontal plan of the point under the tracer (a) on the first photograph, without having actually identified the corresponding image of the (same) point under the tracer (a_1) on the second picture.

If a line on either photograph is followed out by one of the tracers (a) or (a_1), the pencil point A' will draw the horizontal projection of the line given in perspective (the second tracer being observed chiefly as a check or to aid the general working of the instrument by a gentle tapping when the movements of the various parts of the instrument are retarded by too much friction or lost motion).

Until now no perfect perspectograph has been constructed, and, no matter how accurately such instruments, like the one just described, may be made by the mechanician, there will always remain some unavoidable imperfections in the material or in the workmanship of the instrument that will produce more or less error in the results.

For accurate and precise work, therefore, the iconometric platting should be accomplished with the aid of graphic or geometrical constructions for all the control work of the survey, using perspective instruments only for filling in such details which, in an instrumental survey of a similar character, would be sketched in by the topographer.

Blank page retained for pagination