Serial No. 7

DEPARTMENT OF COMMERCE

U. S. COAST AND GEODETIC SURVEY

E. LESTER JONES, SUPERINTENDENT

GEODESY

LATITUDE OBSERVATIONS WITH PHOTOGRAPHIC ZENITH TUBE AT GAITHERSBURG, MD.

BY

FRANK E. ROSS, Ph. D.

IN COOPERATION WITH THE INTERNATIONAL GEODETIC ASSOCIATION

QB
275
.U35
no. 27
(1915)

SPECIAL PUBLICATION No. 27

LIBRARY
MAR 2 9 1991
N.O.A.A.
U.S. Dept. of Commerce

WASHINGTON
GOVERNMENT PRINTING OFFICE
1915

National Oceanic and Atmospheric Administration

ERRATA NOTICE

One or more conditions of the original document may affect the quality of the image, such as:

Discolored pages
Faded or light ink
Binding intrudes into the text

This has been a co-operative project between the NOAA Central Library and the Climate Database Modernization Program, National Climate Data Center (NCDC). To view the original document, please contact the NOAA Central Library in Silver Spring, MD at (301) 713-2607 x124 or www.reference@nodc.noaa.gov.

LASON
Imaging Contractor
12200 Kiln Court
Beltsville, MD 20704-1387
January 1, 2006

ADDITIONAL COPIES

OF THIS PUBLICATION MAY BE PROCURED FROM
THE SUPERINTENDENT OF DOCUMENTS
GOVERNMENT PRINTING OFFICE
WASHINGTON, D. C.
AT
25 CENTS PER COPY

▽

CONTENTS.

	Page.
Introduction	7
Some considerations leading to a choice of instrument	9
Description of instrument and adjustments	16
Specimen measurement and reduction sheet	25
The Elizabeth Thompson comparator	27
Reseau	30
Adjustments of the zenith tube	33
Scale value	38
Temperature coefficient (semi-theoretical)	40
Film distortion	42
Position of the second Gaussian point	46
Investigation of the accuracy of the carriage motion	46
Program and latitude observations, photographic	49
Star program	49
Results of observations, photographic	51
Group differences and closing sum	70
Constant of aberration	72
Solar parallax	72
Daily mean latitudes, definitive	73
Comparison of photographic variation of latitude curve with the normal curve	76
The Kimura term	78
Discussion of errors	81
Probable errors	81
Temperature conditions	82
Probable errors arranged according to zenith distance	85
Probable error of the daily mean latitude	85
Relative accuracy of observations before and after midnight	86
Systematic and accidental errors in plate measurement	87
Probable error of the photographic impression of stellar images	90
Probable error depending upon stellar magnitude	91
Refraction oscillations	93
The systematic error N–S	95
Common pairs	97
Results of observations with the visual instrument	104
Discussion of visual latitudes	119
Probable error with visual instrument	121
Night error and abnormal results	122
Daily variation of latitude	125
Personal equation with zenith telescope	126
Number of observations summarized	127
Summary of results	127

ILLUSTRATIONS.

View of reseau	31

[Together at end of volume.]

	Plate.
Section of zenith tube and building	A
Plan view of head of zenith tube	B
Sectional view of head of zenith tube	C
Section of magnetic clutch	D
Plate holder	E
Focusing rod	F
Zenith tube, upper part	G
Zenith tube, lower part	H
View of exposure control	I
Tube clock	J
Elizabeth Thompson comparator	K
Mercury basin and stand	L
Microscope and stand for testing motion of carriage	M
View of observatories	N
General view of grounds and buildings	O
Photographic and visual latitude variations compared with normal curves	P
Specimen photographic plate	Q

Blank page retained for pagination

LETTER OF TRANSMITTAL.

DEPARTMENT OF COMMERCE,
U. S. COAST AND GEODETIC SURVEY,
Washington, April 17, 1915.

SIR: There is transmitted herewith manuscript of a publication entitled "Latitude Observations with Photographic Zenith Tube, by Frank E. Ross, Ph. D., at Gaithersburg, Md., in Cooperation with the International Geodetic Association," and intended for publication as Special Publication No. 27.

The zenith tube was constructed according to plans prepared by Dr. Ross and was used by him at the latitude observatory maintained by the International Geodetic Association at Gaithersburg, Md., which observatory was under his charge. By the use of the zenith tube results of very remarkable precision and of great importance have been obtained.

By an agreement approved by the Treasury Department January 23, 1899 (under which department the Coast and Geodetic Survey then was), the Superintendent of the Coast and Geodetic Survey, being a member of the Permanent Commission of the International Geodetic Association, has exercised supervision over the work of two of the three observatories for the observation of the variation of latitude maintained by the Association in the United States, Gaithersburg being one.

The observatory at Gaithersburg was closed some months ago, and the final work of Dr. Ross has been the preparation of the report now transmitted.

E. LESTER JONES,
Superintendent.

To Hon. WILLIAM C. REDFIELD,
Secretary of Commerce.

LETTER OF SUBMITTAL.

To the Superintendent of the United States Coast and Geodetic Survey and Member of the Permanent Commission of the International Geodetic Association.

SIR: I herewith submit to you the following report of the operations conducted at the observatory of the International Geodetic Association at Gaithersburg, Md., from June, 1911, to October, 1914, with particular reference to the work of the Photographic Zenith Tube and its comparison with the work of the Wanschaff Zenith Telescope.

Very respectfully,

FRANK E. ROSS,
Observer in Charge.

APRIL 15, 1915.

Blank page retained for pagination

LATITUDE OBSERVATIONS WITH PHOTOGRAPHIC ZENITH TUBE AT GAITHERSBURG, MD.

By FRANK E. ROSS, in cooperation with the International Geodetic Association.

INTRODUCTION.

At the conference of the International Geodetic Association at Cambridge, England, in September, 1909, plans were submitted by Mr. O. H. Tittmann, Superintendent of the United States Coast and Geodetic Survey, for the construction and operation of a photographic reflex zenith tube to be used in determining the latitude variation. It was proposed that this instrument be installed at Gaithersburg, Md., one of the six latitude observatories of the Association, and operated in conjunction with the Wanschaff zenith telescope without interfering with the program of work mapped out for the latter. It was proposed that the results secured be compared with those obtained by the Wanschaff instrument, and its curve of latitude variation further compared with the normal curve resulting from the combined work of all six stations. It was hoped that the data secured would shed light upon the Kimura term in the latitude variation, which is of obscure origin and has remained an unsolved problem; that a value of the constant of aberration be obtained, a by-product of the work, which should be entitled to the greatest weight, possibly shedding light on the remarkable discordances now existing in its various determinations. It was further hoped that the accuracy of the individual observations and freedom from all classes of systematic error would be such that short-period or diurnal terms in the latitude variation might be detected, if any such exist, apart from those minute terms given by theory, which are well known.

The Conference thereupon voted a subvention of 10,000 marks for the construction of the instrument and a further subvention of 2,000 marks annually for assistance in measuring the photographs and making the reductions.

The following year Mr. Tittmann secured a grant from the trustees of the Elizabeth Thompson Science Fund for the construction of a comparator, or instrument of a design suitable for measuring the photographs. Yearly reports of the kind and amount of work accomplished with the comparator thus secured have been submitted to the chairman, the late Dr. C. S. Minot.

The contract for the construction of the photographic zenith tube and the comparator was awarded to William Gaertner & Co., of Chicago, Ill. The completed instruments were received at Gaithersburg in May, 1911. The zenith tube was immediately installed in the building which had been prepared for it, and observations commenced early in June. Except for a break of seven weeks in August and September, 1911, during an absence of the writer, observations have been secured with it uninterruptedly from June 9, 1911, to October 23, 1914. Altogether 6,944 stars have been photographed on a total of 450 nights, or an average of 15 per night.

For measuring the plates it was necessary to install the comparator in a stone or brick building, in which diurnal temperature changes are small. The wooden buildings at Gaithersburg are entirely unsuitable on account of their steep temperature gradient in the daytime, or during the hours when the plates are measured. The main office building of the United States Coast and Geodetic Survey in Washington was found ideal for the purpose. A room with a northern window was here set aside for the purpose and every facility placed at our disposal for the convenient and successful prosecution of the work.

Practically the entire work of measuring the photographic plates and making the subsequent reductions was performed by Miss Edith Jarboe, whose faithfulness and skill in performing this arduous labor are deserving of special mention. The total number of stellar images measured by her was approximately 42,000, each being measured in two positions of the plate.

Thanks are due to Dr. Frank Schlesinger, Director of the Allegheny Observatory, for his encouragement and valued criticism and advice; to Dr. P. G. Nutting and E. D. Tillyer, both of the United States Bureau of Standards, for valued conferences on the optical and photographic problems involved in constructing and operating the instrument. To Mr. Tillyer is due the credit for the plan adopted of connecting through the intermediary of a magnetic clutch, the fixed driving clock with the gearing of the movable reversible plate carriage track. The details of this clutch were designed by Mr. Tillyer. To the maker, William Gaertner, is due the design of the ways, plate carriage, propulsive connections, and the driving clock and governor. Mr. Gaertner's zeal and disinterested singleness of purpose in the entire work of planning and constructing the instrument is gratefully acknowledged.

The objective and its cell were made by O. L. Petitdidier, of Chicago, according to curves computed by Dr. A. C. Lunn, of the University of Chicago. The specifications were unusually exacting. They required that the glass chosen be of the greatest possible transparency, since its diameter had been reduced to a minimum; that its clear aperture should be 20 centimeters and focal length 516 centimeters; that its principal or second Gaussian point should lie accurately 1 centimeter below the lower surface of the objective in the prospective plane of the photographic plate. This last requirement is of especial importance, as upon its fulfillment hinges the possibility of making the observations absolutely independent of the spirit level. The performance of the objective is such as to reflect great credit upon Mr. Petitdidier. Notwithstanding its unusual aperture ratio of 26, the images are small, round, and sharp and have been much admired. (See Plate Q.)

Special acknowledgment should be made to E. G. Fischer, chief of the instrument division of the United States Coast and Geodetic Survey, for valuable assistance and criticism. The numerous changes in the instrument which were found necessary and desirable, changes extending over a period of nearly two years, were made in the shops of the United States Coast Survey under Mr. Fischer's supervision. The new mercury basin and its mounting, adopted after much experimentation, were thus made, as well as the new plate holders adopted in February, 1913. These plate holders were designed in their entirety by Mr. Fischer.

That a great many changes in the instrument after its installation were found necessary is in no sense a reflection upon the work of Mr. Gaertner. An instrument of this kind, being the first of its type, is peculiarly open to the destructive and constructive criticism of actual operation and results, to all of which it must adjust itself by degrees.

The computing division of the United States Coast Survey, under William Bowie's supervision, has assisted in the reduction of the visual observations. A comparison of the visual with the photographic results is an essential part of the program.

The following observers have taken part in the work: W. N. Ross, from August 11 to September 29, 1911, during the writer's absence—no photographic results were secured by him in this period, due to certain defects which could not be remedied in time; C. W. Frederick, from July 19 to September 20, 1912, also during the absence of the writer; C. R. Duvall, from January 1, 1913, to May 2, 1913; C. A. Mourhess, from January 1, 1914, to the close of the observations in December, 1914.

SOME CONSIDERATIONS LEADING TO A CHOICE OF INSTRUMENT.

The observational data necessary for a precise study of the phenomenon of the variation of latitude has up to the present time, with few exceptions, been obtainable only with the zenith telescope, using the Horrebow-Talcott method of observation. It is true that instruments of other types have shown that the latitude is variable, and fairly accurate variation curves have been plotted from the material which they furnished. Such instruments are: Meridian circles; almucanters, visual and photographic; prime vertical transit instruments; and the Airy reflex zenith tube. It is an interesting fact that the last mentioned instrument had been accumulating observations continuously for a period of more than 30 years before the discovery of the latitude variation, which remained a mine of hidden wealth until opened up by Dr. S. C. Chandler. Through a rediscussion of the observations with this instrument from his advanced viewpoint he was enabled to trace the variation curve backward during the whole of this extensive period and clinch his proof of the reality of the phenomenon. Incidentally, he removed the stigma of inefficiency from an instrument which had been tried, patiently and tenaciously, and apparently found wanting.

While these various types of instruments enumerated above give valuable confirmation of the reality of the phenomenon of latitude variation, it is true that their usefulness generally has ended here, and that for quantitative results they have not been able to seriously compete with the Horrebow-Talcott method of observation, or hold up to its high standard. While granting the truth of this as a matter of experience, an academic discussion of the relative merits of zenith telescope and an instrument of the Airy type alluded to above in nowise bears out this superiority. There seems to be no reason in theory why an Airy zenith tube should not give results superior to those given by a zenith telescope, producing a curve of latitude variation freer from both accidental and systematic errors of all kinds. In speaking of the Airy instrument Chandler[1] says: "* * * The theory of the instrument is perfect, its construction is of the last simplicity, and the quantity measured is obtained with a directness and thorough elimination of instrumental error as high as it is easy to conceive."

In view of the importance of the subject, it will not be out of place here to enumerate and briefly discuss the principal faults of the Horrebow-Talcott instrument and method of observation. They are:

1. The obvious faults of the levels which are fundamental to the instrument. They have been trusted only where they give results in accord with our preconceptions in any particular case.

2. *Personal equation.*—So far as known to the writer, the largest relative personal equation yet found is that existing between Edwin Smith and Dr. H. S. Davis, observers at the Gaithersburg latitude observatory of the International Geodetic Association. The value found was 0.10 second, which is an important fraction of the total variation. (See Resultate des Internationalen Breitendienstes, Band I.)

It is not unreasonable to suppose that the personal equation of an observer varies from time to time. Study of the yearly mean values of ϕ of the observatories of the International Geodetic Association shows this to be a possibility (Resultate, Band III.). Again, the personal equation may vary from summer to winter, in a similar manner for each observer. Such variation would give rise to a "Kimura term," a minute inequality of yearly period which has been prominent in the latitude variation. The physical and nervous condition of an observer is quite different at the high and low temperatures corresponding to the summer and winter seasons, which might very well lead to a change in the personal equation, itself an obscure,

[1] Astronomical Journal, No. 511, p. 57.

nonunderstandable phenomenon, although undoubtedly a real one. Expressed mathematically, to suppose that there are no variables in the personal equation function is highly improbable.

3. *Instrumental equation.*—The instrumental errors of the zenith telescope which persist and so can be classed as an instrumental equation appear to depend upon the following, so far as studied: The zenith distance of the latitude pair; the interval of time between the two stars of the pair; the side of the pier from which the first star of the pair is observed, giving rise to the east-west discordance; the declination of the first star of the pair. Manifestly the problem of disentangling these various classes of error is an extremely difficult one, study of which has only just begun. A valuable start in this direction has been made by K. Hirayama,[1] who concludes: "The present note may be closed by announcing the existence of a large error in the results of the observations made with zenith telescopes, which may be explained as the effect of a gradual change of flexure."

Some experiments made by the writer at Gaithersburg appear to throw light upon the errors classified under (3), allowing them to be partly explained as temperature effects, due to strong nocturnal radiation and dew deposition. Two thermometers were strapped to the tube of the zenith telescope on opposite sides, in a vertical plane, and read under various conditions of telescope setting, size of roof opening, and of clear and cloudy sky. It was found that the upper or more exposed part of the telescope tube was the colder, the difference increasing with the zenith distance, the size of roof opening, and diminishing with increasing cloudiness. It is clear from this that whenever a change in the setting of the instrument is made a new temperature gradient is created, affecting observations through change in the form of the tube, change in the wave front within the tube, and change in the form of the objective, producing a displacement of its optical center, the fixedness of which is vital.

Such considerations as these and perhaps others have led astronomers to adopt forms of instruments for the study of the latitude variation other than the zenith telescope. The various forms or types have been enumerated above. It is not the intention here to study their relative advantages and disadvantages. No one can fail being impressed with the simplicity and theoretical perfection of the Airy reflex zenith tube, which has been so elegantly and tersely pointed out by Chandler, quoted above. The writer early gave it consideration as an instrument which might replace the zenith telescope, or at least become its valuable ally. Even if the results secured with it should be no more trustworthy, there can be no question but that a comparison of observations secured with it with those secured with a zenith telescope, especially if the two instruments are operated at one and the same observatory, should give valuable data on a variety of obscure phenomena, the chief of which is the Kimura term. If this term is of personal origin, or even due to a seasonal instrumental error, which are explanations as plausible as any which have been advanced, such a simultaneous series of observations should disclose the fact. The reality of the night error could be investigated, as well as possible short period terms in the latitude variation. Light also would be shed on the origin of the long period irregularities which are sometimes found in the variation, of which those occurring at Cincinnati and Gaithersburg in 1904 are extreme examples. These are questions of prime importance, making urgent the prosecution of simultaneous series of observations with two instruments of radically different types.

The imperfections of the Airy reflex zenith tube, located at Greenwich, have been clearly pointed out by A. S. Eddington.[2] He shows that its comparative inefficiency has been due to the following faults: The second passage of the light through the objective; lack of control of the focal length; smallness of the objective. These faults were considered to be so serious that work with the instrument was discontinued in 1910 after an active service of more than 50 years, in which there was but one interruption.

An improved zenith tube, known as the "Wharton reflex zenith tube," was designed and constructed by Prof. C. L. Doolittle, of the Flower Observatory of the University of Pennsylvania, in 1904. Prof. Doolittle had already eliminated the objectionable features of the

[1] Astronomische Nachrichten, Nos. 4207, 4332.

[2] Monthly Notices, R. A. S., Vol. 71, p. 541.

Greenwich instrument before the appearance of Eddington's paper on the subject, which was pulished in 1911.

The Wharton instrument proved to be a vast improvement over the Greenwich instrument. The final discussion of the long series of observations which has already been secured with it has only recently appeared.[1]

It appeared to the writer that an instrument of this type was preeminently fitted for the application of the photographic method; that the substitution of the impersonal photographic plate for the human eye would eliminate the last and only known source of error existing in this type of instrument. With a focal length sufficiently great, systematic errors in measuring the photographic images can be made negligible, or even entirely eliminated by suitable methods of measurement. It is well known that the personal equation in visual observations has amounted to 30 per cent of the maximum variation of latitude. With a photographic zenith tube of a focal length not too great for successful manipulation, this error should not exceed 1 per cent. There are weighty reasons why the focal length of visual instruments is limited to 4 or 5 feet. There seems to be no reason why a reflex zenith tube should not have a focal length of 30 feet or more.

So far as the writer is aware, only two previous attempts have been made to observe latitudes photographically. Short series of observations have been made with a zenith telescope photographically adapted, designed by Dr. Marcuse. A photographic floating zenith telescope was designed by Cookson and operated at Cambridge, England, for a period of years, 1905–7. This instrument was taken over by the Greenwich Observatory in 1911, where it is being successfully employed for the determination of the variation of latitude and the aberration constant.

The series of drawings and photographs (Plates A to M) which are to be found at the end of the report should give the reader a clear and comprehensive idea of all essential features of the instrument and the manner in which it is mounted. They show the instrument and building in their final condition, as they were left in February, 1913, after a succession of changes which began with the installation of the instrument in June, 1911. Since this later date no changes whatever were made. The results secured in the period of 21 months from February, 1913, to October, 1914, or to the close of the work, are accordingly to be considered as representative of the character of the work to be obtained from this instrument and installation, as left in the condition shown in the drawings.

Some further improvements had been planned but were found impractical of execution (p. 17). On account of the limited time available, it was deemed best to run the series of observations through with the instrument in the final form of February, 1913. Should an oppportunity be presented of remounting the instrument in a situation not subject to the handicaps which necessarily surround its installation at Gaithersburg (see p. 16), a comparison of the results obtained with those obtained here will prove both interesting and instructive.

Points of prime importance in designing the instrument were, determination of size of the objective, length of focus, and position of the focal plane. As a preliminary to settling upon the least aperture which it would be possible to profitably use, a count of the available stars in the A. G. Lund Catalogue was made. The only stars considered were those which culminate within 10 minutes of the zenith at Gaithersburg, this distance being fixed provisionally as the maximum distance to be measured. It was found that in order to determine with sufficient weight the latitude variation and the constant of aberration, stars of 8.5 magnitude would have to be included in the observing program.

Before settling upon the size of the objective necessary to secure a photographic register of stars of this degree of faintness, it must be decided: (1) Whether the measures are to be made on star trails, with a fixed plate; or (2) should a moving plate be employed, allowing point images to be secured.

Decision of the question raised in (1) and (2) was long delayed, as the opinions of a great many astronomers and instrument makers were solicited, and when obtained, duly weighed.

[1] Publications of the University of Pennsylvania, Vol. 3, No. 2.

The advantages of a fixed plate are, as gathered from the discussion: (*a*) Total elimination of error of plate movement, an error which, if of any magnitude, would be fatal to accurate results; (*b*) greater ease of operation, to the point where the instrument can be made to operate automatically for several hours at least, or possibly for an entire evening without any attention whatever from the observer; (*c*) simplicity of construction.

The advantages of moving plate are: (*a'*) Greater accuracy of measurement of stellar images as compared with measurement of trails; (*b'*) for a given size of objective and focal length, a much larger number of stars available, allowing the formation of a better balanced program.

In the opinion of some (*a*) was decisive. It was believed that the unavoidable presence of dust and gummed oil on the tracks upon which the photographic plate carriage must move would introduce serious error in the observations. With carriage and track kept in perfect condition, such as can be secured in a laboratory, American instrument makers did not hesitate to affirm that the motion of the carriage forward and backward would be true to a fraction of the wave length of light, or to the order of 0.1μ. There only remained the question of its behavior when subject to actual observing conditions in an observatory building where dust can enter the instrument, and where frequent cleanings might prove irksome and be neglected.

The reasons which lead to the adoption of the moving plate are, briefly:

A. It was believed that the advantage (*a*) would prove to be of comparatively little importance, and that with reasonable care of the track and carriage the errors of movement could be kept to a maximum of 1μ or 0.001 millimeter. Whether this faith has been justified is considered in detail elsewhere (p. 46).

B. If a fixed plate should be employed, the star program would be seriously curtailed in extent, unless the objective be increased unduly in size. Such an increase would make its cost prohibitive. As pointed out above, it is absolutely necessary to have a working program consist of a large number of stars. The usual condition which it is necessary to impose upon each star group of the adopted program, namely, that the mean zenith distance of the group be zero within very small limits, causes a great many stars to be rejected which might otherwise be used. It is true that the desired end might be obtained by reducing the focal length to such an extent that measurable trails of stars of the necessary faintness can be secured. But the reduction of the focal length would have to be so great that errors of measurement of the trails and errors due to the appreciable size of the silver grains of the photographic plate, when converted into angular measure, would be so large as to seriously impair the value of the work. With a short focal length, an error of one micron is of importance. With the unlimited focal length made available when a moving plate is decided upon, an error of this size, when converted into arc, can be made vanishing.

C. An important advantage has accrued to the moving plate which was not recognized or known until some months after the instrument had been in operation. It had been supposed that the trail of a star, aside from its geometrical curvature, was a straight line, upon which were superimposed the minute vibrations due to poor seeing. But observations with the instrument soon disclosed the fact that this was not true; that oscillations of large and irregular amplitude, with periods much longer than the ordinary vibrations due to poor seeing, were very frequent, especially upon those nights when atmospheric conditions were unfavorable. In discussing this phenomenon with Prof. F. B. Littell, of the United States Naval Observatory, the attention of the writer was called by him to the work of Nusl and Fric,[1] who had by means of an ingeniously designed telescope measured similar oscillations in the altitude of Polaris. The existence of these oscillations has since been confirmed by Dr. Frank Schlesinger,[2] from photographic plates taken at the Yerkes Observatory and at Mount Wilson with equatorial telescopes, a refractor and reflector respectively. It is stated by J. A. Hammond, of the United States Naval Observatory, that these oscillations are frequently observed by him with the 6-inch transit instrument of the Naval Observatory. At large zenith distances he finds these oscillations very marked at times, reaching an amplitude of several seconds of arc. Their

[1] "Première Étude sur les Anomalies de Réfraction," Bulletin International de l'Académie des Sciences de Bohême, 1908.

[2] "Irregularities in Atmospheric Refraction," Publications of the Allegheny Observatory, Vol. 3, No. 1.

period is irregular, sometimes reaching a minute or more, so that taken in conjunction with their irregular amplitude, they are to be considered as more of the nature of fluctuations than true periodic variations.

The existence of these fluctuations being admitted, it is readily seen that a moving photographic plate, securing point images, has a considerable advantage over the fixed plate and the star trail. The moving plate can be said to *integrate* the zenith distance of the star over a period of time (87 seconds in the case of this instrument), whereas a trail can be measured at only a few points of its irregular course. The accuracy which can be secured by using a moving plate should therefore be greater. That this is really true is shown on page 93.

Having decided upon the type of instrument (the moving-plate type) it becomes necessary to fix upon the length of exposure of each image. A study of the geometrical curvature of the star trail, and its inclination at different points of its course to its direction at meridian passage, led to the conclusion that it would be unwise to prolong the exposure of each image beyond 15 seconds. This is due to the fact that the motion of the plate must be rectilinear, whereas the image of the star moves in a curved path. During an exposure of 14.5 seconds, which is the exposure time actually adopted, the curvature of the trail as measured by its versed sin amounts to 0.0003 millimeter. The tendency of this is to make the image unsymmetrical, by an amount increasing as the square of the exposure time. The effect would be equivalent to the optical defect of coma, only here the coma effect would be constant over the field.

In addition to the curvature of the trail there is an elongation of the image in a direction parallel to the meridian, which increases with the distance of the star from the meridian, or with the hour angle. In the case of this instrument, where three images are secured of each star both before and after meridian passage, the most distant images are taken from the hour angle $t=40^s$ to $t=55^s$. The elongation of these images amounts to 0.009 millimeter, as a simple calculation shows. The diameters of the images vary from 0.02 millimeter to 0.12 millimeter (p. 51). Comparing these with the elongation, we conclude that the ellipticity of the images should be noticeable. This geometrical ellipticity is however complicated by possible inaccuracies in the speed of the plate, which would elongate the images transversely. No adverse effect upon the observations from these circumstances can be imagined.

It next becomes necessary to fix upon the size of the objective. This must be large enough to produce good measurable images of stars as faint as 8.5 magnitude, with an exposure time of not more than 15 seconds.

At the writer's request Prof. H. C. Wilson, Director of the Northfield Observatory, kindly undertook to expose a series of plates of different makes upon the Pleiades group, with different exposure times, varying from 10 to 60 seconds. The instrument was an excellent photographic equatorial of 8 inches aperture. The results showed that with the modern fast dry plates an objective of 8 inches diameter is sufficiently powerful to give good images of ninth magnitude stars, with short exposures of 20 or even 10 seconds. But allowance should be made for poor seeing, since observations must be secured upon a great many nights when atmospheric conditions are unfavorable and the sky thick, in order to secure a sufficient number of observations. Furthermore, it was planned to adopt a focal length about twice that of the Northfield instrument, which would still further reduce the density of the images. On the whole it seemed best to construct an instrument with an object glass of 10 inches aperture. But the expense was so great that it was finally decided to reduce this to 8 inches. It is to be regretted that the larger size was not secured, as its greater power would have added materially to the effectiveness of the instrument, not only for the determination of the latitude variation and its related constants but for the accurate determination of the declinations of a large number of faint stars in a narrow zone extending around the sky, work for which this instrument is admirably fitted.

The focal length is now to be considered. One of the great advantages of this form of instrument, the reflex zenith tube, is that the obvious virtues of a great focal length, such as increased scale and reduction of pointing errors, are in nowise neutralized by cumbersomeness or errors due to strains and irregular temperature effects, which are present in long telescope tubes. This is due to the fact that no matter what the focal length the focal plane is always in

close juxtaposition to the objective. Errors of measurement, distortion of film, and imperfections in the motion of the moving plate, when reduced to angular measure, decrease in direct proportion to the increase of focal length. An upper limit however exists beyond which it is not advisable for it to increase, for if the focal length is made tôo great the photographic plate would have to be so large (in order not to reduce the angular field) that a great deal of the light would be cut off. Another consideration is the loss of density of the image, causing loss of the faint stars, due principally to irregularities of refraction, the effect of which increases with the focal length. Again, the size of the unavoidable refraction errors and other unknown errors plays an important part. For example, if the probable error of these latter errors is ± 0.05 second for a single star, it would be useless to increase the focal length beyond a point where the pointing and plate errors become less than 0.03 or 0.02 second.

After mature consideration it was decided to adopt such a focal length that 1 millimeter on the plate corresponds to 40 seconds in zenith distance. This leads to a focal length of 203 inches, or 516 centimeters. By way of comparison it may be stated that such an instrument is equivalent in scale, so far as the measurement of zenith distances is concerned, to a meridian instrument with circle 68 feet in diameter.

Position of the focal plane.—In the Airy instrument the focal plane is above the objective, the light therefore passing twice through the glass. In the Wharton instrument the focal plane is likewise above the objective, but the objectionable second passage of the light through the glass is avoided by boring a hole through its center 1 inch in diameter. For visual observations it is probably more convenient to have the focal plane in this position. But for a photographic instrument an equally convenient position is directly *below* the objective, thus obviating the necessity of piercing the objective, as in the Wharton instrument. The lower position has been accordingly chosen.

Elimination of levels.—One of the principal virtues of the reflex zenith tube is elimination of the troublesome levels, the zenith being determined through the intermediary of a mercury surface. The theory of the instrument shows this elimination is complete if the principal or second Gaussian point of the objective lies in the focal plane (p. 33). The Gaussian point can be made to lie *outside* the objective any desired amount by increasing the separation of the crown and flint disks. In the usual form of objective, with the crown disk on the outside, the Gaussian point will lie above the telescope. But for our purpose it must lie within the tube if the photographic plate is to be placed under the objective as proposed. This can only be secured by reversing the ordinary arrangement of the crown and flint disks, placing the flint outside, which can be done without disturbing the optical properties of the objective.

Elementary theory of the instrument.—The essential parts of a reflex zenith tube are: An objective, which can be rotated in its own plane around a vertical axis; a micrometer or photographic plate rigidly connected with the cell of the objective; a mercury surface placed below the objective at a distance equal to one-half its focal length. Imagine the light from a star which culminates close to the zenith to pass through the objective. Let the mercury surface be so adjusted that the star's image falls on the photographic plate. If now the objective with the attached plate be quickly rotated through 360°, the image will trace out a circle, the radius of which is the star's zenith distance. In practice, the zenith distance of a star at its meridian passage is desired. In that case the objective remains stationary until the star reaches the meridian, then it is quickly rotated through 180°, and the star again allowed to trail. The distance between the two trails, corrected for curvature of path, will be twice the zenith distance of the star. If the objective could be reversed instantly and at the exact moment of meridian passage, the distance between the end of the first trail and the beginning of the second would be the correct double zenith distance, even if the rotation of the objective were only approximately 180°. In practice this can not be secured, so there must be a graduated circle or a pair of microscopes by means of which the exact reversal angle can be measured and the distance thereby corrected. The amount of this correction is proportional to the product of the distance from the meridian of the points measured by the

amount by which the reversal angle differs from 180°. If these points on the trails are selected not too far from the meridian, the reversal angle need not be known with great accuracy (p. 35).

From the fixed plate and star trails of the above elementary description to the moving plate and star images of the actual instrument is an easy step. The moving plate *moves* only in an east-west direction, and so can be considered as *fixed* in a north-south direction, which is the direction in which the measures are desired. Also, instead of the star trails we actually have two lines of point images into which the trails are condensed.

This short description of the essential features of the instrument will suffice the reader for an understanding of the details of its construction and operation which follow.

DESCRIPTION OF INSTRUMENT AND ADJUSTMENTS.

A general view of the grounds and buildings is shown in the photograph (Plate O). The elevation above sea level is 550 feet. The character of the adjacent country is gently rolling, covered with woods and meadows, with no prominent elevations within view.

The two observatories are as close together as practicable. The office building is directly east of the photographic observatory, at a distance of 22 feet. The dwelling shown at the left in the photograph is southwest of the observatory housing the zenith telescope, at a distance of about 50 feet. The prevailing winds at Gaithersburg during clear weather being north, west, and south, the heat from office and residence can rarely pass over the instruments. The relative locations were planned with this factor in mind.

The building (Plates A and N).—The interior of the observatory housing the zenith tube is 12 feet square, the instrument being in its exact center. It is directly east of the visual zenith telescope, the centers being 18 feet 5 inches apart, measured horizontally. An inclosed hallway 7½ feet long and 3 feet wide connects the two buildings. In other respects they are entirely separated.

In planning the details of the building to house the zenith tube it had to be kept in mind that one observer must operate both visual and photographic instruments simultaneously; and, moreover, the regular work mapped out at Potsdam for the visual instrument was not to be interfered with. Accordingly the observer must be able to pass from one instrument to the other in the space of a very few seconds. To secure this, the photographic instrument had to be placed partly below ground. The observing floor is 8 inches above the observing floor of the visual instrument, so that quick access from one instrument to the other is secured.

Ventilation of the walls of the building is secured by placing the rustic strips one-half inch apart after being beveled (Plate A). As a further aid to ventilation the inner walls have openings at top and bottom. There are also eight large openings at the base of the building on all four sides, a good view of some of them being shown in Plate N. These secure thorough ventilation at the base of the instrument.

Temperature conditions.—In designing the installation of the zenith tube it was realized that with the instrument partly above and partly below the ground, temperature conditions would not be the best. But it was argued that since work with the instrument would be confined to the immediate vicinity of the zenith, any horizontal air stratification in the observatory or in the instrument itself would not be harmful, as a simple calculation shows.

The original roof opening was formed by the two rolling sections AA (Plate A), giving a clear opening of 5 feet square. But temperature readings taken north and south of the instrument above the objective proved that the air strata above the objective and within the observatory were often tilted. To remedy this, in April, 1912, the entire fixed roof of the building BB (Plate A) was cut from the walls and set on rollers, as shown. In this way the free roof opening was increased from 25 to 120 square feet. The effect was very pronounced. The temperature of the air in the room above the observing floor was now found to be at all times identical with that of the outside air; in fact, the temperature conditions in this respect were now better than for the visual instrument, where a small difference between internal and external temperatures is always found.

Temperature of the tube.—Two thermometers are kept within the tube itself, near its upper and lower ends, which are read several times each night. The upper one rests on a narrow ledge between the two upper sections of the tube, while the lower thermometer is suspended in the tube at the level of the mercury basin. These thermometers seldom give identical readings. The lower one appears to be influenced considerably by ground temperatures, so

that its readings are generally higher than the upper one. The greater part of this inequality in temperature between the upper and lower portions of the tube is due to the instrument being partly underground, which was essential, as explained above.

At first this inequality of temperature within the tube was not considered to be of importance. In the case of colder strata of air in the lower part of the tube they were imagined to lie horizontally, so that no displacement of the nearly horizontal wave front was considered possible. With the temperature of the lower strata higher than that of the upper strata, which is the condition usually existing, a circulation of the air within the tube must take place, the effect of which would be to produce boiling or bad seeing. No permanence of stratification can be imagined to exist under these conditions which would produce a systematic deviation of the wave front.

Although this change in the roof just described gave improved air temperatures, the results of the latitude observations secured in 1912 were still not considered satisfactory. On February 6, 1913, further changes were made in the building. The wooden observing floor surrounding the instrument was taken up and in its place substituted rectangles of iron grating made of three-eighths-inch wire with 2-inch mesh, the whole forming a square of 8 feet, with the instrument in the center. (Plates A and G.) The grating was found sufficiently stiff to walk on comfortably. At the same time these changes were made the space above the pier between tube and sand box (see below) was filled with sawdust and crumpled paper. For a discussion of the effect of these changes see pages 82 et seq.

Originally the mercury basin rested on a sand box about 12 inches high, which in turn rested on the pier. It was imagined that the sand box would keep earth tremors from reaching the mercury surface, but it was also recognized to be a dangerous reservoir of heat or cold too close to the mercury basin and air above to be safe. Accordingly on April 18, 1913, it was removed and in its place was substituted the iron stool shown in Plates A and L.

As factors in determining the temperature of the upper part of the tube, nocturnal radiation and dew deposition are to be considered important. Their action is very strong with the large roof opening used since April, 1912, the upper part of the instrument being practically in the open air. The effect of radiation and dew deposition is so great that if unchecked the temperature of this part of the instrument would fall below that of the free air, as has actually been observed, thus accentuating the difference in temperature of upper and lower portions of the tube. In order to prevent this chilling, the exposed portion of the tube from the grating up is covered with several layers of paper. When the upper part of the tube has reached the temperature of the air during the evening's work (at the start its temperature is always above that of the air), it is covered with a muslin cloth to check its too rapid fall. As a further preventive against chilling a large square of heavy cardboard is always kept over the top of the tube, which is only removed when the stars are actually being photographed.

While the temperature of the air surrounding the lower portion of the tube is not very different from that surrounding the upper portion, the effect of radiation and dew deposition upon it is less strong, so that its fall in temperature during the night is less rapid. A careful study has been made of the effect of the inequality of tube temperatures, or temperature gradient, upon the latitude observations (p. 83).

It would have been a simple matter to equalize the temperature of the air in the tube by using an electric fan for drawing the air out of the tube. The fan could operate during the long intervals between stars, it being shut off only during the actual exposures. The principal reason this was not tried out was the lack of current. Moreover, it was not deemed best to make changes in the instrument too rapidly; otherwise the effect of each change could not be accurately ascertained. If a longer series of observations had been possible, an electric blower would have been installed. Whether it would have improved the quality of the observations is of course problematical.

Another improvement which was contemplated consisted in placing the instrument entirely above ground. Instead of resting on the pier, the base should set on three rigid castings from

1 to 2 feet high. The lower end of the instrument should be closed by an iron plate, through which the three legs of the stand supporting the mercury basin could pass. Thus the tube itself would be practically insulated from ground temperatures and, moreover, a free circulation of air insured on all sides, top, and bottom.

Foundations (Plate A).—The piers for supporting the instrument are two in number—an outer massive pier upon which the tube rests and an inner smaller one for supporting the mercury basin. This division of the foundations of the instrument into two piers insures greater freedom from disturbance of the mercury surface, whose quiescence is of the greatest importance. The main encircling pier which supports the tube is 6 feet high and 6 feet square at its base, tapering to 4 feet at the top. Its center is hollow. The lower half of this hollow space is filled with sand which serves as a foundation for the concrete block supporting the mercury basin. Crumpled sacking fills the crack between the two piers at their upper surface. The character of the ground at the bottom of the pit is clay and disintegrated stone.

A layer of sawdust 4 inches thick covers both foundations within the tube. Upon this is a layer of crumpled paper 2 inches thick, the whole covered by a heavy black cloth. The sawdust and paper assist in insulating the tube and mercury basin from ground temperatures.

Telescope tube (Plate A).—The pillar or telescope tube is of cast iron, varying from one-half inch in thickness at its upper end to three-quarters inch near its lower. It is in four sections, firmly bolted together. The total height of the tube is 10 feet 5 inches. The interior diameter at the top is 12 inches, which increases gradually to 19½ inches at the level of the mercury surface. The lower or supporting section flares abruptly below the mercury surface, its thickness increasing proportionately. The diameter of the base is 39 inches; its width 4 inches. The weight of the lower section alone is about 700 pounds.

Three 1-inch bolts are embedded in the foundation. They pass through holes in the rim of the lower section of the tube, which is thus securely tied to the foundation. The concrete pier at these three points is slightly elevated above the surrounding surface, giving a three-point support to the instrument. In installing, the base was set upon the soft cement, thus insuring good contact at all three supporting surfaces.

There are four openings in the tube, opposite each other in pairs, which are provided with doors. The upper openings (Plate G) are only large enough to enable the observer to insert the photographic plates and make needed adjustments. The lower openings enable the observer to clean and adjust the mercury surface. All four doors are covered with felt on their inside, making the tube practically air-tight. During observing they are kept closed. At the close of each night's work they are thrown open, for the purpose of ventilating the instrument.

The elevation of the mercury surface is adjusted only once each evening, or just before beginning observations. Its surface is cleaned before observing each star group, or at intervals of from two to three hours.

The rotary (Plates B and C).—Within the upper or fourth section of the tube is fitted the conical casting containing the essential parts of the instrument, objective and plate-carriage track. Since this single casting with objective, etc., attached forms practically the entire instrument, the tube being merely an extension of the pier, a distinctive name should be chosen, especially since frequent reference will be made to it. The writer has chosen the term *rotary* from among a number of equally suitable designations.

The rotary rests upon two conical bearings in the upper casting, 1 inch wide and 3 inches apart. Its upper end terminates in a broad horizontal flange, against which the six adjustable friction rollers B′ bear, relieving the pressure between the bearing surfaces. Care must be taken not to remove too much of the weight, as the stability of the reversal angle would be seriously affected. With the rollers B′ properly adjusted, a reversing couple of about 5 pounds is necessary, applied at a pair of opposite handles H, of which four are provided for the purpose. This moderately great force thus made necessary has an advantage in preventing too quick reversal of the rotary, which would be more or less dangerous. Reversal is easily made in about six seconds.

It was found that only the finest oil (e. g. Nye's watch oil) could be used for the bearing surfaces between rotary and casting. The surfaces must be cleaned and oiled once in about six weeks, or oftener in cold weather, when reversal becomes more difficult. For cleaning and oiling, the rotary is lifted out of the tube by the handles H and set on a specially constructed wooden stand.

The friction rollers E (Plate C) are one-half inch in diameter. They are fixed on top of short polished cylindrical steel rods G, which are accurately fitted to the cylindrical holes containing the coiled springs H′. Two short pins set in each rod slide in corresponding longitudinal grooves in the holes, thus keeping the rollers properly oriented. The strength of the springs is controlled by the capstan screws D′. The rotation of the rotary through 180° is controlled by the stops S′, which are adjustable and can be firmly clamped. The piece A′ is screwed to the rotary, one edge of whose projecting surface rests against the stop S′, thus fixing the position of the rotary. The spring clamps C, one north and one south, attached to the microscope standards, keep A′ in position against the stops.

The springs P″ are not used. They were designed to prevent jar when A′ is brought into contact with S′, but were not found necessary, and moreover introduce uncertainty as to whether A′ and S′ are actually in contact, which is of great importance. Practice enables the observer to make contact without jar, the sharp click made when the surfaces come together being proof of correct contact.

Objective cell (P and R′, Plate C).—The cell was constructed of such materials that the glass disks are supposed to fit snugly in the cell at all temperatures. Now it is of supreme importance that the operation of reversing the rotary should take place without any relative shift of the glass disks of the objective and its cell. A movement of even 0.001 millimeter would be objectionable. For this reason the reversal of the rotary necessary during the observation of each star is always made with extreme care, avoiding jerky motions and bumping against the stops.

To guard against the possibility of minute displacements of the glass disks during reversal, in June, 1912, adjustable pressure springs were placed in the cell. They are shown at x and y, Plate B. These were designed by Mr. Fischer and put in place in the United States Coast Survey shops. The pressure is regulated by means of adjusting screws z.

It is necessary to remove the objective and cell from the rotary in order to clean the tracks and carriage. For this, the screws T are removed and lifting rods screwed in the holes T″ made for this purpose, by means of which the objective and cell can be easily raised and removed. The objective is also removed for safety when the rotary is taken from the tube for cleaning.

Focusing rod (Plates A and F).—The focusing rod is of steel of one-fourth inch diameter, in three sections firmly joined. Its top terminates in a ball D which rests in a socket C in the arm B, and so is free to swing. The arm B is pivoted at P to the bracket A which is firmly screwed to the third section of the tube. B is easily reached by the observer from the upper south opening in the tube shown in the photograph (Plate G). When in its raised or vertical position it is held against the tube and out of the way by a spring acting on the pin K. To adjust the mercury surface, the observer lowers the arm B to a horizontal position, which allows the focusing rod to hang freely in the center of the tube. This position is made fixed and definite by an extension of the arm B coming into contact with the lower surface of an opening in the bracket as shown in the drawing. Thus the top of the rod when in the center of the tube is always at an invariable distance below the objective.

It is necessary that the focusing rod be of adjustable length. To secure this, its lower end G is threaded, so that the position of the end piece F is adjustable. The nut H serves to clamp F. The distance S shown in the drawing is taken as the measure of the focal length, being easily and accurately measurable. Its value is 9.5 millimeters for the position of best focus, which was used throughout the work.

To adjust the mercury surface in contact with the lower end of the focusing rod the two lower doors are opened and an electric light set outside the tube opposite the south door,

slightly above the level of the mercury surface. The observer looks through the north door at the illuminated rod and mercury surface, making the adjustment with one of the leveling screws of the mercury basin within easy reach (Plate H). For a discussion of the accuracy of this adjustment see page 37.

Mercury basin (Plates A and L).—The mercury basin and supporting base, including cork pad and sand box, were practically copies of those used in the Wharton zenith tube (Publications of the University of Pennsylvania, vol. 3, pt. 1, Pl. D). Briefly described, it consisted of a shallow copper vessel containing the mercury which forms the reflecting surface, its interior being a segment of a spherical surface of long radius. This vessel floated in a large cast-iron vessel with vertical sides, filled with mercury of an adjustable depth. Underneath this was placed a pulverized cork cushion, which rested on a heavy iron plate. This in turn rested upon a bed of sand 1 foot deep contained in an iron box. The latter rested upon the pier.

Although this combination was entirely successful, the large probable error of the latitudes found at the start lead to an overhauling of the instrument, which began with the mercury basin. It was felt that just as there are insensitive spirit levels, so there might also be insensitive mercury surfaces, and that in securing stability or freedom from disturbance by thus using a thin sheet of mercury in an amalgamated basin a sacrifice of accuracy might have resulted.

It may not be out of place to describe here an experiment showing the marvelous difference in sensitiveness to disturbance between mercury in an iron and in an amalgamated basin. The shallow copper vessel described above was filled with mercury and placed (unfloated) on the central pier. Removing the objective, the observer stationed himself at the top of the tube. In order to visibly agitate the mercury surface it was found necessary to *pound* hard on the tube with closed hand. The experiment was repeated with mercury in an iron vessel (unamalgamated). In this case it was found that merely *touching* the tube with the cushioned finger end would visibly affect the mercury surface. This sensitiveness is almost unbelievable when it is considered that the tube weighs a ton and rests on a pier distinct from the pier holding the mercury basin.

After many experiments with unamalgamated basins, which were found too sensitive to disturbance, it was finally decided to adopt the basins and support shown in the photograph (Plate L). In order to be certain that the level as given by the mercury surface is correct to a hundredth part of a second of arc it was felt that the depth and extent of the mercury surface must be considerably increased. This is not without theoretical justification. But increasing the mass can only be secured at the expense of sensitiveness—that is, the larger mass is more liable to tremors, as was experimentally verified. This added sensitiveness was neutralized by floating the basin in an outer basin. That the flotation greatly increased the stability of the reflecting surface was abundantly verified by experiments. The mass of the inner basin with its contents is so great that the slight tremors communicated to it by the mercury in the outer basin are without effect, especially as the tremors themselves are speedily absorbed at the sloping edge of the outer basin.

Both basins M and N are of cast brass. The inner basin was electrically covered with a coating of copper one-sixteenth inch thick, both inside and out. The inside of the outer basin is also copper coated. All copper surfaces were amalgamated. The sloping sides of each basin make an angle of about 30° with the horizontal.

No claim is made that this form of basin actually gives results superior to the shallow curved basin first used, there being no experimental evidence for it one way or the other. Greater confidence however was placed in it. The writer is not aware of any experiments that have been made to test the errors of level of fluid surfaces—the order of magnitude of these errors are even unknown. Only this is submitted: An amalgamated vessel with the free mercury *apparently* poured off can be tilted through any angle from the horizontal and still form a good reflecting surface. The exact dividing line between this case and that of an amalgamated shallow mercury basin is difficult to specify. The tilting error should be a continuous function of the mercury mass in the basin.

Track and carriage (Plates B and C).—The tracks were cut from a solid piece of steel *b*, which is firmly screwed to the projecting bosses N of the main casting B. It is so massive

that absolute rigidity is secured. One of the tracks upon which the carriage moves is an inverted V, while the other is flat, shown at *f* and *f'*, respectively. The carriage is shown at *g*, the necessary motion being imparted to it through the U-shaped arm pivoted at *v*. *h* rests in the nut *m*, in which it can be carefully adjusted by means of the small set screw shown, without looseness or binding.

The carriage is kept firmly pressed to the tracks by means of two springs *z*, one on each side, forming parts of thin brass plates screwed to the carriage. These bear against the under surface of rectangular slots *z'* cut in the track, against which they slide without interfering with the motion of the carriage. To remove the carriage from the tracks for cleaning, it is only necessary to unscrew one of these springs and lift the arm *h* from the nut *m*. The carriage and tracks are carefully cleaned and oiled every four weeks.

The plate holder is firmly held in the carriage by means of the rod *i*, which is attached to the springs *s*; *i* bears against the small boss (7) on top of the plate holder, pressing it down and back against the stops *t* on the rear edge of the carriage. In inserting the plate holder care is taken to press it back with a corner of the slide after the latter has been withdrawn. Contact of the holder with the stops *t* is thus assured, a matter of great importance. The rod *i* insures their remaining in contact. To remove the plate holder from the carriage after the exposures have been made the slide is reinserted and locked, when a gentle pull on the handle disengages the rod *i* and the holder can be withdrawn. The plate holder is slightly narrower than the opening in the plate holder formed by the walls *u*, so that it need not touch the carriage on the sides, thus possibly interfering with its orientation.

Plate holders (Plate E).—The plate holders furnished with the instrument were used up to February 23, 1913, when the larger and more massive ones designed by Mr. Fischer were employed. The original holders will not be described at any length here. They were 40 mm. long by 31 mm. wide, taking a plate 26 by 37 mm. In changing from clamp north to south, or vice versa, it was always necessary to shift the plate holder on the carriage on account of the narrowness of the plates. The new and wider plate holders avoid this difficulty. They are 50 mm. long, 52 mm. wide, and 9 mm. deep, holding a plate 45 mm. square. Each holder is in three parts—the holder itself, which is made from a single piece of brass, the top or cover, and the slide. The photographic plate rests in the space T. When the cover is in place, two springs *s* press the plate firmly against the three supporting pins P, which are directly opposite the points of pressure of the springs. The spring T presses against the edge of the plate, forcing it against two pins Q on the opposite wall. A three-point pressure and support is thus secured in both directions. Bolts A, operated by pins R, working in slotted holes, secure and lock the cover to the holder. The handle of the slide B is shown at C. Its locking device, which is easily operated by the thumb while holding the plate holder, is shown. When moved to the right, as indicated by the dotted line, the slide is unlocked and can be withdrawn. The peculiar form given to the handle C of the holder is necessary, owing to the fact that when placed in the instrument the holder is almost in contact with the lower surface of the objective, so that a handle falling below the holder must be provided. Two such plate holders are used.

Magnetic clutch (Plate D).—The problem of mechanically moving the carriage on the tracks in each of two positions of the track, direct and reversed, without appreciably jarring the instrument is solved by means of a magnetic clutch, the suggestion for which was made by Mr. E. D. Tillyer. This mechanism will now be described.

The clutch rests upon two posts P (3, Plate C), which are screwed to the casting A. It is necessary to provide accurate adjustment for it, sideways and vertically. Adjusting screws (4, Plate C) operating against the posts 3 allow accurate adjustment sideways. The vertical adjustment was made by the makers, probably by filing the posts 3. For the details of this adjustment see small diagram on Plate C. When once adjusted binding screws 5, working in the slots 6, firmly clamp the clutch to the tube. The object of the adjustment is to place the clutch Y concentric with the armatures *j* and *j'*. It was made originally by the makers and has not required any attention since. In removing it from the tube for cleaning or repairs care is taken to unscrew only one of the adjusting screws 4, so that in replacing it returns to exactly the same position on the tube.

The mechanical connection of the clockwork D, which is the source of power and of which the pinion A forms a part, with the clutch K, is easily followed through the train of connected gear wheels B. The clockwork D and pinion A are not a part of the tube, so that vibrations of the clock governor which might adversely affect the observations are avoided (see Plates A and G). Accordingly the pinion A at times gets out of gear with B, depending upon weather conditions. Adjusting screws at the base of the clock (Plate G) allow this to be remedied and a fine adjustment of A to B made.

E is a dust-proof box which is usually kept closed. Through binding posts, which are not shown in this section, the electric current from 15 dry cells in series (called the secondary circuit), is led to the springs *s*, which are in contact with the conducting strips *b* and *e*. Wires lead from the latter through holes near the axis *c* to the coil *w*, wound with very fine enameled wire. *v* is a muffler of thin velvet cloth, kept in place by the metal band *x*. It serves to diminish the shock when K is attracted to its armature *j* (Plate C). The axis *c* is free to move longitudinally. When the secondary circuit is closed the armature *j* or *j'* on the rotary which is opposite K, concentric with it and distant 1 millimeter, instantly draws K to mechanical contact. If K is in rotation, its motion is accordingly transmitted to the armature *j*, and thence to the carriage of the rotary, through the gear wheels *o*. The shaft *a* (Plate C) under the track *f* transmits the motion in the reversed position of the rotary. By following through the gearing it is easily seen that a positive rotation of the clutch K will drive the carriage from west to east in either position of the rotary, so that the west-east motion of a star is always followed.

Returning to Plate D, the longitudinal motion of the clutch K is controlled by the adjustable stop N. The spring *s'* acts when the current is broken, draws K back, and breaks the mechanical connection of clutch and armature without interfering with the rotation of K.

Tube clock (Plate J).—The tube clock rests on a cast-iron pillar which in turn rests on the observing floor. The floor is strengthened at this point by two stiff posts P (Plate A), so that the clock is kept in its correct position (see above). To the governor are attached two springs bearing against a horizontal hard rubber disk in the top of the clock, the pressure against which furnishes the necessary speed control.

Automatic exposure control (Plate I).—To the back of the clock is attached the mechanism for making the automatic exposures. The large central wheel *b* is not normally connected with the clockwork. Against its edge bear two contact springs *a* and *d*, which are terminals of the secondary circuit mentioned above. Behind the smooth periphery against which the spring *a* bears, visible in the photograph, the wheel *b* is cogged, engaging with a *loose* pinion on an axis (in the lower right-hand corner, not visible). This axis, which is connected with the clockwork, terminates in a magnetic clutch *h*, visible in the photograph. The loose pinion just mentioned is fastened to an armature concentric and adjacent to the magnetic clutch. Now it is clear that if a current (called the primary current) is passed through the clutch the armature will be attracted and the pinion set in rotation, which in turn will set the large exposure wheel *b* in rotation.

It will be noticed that the periphery of the exposure wheel is notched. When in the course of its rotation, set up as just described, the terminal *a* of the secondary circuit arrives at one of the notches the secondary circuit is broken, the tube clutch K ceases to act, and the moving photographic plate is brought to a standstill. The notches in *b* are so spaced as to give in this way six separate images of each star, in sets of three, with a sufficient interval for reversing the rotary. For these exposure times and rest intervals see page 37. The contact point of *a* in the photograph is seen in the center of the long notch corresponding to the time for reversal.

The speed of rotation of the exposure wheel is such as to carry it through a complete revolution in approximately two minutes. As the exposures on each star cover 110 seconds, a complete revolution is not passed over. To operate the primary current requires six dry cells.

In order to automatically stop the exposures when the sixth and last image has been secured, the teeth on the back of the exposure wheel are cut out for a space of about 1 inch, thus throwing it out of action automatically at the proper time, or when the sixth exposure has been completed.

In order that the exposure wheel may be in proper adjustment, it is necessary for the contact point of *a* to be set very close to the raised part of the periphery corresponding to the first exposure, so that when the exposure wheel starts to rotate the secondary circuit will be closed within a small fraction of a second. This fine adjustment of the contact point is secured by a pin in the contact wheel which can be brought against a stud on the vertical spring C which is adjustable in position. By means of the milled head *g*, which is connected with the contact wheel (shown in Plate G), the observer turns the wheel until these are in contact. It is then in adjustment.

In setting for the next star after an exposure, it is not necessary to turn the wheel back. It can be set to zero or its initial position by simply turning forward, past the stud mentioned above, which is beveled on its lower side, allowing the pin to pass, then turning back to zero. This is found to be a great convenience.

A relay operating a buzzer is connected with the secondary circuit. This enables the observer to tell when the exposures are being made—if the buzzer is ringing, the carriage will be in motion. As soon as it stops ringing for the third time, the observer must immediately reverse the rotary, for which 11 seconds is allowed.

To obviate the observer's keeping count of the exposures, an auxiliary electric circuit is attached to the contact wheel, which rings a bell near the end of the third exposure. This is the signal for the observer to prepare to reverse, which he does immediately upon completion of the exposure then being made.

The primary circuit, mentioned above as passing through the magnetic clutch below the contact wheel, is controlled by a key called the observing key, placed alongside of the astronomical clock. Supposing the telescope properly prepared and the plate holder in the carriage, the operation of "observing" a star is as follows:

At the computed time of starting (see p. 24) the observing key is pressed down, thus closing the primary circuit, the tube clock having previously been set in motion by turning the lever *e*, and the cardboard cover removed from over the objective. The magnetic clutch connected with the tube clock immediately attracts its armature and the connected pinion, which starts the contact wheel *b* in motion. This, moving uniformly, makes and breaks the secondary circuit which controls the motion of the carriage, according to the peripheral notches. The secondary circuit is broken automatically at the end of the exposures as explained above, but the primary circuit must be broken by the observer by opening the observing key.

It is not necessary to use the key and primary circuit in making exposures. With tube clock running, the observer may merely turn the head *g'* slightly to the right, when the secondary circuit which starts the carriage is closed. The secondary circuit is made or broken at will by turning *g'* to the right or to the left. This method of observing is used for faint stars or on thick nights for the purpose of giving longer exposures to the stars than given by the automatic control (see p. 38). It is also used in observing "orientation stars" (p. 31), for clock rate and tube orientation (p. 34).

Before starting an exposure the carriage must be west of the center of the tube. A mark fixed by trial shows where its exact position should be. The adjustment is made by means of the screw *j''*, Plate C, which by being pressed inward engages the armature *j* or *j'*. Turning it by hand, the position of the carriage can be slowly shifted to any desired point on its track.

One-half the stars of each group are usually observed "clamp north" and one-half "clamp south." When a star has been observed, the carriage is left in proper position for the next star, provided a change of clamp is not contemplated. To change clamp, the carriage must be run clear across the track before observing the next star. This can be done either by using the tube clock and clutch, or by hand, using the thumbscrew *j''*.

Screen.—For the brighter stars, a screen is placed over the objective, reducing the diameters of the images to about one-half. It is made of cheese cloth stretched over a circular wire frame with a handle attached, and is placed inside the rotary just above the objective.

Timing clock.—An astronomical clock, Strasse and Rohde, with a Rieffler pendulum, mercury compensation, is used for starting the exposures at the correct instant. It stands near the north wall of the building, and is bolted to the face of a long concrete column which rests on a concrete pier.

The clock time T of starting the exposures on any star is given by

$$T = (\alpha_0 - 55.^s0) + (\delta T + \delta\alpha),$$

where α_0 is the right ascension of the star for the beginning of the year, $\delta\alpha$ the reduction to apparent place, δT the clock error, and $55.^s0$ is one-half the period of the automatic six exposures (p. 37).

The clock error δT is obtained before beginning each evening's work by eye and ear observation of a single zenith star, made with the zenith telescope in the adjoining observatory. The beat of the clock can be heard at the visual instrument. The whole operation of observing and computing δT hardly requires five minutes.

$\delta\alpha$ is tabulated in advance at intervals of 10 days. It is easily obtained by subtracting the mean α from the apparent α of stars in the American Ephemeris whose declinations lie between about 37° and 41°. In this way its computation can be avoided.

The observing program is made out on seven cards, one for each group. On the back of each card, $\delta\alpha$ is given. It is usually constant for all the stars of any one group, so that its tabulation is simple. The first part of T, or α_0—55^s0, is tabulated on the card opposite each star which is to be observed. By combining the constant corrections δT and $\delta\alpha$, the values of T for the night are obtained mentally, and immediately written down in the observing book. The whole operation of computing and writing down the values of T for two groups of stars does not require more than three minutes. T is always computed to 0^s1, the observer aiming to press the observing key to this degree of accuracy. But such accuracy is a refinement, since an error of several tenths of a second is of no consequence. For a discussion of the influence of T on the observations, see page 33.

The photographic plates.—These must be 45 millimeters square. They are cut from commercial plates, 4 by 5 inches, on a special form devised for the purpose. The cutting tool is a hardened steel wheel, which is much better than a diamond cutter for the purpose, as it allows the plates to be cut with great accuracy. The plates are kept in a box specially constructed for them, in which the exposed are kept in one end, the unexposed in the other.

Many brands of plates were tried, but the Lumière Sigma were the only ones found to be of the required speed. A very pronounced loss of sensitiveness of these plates was noticed during the spring and summer of 1914. It is due to this circumstance that so few complete groups were obtained during this period, the faint stars 35, 62, and 63 appearing to be entirely beyond their reach. There is no doubt that these plates had deteriorated in quality.

In September, 1914, our attention was called to the Paget Orthochromatic Extra Special Rapid plates. They were tried, with gratifying results, and used exclusively during the last month of observation.

Developing.—A constant temperature of 70° was used in the bath. The same developer was used throughout, dianol and sodium sulphite. The plate was kept in the developing bath from 7 to 10 minutes. After fixing, it was dried in alcohol (see p. 42). Usually six plates were handled at one time, containing the results of three complete nights' work.

Measuring the plates.—As a rule, an entire group of stars are photographed on each plate. They are arranged in two bands, those observed with clamp north lying in one band, while those observed with clamp south lie in the other (see Plate Q). These bands could have been made to coincide had the carriage track been longer, but for accuracy of measurement the two bands are preferable, since they can be measured more quickly, the effect of changes in the comparator being thus lessened.

If two stars photographed on one plate in the same position of the clamp have the same declination (within a few seconds), their images will overlap and so become unmeasurable. In that case the carriage is shifted along the track for a distance of about 3 millimeters before starting the exposures on one of the stars in question. For an example of this, see Plate Q.

Again, if the meridian zenith distance of a star is zero or nearly so, the images will overlap in pairs, making them likewise unmeasurable. In a case of this kind, the starting time T is altered slightly, to produce a small skewness, or just enough to separate the images. This is seen in Plate Q, where the zenith distance of star 51 is so small that the images are almost in contact.

For measurement the plate is so adjusted on the comparator bed that all the images in each band are seen in the field of the microscope when the screw is turned, the plate not being touched. After orienting (p. 31), the images at the extreme right of the plate are bisected, and the screw turned progressively until all the images of the band have been measured. In this way the stars, 3 to 9 in number, observed in any one position of the clamp, are measured in one movement of the comparator bed. When the images on the extreme left have been measured, the screw is turned back to the first set of images measured, to test for a possible movement of the plate in the process of measurement. The same band is then measured in reverse position. Only one setting on each image is made. To completely measure in this way a plate containing 8 or 10 stars requires from 30 to 40 minutes.

A specimen sheet of the measures and reduction of a plate (Group I, October 21, 1914), is now given. The reductions are carried through the derivation of the final corrected zenith distance △ of each star in revolutions of the comparator screw, reduction to the meridian being neglected. Its reduction to arc is made on another sheet to which △ has been transcribed.

The first column contains the star number, direction from the zenith, and position of clamp. The second and third columns contain the measures themselves, as they are put down by the measurer and in the order in which they are made. The fifth and sixth columns contain the measures with plate reversed. The check measures explained above are given. Readings of the thermometer attached to the comparator, taken when beginning and ending the measurement of each band, are also given. The columns △ are obtained by subtraction of the two preceding columns.

SPECIMEN SHEET.

Measurement and reduction of Plate I, October 21, 1914.

STARS, CLAMP NORTH.

Star.	Mark left 24°.2..24°.4		△	Mark right 24°.3..24°.6		△	Corrected △	Mean △
	r	r	r	r	r	r	r	r
3 S N	55.559	14.116	41.443	55.798	14.409	41.389	41.409	41.408
	561	149	412	798	389	409	407	
	530	154	376	824	394	430		
	55.550		41.410	55.807		41.409		
Screw cor.	+1	+2	−1	−1	+1	−2		
4 S N	53.235	16.432	36.803	53.459	16.726	36.733	36.772	36.771
	223	450	773	480	710	770	771	
	204	470	734	502	696	800		
			36.770			36.770		
	+2	+1	+1	+1	0	+2		
5 N N	49.290	20.401	28.889	49.569	20.610	28.959	28.912	28.918
	285	395	890	557	649	908	923	
	326	373	953	544	645	899		
			28.911			28.922		
	+2	+1	+1	+1	−1	+1		
6 S N	48.928	20.764	28.164	49.116	21.036	28.080	28.127	28.121
	910	792	118	125	010	115	116	
	899	799	100	156	010	146		
			28.127			28.114		
	−1	−1	0	+2	0	+2		
2 N N	39.414	30.275	9.139	39.683	30.496	9.187	9.156	9.153
	424	280	144	650	518	132	150	
	438	250	188	664	530	134		
			9.157			9.151		
	+1	+2	−1	0	+1	−1		
1 N N	35.428	34.250	1.178	35.710	34.455	1.255	1.215	1.215
	464	245	219	696	484	212	214	
	475	224	251	693	513	180		
			1.216			1.216		
	+1	+2	−1	−1	+1	−2		
	Check:			Check:				
	55.563			55.785				
	556			792				
	534			818				
	55.551			55.798				

SPECIMEN SHEET—Continued.

Measurement and reduction of Plate I, October 21, 1914—Continued.

STARS, CLAMP SOUTH.

Star.	Mark left. 24°.0..24°.2		Δ	Mark right. 24°.9..24°.5		Δ	Corrected Δ	Mean Δ
	r	r	r	r	r	r	r	r
10 N S	63.494	6.202	57.292	63.717	6.451	57.266	57.270	57.268
	480	224	256	702	456	246	265	
	484	219	265	730	440	290		
	63.486		57.271	63.716		57.267		
	+1	+2	−1	−1	+1	−2		
8 N S	49.338	20.355	28.983	49.534	20.610	28.924	28.946	28.945
	322	381	941	556	635	921	945	
	329	416	913	582	594	988		
			28.946			28.944		
	+1	+1	0	+1	0	+1		
9 N S	42.070	27.608	14.462	42.299	27.850	14.449	14.456	14.459
	084	621	463	322	857	465	462	
	083	644	439	334	872	462		
			14.455			14.459		
	+1	0	+1	+2	−1	+3		
7 N S	39.012	30.662	8.350	39.220	30.952	8.268	8.304	8.305
	995	698	297	239	939	300	306	
	981	718	263	271	929	342		
			8.303			8.303		
	0	−1	+1	+2	−1	+3		
	Check: 63.493			Check: 63.718				
	480			709				
	475			725				
	63.483			63.717				

Specimen photographic plate (Plate Q).—A print of the negative of Group VII, taken October 23, 1914, enlarged 3 diameters, is shown in Plate Q. One-half inch has been trimmed off each edge of the print.

The fine central line running across the plate is the reseau, by means of which it is oriented in the comparator while being measured. It lies very close to the zenith. The six images of each star are symmetrical with respect to this line, in sets of three, so that all the images of each star can easily be picked out.

The band of images on the left contains the stars which were observed "clamp south," there being six in all. The band on the right contains those observed "clamp north," of which there are eight. Immediately to the right of this band, near the reseau line, are the images of star 57. This star had been shifted off the band, as explained on page 24, it having the same zenith distance as star 58, whose images are seen alongside and to the left. The common zenith distance of these stars is 17″.

The images of star 51 in the left band are seen to nearly overlap. The zenith distance is but 1.6 seconds. Cases of this kind must be closely watched, so that when precessional motion causes the images finally to merge the starting time T must be slightly altered so as to produce a relative skewness and separation of the images.

Skewness.—This is illustrated in the images of star 57 mentioned above. The starting time T for this star appears to have been in error by 0.6 second. This error is unimportant (p. 33). Appreciable skewness is also seen in the cases of stars 52 and 53 in the left band, which are respectively the second and third stars, counting from the outside. As seen from Table 14, these stars differ 2.4 seconds in right ascension, so that 52 is exposed for 1.2 seconds too early and 53 the same amount late. The advantage of using both of these stars more than offsets the very small error introduced by this skewness.

The images of the double star 8 Lacertae, or 61 and 62 of our program, are shown in the right band, fifth and sixth from the end. The slight relative skewness visible is due to their small difference of right ascension, which is but 0.11 second.

The images farthest from the center, in the right band, are of star 60; its zenith distance is 9.2 minutes. The extreme ones in the left band are of star 56, which has been screened down to the moderate brightness shown here. The effect of the screen used is to reduce the diameters of the images about one-half.

Stray stars.—A number of stray stars, or those not exposed for, are shown on the plate, outside of the bands. Of course all stars which are in the field during the exposures will be photographed.

THE ELIZABETH THOMPSON COMPARATOR.

A photograph of the Elizabeth Thompson comparator is shown in Plate K. This comparator is of the fixed microscope type and adapted for measuring only one coordinate. The object to be measured is placed on a traveling bed, the movement of which is controlled and registered by means of a screw and divided head.

The screw is 14 millimeters in diameter and of one-half millimeter pitch. One end terminates in a spherical ball, bearing in an adjustable spherical socket. The nut on the traveling carriage is 5 centimeters long. Two springs press the carriage and nut against the screw. A 3-pound weight is attached to the carriage.

The rectangular hole in the bed, over which the negative to be measured is placed, is 1.5 by 3.5 centimeters. An adjustable mirror set below this opening serves to illuminate the plate.

The head, of 9 centimeters diameter, is divided into 200 parts. In measuring plates the intermediate divisions, which are shorter, are disregarded and the readings recorded to 0.001*r* only. The intermediate divisions were utilized only in the process of testing and calibrating the comparator, where greater accuracy was desired.

The whole revolutions are registered on the outside concentric head, which is connected with the screw head just described through differential gearing. It is divided into 80 parts.

Microscope.—The power employed in measuring the plates was generally 30. With difficult objects a power of 15 was occasionally used. The diameter of the field is 3.85 millimeters.

In the focus of the objective are two threads called horizontal threads, 0.18 millimeter apart, parallel to the screw. Perpendicular to these are a pair of threads 0.04 millimeter apart for measuring lines or star trails, and a single thread to be used when star images are to be measured. The thread intervals given above are not their actual distances apart but the distance at the conjugate focus or at the object measured.

The orientation of the threads can be accurately adjusted and fixed by means of the collar and set screws visible in the photograph.

As the comparator was originally constructed, on the bed of the carriage was set a mech anism for holding, clamping, and orienting the plates which were to be measured. This is fully described on page 29. It was removed in November, 1912, and the four clips for holding the negative shown in Plate K substituted.

Calibration of the comparator.—The tests and calibration of the comparator which are now to be described were made at the United States Bureau of Standards, Washington, by the writer. The facilities of the bureau were kindly placed at his disposal by the director, Dr. S. W. Stratton. Special acknowledgment is due Dr. P. G. Nutting, of the bureau staff, for valuable advice and suggestions.

Value of one turn in millimeters.—The mean linear value of one turn of the comparator screw was determined several times by comparison with two of the calibrated scales of the bureau. A power of 100 was used. The scales were fastened securely to the carriage bed after orienting. Illumination of the lines was secured by means of a mirror placed above the scale in the vertical plane of the microscope. The mean results were as follows:

Scale:	One turn.	Temp.	Wt.
Scale of Zeiss comparator, P T R II 173	0.499780 mm.	21°	1
Nickel-steel decimeter scale, B S 244	.499804 mm.	23°	2
Adopted mean	.499796 mm.		
Probable error	±.000008 mm.		

Irregularities of long period.—The irregularities of long period were determined by means of measurements made on a Grayson ruling. These rulings on glass are excellent for this purpose on account of the fineness and perfection of the lines, which are but 0.001 millimeter in thickness. The corrections to the five revolution points were determined, with the following results:

TABLE 1.—*Long period screw corrections.*

Unity=0.0001r.

Date.	10r.	15r.	20r.	25r.	30r.	35r.	40r.	45r.	50r.	55r.	60r.	65r.	70r.
1911.													
Feb. 13.....	0	−1	+ 4	+ 7	+ 6	+ 7	+ 4	+ 0	+ 2	+7	+3	+2	0
15.....	0	+2	+ 1	+ 3	+ 6	+14	+11	+10	+12	+8	+7	+2	0
18.....	0	+4	+12	+13	+17	+12	+ 9	+10	+ 8	+5	+2	0	0
Mean...	0	+2	+ 6	+ 8	+10	+11	+ 8	+ 9	+ 7	+7	+4	+1	0

The mean probable error of one of the above mean corrections, computed from the variations in the table, is $\pm 0.00014r$.

The long period corrections indicated above are so small and vary so slowly that it will not be necessary to use them in making the latitude reductions. The small error due to their neglect can affect only the mean declinations, being entirely eliminated from the latitude variation. Even in the declinations it can amount to only 0.003 second at the maximum, on account of the symmetry of the corrections with respect to the central or $35r$ point.

Irregularities in one turn.—These also were determined from measurements on the Grayson ruling, with the following results:

TABLE 2.—*Observed short period corrections.*

Screw.	Corrections.	
	Series I.	Series II.
0.0 r.....	0.0000 r	0.0000 r
.2.....	+ .0023	+ .0019
.4.....	+ .0009	+ .0006
.6.....	+ .0008	+ .0003
.8.....	− .0012	− .0017
1.0.....	.0000	.0000

From a graph of the mean results of these two series, the following table of adopted corrections was formed:

TABLE 3.—*Adopted screw corrections.*

Screw.	Corrections.
0.00 r to 0.02 r.....	0.000 r
.02 to .10.....	+ .001
.10 to .32.....	+ .002
.32 to .57.....	+ .001
.57 to .69.....	.000
.69 to .96.....	− .001
.96 to 1.02.....	.000

Comparatively speaking, these corrections are large, although small when reduced to angular measure, the maximum effect on an individual latitude being 0.03 second. These errors are due, it is presumed, to some inaccuracy in the spherical bearing of the screw, perfection in which is extremely difficult to attain. They should cause no concern in this investigation. By progressively shifting the position of the series of plates to be measured its effect on any one star can be completely eliminated. On account of the number of stars in any one group its effect on the mean latitude given by one group on any night is a vanishing quantity. These corrections are therefore of little final importance, although they have been used in the reductions.

A peculiar systematic error.—In testing the comparator, using a high-power ocular and Grayson ruling, the following facts were noticed: If a setting was made on any line, at $10r$ for example, running the screw up from $5r$ (weight descending), and then the same setting made

running from 15r down (weight ascending), a systematic difference of 0.005r was obtained. It is to be understood that the final bisection was always made against the weight and therefore in one direction. The final bisection in the first case was made after turning back only about one-quarter of one turn, as is customary. But if this turning back movement amounted to a whole turn, the difference disappeared.

The cause of this systematic error is not clear. At the writer's request Dr. Frank Schlesinger made a series of test measures with one of the measuring engines of the Allegheny Observatory, but no similar action was discovered. It must be considered a peculiarity of this particular instrument. The writer had no opportunity to investigate the matter further.

Fortunately the error in question is easily eliminated. Measures are always made running against the weight, the final setting being made without overrunning, which an experienced observer can easily do. In cases where overrunning has occurred the observer is instructed to always turn back at least two revolutions before making the second attempt. In measuring the three images forming each group the screw was turned back two revolutions after measuring the first image, then again after measuring the second. In this way the error is completely disposed of. With observations strictly made in this way tests with high power ocular and Grayson ruling showed the performance of the comparator to be excellent.

Adjustment of the comparator.—In the final form of the comparator there is but one adjustment to be made. The single vertical thread used in making the bisections must be set perpendicular to the direction of motion of the carriage. To make this adjustment, an auxiliary glass plate was used, ruled with a pair of perpendicular lines. These were ruled on the ruling engine of the United States Coast Survey. The plate was secured to the carriage bed and so adjusted that when the comparator screw was turned one of the lines remained accurately at the intersection of the cross hairs in the microscope. When this had been perfected the vertical thread was set parallel to the vertical line on the glass by means of the slow motion adjustment already described. In order to eliminate any error of perpendicularity of the lines on the glass, the above process was repeated with glass upside down. No difference was noticed.

The accuracy of this adjustment depends upon the sensibility of the eye to parallelism of two lines. According to Nutting[1] this sensibility is 5′, which means that the probable error of a single setting is about 2′. The effect of an error of this magnitude upon the observations is entirely negligible, since it is proportional to the versed sine of 2′, an extremely small quantity. The error moreover is equivalent to an error of scale, which is completely eliminated from each night's observation.

Optical axis of the comparator microscope.—There is no adjustment provided for setting the optical axis of the microscope perpendicular to the bed of the carriage. The amount of the error in the direction of the coordinate measured was determined in the following way: Two negatives with images impressed were glued together, with the film on the outside, so that the images were in two parallel planes 3 millimeters apart. One of the plates was cut smaller than the other. The horizontal distance apart of two neighboring images, one on each plate, was determined. The measures were repeated with plates upside down. The difference of the two results was 0.052r, from which it is found that the telescope is tilted in this coordinate by an angle of 15′.

An error of this kind will affect measured distances if there are irregularities in the thickness of the plate. Taking into consideration the small size of the plates used, this irregularity should not amount to more than 0.1 millimeter. The corresponding error in the measured distance, due to the above tilt of 15′ in the optical axis, is 0.4 μ, or 0″.008 in φ; but it is to be noticed that this error is eliminated by measuring the plate in reversed position, as is always done.

The mechanism on the carriage bed for orienting the plates which was used up to November 10, 1912, will, for the sake of completeness, now be briefly described.[2]

---

[1] Outlines of Applied Optics, p. 135.

[2] For a view of this device see photograph of the comparator in "Geodetic Operations in the United States, 1909-1912, A Report to the Seventeenth General Conference of the International Geodetic Association."

Two straight bars 5 centimeters long and 5 millimeters square were set on the bed on opposite sides of the central hole perpendicular to the carriage motion. Their orientation in the plane of the bed was controlled by adjusting screws fixed in the bed. A spring set behind and acting on each bar enabled it to be used as a spring. The bars thus acted as jaws, between which a plate to be measured was firmly held. The bars are controlled by milled heads through a cam action. By turning the head each bar becomes a fixed orienting base, or a pressure spring, at the will of the observer. In measuring "plate right," the *marked* edge of the plate is placed against the right bar, which had previously been drawn back against its stops by means of the connecting milled head. The left bar is then released against the opposite edge of the plate, holding it firmly. For measuring "plate left," the marked edge is placed in a similar way against the left bar, which has now been drawn against its stops, and the right bar released, acting as a spring.

Four springs fastened to the bed press the plate vertically against the flanges of the two metallic boxes containing the mechanism just described. The film is thus always at a fixed distance from the microscope, doing away with the necessity of refocusing on each plate.

Adjustment of orientation mechanism.—Suppose a star trail has been photographed on a plate which is to be measured. If, when the plate is inserted in the orientation mechanism as described above, the star trail is parallel to the vertical thread in the microscope, both for plate right and plate left, the orientation bars are in adjustment. If not, by means of the adjusting screws behind each bar, the error can be corrected. Now it is important to note that if this adjustment is correct for one plate it is correct for all, provided—

1. There is no change in the azimuth of the tube;
2. There is no change in the relation of bars to measuring thread;
3. That the *marked* edge of the negative is in proper contact with the side of the plate holder during the exposures and also in proper contact with the bar during measurement;
4. That the plate holder is in proper contact with the "stops" on the traveling carriage of the zenith tube.

The weakest point in this chain is (3). Before a plate was inserted in the plate holder its edge was tested on a level surface for possible irregularities. If it could be "rocked," showing the presence of a projecting knob of glass near its center, it was rejected. After the plate had thus been tested and placed in the holder a spring in the back of the holder pressed the tested edge of the plate against the opposite side, insuring contact.

After this adjustment has been once made, it is unnecessary to secure star trails on subsequent plates for orienting. The plates can be inserted in the jaws formed by the bars, with the assurance that they are properly oriented. This is a great convenience, as no attention need be paid to orientation except after a long interval, when another star trail is secured to test the adjustment. For the effect of errors of orientation in measuring the plates see page 32.

Beginning with the use of the reseau on November 11, 1912, a complete change in the method of orientation was made, doing away with much of the uncertainty residing in the method previously used and which has just been described.

RESEAU.

A piece of heavy plate mirror *g* was fitted to the opening in the film side of the plate holder, the slide or shutter being supposed removed. Its thickness was such that when in contact with the film it projected slightly above the outside surface of the holder. It does not fill the opening exactly, a certain looseness of fit being essential to its proper action, to be described presently. Two small projecting knobs *p* were left on one edge of the plate near the corners. A fine line *r* was ruled on the silvering across the center of the plate parallel to the imaginary line connecting the outside surfaces of the knobs. This glass plate was cemented to a thin brass plate *b*, in which a central hole slightly smaller than the glass had been cut. The accompanying drawing is a perspective view of reseau and frame.

The reseau was made to fit over a small hole in a desk in the observing room, in which position it remains permanently. Exactly beneath the center of this hole on the lower floor of the building, about 9 feet distant, is placed a small electric lamp, the light from which is controlled by a button near the reseau, within reach of the observer. The reseau is used as follows:

After a group of stars have been photographed on a plate, the holder is removed from the instrument and placed over the reseau, the slide being first removed. The glass part of the reseau fits into the opening in the holder, the silvering coming into contact with the film. The front edge of the holder is now kept pressed firmly against the projecting knobs on the reseau's edge during the printing of the reseau line by the light from below. Only a few seconds' exposure is required.

Adjustment of reseau.—The idea underlying the use of the reseau is to have on each exposed plate a sharp line printed or marked, by means of which it can be oriented on the bed of the comparator by simply placing this line parallel to the vertical or measuring thread of the microscope. Accordingly it is necessary that the printed reseau line should be parallel to the prime vertical, or to a star trail where it crosses the meridian.

Before making the adjustment of the reseau the zenith tube must previously have been oriented (see p. 34).

In adjusting the reseau line, a star trail or its equivalent, to be soon described, is impressed on the plate and its parallelism with the printed reseau line determined by measuring their distance apart at two widely separated points. The error of parallelism is then computed and one of the projecting knobs on the reseau edge filed away by the computed amount. The operation is repeated until accuracy is secured. But since two plate holders are used, it may happen that the adjustment may be correct for one holder and not for the other, due to minute differences in their construction. In this case the interior edge of the second plate holder against which the reseau knobs bear must be filed away until the adjustment is correct for it. The accuracy of construction of the new plate holders and reseau, which were made in the United States Coast Survey shops, was such that no adjustment was found necessary.

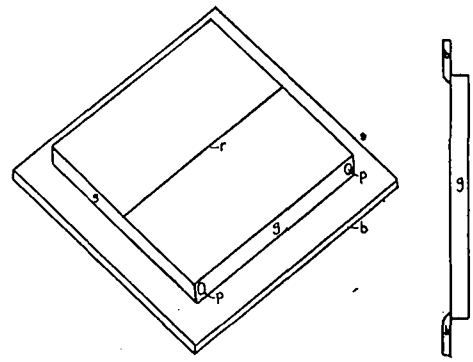

In measuring plates on which the reseau has been printed in this way it is only necessary to place the plate on the carriage so that the reseau line is parallel to the measuring thread, it being held firmly on the bed by means of four clips. The screw is first set at 35 revolutions and the plate moved so that the reseau line almost touches the thread. The plate is then ready for measurement.

In securing parallelism of the prime vertical and reseau line, a better method than the use of star trails is available. Two point images of a star are secured on opposite sides of the meridian at the same hour angle without reversal of the rotary. Obviously the line joining these images is accurately parallel to the prime vertical at its meridian crossing. The perpendicular distance of each of these images from the printed reseau line can be accurately measured, the difference in distance giving the error of parallelism. The greater the distance of these images apart on the plate the greater is the accuracy attainable. In actual practice this distance has been taken at 70 seconds of time, giving a separation of 20 millimeters. Usually each image is given 10 seconds exposure. The method of procedure is as follows:

Forty-five (10+70/2) seconds before the clock time of transit of the star chosen the carriage with plate inserted is set in motion, it having previously been placed so that the center of the plate is 3 millimeters west of the optical axis. After running for 10 seconds the carriage is stopped, and 70 seconds counted off on the clock, when the carriage is again set in motion. In this way two images with 10 seconds exposure each are secured on the plate,

widely separated and symmetrically placed with respect to the center of the plate. Stars thus observed are called "orientation stars." In the following table the results of measurement of all the orientation stars observed since March 27, 1913, are collected. The computed angular error of orientation is called i. This angle is considered positive if the reseau line makes a positive angle with the prime vertical taken as the axis of X, the observer being supposed to look down upon the plate in the holder, glass side up, the handle of the holder being toward the observer.

A new reseau was used during 1914, so that the values of mean i for this year are not comparable with those of the previous year. The results for the two plate holders A and B are kept distinct, since i is of course a function of the plate holder.

TABLE 4.—*Orientation errors of reseau line.*

Date.	i (Holder A).	Date.	i (Holder B).
	′		′
1913—Apr. 1	−4.0	1913—Mar. 27	+1.3
Apr. 17	+1.0	Mar. 31	−5.0
Apr. 18	−2.8	Apr. 1	−0.2
Apr. 30	−0.4	Apr. 20	+2.7
July 21	−2.6	Apr. 25	+0.5
Aug. 20	−2.0	July 15	−1.8
Aug. 24	−0.8	Aug. 19	−5.3
Nov. 1	−2.1	Aug. 21	−2.7
		Nov. 4	−2.2
Mean	−1.7	Mean	−1.4
New reseau:			
1914—Mar. 22	−4.6	1914—Jan. 6	+2.5
Mar. 24	+1.0	Jan. 26	+0.4
June 16	−0.4	Feb. 11	+0.3
Sept. 22	−0.3	Feb. 26	−0.9
		Apr. 13	−1.0
		Oct. 2	+1.9
Mean	−1.1	Mean	+0.5

From the above is derived—

Probable error of one determination of i, $\pm 1.'4$.

It is of importance to know what portion of this probable error of one determination of i is due to known errors, such as errors of measurement, printing of images and reseau line, and errors due to stellar oscillations. The data for this are already at hand. It has been found (p. 94) that the total probable error of each image, including the star oscillations, is ± 0.0043 mm., and that of printing and measuring a reseau line (p. 42) is ± 0.0010 mm. The probable error of the distance between each stellar image and the reseau line is then ± 0.0044 mm. From this and the known distance between the two images (20 mm.) it is found that the probable error of one determination of i should be $\pm 1'.1$. Comparing this with the value actually found, $\pm 1.'4$, we conclude that the greater part of the error in determining i is due to errors of refraction (oscillations) and measurement, and that only a small part is caused by instability and errors of contact of surfaces which are supposed to remain accurately in touch. This is a conclusion of some importance, since it puts our faith in orientation by contact methods upon a mathematical basis.

It is to be especially noted that the plate edge is no longer a factor in its orientation.

Effect of orientation errors upon the latitude.—The effect of errors of orientation upon the latitude will now be considered. The total true orientation error, or deviation of the vertical thread of the microscope from the true prime vertical which is imagined to be impressed upon the plate, is made up of two parts: (*a*) Error of orientation of the printed reseau line; (*b*) error in setting the microscope thread parallel to the reseau line. These have been considered separately in the preceding pages. We conclude that the probable error of the true orientation error i_0 is about $\pm 2.'5$, which means that occasional errors of 6 minutes are to be expected.

Simple geometrical considerations show that the error in any measured distance D resulting from the above orientation error i_0 is proportional to the product of i_0 into the difference in

hour angle of the images whose distance apart D is to be measured. If the exposures are correctly made, therefore, errors of orientation are without effect on the latitude. Calling $\triangle T^s$ the error made in starting exposures on any star, the resulting error in the measured distance is found to be, neglecting signs,

$$\delta D \text{ (millimeters)} = 0.00017 i'_o \triangle T^s. \tag{1}$$

The error in starting the exposures, $\triangle T^s$, has the effect of shifting the set of three images taken before meridian passage sideways with respect to the set taken after meridian passage by the amount, in millimeters,

$$S = 0.584 \triangle T^s. \tag{2}$$

The relative shift S will be called "skewness." It can be seen in some of the stars in Plate Q. Skewness is due to the following seven causes:

1. Error in the assumed right ascension of the star.
2. Error in the determination of the clock correction.
3. Personal equation in determining clock correction.
4. Personal equation in pressing the key which closes the primary circuit and starts the carriage.
5. Clutch lag, due mainly to friction.
6. Error in determination of the rotation time (110 seconds) of the contact wheel controlling the exposures.
7. Accidental starting errors.

By measuring in the comparator the skewness on a succession of nights, which can be easily done, the combined effect of 3, 4, 5, and 6 can be determined and eliminated by correcting the starting time by the amount thus indicated, $\triangle T$ being determined from equation (2). The error (1) can be eliminated in the same way. The only remaining errors are 2 and 7.

If the clock correction, 2, is in error all the images for the night will be askew. The algebraic signs of δD will be opposite for north and south stars, as can easily be shown, so that a systematic error in the latitude for that night will result. The clock correction should therefore be determined with some care.

It is seen from formula (1) that for a maximum value of i_o of 6′, $\triangle T$ must be in error by 0.5 second in order to affect the latitude by 0.″01 ($\delta D = 0.0005$ mm.). Now it should rarely happen that both i_o and $\triangle T$ should be in error by these extreme amounts. Putting the case in terms of probable error, assuming the probable error of the starting time T to be ± 0.2 second and of $i_o \pm 2'.5$, we get from (1)

$$\text{p. e. of } \phi = \pm 0.''002.$$

It can be concluded that nothing is to be feared from orientation errors, provided reasonable care is exercised in keeping the amount of the skewness small.

A second order error resulting from the hour angle error $\triangle T$ appears in the corrective term "reduction to the meridian," which is not considered above. With $\triangle T$ less than one second, it is a vanishing quantity.

ADJUSTMENTS OF THE ZENITH TUBE.

Level.—An important feature of the reflex zenith tube is the elimination of the level, wholly or in part, depending upon the distance d of the second Gaussian point from the focal plane. Let l be the deviation from the vertical of the axis of rotation of the rotary; let l_m be the projection of l upon the meridian, positive if toward the north; let F be the focal length. The correction to the latitude due to level error is then

$$\delta\phi = \tfrac{1}{2} \frac{d}{F} l_m; \tag{1}$$

d is considered positive if the second Gaussian point is above the focal plane. For $d = 1$ mm. and $l_m = 10''$, this gives

$$\delta\phi = 0.''00103.$$

On page 46 d has been shown not to exceed 1 millimeter. The level error l_m can always be kept less than 10 seconds, the average value being about 3 seconds. It is adjusted by the leveling screws at the base of the top section of the tube (see Plate G). That the functioning of the instrument is entirely independent of the level is thus assured.

(NOTE.—The value of one division of the rotary level is 5″.7.)

Adjustment of the speed of the carriage.—In order to obtain images of the maximum density the carriage must move from west to east with the same speed as a zenith star, measured in the focal plane. It is clear that the accuracy of this motion in nowise affects the measures, since short or long trails furnish the same data as point images. The method of making the adjustment for speed is as follows:.

A bright star culminating within about 2 minutes of the zenith is selected. The carriage is started 40 seconds before the clock time of its meridian passage, an exposure of 10 seconds being given. The objective is then covered, the carriage being still kept in motion. In 70 seconds or thereabouts the objective is uncovered and a second exposure of 5 seconds made.

If the speed of the carriage has not been properly adjusted, the two images obtained in this way will be separated by an amount depending upon the error. The relative position of the large (10s) and small (5s) images will show whether the clock is moving fast or slow. By measuring the distance apart of the images and comparing with the total length of carriage run the percentage error in speed can be computed. Suppose for example that the automatic normal six exposures with their five rest periods require 110 seconds to complete, as is actually the case. Suppose that the above speed determination showed that the carriage and tube clock were moving 0.2 per cent slow. The balls of the clock governor would in that case be raised and the automatic exposures retimed until, after repeated trials and readjustments perhaps, they were found to run through in 109.8 seconds, or 0.2 per cent fast. To insure accuracy, the timing should be done on a chronograph.

This method of adjustment is quite accurate, since if the images are not exactly coincident the elongation is readily detected. A separation of centers of 0.02 millimeter is easily distinguishable. The error of this adjustment need not therefore exceed one part in a thousand. The corresponding error in a normal exposure of 14 seconds is only 0.004 millimeter.

It is to be noted that if the speed of the carriage is thus adjusted for a zenith star the "following" will be slightly in error for stars of 10 minutes zenith distance by the amount one part in five hundred. This is too small to be distinguishable in the exposures.

Orienting the tube.—Between the second and third sections of the tube is a simple mechanism for rotating in azimuth the upper portion of the instrument. (See Plate H.) The amount of the rotation is read off on two diametrical improvised paper scales. This is used only for the first or rough adjustment in orientation, the accuracy attainable being but 1 or 2 minutes.

Orienting the tube consists in placing the carriage tracks parallel to the prime vertical at its point of intersection with the meridian. The adjustment is made in the following way:

A star bright enough to "trail" is selected. The carriage is set in motion 40 seconds before the star's meridian passage and allowed to run for 80 seconds. A very large image of the star, with two trails attached, ingoing and outgoing, is thus secured. If these trails are exactly opposite each other at the points where they join the central image, the orientation is perfect. By roughly orienting the plate in the comparator and measuring the lateral displacement or skewness of the trails the exact amount of the error can be determined. By dividing the displacement thus found by the total run of the carriage in 80 seconds (23.4 mm.) the angular orientation error is computed. If this amounts to 2 minutes or more, correction is made between the second and third sections, as explained above.

After the adjustment has been thus approximately made the process is repeated and the error redetermined. If still more than 2 minutes, it is again corrected as above. If less, the adjustment is made by moving one of the stops s on top of the rotary. Only one of these should be used—as for example the south stop. By means of the reading microscope the orientation

error can be very accurately set off and adjusted. It should be explained that only small errors can be thus corrected on these stops, for otherwise the centering of the magnetic clutch on the top section with its armature on the rotary would be interfered with and the proper transmission of the motion of the clock to the carriage prevented. The final accuracy of the adjustment can be tested by another repetition.

The above described adjustment is merely for the purpose of securing correct "following," thus securing good star images. An error of orientation causes a small elongation of the images in the direction of the measured distance D, but the elongation is in the same direction for both images, and so is without influence on the measures.

Determination of reversal angle.—Theoretically the rotary must reverse through 180°. This of course can not be attained in actual practice, so that means must be provided for determining the error. Obviously a graduated circle on the rotary read by two opposite verniers will give the required angle, but it was feared that the precision attained in this way would not be sufficiently great, since the maximum error it was thought advisable to allow was fixed at 5 seconds. Recourse was therefore had to reading microscopes. A full graduated circle is not essential. Two small scales were substituted in its place, each made up of three parallel scratches on silver 0.01 inch apart (M and M′, Plate B).

The value of the reversal angle is obtained as follows: The central line of each scale M is bisected with the thread of the reading microscopes, both before and after reversal, or in each position of the clamp. The value of one division of the microscope head is 10 seconds, so that the angle is easily read to single seconds. Let

ϵ=excess of reversal angle over 180°.
N_n=reading of north microscope for clamp north.
N_s =reading of north microscope for clamp south.
S_n =reading of south microscope for clamp north.
S_s =reading of south microscope for clamp south.

It is easy to show that ϵ is determined from the equation—

$$\epsilon=\frac{N_n-N_s}{2}+\frac{S_n-S_s}{2}. \tag{2}$$

(NOTE.—The reversal is made through the east point.)

Effect of ϵ on the latitude.—Simple geometrical considerations show that if exposures are made at the moment of meridian passage the correction to the latitude depending upon ϵ is proportional to the second power of ϵ and is accordingly a vanishing quantity. Since all exposures are necessarily made at a distance from the meridian, terms depending on the first power of ϵ are introduced. Let the mean distance corresponding to any pair of stellar images from the meridian imagined to pass through the plate be denoted by ζ; let the distance between the two images be denoted by D, all measurements being in millimeters and in the focal plane. By clamp N is meant that the observation of the star started with clamp north, a similar meaning being attached to clamp S. The correction to the measured distance D due to error in reversal angle is—

$$\delta D=\pm\zeta\,\epsilon''\sin 1''. \tag{3}$$

The upper sign is for clamp S, the lower for clamp N, the star being south of the zenith. For a northern star the signs are reversed. We suppose D to be without sign.

In practice, three pairs of images are taken at mean distances ζ_1, ζ_2, and ζ_3 from the meridian. The correction to the mean of the three corresponding distances is then

$$\delta D_m=\pm\tfrac{1}{3}\,(\zeta_1+\zeta_2+\zeta_3)\,\epsilon''\sin 1''.$$

The values of ζ are practically constant for all stars and correspond to the hour angles 13, 30.5, and 48 seconds, respectively. The slight variation in ζ due to the small differences in declination of the stars is without appreciable effect. Multiplying these three values of

the hour angle in turn by the linear speed of a zenith star in the focal plane, namely, 0.292 mm. per second, the values of ζ are found. We obtain

$$\delta D_m = \pm 8.91\ \varepsilon''\ \sin 1''.$$

Since a change of 1 millimeter in D corresponds to a change of 20 seconds in φ, the latitude, the correction for all stars whether north or south becomes

$$\delta\varphi = \pm 0''.000864\ \varepsilon''. \tag{4}$$

From (4) it appears that an error of 10″ in the reversal angle ε produces an error of only 0″.009 in φ. Moreover, since the stars of each group are divided equally between clamp north and clamp south, it is seen from (4) that the corrections are canceled in the group mean. Little attention need be paid therefore to the accuracy of reversal of the rotary. In practice ε is easily kept less than 5″. The stops (*s*, Plate B) controlling the angle of reversal are sufficiently stable, making it seldom necessary to determine ε. About two determinations per month usually suffices.

If the azimuth adjustment (p. 34) has been made with the south stop, only the north stop should be used in adjusting ε, otherwise the azimuth adjustment would be affected.

Adjustment of optical axis.—In this instrument the lower surface of the objective is accurately plane, so that if it is level when the axis of the rotary is vertical the optical axis will likewise be vertical and in adjustment. By means of a specially devised level, the lower surface of the objective can be easily leveled. The adjustment can be made by means of the three push screws (T, Plate B). In practice, it was not considered best to use these screws on account of the extreme importance of absolute rigidity in connecting the cell of the objective with the rotary. In their place wide strips of tin-foil were used. On account of the small field of the instrument there is no need of an accurate adjustment of the optical axis.

Plate center.—The plate center is defined to be the foot of the perpendicular drawn from the optical center of the objective to the photographic plate. With instruments using a large angular field it is necessary that the location of this point be known with considerable accuracy. In the case of the zenith tube, if the photographic plate is horizontal the plate center is coincident with the image of a zenith star, and no corrective terms are necessary. The effect produced by an error in level of the plate is accordingly to be examined. Since the moving carriage is at the same point of its track for corresponding images, we can suppose the plate at rest. A simple geometrical construction shows that the effect of an error of level (in a north-south direction) is to shift each of the two images in the same direction by the same amount, so that their distance apart remains unaffected. The equivalent focal length will correspond to the level plane drawn through the intersection of the prime vertical on the plate with the hour circle corresponding to the particular image-pair considered. There being three such pairs of images, with three corresponding hour circles, the final effective focal length is to be taken as drawn from the optical center to the mean of these three planes. Since this mean distance is constant and the same for all stars, no error is introduced. We conclude that errors of level of the photographic plate or carriage tracks are entirely without influence on the measures.

Adjustment of focus.—In order to obtain the position of best focus, a special metal frame for holding a photographic plate, to take the place of plate holder, was constructed in the Coast Survey shops. When placed on the carriage the holder and plate tilted at an angle of 27°.5 with the horizontal, in an east-west direction. With carriage at rest, a bright star is allowed to trail across the plate. The point where the image of the trail is sharpest is noted and marked and the distance of this point from the carriage bed measured. By comparing this distance with the position of the film when the regular plate holders are used, the error of the adopted focus can be obtained.

On November 9, 1911, the focusing scale was finally set at 9.5 millimeters (*S*, Plate F), where it remained without change until the end of the work.

Using the method just described, several determinations of the position of best focus were made, the results of which are shown in the table below. S is the computed value of the scale reading.

TABLE 5.—*Determination of best focus.*

Date.	S.	Temp.
	mm.	°
1911—Oct. 24	9.5	+10.0
Oct. 25	10.6	.....
Nov. 3	9.8	+ 5.8
Nov. 7	9.4	.....
1912—Feb. 11	9.0	− 6.2
1913—Jan. 1	9.3	+ 3.0
Mean	9.6	

The mean is in close agreement with the adopted value, 9.5 millimeters. The first four determinations given above were made with an improvised tilted plate, and are not so accurate as the last two.

It is seen that the stellar focus can be determined with an accuracy the error of which is about one part in ten thousand for a single determination. The excellence of the objective is thus demonstrated. The observations are not sufficiently numerous to determine the temperature coefficient relative to that of the focusing rod. If it exists it must be small. This is a great advantage, since it does away with the necessity of changing the setting *S* of the focusing scale from summer to winter.

Accuracy of placing the mercury surface in contact with the focusing rod.—It is important that the surface of the mercury be quite accurately in contact with the lower surface of the focusing rod when lowered. This secures constancy of focal length, aside from temperature changes. The adjustment is always made at the beginning of each evening's work.

In order to determine how precisely the contact of rod and mercury surface can be made the "sensibility" of the eye to this adjustment was tested by adding to the mercury in the basin a small measured amount. The least amount of added mercury noticeably affecting the contact of rod and mercury surface was taken as the required sensibility. By computation it was found that this minimum amount raised the level 0.019 millimeter (basin not floating), which is the sensibility sought. The probable error is about one-third of the sensibility, or 0.006 millimeter. In the extreme case of a star whose zenith distance is 10 minutes this probable contact error leads in an error of but 0.0007 second in the latitude. It is concluded that the focal length is perfectly stable in so far as its mechanical adjustment is concerned.

Hour angles of exposures.—With the clock correctly rated (p. 34), the total time for the six exposures, including the rest periods, was found to be 110 seconds. Combined with the known distances on the exposure wheel governing the exposures (Plate I) this gives the following hour angles or times of beginning and ending each of the six exposures:

	Exposures 1 and 6.	Exposures 2 and 5.	Exposures 3 and 4.
	s	*s*	*s*
Beginning	55.0	37.6	20.2
End	40.5	23.1	5.7

Beginning and end of exposures 4, 5, and 6 are to be reversed. The exposure time of each image is thus 14.5 seconds; interval between exposures 2.9 seconds, giving a separation of images of 0.85 millimeter; time allowed for reversal, 11.4 seconds.

Reduction to the meridian.—The formula for the reduction to the meridian applicable to all stars of the program is

$$r = [6.4265]\, T^2,$$

where T is the hour angle. The values of r for the beginning and end of each exposure are as follows:

	Exposures 1 and 6.	Exposures 2 and 5.	Exposures 3 and 4.
	″	″	″
r (beginning).....	0.808	0.378	0.109
r (end).....	.438	.142	.009
Mean.....	.623	.260	.058

On account of the curvature of path it may be questioned whether these means are the true values of the reduction (see p. 13). On account of their constancy however the matter is of little real importance. If the middle point of each exposure had been selected for computing the reduction to the meridian, instead of the end points, the mean value would have been 0.300 second.

The mean of the three mean values given above is 0.314 second, which is the constant correction which will be adopted for all stars for reduction to the meridian. It is applied to the mean declination of each star, so that no further account need be taken of it, except in cases where one or more of the six images are missing, when the appropriate correction is applied.

On unfavorable nights the faint stars of the program are observed "four exposures" instead of the usual six. In that case the automatic exposure method is discarded and the contacts controlled by hand, the observer doing the timing by the clock (see p. 23). The exposure time for each of the four images now is increased to 24 seconds, with 1 second between images, and 12 seconds for reversal. In this case the correction for reduction to the meridian is found to be 0″.328, so that a correction of +0″.014 is necessary for stars observed in this way.

Correction for refraction.—By differentiating the refraction formula and inserting numerical values the refraction correction for a zenith star becomes—

$$\delta z = 0''.0168\ Z' \quad (Z' \text{ in minutes of arc}).$$

Since δz is proportional to the zenith distance, it is fully taken account of by adding 0″.00280 to μ, the geometrical scale value (p. 40), and is not further considered.

SCALE VALUE.

On account of the small field of the instrument it will be unnecessary to make the troublesome reduction of the measures of position of star images which is involved with photographic instruments of larger field than ours. It can accordingly be assumed that arcs are strictly proportional to linear distances on the photographic plate. The equation of the instrument is, on this assumption:

$$\varphi = \delta \pm \tfrac{1}{2}\, mD, \tag{1}$$

where φ is the latitude, δ the declination of an observed star, m the scale value in arc, and D the measured distance, in revolutions of the comparator screw, between the two images of the star. Putting

$$\mu = \tfrac{1}{2}\, m,$$

μ will for convenience be called the scale value in place of m.

If a number of stars of known declination are photographed on the same night, a series of equations (1) can be formed, from which the unknowns φ and μ are to be obtained by a least square solution. This method is the only one which can be conveniently employed in determining the scale value in an instrument of this type. It is necessary that the declinations δ be known with considerable accuracy. In determining them two methods may be followed: (1) making use of the results contained in existing catalogues; (2) using results of a single special determination by a modern meridian circle.

The second method was deemed preferable, as the uncertainties of proper motion make results depending on (1) unreliable. It is to be noted that any *constant* error in the declinations

used, such as would be produced by using an erroneous latitude, or nadir point, in their determination, is without effect on the determination of scale value. More serious however is the effect of short period or even accidental division errors of the meridian circle, which would produce systematic errors in the scale value determination. The preferable course would be to have the declinations determined near the epoch at several observatories in order to reduce both accidental and systematic errors to a minimum.

The chosen scale stars were divided into three groups, A, B, and C, in such a way that one group is available for observation at all times of the year. They were chosen from the adopted list of latitude stars, with the addition of eight suitable stars of large zenith distance, to give greater weight to the determination. These additional stars are designated in the general list in Table 14 by the letters *a*, *b*, *c*.

The stars composing the scale groups are as follows: Group A—10, 11, 12, 13, 14, 2*a*, 15, 16, 17, 18, 20, 2*b*, 3*a*, 21, 22, 23, 3*b*, 24, 25, 3*c*. Group B—35, 36, 37, 38, 39, 40, 41, 42, 6*a*, 43, 44, 45, 46, 47, 48, 49, 50. Group C—52, 54, 55, 56, 57, 58, 59, 60, 7*a*, 63, 7*b*.

Through the courtesy of Dr. W. W. Campbell the positions of all of these stars were obtained with the meridian circle of the Lick Observatory. The resulting declinations reduced to 1913.0 are given in Table 14, column 13. The proper motions were obtained by comparing with all available older catalogues. These results form the basis of the determinations of scale value which follow. Generally all the stars of the group were observed; in rare cases where on any night one or two were missed mean values were used for the missing star in the least square solution for that night.

The individual values of μ have been collected in the following table. τ and t are respectively the mean temperatures of the telescope and comparator.

TABLE 6.—*Scale value.*

Group A.				Group B.				Group C.			
Date.	μ	τ	t	Date.	μ	τ	t	Date.	μ	τ	t
	″	°	°		″	°	°		″	°	°
1912—Jan. 19.	9.9776	− 2.3	+20.9	1912—May 9...	9.9779	+11.0	+22.0	1912—Sept. 10.	9.9711	+21.6	+25.1
Jan. 21.	.9764	− 0.6	23.6	May 27..	.9745	+16.3	24.9	Oct. 1...	.9719	+12.1	25.9
Jan. 22.	.9781	+ 3.5	23.9	June 1...	.9789	+19.8	25.0	Oct. 4...	.9750	+18.0	25.1
Jan. 27.	.9789	− 4.3	22.3	June 20 .	.9701	+17.3	25.2	Oct. 5...	.9770	+17.1	23.0
Feb. 4..	.9778	− 8.4	22.1	July 2...	.9701	+19.5	28.1	Oct. 6...	.9729	+17.5	24.1
Feb. 6..	.9784	− 5.2	22.3	July 3...	.9734	+22.2	29.6	Oct. 7...	.9766	+17.5	26.7
				July 5...	.9698	+22.3	30.0	Oct. 16..	.9745	+10.5	23.6
Mean..	9.9779	− 2.9	+22.5					Oct. 20..	.9731	+11.7	20.8
				Mean...	9.9735	+18.4	+26.4				
1912—Dec. 9..	9.9805	− 2.0	+21.3					Mean...	9.9715	+15.7	+24.3
Dec. 12.	.9802	− 5.0	21.8	1913—June 5...	9.9741	+15.9	+26.5				
Dec. 28.	.9804	+ 1.3	22.4	June 9...	.9763	+ 9.7	22.6	1912—Oct. 26..	9.9764	+11.0	+23.4
1913—Jan. 14	.9830	− 0.8	21.4	June 18..	.9762	+18.5	27.8	Oct. 27..	.9771	+11.0	23.0
Jan. 21.	.9803	+ 0.4	21.7	June 30..	.9767	+23.2	30.2	Oct. 30..	.9769	+15.1	20.9
Feb. 1..	.9827	− 6.0	21.2	July 3...	.9757	+23.9	25.5				
Feb. 4..	.9810	− 0.5	21.1					Mean...	9.9768	+12.4	+22.4
Feb. 6..	.9813	− 5.8	22.6	Mean...	9.9758	+18.2	+26.5				
								1913—Sept. 4..	9.9784	+22.8	+23.3
Mean..	9.9812	− 2.3	+21.7	1914—June 17..	9.9741	+16.8	+29.8	Sept. 5..	.9772	+23.5	24.1
				June 19..	.9767	+18.0	24.1	Sept. 22.	.9775	+ 9.5	22.1
1913—Dec. 5..	9.9821	+10.0	+22.3	June 29..	.9754	+19.1	26.6	Sept. 24.	.9764	+15.3	21.4
Dec. 11.	.9836	− 1.9	23.6	June 30..	.9748	+20.1	24.1	Sept. 25.	.9754	+16.9	21.5
Dec. 15.	.9821	+ 2.9	22.2	July 3...	.9771	+20.7	25.3	Oct. 4...	.9774	+15.2	22.0
Dec. 19.	.9828	− 0.8	21.5					Oct. 13..	.9761	+ 9.7	21.7
Dec. 29.	.9828	− 0.9	23.0	Mean...	9.9756	+18.9	+26.0	Oct. 14..	.9775	+13.7	21.9
1914—Jan. 29.	.9827	+13.6	22.8					Oct. 22..	.9765	+ 7.3	23.2
Feb. 1..	.9835	+ 5.5	21.4								
Feb. 2..	.9833	+ 2.9	22.6					Mean...	9.9769	+14.9	+22.4
Mean..	9.9829	+ 3.9	+22.4					1914—Sept. 13.	9.9743	+13.2	+24.4
								Sept. 14.	.9780	+13.4	27.4
								Sept. 20.	.9753	+19.0	20.6
								Sept. 21.	.9746	+21.8	21.2
								Sept. 22.	.9751	+22.5	21.4
								Sept. 28.	.9749	+10.8	24.8
								Sept. 29.	.9739	+12.4	23.8
								Sept. 30.	.9758	+15.2	23.5
								Oct. 1...	.9763	+13.4	23.7
								Oct. 2...	.9757	+14.0	24.0
								Oct. 5...	.9762	+17.4	22.3
								Oct. 12..	.9810	+16.1	21.3
								Oct. 19..	.9751	+14.0	21.0
								Oct. 21..	.9803	+16.9	24.1
								Oct. 23..	.9764	+13.4	21.3
								Mean...	9.9762	+15.6	+23.0

Excluding results before October 26, 1912, for a reason which will appear presently, we have the following mean values of μ by groups:

	μ	τ	t
Group A	9″.9820	+ 0°.8	+22°.0
Group B	9″.9757	+18°.5	+26°.3
Group C	9″.9765	+15°.0	+22°.7
Unweighted mean	9″.9781	+11°.4	+23°.7
p. e.	±0″.0013		

The definitive scale value is accordingly

$$\mu = 9''.9781 \pm ''.0013 \text{ (includes refraction)}; \tag{2}$$

or, withdrawing the refraction term,

$$\mu = 9''.97531. \tag{3}$$

These group means show a well-pronounced temperature coefficient, which however is not borne out by a study of the individual values of μ within each group. The temperature range within each group amounts to 10°, which is great enough to bring out any temperature coefficient of the order indicated above. We are forced to the conclusion that the disagreement between Groups A and B and C is due to errors in the declinations assumed as basic. That they should be so large is surprising. Only systematic errors could produce as pronounced an effect upon μ.

The temperature coefficient will now be considered from other points of view.

TEMPERATURE COEFFICIENT (SEMI-THEORETICAL).

By definition the temperature coefficient is the coefficient of the temperature term in the expression for the angular equivalent of one term of the comparator screw. Let

a=coefficient of linear expansion of the steel comparator screw.
b=coefficient of linear expansion of the glass plate.
c=coefficient of linear expansion of the focusing rod.
S=pitch of comparator screw at 0° C.
L=length of focusing rod at 0° C.
T=temperature of instrument.
t=temperature of comparator.

It can be shown that the angular value of one turn of the comparator screw, or the scale value, is

$$m = \frac{1}{\sin 1''} \frac{S}{2L} \left[\frac{(1+at)\{1+b(T-t)\}}{1+cT} \right].$$

Expanding the expression in brackets and neglecting second order terms, there results

$$\mu = \tfrac{1}{2} m = \frac{1}{\sin 1''} \frac{S}{4L} [1 + (b-c)T + (a-b)t].$$

A short piece of the material from which the focusing rod was made, which was kindly furnished by Mr. Gaertner, and a specimen photographic plate were sent to the United States Bureau of Standards for the determination of their coefficient of linear expansion. The results, communicated by Director S. W. Stratton, were as follows:

$$\text{(glass)}\ b = 0.000\ 0077,$$

$$\text{(rod)}\ \ c = 0.000\ 0116.$$

Since the comparator screw is of steel, it can be assumed that a is equal to c. Putting $S = 0.50$ mm. and $L = 2585$ mm., the expression for μ finally becomes

$$\mu = 10'' + 0''.000\ 039\ (t - T). \tag{4}$$

The coefficient of $(t-T)$ in (4) may be called the semi-theoretical value of the temperature coefficient. It is seen to be only one-eighth the amount given by comparison of Groups A, B, and C noted above. Assuming the value given in (4) as correct, and taking 20° as the maximum variation of $(t-T)$ from its mean value, the greatest error entering into any individual latitude due to the neglect of the temperature term will be 0.047 second. The greater part of this will be merged into the declination correction, and so will be without influence upon the latitude variation. When it is recalled that the scale value enters into the latitude with opposite signs according to whether the star is north or south of the zenith, the effect of its temperature coefficient upon the mean latitude for any night is seen to be of the order of 0.001 second, and so is entirely negligible.

As a further check upon the temperature coefficient two plates containing a number of stars whose zenith distances are all large was measured at extreme temperatures in the following manner: The comparator and plate were left overnight in the observatory in the United States Coast Survey grounds during cold weather and the plate measured the following morning ($T_1 = +1°.6$ C.). The comparator and plate were then left for several hours in the dividing engine room of the United States Coast Survey building ($T_2 = +38°.5$) and the measures repeated. The differences of the results of the two series for each star are shown in the following tabulation. $\triangle$ is the distance measured, in revolutions, and $\delta\triangle$ the increment of the distance in the sense, $\triangle(38°.5) - \triangle(1°.6)$.

TABLE 7.—*Measures for temperature coefficient.*

	Star.	$\triangle$	$\delta\triangle$
Plate VII of Oct. 24, 1911	60	51 r	−0.012 r
	63	48	− .006
	7b	52	− .007
Plate II of Dec. 7, 1911	11	52	− .010
	12	63	− .017
	13	49	− .008
	14	50	− .009
	Sums	365 r	− .069 r

The increased reading per revolution per degree is accordingly

$$\delta R = -0.000\,0051\, r = -0''.000\,051.$$

Obviously the corresponding temperature coefficient of the scale value is equal to $-\delta R$. Accordingly from this series of measures

$$\mu = 10'' + 0''.000\,051\,(t-T). \tag{5}$$

Comparing (4) and (5), we find a good agreement in the temperature coefficients obtained by the radically different methods adopted. The conclusion that the large value obtained by the scale star groups is probably due to systematic errors in the adopted declinations is strengthened.

In order to be able to carry on the provisional reduction of the observations simultaneously with the observing, so that the performance of the instrument might be closely followed, it was necessary at the beginning of the work to fix upon a scale value. A least square reduction of the latitude observations made during June and July, 1911, was carried through according to equation (1), page 38. Boss's declinations in his "Preliminary General Catalogue" were adopted wherever available. For stars not found in Boss, positions from the older catalogues were used. The mean result was

$$\mu = 9''.97764. \tag{6}$$

(scale reading, 9.5 mm.; μ includes refraction).

The definitive value of μ, (2), page 40, differs from the provisional value (6) by only one-third of its probable error. The difference is so slight that it is not considered worth while to make the change. Accordingly the definitive latitudes have been reduced with the scale value (6), without temperature coefficient.

FILM DISTORTION.

It has generally been accepted that distortions of the photographic film are practically insensible; that they are at least as small as the errors arising from the appreciable size of the silver grains and from irregularities of outline of the stellar image.

Certain anomalous results continually appeared during the first year's work with the zenith tube which could only be explained on the assumption of violent and fortuitous changes in scale value. The presence of other sources of error, then unsuspected, complicated the analysis of their origin and delayed their detection. Suspicion of the stability of the photographic film finally became so strong that in October, 1912, a special series of observations was made to test the matter. Before making these tests however it was suspected that the distortion, if existent, occurred in the drying of the plate. The possibility of eliminating it by drying the plates in an alcohol bath was considered. The tests were accordingly made on air-dried plates (more accurately, box-dried plates; see p. 43) and on plates which were immersed in alcohol for 15 minutes before being allowed to dry, called shortly "alcohol-dried plates."

A reseau ruled with but one series of parallel lines spaced a millimeter apart was printed on a series of 40 plates. Twenty of these were box dried and 20 alcohol dried. All of the plates were then measured, as well as the reseau, with results contained in the following table:[1]

TABLE 8.—*Film distortion (first series).*

Reseau lines.	Measured distance.			Average expansion.		Probable error (one plate).	
	Reseau.	Box-dried plates.	Alcohol-dried plates.	Box dried.	Alcohol dried.	Box dried.	Alcohol dried.
	r	r	r.	μ	μ	μ	μ
16-14	4.003	4.006	4.004	+ 1.5	+0.5	±1.5	±0.7
17-13	8.007	8.011	8.007	+ 2.0	0.0	2.8	0.6
18-12	12.010	12.018	12.010	+ 4.0	0.0	4.1	0.7
19-11	16.011	16.021	16.011	+ 5.0	0.0	5.3	0.7
20-10	20.019	20.033	20.021	+ 7.0	+1.0	5.5	1.0
21-9	24.022	24.039	24.022	+ 8.5	0.0	6.3	0.8
22-8	28.022	28.043	28.022	+10.5	0.0	7.1	1.1
23-7	32.025	32.050	32.025	+12.5	0.0	7.9	1.7
24-6	36.029	36.060	36.032	+15.5	+1.5	9.0	1.6
25-5	40.034	40.066	40.035	+16.0	+0.5	9.4	1.7
26-4	44.036	44.072	44.037	+18.0	+0.5	9.6	1.6
27-3	48.040	48.078	48.044	+19.0	+2.0	9.3	2.7
28-2	52.048	52.085	52.050	+18.5	+1.0	7.6	2.2
29-1	56.052	56.088	56.052	+18.0	0.0	6.5	2.5
30-0	60.050	60.086	60.051	+18.0	+0.5	5.9	1.9
Mean	.....	.....	.....	+11.6	+0.5	±6.5	±1.4

NOTE.—One revolution=0.50 mm.; μ=0.001 mm.; size of plates, 26 by 37 mm.

The fifth column in the above table shows that box-dried plates are subject to a relatively large expansion. The seventh column shows this expansion to be extremely irregular from one plate to another. This irregularity seems to reach a maximum in a region three-fifths the distance from the center to the edge of the plate. From the mean value, $\pm 6.5\mu$, we deduce that the probable error in measuring an average zenith distance is $\pm 0''.13$, due to these distortions and the small additional error of measurement.

Results from the series of alcohol-dried plates are in striking contrast to these. From the numbers in the sixth column the average expansion of the alcohol-dried plates is seen to be very small, if indeed it exists at all. The agreement of the individual plates (column 8) is remarkably good, showing an entire absence of the disturbances present in the series of box-dried plates. From the mean value of the probable error, $\pm 1.4\ \mu$, the corresponding error of an average zenith distance is for these plates only $\pm 0''.028$, as compared with $\pm 0''.13$ for the box dried.

Beginning October 23, 1912, all plates were immersed for 15 minutes in an alcohol bath after washing and before being allowed to dry. This method was strictly adhered to until the close of the work.

[1] This table was published in the Astronomische Nachrichten, No. 4642. The box-dried plates were there called air-dried, since no reason was then known for distinguishing between the two methods of drying. The conclusions reached accordingly apply to box-dried plates only.

It is now clear why the observations for scale value made before October 23, 1912 were rejected. A least square reduction of the expansion of box-dried plates given in the fifth column of the above table showed that determinations of scale value made prior to this date should indicate a correction to the later determinations of

$$\Delta\mu = -0''.0074. \tag{7}$$

Comparing the mean values of μ in Table 6 before and after October 23, 1912, we find

$$\Delta\mu = -0''.0038, \tag{8}$$

or a value only one-half that given in (7). The cause of this difference will be considered further on.

Confirmatory results.—On the basis of the provisional scale value (6), corrections to the assumed declinations of all the latitude stars were obtained in the usual way. The resulting values are the declinations D_0 in Table 14. They are sufficiently exact to form the basis of a determination of scale value from equation (1), page 38, which will show the actual relation between the values before and after October 23, 1912, or for any epochs desired. The result will be valuable confirmatory evidence on the subject of film expansion.

If the latitude results from each of the seven groups of stars for each year are solved for μ by least squares, as outlined above, the constancy of the scale value can be tested from a comparison of the results. This reduction has been carried out, using all the latitude observations, with results shown in the following table. The quantity tabulated, y, is the correction thus found to $100\mu_0$; μ_0 is the provisional value (6).

TABLE 9.—*Values of y.*

	y.	Weight.		y.	Weight.
Period I:	″		Period III—Continued.	″	
1911—June 9-July 6 (all results)	+0.08	7	1912-13—Group II	−0.03	.....
July 15-Aug. 10	+ .29	7	1912-13—Group III	+ .14	.....
Sept. 30-Dec. 1	− .17	3	1913— Group IV	.00	.....
Group I	− .19	3	V	.00	.....
Period II:			VI	+ .01	.....
1911-12—Group II	− .34	5.1	VII	+ .03	.....
1911-12—Group III	−1.31	.7	I	+ .08	.....
1912— Group IV	− .40	2.2	1913-14—Group II	+ .02	.....
V	− .36	5.4	1913-14—Group III	− .04	.....
VI	− .33	2.9	1914— Group IV	− .09	.....
VII	− .43	3.1	V	− .02	.....
(To Oct. 20, 1912) I	− .55	3.6	VI	+ .12	.....
Period III:			VII	+ .06	.....
(From Oct. 23, 1912) I	− .05	.....			

The small weight found for y, Group III, is due to the lack of stars of large zenith distance in this group.

The persistently minute values of y throughout Period III show that a constancy of scale value has been reached, with no abnormal deviations present. Period I is seen to agree fairly well with Period III, showing that expansion of the film in this period is probably not present. In Period II this expansion is well pronounced. Taking the mean, by weights, we get

$$\text{Period II,}\quad y = -0''.396, \quad \text{or } \Delta\mu = -0''.00396. \tag{9}$$

This value of $\Delta\mu$ is in good agreement with the value (8) obtained from the regular scale groups. The distortion given in (7) is to be considered abnormal. The cause of the discrepancy will be pointed out later (p. 45).

The correction to the scale value given in (9) has been applied to all latitudes in Period II with the exception of the latitudes in Groups III and IV, November, 1911, to May, 1912 (See p. 45). This is equivalent to using for this period the scale value

$$\mu = 9''.97368. \tag{10}$$

Drying box.—Beginning some time in the fall of 1911, the exact date unfortunately not having been recorded, a drying box was very often used in drying the photographic plates.

This consists of a wooden box 5 inches square inside and 2 feet long, open at both ends. A tin pipe 3 inches in diameter passes through its center longitudinally. A wire-gauze platform is placed in the space between the pipe and box 3 inches from the top of the box, on which the plates to be dried are placed. The plates rest vertically against the box, with short edge vertical. Thus, if there is any gravity flow of the film, it will be in a direction at right angles to the measured distances, leaving them unaffected. A small oil lamp is placed under the lower end of the box with its chimney inside the tin pipe, which is in a vertical position. A draft of warm air is thus created in the space between the box and pipe, effectively drying the plates. A thermometer is placed alongside the plates. The temperature was kept below 80°. On account of evaporation of moisture the temperature of the plates themselves should be somewhat less.[1] Plates can be dried in this way in about one hour's time, which is about the time required in drying in the open air on a good drying day. This method was devised on account of the slowness of air drying in damp cold weather. By keeping the temperature in the box below 80° no injurious effect on the film was anticipated. This method of drying was continued for about a year, or until the adoption of the method of alcohol drying in October, 1912.

It was noticed that the use of the drying box falls in Period II, or the period of great scale-value disturbance. The question is at once raised, Can there be any difference between air-dried and box-dried plates? To answer this, in October, 1914, a further series of 18 plates were printed with the reseau, six of which were dried in alcohol, six in free air on a good drying day, and the remaining six dried in the box. It was not considered necessary to measure all of the reseau lines as in series I, page 42. The results of measurement are shown in the following table:

TABLE 10.—*Film distortion (second series).*

Reseau lines.	Measured distance.					Average expansion.				Probable error (one plate).			
	Reseau.	Alcohol dried.	Air dried.	Box dried (1).	Box dried (2).	Alcohol dried.	Air dried.	Box dried (1).	Box dried (2).	Alcohol dried.	Air dried.	Box dried (1).	Box dried (2).
	r	*r*	*r*	*r*	*r*	*μ*	*μ*	*μ*	*μ*	*μ*	*μ*	*μ*	*μ*
16–14...	4.003	4.007	4.003	4.006	4.003	+2.0	0.0	+ 1.5	0.0	±0.9	±1.3	±1.2	±0.7
18–12...	12.010	12.008	12.007	12.015	12.011	−1.0	−1.5	+ 2.5	+0.5	1.2	2.4	1.1	1.1
20–10...	20.019	20.022	20.018	20.035	20.025	+1.5	−0.5	+ 8.0	+3.0	1.4	2.6	2.7	0.8
22–8....	28.022	28.025	28.020	28.041	28.029	+1.5	−1.0	+ 9.5	+3.5	1.6	2.5	1.9	1.1
24–6....	36.029	36.040	36.040	36.060	36.046	+5.5	+5.5	+15.5	+8.0	1.2	2.3	3.4	0.9
26–4....	44.036	44.036	44.038	44.064	44.043	0.0	+1.0	+14.0	+3.5	0.8	1.4	4.0	2.8
28–2....	52.048	52.047	52.047	52.082	52.051	−0.5	−0.5	+17.0	+1.5	1.1	1.8	5.4	4.6
30–0....	60.050	60.049	60.054	60.103	60.057	−2.0	+0.5	+25.0	+2.0	1.3	(6.1)	6.2	4.3
Mean	.....	.....	.....	.....	.....	+1.0	+0.5	+11.6	+2.7	±1.2	±2.0	±3.2	±2.0

NOTE.—Temperature in drying box, 78° F. Time consumed in drying, 75 minutes.

From the numbers in the eighth column of this table it is seen that there is no appreciable expansion of the film in air-dried plates. Results for alcohol-dried plates, column 7, agree with those in series I. The probable errors, columns 11 and 12, show the advantage of accuracy to lie with the alcohol-dried plates, even if the results for the lines 30–0 are excluded. These extreme lines are at a distance of only 4 millimeters from the edge of the plate. The large probable error shown for them on the air-dried plates prove that large distortions of the film take place near the plate edge. In the alcohol-dried plates they are not present.

The ninth column agrees with Table 8 in showing the existence of a large expansion of the box-dried plates, the average expansion of the two series agreeing almost exactly.

The columns box-dried (2) in the above table need explanation. After the above series of box-dried plates were measured they were soaked three hours in water, redried in alcohol, and remeasured, with results shown in the columns box-dried (2). It will be noticed that the original expansion of these plates has almost disappeared, being reduced from 25μ to 2μ for the extreme distance. That these film distortions can be thus reduced is a curious fact. To explain

[1] The radiation from the hot pipe, which is only 1 inch from the plates, is probably an important factor, making for a higher temperature of the film than disclosed by the thermometer, which latter reflects these heat rays and so gives misleading temperatures.

it we can imagine the film when distorted to be in a state of strain, which is released by the resoaking in water and left in its original condition.

It is to be regretted that a more complete experimental treatment of the distortion problem was not possible. It was necessary to confine the experiments to the securing of data actually needed for the proper reduction of the photographic plates. The conclusions arrived at can be summarized as follows:

(*a*) Alcohol-dried plates give results subject to a smaller probable error than air-dried plates.

(*b*) Air-dried and alcohol-dried plates show no appreciable expansion of film.

(*c*) Box-dried plates in all cases have an expanded film, the amount of which is subject to great fluctuations.

(*d*) The expansion of box-dried plates can be made to disappear almost entirely by resoaking them in water and drying in alcohol.

It has been noted on page 43 that the film distortions in Period II (November, 1911, to October 20, 1912), determined by the two independent methods—first, measurements of the reseau; second, latitude results—do not agree. The reseau measures give about twice the distortions shown by the latitude observations. This can now be explained. Not all of the plates in Period II were box dried. When the weather was favorable they were very often dried in air in the usual way. These plates are not subject to expansion, as we have just seen. The number of the air-dried plates is sufficient to reduce the *average* distortion of this period to the amount shown by the latitude and scale value series.

The effect of film expansion, present in Period II, must now be considered. In the case of those star groups which are well balanced, where the mean zenith distance of the group is nearly zero, the harmful effect of uncertain film expansion is small, and can be safely ignored. But with Groups III and IV this is not the case. On account of the scarcity of suitable stars it was impossible to properly balance these groups. Sensible errors due to film expansion are consequently to be expected in these groups. Advantage was taken of the fact stated in (*d*) above to overcome this fault. In October, 1914, all of these plates, 68 in number, containing 391 individual stars, were resoaked in water, dried in alcohol, and remeasured. This remeasurement and rereduction meant considerable extra labor, but the improvement actually found in the results justified the work. The accidental and systematic errors of the original measures were clearly brought out. In the following table, which gives the mean results of the two series, the important systematic errors are clearly established:

TABLE 11.—*Mean results of old and new measurement of Groups III and IV, 1911–12.*

Star.	ϕ_1.	ϕ_2.	$\phi_2-\phi_1$.	Zenith dist.	Star.	ϕ_1.	ϕ_2.	$\phi_2-\phi_1$.	Zenith dist.
	″	″	″	′		″	″	″	′
33.....	3.26	3.08	−0.18	+8.2	31.....	3.17	3.17	.00	−0.5
24.....	3.35	3.14	− .21	+3.7	27.....	3.01	3.06	+ .05	−0.8
23.....	3.43	3.28	− .15	+3.5	21.....	2.92	3.01	+ .09	−1.7
22.....	3.24	3.10	− .14	+3.2	25.....	2.95	3.05	+ .10	−1.8
28.....	3.26	3.13	− .13	+2.7	32.....	3.06	3.11	+ .05	−1.8
30.....	3.28	3.23	− .05	+0.8	34.....	2.90	3.11	+ .21	−6.0
26.....	3.08	3.09	+ .01	+0.7	29.....	3.00	3.25	+ .25	−6.5

The column φ_1 gives the mean results of the original measures, the column φ_2 the mean results of the remeasurement. The differences are shown in the fourth column. Comparison of the fourth and fifth columns clearly establishes the fact that the treatment to which these plates were subjected has succeeded in releasing the expansion of the film. The individual latitudes given by the stars of these groups, pages 54 to 56, are those resulting from the remeasurement and not from the original measures. While theoretically it would have been better to have treated all the plates in Period II in this way, the advantage to be gained was not considered sufficient to repay the great labor involved. It is certain that the mean monthly latitudes are not affected by as much as 0.01 second through uncertain film expansions or irregular distortions.

POSITION OF THE SECOND GAUSSIAN POINT.

In order that the effect of level errors may be determined, it is necessary that the position of the second Gaussian point (S. G. P.) be found with a fair degree of accuracy. The specifications for the instrument called for an objective with second Gaussian point 1 centimeter below its lower surface, where it was proposed to locate the film of the photographic plate; in other words, coincidence of second Gaussian point and focal plane was desired.

It was not practicable to employ the usual laboratory method for locating the position of the second Gaussian point. In its place an indirect method was used, involving the determination of the focal length from stellar observations, as follows: Let

F = focal length of objective in millimeters;
s = pitch of comparator screw in millimeters;
m = angular value of one turn of the comparator screw.

The relation between these three quantities is—

$$F = \frac{1}{\sin 1''} \frac{s}{m}. \tag{1}$$

From the following known values of s and m

$s = 0.499796$ mm.; p. e., 1 in 62,000; page 27;
$m = 19''.9506$; p. e., 1 in 7,700; page 40;

we obtain from (1)

$$F = 5167.4 \text{ mm.} \pm 1 \text{ mm.}$$

The distance D from the film of the photographic plate as it rests on the carriage in the plate holder to the end of the focusing rod was carefully measured with a steel tape, giving

$$D = 2584.6 \text{ mm.}$$

The distance d of the second Gaussian point above the focal plane is then given by

$$d = \tfrac{1}{2} F - D,$$
$$\text{or } d = -0.9 \text{ mm.},$$

with an estimated probable error of ± 0.7 mm.

That the specification requirement in the matter of the second Gaussian point was fulfilled is thus verified. We can feel certain that the error of its location is less than 1 millimeter.

INVESTIGATION OF THE ACCURACY OF THE CARRIAGE MOTION.

During each complete observation for determining a star's zenith distance with this instrument the carriage containing the plate holder moves on a track in an easterly direction for a distance of 13 millimeters, then backward over the same portion of the track after reversal of the rotary. It is essential to the accuracy of the zenith distances secured in this way that the backward or reverse motion takes place in the same path as the forward motion, or more accurately expressed, the position of the plate with reference to the objective, measured in the direction of the meridian, must be identical for the two hour angles $\pm t$ of the star, where t has all values from 5 seconds to 55 seconds.

Such was the confidence of the writer in the stability of motion of the carriage, in the sense of the preceding paragraph, that it was only near the close of the series of observations that any serious attempt was made to investigate it.

During the winter of 1911–12 a pair of bright stars was observed with stationary plate for the purpose of securing data on this subject (p. 93). Results proved the superiority of the moving plate, showing that if there is any lateral displacement or looseness of the carriage it must be so small as to be masked by the errors of observation.

The matter remained in this state until 1914. Before closing the work it appeared desirable to investigate the subject further. There seemed no doubt that on account of the presence of

dust and gummed oil on the track and carriage a certain amount of lateral shift must be present. It remained to determine its average and maximum amounts.

The apparatus consisting of microscope and tripod stand, a photograph of which is shown in plate M, was designed by the writer to measure these carriage displacements. To Mr. E. G. Fischer are due the details of the instrument. It was constructed in the United States Coast Survey shops under Mr. Fischer's supervision.

In making the test measurements the objective is removed from the rotary, and microscope and stand substituted. The legs of the tripod rest on the ledge occupied by the objective cell, to which it can be securely screwed.

The photographic plate is replaced in the plate holder by an iron frame of the same dimensions as the plate. Across this frame are stretched two parallel spider threads 0.037 millimeter apart. The plate holder is set in the carriage as usual, except that its top and slide are removed. Directly beneath the holder and attached to the tracks is placed a small electric lamp, covered with yellow paper, giving an excellent soft illumination of the threads in the frame.

The microscope is adjustable on its stand by means of the screws shown in the photograph, enabling the spider threads on the frame to be brought to the center of the field of view. In the focus of the microscope is a single thread which can be adjusted parallel to the spider threads. A few trials serve to adjust the threads of the frame approximately parallel to the direction of motion of the carriage. A power of 60 was used in making the measurements.

The series of readings which follow were made on July 13, 1914. The track and carriage had been cleaned and oiled on June 29, so that a period of 14 days had elapsed during which it was possible for dust to have accumulated. Since the tracks are cleaned once each month, their condition on this date should be average.

Five series of observations were made. In each series the position of the threads of the moving frame in a north-south direction was measured at six equidistant points designated by the letters A to F in the table below. The measures were made at these points in both the forward and backward motion of the plate, designated in the table by clamp N and S respectively.

The method of making the measures is as follows: The carriage is placed at its extreme westerly position on the track, as in star observations, which position is designated by the letter A. The microscope thread is made to bisect the space between the parallel spider threads on the frame below. Two bisections were made in each position. By means of the clock and magnetic clutch the carriage is then made to move forward for 10 seconds (2.9 mm.) and the measures repeated. This position is called B. Similarly, measures at C to F are made at the equal intervals of 2.9 millimeters, the total range in motion being thus about the same as in stellar observations. It is to be particularly noted that since the clock and magnetic clutch are used in moving the carriage in these measures, the circumstances or conditions are exactly as in stellar observations. It is also to be remarked that the electric bulb is attached to the rotary, so that the illumination of the threads is the same in the two positions of the clamp, thus eliminating systematic illumination error.

TABLE 12.—*Measures to test carriage motion.*

Position on track.	Series 1.		Series 2.		Series 3.		Series 4.		Series 5.	
	Clamp N.	Clamp S.	Clamp N.	Clamp S.	Clamp N.	Clamp S.	Clamp N.	Clamp S.	Clamp N.	Clamp S.
	d.	*d.*	*d.*	*d.*	*d.*	*d.*	*d.*	*d.*	*d.*	*d.*
A	1.0	0.5	1.1	1.0	.1.4	0.5	1.4	0.7	1.5	0.5
B	1.6	.7	1.1	.8	1.1	.4	1.5	.6	1.6	.3
C	1.0	.8	1.5	.4	1.4	.6	1.5	.7	1.1	.4
D	1.1	.5	.9	.3	1.0	.1	1.0	.2	1.3	.2
E	.8	.7	1.0	.3	1.2	.1	.9	.3	1.4	.5
F	.8	.3	.9	.0	.8	.4	1.0	.5	1.2	.2

One division equals 0.00125 mm. Probable error of one recorded reading, ±0.09*d*.

It is necessary to correct the measures in the above table for (1) inclination of threads to direction of motion; (2) personality in measuring, micrometer head right and head left. A sufficiently close approximation to (1) is obtained by averaging the 10 values of the difference A–F. The result is —0.35 divisions. This must be applied to the readings at B to F proportionately to reduce to the A position. The personality correction (2) is obtained from the differences F in each series, and also from the A readings by taking the difference between clamp S, series 1, and clamp N, series 2, repeating through the five series. Since there has been no motion of the carriage between the last reading (0.5) of series 1 and the first reading (1.1) of series 2, the difference is clearly to be ascribed to personality. The mean of the nine values gives for the personality correction, clamp south, $+0.67d$.

Applying corrections (1) and (2) to the readings in the preceding table, the following results are obtained:

TABLE 13.—*Motion of carriage, corrected measures.*

Position.	Series 1.		Series 2.		Series 3.		Series 4.		Series 5.		Mean.	
	Clamp N.	Clamp S.	Clamp N.	Clamp S.	Clamp N.	Clamp S.	Clamp N.	Clamp S.	Clamp N.	Clamp S.	Clamp N.	Clamp S.
	d.	*d.*	*d.*	*d.*	*d.*	*d.*	*d.*	*d.*	*d.*	*d.*	*d.*	*d.*
A	1.0	1.2	1.1	1.7	1.4	1.2	1.4	1.4	1.5	1.2	1.3	1.3
B	1.7	1.4	1.2	1.5	1.2	1.1	1.6	1.3	1.7	1.0	1.5	1.3
C	1.1	1.6	1.6	1.2	1.5	1.4	1.6	1.5	1.2	1.2	1.4	1.4
D	1.3	1.4	1.1	1.2	1.2	1.0	1.2	1.1	1.5	1.1	1.3	1.2
E	1.1	1.6	1.3	1.2	1.5	1.0	1.2	1.2	1.7	1.4	1.4	1.3
F	1.1	1.3	1.2	1.0	1.1	1.4	1.3	1.5	1.5	1.2	1.2	1.3
Mean[1]	1.24	1.44	1.26	1.36	1.36	1.14	1.40	1.30	1.52	1.18	1.35	1.30
N–S	−0.20		−0.10		+0.22		+0.10		+0.34			

[1] Omitting F.

The maximum single difference or displacement of the carriage shown in this table is 0.7 division, corresponding to an error of 0″.017 in zenith distance. The probable error of a single difference due to errors of measurement alone is $0.13d$, so that we should expect occasional differences of $0.4d$ to appear, due to inaccuracies in measurement alone. It can be concluded that there is an error of the carriage motion of the same order of magnitude as the errors of measurement.

The means at the bottom of each column in Table 13 confirm this conclusion. These mean differences N – S can be taken as representative of the total effect of carriage displacement errors on a single star. Averaging the results from all five series there results

Probable error of mean displacement of carriage in one complete run ..... ± 0.14d. = .00018 mm.

One-third of this is due to errors of measurement. We conclude that the probable error of a single zenith distance due to lateral displacements of the carriage is $\pm 0''.0034$, or, for a pair of stars, $\pm 0''.0024$.

The means in the last two columns of the above table show that no systematic error is present which would affect in the same way a number of stars successively observed.

Another result of interest can be obtained from the two last columns. The motion of the carriage is there proved to be rectilinear for the range of 14 millimeters used. While this is not essential to the instrument, it is an advantage, rendering definite the conception of orientation and point image.

The final conclusion is that the errors of motion of the moving carriage, or displacements, are so small as to be absolutely without effect upon the latitude observations.

This concludes the investigation of the theory of the instrument and its accessories, and the errors to which it is subject. It has been shown in the preceding pages that with ordinary care in adjusting and handling the instrument all errors in the latitude due to maladjustments and imperfections of the instrument of whatever nature can be kept smaller than a hundredth of a second of arc. The high praise which Chandler (p. 9) bestows upon this type of instrument seems to have lost none of its force in the photographic form considered here. The additional advantages of the photographic form of zenith tube have been considered elsewhere.

PROGRAM AND LATITUDE OBSERVATIONS, PHOTOGRAPHIC.

STAR PROGRAM.

Stars chosen for observation must fulfill the following conditions:

(*a*) Their photographic magnitude must be greater than the ninth. With the most rapid plates available, the Lumiére Sigma, this seemed to be the limit of the power of the instrument. But, using the Lund Catalogue of the Astronomische Gesselschaft as a working catalogue, practically all of the stars listed in it as of the magnitude 8.5 or less were found to be too faint. To obtain a value of the actual limiting magnitude reached by this instrument the photographic magnitudes of the three stars which appeared to be on the edge of visibility under good conditions with a 14-second exposure were kindly sent by Prof. E. C. Pickering. The magnitudes thus secured showed that 9.2 is the limiting magnitude. (See table following.)

(*b*) The zenith distances must not be greater than about 10 minutes, and moreover must not exceed this value for a period of four years, or during the period of observations, which it might, through precession.

(*c*) The right ascensions must not be closer than 2 minutes and 10 seconds, which is the limit of the speed of the instrument. An exception to this is to be found in the case of stars whose right ascensions differ by 2 seconds or less, allowing them to be observed simultaneously. (See p. 90.)

(*d*) The algebraic sum of the zenith distances of the stars of any one group must be nearly zero, which is the usual condition imposed on all observations for latitude variation.

The stars were divided into seven groups. The number of these groups and their limiting right ascensions were not chosen according to any rule, but were determined entirely by the density of the stars available, taking into consideration requirement (*d*). The length of the groups accordingly varies from 1.1 hours in the case of Group VI to 3.6 hours for Group II. The intervals between groups varied for similar reasons. A great scarcity of available stars was found between 9 and 15 hours of right ascension. The scarcity was such that in the case of Groups III and IV it was not found possible to satisfy requirement (*d*) as nearly as was thought desirable. A better star program could have been selected had not the program been limited to "pairs."

The "scale stars" are designated in the list which follows by letters, preceded by the number of the group to which they belong.

The visual magnitudes given are from the A. G. Lund Catalogue. The photographic magnitudes of stars 17 to 29 are from the "Catalogue Photographique du Ciel," zone de Helsingfors. A few more were furnished by Prof. E. C. Pickering. The remainder were not available, and no especial effort made to secure them, being unimportant.

The right ascensions given are for identification, and are therefore only approximate. More accurate values were used in the observations (p. 24).

Declinations.—A preliminary adjustment of the catalogue declinations was made, leading to the system of declinations D_0. The proper motions μ' were computed from D_0 and all available star catalogues.

Almost all of the stars were observed at the Lick Observatory at the writer's request (p. 39). The declinations resulting from their observations is given in the column D (Lick). Declinations computed from Boss's Preliminary General Catalogue are given in the column D (Boss).

In the column D (final) are contained the definitive declinations resulting from observations with this instrument. In obtaining D it is tacitly assumed that the *system* D_0 is correct.

Now the declinations D_o were chosen in such a way as to lead to approximately the same mean latitude for Gaithersburg as is given by the visual instrument, namely

$$\phi_m = 39° \; 8' \; 13''.23.$$

The system D_o is therefore Auwers', since the declinations upon which ϕ_m depend were reduced to Auwers' system (see "Resultate" Band I).

It is of interest to compare the mean corrections to Boss and Lick, given in the table. These are $+0''.28$ and $+0''.29$, respectively, showing an almost exact agreement of the Boss and Lick systems, at least in this zone (38° 58′ to 39° 18′).

The mean difference of $0''.28$ between the Boss and Auwers system of declinations in this zone is worthy of special note. It shows that great uncertainty still exists in our absolute latitudes, due to the systematic errors of star catalogues. This refers only to latitudes determined by the Horrebow-Talcott method, or with zenith tube. Thus we obtain the following mean latitudes for Gaithersburg according to whether we employ the Boss or the Auwers system of declinations:

	ϕ (Gaithersburg.)
Boss	39° 8′ 12″.91
Auwers (p. 78)	39° 8′ 13″.19

It is very desirable in geodetic operations to have the absolute latitude determined with an error not much greater than 0.10 second. With star catalogues in their present condition this accuracy seems hopeless. Since these declination errors are known to vary according to the declination itself, it follows that there will be a systematic error in all latitudes varying uniformly from south to north.

TABLE 14.—*Star program and positions, 1913.0*

No.	A. G. Lund.	Magnitude. Vis.	Magnitude. Ph.	Right Ascension.			Declination D_o.			Annual variation.	Sec. variation.	μ'	D (final).	D (Boss).	Cor. to Boss.	D (Lick).	Cor. to Lick.
				h	m	s	°	′	″	″	″	″	″	″	″	″	″
1	264	8.0	.....	0	36	29	39	7	35.486	+19.7823	−0.083	−0.010	35.46	.....	.....	.....	.....
2	392	7.9	.....	0	54	15	39	8	55.338	+19.4878	− .122	+ .001	55.37	.....	.....	.....	.....
3	430	7.8	.....	0	57	40	39	0	31.033	+19.3554	− .129	− .059	31.06	.....	.....	.....	.....
4	544	6.8	[1]6.5	1	12	19	39	1	18.276	+19.0611	− .162	+ .005	18.28	.....	.....	.....	.....
5	620	8.0	.....	1	22	13	39	12	14.540	+18.7027	− .185	− .067	14.59	.....	.....	14.18	+0.41
6	644	7.5	.....	1	25	59	39	2	45.566	+18.6112	− .193	− .040	45.61	.....	.....	.....	.....
7	733	6.8	.....	1	35	10	39	8	49.940	+18.3082	− .214	− .034	49.96	.....	.....	.....	.....
8	927	8.1	.....	1	55	34	39	12	17.807	+17.4860	− .261	− .065	17.83	.....	.....	17.26	+0.57
9	1237	8.0	.....	2	27	19	39	9	56.900	+16.0283	− .332	− .017	56.91	.....	.....	.....	.....
10	1255	6.3	.....	2	30	1	39	17	4.057	+15.8803	− .338	− .022	4.05	.....	.....	3.55	+0.50
11	1634	5.1	.....	3	5	40	39	16	54.797	+13.8226	− .414	+ .003	54.81	54.35	+0.46	54.68	+0.13
12	1697	6.3	.....	3	12	7	38	57	51.418	+13.3845	− .426	− .021	51.44	.....	.....	51.49	−0.05
13	2082	7.2	.....	3	58	15	39	16	18.935	+10.1025	− .509	− .052	18.95	.....	.....	18.97	−0.02
14	2133	6.9	.....	4	4	31	38	59	52.189	+ 9.6295	− .517	− .050	52.20	.....	.....	51.75	+0.45
2a	2448	5.5	[1]6.5	4	54	19	39	15	49.650	+ 5.6695	− .577	+ .003	50.03	49.97	+0.06	49.65	+0.38
15	2943	4.7	.....	5	43	9	39	9	8.759	+ 1.4469	− .604	− .026	8.76	8.71	+0.05	8.92	−0.16
16	2961	4.0	.....	5	45	28	39	7	26.261	+ 1.2769	− .605	+ .006	26.26	26.18	+0.08	26.34	−0.08
17	3134	8.3	7.5	6	3	35	39	11	37.590	− 0.3389	− .607	− .026	37.59	.....	.....	37.44	+0.15
18	3311	7.5	7.4	6	22	30	39	9	53.298	− 2.0122	− .602	− .047	53.31	.....	.....	53.35	−0.04
19	3451	8.3	8.0	6	36	27	39	7	2.480	− 3.1805	− .596	− .006	2.50	.....	.....	.....	.....
20	3497	6.6	6.9	6	39	59	39	3	38.034	− 3.5039	− .593	− .024	38.04	.....	.....	37.28	+0.76
2b	3568	6.3	7.2	6	47	2	38	58	25.250	− 4.0806	− .589	+ .005	25.92	25.97	−0.05	25.25	+0.67
3a	3773	6.6	7.6	7	11	46	39	1	55.410	− 6.1996	− .567	− .024	55.67	.....	.....	55.41	+0.26
21	3805	6.4	7.6	7	16	27	39	9	40.075	− 6.5931	− .563	− .043	40.12	.....	.....	40.12	0.00
22	3879	6.4	6.3	7	26	2	39	4	47.857	− 7.3720	− .551	− .023	47.89	.....	.....	47.46	+0.43
23	3927	7.0	7.2	7	31	55	39	4	25.277	− 7.8468	− .544	− .021	25.26	.....	.....	24.84	+0.42
3b	4137	6.9	6.9	8	5	36	38	59	25.950	−10.5161	− .493	− .072	26.32	.....	.....	25.95	+0.37
24	4175	7.8	7.8	8	12	10	39	4	12.975	−10.9669	− .482	− .037	13.02	.....	.....	12.26	+0.76
25	4248	7.8	7.5	8	23	30	39	9	45.560	−11.7645	− .463	− .017	45.62	.....	.....	45.84	−0.22
26	4334	8.1	8.1	8	37	34	39	7	13.733	−12.7128	− .436	+ .008	13.75	.....	.....	.....	.....
27	4417	7.0	8.0	8	50	47	39	8	44.542	−13.6531	− .410	− .060	44.59	.....	.....	.....	.....
28	4462	6.8	8.0	8	58	14	39	5	11.728	−14.1047	− .394	− .040	11.77	.....	.....	.....	.....
3c	4538	6.2	6.7	9	9	29	38	58	3.030	−14.6791	− .370	+ .070	3.54	.....	.....	3.03	+0.51
29	5305	7.3	7.2	11	50	52	39	14	29.978	−20.0718	− .010	− .042	29.93	.....	.....	.....	.....
30	5361	7.3	.....	12	5	4	39	7	2.663	−20.1168	+ .018	− .076	2.65	.....	.....	.....	.....
31	5389	7.3	.....	12	11	8	39	8	35.850	−20.0502	+ .030	− .028	35.85	.....	.....	.....	.....
32	5493	7.2	.....	12	33	26	39	9	53.001	−19.9288	+ .070	− .096	53.01	.....	.....	.....	.....
33	5658	6.5	.....	13	5	42	38	59	49.508	−19.2318	+ .121	− .004	49.50	49.59	−0.09	.....	.....
34	5808	6.4	.....	13	30	31	39	14	3.203	−18.4864	+ .157	+ .016	3.12	.....	.....	.....	.....
4a	6078	6.4	.....	14	16	13	39	11	36.020	−16.6290	+ .208	− .021	36.47	36.02	+0.45	.....	.....
35	6344	7.0	[1]9.0	15	9	56	38	59	25.954	−13.5447	+ .250	+ .002	25.92	.....	.....	25.92	0.00
36	6426	6.2	.....	15	25	17	39	1	25.288	−12.5396	+ .259	− .012	25.30	.....	.....	24.85	+0.45
37	6466	5.6	[1]6.9	15	32	3	39	17	54.809	−12.0660	+ .261	− .006	54.79	54.22	+0.57	54.59	+0.20
38	6651	6.5	.....	16	9	3	39	16	42.984	− 9.3624	+ .276	− .033	42.96	.....	.....	42.61	+0.35
39	6753	7.2	.....	16	24	0	39	2	13.575	− 8.1649	+ .281	− .012	13.56	.....	.....	13.33	+0.23

[1] Authority, Prof. E. C. Pickering.

TABLE 14.—*Star program and positions, 1913.0*—Continued.

No.	A. G. Lund.	Magnitude. Vis.	Magnitude. Ph.	Right Ascension.	Declination D_0.	Annual variation.	Sec. variation.	μ'	D (final).	D (Boss).	Cor. to Boss.	D (Lick).	Cor. to Lick.
				h m s	° ′ ″	″	″	″	″	″	″	″	″
40	6862	3.1	.....	16 39 55	39 5 13.691	− 6.9583	+ .285	− .095	13.69	13.31	+0.38	13.30	+0.39
41	6974	6.8	.....	16 57 10	39 13 33.365	− 5.3163	+ .286	+ .111	33.36	.....	.....	33.39	−0.03
42	7053	6.5	.....	17 10 32	39 5 10.040	− 4.3142	+ .288	− .021	10.03	.....	.....	10.01	+0.02
6a	7481	7.5	.....	18 2 57	38 59 21.870	+ 0.2435	+ .290	− .014	21.54	.....	.....	21.87	−0.33
43	7537	7.3	.....	18 8 20	39 4 47.447	+ 0.7307	+ .289	+ .002	47.41	.....	.....	46.81	+0.60
44	7607	7.3	[1]9.2	18 16 6	39 13 47.570	+ 1.4016	+ .288	− .006	47.59	.....	.....	47.49	+0.10
45	7646	8.0	[1]9.2	18 19 47	39 12 49.468	+ 1.7297	+ .288	+ .001	49.46	.....	.....	49.24	+0.22
46	7856	6.5	.....	18 40 23	39 12 44.401	+ 3.5033	+ .286	− .010	44.39	.....	.....	43.81	+0.58
47	7942	6.9	.....	18 47 45	39 14 13.128	+ 4.1410	+ .284	− .006	13.13	.....	.....	12.81	+0.32
48	8053	6.3	[1]6.1	18 56 17	39 5 47.529	+ 4.8769	+ .283	+ .004	47.52	.....	.....	47.20	+0.32
49	8236	4.8	.....	19 10 48	38 59 44.500	+ 6.0913	+ .281	− .003	44.46	44.30	+0.16	44.36	+0.10
50	8312	7.7	.....	19 16 0	39 6 22.587	+ 6.5077	+ .279	− .019	23.58	.....	.....	23.54	+0.04
51	9275	6.4	.....	20 17 6	39 7 41.740	+11.2604	+ .257	− .020	41.70	41.83	−0.13	.....	.....
52	9388	6.5	.....	20 23 33	39 12 33.090	+11.7510	+ .254	.000	33.09	.....	.....	32.76	+0.33
53	9391	8.1	.....	20 23 35	39 10 31.600	+11.7396	+ .254	− .014	31.59	.....	.....	.....	.....
54	9724	7.5	.....	20 48 57	39 10 22.363	+13.4726	+ .239	− .002	22.35	.....	.....	22.01	+0.34
55	9840	6.8	.....	20 59 1	39 9 55.720	+14.1072	+ .232	− .006	55.71	54.98	+0.73	55.29	+0.42
56	10031	4.8	.....	21 14 0	39 1 46.394	+15.0072	+ .222	− .006	46.38	46.07	+0.31	46.31	+0.07
57	10258	7.0	.....	21 36 21	39 7 13.078	+16.2394	+ .202	+ .004	13.05	.....	.....	13.10	−0.05
58	10364	6.6	[1]6.1	21 47 29	39 7 43.843	+16.7941	+ .191	+ .007	43.80	.....	.....	43.61	+0.19
59	10442	7.0	.....	21 57 13	39 6 26.856	+17.2245	+ .180	− .013	26.84	.....	.....	26.45	+0.39
60	10564	5.1	.....	22 10 8	39 16 58.747	+17.7916	+ .166	+ .005	58.76	58.36	+0.40	57.90	+0.86
7a	10649	7.7	.....	22 20 48	38 59 14.100	+18.2050	+ .152	+ .080	14.90	.....	.....	14.10	+0.80
61	10759	6.7	.....	22 32 0	39 10 30.398	+18.5750	+ .138	− .011	39.39	38.60	+0.79	.....	.....
62	10759	5.9	.....	22 32 0	39 11 1.689	+18.5711	+ .138	− .015	1.71	0.84	+0.87	.....	.....
63	10860	6.3	.....	22 40 9	39 0 33.527	+18.8275	+ .127	− .014	33.50	33.73	−0.23	32.86	+0.64
7b	11071	6.8	.....	23 5 47	38 59 49.720	+19.4781	+ .127	− .010	50.52	.....	.....	49.72	+0.80
	Mean...	.....	.....	.....	.....	.....	.....	.....	.....	.....	+0.28		+0.29

[1] Authority, Prof. E. C. Pickering.

The following table contains the pairs chosen, with their designation, their zenith distance, and size of image. So far as practicable, the pairs were chosen from among the available stars so as to make the mean algebraic zenith distance of each small. Reasons for the choice of the pair as the unit of latitude are given on page 81. The diameters of the images were obtained from measurement of the plates and are only approximate, as they vary with conditions. Stars 35, 44, and 45 are too faint to give images of measurable diameter. In the case of five very bright stars a screen was used over the objective, reducing the diameters one-half.

TABLE 15.—*Photographic pairs, zenith distance, size of image.*

Group.	Pair.	Star No.	z. (1913.0)	Diameter of image.	Group.	Pair.	Star No.	z. (1913.0)	Diameter of image.	Group.	Pair.	Star No.	z. (1913.0)	Diameter of image.	Group.	Pair.	Star No.	z. (1913.0)	Diameter of image.
			° ′	mm.				′	mm.				′	mm.				′	mm.
I....	A	1	+ 0.6	0.061	II....	D	17	−3.4	0.037	IV....	C	33	+8.4	0.101	VI....	D	47	−6.0	0.062
		2	− 0.7	.033			20	+4.6	.048			34	−5.8	.097			49	+8.5	[1].102
	B	3	+ 7.7	.045		E	18	−1.7	.064	V.....	A	35	+8.8	.....	VII...	A	51	+0.5	.090
		10	− 8.9	.084			19	+1.2	.037			37	−9.7	.100			53	−2.3	.057
	C	4	+ 6.9	.088	III...	A	21	−1.4	.065		B	36	+6.8	.095		B	52	−4.3	.065
		5	− 4.0	.050			22	+3.4	.102			38	−8.5	.070			56	+6.4	[1].088
	D	6	+ 5.5	.068		B	23	+3.8	.055		C	39	+6.0	.077		C	54	−2.2	.061
		8	− 4.1	.034			25	−1.5	.042			41	−5.3	.082			57	+1.0	.076
	E	7	− 0.6	.054		C	24	+4.0	.023		D	40	+3.0	[1].116		D	55	−1.7	.067
		9	− 1.7	.051			26	+1.0	.080			42	+3.0	.076			58	+0.5	.095
II...	A	11	− 8.7	.130		D	27	−0.5	.046	VI....	A	43	+3.4	.085		E	59	+1.8	.052
		12	+10.3	.100			28	+3.0	.067			44	−5.6	.....			61	−2.4	.107
	B	13	− 8.1	.066	IV....	A	29	−6.3	.070		B	45	−4.6	.....			62	−2.8	.123
		14	+ 8.3	.085			30	+1.2	.088			48	+2.4	.106		F	60	−8.8	.119
	C	15	− 1.0	[1].078		B	31	−0.4	.074		C	46	−4.5	.058			63	+7.7	.070
		16	+ 0.8	[1].088			32	−1.7	.066			50	+1.8	.062					

[1] Screened.

RESULTS OF OBSERVATIONS, PHOTOGRAPHIC.

In the following table are collected the individual latitudes resulting from the measures of each star, computed according to the method outlined at length in the preceding pages. The results from the scale stars are given separately in Table 17. In forming the means from these individual values, stars 61 and 62 have been given half weight, since they are the components of a double star (8 Lacertæ). The Besselian day numbers of the American Ephemeris were used in reducing to apparent place.

TABLE 16.—*Individual latitudes, photographic.*

GROUP I.

(ϕ=39° 8′ 10″+)

Star	1	2	3	4	5	6	7	8	9	10
	″	″	″	″	″	″	″	″	″	″
1911—Oct. 18	3.33	.....	.....	3.51	3.63	3.55	3.34	3.35	.....	.....
23	3.15	.....	.....	3.17	.....	3.49	3.58	.....	.....	.....
25	3.24	3.03	.....	3.26	2.90	3.54	3.50	3.45	.....	3.36
29	3.69	.....	3.36	3.33	3.51	.....	3.19	3.25	3.36	3.72
Nov. 2	3.22	3.60	3.01	3.62	.....	3.06	.....	.....	.....	.....
3	3.51	3.48	3.76	3.01	3.70	3.06	3.30	3.69	3.50	3.04
7	3.21	3.34	3.37	3.22	3.32	3.44	3.25	3.50	3.63	3.15
10	3.34	3.57	3.30	3.26	3.47	3.37	3.40	3.45	3.37	3.34
16	3.19	2.79	2.78	3.13	.....	3.58	3.29	2.91	3.27	2.72
19	3.10	3.52	3.98	3.08	3.78	3.50	3.36	3.56	3.25	3.44
22	3.66	3.32	3.31	3.53	3.68	3.26	3.36	3.28	3.53	3.50
26	3.29	3.39	3.34	3.26	3.49	3.89	3.52	3.39	3.12	3.42
30	3.70	3.36	3.45	3.57	3.04	3.44	3.55	3.62	2.99	3.08
Dec. 4	3.35	3.28	3.53	3.42	3.62	3.33	3.48	3.51	3.58	3.21
5	3.28	3.40	3.67	3.46	3.26	3.55	3.41	3.34	3.17	3.14
6	3.23	3.40	3.36	3.59	3.06	3.65	3.07	3.09	3.14	3.11
7	3.44	2.99	3.60	3.64	2.70	3.91	3.22	2.55	2.94	3.03
8	3.05	3.08	3.29	3.00	3.17	2.97	3.23	.....	.....	.....
19	3.54	3.38	3.51	3.19	3.02	3.43	3.39	3.13	3.49	2.95
28	3.20	3.37	3.71	3.08	3.39	4.10	3.43	3.14	3.09	3.02
1912—Jan. 7	2.71	.....	.....	3.06	.....	3.77	.....	.....	.....	3.37
Sept. 6	3.58	3.53	3.22	3.20	2.96	3.06	3.34	3.55	.....	3.42
8	3.19	2.95	.....	.....	.....	.....	.....	.....	.....	.....
9	.....	.....	2.89	3.18	3.28	3.09	.....	3.54	.....	3.55
10	3.34	3.24	2.99	3.14	3.45	3.13	3.40	3.44	3.13	3.36
12	3.49	3.59	.....	.....	.....	.....	.....	.....	.....	.....
20	.....	.....	3.18	3.21	3.78	3.25	3.72	3.69	3.87	3.82
30	.....	3.43	3.91	4.11	3.40	3.77	3.38	3.20	3.75	3.09
Oct. 1	3.64	3.74	4.23	4.17	3.52	3.87	3.22	3.39	3.03	3.14
2	3.72	3.56	3.97	4.04	3.37	3.90	3.67	3.44	3.59	2.88
4	3.62	3.28	3.29	3.50	3.53	3.17	3.47	3.76	3.55	3.45
5	3.44	3.53	3.40	3.48	3.42	3.42	3.46	3.63	3.48	4.12
6	4.01	3.41	3.28	3.36	3.51	3.29	3.56	3.57	3.69	3.53
7	3.51	3.62	4.31	3.82	3.55	4.18	3.13	2.93	3.12	3.37
15	3.37	3.46	3.72	3.40	3.51	3.97	3.48	3.14	3.45	2.99
16	3.44	3.09	3.83	3.74	3.28	3.86	3.43	3.20	3.33	3.12
20	3.82	3.55	3.57	3.73	3.68	3.47	3.59	3.65	3.75	3.83
26	3.47	3.37	3.36	3.79	3.47	3.58	3.47	3.36	3.65	3.65
27	3.59	3.64	3.58	3.63	3.63	3.52	3.60	3.60	3.80	3.61
29	3.52	3.56	3.17	3.28	3.53	3.35	3.75	3.45	3.46	3.27
30	3.44	3.33	3.40	3.60	3.69	3.75	3.63	3.40	3.35	3.38
Nov. 3	3.59	3.65	3.60	3.67	3.71	3.80	3.86	3.63	3.68	3.32
10	3.86	3.56	3.79	3.74	3.55	3.74	3.80	3.68	3.48	3.57
11	3.51	3.57	3.58	3.40	3.47	3.45	3.37	3.39	3.47	3.45
14	3.67	3.34	3.89	3.77	3.23	3.50	3.35	3.22	3.62	3.48
16	3.72	3.76	3.93	3.38	3.51	3.80	3.65	3.36	3.55	3.06
18	3.52	3.48	3.76	3.25	3.39	3.91	3.58	3.64	2.99	3.35
19	3.73	3.60	.....	3.35	3.41	3.45	3.44	3.93	3.46	.....
20	3.52	3.33	3.57	3.64	3.48	3.65	3.71	3.59	3.62	3.70
22	3.33	3.45	3.98	3.46	3.60	3.88	3.57	3.65	3.71	3.68
25	3.43	3.53	.....	3.47	4.05	3.26	.....	3.59	.....	.....
26	3.23	3.25	3.54	3.45	3.44	4.07	3.57	3.32	3.99	3.65
30	3.61	3.78	3.45	3.70	3.81	3.36	3.39	3.57	3.44	3.63
Dec. 3	3.58	3.59	3.57	3.75	3.38	3.03	3.57	3.53	3.34	3.56
6	.....	.....	.....	3.41	3.27	3.37	3.61	3.37	3.50	.....
9	3.78	3.62	3.51	3.58	3.40	3.80	3.53	3.55	3.60	3.81
12	3.72	3.85	3.41	3.60	3.40	3.46	3.24	3.92	3.83	3.50
13	.....	.....	3.48	3.32	3.34	3.38	3.48	3.26	3.43	3.47
14	3.71	3.33	3.56	3.63	3.53	3.71	3.55	3.62	3.29	3.51
15	3.61	3.55	3.26	3.40	3.54	.....	3.47	.....	3.43	3.66
20	3.50	3.63	3.75	3.52	3.57	3.67	3.17	3.60	3.60	3.42
21	3.56	3.51	3.33	3.29	3.44	3.44	3.52	3.28	3.83	3.35
22	3.50	3.41	3.57	3.41	3.36	3.64	3.55	3.46	3.47	3.64
24	3.21	3.63	.....	3.36	3.45	.....	.....	.....	.....	.....
28	3.51	3.75	3.32	3.54	3.36	3.35	.....	3.31	.....	3.38
1913—Jan. 4	3.38	3.20	.....	3.29	3.13	3.33	.....	3.12	.....	.....
Sept. 4	3.18	3.01	2.91	3.00	3.16	3.14	.....	3.38	.....	3.36
5	3.01	3.10	2.79	3.00	2.72	3.08	3.28	3.06	2.86	3.14
9	3.25	2.87	3.17	3.09	3.23	3.20	3.31	3.09	3.15	3.10
10	3.18	.....	.....	.....	.....	3.08	.....	2.90	.....	.....
22	3.11	3.16	2.97	3.13	2.96	2.88	3.18	3.15	3.18	3.34
23	3.13	3.06	3.22	3.23	3.11	3.00	3.12	3.20	3.14	3.08
24	.....	.....	3.19	3.09	3.20	3.05	3.25	3.36	3.04	3.20
25	3.25	3.09	3.00	2.93	3.11	3.14	2.86	2.93	3.05	3.15
27	3.05	2.98	3.20	.....	.....	3.08	3.12	.....	3.33	3.10
Oct. 3	3.31	3.31	3.10	3.22	3.18	3.03	2.92	3.31	3.08	3.13
4	3.30	3.17	3.01	3.20	3.26	3.01	3.11	3.15	3.05	3.32
13	3.28	3.28	3.25	3.24	3.35	3.32	3.12	3.12	3.23	3.22
14	3.13	3.20	3.27	3.30	3.28	3.19	3.26	3.34	3.12	3.28
16	3.38	2.94	3.19	3.16	3.36	.....	.....	.....	.....	3.26
22	3.33	3.09	3.07	2.96	3.26	3.17	3.23	3.42	3.30	3.18
26	3.26	3.54	3.03	3.26	3.10	3.06	3.21	3.17	3.26	3.24
Nov. 1	2.95	3.30	3.26	3.36	3.35	3.01	3.47	3.24	3.16	2.89
4	3.52	3.40	3.41	3.26	3.34	3.36	3.10	3.21	3.10	3.32
5	3.23	3.03	3.07	3.24	3.24	.....	3.17	.....	3.20	3.16
6	3.31	3.18	3.07	3.10	3.27	3.11	3.27	3.12	3.26	3.28
17	3.29	3.19	3.35	3.25	3.17	3.11	3.12	3.18	3.39	3.19
21	3.15	3.29	3.19	3.31	3.02	3.20	3.32	3.37	3.26	3.15
22	3.34	2.98	3.19	3.35	3.13	3.16	3.33	3.16	3.14	3.17

TABLE 16.—*Individual latitudes, photographic*—Continued.

GROUP I—Continued.

Star	1	2	3	4	5	6	7	8	9	10
	″	″	″	″	″	″	″	″	″	″
1913—Dec. 5	3.36	3.22	3.09	3.39	3.26	3.60	3.20	3.52	3.11	3.30
9	3.43	3.57	3.30	3.14	3.41	3.18	3.12	3.57	3.48	3.33
11	3.39	3.34	3.21	3.15	3.49	3.13	3.22	3.34	3.42	3.58
12	2.95	3.23	3.18	3.73	3.41	3.28	3.28	3.15	3.43	3.46
13	3.41	3.05	3.37	3.26	3.27	3.39	3.25	3.16	3.43	3.22
15	3.27	3.34	3.26	3.23	3.38	3.15	3.37	3.40	3.23	3.36
18	3.30	3.36	3.38	3.07	3.33	3.24	3.18	3.55	3.46	3.50
19	3.33	3.43	3.21	3.45	3.40	3.14	3.37	3.34	3.26	3.38
27	.....	.....	3.27	3.13	3.38	3.04	3.37	3.22	3.39	3.22
29	3.37	3.11	3.10	3.21	3.25	3.00	3.40	3.04	3.22	3.49
1914—Jan. 1	.....	.....	3.30	3.28	3.45	3.15	3.36	3.35	3.37	3.58
6	3.11	3.36	3.54	3.39	3.20	3.19	3.29	3.26	3.22	3.41
Sept. 5	3.18	3.09	3.14	3.08	2.87	2.96	3.61	3.07	3.30	3.29
7	3.29	2.98	2.93	3.19	3.10	3.10	.....	.....	.....	.....
9	2.89	3.22	3.20	3.25	3.47	2.80	2.98	3.08	3.20	3.41
13	3.13	3.09	3.00	3.21	2.91	2.97	2.91	3.17	2.95	3.04
14	3.09	3.09	2.85	3.00	3.15	2.98	3.00	3.35	3.21	3.40
19	3.12	.....	3.27	3.00	2.79	2.91	2.80	.....	2.95	2.96
20	3.31	2.90	3.09	3.06	3.16	2.99	2.86	3.17	3.07	2.87
21	3.12	.....	3.11	3.08	2.91	2.89	2.95	.....	3.04	3.20
22	3.14	2.94	3.11	3.03	2.67	3.06	3.22	2.93	3.31	3.02
26	2.93	2.77	2.67	3.00	2.66	3.09	3.28	.....	3.01	3.19
28	3.12	3.00	3.06	2.79	2.68	2.57	2.78	.....	2.86	2.75
29	3.19	3.07	3.05	3.06	2.53	3.26	3.09	2.95	2.88	2.90
30	3.14	2.87	2.87	3.16	.....	2.74	3.02	3.17	2.96	2.88
Oct. 1	3.31	2.85	2.92	3.13	2.96	3.01	3.12	3.06	3.10	3.48
2	3.22	3.05	3.09	3.32	2.59	2.53	3.09	2.95	3.01	3.02
5	3.17	2.88	2.92	2.94	3.11	2.93	3.14	3.04	3.10	3.28
12	.....	3.37	.....	3.11	3.06	3.01	2.97	3.21	.....	3.34
19	3.14	2.94	3.12	3.05	3.04	2.79	2.92	2.91	2.94	3.10
20	3.19	.....	.....	3.04	.....	3.00	.....	.....	.....	3.15
21	3.11	2.94	2.79	2.98	2.95	2.85	3.00	2.96	3.08	2.86
22	3.49	.....	.....	.....	.....	.....	.....	.....	.....	.....
23	2.89	3.30	3.09	2.97	3.26	3.00	2.95	2.79	3.02	3.12

GROUP II.

Star	11	12	13	14	15	16	17	18	19	20
	″	″	″	″	″	″	″	″	″	″
1911—Oct. 18	.....	.....	.....	.....	3.08	3.39	3.24	3.36	3.42	3.30
29	3.58	3.25	3.59	3.13	3.38	3.34	3.47	3.50	.....	3.10
Nov. 10	3.62	3.12	3.58	3.13	3.48	3.53	3.21	3.31	3.28	3.20
16	3.54	2.57	3.20	3.20	3.80	3.34	2.93	3.14	2.85	3.01
19	4.00	3.48	3.63	3.53	.....	.....	.....	.....	.....	.....
26	3.55	3.31	3.65	3.00	2.92	3.07	3.71	3.36	2.86	3.14
30	3.44	3.80	3.25	3.04	.....	.....	.....	.....	.....	.....
Dec. 5	3.71	3.15	3.26	3.42	3.72	3.32	3.13	3.05	3.43	3.67
6	3.39	3.19	3.38	3.03	2.98	3.06	2.98	3.08	3.39	3.45
7	3.10	3.40	2.92	3.53	3.42	3.37	3.02	3.17	3.54	3.72
19	3.49	3.15	3.46	3.56	2.95	3.50	3.62	3.05	3.46	3.44
28	3.58	3.83	3.06	3.56	3.80	3.15	.....	.....	.....	3.45
1912—Jan. 7	3.72	2.82	2.74	3.51	.....	.....	.....	.....	.....	.....
9	3.12	2.51	3.11	.....	3.54	3.20	3.27	.....	.....	3.42
13	3.22	3.17	3.09	2.96	3.12	3.56	.....	2.86	.....	3.19
16	3.32	2.92	2.94	3.14	2.97	2.88	3.03	2.73	.....	3.14
19	2.71	2.31	3.43	3.37	2.89	3.21	2.58	2.96	3.21	3.01
21	3.33	2.79	3.16	3.07	2.92	2.87	2.80	2.79	3.03	3.77
22	3.26	3.39	3.24	3.07	3.12	3.03	3.26	3.03	3.05	2.90
24	3.28	2.91	2.99	3.26	3.07	3.38	3.34	.....	3.45	2.99
27	3.17	3.13	3.24	2.85	3.10	2.66	3.36	3.29	2.99	2.78
Feb. 4	2.92	2.88	2.63	3.16	.....	2.97	3.30	3.00	2.78	2.73
5	.....	.....	.....	.....	2.86	3.09	3.25	3.61	2.72	2.64
6	2.93	2.96	3.32	3.26	2.60	3.25	3.05	3.42	3.40	3.31
8	.....	.....	.....	.....	3.20	2.78	.....	3.20	3.12	2.97
9	.....	.....	.....	.....	2.83	3.15	3.21	2.97	2.93	3.02
13	.....	.....	.....	.....	3.14	3.03	3.24	3.16	3.09	2.95
23	.....	.....	.....	.....	3.08	3.00	2.71	2.90	3.19	3.08
27	.....	.....	.....	.....	3.04	3.16	3.44	2.97	3.32	3.22
28	.....	.....	.....	.....	2.57	2.94	3.21	3.20	3.09	3.27
Mar. 7	.....	.....	.....	.....	.....	.....	2.96	2.95	2.93	3.10
10	.....	.....	.....	.....	.....	.....	2.85	2.91	3.32	3.35
Nov. 10	3.94	3.52	3.80	3.70	.....	.....	.....	.....	.....	.....
11	3.59	3.39	3.47	3.28	3.13	3.50	3.62	3.15	3.41	3.38
14	3.31	3.24	.....	.....	.....	.....	.....	.....	.....	.....
16	3.69	3.69	3.26	3.96	3.49	3.62	3.27	4.02	3.28	3.92
18	3.22	3.50	3.22	3.69	3.59	4.03	3.19	3.63	3.82	3.73
19	3.44	3.29	3.47	3.49	.....	.....	.....	.....	.....	.....
20	3.80	3.45	3.17	3.59	3.49	3.42	3.62	3.55	3.45	3.19
22	3.31	3.37	3.35	3.56	3.65	3.52	3.40	3.37	3.41	3.46
30	3.67	3.38	3.90	3.32	3.39	3.51	3.56	3.36	3.65	3.65
Dec. 3	3.34	3.64	3.40	3.71	3.50	3.52	3.74	.....	.....	3.20
9	3.29	3.52	3.53	3.68	3.88	3.70	3.77	3.58	3.30	3.83
12	3.27	3.66	3.55	3.88	3.92	3.79	4.15	3.63	2.88	3.68
13	3.40	3.34	3.62	3.57	3.67	3.69	3.84	3.67	3.49	3.64
14	3.48	3.62	3.60	3.53	3.49	3.51	.....	3.63	3.74	.....
15	3.58	3.62	3.06	3.43	3.47	3.22	3.42	.....	.....	3.81
20	3.45	3.48	3.80	3.66	3.18	3.64	3.55	3.79	3.68	3.57
21	3.55	3.18	3.72	3.53	3.29	3.62	3.71	3.55	3.67	3.37
28	3.43	3.55	3.44	3.49	3.42	3.65	3.68	3.38	3.38	3.68

TABLE 16.—*Individual latitudes, photographic*—Continued.

GROUP II—Continued.

Star	11	12	13	14	15	16	17	18	19	20
	"	"	"	"	"	"	"	"	"	"
1913—Jan. 4			3.51	3.44	3.41	3.40		3.63	3.45	
9	3.54	3.27	3.43	3.86	3.49	3.26		3.49	3.63	
13	3.82	3.69	3.47	3.42	3.53	3.57	3.32	3.81	3.68	3.29
14	3.67	3.36	3.47	3.65	3.55	3.70	3.94	3.53	3.55	3.71
15	3.60	3.55	3.37	3.68						
18							3.75			2.96
21	3.24	3.34	3.60	3.75	3.84	3.61	3.64	3.70	3.64	4.01
22	3.53	3.43	3.35	3.68	3.70	3.53				
25	3.29	3.46	3.33	3.66	3.37	3.40				
26	3.22	3.38	3.43	3.61	3.36	3.44				
30	3.46	3.42	3.22	3.15	3.56	3.43				
Feb. 1	3.26	3.47	3.92	3.40	3.77	3.27	3.47	3.31	3.97	3.70
2	3.26	3.47	3.33	3.58						
4	3.25	3.45	3.38	3.28	3.45	3.25	3.23	3.42	3.53	3.36
5	3.52	3.42			3.28	3.75				
6	3.44	3.55	3.22	3.28	3.44	3.36	3.36	3.24	3.55	3.26
7					3.90	3.13	3.12	2.94	3.75	3.39
8			3.06	3.37	3.17	3.07	3.27	3.09	3.11	3.08
12			3.36	3.56	3.30	3.27	3.31	3.28	3.19	3.33
13							3.60	3.56	3.14	3.32
14					3.09	3.13	3.48	3.43	3.46	3.05
18					3.24	3.10	3.44	3.44	3.58	3.38
23					3.34	3.51	3.02	3.03	3.16	3.29
25					3.57	3.46	3.84	3.18	3.36	3.02
28					3.51	3.39	3.78	3.37	3.25	3.35
Mar. 2					3.75	3.48	3.47	3.12	3.42	3.49
5					3.65	3.33	3.65			3.48
7					3.09	2.76	3.41	2.95	3.56	3.29
12							3.10			3.28
Oct. 3	3.29	3.14	3.22	3.02						
4	3.24	3.15	3.18	3.18						
13	3.18	3.32	3.40	3.18						
14	3.35	3.30	3.39	3.31						
22	3.18	3.26	3.21	3.12						
26	3.29	3.15	3.17	3.23						
Nov. 1	3.17	3.26	2.89	3.11	3.61	3.28	3.21	3.36	3.36	3.25
4	3.49	3.36	3.26	3.11	3.18	3.26	3.00	3.35	3.28	3.12
6	3.30	3.28	3.21	3.35	3.15	3.23	3.08	3.07	3.29	3.08
17	3.17	3.46	3.15	3.28	3.23	3.39	3.32	3.03	3.15	3.32
21	3.32	3.42	3.27	2.96	3.16	3.24	3.35	3.22	3.27	3.35
22	3.17	3.37	3.18	3.24	3.23	3.29	3.43	3.14	3.19	3.22
Dec. 5	3.38	3.30	3.48	3.15	3.18	3.13	3.12	3.52	3.24	3.23
9	3.43	3.34	3.57	3.38	3.34	3.25	3.07	3.36	3.26	2.98
11	3.51	3.45	3.49	3.35	3.17	3.18	3.12	3.09	3.41	3.23
13	3.45	3.24	3.26	3.42	3.30	3.41		3.14	3.12	
15	3.27	3.51	3.57	3.23	3.19	3.26	3.21	3.01	3.38	3.32
18	3.20	3.39			3.43	3.38	3.61	3.51	3.66	3.62
19	3.40	3.36	3.53	3.13	3.28	3.22	3.47	3.14	3.23	3.13
22	3.35	3.56								
27	3.54	2.89			3.26	3.02	3.36	3.24	3.28	2.95
29	3.37	3.12	3.31	3.46	3.37	3.27	3.38	3.46	3.28	3.49
1914—Jan. 6	3.41	3.39	3.54	3.41	3.27	3.48				
11	3.14	3.52	3.40	3.32			3.11	3.02	3.21	3.00
14	2.95	3.22								
18	3.37	3.21			3.13	3.23				
25			3.50	3.41	3.53	3.23				
26	3.28	3.52	3.20	3.35	3.20	3.26				
29	3.67	3.25	3.16	3.25	3.47	3.30	3.24	3.65	3.31	3.38
Feb. 1	3.42	3.34	3.64	3.66	3.60	3.43	3.47	3.71	3.41	3.30
2	3.64	3.44	3.30	3.54	3.43	3.34	3.66	3.26	3.46	3.38
7			3.43	3.42	3.12	3.13	3.08	3.20	3.51	3.44
8			3.64	3.38	3.54	3.43	3.61	3.11	3.44	3.64
9			3.39	3.14	3.30	3.39	3.09	3.24	3.10	3.30
11			3.29	3.22	3.29	3.30	3.52	3.13	3.45	3.25
15					3.57	3.30	3.29	3.17	3.24	3.21
16					3.33	3.42	3.50	3.46	3.32	3.40
17					3.37	3.34	3.31	3.22	3.78	3.55
21					3.52	3.42	3.37	3.34	3.42	3.17
26					3.39	3.51	3.34	3.28	3.51	3.42
Mar. 3					3.46	3.40	3.65	3.27	3.50	
8					3.30	3.33	3.27	3.26	3.59	3.40
10							3.24	3.17		3.30
12							3.43	3.11	3.54	3.31
13								3.35	3.51	3.45
15								3.28	3.37	3.40

GROUP III.

Star	21	22	23	24	25	26	27	28
	"	"	"	"	"	"	"	"
1911—Nov. 16	3.25	2.95	3.00		3.43	3.07	3.17	
26	3.48	2.99	3.09	3.13	3.43	3.54	3.32	2.95
Dec. 7	3.38	3.35	3.39	3.31	3.23	3.10	2.98	3.47
19	3.42	3.40	3.74					
1912—Jan. 9	3.18	2.96	2.96	3.44	3.15			2.90
13	2.94	3.15	3.60					
16	2.86	3.30	3.90					3.23

TABLE 16.—*Individual latitudes, photographic*—Continued.

GROUP III—Continued.

Star	21	22	23	24	25	26	27	28
	″	″	″	″	″	″	″	″
1912—Jan. 19	3.16	3.37	3.62	3.40	3.25	3.31	3.08	3.32
21	2.91	3.35	3.35	3.32	3.22	3.60	3.03	3.23
22	2.88	3.25	3.53	3.17	3.06	.....	.....	3.13
24	3.15	3.19	3.38	.....	3.17	.....	.....	3.47
27	2.54	2.95	2.56	.....	2.71	2.94	.....	3.45
Feb. 4	3.15	3.12	2.77	2.87	2.77	2.83	3.55	3.24
5	3.11	2.60	3.07	2.70	2.96	.....	2.87	2.81
6	2.85	3.00	3.46	.....	3.03	3.36	3.01	3.30
8	3.21	3.53	3.48	.....	3.09	3.27	2.94	3.04
9	2.36	2.90	3.26	.....	3.09	.....	.....	.....
13	3.00	2.85	3.46	.....	3.09	3.22	2.72	3.35
23	2.96	3.16	3.01	.....	2.99	.....	3.54	2.91
27	2.90	3.38	3.32	2.90	2.92	3.08	2.91	2.93
28	3.01	3.21	3.47	3.54	3.17	3.45	3.14	3.33
Mar. 7	2.92	3.19	3.34	3.06	2.78	2.91	2.69	3.17
10	3.00	3.04	3.12	2.77	2.80	2.75	3.07	2.77
13	3.02	2.84	3.16	.....	3.02	.....	.....	.....
16	2.64	2.93	3.19	3.21	3.03	3.01	2.77	3.04
17	3.10	2.98	3.44	2.73	2.97	2.67	3.13	3.20
22	2.93	2.98	2.88	3.09	3.50	2.80	3.59	3.23
25	.....	.....	3.60	3.75	2.88	3.09	3.08	3.22
26	2.92	2.86	2.94	2.91	2.52	2.93	2.78	2.77
31	.....	.....	3.11	3.21	2.95	2.90	2.85	2.85
Apr. 3	.....	.....	.....	.....	.....	3.02	3.02	3.05
Nov. 30	4.01	3.37	3.49	3.72	3.48	3.00	3.17	3.54
Dec. 9	3.63	3.74	3.38	3.70	3.81	3.72	3.34	3.45
12	3.85	4.02	3.64	3.38	3.55	3.45	4.04	3.83
21	3.95	4.08	.....	.....	.....	.....	.....	.....
28	3.41	3.49	3.67	3.61	3.58	3.49	3.61	3.54
1913—Jan. 4	3.60	.....	.....	.....	.....	.....	.....	.....
13	3.43	3.38	3.88	3.03	3.38	3.76	3.58	.....
14	3.80	3.66	3.55	3.51	3.69	3.47	.....	3.62
18	2.97	3.10	3.45	3.73	3.26	3.60	3.27	3.40
21	3.29	3.47	3.54	2.92	3.25	3.05	3.31	3.68
22	.....	.....	3.73	.....	3.06	.....	.....	.....
Feb. 1	3.45	3.52	3.48	3.19	3.35	3.87	3.05	3.63
4	3.35	3.54	3.43	3.52	3.10	3.86	3.55	3.82
6	3.32	3.46	3.42	3.37	3.43	3.46	3.25	2.89
7	3.27	3.35	.....	.....	.....	.....	.....	.....
8	3.68	3.47	3.51	3.43	3.29	3.29	3.39	3.35
12	3.32	3.30	3.22	3.51	3.64	3.34	3.50	3.34
13	3.31	3.40	3.42	3.44	3.33	3.53	3.49	3.26
14	3.14	3.47	3.54	3.40	3.55	3.46	3.29	3.35
18	3.44	3.30	3.34	3.26	3.36	3.42	3.30	3.47
23	3.08	3.61	.....	.....	.....	.....	.....	.....
25	3.31	3.33	3.30	.....	3.39	.....	3.39	3.54
28	3.36	3.41	3.28	3.33	2.92	3.52	3.28	3.38
Mar. 2	.....	.....	3.43	3.21	3.21	3.10	2.99	3.38
5	3.23	3.33	3.40	3.22	3.28	3.31	3.07	3.20
6	3.71	3.05	3.38	.....	3.09	.....	.....	.....
7	3.43	3.25	3.65	.....	3.47	.....	.....	.....
12	3.27	3.24	.....	.....	.....	.....	.....	.....
17	3.18	3.27	3.44	3.30	3.21	3.43	3.31	3.02
18	3.23	3.12	3.07	3.09	3.24	2.99	3.19	3.57
20	3.21	3.27	3.37	3.49	3.15	3.32	3.27	3.37
22	3.16	3.30	3.42	3.43	3.09	3.29	3.35	3.38
31	.....	.....	3.22	3.40	3.04	2.96	2.79	3.17
Apr. 1	.....	.....	.....	3.36	.....	3.42	3.24	3.44
Dec. 5	3.18	3.15	3.25	3.17	3.32	3.16	3.49	3.03
9	3.47	2.92	.....	.....	.....	.....	.....	.....
11	3.35	3.17	3.16	3.21	3.42	3.11	3.36	3.03
13	3.26	2.99	3.12	2.86	3.35	3.06	3.09	3.24
15	3.17	3.17	3.43	3.27	3.47	3.32	3.21	3.31
18	3.10	3.22	3.00	3.28	3.08	3.21	3.68	3.04
19	3.15	3.28	3.35	.....	3.25	3.11	3.71	3.35
27	3.32	3.16	.....	.....	.....	.....	.....	.....
29	3.45	3.37	3.16	3.64	3.21	3.28	3.22	3.26
1914—Jan. 11	3.25	3.21	3.36	3.35	3.28	3.27	3.22	3.27
29	3.39	3.47	3.36	3.24	3.60	3.35	3.47	3.37
Feb. 1	3.17	3.19	3.13	2.88	.....	3.52	3.14	3.16
2	3.39	3.52	3.49	.....	3.39	3.27	.....	.....
8	3.20	3.38	3.40	3.32	3.33	3.47	3.30	3.27
9	3.28	3.37	3.39	.....	3.23	3.06	3.49	3.51
11	3.44	3.35	3.45	.....	3.32	.....	.....	.....
15	3.06	3.06	.....	.....	.....	.....	.....	.....
16	3.40	3.14	3.22	3.32	3.44	3.49	3.07	3.36
17	3.54	3.41	3.67	3.23	3.21	3.63	3.04	3.43
21	3.27	3.35	3.64	3.27	3.38	3.58	3.27	3.12
24	3.15	3.29	3.48	3.28	3.01	3.10	3.20	3.15
26	3.31	3.36	3.56	3.59	3.25	3.44	3.44	3.31
Mar. 8	3.41	3.32	3.50	3.05	3.31	3.52	3.30	3.36
10	3.22	.....	3.54	3.37	3.26	3.32	3.25	.....
12	3.52	3.43	3.48	.....	3.39	3.44	3.40	.....
13	3.33	3.39	3.38	3.35	3.29	3.26	3.31	3.36
14	.....	.....	.....	.....	3.45	.....	3.58	3.35
15	3.29	3.30	3.32	3.28	3.30	3.13	3.47	3.28
20	.....	.....	3.20	3.40	.....	3.07	3.49	3.19
22	3.36	3.16	3.11	3.15	3.20	.....	3.40	3.39
24	3.28	3.23	3.58	3.08	3.25	3.12	3.37	3.28
Apr. 3	.....	.....	.....	3.20	3.20	3.35	3.03	3.27
5	.....	.....	.....	3.23	2.98	3.47	3.36	3.41
9	.....	.....	.....	.....	3.48	3.40	3.43	3.47

TABLE 16.—*Individual latitudes, photographic*—Continued.

GROUP IV.

Star	29	30	31	32	33	34
	"	"	"	"	"	"
1912—Jan. 19	2.64	3.09	3.20	3.09	3.69	.....
21	3.29	3.21	3.19	3.27	.....	3.08
22	3.32	3.23	3.04	2.94	3.01	3.02
24	3.35	3.41	3.13	3.20	2.76	3.30
Feb. 4	3.19	3.34	2.88	.....	2.91	3.12
6	3.22	3.05	3.00	2.63	3.24	3.51
8	3.59	3.48	3.23	2.90	3.42	2.70
23	3.07	3.16	3.04	3.05	3.18	3.16
27	3.62	3.47	3.19	3.54	3.14	2.99
28	3.24	3.44	3.29	3.43	3.09	3.19
Mar. 10	3.23	3.35	3.12	3.01	3.14	3.36
13	3.34	3.45	3.37	3.03	3.25	3.07
16	3.01	3.07	3.02	3.05	2.95	3.00
17	2.81	3.28	3.33	3.15	3.27	2.75
22	.....	.....	.....	.....	3.98	2.65
25	2.79	3.43	2.98	2.61	2.86	2.47
30	3.43	3.12	3.44	3.14	2.85	3.36
Apr. 3	3.61	3.40	3.67	3.43	2.49	3.87
8	3.52	2.64	3.12	2.89	2.89	3.24
9	2.89	2.59	2.90	3.01	3.10	2.94
10	3.36	3.31	3.20	3.24	3.46	2.94
11	3.42	3.29	3.47	3.33	2.62	2.93
19	.....	3.59	3.17	3.21	2.85	3.20
23	3.60	3.22	3.37	3.14	2.49	2.93
27	3.36	3.42	3.36	3.25	3.07	3.19
May 1	3.28	3.06	2.91	3.09	3.04	3.27
2	.....	.....	.....	.....	2.93	3.28
3	3.19	3.08	.....	.....	3.00	3.24
4	3.13	3.22	3.07	3.06	3.35	3.27
9	.....	3.08	3.14	2.93	3.13	3.18
10	3.06	3.21	2.89	3.17	2.90	2.93
13	.....	.....	3.24	3.29	3.28	3.08
18	.....	.....	3.13	3.17	3.06	3.14
20	3.36	3.15	3.22	3.14	3.16	3.10
27	.....	.....	.....	.....	3.37	3.11
30	.....	.....	.....	.....	3.34	3.54
31	.....	.....	.....	.....	2.96	2.93
1913—Feb. 8	2.89	3.43	3.28	3.13	.....	.....
12	3.49	3.66	3.80	3.34	3.38	3.40
13	3.45	3.36	3.53	3.22	3.51	3.61
18	3.55	3.30	3.27	3.46	.....	.....
25	3.44	3.17	3.31	3.30	3.50	3.35
Mar. 2	3.19	3.44	3.30	3.27	3.31	3.34
5	.....	3.42	3.50	.....	.....	.....
6	.....	.....	3.15	3.97	2.95	3.32
11	3.03	3.01	3.16	3.02	3.62	3.42
17	3.67	3.32	3.42	3.27	3.27	3.24
18	3.34	3.40	3.27	3.46	3.20	3.49
20	3.58	3.30	3.39	3.24	3.30	3.58
22	3.11	3.38	3.05	3.43	3.16	3.33
27	3.31	3.22	3.30	3.53	3.41	3.52
28	3.46	3.16	3.19	3.20	.....	.....
31	3.17	3.15	3.00	3.42	3.33	3.39
Apr. 1	3.13	3.43	.....	.....	3.21	3.34
6	3.23	3.20	3.25	3.12	3.41	3.16
8	.....	.....	.....	.....	3.07	3.25
17	3.22	3.39	3.46	3.35	3.41	3.34
18	3.49	3.75	.....	.....	.....	.....
19	3.30	3.53	3.25	3.31	3.22	3.39
20	3.36	3.35	2.98	3.44	2.88	3.30
21	3.52	3.26	3.30	3.21	3.40	3.30
22	.....	.....	.....	.....	3.18	3.41
24	2.94	3.44	3.22	3.43	3.31	3.17
25	3.52	3.31	3.33	3.23	3.24	3.14
29	.....	.....	3.13	3.32	3.58	3.15
30	3.30	3.03	3.40	3.14	3.26	3.03
May 1	3.03	3.30	3.33	3.28	3.21	3.31
2	3.30	3.36	3.42	3.22	3.24	3.01
3	.....	3.18	3.50	3.26	3.42	3.32
8	.....	.....	3.09	3.26	3.22	3.20
10	3.35	3.06	3.29	3.42	3.10	2.97
11	.....	.....	.....	.....	3.21	3.23
19	.....	3.15	3.38	3.20	3.12	3.25
20	3.17	3.35	3.20	3.32	3.18	3.16
29	.....	.....	.....	.....	3.24	3.24
31	.....	.....	.....	.....	3.23	3.30
1914—Feb. 8	3.73	3.45	3.68	3.47	3.49	3.86
9	.....	.....	3.48	3.05	.....	.....
11	3.50	3.50	3.30	3.29	3.41	3.50
16	3.42	3.26	3.49	3.65	3.60	3.39
17	.....	.....	3.47	3.51	3.45	3.44
21	3.49	3.46	3.33	3.32	3.44	3.44
24	3.25	3.21	3.38	3.25	3.12	3.34
26	3.54	3.30	3.23	3.30	3.46	3.64
Mar. 8	3.46	3.46	3.27	3.21	3.44	3.40
12	3.57	3.19	3.27	3.42	3.12	3.44
13	3.79	3.45	3.58	3.33	3.30	3.44
14	3.30	3.46	.....	.....	.....	.....
15	3.23	3.47	3.46	3.09	3.58	3.45
20	3.13	3.09	3.14	2.90	3.12	3.97
24	3.42	3.38	3.32	3.51	3.40	3.44

TABLE 16.—*Individual latitudes, photographic*—Continued.

GROUP IV—Continued.

Star	29	30	31	32	33	34
	″	″	″	″	″	″
1914—Apr. 3	3.83	3.42	3.20	3.39	3.06	3.36
5	3.24	3.41	3.29	3.51	3.49	3.87
6	3.19	3.88	.....	3.36	3.46	3.55
9	3.43	3.46	3.64	3.64	3.60	3.89
10	3.43	.....	3.12	3.47	3.53	3.32
12	3.24	3.36	3.37	3.06	3.43	3.36
13	3.36	3.32	3.23	3.40	3.40	3.44
17	3.50	3.50	3.56	3.48	3.42	3.42
18	.....	.....	.....	.....	3.68	3.38
21	3.47	3.41	3.38	.....	3.18	3.40
23	3.42	3.46	3.03	3.41	3.44	3.55
27	3.38	3.43	3.28	3.34	3.42	3.48
28	3.48	3.26	3.22	3.34	.....	.....
May 2	.....	.....	.....	.....	3.61	.....
11	3.57	3.46	3.35	3.20	3.46	3.49
16	3.42	3.44	3.22	3.33	3.17	3.46
17	3.52	3.22	3.33	3.35	3.33	3.21
18	3.52	3.59	3.39	3.28	3.51	3.42
19	3.36	3.36	3.37	3.61	3.47	3.46
20	3.34	3.43	3.36	3.40	3.39	3.68
21	3.33	3.35	3.38	3.07	3.36	3.18
24	.....	.....	.....	.....	3.29	3.31
26	.....	.....	.....	3.26	3.31	3.42
30	.....	.....	.....	3.50	3.38	3.31
31	.....	.....	.....	.....	3.43	3.29
June 2	.....	.....	.....	.....	3.40	3.28

GROUP V.

Star	35	36	37	38	39	40	41	42
	″	″	″	″	″	″	″	″
1911—June 9	.....	3.60	2.79	3.33	.....	3.51	.....	3.24
15	.....	2.90	3.87	.....	.....	2.98	.....	2.86
18	.....	.....	.....	.....	.....	3.41	.....	3.39
20	.....	.....	.....	.....	.....	3.74	.....	3.60
21	.....	3.59	3.02	3.14	.....	.....	.....	.....
26	.....	3.72	2.57	3.15	.....	.....	.....	.....
27	.....	.....	.....	.....	3.26	3.38	3.43	3.30
28	.....	.....	.....	.....	.....	3.04	.....	3.43
29	.....	3.54	3.65	3.40	3.50	3.27	3.59	3.61
30	.....	3.63	3.69	3.46	3.35	3.42	3.43	3.38
July 1	.....	3.12	3.71	3.30	3.05	3.12	3.74	3.20
6	.....	3.29	3.24	.....	.....	.....	.....	.....
14	.....	.....	.....	.....	3.12	.....	3.70	.....
15	.....	.....	.....	.....	3.50	3.33	3.42	3.29
17	.....	.....	.....	.....	3.18	3.40	3.80	3.10
20	.....	.....	.....	.....	3.56	3.37	3.60	3.21
22	.....	.....	.....	.....	3.39	3.45	3.45	3.14
24	.....	.....	.....	.....	.....	3.50	.....	3.13
27	.....	.....	.....	.....	.....	3.69	.....	3.23
28	.....	.....	.....	.....	.....	3.39	.....	3.49
1912—Mar. 30	3.60	3.56	2.78	2.96	3.32	3.15	2.71	3.32
Apr. 3	3.55	3.20	3.24	3.22	3.02	2.82	3.59	3.47
9	.....	3.27	3.07	.....	.....	.....	.....	.....
10	.....	2.85	3.48	.....	3.13	3.43	3.00	3.50
11	2.72	3.06	3.23	3.33	3.79	3.51	3.05	3.53
19	.....	3.38	3.61	.....	.....	.....	.....	.....
23	.....	3.39	2.81	.....	.....	.....	.....	.....
27	3.16	3.09	3.60	3.13	2.45	3.17	3.17	3.55
May 1	2.85	3.11	3.43	3.34	.....	3.17	.....	2.94
2	3.29	3.23	3.35	3.41	3.05	3.24	3.39	3.14
3	3.03	2.85	3.40	3.53	2.96	3.23	3.17	3.14
4	3.29	3.34	3.42	2.96	3.63	3.18	2.97	3.42
9	2.76	3.17	3.30	3.52	3.10	3.32	3.19	3.07
10	3.44	3.10	3.64	3.46	3.45	3.51	2.90	3.44
18	3.06	3.17	3.16	3.17	2.99	3.11	3.08	3.08
20	.....	2.95	3.11	.....	3.28	3.14	3.44	3.10
26	3.27	3.66	3.52	3.44	3.58	3.43	2.85	3.16
27	2.90	3.05	3.49	3.37	3.23	2.91	2.87	3.20
30	3.15	3.34	3.14	3.13	3.21	2.91	2.77	3.08
31	2.86	.....	.....	3.19	3.40	3.19	3.16	3.36
June 1	2.38	2.95	3.33	3.40	2.97	3.19	3.42	2.94
8	3.13	2.96	3.28	3.27	3.17	3.31	2.85	3.56
9	3.25	3.07	3.01	2.98	.....	3.13	.....	2.98
10	3.11	.....	.....	3.31	3.44	3.55	3.01	3.47
13	.....	3.39	2.99	.....	.....	.....	.....	.....
20	3.34	3.29	3.30	3.38	3.36	3.39	3.04	3.59
July 2	3.28	3.18	2.90	3.22	3.14	3.10	3.23	3.04
3	3.30	3.11	2.99	3.19	3.16	3.15	3.53	3.18
5	3.65	3.51	2.95	3.21	3.31	3.18	3.39	3.08
7	.....	.....	.....	.....	.....	3.09	.....	3.32
8	.....	3.00	3.41	.....	3.06	3.20	3.25	3.15
26	.....	.....	.....	.....	.....	2.95	.....	3.25
27	.....	.....	.....	.....	.....	3.33	.....	2.66

TABLE 16.—*Individual latitudes, photographic*—Continued.

GROUP V—Continued.

Star	35	36	37	38	39	40	41	42
	"	"	"	"	"	"	"	"
1913—Apr. 5	.....	3.58	3.37	3.56	.....	3.47	.....	3.54
6	.....	2.83	3.66	.....	.....	.....	.....	.....
8	3.88	3.60	3.12	2.97	3.22	3.42	3.25	2.84
17	3.00	3.25	3.17	3.38	3.25	3.38	3.43	3.16
19	.....	.....	.....	.....	3.73	3.34	3.44	3.50
20	.....	3.22	3.31	.....	.....	.....	3.29	.....
21	3.36	3.26	3.15	3.51	3.54	3.40	3.38	3.12
22	3.23	3.33	3.24	3.15	3.30	.....	3.21	.....
24	.....	3.12	3.13	.....	2.89	3.26	2.97	3.34
25	.....	3.25	3.18	.....	2.91	3.11	3.06	3.28
29	3.38	3.34	3.22	3.35	.....	3.06	3.27	3.50
30	3.24	3.16	3.17	3.14	3.30	3.21	3.24	3.31
May 1	3.13	3.34	3.31	3.35	3.49	3.16	3.07	3.25
2	.....	3.30	3.19	.....	3.47	3.20	3.18	3.39
3	.....	.....	.....	.....	.....	3.28	3.63	3.25
8	3.05	3.14	3.32	3.25	3.24	3.09	2.86	3.26
10	3.03	3.18	3.64	3.11	3.05	2.97	3.70	3.41
11	.....	3.14	3.18	.....	.....	3.11	.....	3.25
19	.....	3.31	3.06	.....	.....	.....	.....	.....
20	3.14	2.99	3.13	3.27	.....	3.05	.....	3.51
24	2.88	3.05	3.24	3.09	3.13	3.22	3.15	3.23
31	.....	3.24	3.07	.....	3.38	3.24	3.27	3.34
June 2	3.32	3.04	3.12	3.06	2.86	2.94	3.23	3.03
5	3.10	3.11	2.87	3.08	3.43	3.06	3.08	3.31
6	.....	3.03	3.22	.....	2.89	3.08	2.96	3.14
9	3.22	3.12	3.10	3.10	3.14	3.13	3.00	3.24
13	.....	3.22	3.20	.....	3.57	3.09	3.16	2.87
15	3.19	3.11	3.12	3.01	.....	.....	.....	.....
17	3.42	3.82	3.14	3.24	.....	3.21	.....	3.20
18	3.25	3.06	3.00	3.18	2.96	3.19	3.03	3.02
28	.....	.....	3.21	.....	3.57	3.26	3.37	3.50
29	.....	2.87	2.92	.....	.....	3.02	.....	3.11
30	2.69	2.99	3.10	3.10	2.87	3.09	2.97	3.14
July 3	3.22	2.97	2.99	3.03	2.89	3.04	2.88	2.99
6	3.34	3.00	2.89	3.15	.....	.....	.....	.....
7	3.57	.....	.....	3.07	.....	3.02	.....	2.95
8	.....	.....	.....	.....	3.04	3.22	3.18	3.10
10	.....	3.15	3.22	.....	3.10	3.14	2.96	2.89
11	.....	3.03	3.28	.....	.....	.....	3.09	.....
13	.....	.....	.....	.....	3.22	3.13	3.04	3.52
16	.....	.....	.....	.....	2.88	.....	2.92	.....
21	.....	.....	.....	.....	3.07	3.11	3.21	3.11
25	.....	.....	.....	.....	3.47	3.16	2.97	3.17
26	.....	.....	.....	.....	2.92	3.22	3.13	3.12
1914—Apr. 3	.....	3.45	3.51	3.44	3.57	3.29	3.54	3.18
5	3.38	3.16	3.37	3.45	3.07	3.40	3.23	3.36
6	.....	3.40	3.51	3.32	.....	3.38	.....	.....
9	3.84	3.61	3.65	3.70	3.44	3.73	3.92	3.30
10	3.58	3.46	3.52	3.46	3.38	3.27	3.48	.....
12	3.63	3.30	3.33	3.40	.....	.....	.....	.....
13	3.47	3.33	3.46	3.42	3.42	3.34	3.44	3.40
17	3.77	3.30	3.36	3.48	3.46	3.38	3.43	3.42
18	.....	3.48	3.35	3.51	.....	3.38	3.30	3.57
21	3.39	.....	3.48	3.30	3.57	3.69	.....	.....
23	.....	.....	3.32	3.49	3.47	.....	.....	.....
27	3.33	3.52	3.41	3.48	3.40	3.38	3.17	3.33
May 15	.....	3.38	3.56	3.52	.....	3.29	.....	.....
16	3.66	3.33	3.18	3.34	3.35	3.41	.....	3.24
17	.....	3.48	3.15	3.30	3.41	3.44	3.32	3.43
18	3.44	3.42	3.44	3.39	3.63	3.32	.....	3.46
19	.....	3.10	3.13	3.20	.....	3.33	3.02	3.14
21	.....	3.29	3.11	3.18	.....	3.16	3.26	3.36
25	.....	.....	3.12	.....	.....	3.50	.....	.....
26	.....	3.27	3.12	3.20	.....	3.35	3.04	3.35
30	.....	3.23	3.25	3.22	3.08	3.26	3.34	3.49
31	3.21	3.25	3.31	3.34	3.26	3.32	3.28	3.43
June 2	.....	3.26	3.26	3.30	3.30	3.53	3.26	3.40
7	.....	3.28	3.23	3.09	.....	.....	3.24	.....
11	3.48	3.27	3.28	.....	.....	3.38	.....	.....
13	3.39	3.33	3.21	3.30	.....	3.26	.....	.....
15	.....	3.38	3.17	3.35	3.41	.....	.....	.....
16	3.26	3.18	3.47	3.24	3.22	3.13	3.34	3.10
17	3.49	3.35	3.17	3.23	3.39	3.38	3.15	3.40
19	3.00	3.09	3.32	3.31	3.69	3.19	3.19	3.61
20	.....	2.99	3.42	.....	.....	.....	.....	3.00
24	.....	3.29	3.24	3.15	.....	3.42	.....	.....
29	.....	3.13	3.29	3.22	.....	2.95	3.33	3.02
30	3.61	3.29	3.42	.....	.....	3.21	3.21	3.34
July 2	.....	3.41	3.22	3.28	3.18	3.21	.....	.....
3	3.11	2.95	3.24	3.23	3.05	3.16	.....	3.29
5	3.65	3.10	3.24	3.14	3.19	3.16	3.19	.....
11	.....	.....	.....	3.22	.....	3.28	.....	3.25
12	.....	.....	.....	3.36	3.23	3.16	3.33	3.29
15	.....	.....	.....	.....	3.28	3.29	3.12	2.95
17	.....	.....	.....	3.20	3.22	3.28	3.36	3.04
18	.....	.....	.....	3.21	.....	.....	.....	3.11
19	.....	.....	.....	2.90	3.10	2.87	3.08	3.36
20	.....	.....	.....	3.09	3.32	.....	3.10	3.30
21	.....	.....	.....	3.18	3.26	3.08	3.21	3.30

TABLE 16.—*Individual latitudes, photographic*—Continued.

GROUP VI.

Star	43	44	45	46	47	48	49	50
	"	"	"	"	"	"	"	"
1911—June 20				3.77	3.98		3.86	
21							3.74	
27				3.57	3.47	3.39	3.38	
28				3.68	3.80	3.42	3.57	3.39
29				3.36	3.51	3.32	3.62	3.43
30				3.76	3.58	3.37	3.51	3.45
July 1				3.94	3.67	3.38	3.11	3.27
6					3.33			
12							3.40	
14							3.32	
15				3.66	3.68	3.42	3.41	3.20
17				3.73	3.81	3.34	3.53	3.33
20				3.65	3.80	3.48	3.53	
22				3.45	3.51	3.16	3.53	
24				3.86		3.73	3.50	3.69
27				3.77	3.75	3.51	3.29	3.77
31				3.79	3.61	3.47	3.28	3.47
Aug. 7						3.45	3.27	
8						3.54	3.39	
9				3.67		3.35		
10				3.73	3.37	3.56	3.47	3.59
1912—May 2	3.22	3.15	2.81			3.23		
4	3.43	2.88	2.72	2.66	3.01	3.52	2.87	
9	3.29	3.56	3.34	3.19	3.28	3.36	2.88	3.19
10				3.20	3.21		3.00	3.03
18			3.20	3.15		3.28		3.37
20				3.20	3.16		3.23	3.09
26			3.01	2.70	3.16	3.54	3.37	3.42
27	3.26	3.24	3.10	3.08	3.23	3.23	3.05	3.15
30	2.79	3.46			3.39		2.65	
31	3.26		3.16	3.24	3.28	3.69	3.23	3.40
June 1	3.11	3.33	3.40	3.37	3.55	2.99	2.94	3.01
8				2.98	3.00		2.82	2.91
9				3.21	3.42		3.14	3.33
10	3.05	3.49	3.39	3.23	3.35	2.90	3.06	3.08
20	3.18	3.08	3.18	3.31	3.31	3.32	3.00	3.18
July 2	3.31	3.45	3.06	3.14	3.31	3.66	3.59	3.25
3	3.10	3.22	3.64	3.33	3.48	3.10	3.30	3.40
5	3.32	3.38	3.09	3.03	3.27	3.07	3.31	2.96
7	3.30	3.07		3.42	3.38		3.29	3.43
8	3.15	3.58	3.41	3.32	3.30	3.12	3.03	3.27
22				3.36	3.51		3.05	3.47
26	3.40	2.93	3.31		3.33	3.14	3.69	
27	3.81	3.23	2.97	2.96	3.30	3.71	3.86	3.65
Aug. 3					3.77		3.12	
4			3.68	3.40	3.39	3.45	3.39	3.12
12					3.65		2.49	
15					3.45		3.44	
29				3.47	3.27		2.82	3.22
Sept. 5				3.63	3.59		3.16	3.38
6				3.59	3.46		3.20	3.22
9				3.67	3.61		3.28	3.31
10				3.53	3.53		3.13	3.23
12				3.47	3.40		3.16	3.31
14					3.35		3.12	
1913—May 8	3.41			3.10	3.60	3.23	3.43	2.97
11	2.99	2.91	3.49	3.10	3.26	3.05	3.15	3.13
24	3.06	3.26	3.03	3.47	3.31	2.94	3.03	3.04
31	3.28	3.33	3.28	3.09	3.17	3.37	3.14	3.02
June 2				3.03	3.25	3.05	2.99	3.03
5	3.26	2.98	2.95	3.06	3.05	3.03	3.27	2.82
9	3.19	3.01	3.33	3.11	3.13	3.18	3.11	3.27
13				2.97	3.03		3.18	3.30
17				3.12	3.28		3.24	3.30
18	3.04	3.09	3.24	3.08	3.22	3.11	3.11	3.10
28				3.25				3.26
29	3.10	3.27	3.56	3.15	3.18	3.04	2.95	3.29
30	3.06	3.36	2.68	3.11	2.89	3.02	3.20	2.95
July 3	3.03	3.09	3.12	2.90	2.93	3.10	2.84	3.14
7	2.96	2.83		3.44	3.03		3.18	3.24
8					3.04		3.14	
10	3.26	2.98						
14	3.20	3.18			3.07		3.18	
16	3.04	3.14		2.94	3.07		3.07	2.99
18				3.32	3.25		3.18	3.08
21	3.08	2.98	3.03	3.14	2.95	3.00	3.04	2.89
22	3.00	2.99		3.08	3.20		3.19	3.03
25	3.17	3.18	3.13	3.28	3.09	3.31	3.13	3.12
26	3.06	3.00	2.98	2.97	3.06	3.26	3.04	3.25
Aug. 2	3.21	2.97	3.23	2.94	3.05	2.99	3.29	3.09
4			2.96	3.17	3.20	3.14	3.10	2.74
5	3.24	2.99	3.18	3.03	2.95	3.26	3.13	3.10
7	3.16	3.23	2.97	3.11	3.06	3.09	3.14	3.03
11	3.08	2.59		3.15	3.15		3.13	2.86
14				3.15	3.11	3.10	3.22	2.89
15	3.15	2.79	3.15	3.20	3.11	3.10	3.21	3.18
16	3.02	2.93	2.87	3.02	3.07	3.09	3.14	2.99
20	3.05	3.15	3.14	3.10	3.22	3.19	3.25	3.05
21	3.22	3.15	2.93	3.12	3.00	3.14	3.18	3.19
24				3.13				3.21
25	2.99	3.26	2.92	3.17	3.24	2.98	3.08	3.19
26	3.14	3.34	2.95	3.06	3.27	2.94	3.01	3.14

TABLE 16.—*Individual latitudes, photographic*—Continued.

GROUP VI.

Star	43	44	45	46	47	48	49	50
	"	"	"	"	"	"	"	"
1914—May 15	3.55	.....	.....	3.54	3.49	3.22	3.38	3.08
16	3.48	3.30	3.65	3.48	3.29	3.38	3.56	3.22
17	3.49	3.48	3.48	3.41	3.22	3.20	3.33	3.40
18	3.30	3.10	3.18	3.48	3.35	3.44	3.35	3.34
19	3.36	.....	.....	3.13	3.04	3.22	3.45	3.63
21	3.72	.....	.....	3.21	3.11	3.32	3.20	3.19
25	3.39	.....	.....	.....	3.63	3.38	3.57	3.31
26	3.47	3.31	3.19	3.36	3.13	3.44	3.45	3.43
30	3.22	3.26	3.41	3.39	3.43	3.34	3.34	3.23
31	3.30	3.21	3.46	3.22	3.23	3.21	3.32	3.48
June 2	3.35	3.44	3.28	3.10	3.22	3.36	3.33	3.23
7	3.42	.....	3.42	3.13	3.26	3.29	3.50	3.33
16	3.54	3.42	.....	.....	3.29	3.21	3.21	3.34
17	3.25	3.20	.....	3.15	3.25	3.17	3.34	3.19
19	3.31	3.41	3.18	3.16	3.30	3.24	3.24	3.20
29	3.41	3.00	.....	3.13	.....	3.42	3.45	3.33
30	3.26	3.11	3.27	3.18	3.28	3.06	.....	3.23
July 3	3.19	.....	.....	3.10	2.96	3.13	3.17	.....
5	3.18	2.74	3.06	2.97	.....	.....	.....	.....
13	3.39	.....	.....	.....	.....	.....	.....	.....
15	3.26	3.17	.....	3.17	3.12	3.16	3.36	3.27
16	3.23	3.27	.....	3.15	3.16	3.20	3.24	3.16
17	3.21	.....	.....	3.18	2.81	3.37	3.13	.....
18	3.22	.....	.....	3.23	3.06	3.16	2.88	3.15
19	3.26	3.28	.....	3.15	3.36	3.29	3.27	3.33
20	3.15	3.11	3.43	3.24	2.91	3.04	3.22	3.14
21	3.20	3.15	.....	3.25	3.22	3.33	3.19	3.19
30	3.11	.....	.....	3.15	3.14	3.15	.....	3.10
31	2.92	.....	.....	.....	3.11	3.11	.....	.....
Aug. 3	3.16	.....	.....	3.13	.....	.....	3.28	.....
13	3.08	.....	.....	3.10	3.11	3.12	3.18	2.94
14	3.22	.....	.....	3.17	3.33	3.08	3.21	.....
15	3.17	.....	.....	2.81	.....	.....	3.35	.....
16	3.25	.....	.....	3.25	3.00	3.08	3.09	2.86
18	3.21	2.97	2.62	3.07	3.17	3.18	3.34	3.11
19	3.18	3.35	.....	3.05	3.14	3.29	3.29	3.19
20	3.16	.....	.....	2.95	3.00	2.94	3.24	.....
22	3.02	.....	.....	3.30	3.07	3.03	3.06	.....
23	3.03	.....	.....	.....	.....	3.12	3.01	.....
31	3.15	.....	.....	3.04	3.34	3.23	3.28	.....
Sept. 1	3.22	.....	.....	3.39	.....	3.31	3.25	.....
2	3.34	.....	.....	3.27	2.92	3.36	2.99	.....
4	3.05	2.46	3.16	3.33	3.05	2.99	3.22	2.98
5	3.15	3.03	2.85	2.95	3.18	3.13	3.10	3.07
7	3.07	.....	3.41	3.27	3.42	3.10	3.17	3.40
9	.....	.....	.....	3.08	3.15	2.95	3.37	3.16
13	.....	.....	.....	.....	.....	3.14	3.04	3.35
15	.....	.....	.....	3.11	3.11	3.05	3.09	3.11

GROUP VII.

Star	51	52	53	54	55	56	57	58	59	60	61	62	63
	"	"	"	"	"	"	"	"	"	"	"	"	"
1911—June 9	3.34	3.41	3.30	.....	.....	.....	.....	.....	.....	.....	.....	.....	.....
20	3.50	3.52	3.80	.....	3.63	3.20	.....	.....	.....	.....	.....	.....	.....
21	3.45	3.48	3.40	.....	3.55	3.48	.....	.....	.....	.....	.....	.....	.....
27	3.39	3.26	3.22	.....	.....	3.19	.....	.....	.....	.....	.....	.....	.....
28	3.46	3.63	3.32	3.52	3.49	3.51	3.52	3.30	.....	.....	.....	.....	.....
29	3.47	3.53	3.59	3.71	3.80	3.14	3.46	3.58	.....	.....	.....	.....	.....
30	3.42	3.57	3.63	.....	3.63	3.34	.....	3.39	.....	.....	.....	.....	.....
July 1	3.32	3.30	3.47	3.29	3.44	3.42	3.74	3.65	.....	.....	.....	.....	.....
14	3.56	3.59	3.49	3.41	3.60	3.66	.....	.....	.....	.....	.....	.....	.....
15	3.96	3.80	3.46	3.40	3.21	3.36	3.38	3.37	3.38	3.33	.....	.....	3.77
17	3.67	3.55	3.35	.....	3.22	3.45	.....	3.51	3.53	3.35	3.26	3.25	3.37
22	3.47	3.51	3.40	3.76	3.67	3.41	3.60	3.54	2.97	4.00	3.52	3.58	3.31
24	3.47	3.50	3.48	3.03	3.13	3.26	3.55	3.07	3.27	3.88	3.58	3.52	3.42
27	3.54	3.87	3.86	3.63	3.73	3.44	3.32	3.51	3.21	3.70	3.66	3.59	3.40
31	3.54	3.42	3.49	3.46	3.60	3.60	3.45	3.39	3.33	3.47	3.45	3.50	3.42
Aug. 7	3.56	3.54	3.43	3.62	.....	3.18	3.51	.....	.....	3.74	.....	.....	.....
8	3.86	3.60	3.69	3.82	.....	.....	.....	.....	.....	.....	.....	.....	.....
10	3.64	3.87	3.80	3.83	3.64	3.09	3.51	3.64	.....	3.83	.....	.....	3.50
Sept. 30	3.25	3.37	3.62	3.60	3.45	3.36	3.49	3.66	3.29	3.83	3.92	4.02	3.26
Oct. 5	3.41	3.65	3.58	.....	3.47	3.81	.....	3.47	.....	.....	.....	.....	.....
6	3.57	3.34	3.61	3.44	3.51	3.39	3.49	3.56	.....	3.22	.....	.....	.....
11	3.69	3.22	3.54	3.37	.....	3.28	.....	.....	.....	3.30	.....	.....	3.42
12	3.37	3.50	3.45	3.50	3.77	3.58	3.41	3.42	.....	3.29	.....	.....	3.72
16	3.38	3.51	3.56	3.45	.....	3.57	3.51	.....	3.53	3.35	3.40	3.36	3.34
18	3.51	3.39	3.57	3.49	3.47	3.24	.....	3.44	3.71	3.35	3.34	3.35	3.58
23	3.55	3.31	3.55	3.44	3.30	3.55	3.38	3.23	3.25	3.15	3.38	3.43	3.28
24	3.50	3.39	3.62	3.50	3.31	.....	3.38	3.42	3.35	3.16	3.02	2.92	3.69
25	.....	3.38	.....	3.33	3.45	3.38	3.50	3.48	3.47	3.35	3.50	3.38	3.44
26	.....	3.32	.....	3.55	3.28	3.52	3.45	3.37	3.43	3.29	3.24	3.32	3.50
29	.....	.....	.....	.....	.....	.....	.....	.....	3.61	.....	3.50	3.57	.....
Nov. 2	.....	.....	.....	.....	.....	.....	.....	.....	3.02	3.28	3.22	3.07	3.44
3	.....	.....	.....	.....	.....	.....	.....	.....	3.66	3.70	3.49	3.52	3.62
7	.....	.....	.....	.....	.....	.....	.....	.....	3.28	3.00	.....	.....	3.54
10	.....	.....	.....	.....	.....	.....	.....	.....	3.51	2.93	3.31	3.27	3.56
15	.....	.....	.....	.....	.....	.....	.....	.....	3.51	3.10	3.39	3.36	3.74

TABLE 16.—*Individual latitudes, photographic*—Continued.

GROUP VII—Continued.

Star	51	52	53	54	55	56	57	58	59	60	61	62	63
	″	″	″	″	″	″	″	″	″	″	″	″	″
1911—Nov. 16	.....	.....	.....	.....	.....	.....	.....	.....	3.33	.....	3.21	3.39	.....
19	.....	.....	.....	.....	.....	.....	.....	.....	3.46	3.13	3.24	3.22	3.50
22	.....	.....	.....	.....	.....	.....	.....	.....	3.62	3.39	3.38	3.31	3.57
30	.....	.....	.....	.....	.....	.....	.....	.....	3.24	3.32	3.33	3.31	3.27
Dec. 1	.....	.....	.....	.....	.....	.....	.....	.....	3.47	3.25	3.32	3.34	3.55
1912—June 20	3.35	3.33	3.49	3.14	.....	3.25	.....	.....	.....	.....	.....	.....	.....
July 2	3.37	2.76	2.98	.....	3.00	3.90	.....	3.22	.....	.....	.....	.....	.....
3	3.20	3.20	3.41	3.18	3.30	3.28	3.25	3.23	.....	.....	.....	.....	.....
5	2.96	3.35	3.34	.....	.....	.....	.....	.....	.....	.....	.....	.....	.....
7	3.40	3.37	3.39	3.48	3.39	3.20	3.36	3.31	3.37	3.21	3.45	3.42	.....
19	3.33	2.99	3.00	3.24	3.28	3.24	3.07	3.39	.....	.....	.....	.....	.....
22	.....	3.31	.....	.....	3.52	3.06	.....	3.21	.....	2.88	.....	.....	3.38
26	3.41	3.47	3.33	.....	.....	3.28	.....	.....	.....	.....	.....	.....	.....
27	3.45	3.26	.....	.....	.....	3.56	.....	.....	3.26	3.06	3.19	3.17	3.34
Aug. 4	3.25	3.08	3.25	3.12	3.24	3.12	3.30	3.13	3.70	3.48	3.49	3.46	3.63
5	3.39	3.37	3.35	3.11	.....	3.07	3.29	.....	.....	.....	.....	.....	.....
12	.....	3.62	.....	3.37	3.52	3.09	3.24	3.26	.....	3.39	.....	.....	3.59
15	.....	3.01	.....	.....	3.56	3.46	.....	3.43	.....	.....	.....	.....	.....
20	3.40	.....	3.31	3.23	3.60	.....	3.06	3.04	.....	.....	.....	.....	.....
23	3.02	3.01	3.02	3.48	3.07	3.14	3.42	3.09	.....	3.75	.....	.....	3.23
24	3.38	3.38	3.34	3.23	3.53	3.05	3.42	3.47	.....	3.62	.....	.....	3.20
27	.....	.....	.....	3.49	3.08	.....	3.19	3.00	.....	3.03	.....	.....	.....
29	3.31	3.44	3.65	.....	3.29	3.37	.....	3.60	.....	.....	.....	.....	.....
31	3.29	3.80	3.44	.....	.....	3.13	.....	.....	.....	.....	.....	.....	.....
Sept. 5	3.47	3.35	3.29	3.45	.....	3.25	3.42	.....	.....	.....	.....	.....	.....
6	3.42	3.48	3.38	3.52	3.58	3.20	3.39	3.44	.....	3.69	.....	.....	3.05
8	3.50	3.65	3.49	3.57	3.45	3.18	3.34	3.55	3.15	3.61	3.46	3.50	2.82
9	3.40	3.40	3.53	3.35	3.54	3.38	3.24	3.27	3.28	3.26	3.37	3.49	3.34
10	3.28	3.41	3.31	3.53	3.42	3.30	3.37	3.51	3.36	3.54	3.31	3.37	3.17
12	3.11	3.36	3.28	3.34	3.33	3.42	3.59	3.47	3.20	3.38	3.45	3.44	3.06
17	.....	3.19	.....	.....	.....	3.15	.....	.....	3.55	3.51	3.46	3.45	3.34
20	3.34	3.39	3.47	3.66	3.61	3.38	3.38	3.45	.....	.....	.....	.....	.....
28	3.57	2.60	2.69	2.98	3.21	3.08	3.94	3.60	3.36	3.63	3.70	3.61	3.18
30	3.29	2.71	3.04	3.14	3.39	3.23	3.86	3.78	3.88	3.65	3.32	3.38	3.70
Oct. 1	3.50	3.52	3.46	3.47	3.44	3.52	3.81	3.65	3.91	3.57	3.44	3.53	3.62
2	3.52	3.27	3.28	3.29	3.18	3.73	3.73	3.46	3.52	.....	3.54	3.67	.....
3	3.41	3.51	3.66	3.45	3.54	3.18	3.40	3.60	.....	.....	.....	.....	.....
4	3.31	3.46	3.35	3.40	3.46	3.28	3.38	3.45	3.35	3.37	3.35	3.48	3.35
5	3.40	3.58	3.52	3.56	3.60	3.38	3.45	3.53	3.65	3.56	3.38	3.39	3.39
6	3.51	3.72	3.62	3.43	3.66	3.25	3.43	3.47	3.46	3.36	3.53	3.57	3.45
7	3.54	3.45	3.41	3.41	3.15	3.69	3.35	3.27	2.92	3.21	3.39	3.39	3.80
9	3.40	3.43	3.58	.....	3.52	3.28	.....	3.42	.....	.....	.....	.....	.....
10	3.47	3.31	3.44	.....	3.04	3.37	.....	.....	.....	.....	.....	.....	.....
14	3.45	3.07	3.07	3.21	.....	3.55	3.79	3.54	3.90	3.34	3.36	3.43	4.04
15	3.95	3.53	3.42	3.47	3.52	3.41	3.42	3.45	3.38	.....	3.53	3.46	.....
16	3.33	3.10	3.34	3.55	3.40	3.56	3.31	3.40	3.44	3.29	3.65	3.67	3.87
20	3.47	3.70	3.42	3.39	3.40	3.47	3.37	3.50	3.50	3.81	3.75	3.54	3.85
21	3.61	3.50	3.52	3.36	.....	3.44	3.42	.....	.....	.....	.....	.....	.....
26	3.45	3.64	3.38	3.71	3.64	3.51	3.37	3.50	3.45	3.55	3.39	3.39	3.54
27	3.53	3.20	3.17	3.69	3.42	3.31	3.43	3.49	3.48	3.53	3.55	3.53	3.59
28	3.51	3.65	3.98	3.41	3.43	3.29	3.35	3.53	3.44	3.53	3.56	3.57	3.42
29	3.66	3.61	3.51	3.35	3.26	3.37	3.27	3.25	3.26	3.61	3.52	3.52	3.51
30	3.31	3.44	3.16	3.20	3.52	3.48	3.44	3.67	3.74	3.59	3.36	3.32	3.32
1913—June 29	3.01	2.99	3.24	3.28	2.99	2.92	3.24	3.08	.....	.....	.....	.....	.....
30	3.02	3.09	3.12	3.21	3.10	3.13	3.14	3.08	.....	.....	.....	.....	.....
July 3	3.42	3.02	2.83	3.18	3.02	2.97	3.05	3.20	.....	.....	.....	.....	.....
7	3.41	3.02	2.98	3.09	3.01	3.31	3.16	3.23	2.83	3.10	3.30	3.32	3.36
8	3.09	3.17	3.13	3.00	3.02	3.22	3.28	3.13	3.22	3.01	3.09	3.20	3.23
16	3.27	3.14	3.25	3.05	2.96	3.06	3.24	3.07	3.45	.....	3.06	2.95	.....
18	3.28	3.04	3.14	3.13	3.20	3.17	3.34	3.21	3.16	3.00	3.06	3.16	3.24
21	3.10	3.07	3.26	3.27	3.05	3.12	3.26	3.09	3.47	3.05	3.18	3.29	3.24
25	2.95	3.23	3.37	3.07	2.98	2.99	3.13	3.05	.....	.....	.....	.....	.....
26	3.07	3.18	3.11	3.13	3.07	3.13	3.11	3.10	.....	.....	.....	.....	.....
Aug. 2	3.07	3.13	3.07	3.21	3.13	3.12	3.08	3.31	3.11	2.99	2.97	3.06	2.96
4	2.85	3.11	3.07	3.19	2.97	3.19	3.35	2.92	2.84	3.23	3.19	3.14	3.13
5	3.19	3.23	3.19	.....	3.01	3.34	.....	3.13	3.05	.....	3.10	2.99	.....
7	3.13	3.12	3.11	3.33	3.09	3.19	3.08	3.07	3.03	3.01	3.07	3.18	2.97
11	3.07	3.10	.....	.....	.....	3.04	.....	.....	.....	.....	.....	.....	.....
14	3.19	3.20	2.99	.....	.....	2.96	.....	.....	.....	.....	.....	.....	.....
15	3.12	3.00	3.17	3.05	3.09	3.12	3.03	3.09	3.03	3.03	3.07	3.17	3.03
16	3.08	3.16	3.26	3.11	3.05	3.12	3.11	3.05	3.13	3.05	3.05	3.07	3.02
19	3.18	3.08	3.16	3.16	3.20	3.15	3.19	3.40	.....	3.02	.....	.....	3.20
20	3.08	2.96	3.11	3.08	3.00	3.14	3.18	2.90	3.08	2.90	3.09	3.14	2.95
24	3.16	3.13	3.21	3.02	3.20	3.11	2.96	3.28	3.08	3.00	2.75	2.97	3.16
25	2.95	2.96	3.19	3.05	3.05	3.11	3.03	3.32	2.96	2.98	3.14	3.25	3.04
Sept. 4	3.21	3.11	3.10	3.13	3.12	3.08	3.02	3.11	3.07	3.04	3.04	3.12	3.02
5	3.18	3.31	3.14	3.34	3.16	3.21	3.02	3.07	2.92	3.16	2.98	3.09	2.98
9	3.10	3.19	3.26	3.20	3.61	3.20	3.07	3.66	3.10	3.33	2.92	2.94	3.37
10	2.94	3.13	3.16	2.99	3.12	2.71	3.10	2.99	3.15	3.20	2.89	3.01	3.04
11	.....	3.24	.....	3.21	3.22	3.05	3.10	3.19	3.04	3.24	2.98	3.13	2.97
22	3.25	3.36	3.39	3.08	3.16	3.20	3.28	3.12	3.07	3.18	2.89	3.05	3.20
23	3.20	3.06	3.14	3.33	3.20	3.08	3.06	3.18	3.26	.....	3.30	3.32	.....
24	3.13	3.20	3.27	3.22	3.25	3.22	3.23	3.20	3.24	3.19	3.28	3.26	3.15
25	3.16	3.17	3.18	3.10	3.22	3.31	3.20	3.20	3.31	3.26	3.25	3.20	3.13
27	3.16	3.29	3.21	3.25	3.22	3.14	3.31	3.35	.....	3.04	.....	.....	3.12
28	3.09	3.11	3.07	3.11	3.19	3.13	3.19	3.15	3.02	3.16	3.22	3.16	3.18
Oct. 3	3.06	3.08	3.23	3.17	3.22	3.16	3.24	3.25	3.21	.....	3.17	3.20	.....
4	3.14	2.91	2.89	3.11	3.13	3.09	3.29	3.22	3.18	3.18	3.08	3.15	3.16
12	3.18	3.24	3.06	2.95	3.08	3.36	3.25	3.16	3.12	3.21	3.23	3.19	3.25
13	3.25	3.27	3.26	3.26	3.34	3.32	3.15	3.27	3.27	3.16	3.24	3.17	3.16
14	3.28	3.11	3.19	3.37	3.35	3.13	3.18	2.96	3.50	3.39	3.48	3.41	3.30

TABLE 16.—*Individual latitudes, photographic*—Continued.

GROUP VII—Continued.

Star	51	52	53	54	55	56	57	58	59	60	61	62	63
	″	″	″	″	″	″	″	″	″	″	″	″	″
1913—Oct. 16	3.10	3.23	3.17	3.20	3.26	3.03	3.20	3.08	3.06	3.20	3.18	3.12	3.30
22	3.25	3.11	3.15	3.18	3.23	3.19	3.16	3.19	3.22	3.23	3.10	3.20	3.21
26	3.14	3.21	3.09	.....	.....	.....	.....	.....	3.30	3.28	3.13	3.11	3.12
27	3.19	3.24	3.27	3.11	3.16	3.23	3.30	3.35	.....	.....	.....	.....	.....
29	.....	.....	.....	3.24	3.19	.....	3.26	3.25	3.10	.....	3.16	3.12	.....
Nov. 1	.....	.....	.....	3.08	2.97	.....	3.36	3.19	3.20	3.20	3.28	3.37	3.04
3	.....	.....	.....	3.19	.....	.....	3.15	.....	.....	.....	.....	.....	.....
4	.....	.....	.....	3.22	3.31	.....	3.19	3.18	3.17	3.29	3.18	3.20	3.42
5	.....	.....	.....	3.08	3.29	.....	3.26	3.07	3.29	3.05	3.22	2.98	3.12
1914—June 29	3.09	3.02	2.99	3.40	3.59	3.32	3.22	.....	.....	.....	.....	.....	.....
July 15	3.28	3.25	3.24	3.28	.....	3.18	.....	3.30	3.32	3.07	3.21	3.16	3.42
16	3.29	3.22	3.23	3.05	3.21	3.01	3.22	3.18	3.12	3.16	3.24	3.14	3.02
17	3.20	3.14	3.16	3.15	3.19	3.26	3.35	3.28	3.24	3.00	3.04	3.06	3.37
19	3.00	3.32	3.25	3.02	3.16	3.14	3.18	3.30	3.21	3.19	3.02	3.06	3.18
20	3.07	3.22	3.19	3.29	3.03	3.12	.....	3.28	3.28	3.34	3.25	3.38	3.19
21	3.29	3.13	3.17	3.22	3.04	3.10	3.32	3.13	3.27	3.08	3.33	3.36	3.11
30	3.05	2.99	2.91	3.17	2.90	3.15	3.17	3.24	.....	.....	.....	.....	.....
31	3.14	3.22	3.36	3.08	3.07	3.18	3.06	3.18	.....	2.94	3.20	3.26	3.10
Aug. 3	.....	3.25	3.38	3.27	3.38	3.06	3.21	3.31	.....	.....	.....	.....	.....
13	3.08	3.29	3.22	3.19	3.25	3.08	3.00	3.29	3.22	3.36	3.08	3.16	3.13
15	3.07	3.13	3.19	3.43	2.97	3.22	3.15	3.21	3.07	3.13	3.19	3.20	3.36
16	3.14	3.12	3.08	3.15	3.09	2.99	3.08	3.18	.....	2.99	3.23	3.16	3.06
18	3.34	2.96	2.97	3.16	3.35	3.09	3.10	3.34	.....	3.09	3.23	3.13	3.25
19	3.24	3.12	3.01	3.27	3.12	3.41	3.36	3.27	3.17	3.09	2.99	3.02	3.55
20	.....	.....	.....	.....	.....	3.11	3.32	.....	.....	.....	3.05	3.03	3.34
22	3.19	3.00	3.22	.....	.....	3.17	3.10	3.15	.....	3.08	3.01	3.01	3.21
23	3.20	3.12	3.13	2.89	2.98	2.95	3.22	3.26	.....	3.00	3.15	3.05	3.12
31	3.41	3.36	3.03	3.19	3.08	3.06	3.10	3.27	.....	3.03	3.11	3.10	3.27
Sept. 1	3.33	3.24	.....	3.18	3.15	3.05	3.16	3.08	.....	3.11	2.94	2.90	3.30
4	3.14	3.15	2.96	3.03	3.14	3.07	3.24	3.28	.....	3.36	3.11	3.07	3.35
5	3.20	3.13	3.09	3.25	3.17	2.96	3.11	3.19	3.06	3.09	3.11	3.03	3.19
7	.....	3.19	.....	3.34	.....	.....	.....	.....	.....	2.86	3.18	3.18	3.36
8	3.09	3.05	3.05	3.03	2.99	3.02	3.15	3.30	3.20	.....	.....	.....	.....
9	3.32	3.11	3.18	.....	3.24	3.15	3.26	3.23	3.17	3.03	3.27	3.31	3.14
13	3.15	2.69	2.67	2.89	3.09	3.16	3.03	3.27	3.18	3.08	3.17	3.19	3.31
14	3.18	3.13	3.08	3.04	3.24	3.06	3.04	3.01	3.08	3.16	3.07	3.09	3.19
19	3.19	3.05	2.93	3.26	3.13	3.00	2.99	3.13	.....	3.24	3.11	3.19	2.92
20	3.30	3.10	2.98	3.16	3.05	3.16	3.23	3.21	3.15	3.00	3.11	3.12	3.22
21	3.26	3.13	3.20	3.26	3.42	3.16	3.42	3.20	3.35	3.08	3.10	3.10	3.27
22	.....	3.16	2.99	3.21	3.21	3.18	3.26	3.08	.....	3.35	3.12	3.13	3.25
26	3.11	2.93	3.08	2.94	.....	3.06	3.09	2.96	2.95	3.10	2.78	2.92	3.20
28	3.13	3.03	3.05	2.93	2.84	3.03	3.14	3.23	3.23	3.05	2.90	2.97	3.08
29	3.10	3.10	3.13	3.11	3.04	3.10	3.15	3.03	3.28	3.05	3.12	3.11	3.10
30	3.22	3.15	3.08	3.04	.....	2.97	3.06	3.23	2.92	3.02	3.20	3.24	3.42
Oct. 1	2.84	3.15	3.05	3.15	3.04	3.37	3.16	3.22	3.14	.....	3.19	3.25	3.22
2	3.13	2.94	3.05	2.97	3.11	3.11	3.05	3.11	3.15	3.05	3.00	3.06	3.07
5	3.23	3.22	3.29	3.16	3.16	3.14	3.07	3.15	3.20	2.95	3.08	3.05	3.21
9	3.15	3.03	3.13	2.98	3.02	2.98	2.99	3.09	3.15	2.98	3.04	3.05	.....
10	3.40	3.17	3.10	3.15	3.11	3.10	3.18	3.15	.....	.....	3.06	3.18	2.88
12	3.55	3.19	3.06	3.00	3.13	2.97	3.06	3.24	3.15	3.35	3.09	3.19	2.84
17	2.97	3.03	3.14	2.91	2.91	2.98	.....	3.10	.....	3.11	.....	.....	.....
19	3.34	3.13	3.09	3.04	2.93	3.05	2.94	3.16	3.02	2.95	2.88	3.10	3.16
20	2.98	2.83	3.07	2.94	3.02	3.07	3.03	2.94	.....	2.94	3.03	3.02	3.14
21	3.23	3.29	3.20	3.29	3.17	2.88	2.94	2.90	2.98	3.24	3.07	3.21	2.81
22	3.25	3.13	2.97	3.23	3.03	3.09	3.13	3.25	3.10	2.91	3.08	3.13	3.15
23	3.04	2.92	3.00	3.07	3.00	3.02	3.16	3.01	2.98	3.02	3.14	3.10	3.07

TABLE 17.—*Results from scale stars (the Lick declinations are used throughout).*

2*a* (A. G. Lund 2448).

Date.	ϕ	Date.	ϕ	Date.	ϕ	Date.	ϕ
	″		″		″		″
1911—Oct. 18	2.93	1912—Jan. 13	2.86	1912—Dec. 9	3.19	1913—Dec. 5	2.74
29	3.14	16	2.39	12	3.13	11	3.17
Nov. 16	2.55	19	2.69	28	3.11	15	2.93
Dec. 5	3.13	21	2.70	1913—Jan. 14	3.10	19	3.06
19	2.84	22	2.92	21	2.89	29	2.97
28	2.75	27	2.62	Feb. 1	3.66	1914—Jan. 29	2.88
1912—Jan. 7	2.91	Feb. 4	2.41	4	2.93	Feb. 1	2.74
9	2.66	6	2.68	6	2.87	2	3.12

NOTE.—A correction of +0″.18 for film distortion has been applied to ϕ, 1911, Oct. 18, to 1912, Feb. 6. (See p. 43.)

2*b* (A. G. Lund 3568).

	″		″		″		″
1912—Jan. 9	2.84	1912—Feb. 4	1.79	1913—Jan. 21	3.13	1913—Dec. 15	2.41
13	2.67	6	2.02	Feb. 1	2.77	19	2.53
19	2.23	Dec. 9	2.88	4	2.69	29	2.59
21	2.55	12	3.02	6	2.95	1914—Jan. 29	2.62
22	2.33	28	2.87	Dec. 5	2.74	Feb. 1	2.74
27	1.90	1913—Jan. 14	2.89	11	2.53	2	2.52

A correction of −0″.23 for film distortion applied, 1912, Jan. 9 to Feb. 6.

TABLE 17.—*Results from scale stars (the Lick declinations are used throughout)*—Continued.

3a (A. G. Lund 3773).

Date.	φ	Date.	φ	Date.	φ	Date.	φ
	″		″		″		″
1912—Jan. 19....	3.09	1913—Feb. 4....	2.78	1913—Mar. 20....	3.04	1914—Feb. 15....	2.80
21....	3.07	6....	3.43	22....	3.22	16....	3.07
22....	3.12	7....	3.22	Dec. 5....	2.82	17....	3.32
27....	3.02	8....	3.06	9....	3.06	21....	3.02
Feb. 4....	2.28	12....	3.30	11....	2.77	21....	2.93
6....	2.89	13....	3.25	15....	3.15	26....	3.23
Nov. 30....	3.25	14....	3.09	18....	2.80	Mar. 8....	3.17
Dec. 9....	3.54	18....	3.20	19....	2.94	10....	3.50
12....	3.60	23....	2.79	27....	3.28	12....	3.07
28....	3.26	25....	3.26	29....	3.13	13....	3.27
1913—Jan. 4....	3.23	28....	3.11	1914—Jan. 11....	3.03	15....	3.11
13....	2.96	Mar. 5....	3.01	29....	3.10	22....	2.97
14....	3.04	7....	3.39	Feb. 1....	2.87	24....	3.17
18....	2.75	12....	3.09	2....	3.04		
21....	3.60	17....	2.91	9....	3.03		
Feb. 1....	3.45	18....	2.72	11....	3.10		

A correction of −0″.14 for film distortion applied, 1912, Jan. 19 to Feb. 6.

3b (A. G. Lund 4137).

	″		″		″		″
1912—Jan. 19....	2.23	1912—Dec. 9....	3.37	1913—Feb. 4....	3.08	1913—Dec. 29....	2.73
21....	2.72	12....	3.42	6....	2.94	1914—Jan. 29....	2.90
22....	2.78	28....	3.40	Dec. 5....	2.83	Feb. 1....	2.83
27....	2.85	1913—Jan. 14....	2.96	11....	2.78	2....	3.05
Feb. 4....	2.74	21....	3.40	15....	2.76		
6....	2.32	Feb. 1....	3.02	19....	3.03		

A correction of −0″.20 for film distortion applied, 1912, Jan. 19 to Feb. 6.

3c (A. G. Lund 4538).

	″		″		″		″
1912—Jan. 19....	2.93	1912—Dec. 9....	2.94	1913—Feb. 4....	2.86	1913—Dec. 29....	2.59
21....	2.78	12....	2.92	6....	2.29	1914—Jan. 29....	2.87
22....	2.44	28....	3.09	Dec. 5....	2.80	Feb. 1....	2.49
27....	2.59	1913—Jan. 14....	3.05	11....	2.62	2....	2.50
Feb. 4....	2.50	21....	2.96	15....	2.75		
6....	2.40	Feb. 1....	3.31	19....	2.87		

A correction of −0.″24 for film distortion applied, 1912, Jan. 19 to Feb. 6.

4a (A. G. Lund 6078).

	″		″
1914—Apr. 3....	2.64	1914—May 26....	2.91
5....	3.00	31....	2.97
10....	2.97	June 2....	2.86

φ above is based on Boss's δ.

6a (A. G. Lund 7481).

	″		″		″		″
1912—May 4....	3.57	1912—May 27....	3.33	1912—July 5....	3.64	1913—July 3....	3.45
9....	2.93	June 1....	3.26	1913—May 8....	3.73	1914—June 17....	3.72
10....	3.12	8....	3.43	June 5....	3.33	19....	3.49
18....	3.22	20....	3.72	9....	3.27	29....	3.56
20....	3.35	July 2....	3.70	18....	3.42	30....	3.82
26....	3.00	3....	3.36	30....	3.43	July 3....	3.36

A correction of −0.″22 for film distortion applied, 1912, May 4 to July 5.

7a (A. G. Lund 10649).

	″		″		″		″
1912—Sept. 8....	3.13	1912—Oct. 7....	3.78	1913—Sept. 25....	3.05	1914—Sept. 28....	2.61
9....	3.34	16....	3.99	Oct. 4....	2.76	29....	2.91
10....	4.12	20....	3.42	13....	2.94	30....	2.59
12....	2.77	26....	3.42	14....	3.02	Oct. 1....	2.79
20....	3.10	27....	3.20	22....	3.07	2....	2.73
30....	3.01	30....	3.25	1914—Sept. 13....	2.94	5....	2.83
Oct. 1....	2.94	1913—Sept. 4....	2.81	14....	2.83	12....	2.56
4....	3.04	5....	2.88	20....	2.73	19....	2.87
5....	3.22	22....	2.84	21....	2.94	21....	2.29
6....	3.38	24....	3.13	22....	2.93	23....	2.68

A correction of −0.″21 for film distortion applied, 1912, Sept. 8 to Oct. 20.

TABLE 17.—*Results from scale stars (the Lick declinations are used throughout)*—Continued.

7b (A. G. Lund 11071½).

Date.	φ	Date.	φ	Date.	φ	Date.	φ
	″		″		″		″
1911—July 15	2.94	1911—Nov. 2	2.39	1912—Oct. 4	2.29	1914—Sept. 9	2.33
17	2.88	3	2.71	5	2.48	13	2.32
22	2.60	7	2.82	6	2.70	14	2.24
24	2.21	10	2.64	7	2.87	20	2.32
27	2.20	15	2.85	16	3.16	21	2.51
31	2.59	16	2.52	20	2.91	22	2.29
Aug. 9	2.67	19	2.75	26	2.76	28	2.32
10	2.43	22	2.68	27	2.71	29	2.40
Sept. 30	2.43	26	2.69	30	2.50	30	2.22
Oct. 11	2.94	Dec. 1	2.73	1913—Sept. 4	2.22	Oct. 1	2.35
12	2.66	1912—Sept. 6	1.99	5	2.15	2	2.15
16	2.69	8	2.09	22	2.20	5	2.32
18	2.70	9	2.51	24	2.35	12	1.94
23	2.79	10	2.53	25	2.38	19	2.42
24	2.95	12	2.46	Oct. 4	2.31	21	1.98
25	2.23	20	2.59	13	2.47	23	2.35
26	2.97	30	2.81	14	2.33		
29	2.86	Oct. 1	2.77	22	2.34		

A correction of −0.″20 for film distortion applied, 1912, Sept. 6 to Oct. 20.

Corrections to reduce the assumed Declination D_0 to the mean of the group.—When a group has been completely observed on any night the error of the assumed declinations D_0 can be obtained by comparing the individual latitudes with the mean. The correction thus found is called r. When observations have been secured on a great many nights, errors of observation are eliminated and an accurate value of the correction can be obtained. From the discrepancies in the separate values of r for each star the probable error of the observations themselves are determined (p. 81).

The following table contains the mean yearly values of r for each star computed from the observed latitudes in Table 16, as outlined above. The number of nights upon which each value depends is given and the weighted mean computed from the annual values.

TABLE 18.—*Reduction of declinations to mean of group.*

GROUP I.

Year.	Number nights.	Star 1.	Star 2.	Star 3.	Star 4.	Star 5.	Star 6.	Star 7.	Star 8.	Star 9.	Star 10.
		″	″	″	″	″	″	″	″	″	″
1912	21	−0.022	+0.032	−0.010	−0.004	+0.043	−0.077	+0.002	+0.031	−0.014	+0.042
1913	27	− .039	− .008	+ .041	− .004	− .005	+ .066	+ .008	− .017	+ .001	− .041
1914	13	− .085	+ .024	+ .023	− .032	+ .077	+ .118	− .018	+ .018	− .039	− .086
Mean		− .043	+ .013	+ .009	− .010	+ .029	+ .028	.000	+ .007	− .011	− .022

GROUP II.

Year.	Number nights.	Star 11.	Star 12.	Star 13.	Star 14.	Star 15.	Star 16.	Star 17.	Star 18.	Star 19.	Star 20.
		″	″	″	″	″	″	″	″	″	″
1912-13	18	+0.066	+0.066	+0.027	−0.024	−0.007	−0.049	−0.042	−0.006	+0.012	−0.048
1913-14	15	− .075	− .046	− .029	+ .025	− .001	+ .034	+ .030	+ .014	+ .003	+ .053
Mean		+ .002	+ .015	+ .002	− .002	− .004	− .012	− .009	+ .003	+ .008	− .002

GROUP III.

Year.	Number nights.	Star 21.	Star 22.	Star 23.	Star 24.	Star 25.	Star 26.	Star 27.	Star 28.
		″	″	″	″	″	″	″	″
1912-13	20	+0.018	−0.022	−0.030	−0.007	+0.052	−0.025	+0.044	−0.028
1913-14	18	.000	+ .023	− .070	+ .030	− .009	− .009	− .010	+ .048
Mean		+ .009	− .001	− .049	+ .011	+ .023	− .017	+ .018	+ .008

TABLE 18.—*Reduction of declinations to mean of group*—Continued.

GROUP IV.

Year.	Number nights.	Star 29.	Star 30.	Star 31.	Star 32.	Star 33.	Star 34.
		″	″	″	″	″	″
1913	23	−0.003	−0.002	0.000	−0.001	+0.004	0.000
1914	24	− .053	+ .017	+ .056	+ .065	+ .020	− .106
Mean		− .028	+ .008	+ .028	+ .033	+ .012	− .055

GROUP V.

Year.	Number nights.	Star 35.	Star 36.	Star 37.	Star 38.	Star 39.	Star 40.	Star 41.	Star 42.
		″	″	″	″	″	″	″	″
1913	14	−0.004	+0.003	+0.001	−0.003	−0.005	+0.001	+0.003	0.000
1914	9	− .044	+ .062	− .023	− .033	.000	+ .011	+ .022	.000
Mean		− .020	+ .026	− .009	− .015	− .003	+ .005	+ .010	.000

GROUP VI.

Year.	Number nights.	Star 43.	Star 44.	Star 45.	Star 46.	Star 47.	Star 48.	Star 49.	Star 50.
		″	″	″	″	″	″	″	″
1913	21	−0.012	+0.001	+0.004	+0.003	+0.002	+0.002	−0.010	+0.012
1914	12	− .042	+ .074	+ .007	− .018	+ .041	+ .002	− .069	+ .003
Mean		− .023	+ .028	+ .005	− .005	+ .016	+ .002	− .031	+ .009

NOTE.—Star 50 is a binary, 8.2 and 10.2, $\Delta = 1''.8$.

GROUP VII.

Year.	Number nights.	Star 51.	Star 52.	Star 53.	Star 54.	Star 55.	Star 56.	Star 57.	Star 58.	Star 59.	Star 60.	Star 61.	Star 62.	Star 63.
		″	″	″	″	″	″	″	″	″	″	″	″	″
1913	26	+0.005	+0.012	−0.010	−0.001	−0.014	−0.014	−0.018	−0.010	+0.021	+0.018	+0.003	+0.024	−0.002
1914	21	− .070	+ .015	+ .034	+ .003	+ .023	+ .033	− .012	− .039	− .020	+ .038	+ .018	+ .048	− .028
Mean		− .028	+ .013	+ .010	+ .001	+ .003	+ .007	− .015	− .023	+ .003	+ .027	+ .010	+ .035	− .014

NOTE.—Star 51 is a binary, 7.0 and 9.2, $\Delta = 3''.3$; star 63 is a triple, 6.3, 9.2, and 12.5, $\Delta = 2''.7$.

Having thus found r, or the correction to reduce the assumed declination of each star to the group mean, the daily latitude given by the incomplete groups can now be corrected. This has been done in the following table of daily mean latitudes by groups:

TABLE 19.—*Daily means by groups.*

	Group.		Group.		Group.			Group.		Group.		Group.	
	V.	Wt.	VI.	Wt.	VII.	Wt.		V.	Wt.	VI.	Wt.	VII.	Wt.
	″		″		″			″		″		″	
1911—June 9	3.30	5	.....	.....	3.35	3	1911—July 20	3.44	4	3.61	4	.....	.....
15	3.16	4	.....	.....	.....	.....	22	3.48	4	3.41	4	3.52	12
18	3.37	2	.....	.....	.....	.....	24	3.32	2	3.69	4	3.38	12
20	3.67	2	3.87	3	3.53	5	27	3.46	2	3.62	5	3.57	12
21	3.25	3	3.71	1	3.47	5	28	3.44	2	.....	.....	.....	.....
26	3.15	3	.....	.....	.....	.....	31	.....	.....	3.52	5	3.47	12
27	3.34	4	3.45	4	3.27	4	Aug. 7	.....	.....	3.34	2	3.51	7
28	3.24	2	3.47	5	3.46	8	8	.....	.....	3.45	2	3.74	4
29	3.51	7	3.45	5	3.53	8	9	.....	.....	3.51	2	.....	.....
30	3.48	7	3.53	5	3.49	6	10	.....	.....	3.54	5	3.03	10
July 1	3.32	7	3.47	5	3.45	8	Sept. 30	.....	.....	.....	.....	3.51	12
6	3.28	2	3.35	1	.....	.....	Oct. 5	.....	.....	.....	.....	3.56	6
12	.....	.....	.....	1	.....	.....	6	.....	.....	.....	.....	3.46	9
14	3.41	2	.....	1	3.55	6	11	.....	.....	.....	.....	3.41	7
15	3.39	4	3.47	5	3.49	11	12	.....	.....	.....	.....	3.50	10
17	3.37	4	3.55	5	3.43	10	16	.....	.....	.....	.....	3.46	10

TABLE 19.—*Daily means by groups*—Continued.

	Group.		Group.		Group.		Group.	
	VII.	Wt.	I.	Wt.	II.	Wt.	III.	Wt.
	″		″		″		″	
1911—Oct. 18..	3.46	11	3.45	6	3.30	6	.....	.....
23..	3.37	12	3.34	4	.....	.....	.....	.....
24..	3.39	11	.....	.....	.....	.....	.....	.....
25..	3.42	10	3.29	8	.....	.....	.....	.....
26..	3.40	10	.....	.....	.....	.....	.....	.....
29..	3.58	2	3.42	8	3.37	9	.....	.....
Nov. 2..	3.23	4	3.30	5	.....	.....	.....	.....
3..	3.63	4	3.41	10	.....	.....	.....	.....
7..	3.28	3	3.34	10	.....	.....	.....	.....

	Group.		Group.		Group.		Group.	
	VII.	Wt.	I.	Wt.	II.	Wt.	III.	Wt.
	″		″		″		″	
1911—Nov. 10..	3.33	4	3.39	10	3.35	10	.....	.....
15..	3.44	4	.....	.....	.....	.....	.....	.....
16..	3.33	2	3.07	9	3.16	10	3.14	6
19..	3.34	4	3.46	10	3.66	4	.....	.....
22..	3.49	4	3.44	10	.....	.....	.....	.....
26..	.....	.....	3.41	10	3.26	10	3.24	8
30..	3.30	4	3.38	10	3.38	4	.....	.....
Dec. 1..	3.41	4	.....	.....	.....	.....	.....	.....

	Group.		Group.		Group.	
	I.	Wt.	II.	Wt.	III.	Wt.
	″		″		″	
1911—Dec. 4...	3.43	10	.....	.....	.....	.....
5...	3.37	10	3.39	10	.....	.....
6...	3.27	10	3.19	10	.....	.....
7...	3.20	10	3.32	10	3.28	8

	Group.		Group.		Group.	
	I.	Wt.	II.	Wt.	III.	Wt.
	″		″		″	
1911—Dec. 8...	3.12	7	.....	.....	.....	.....
19...	3.30	10	3.37	10	3.51	3
28...	3.35	10	3.49	7	.....	.....
1912—Jan. 7...	3.22	4	3.20	4	.....	.....

	Group.		Group.		Group.	
	II.	Wt.	III.	Wt.	IV.	Wt.
	″		″		″	
1912—Jan. 9...	3.17	7	3.10	6	.....	.....
13...	3.15	8	3.22	3	.....	.....
16...	3.01	9	3.32	4	.....	.....
19...	2.97	10	3.31	8	3.15	5
21...	3.05	10	3.25	8	3.21	5
22...	3.14	10	3.17	6	3.09	6
1...	3.18	9	3.27	5	3.19	6
27...	3.06	10	2.85	6	.....	.....
Feb. 4...	2.93	9	3.04	8	3.08	5
5...	3.03	6	2.88	7	.....	.....

	Group.		Group.		Group.	
	II.	Wt.	III.	Wt.	IV.	Wt.
	″		″		″	
1912—Feb. 6...	3.15	10	3.14	7	3.11	6
8...	3.05	5	3.23	7	3.22	6
9...	3.02	6	2.90	4	.....	.....
13...	3.10	6	3.10	7	.....	.....
23...	2.99	6	3.10	6	3.11	6
27...	3.19	6	3.04	8	3.32	6
28...	3.04	6	3.29	8	3.28	6
Mar. 7...	2.99	4	3.01	8	.....	.....
10...	3.11	4	2.91	8	3.20	6

	Group.		Group.		Group.	
	III.	Wt.	IV.	Wt.	V.	Wt.
	″		″		″	
1912—Mar. 13...	3.00	4	3.25	6	.....	.....
16...	2.98	8	3.02	6	.....	.....
17...	3.03	8	3.10	6	.....	.....
22...	3.12	8	3.29	2	.....	.....
25...	3.27	6	2.86	6	.....	.....

	Group.		Group.		Group.	
	III.	Wt.	IV.	Wt.	V.	Wt.
	″		″		″	
1912—Mar. 26...	2.83	8	.....	.....	.....	.....
30...	.....	.....	3.22	6	3.18	8
31...	2.98	6	.....	.....	.....	.....
Apr. 3...	3.03	3	3.41	6	3.26	8

	Group.		Group.		Group.	
	IV.	Wt.	V.	Wt.	VI.	Wt.
	″		″		″	
1912—Apr. 8...	3.05	6	.....	.....	.....	.....
9...	2.91	6	3.18	2	.....	.....
10...	3.25	6	3.24	6	.....	.....
11...	3.18	6	3.28	8	.....	.....
19...	3.21	5	3.50	2	.....	.....
23...	3.13	6	3.11	2	.....	.....
27...	3.28	6	3.17	8	.....	.....
May 1...	3.11	6	3.14	6	.....	.....
2...	3.09	2	3.26	8	3.10	4
3...	3.11	4	3.16	8	.....	.....

	Group.		Group.		Group.	
	IV.	Wt.	V.	Wt.	VI.	Wt.
	″		″		″	
1912—May 4...	3.18	6	3.28	8	3.01	7
9...	3.10	5	3.18	8	3.26	8
10...	3.03	6	3.37	8	3.11	4
13...	3.23	4	.....	.....	.....	.....
18...	3.13	4	3.10	8	3.25	4
20...	3.19	6	3.17	6	3.17	4
26...	.....	.....	3.36	8	3.20	6
27...	3.22	2	3.13	8	3.17	8
30...	3.42	2	3.09	8	3.07	4
31...	2.93	2	3.19	6	3.32	7

TABLE 19.—*Daily means by groups*—Continued.

	Group.		Group.		Group.	
	V	Wt.	VI.	Wt.	VII.	Wt.
	″		″		″	
1912—June 1...	3.07	8	3.22	8	.....	.....
8...	3.19	8	2.93	4	.....	.....
9...	3.07	6	3.27	4	.....	.....
10...	3.31	6	3.19	8	.....	.....
13...	3.20	2	.....	.....	.....	.....
20...	3.34	8	3.20	8	3.31	5
July 2...	3.14	8	3.35	8	3.20	6
3...	3.20	8	3.32	8	3.25	8

	Group.		Group.		Group.	
	V.	Wt.	VI.	Wt.	VII.	Wt.
	″		″		″	
1912—July 5...	3.28	8	3.18	8	3.21	3
7...	3.20	2	3.31	6	3.36	11
8...	3.18	6	3.27	8	.....	.....
19...	.....	.....	.....	.....	3.19	8
22...	.....	.....	3.35	4	3.23	6
26...	3.10	2	3.30	6	3.37	4
27...	3.00	2	3.37	8	3.30	7

	Group.		Group.		Group.	
	VI.	Wt.	VII.	Wt.	I.	Wt.
	″		″		″	
1912—Aug. 3...	3.44	2	.....	.....	.....	.....
4...	3.41	6	3.31	12	.....	.....
5...	.....	.....	3.26	6	.....	.....
12...	3.07	2	3.38	8	.....	.....
15...	3.44	2	3.36	4	.....	.....
20...	.....	.....	3.26	6	.....	.....
23...	.....	.....	3.22	10	.....	.....
24...	.....	.....	3.36	10	.....	.....
27...	.....	.....	3.16	5	.....	.....

	Group.		Group.	
	VI.	Wt.	VII.	Wt.
	″		″	
1912—Aug. 29...	3.20	4	3.44	6
31...	.....	.....	3.41	4
Sept. 5...	3.44	4	3.37	6
6...	3.37	4	3.41	10
8...	.....	.....	3.40	12
9...	3.47	4	3.37	12
10...	3.35	4	3.38	12
12...	3.34	4	3.33	12
14...	3.23	2	.....	.....

	Group.		Group.	
	VII.	Wt.	I.	Wt.
	″		″	
1912—Sept. 17....	3.38	6	.....	.....
20....	3.45	8	3.57	8
28....	3.29	12	.....	.....
30....	3.42	12	3.56	9
Oct. 1....	3.58	12	3.65	10
2....	3.46	10	3.61	10
3....	3.46	8	.....	.....
4....	3.38	12	3.46	10
5....	3.50	12	3.54	10
6....	3.49	12	3.52	10
7....	3.39	12	3.55	10
9....	3.43	6	.....	.....

	Group.		Group.	
	VII.	Wt.	I.	Wt.
	″		″	
1912—Oct. 10....	3.33	5	.....	.....
14....	3.49	11	.....	.....
15....	3.50	10	3.45	10
16....	3.44	12	3.43	10
20....	3.54	12	3.66	10
21....	3.47	6	.....	.....
26....	3.51	12	3.52	10
27....	3.45	12	3.62	10
28....	3.51	12	.....	.....
29....	3.43	12	3.43	10
30....	3.43	12	3.50	10

	Group.		Group.		Group.	
	I.	Wt.	II.	Wt.	III.	Wt.
	″		″		″	
1912—Nov. 3...	3.65	10	.....	.....	.....	.....
10...	3.68	10	3.74	4	.....	.....
11...	3.47	10	3.39	10	.....	.....
14...	3.51	10	3.28	2	.....	.....
16...	3.57	10	3.62	10	.....	.....
18...	3.49	10	3.56	10	.....	.....
19...	3.55	8	3.42	4	.....	.....
20...	3.58	10	3.47	10	.....	.....
22...	3.63	10	3.44	10	.....	.....
25...	3.56	6	.....	.....	.....	.....
26...	3.55	10	3.44	10	.....	.....
30...	3.57	10	3.54	10	3.47	8
1912—Dec. 3...	3.47	10	3.51	8	.....	.....

	Group.		Group.		Group.	
	I.	Wt.	II.	Wt.	III.	Wt.
	″		″		″	
1912—Dec. 6...	3.43	6	.....	.....	.....	.....
9...	3.62	10	3.61	10	3.60	8
12...	3.59	10	3.64	10	3.72	8
13...	3.40	8	3.59	10	.....	.....
14...	3.54	10	3.58	8	.....	.....
15...	3.49	8	3.45	8	.....	.....
20...	3.54	10	3.58	10	.....	.....
21...	3.46	10	3.52	10	4.02	2
22...	3.50	10	.....	.....	.....	.....
24...	3.41	4	.....	.....	.....	.....
28...	3.44	8	3.51	10	3.55	8
1913—Jan. 4...	3.26	6	3.47	6	3.61	1

TABLE 19.—*Daily means by groups*—Continued.

	Group.		Group.		Group.	
	II.	Wt.	III.	Wt.	IV.	Wt.
	″		″		″	
1913—Jan. 9...	3.50	8	...	...	...	...
13...	3.56	10	3.49	7	...	...
14...	3.61	10	3.61	7	...	...
15...	3.55	4	...	...	...	...
18...	3.35	2	3.35	8	...	...
21...	3.64	10	3.31	8	...	...
22...	3.54	6	3.38	2	...	...
25...	3.42	8	...	...	...	...
26...	3.41	6	...	...	...	...
30...	3.37	6	...	...	...	...
Feb. 1...	3.55	10	3.44	8	...	...
2...	3.41	4	...	...	...	...
4...	3.36	10	3.52	8	...	...
5...	3.49	4	...	...	...	...
6...	3.37	10	3.32	8	...	...

	Group.		Group.		Group.	
	II.	Wt.	III.	Wt.	IV.	Wt.
	″		″		″	
1913—Feb. 7...	3.37	6	3.31	2	...	...
8...	3.15	8	3.43	8	3.19	4
12...	3.32	8	3.40	8	3.51	6
13...	3.40	4	3.40	8	3.45	6
14...	3.27	6	3.40	8	...	...
18...	3.36	6	3.36	8	3.40	4
23...	3.22	6	3.35	2	...	...
25...	3.40	6	3.38	6	3.35	6
28...	3.44	6	3.31	8	...	...
Mar. 2...	3.45	6	3.22	6	3.31	6
5...	3.52	4	3.26	8	3.48	2
6...	...	...	3.30	4	3.35	4
7...	3.18	6	3.44	4	...	...
11...	...	...	...	...	3.21	6
12...	3.19	2	3.26	2	...	...

	Group.		Group.		Group.	
	III.	Wt.	V.	Wt.	IV.	Wt.
	″		″		″	
1913—Mar. 17...	3.27	8	3.36	6	...	...
18...	3.19	8	3.36	6	...	...
20...	3.31	8	3.40	6	...	...
22...	3.30	8	3.24	6	...	...
27...	...	...	3.38	6	...	...
28...	...	...	3.26	4	...	...
31...	3.09	6	3.24	6	...	...
Apr. 1...	3.37	4	3.26	4	...	...
5...	...	...	...	...	3.51	5
6...	...	...	3.23	6	3.26	2
8...	...	...	3.14	2	3.29	8
17...	...	...	3.36	6	3.25	8

	Group.		Group.		Group.	
	III.	Wt.	V.	Wt.	IV.	Wt.
	″		″		″	
1913—Apr. 18...	...	...	3.61	2	...	...
19...	...	...	3.33	6	3.50	4
20...	...	...	3.22	6	3.28	3
21...	...	...	3.33	6	3.34	8
22...	...	...	3.28	2	3.24	6
24...	...	...	3.25	6	3.12	6
25...	...	...	3.29	6	3.14	6
29...	...	...	3.30	4	3.30	7
30...	...	...	3.19	6	3.22	8
May 1...	...	...	3.24	6	3.26	8
2...	...	...	3.26	6	3.29	6
3...	...	...	3.34	5	3.39	3

	Group.		Group.		Group.	
	IV.	Wt.	V.	Wt.	VI.	Wt.
	″		″		″	
1913—May 8...	3.20	4	3.15	8	3.28	6
10...	3.20	6	3.26	8	...	...
11...	3.20	2	3.18	4	3.14	8
19...	3.21	5	3.20	2	...	...
20...	3.23	6	3.18	6	...	...
24...	3.22	2	3.12	8	3.14	8
31...	3.24	2	3.26	6	3.21	8
June 2...	...	...	3.08	8	3.07	5

	Group.		Group.		Group.	
	IV.	Wt.	V.	Wt.	VI.	Wt.
	″		″		″	
1913—June 5...	...	...	3.13	8	3.05	8
6...	...	...	3.06	6	...	...
9...	...	...	3.13	8	3.17	8
13...	...	...	3.19	6	3.12	4
15...	...	...	3.10	4	...	...
17...	...	...	3.34	6	3.23	4
18...	...	...	3.09	8	3.12	8
28...	...	...	3.38	5	3.26	2

	Group.		Group.		Group.	
	V.	Wt.	VI.	Wt.	VII.	Wt.
	″		″		″	
1913—June 29...	2.99	4	3.19	8	3.09	8
30...	2.99	8	3.03	8	3.11	8
July 3...	3.00	8	3.02	8	3.08	8
6...	3.09	4	...	...	...	...
7...	3.15	4	3.11	6	3.15	12
8...	3.14	4	3.09	2	3.14	12
10...	3.08	6	3.12	2	...	...
11...	3.14	3	...	...	...	...
13...	3.23	4	...	...	...	...
14...	...	...	3.15	4	...	...
16...	2.91	2	3.04	6	3.15	10
18...	...	...	3.21	4	3.17	12
21...	3.13	4	3.01	8	3.18	12
22...	3.19	4	3.08	6	...	...
25...	...	...	3.18	8	3.09	8

	Group.		Group.		Group.	
	V.	Wt.	VI.	Wt.	VII.	Wt.
	″		″		″	
1913—July 26...	3.10	4	3.08	8	3.11	8
Aug. 2...	...	...	3.10	8	3.10	12
4...	...	...	3.05	6	3.08	12
5...	...	...	3.11	8	3.15	8
7...	...	...	3.10	8	3.10	12
11...	...	...	2.99	6	3.07	3
14...	...	...	3.09	5	3.08	4
15...	...	...	3.11	8	3.07	12
16...	...	...	3.02	8	3.10	12
19...	...	...	...	...	3.17	10
20...	...	...	3.14	8	3.04	12
21...	...	...	3.12	8	3.10	12
21...	...	...	3.17	2	3.10	12
25...	...	...	3.10	8	3.07	12
26...	...	...	3.11	8	...	...

TABLE 19.—*Daily means by groups*—Continued.

	Group.		Group.		Group.			Group.		Group.		Group.	
	VII.	Wt.	I.	Wt.	II.	Wt.		VII.	Wt.	I.	Wt.	II.	Wt.
	″		″		″			″		″		″	
1913—Sept. 4...	3.09	12	3.14	8	.....	.....	1913—Oct. 12...	3.17	12	.....	.....	.....	.....
5...	3.13	12	3.01	10	.....	.....	13...	3.24	12	3.24	10	3.27	4
9...	3.25	12	3.15	10	.....	.....	14...	3.27	12	3.24	10	3.34	4
10...	3.04	12	3.05	3	.....	.....	16...	3.17	12	3.21	6	.....	.....
11...	3.13	10	.....	.....	.....	.....	22...	3.19	12	3.20	10	3.19	4
22...	3.19	12	3.11	10	.....	.....	26...	3.18	7	3.21	10	3.21	4
23...	3.18	10	3.13	10	.....	.....	27...	3.23	8	.....	.....	.....	.....
24...	3.22	12	3.18	8	.....	.....	29...	3.19	6	.....	.....	.....	.....
25...	3.21	12	3.05	10	.....	.....	Nov. 1...	3.17	8	3.20	10	3.25	10
27...	3.21	10	3.12	7	.....	.....	3...	3.16	2	.....	.....	.....	.....
28...	3.13	12	.....	.....	.....	.....	4...	3.25	8	3.30	10	3.24	10
Oct. 3...	3.18	10	3.16	10	3.17	4	5...	3.16	8	3.16	8	.....	.....
4...	3.12	12	3.16	10	3.19	4							

	Group.		Group.		Group.			Group.		Group.		Group.	
	I.	Wt.	II.	Wt.	III.	Wt.		I.	Wt.	II.	Wt.	III.	Wt.
	″		″		″			″		″		″	
1913—Nov. 6...	3.20	10	3.20	10	.....	.....	1913—Dec. 15...	3.30	10	3.30	10	3.29	3
17...	3.22	10	3.25	10	.....	.....	18...	3.34	10	3.47	8	3.20	8
21...	3.23	10	3.26	10	.....	.....	19...	3.33	10	3.29	10	3.31	7
22...	3.20	10	3.25	10	.....	.....	22...	.....	.....	3.46	2	.....	.....
Dec. 5...	3.30	10	3.27	10	3.22	8	27...	3.26	8	3.19	8	3.24	2
9...	3.35	10	3.30	10	3.20	2	29...	3.22	10	3.35	10	3.32	8
11...	3.33	10	3.30	10	3.23	8	1914—Jan. 1...	3.36	8	.....	.....	.....	.....
12...	3.31	10	.....	.....	.....	.....	6...	3.33	10	3.42	6	.....	.....
13...	3.28	10	3.29	8	3.12	8							

	Group.		Group.		Group.			Group.		Group.		Group.	
	II.	Wt.	III.	Wt.	IV.	Wt.		II.	Wt.	III.	Wt.	IV.	Wt.
	″		″		″			″		″		″	
1914—Jan. 11...	3.22	8	3.28	8	.....	.....	1914—Feb. 16...	3.40	6	3.30	8	3.47	6
14...	3.09	2	.....	.....	.....	.....	17...	3.43	6	3.40	8	3.47	4
18...	3.23	4	.....	.....	.....	.....	21...	3.37	6	3.36	8	3.41	6
25...	3.42	4	.....	.....	.....	.....	24...	.....	.....	3.21	8	3.26	6
26...	3.30	6	.....	.....	.....	.....	26...	3.41	6	3.41	8	3.41	6
29...	3.37	10	3.41	8	.....	.....	Mar. 3...	3.45	5	.....	.....	.....	.....
Feb. 1...	3.50	10	3.17	7	.....	.....	8...	3.36	6	3.35	8	3.37	6
2...	3.44	10	3.40	5	.....	.....	10...	3.23	3	3.32	6	.....	.....
7...	3.29	8	.....	.....	.....	.....	12...	3.35	4	3.44	6	3.34	6
8...	3.47	8	3.33	8	3.61	6	13...	3.44	3	3.33	8	3.48	6
9...	3.25	8	3.33	7	3.30	2	14...	.....	.....	3.48	3	3.37	2
11...	3.30	8	3.38	4	3.42	6	15...	3.35	3	3.30	8	3.38	6
15...	3.29	6	3.06	2	.....	.....							

	Group.		Group.		Group.			Group.		Group.		Group.	
	III.	Wt.	IV.	Wt.	V.	Wt.		III.	Wt.	IV.	Wt.	V.	Wt.
	″		″		″			″		″		″	
1914—Mar. 20...	3.26	5	3.23	6	.....	.....	1914—Apr. 13...	.....	.....	3.36	6	3.41	8
22...	3.25	7	.....	.....	.....	.....	17...	.....	.....	3.48	6	3.45	8
24...	3.27	8	3.41	6	.....	.....	18...	.....	.....	3.51	2	3.43	6
Apr. 3...	3.22	5	3.38	6	3.43	7	21...	.....	.....	3.36	5	3.48	5
5...	3.30	5	3.47	6	3.30	8	23...	.....	.....	3.38	6	3.42	3
6...	.....	.....	3.48	5	3.40	4	27...	.....	.....	3.39	6	3.38	8
9...	3.45	4	3.61	6	3.65	8	28...	.....	.....	3.33	4	.....	.....
10...	.....	.....	3.37	5	3.45	7	May 2...	.....	.....	3.62	1	.....	.....
12...	.....	.....	3.30	6	3.41	4	11...	.....	.....	3.42	6	.....	.....

TABLE 19.—*Daily means by groups*—Continued.

	Group.		Group.		Group.	
	IV.	Wt.	V.	Wt.	VI.	Wt.
	″		″		″	
1914—May 15	.....	.....	3.44	4	3.37	6
16	3.34	6	3.36	7	3.43	8
17	3.33	6	3.36	7	3.38	8
18	3.45	6	3.44	7	3.32	8
19	3.44	6	3.16	6	3.30	6
20	3.43	6	.....	.....	.....	.....
21	3.28	6	3.23	6	3.29	6
24	3.28	2	.....	.....	.....	.....
25	.....	.....	3.31	2	3.45	5
26	3.33	3	3.23	6	3.35	8
30	3.39	3	3.27	7	3.33	8

	Group.		Group.		Group.	
	IV.	Wt.	V.	Wt.	VI.	Wt.
	″		″		″	
1914—May 31	3.34	2	3.30	8	3.30	8
June 2	3.32	2	3.33	7	3.29	8
7	.....	.....	3.21	4	3.33	7
11	.....	.....	3.35	4	.....	.....
13	.....	.....	3.30	5	.....	.....
15	.....	.....	3.33	4	.....	.....
16	.....	.....	3.24	8	3.33	6
17	.....	.....	3.20	8	3.22	7
19	.....	.....	3.30	8	3.26	8
20	.....	.....	3.14	3	.....	.....
24	.....	.....	3.28	4	.....	.....

	Group.		Group.		Group.	
	V.	Wt.	VI.	Wt.	VII.	Wt.
	″		″		″	
1914—June 29	3.16	6	3.29	6	3.23	7
30	3.35	6	3.20	7	.....	.....
July 2	3.26	5	.....	.....	.....	.....
3	3.15	7	3.10	5	.....	.....
5	3.24	7	2.99	4	.....	.....
11	3.25	3	.....	.....	.....	.....
12	3.27	5	3.36	1	.....	.....
15	3.16	4	3.22	7	3.25	10
16	.....	.....	3.20	7	3.16	12
17	3.22	5	3.13	5	3.20	12
18	3.17	2	3.11	6	.....	.....
19	3.06	5	3.28	7	3.17	12
20	3.20	4	3.16	8	3.21	11
21	3.21	5	3.22	7	3.18	12
30	.....	.....	3.13	5	3.07	8

	Group.		Group.		Group.	
	V.	Wt.	VI.	Wt.	VII.	Wt.
	″		″		″	
1914—July 31	.....	.....	3.09	3	3.14	11
Aug. 3	.....	.....	3.17	3	3.26	7
13	.....	.....	3.08	6	3.19	12
14	.....	.....	3.19	5	.....	.....
15	.....	.....	3.09	3	3.18	12
16	.....	.....	3.08	6	3.10	11
18	.....	.....	3.08	8	3.17	11
19	.....	.....	3.21	7	3.22	12
20	.....	.....	3.05	5	3.20	4
22	.....	.....	3.09	5	3.13	9
23	.....	.....	3.05	3	3.09	11
31	.....	.....	3.20	5	3.17	11
Sept. 1	.....	.....	3.28	4	3.16	10
2	.....	.....	3.17	5	.....	.....
4	.....	.....	3.03	8	3.16	11

	Group.		Group.		Group.	
	VI.	Wt.	VII.	Wt.	I.	Wt.
	″		″		″	
1914—Sept. 5	3.06	8	3.13	12	3.16	10
7	3.26	7	3.19	5	3.10	6
8	.....	.....	3.10	9	.....	.....
9	3.14	5	3.19	11	3.15	10
13	3.17	3	3.06	12	3.04	10
14	.....	.....	3.11	12	3.11	10
15	3.09	5	.....	.....	.....	.....
19	.....	.....	3.09	11	2.97	8
20	.....	.....	3.14	12	3.05	10
21	.....	.....	3.24	12	3.03	8
22	.....	.....	3.18	10	3.04	10
26	.....	.....	3.03	11	2.95	9
28	.....	.....	3.06	12	2.85	9
29	.....	.....	3.11	12	3.00	10

	Group.		Group.		Group.	
	VI.	Wt.	VII.	Wt.	I.	Wt.
	″		″		″	
1914—Sept. 30	.....	.....	3.12	11	2.98	9
Oct. 1	.....	.....	3.14	11	3.09	10
2	.....	.....	3.06	12	2.99	10
5	.....	.....	3.15	12	3.05	10
9	.....	.....	3.05	11	.....	.....
10	3.13	10	.....	.....	.....	.....
12	3.14	12	3.16	7	.....	.....
17	3.02	8	.....	.....	.....	.....
19	3.07	12	3.00	10	.....	.....
20	3.00	11	3.09	4	.....	.....
21	3.09	12	2.95	10	.....	.....
22	3.11	12	3.45	1	.....	.....
23	3.03	12	3.04	10	.....	.....

GROUP DIFFERENCES AND CLOSING SUM.

The error of the mean declination system of each group must now be determined. From the daily group means in the preceding table, the seven group differences are found by subtracting the means furnished by adjacent groups. Each night's observation gives one or more such difference, depending on the number of groups observed. In general, only two groups were observed on any one night. From the individual values thus found the mean yearly value of each group difference was formed, the separate or nightly values being weighted according to the formula

$$W = \frac{n_1 n_2}{n_1 + n_2},$$

where n_1 and n_2 are the number of separate observations in the groups whose difference is sought. The annual values of the group differences are given in the following table. The probable errors given were computed from the individual discordances, and weights assigned strictly in accord with them. F is the aberration factor for the corresponding group difference, computed from the actual values of the aberration after dividing by 20″.47.

TABLE 20.—*Group differences and closing sum.*

Group.	Limiting dates.	1911-12			1912-13			1913-14			1914			Mean.	
		D.	p. e.	Wt.	D.	p. e.	Wt.	D.	p. e.	Wt.	D.	p. e.	Wt.	D.	F.
		″	″		″	″		″	″		″	″		″	
VI-VII....	June 20-Sept. 13...	+0.036	0.025	16	+0.006	0.019	28	−0.012	0.010	100	−0.020	0.010	100	−0.010	+0.37
VII-I.....	Sept. 4-Nov. 5....	+ .033	.023	19	− .041	.016	39	+ .030	.010	100	+ .071	.012	69	+ .031	+ .53
I-II.....	Oct. 3-Jan. 7.....	− .011	.020	25	− .008	.016	39	− .016	.008	156	.....	.....	.....	− .014	+ .51
II-III.....	Nov. 16-Mar. 15...	− .022	.020	25	.000	.021	23	+ .052	.015	44	.....	.....	.....	+ .019	+ .31
III-IV.....	Jan. 19-Apr. 9.....	− .032	.030	11	− .048	.020	25	− .081	.016	39	.....	.....	.....	− .063	+ .60
IV-V.....	Mar. 30-June 2....	− .016	.022	21	+ .006	.012	69	+ .018	.014	51	.....	.....	.....	+ .008	+ .51
V-VI.....	May 2-July 27.....	− .004	.025	16	+ .003	.012	69	− .015	.013	59	.....	.....	.....	− .005	+ .33
Closing sum..	.....	″ − .016	.....	.....	″ − .082	.....	.....	″ − .024	.....	.....	.....	.....	.....	″ − .034	+3.16

From the weighted mean values of the group differences in the column "mean D" in this table the values of the required "group corrections" are obtainable. In computing them the usual practice of distributing the closing sum, −0″.034, equally among the seven group differences was followed. The result is practically the same as would have been obtained if the distribution had taken place in proportion to the aberration factors F. With a larger closing sum this would not be true. It is to be especially noted that neither method of distribution eliminates or causes the closing sum to vanish. *The closing sum remains unchanged in the corrected declinations.* There is thus an essential difference between the closing sum considered here and the closing sum in geodetic polygons, where the error disappears in the adjustment. The only way to eliminate it in our case is to compute a corrected aberration constant (p. 72) from the closing sum, and then correct each group mean in Table 19 for the difference between the assumed value of the aberration constant, 20″.47, and the computed value. On account of the small value of the aberration correction, +0″.011, found here, this method of correcting the observations would be a refinement hardly worth while.

Theoretically, the effect of merely distributing the closing sum among the group differences will be to produce an error in the Kimura term. With the larger correction to the aberration constant given by the visual instruments, the rigid procedure outlined above should be followed, in order to obtain a correct value of the Kimura term. In fact the writer showed (A. N. 4593) that if this process were followed the Kimura term would be 50 per cent larger than found by Albrecht. It was also shown in the same paper that the closing sum might be due to a motion of the air strata, progressive during the night, the difference in the rate of change from winter to summer producing the Kimura term itself.

If the closing sum were actually due to such a progressive shift of the air strata its value obtained from the two instruments, visual and photographic, would be identical. But a decided difference is shown, the closing sum for the visual instrument being seven times larger than that for the photographic. This hypothesis of a progressive shift of the air strata must accordingly be abandoned. And since the photographic results agree with the visual in disclosing the Kimura term (p. 79), the possibility of the latter being an accompanying phenomenon to the closing sum as hypothecated above must be dismissed.

Comparing the closing sums of visual and photographic instruments it can be concluded that—*The large closing sum in visual latitude observations is not due to an erroneous aberration constant or to systematic refraction effects, but is probably of instrumental origin.*

It is true that this conclusion may be disputed, but if the probabilities of the problem are duly weighed, any other conclusion is difficult to accept. For if not true, we must conclude the photographic results wrong, and in addition, the accepted constant of aberration to be in error, or else there exists a hypothetical refraction effect of obscure origin. It is true that Courvoisier[1] has discovered a displacement acting as a refraction which seriously affects astronomical observations, but the writer has shown in A. N. 4702 that in the form given by him it is without effect on the constant of aberration as determined by the observatories of the International Geodetic

[1] "Über systematische abweichungen der Sternpositionen im Sinne einer jährlichen Refraktion" von L. Courvoisier, Beobachtungs-Ergebnisse der königlichen Sternwarte zu Berlin, No. 15.

Association. In another paper (A. N. 4733) the writer gave some modifications of Courvoisier's refraction which would cause the closing sum in visual latitude observations to vanish. Thus the situation is very much complicated by our lack of knowledge of the exact form of the law of this anomalous refraction of Courvoisier's. Definitive results and conclusions seem at the present time to be out of the question.

TABLE 21.—*Concluded group corrections.*

Group.	Correction.	Group.	Correction.
	″		″
I	+0.019	V	−0.011
II	+ .010	VI	− .011
III	+ .034	VII	− .017
IV	− .024		

The final correction to the declination of each star is obtained by combining these corrections with those in Table 18. The results, $\Delta\delta$, are shown in the following table. These values were used in obtaining the final declinations D in Table 14.

TABLE 22.—*Final corrections to assumed declinations D_0.*

Group I.		Group II.		Group III.		Group IV.		Group V.		Group VI.		Group VII.	
Star.	$\Delta\delta$.	Star.	$\Delta\delta$.	Star.	$\Delta\delta$.	Star.	$\Delta\delta$.	Star.	$\Delta\delta$.	Star.	$\Delta\delta$.	Star.	$\Delta\delta$.
	″		″		″		″		″		″		″
1	−0.024	11	+0.012	21	+0.043	29	−0.052	35	−0.031	43	−0.034	51	−0.045
2	+ .032	12	+ .025	22	+ .033	30	− .016	36	+ .015	44	+ .017	52	− .004
3	+ .028	13	+ .012	23	− .015	31	+ .004	37	− .020	45	− .006	53	− .007
4	+ .009	14	+ .008	24	+ .045	32	+ .009	38	− .026	46	− .016	54	− .016
5	+ .048	15	+ .006	25	+ .057	33	− .012	39	− .014	47	+ .005	55	− .014
6	+ .047	16	− .002	26	+ .017	34	− .079	40	− .006	48	− .009	56	− .010
7	+ .019	17	+ .001	27	+ .052			41	− .001	49	− .042	57	− .032
8	+ .026	18	+ .013	28	+ .042			42	− .011	50	− .002	58	− .040
9	+ .008	19	+ .018									59	− .014
10	− .003	20	+ .008									60	+ .010
												61	− .007
												62	+ .018
												63	− .031

CONSTANT OF ABERRATION.

On the assumption that the closing sum is due to a faulty assumed constant of aberration, we have, using the values found in Table 20—

Aberration constant, $$K = 20''.470 + \frac{0''.034}{3.16},$$

$$\text{or } K = 20''.481 \pm 0''.004 \text{ (p. e.)}.$$

The probable error assigned to K is deduced from its yearly values, namely

Year.	K.
	″
1911-12	20.475
1912-13	20.496
1913-14	20.478

which were computed from the separate values of the closing sum given in Table 20.

SOLAR PARALLAX.

From the relation between the solar parallax, π, and the constant of aberration, K, given by Newcomb in "Astronomical Constants," page 147, is found from the above value of K,

$$\pi = 8''.799 \pm 0''.0017.$$

Effect of errors in the assumed proper motions upon the latitude and the constant of aberration.—From the values of the yearly group differences found in Table 20 there is evidence of an erroneous assumed proper motion of all the stars in Group III, or at least in their mean value. This is seen by a progressive increase in the values of II–III and corresponding decrease in the values of III–IV, proportional to the time. That there should exist a common error in the proper motions of all the stars of any one group is not surprising, considering the circumstance that they all lie in a restricted zone in declination and do not differ greatly in right ascension. Under such conditions the residual systematic errors of catalogues from which the proper motions are obtained are of importance.

The annual proper motion of Group III appears to be 0″.02 in error. The maximum effect of this error upon the final mean latitudes takes place during the winters of 1911 and 1913, when it amounts to 0″.01. This is small, and will accordingly be neglected. If the series of observations had covered a longer period than three years the effect of the error would have been more serious. But, on the other hand, with a longer series of observations, extending over six years, the errors in proper motion can be accurately determined and their effect therefore eliminated.

The injurious effect of errors of proper motion upon the closing sum and constant of aberration is more apparent than real, for only about one-sixth of the annual error of proper motion would appear in the closing sum. The error in the constant of aberration would be but one-twentieth that of the annual error in proper motion.

DAILY MEAN LATITUDES, DEFINITIVE.

The group corrections found above are now applied to the latitudes by groups given in Table 19, and the daily weighted means taken. The results are shown in Table 23 which follows. Combining the daily values of the latitude into monthly means, the values of the monthly mean latitude are found (Table 24). These monthly mean values are plotted (Plate P) and a smooth curve drawn through them. It is from this curve that the values ϕ_0 in the table immediately following are obtained. In the last column are given the differences v, where

$$v = \phi_0 - \phi_0.$$

The values of v furnish data for study of the "night error" (p. 122).

TABLE 23.—*Daily mean latitudes (photographic) and comparison with latitude curve.*

	No. stars.	ϕ_0	ϕ_0	v		No. stars.	ϕ_0	ϕ_0	v
		″	″	″			″	″	″
1911—June 9	8	3.31	.....	.....	1911—Oct. 18	23	3.41	3.41	0.00
15	4	3.15	.....	.....	23	16	3.35	3.40	− .05
18	2	3.36	.....	.....	24	11	3.37	3.40	− .03
20	10	3.65	3.41	+0.24	25	18	3.36	3.40	− .04
21	9	3.41	.....	.....	26	10	3.38	3.40	− .02
26	3	3.14	.....	.....	29	19	3.42	3.40	+ .02
27	12	3.34	3.43	− .09	Nov. 2	9	3.27	.....	.....
28	15	3.45	3.43	+ .02	3	14	3.48	3.39	+ .09
29	20	3.49	3.44	+ .05	7	13	3.34	3.38	− .04
30	18	3.48	3.44	+ .04	10	24	3.37	3.38	− .01
July 1	20	3.40	3.44	− .04	15	4	3.42	.....	.....
6	3	3.29	.....	.....	16	27	3.15	3.36	− .21
12	1	3.36	.....	.....	19	18	3.49	3.36	+ .13
14	9	3.47	.....	.....	22	14	3.46	3.35	+ .11
15	20	3.45	3.47	− .02	26	28	3.33	3.35	− .02
17	19	3.43	3.47	− .04	30	18	3.37	3.34	+ .03
20	8	3.51	.....	.....	Dec. 1	4	3.39	.....	.....
22	20	3.47	3.48	− .01	4	10	3.45	3.32	+ .13
24	18	3.43	3.48	− .05	5	20	3.40	3.32	+ .08
27	19	3.55	3.48	+ .07	6	20	3.25	3.32	− .07
28	2	3.43	.....	.....	7	28	3.29	3.31	− .02
31	17	3.47	3.48	− .01	8	7	3.14	.....	.....
Aug. 7	9	3.45	.....	.....	19	23	3.37	3.28	+ .09
8	6	3.63	.....	.....	28	17	3.42	3.24	+ .18
9	2	3.50	.....	.....	1912—Jan. 7	8	3.23	.....	.....
10	15	3.58	3.48	+ .10	9	13	3.16	3.19	− .03
Sept. 30	12	3.49	3.44	+ .05	13	11	3.19	3.17	+ .02
Oct. 5	6	3.54	.....	.....	16	13	3.12	3.16	− .04
6	9	3.44	.....	.....	19	23	3.14	3.14	.00
11	7	3.39	.....	.....	21	23	3.16	3.13	+ .03
12	10	3.48	3.42	+ .06	22	22	3.14	3.13	+ .01
16	10	3.44	3.41	+ .03	24	20	3.21	3.12	+ .09

TABLE 23.—*Daily mean latitudes (photographic) and comparison with latitude curve*—Continued.

	No. stars.	ϕ_o	ϕ_o	v
		″	″	″
1912—Jan. 27	16	3.00	3.11	−0.11
Feb. 4	22	3.01	3.10	− .09
5	13	2.97	3.10	− .13
6	23	3.14	3.09	+ .05
8	18	3.18	3.09	+ .09
9	10	2.99	3.09	− .10
13	13	3.12	3.09	+ .03
23	18	3.07	3.10	− .03
27	20	3.18	3.10	+ .08
28	20	3.22	3.10	+ .12
Mar. 7	12	3.03	3.11	− .08
10	18	3.06	3.11	− .05
13	10	3.15	3.11	+ .04
16	14	3.01	3.12	− .11
17	14	3.07	3.12	− .05
22	10	3.17	3.12	+ .05
25	12	3.07	3.13	− .06
26	8	2.86	.....	.....
30	14	3.18	3.13	+ .05
31	6	3.01	.....	.....
Apr. 3	17	3.27	3.14	+ .13
8	6	3.03	.....	.....
9	8	2.96	.....	.....
10	12	3.23	3.14	+ .09
11	14	3.22	3.14	+ .08
19	7	3.28	.....	.....
23	8	3.11	.....	.....
27	14	3.20	3.16	+ .04
May 1	12	3.11	3.16	− .05
2	14	3.18	3.16	+ .02
3	12	3.13	3.17	− .04
4	21	3.14	3.17	− .03
9	21	3.18	3.17	+ .01
10	18	3.19	3.17	+ .02
13	4	3.21	.....	.....
18	16	3.13	3.18	− .05
20	16	3.16	3.18	− .02
26	14	3.28	3.19	+ .09
27	18	3.15	3.19	− .04
30	14	3.12	3.20	− .08
31	15	3.20	3.20	.00
June 1	16	3.14	3.20	− .06
8	12	3.09	3.20	− .11
9	10	3.14	3.21	− .07
10	14	3.23	3.21	+ .02
13	2	3.19	.....	.....
20	21	3.27	3.22	+ .05
July 2	22	3.22	3.23	− .01
3	24	3.24	3.24	.00
5	19	3.22	3.24	− .02
7	19	3.31	3.24	+ .07
8	14	3.22	3.24	− .02
19	8	3.17	.....	.....
22	10	3.26	3.26	.00
26	12	3.28	3.27	+ .01
27	17	3.28	3.27	+ .01
Aug. 3	2	3.43	.....	.....
4	18	3.33	3.29	+ .04
5	6	3.24	.....	.....
12	10	3.30	3.30	.00
15	6	3.37	.....	.....
20	6	3.24	.....	.....
23	10	3.20	3.32	− .12
24	10	3.34	3.32	+ .02
27	5	3.14	.....	.....
29	10	3.33	3.33	.00
31	4	3.39	.....	.....
Sept. 5	10	3.38	3.35	+ .03
6	23	3.37	3.35	+ .02
8	14	3.34	3.36	− .02
9	22	3.35	3.36	− .01
10	26	3.33	3.37	− .04
12	18	3.34	3.37	− .03
14	2	3.22	.....	.....
17	6	3.36	.....	.....
20	16	3.51	3.39	+ .12
28	12	3.27	3.42	− .15
30	21	3.48	3.42	+ .06
Oct. 1	22	3.61	3.44	+ .17
2	20	3.54	3.44	+ .10
3	8	3.44	.....	.....
4	22	3.41	3.45	− .04
5	22	3.52	3.45	+ .07
6	22	3.50	3.46	+ .04
7	22	3.46	3.46	.00
9	6	3.41	.....	.....
10	5	3.31	.....	.....
14	11	3.47	3.49	− .02
15	20	3.48	3.49	− .01
16	22	3.44	3.49	− .05
20	22	3.59	3.50	+ .09
21	6	3.45	.....	.....
26	22	3.51	3.51	.00
27	22	3.53	3.51	+ .02
28	12	3.40	3.52	− .03
29	22	3.43	3.52	− .09
30	22	3.46	3.52	− .06

	No. stars.	ϕ_o	ϕ_o	v
		″	″	″
1912—Nov. 3	10	3.67	3.53	+0.14
10	14	3.71	3.54	+ .17
11	20	3.44	3.54	− .10
14	12	3.49	3.54	− .05
16	20	3.61	3.55	+ .06
18	20	3.54	3.55	− .01
19	12	3.52	3.55	− .03
20	20	3.54	3.55	− .01
22	20	3.55	3.55	.00
25	6	3.58	.....	.....
26	10	3.57	3.55	+ .02
30	28	3.55	3.56	− .01
Dec. 3	18	3.50	3.56	− .06
6	6	3.45	.....	.....
9	28	3.63	3.56	+ .07
12	28	3.66	3.56	+ .10
13	18	3.52	3.56	− .04
14	18	3.57	3.56	+ .01
15	16	3.49	3.56	− .07
20	20	3.57	3.56	+ .01
21	22	3.55	3.55	.00
22	10	3.52	3.55	− .03
24	4	3.43	.....	.....
28	26	3.52	3.54	− .02
1913—Jan. 4	13	3.40	3.54	− .14
9	8	3.51	.....	.....
13	17	3.55	3.51	+ .04
14	17	3.63	3.51	+ .12
15	4	3.56	.....	.....
18	10	3.38	3.49	− .11
21	18	3.51	3.49	+ .02
22	8	3.52	.....	.....
25	6	3.43	.....	.....
26	6	3.42	.....	.....
30	6	3.38	.....	.....
Feb. 1	18	3.52	3.45	+ .07
2	4	3.42	.....	.....
4	18	3.45	3.43	+ .02
5	4	3.50	.....	.....
6	18	3.37	3.43	− .06
7	8	3.37	.....	.....
8	20	3.28	3.41	− .13
12	22	3.41	3.40	+ .01
13	18	3.43	3.40	+ .03
14	14	3.37	3.40	− .03
18	18	3.38	3.39	− .01
23	8	3.27	.....	.....
25	18	3.38	3.36	+ .02
28	14	3.39	3.36	+ .03
Mar. 2	18	3.33	3.34	− .01
5	14	3.38	3.34	+ .04
6	8	3.33	.....	.....
7	10	3.30	3.34	− .04
11	6	3.19	.....	.....
12	4	3.25	.....	.....
17	14	3.32	3.31	+ .01
18	14	3.27	3.30	− .03
20	14	3.36	3.30	+ .06
22	14	3.28	3.30	− .02
27	6	3.36	.....	.....
28	4	3.24	.....	.....
31	12	3.17	3.27	− .10
Apr. 1	8	3.32	.....	.....
5	5	3.50	.....	.....
6	8	3.22	.....	.....
8	10	3.25	3.25	.00
17	14	3.28	3.23	+ .05
18	2	3.59	.....	.....
19	10	3.38	3.22	+ .16
20	9	3.22	.....	.....
21	14	3.32	3.22	+ .10
22	8	3.24	.....	.....
24	12	3.17	3.21	− .04
25	12	3.20	3.21	− .01
29	11	3.29	3.20	+ .09
30	14	3.19	3.20	− .01
May 1	14	3.24	3.19	+ .05
2	12	3.26	3.19	+ .07
3	8	3.34	.....	.....
8	18	3.19	3.17	+ .02
10	14	3.22	3.17	+ .05
11	14	3.15	3.17	− .02
19	7	3.19	.....	.....
20	12	3.19	3.15	+ .04
24	18	3.13	3.15	− .02
31	16	3.22	3.13	+ .09
June 2	13	3.07	3.13	− .06
5	16	3.08	3.13	− .05
6	6	3.05	.....	.....
9	16	3.14	3.12	+ .02
13	10	3.15	3.12	+ .03
16	4	3.09	.....	.....
17	10	3.29	3.11	+ .18
18	16	3.10	3.11	− .01
28	7	3.34	.....	.....
29	20	3.10	3.10	.00
30	24	3.03	3.10	− .07

TABLE 23.—*Daily mean latitudes (photographic) and comparison with latitude curve*—Continued.

	No. stars.	ϕ_o	ϕ_c	v
		″	″	″
1913—July 3	24	3.02	3.10	−0.08
6	4	3.08	.....	.....
7	22	3.12	3.10	+ .02
8	18	3.12	3.10	+ .02
10	8	3.08	.....	.....
11	3	3.13	.....	.....
13	4	3.22	.....	.....
14	4	3.14	.....	.....
16	18	3.07	3.09	− .02
18	16	3.16	3.09	+ .07
21	24	3.10	3.09	+ .01
22	10	3.11	3.09	+ .02
25	16	3.12	3.09	+ .03
26	20	3.08	3.09	− .01
Aug. 2	20	3.08	3.09	− .01
4	18	3.05	3.09	− .04
5	16	3.11	3.09	+ .02
7	20	3.08	3.09	− .01
11	9	3.00	.....	.....
14	9	3.07	.....	.....
15	20	3.07	3.09	− .02
16	20	3.05	3.09	− .04
19	10	3.15	3.09	+ .06
20	20	3.06	3.09	− .03
21	20	3.09	3.09	.00
24	14	3.09	3.09	.00
25	20	3.07	3.09	− .02
26	8	3.10	.....	.....
Sept. 4	20	3.11	3.11	.00
5	22	3.07	3.11	− .04
9	22	3.20	3.11	+ .09
10	15	3.04	3.12	− .08
11	10	3.11	3.12	− .01
22	22	3.15	3.14	+ .01
23	20	3.15	3.14	+ .01
24	20	3.20	3.14	+ .06
25	22	3.14	3.14	.00
27	17	3.17	3.15	+ .02
28	12	3.11	3.15	− .04
Oct. 3	24	3.17	3.17	.00
4	26	3.15	3.17	− .02
12	12	3.15	3.18	− .03
13	26	3.24	3.18	+ .06
14	26	3.27	3.18	+ .09
16	18	3.18	3.19	− .01
22	26	3.19	3.20	− .01
26	21	3.20	3.21	− .01
27	8	3.21	.....	.....
29	6	3.17	.....	.....
Nov. 1	28	3.21	3.22	− .01
3	2	3.14	.....	.....
4	28	3.27	3.23	+ .04
5	16	3.16	3.23	− .07
6	20	3.21	3.24	− .03
17	20	3.25	3.25	.00
21	20	3.26	3.26	.00
22	20	3.24	3.26	− .02
Dec. 5	28	3.29	3.29	.00
9	22	3.33	3.30	+ .03
11	28	3.31	3.30	+ .01
12	10	3.33	3.30	+ .03
13	26	3.25	3.31	− .06
15	23	3.32	3.31	+ .01
18	26	3.36	3.31	+ .05
19	27	3.33	3.31	+ .02
22	2	3.47	.....	.....
27	18	3.24	3.32	− .08
29	28	3.31	3.33	− .02
1914—Jan. 1	8	3.38	.....	.....
6	16	3.38	3.34	+ .04
11	16	3.27	3.34	− .07
14	2	3.10	.....	.....
18	4	3.24	.....	.....
25	4	3.43	.....	.....
26	6	3.31	.....	.....
29	18	3.41	3.36	+ .05
Feb. 1	17	3.38	3.37	+ .01
2	15	3.44	3.37	+ .07
7	8	3.30	.....	.....
8	22	3.47	3.37	+ .10
9	17	3.30	3.37	− .07
11	18	3.36	3.38	− .02
15	8	3.25	.....	.....
16	20	3.39	3.38	+ .01
17	18	3.44	3.38	+ .06
21	20	3.39	3.38	+ .01
24	14	3.24	3.38	− .14
26	20	3.42	3.38	+ .04
Mar. 3	5	3.46	.....	.....
8	20	3.37	3.38	− .01
10	9	3.31	.....	.....
12	16	3.39	3.38	+ .01
13	17	3.41	3.39	+ .02
14	5	3.45	.....	.....
15	17	3.35	3.39	− .04
20	11	3.25	3.39	− .14
1914—Mar. 22	7	3.28	.....	.....
24	14	3.34	3.39	−0.05
Apr. 3	18	3.35	3.39	− .04
5	19	3.35	3.38	− .03
6	9	3.43	.....	.....
9	18	3.59	3.38	+ .21
10	12	3.40	3.38	+ .02
12	10	3.33	3.38	− .05
13	14	3.37	3.38	− .01
17	14	3.45	3.38	+ .07
18	8	3.44	.....	.....
21	10	3.41	3.38	+ .03
23	9	3.38	.....	.....
27	14	3.37	3.37	.00
28	4	3.31	.....	.....
May 2	1	3.60	.....	.....
11	6	3.40	.....	.....
15	10	3.39	3.34	+ .05
16	21	3.37	3.33	+ .04
17	21	3.35	3.33	+ .02
18	21	3.38	3.33	+ .05
19	18	3.29	3.33	− .04
20	6	3.41	.....	.....
21	18	3.25	3.32	− .07
24	2	3.26	.....	.....
25	7	3.40	.....	.....
26	17	3.29	3.31	− .02
30	18	3.30	3.30	.00
31	18	3.29	3.29	.00
June 2	17	3.30	3.29	+ .01
7	11	3.28	3.28	.00
11	4	3.34	.....	.....
13	5	3.29	.....	.....
15	4	3.32	.....	.....
16	14	3.27	3.25	+ .02
17	15	3.20	3.25	− .05
19	16	3.27	3.24	+ .03
20	3	3.13	.....	.....
24	4	3.27	.....	.....
29	19	3.21	3.22	− .01
30	13	3.25	3.22	+ .03
July 2	5	3.25	.....	.....
3	12	3.12	3.21	− .09
5	11	3.14	3.20	− .06
11	3	3.24	.....	.....
12	6	3.28	.....	.....
15	21	3.21	3.18	+ .03
16	19	3.16	3.18	− .02
17	22	3.17	3.18	− .01
18	8	3.11	.....	.....
19	24	3.16	3.17	− .01
20	23	3.18	3.17	+ .01
21	24	3.18	3.17	+ .01
30	13	3.08	3.16	− .08
31	14	3.10	3.16	− .06
Aug. 3	10	3.22	3.15	+ .07
13	18	3.14	3.14	.00
14	5	3.18	.....	.....
15	15	3.14	3.13	+ .01
16	17	3.08	3.13	− .05
18	19	3.12	3.13	− .01
19	19	3.20	3.13	+ .07
20	9	3.10	.....	.....
22	14	3.10	3.13	− .03
23	14	3.06	3.13	− .07
31	16	3.16	3.11	+ .05
Sept. 1	14	3.18	3.11	+ .07
2	5	3.16	.....	.....
4	19	3.09	3.11	− .02
5	30	3.12	3.11	+ .01
7	18	3.18	3.10	+ .08
8	9	3.08	.....	.....
9	26	3.16	3.10	+ .06
13	25	3.06	3.09	− .03
14	22	3.11	3.09	+ .02
15	5	3.08	.....	.....
19	19	3.04	3.08	− .04
20	22	3.10	3.08	+ .02
21	20	3.15	3.08	+ .07
22	20	3.11	3.08	+ .03
26	20	2.99	3.07	− .08
28	21	2.97	3.07	− .10
29	22	3.06	3.07	− .01
30	20	3.06	3.07	− .01
Oct. 1	21	3.12	3.06	+ .06
2	22	3.03	3.06	− .03
5	22	8.10	3.06	+ .04
9	11	3.03	3.05	− .02
10	10	3.11	3.05	+ .06
12	19	3.14	3.05	+ .09
17	8	3.00	.....	.....
19	22	3.04	3.04	.00
20	15	3.01	3.04	− .03
21	22	3.03	3.03	.00
22	13	3.12	3.03	+ .09
23	22	3.03	3.03	.00

From the daily means in this table weighted monthly means are now to be formed. For this the limiting dates are chosen identical with those adopted by Albrecht in his reduction of the visual observations. The results are exhibited in the following table:

TABLE 24.—*Mean monthly latitudes, photographic.*

$\phi = 39° 8' 10''+$

Limiting dates.	Mean date.	T.	Number nights.	Number observations.	Mean ϕ.
		y			"
1911—June 9-July 6	June 26	0.484	12	124	3.424
July 12-Aug. 10	July 26	.564	14	165	3.484
Sept. 30-Oct. 29	Oct. 19	.797	12	151	3.413
Nov. 2-Dec. 1	Nov. 17	.878	11	173	3.353
Dec. 4-Jan. 7	Dec. 13	.948	8	123	3.335
1912—Jan. 9-Jan. 27	Jan. 20	.053	8	141	3.141
Feb. 4-Feb. 23	Feb. 10	.109	7	117	3.077
Feb. 27-Mar. 17	Mar. 8	.183	7	108	3.112
Mar. 22-Apr. 11	Apr. 3	.253	10	107	3.134
Apr. 19-May 10	May 3	.338	9	127	3.167
May 13-June 8	May 28	.404	9	125	3.161
June 9-July 8	June 29	.492	9	145	3.238
July 19-Aug. 23	Aug. 4	.591	11	105	3.276
Aug. 24-Sept. 20	Sept. 8	.688	13	166	3.357
Sept. 28-Oct. 30	Oct. 14	.785	21	363	3.482
Nov. 3-Dec. 6	Nov. 21	.889	14	216	3.549
Dec. 9-Jan. 4	Dec. 19	.965	11	203	3.555
1913—Jan. 9-Jan. 30	Jan. 19	.050	10	100	3.509
Feb. 1-Feb. 23	Feb. 10	.112	12	170	3.396
Feb. 25-Mar. 20	Mar. 8	.184	11	134	3.333
Mar. 22—Apr. 19	Apr. 5	.261	11	93	3.294
Apr. 20—May 8	Apr. 29	.325	11	132	3.237
May 10—June 9	May 27	.401	10	132	3.147
June 13—July 8	June 29	.493	11	159	3.107
July 10—Aug. 11	July 27	.567	15	206	3.093
Aug. 14—Sept. 22	Aug. 30	.661	15	252	3.096
Sept. 23—Oct. 22	Oct. 6	.764	12	249	3.187
Oct. 26—Dec. 5	Nov. 11	.863	12	217	3.233
Dec. 9—Dec. 29	Dec. 18	.963	10	210	3.311
1914—Jan. 1—Feb. 2	Jan. 21	.057	10	106	3.364
Feb. 7—Feb. 24	Feb. 15	.124	9	145	3.367
Feb. 26—Mar. 20	Mar. 10	.188	9	120	3.375
Mar. 22—Apr. 13	Apr. 6	.261	9	121	3.392
Apr. 17—May 16	May 1	.330	10	97	3.396
May 17—June 7	May 25	.396	12	174	3.314
June 11—July 5	June 24	.479	13	125	3.225
July 11—Aug. 13	July 23	.557	13	205	3.165
Aug. 14—Sept. 22	Sept. 5	.677	23	382	3.119
Sept. 26—Oct. 23	Oct. 9	.772	16	290	3.052

COMPARISON OF THE PHOTOGRAPHIC VARIATION OF LATITUDE CURVE WITH THE NORMAL CURVE.

In the Astronomische Nachrichten, provisional values of the motion of the pole, and the Kimura term, computed from the observations of the six latitude stations of the International Geodetic Association, are published annually. Values of x, y, and z are given for each tenth of a year, from which the latitude variation at any station in longitude λ west from Greenwich can be computed by the formula

$$\delta\varphi = x \cos \lambda + y \sin \lambda + z. \qquad (1)$$

The values of $\delta\varphi$ computed by this formula for any station will be called the "normal" values, and the connecting curve the "normal curve." The normal curve will be noted by V_n.

It is now necessary to compare the observed photographic curve with the normal. But the normal curve V_n was computed from the visual observations at Gaithersburg, in conjunction with those of the five remaining stations. Manifestly the comparison proposed should be made with a normal curve in which the photographic results for Gaithersburg should take the place of the visual. This new normal curve, in which the photographic results have been substituted for the visual, will be denoted by the symbol V_n'. It is obtained from V_n in the following way:

Let V_v denote the visual variation of latitude of Gaithersburg from which V_n has been computed; let V_p denote the photographic variation of latitude. It is easy to show from the formulae and values given in "Resultate" Bd. 3, page 222, that any assumed change Δ in the variation of latitude for Gaithersburg produces a change in the "normal" variation for the same station of

$$\delta V_n = +0.359\,\Delta. \qquad (2)$$

Putting $\Delta = V_p - V_v$, δV_n is computed from (2), whence $V_n' = V_n + \delta V_n$, the photographic normal curve, is obtained.

A few remarks are necessary on the visual latitude variation V_v from which the normal curve was computed. In deriving these variations not all the visual observations have been used, as explained by Dr. Albrecht in the numbers of the Nachrichten cited below. Again, there is the question as to whether it is not really better to compute the variation for each station independently of that of the others. Both of these difficulties are overcome in the closing section of the present memoir, in which a new V_v is computed rigidly from all the data at hand (p. 120).

In the following table are collected the photographic latitudes with the resultant variation curve, and the visual and normal curves. These latter were obtained from the tables of Dr. Albrecht in A. N. Nos. 4588, 4665, and 4749. The values for 1914 were kindly sent in advance of publication by Dr. Helmert. At this writing only results up to 1914.5 are at hand.

TABLE 25.—*Comparison of photographic and normal variation of latitude.*

Epoch.	ϕ_p	V_p	V_v	V_n	$V_p - V_v$	V'_n	$V_p - V'_n$	$V_v - V_n$
	″	″	″	″	″	″	″	″
1911.5	3.44	+0.25	+0.27	+0.27	−0.02	+0.26	−0.01	0.00
.6	.49	+ .30	+ .33	+ .34	− .03	+ .33	− .03	− .01
.7	.46	+ .27	+ .30	+ .31	− .03	+ .30	− .03	− .01
.8	.41	+ .22	+ .22	+ .22	.00	+ .22	.00	.00
.9	.35	+ .16	+ .12	+ .13	+ .04	+ .14	+ .02	− .01
1912.0	.23	+ .04	+ .03	+ .03	+ .01	+ .03	+ .01	.00
.1	.10	− .09	− .06	− .07	− .03	− .08	− .01	+ .01
.2	.12	− .07	− .11	− .12	+ .04	− .11	+ .04	+ .01
.3	.15	− .04	− .14	− .13	+ .10	− .09	+ .05	− .01
.4	.19	.00	− .11	− .09	+ .11	− .05	+ .05	− .02
.5	.24	+ .05	+ .03	+ .05	+ .02	+ .06	− .01	− .02
.6	.29	+ .10	+ .15	+ .16	− .05	+ .14	− .04	− .01
.7	.37	+ .18	+ .21	+ .21	− .03	+ .20	− .02	.00
.8	.50	+ .31	+ .23	+ .23	+ .08	+ .26	+ .05	.00
.9	.55	+ .36	+ .22	+ .22	+ .14	+ .27	+ .09	.00
1913.0	.54	+ .35	+ .20	+ .20	+ .15	+ .25	+ .10	.00
.1	.43	+ .24	+ .19	+ .17	+ .05	+ .19	+ .05	+ .02
.2	.32	+ .13	+ .13	+ .11	.00	+ .11	+ .02	+ .02
.3	.23	+ .04	.00	+ .02	+ .04	+ .03	+ .01	− .02
.4	.15	− .04	− .08	− .04	+ .04	− .03	− .01	− .04
.5	.10	− .09	− .09	− .05	.00	− .05	− .04	− .04
.6	.09	− .10	− .06	− .04	− .04	− .05	− .05	− .02
.7	.12	− .07	− .03	− .01	− .04	− .02	− .05	− .02
.8	.20	+ .01	+ .01	+ .04	.00	+ .04	− .03	− .03
.9	.27	+ .08	+ .08	+ .11	.00	+ .11	− .03	− .03
1914.0	.33	+ .14	+ .14	+ .19	.00	+ .19	− .05	− .05
.1	.37	+ .18	+ .20	+ .26	− .02	+ .25	− .07	− .06
.2	.39	+ .20	+ .26	+ .31	− .06	+ .29	− .09	− .05
.3	.38	+ .19	+ .24	+ .25	− .05	+ .23	− .04	− .01
.4	.31	+ .12	+ .11	+ .15	+ .01	+ .15	− .03	− .04
.5	.22	+ .03	+ .01	+ .09	+ .02	+ .10	− .07	− .08
.6	.15	− .04	.....	.....	.....	.....	.....	.....
.7	.10	− .09	.....	.....	.....	.....	.....	.....
.8	3.04	− .15	.....	.....	.....	.....	.....	.....

In the table above ϕ_p is obtained from the smooth curve drawn through the monthly means given in Table 24. (See Plate P.)

The derivation of the photographic variation of latitude V_p from the numbers in the preceding column must now be explained. To obtain the *variation* of latitude the mean latitude must be known, to derive which involves difficulties. In order to obtain an accurate mean latitude, a longer period of observations than that covered in the present series is necessary. However, such accurate mean latitude is not essential in computing the coordinates of the polar motion, since it can be shown that any constant error in the variation, such as is produced by an erroneous mean latitude, only produces a shift in position of the variation curve without altering in any way its form or dimensions. This is true regardless of whether the polar motion is obtained from observations at only two or from any number of observatories. When the curve connecting the polar coordinates has been drawn, it may happen that the x's and y's used in its construction may not be the values which should be used in computing the normal variation for any station. This will be the case if the origin of coordinates actually used does not coincide with the *center* of the curve, the center being supposed obtained from a seven-year period of the curve by a least square adjustment. Such a change of origin will be found

necessary if the adopted mean latitude for any of the observatories whose observations are used in computing the curve is in error.

Mean photographic latitude.—The mean of the photographic latitudes in Table 25 up to and including 1914.5 is

$$\phi'_m = 39° \ 8' \ 13''.301$$

The mean value of the normal variation for the same period, given in the table, is $+0''.114$, showing that the *average* latitude for this period is greater than the true mean latitude by $0''.114$. Applying this correction to ϕ'_m, the photographic mean latitude is found to be

$$\phi_m = 39° \ 8' \ 13.''187 \text{ (photographic)}$$

The photographic variation of latitude V_p, given in the third column of the above table, is now obtained by subtracting ϕ_m from the numbers in the second column.

The last two columns in Table 25 give the deviations of the observed photographic and visual curves from their respective normal curves. They show that during 1913 and 1914 a disturbance of some magnitude had been affecting observations with both instruments, acting in the same direction and by the same amounts. This is a fact of no little importance. The effect is so pronounced as to leave no doubt of the reality of the phenomenon. These deviations of the true or observed from the normal curve I will call "fluctuations" in the latitude, borrowing a term used by Newcomb in describing the unexplained pseudo-periodic terms in the moon's longitude. They can be defined as follows:

"*Latitude fluctuations*" are changes in the latitude of any station which can not be explained as a motion of the polar axis or as a Kimura term. As far as our present knowledge goes their periods are from several months to more than a year in duration.

The most pronounced case of fluctuation hitherto observed is to be found in the latitudes of Cincinnati and Gaithersburg for 1904. (See "Resultate" Bd. 3, Tafel II.) A maximum fluctuation of $0''.13$ was there found at Gaithersburg and $0''.11$ at Cincinnati.

It has always been a question as to the origin or even the reality of such fluctuations in the latitude. The following may be advanced as explanations of their origin: (*a*) long period refraction anomalies caused by a "set" of the isobaric layers of the atmosphere; (*b*) changes in personal equation; (*c*) instrumental origin; (*d*) actual changes in the direction of gravity; (*e*) refractions within the observing room; (*f*) purely residual errors, due to a chance grouping of the errors of observation.

The fact just proven, namely that the two instruments, visual and photographic, agree on the extended fluctuation of 1913–14 at Gaithersburg eliminates nearly all of the possible explanations (*a*) to (*f*) just given. Cause (*d*) is inherently improbable, requiring impossible shifts of matter in the interior of the earth. Moreover, the shifted material would have to be supposed to return to its original position, since the fluctuations are periodic.

We are left with (*a*) as the only explanation of the latitude fluctuations which fits all the facts observed. The result thus found can be condensed into the following statement: *Long period fluctuations appear at times in the latitude at any station, which are caused by refraction anomalies, or long continued "sets" in the isobaric layers of the atmosphere.*

This phenomenon is to be considered in connection with the Kimura term, which is now to be investigated. It leads to a reasonable and unforced explanation of the latter.

THE KIMURA TERM.

Historically the Kimura or z term arose in the following way: It was found by Dr. Kimura that if a constant z was introduced into the equations of condition for the latitude variation at any one epoch a better representation of the observations could be secured. Moreover, the succession of values of z thus found was continuous and appeared simply periodic. From the results of observation of the first six years at the stations of the International Geodetic Association the z term appeared to be of annual period with constant amplitude, expressible

in the form $z = a \sin (L + A)$, where L is the sun's longitude; but results since 1905 do not bear out this simple character of z, as Kimura has recently shown (A. N. 4774).

It is now in order to investigate the photographic results for a possible Kimura term, which was one of the main objects of this series of observations. The values of z since 1911.5, taken from the numbers of the Nachrichten cited above, are given in the following table, the 1914 values being communicated by Dr. Helmert. These values bear out Dr. Kimura's statement of the complexity of z, at least apparently. But this should not be accepted unreservedly. All that is proved is that z is subject to irregularities or "fluctuations." Now it is easy to show that a fluctuation in the latitude of any one of the six stations from which z is computed produces a corresponding fluctuation of smaller amplitude in z. These fluctuations in the latitude have just been shown to exist, so it follows that fluctuations must exist also in the Kimura or z term. If the local fluctuations at several stations should happen to be in the right direction for a combined effect, a very large fluctuation of z, amounting perhaps to 100 per cent, might result. If, for example, the very large fluctuations for Cincinnati and Gaithersburg in 1904 cited above should have happened to be in the same direction, instead of in opposite, a large fluctuation in z would have resulted. But the irregularities neutralized each other at every point, so that the Kimura term remained unaffected in this instance.

The following table contains the data and computations bearing on the question of the existence of the z term furnished by the visual and photographic instruments:

TABLE 26.—*Investigation of the Kimura term.*

Epoch.	z.	M ($V_n - z$).	M′ ($V'_n - z$).	E_v ($V_v - M$).	E_p ($V_p - M'$).	Epoch.	z.	M ($V_n - z$).	M′ ($V'_n - z$).	E_v ($V_v - M$).	E_p ($V_p - M'$).	Epoch.	z.	M ($V_n - z$).	M′ ($V'_n - z$).	E_v ($V_v - M$).	E_p ($V_p - M'$).
	″	″	″	″	″		″	″	″	″	″		″	″	″	″	″
1911.5	−0.01	+0.28	+0.27	−0.01	−0.02	1912.6	+0.03	+0.13	+0.11	+0.02	−0.01	1913.7	+0.05	−0.06	−0.07	+0.03	0.00
.6	− .01	+ .35	+ .34	− .02	− .04	.7	+ .05	+ .16	+ .15	+ .05	+ .03	.8	+ .07	− .03	− .03	+ .04	+ .04
.7	− .01	+ .32	+ .31	− .02	− .04	.8	+ .04	+ .19	+ .22	+ .04	+ .09	.9	+ .08	+ .03	+ .03	+ .05	+ .05
.8	.00	+ .22	+ .22	.00	.00	.9	+ .02	+ .20	+ .25	+ .02	+ .11	1914.0	+ .09	+ .10	+ .10	+ .04	+ .04
.9	+ .04	+ .09	+ .10	+ .03	+ .06	1913.0	+ .03	+ .17	+ .22	+ .03	+ .13	.1	+ .10	+ .16	+ .15	+ .04	+ .03
1912.0	+ .06	− .03	− .03	+ .06	+ .07	.1	+ .04	+ .13	+ .15	+ .06	+ .09	.2	+ .10	+ .21	+ .19	+ .05	+ .01
.1	+ .05	− .12	− .13	+ .06	+ .04	.2	+ .03	+ .08	+ .08	+ .05	+ .05	.3	+ .06	+ .19	+ .17	+ .05	+ .02
.2	+ .03	− .15	− .14	+ .04	+ .07	.3	.00	+ .02	+ .03	− .02	+ .01	.4	+ .01	+ .14	+ .14	− .03	− .02
.3	− .01	− .12	− .08	− .02	+ .04	.4	− .01	− .03	− .02	− .05	− .02	.5	+ .01	+ .08	+ .09	− .07	− .06
.4	− .03	− .06	− .02	− .05	+ .02	.5	.00	− .05	− .05	− .04	− .04						
.5	.00	+ .05	+ .06	− .02	− .01	.6	+ .03	− .07	− .08	+ .01	− .02						

The columns M and M′ are the normal curves of visual and photographic instruments respectively with the z term withdrawn. It is then a question as to how closely the M curves satisfy the observations with the two instruments. The results are shown in columns E_v and E_p, which give the residual errors for visual and photographic instruments respectively. The pronounced periodicity shown in these columns, taken in conjunction with their close agreement, is ample proof of the reality of the Kimura term. Grouping the values of E according to seasons, we have the following mean results for the three years, up to 1914.5:

	E_v.	E_p.
Summer (0.4, 0.5, 0.6)	−0″.026	−0″.022
Winter (0.9, 0.0, 0.1)	+ .043	+ .069
Difference	0″.069	0″.091

Increasing these differences by 15 per cent to correct for phase, it is seen that the photographic instrument shows the presence of a Kimura term of 0″.105 amplitude, as compared with an amplitude of 0″.079 shown by the visual instrument. For definitive results, see page 121.

It is thus proved that whatever the cause of the Kimura term, *it acts upon the impersonal photographic instrument equally with the visual.*

The following have been put forward by various investigators as explanations of this term: (*a*) Motion of the center of gravity of the earth within the earth; (*b*) errors in the nutation terms of annual period used in the ephemerides; (*c*) error in the Oppolzer terms of the polar motion (A. N. 4593); (*d*) stellar parallax; (*e*) error in the method of reduction, a result

of a possibly erroneous treatment of the closing sum (A. N. 4630); (*f*) seasonal personal equation; (*g*) seasonal instrumental effect; (*h*) seasonal refraction effect.

That the Kimura term is due to a seasonal personal equation or is of instrumental origin is now barred from consideration in view of the above findings. This is a result of no little importance, since (*f*) and (*g*) formed plausible explanations which could not be lightly turned aside.

A portion of the Kimura term of unknown amount may be due to (*e*), since there is no question but that the usual method of division of the closing sum is mathematically defective and affects the Kimura term correspondingly. This is demonstrable, and can not be dismissed from consideration until the mystery of the closing sum is cleared.

About one-third of the Kimura term is undoubtedly due to (*d*). There are no data on the hypotheses (*a*) to (*c*). There remains for discussion only (*h*) therefore, or the seasonal refraction effect.

Seasonal refraction as a cause of the Kimura term.—The only assumption involved in imagining the Kimura term to be a refraction effect is of a relative "set" of the air layers from summer to winter. Now this is an extremely reasonable assumption in view of what has already been found. It has been shown on page 78 that there are local long-continued "sets" in the atmosphere, whose effect is reflected in the Kimura term, causing fluctuations in its value. The facts are brought into harmony by hypothecating a seasonal "set," from summer to winter, producing the Kimura term. Variations from regularity of the general seasonal "set" produce the local fluctuations in the latitude, just proved to exist. There is nothing forced in supposing these irregularities to be present, being in keeping with the known variability of average seasonal and climatic conditions.

Concluding remarks.—The abnormally high value of the latitude given by the photographic instrument during the winter of 1912–13 is worthy of note. The smoothness of the curve during this period precludes any explanation as of accidental origin. Since the anomaly is in the same direction as the Kimura term, it is evident that the cause producing the Kimura term, whatever it may be, was especially active with the photographic instrument during this period. The abnormality, however, may be due merely to the then unsatisfactory installation of the instrument, which defect was remedied in February, 1913. The small value of the residual $V_p - V'_n$ for 1913.2 lends color to this explanation; but the definitive reduction of the visual observations (Plate P) shows a corresponding abnormality, although somewhat smaller, so that it is probable we have here another instance of "fluctuations."

Beginning with 1913.2 it is found from a comparison of the columns V_p—V'_n and V_v—V_n in Table 25 that the average difference between the visual and photographic curves is only 0″.016, which is remarkably small, considering the fundamental differences in the two instruments.

DISCUSSION OF ERRORS.

PROBABLE ERRORS.

The accidental probable error of a single zenith distance, or of a value of the latitude derived from a "single" star, as well as the probable error of a latitude derived from a "pair" of stars, has been obtained for each of the seven groups of stars separately for each year. The effect of seasonal conditions can thus be noted, as well as the effect of changes and improvements in the instrument.

The "accidental probable error" is commonly taken as that part of the probable error of a latitude which is left when all systematic errors are subtracted. Some of these systematic errors are: Errors of declination, latitude variation, night error, and errors of scale value. The accidental probable error is denoted in the following table by e_2 when applied to the latitude from one star, and by e_1 when applied to a "pair" of stars.

It will not be out of place to recall here how the accidental probable error is computed. Let a group of n stars be observed completely (no stars missing) on m nights. Form the differences d between the mean latitude of the group and the individual latitudes from each star for each night. Compute r, the average value of the d's, for each star separately. r is commonly known as the declination correction (p. 64). Finally, form the residuals v, where

$$v = r - d.$$

The required probable error is then given by the formula

$$e = \pm 0.674 \sqrt{\frac{\Sigma v^2}{(m-1)\,(n-1)}},$$

which is applicable to either e_1 or e_2.

It was not planned at the start to observe the stars in pairs, since the latitude is completely determined from an observation of a single star. In the course of the work, however, the first two of the following reasons developed for considering the star "pair" as the unit of latitude:

(*a*) It was found that the latitude results were subject to errors of considerable size, such as would be produced by large and sudden changes in scale value. If the unit latitude is taken as that resulting from a pair of stars, one north and one south of the zenith at nearly equal distances, this error disappears. It was not until October, 1912, that the disturbance was traced to its true source, film distortion, and eliminated (p. 42).

(*b*) Comparison of the accidental probable errors of the visual and photographic instruments was considered useful to determine their relative efficiency. On account of the existence of a systematic error in each star due to atmospheric disturbances (p. 93), the visual instrument has an undue advantage over the photographic, in that its unit determination rests upon two stars, compared with one for the photographic. In order that the relative accuracy may be strictly comparable, star pairs must be taken as the unit in both cases.

(*c*) Observations of common pairs (p. 97) formed part of the program of work outlined for the instruments. These stars can only be observed in pairs with the visual instrument, so that it is the natural unit to select.

Table 27 exhibits the values obtained for the accidental probable errors, e_1 and e_2 for each group, using the formula given above. They are divided into the three periods A, B, and C, beginning respectively June 9, 1911, March 22, 1912, and February 6, 1913: See further on.

TABLE 27.—*Accidental probable errors of an individual latitude.*

Period A.				Period B.				Period C.			
Group.	Number of nights.	e_1.	e_2.	Group.	Number of nights.	e_1.	e_2.	Group.	Number of nights.	e_1.	e_2.
		″	″			″	″			″	″
1911—I	13	±0.072	±0.153	1912—V	19	±0.088	±0.160	1913—III (Feb. 6)	10	±0.062	±0.119
1911-12—II	11	.085	.168	VI	10	.064	.128	IV	23	.062	.098
III	14	.092	.150	VII	20	.081	.147	V	14	.067	.102
1912—IV	25	.110	.173	No film distortion from this point on.				VI	20	.062	.085
								VII	25	.053	.070
								I	26	.054	.085
				1912—I	21	.083	.114	1913-14—II	15	.071	.096
				1912-13—II	18	.089	.133	III	18	.058	.090
				III (to Feb. 8).	10	.086	.137	1914—IV	24	.075	.100
								V	9	.065	.099
								VI	12	.065	.096
								VII	22	.045	.078
								I	13	.076	.111
Mean [1]		± .091	± .161			± .083	± .137			± .060	± .090
e_2/e_1		1.77				1.65				1.50	

[1] In forming the weighted mean the number of stars in each group has been taken into consideration.

The diminution of the ratio $e_2 : e_1$ shown in this table is due to the elimination of film distortion. We conclude that for the instrument in its final improved form,

Mean accidental probable error of a single pair ..... ±0″.060.

TEMPERATURE CONDITIONS.

The temperatures of the instrument, observing room, and external air were recorded in general twice each evening, near the middle of each star group. Weather conditions were likewise recorded. The barometer was not read. It is not considered necessary to give here the individual readings. In the following table the monthly mean temperatures are given, which are sufficient to show the temperature conditions prevailing.

In Period A, the internal temperature t_i was occasionally read both north and south of the tube at the same level. An appreciable difference was generally found, amounting at times to 0°.5 in a horizontal distance of 5 feet. This indicates a harmful tilting of the air strata in the observing room. Chiefly for this reason the small roof opening was discarded, and the large opening, including practically the entire roof of the building, was devised, and used for the first time on March 22, 1912. The change proved advantageous, at least in improving temperature conditions. Not only did the north-south difference in temperature entirely vanish, but the difference between t_o and t_i disappeared as well The temperature of the upper observing room, t_i, was accordingly not recorded after this date, it being assumed equal to t_o, the external temperature.

On February 6, 1913, a portion of the wooden observing floor 8 feet square was removed and replaced by an iron grating. (See Plate G.) This date marks the beginning of Period C.

TABLE 28.—*Mean monthly temperatures.*

[t_o= temperature of air, external; t_i= temperature of air, internal, above observing floor; t_b= temperature of air, internal, below observing floor; T_a= temperature of tube near top; T_b= temperature of tube at mercury basin.]

Month.	t_o.	t_i.	t_b.	T_a.	T_b.	Month.	t_o.	t_i.	t_b.	T_a.	T_b.
	°	°	°	°	°		°	°	°	°	°
1911—June	+21.0	+21.3	+20.1	+22.3	+20.3	1913—Mar.	+1.1	Same as t_o.	+1.9	+1.9	+3.0
July	20.1	21.0	21.2	22.6	21.7	Apr.	8.0		8.4	8.7	9.5
Aug.-Sept.	16.6	17.3	18.0	18.8	18.9	May	12.3		12.1	12.7	13.0
Oct.	11.2	11.8	12.7	13.0	13.9	June	18.1		18.4	18.9	19.6
Nov.	3.7	4.3	5.0	5.4	6.4	July	19.3		19.9	21.1	21.3
Dec.	1.7	2.1	2.4	2.5	3.8	Aug.	18.5		19.0	20.6	20.7
1912—Jan.	− 2.0	− 1.5	− 1.4	− 0.5	− 0.1	Sept.	13.3		13.7	14.9	15.5
Feb.	− 4.8	− 4.0	− 2.7	− 2.9	− 1.5	Oct.	10.9		11.3	12.5	12.9
Mar.	+ 2.5	+ 3.0	+ 2.8	+ 4.0	+ 3.2	Nov.	7.6		7.9	9.2	9.5
Apr.	6.2	Same as t_o.	7.1	6.5	8.0	Dec.	1.9		2.3	3.1	3.5
May	13.8		14.2	14.0	14.8	1914—Jan.	+0.2		+0.6	+0.8	+1.3
June	14.6		15.6	15.1	16.5	Feb.	−4.0		−3.4	−2.7	−2.2
July	19.1		19.7	20.2	20.8	Mar.	+0.7		+0.8	+1.9	+1.8
Aug.	17.5		18.7	19.0	19.9	Apr.	+5.9		6.6	7.5	7.5
Sept.	19.7		19.7	21.1	20.5	May	16.4		16.6	18.5	17.6
Oct.[1]	12.1		13.0	14.1	14.3	June	17.4		17.8	19.4	19.1
Nov.	+ 4.9		5.3	4.5	6.8	July	20.3		20.7	22.2	21.8
Dec.	− 0.3		+ 0.7	+ 0.3	+ 2.3	Aug.	22.1		22.3	23.9	23.5
1913—Jan.	+ 0.3		+ 1.4	+ 0.9	+ 2.7	Sept.	15.3		15.7	17.2	17.4
Feb.	− 3.0		− 2.1	− 2.4	− 1.2	Oct.	14.0		14.4	15.6	16.2

[1] Small opening used Sept. 30 to Oct. 28 while repairing main rolling roof.

TABLE 29.—*Means by seasons.*

Period.		Season.	t_o.	t_t.	t_b.	T_a.	T_b.
			°	°	°	°	°
A	1..	1911—June-Sept	19.2	19.9	19.8	21.2	20.3
	2..	Oct.-Mar	2.1	2.6	3.1	3.6	4.3
B	3..	1912—Apr.-Sept	15.1	.....	15.8	16.0	16.7
	4..	Oct.-Jan	4.2	.....	5.1	5.0	6.5
C	5..	1913—Feb.-Sept	11.0	.....	11.4	12.1	12.7
	6..	Oct.-Mar	2.9	.....	3.2	4.1	4.5
	7..	1914—Apr.-Sept	16.2	.....	16.6	18.1	17.8

Study of temperature conditions.—It has been remarked above that in Periods B and C (after March 22, 1912) the temperature conditions in the upper part of the observing room (above the floor) leave nothing to be desired. However in Period B the mean temperature of the air below the observing floor is seen to be 0°.75 higher than that of the external air. This difference drops to 0°.3 after the observing floor has been removed. (Period C.)

Increasing the size of roof opening (beginning Period B) resulted in bringing the temperature of the upper part of the tube more nearly in accord with that of the external air. However it has not diminished the temperature gradient $T_a - T_b$ of the tube itself.

Removing the observing floor (beginning Period C) has brought about a considerable dimunition of the temperature gradient of the tube, it being reduced from 1°.1 to 0°.4.

Effect of temperature conditions upon observation.—The superiority of the latitude results secured in Period C over those in Periods A and B has already been shown in Table 27. The sudden drop in the probable error of one pair beginning with February 6, 1913, is a well marked phenomenon. The conclusion is almost irresistible that the improvement is a result of improved temperature conditions. If this is true, we should find that on those nights when temperature differences were exceptionally large the observations would prove discordant; that on those nights when temperature differences were exceptionally small the observations would be better than the average. A study of the observations on this basis has accordingly been made. Period C has been selected for the first examination. The following classes of extreme conditions have been chosen:

(*a*) All temperature differences small (less than 0°.5).

(*b*) Temperature gradient of tube small.

(*c*) Temperature of the top of tube nearly the same as that of the external air, but temperature gradient of tube large (2° or more).

(*d*) Temperature of top of tube differing from external air by 2° or more, and temperature gradient of tube large.

All star groups which were completely observed (no stars missing) and which fell in any one of the classes (*a*) to (*d*) were included in the study. The probable error of a latitude pair, computed from these chosen groups, was taken as the criterion of the effect of the corresponding temperature conditions. As a further check criterion the difference between the mean latitude given by the group in question, corrected for declination error, and the final latitude curve, *v*, was also formed. The mean results are collected in the following table:

TABLE 30.—*Study of extreme temperature conditions.*

Class.	Number of groups.	Mean temperature.				P. e. one pair.	Mean (+*v*).	ΔC.
		t_o.	t_b.	T_a.	T_b.			
		°	°	°	°	″	″	″
a	11	14.4	14.3	14.8	14.8	±0.059	0.058	+0.033
b	36	12.2	12.7	14.6	14.7	.053	.040	.000
c	13	2.1	2.9	2.3	4.1	.064	.040	− .003
d	15	8.2	9.0	10.4	[1] 8.4 12.4	.078	.058	− .003

[1] Individually in class d, T_b always differed by 2° from T_a, but the difference was as often negative as positive.

The last column in the above table is the algebraic mean excess of the latitude over that given by the curve and is a measure of the systematic effect of the corresponding abnormal conditions.

The column "probable error of one pair" shows no superiority of results in class (*a*), representing ideal temperature conditions, over results in classes (*b*) to (*d*), corresponding to very poor temperature conditions.

The columns mean $(+v)$ and ΔC show similarly no superiority of (*a*) over (*b*) to (*d*). The large value of ΔC in class (*a*) is surprising. This may be only an accidental result, since the number of groups included in this class is comparatively small. If however we admit it to be real, we must conclude that the average and abnormally bad temperature conditions produce a systematic error of $-0''.033$ in the latitudes, but the evidence supporting this conclusion is of too weak a character to allow its acceptance by the writer.

It is to be concluded from the numbers in the table above that adverse temperature conditions are without effect upon the latitude results.

In Periods A and B there are a great many nights during which the temperature inequalities were extreme, far exceeding in amount any considered above. The night of January 13, 1912, was the coldest in many years, the minimum reaching $-23^\circ.0$ C. The temperature readings at the middle of the observed groups on this date were as follows:

Sid. time.	t_o.	t_n.	t_s.	T_a.	T_b.
h	°	°	°	°	°
4.2	−19.4	−17.0	−17.5	−15.1	−11.0
8.3	−20.0	−17.5	−18.0	−16.6	−11.5

In spite of the enormous temperature inequalities shown here, the probable error of one latitude pair for this night was only $\pm 0''.053$, which is much less than the average for Period A. The value of v (night error) is $+0''.02$, which is also a great deal less than its mean value.

The temperature conditions for Group IV, February 4, 1912, were also unusually bad, with

$$t_o = -14^\circ.1,\ T_a = -11^\circ.5,\ T_b = -7^\circ.3.$$

Probable error one pair $\pm 0''.061$; $v = -0''.04$.

Several other nights in which the temperature gradient of the tube amounted to 4° were similarly examined. As in the case of the two nights above, nothing abnormal was discovered.

During October, 1912, the small roof opening was used. Examination of the latitude curve (Plate P) shows no systematic effect, the mean latitude for this month falling smoothly on the general curve.

On December 5 and 9, 1913, on account of an accident to the main roof the small opening was used. The following are the values of the probable error for one pair and the night error, v, for these dates:

	P. E. (one pair).	v.
	″	″
1913—Dec. 5.....	±0.086	0.00
Dec. 9.....	± .076	+ .03
Mean.....	± .081	+ .015

The mean p. e. of one pair for Groups I and II, 1913, are $\pm 0''.054$ and $\pm 0''.071$, respectively (p. 82). The use of the small roof has clearly increased the accidental errors of observation, but from the values of v no systematic error is noticeable.

We are forced to the conclusion that unfavorable temperature conditions in the observatory and tube are without unfavorable influence upon the latitudes. The pronounced improvement in the observations in Period C must therefore be due to some other circumstance than temperature conditions. The sand-box support of the mercury basin was not discarded until

April 18, 1913, being then replaced by the iron stand shown in Plate A, so that the improvement could not wholly be due to it. The new plate holders, shown in Plate E, were first used February 23, 1913. It is inconceivable that they could have influenced the quality of the observations to any great extent. Moreover, the improvement is sharply shown from February 6.

Finally summarized, we conclude that the changes in roof and floor *in some unknown way* has produced a notable diminution in the accidental errors of observation; that the use of the small roof produces no systematic error; and that adverse temperature conditions in observatory and tube in themselves produce no harmful effect in either a systematic or accidental sense.

PROBABLE ERRORS ARRANGED ACCORDING TO ZENITH DISTANCE.

To determine if there is any advantage in using stars of small over stars of large zenith distance, all the stars of the program were divided into three groups according to their zenith distance. The squared residual, v^2 (p. 81), is taken as the measure of accuracy of each group. The following table shows the results of the comparison. Only observations since February 1913 (Period C), were used:

TABLE 31.—*Probable errors arranged according to zenith distance.*

Group.	Zenith distance.	Number of stars.	Average v^2.
	′ ′		″
I.....	0 to 3	25	0.0134
II.....	3 to 6	18	.0184
III.....	6 to 10	16	.0142

It is surprising that the intermediate stars (3′–6′) are subject to the largest errors. That this is an accidental result seems probable. We conclude that the accuracy of the latitudes is practically the same for stars of all zenith distances.

PROBABLE ERROR OF THE DAILY MEAN LATITUDE.

In comparing the relative efficiency of the visual and photographic instruments, it is important to determine the probable error of one night's mean latitude as found by each. This can be done by comparing the night mean with the smooth curve drawn through the monthly means. The result of this comparison is shown in the following table. Only nights containing 10 or more individual latitudes were used, this number being considered sufficient to give a value of the latitude which for that night is representative of the performance of the instrument and the mean condition of the atmosphere.

The difference between the curve and the night mean is called v (Table 23). The quantity Σv^2 was formed for extended periods, generally three months. n is the number of nights in each period. The probable error in question is

$$E_n = \pm 0.674\sqrt{\frac{\Sigma v^2}{n}}$$

This assumes tacitly that the comparison curve is not subject to error, which strictly is not true. But the error of the curve, aside from its possible systematic deviation, is small in comparison with the error E_n, having a value not far from 0″.01, the exact amount of which being difficult to determine. However, in order not to be misunderstood, it should be specified that by E_n we mean simply the measure numerically of the deviations of the night mean from the smooth curve which is determined by the instrument itself. The question of the systematic error of the curve, an extremely difficult one, is thus avoided. For a comparative study of the performance of different instruments, and of the same instrument at different epochs, the function E_n is useful,

TABLE 32.—*Values of E_n.*

Period.	n.	Σv^2.	$\frac{\Sigma v^2}{n}$.	E_n.
		″	″	″
1911—June 20-Oct. 29	22	0.1042	0.00474	±0.046
Nov. 3-Mar. 17	36	.2707	752	59
1912—Mar. 22-July 27	32	.0960	300	37
Aug. 4-Oct. 20	24	.1193	497	48
Oct. 26-Feb. 4	34	.1591	468	46
1913—Feb. 6-Apr. 30	24	.0901	375	41
May 1-July 26	25	.0796	318	38
Aug. 2-Oct. 26	30	.0444	148	26
Nov. 1-Jan. 29	20	.0322	161	27
1914—Feb. 1-Apr. 27	25	.1250	500	48
May 15-July 31	26	.0422	162	27
Aug. 3-Oct. 23	35	.0891	255	34

Study of the table clearly shows the superior performance of the instrument in 1913–14. For these years the mean value of E_n is 0″.034, as compared with 0″.047 for 1911–12. A similar superiority was shown by the probable errors of the individual latitudes (Table 27).

The table also shows the superiority of the summer results. For 1913–14 the mean summer value is 0″.021; the mean winter value 0″.037.

RELATIVE ACCURACY OF OBSERVATIONS BEFORE AND AFTER MIDNIGHT.

The question arises, is there a difference in accuracy of observations made before and after midnight? Again, are observations made just after sunset or before sunrise less accurate than those near midnight?

To answer these questions, the probable errors of a single zenith distance were examined, beginning with Group IV, 1913. In general, each group had been observed during a period of about four months of each year. The value of the average v^2 for each group was obtained for the first half and second half of this four-month period separately, or for periods roughly after and before midnight. The results are shown in the following table, v^2 given being the average value per star:

TABLE 33.—*v^2 before and after midnight.*

Group.	Before midnight.	After midnight.	Group.	Before midnight.	After midnight.
	″	″		″	″
1913—IV	0.0168	0.0202	1914—IV	0.0157	0.0197
V	.0145	.0324	V	.0199	.0144
VI	.0113	.0171	VI	.0222	.0105
VII	.0112	.0110	VII	.0106	.0130
1913-14—I	.0134	.0142	I	.0211	.0244
II	.0186	.0163			
III	.0162	.0165	Mean	.0160	.0175

It is thus seen that the average v^2 before midnight is less in 8 cases out of 12 and is moreover 10 per cent less in the general mean. Notwithstanding this it can not be concluded that there is any real difference in accuracy of the two periods. If there is such difference however it should be accentuated in a comparison of the observations taken just after sunset and before sunrise. Observations during these periods will accordingly be examined.

To obtain the necessary data for observations near sunset, it will suffice to obtain the average v^2 for the last two or three nights on which the complete group was observed. The results are tabulated in the following table, in which the difference V between the mean latitude resulting from the group and the curve (called v in Table 23) is also given:

TABLE 34.—*Examination of observations near sunset.*

Group.	Date.	Average v^2.	V.	Group.	Date.	Average v^2.	V.	Group.	Date.	Average v^2.	V.
		″	″			″	″			″	″
IV	1913—May 20	0.0057	+0.06	I	1914—Jan. 6	0.0126	+0.01	IV	1914—May 18	0.0107	+0.10
V	June 30	.0203	− .12	II	29	.0259	+ .02	V	June 16	.0111	− .02
	July 3	.0098	− .11		Feb. 1	.0204	+ .14		17	.0133	− .06
VI	Aug. 21	.0088	+ .02		2	.0155	+ .08		19	.0505	+ .05
	25	.0150	.00	III	Mar. 13	.0028	− .03	VI	Sept. 4	.0461	− .09
	26	.0174	+ .01		15	.0076	− .06		5	.0116	− .06
VII	Oct. 16	.0065	− .04		24	.0154	− .09	VII	Oct. 21	.0324	+ .04
	22	.0018	− .03	IV	May 16	.0071	− .01		22	.0062	+ .06
I	Dec. 29	.0185	− .09		17	.0152	− .02		23	.0043	− .02

From this table results:

$$\text{Average } v^2 = \quad 0''.0153$$
$$E_n \text{ (night error)} = \pm 0''.044$$
$$\text{Mean V} = -0''.010$$

The average v^2 for "sunset" observations is seen to be smaller than the general value in Table 32, leading to the conclusion that atmospheric conditions during the period extending from one to three hours after sunset are even better than later in evening.

The column V in this table furnishes data for a study of systematic errors in "sunset" observations. The values of E_n, computed from the v's, is seen to be larger than its general value, $\pm 0''.034$, Table 32; but since it depends upon only one-half as many stars as the general value quoted we should expect it to be larger by about 40 per cent. In reality it is but 30 per cent greater, so that here again is found an apparent superiority.

The early morning or "sunrise" observations will now be considered. The first two or three nights on which each complete group was observed were chosen as representative of results to be expected near sunrise. The following table contains the material thus collected:

TABLE 35.—*Examination of observations near sunrise.*

Group.	Date.	Average v^2.	V.	Group.	Date.	Average v^2.	V.	Group.	Date.	Average v^2.	V.
		″	″			″	″			″	″
IV....	1913—Feb. 12.....	0.0278	+0.09	I.....	1913—Sept. 9.....	0.0153	+ .06	V.....	1914—Apr. 5.....	0.0119	−0.09
	13.....	.0160	+ .03	II.....	Nov. 1.....	.0359	+ .04		9.....	.0350	+ .26
V.....	Apr. 8.....	.0784	+ .03		4.....	.0117	+ .02		13.....	.0009	+ .02
	17.....	.0178	+ .01		6.....	.0071	− .03	VI.....	May 16.....	.0108	+ .09
	21.....	.0206	+ .11	III....	Dec. 5.....	.0134	− .04		17.....	.0133	+ .04
VI....	May 11.....	.0279	− .04		11.....	.0151	− .04		18.....	.0105	− .02
	24.....	.0290	− .02		13.....	.0218	− .16	VII....	July 16.....	.0077	− .04
VII..	July 7.....	.0284	+ .03	IV.....	1914—Feb. 8.....	.0130	+ .22		17.....	.0083	.00
	8.....	.0070	+ .02		11.....	.0035	+ .02				
I.....	Sept. 5.....	.0277	− .08		16.....	.0280	+ .07				

From the above table is obtained:

$$\text{Average } v^2 = \quad 0''.0195$$
$$E_n \text{ (night error)} = \pm 0''.058$$
$$\text{Mean V} = +0''.021$$

Comparing with Table 34, a decided inferiority to the "sunset" observations is here shown. From the results of Tables 33 to 35 it would appear to be well established that the period directly after sunset is the choicest part of the night. That this is so is not unreasonable. An equilibrium between the temperature of earth and air must be reached very soon after sunset. After that the strong refrigeration effect of radiation and dew deposition must produce atmospheric disturbances acting with increasing intensity until sunrise.

The fact that mean V near sunset is negative and positive near sunrise is of some interest. It can be interpreted as a systematic and progressive increase of the latitude during the evening. Assuming that the adopted constant of aberration is not in need of correction, the visual observations at all the latitude stations of the International Geodetic Association show that an increase of the latitude during the night takes place at the rate of $0''.009$ per hour. Assuming six hours as the difference in time of the above "evening" and "morning" observations, the corresponding increase of the latitude per hour is seen to be $0''.005$. A more accurate result for the photographic instrument is found by dividing by 24 the mean closing sum, page 71. The result is $0''.0014$, or only one-seventh that given by the visual instrument. The significance of these results is treated in connection with the constant of aberration on page 71.

SYSTEMATIC AND ACCIDENTAL ERRORS IN PLATE MEASUREMENT.

For the study of systematic and accidental errors in measuring the plates, Group 7 of September 4, 1913, was chosen for measurement. The seeing on this night was average and the range in magnitude of the stars considerable. Only one-half of the stars (clamp south) on the plate were measured, this number being deemed sufficient for the study proposed,

The plate was measured twice at intervals of about one week by each of the three observers, E. Jarboe, C. A. Mourhess, and the writer. The usual practice has been to make but one setting on each image. In the present case however two settings were made for the purpose of more clearly developing the differences of a systematic nature should such exist. Following the usual practice the plate was measured in two positions, right and left, at each setting. The table which follows contains the computed latitudes resulting from the six series of measures.

TABLE 36.—*Latitudes resulting from the measures of J., M., and R.*

Star.	Zenith distance.	Diameter of image.	J_1.	J_2.	M_1.	M_2.	R_1.	R_2.	Probable error of single ϕ.
	″	*mm.*	″	″	″	″	″	″	″
76.....	S. 44	0.080	2.98	2.96	3.06	3.04	3.05	3.03	±0.027
77.....	S. 13	.121	3.12	3.12	3.14	3.13	3.09	3.07	.017
78.....	S. 90	[1] .047	3.10	3.05	3.11	3.09	3.09	3.07	.015
79.....	N. 543	.126	3.06	3.03	3.06	2.99	2.97	3.05	.026
80.....	N. 163	.105	3.06	3.06	3.00	3.03	3.01	3.05	.017
80a.....	N. 186	.141	3.10	3.09	3.06	3.02	2.98	3.04	.032
81.....	S. 444	.072	2.95	2.92	3.06	3.04	3.08	3.02	.042
7A.....	S. 523	[1] .035	3.08	2.89	3.01	3.04	3.02	2.94	.046
7B.....	S. 487	.093	3.18	3.17	3.29	3.24	3.28	3.25	.033
Mean.....			3.070	3.032	3.088	3.069	3.063	3.058	.028
Mean of south stars.....			3.068	3.018	3.112	3.097	3.102	3.063	.....
Mean of north stars.....			3.073	3.060	3.040	3.013	2.987	3.047	.....

[1] Exceedingly faint and diffuse; 7A is especially difficult to measure.

The last column in this table contains the probable error of a single latitude, computed from the divergence of the preceding six separate values from their mean. It therefore includes the errors of personality as well as the accidental errors of measurement. Reducing the mean value, $\pm 0''.028$, to its value for a latitude pair by dividing by $\sqrt{2}$, we conclude—

Probable error of a latitude pair, errors of measurement alone considered.. $\pm 0''.020$

Systematic errors.—The following are the mean latitudes, arranged according to observers, obtained from the above table:

Observer.	Mean ϕ.
J.	3″.051
M.	3″.078
R.	3″.061

It should be noted that only three of the nine stars measured are north of the zenith. If all the stars of this plate had been measured, an equal number north and south would have been obtained. In fact the program of each group is chosen to include an equal number of stars of the two kinds. From Table 36 it is seen that the latitudes obtained by the observer J. for the south stars are appreciably smaller than those obtained by the other observers, while her north stars give a larger value. This shows that J. measures all distances on the plate systematically too small. The effect of this is to give a smaller mean latitude on account of the preponderance of south stars. If only the first six stars, omitting 78, are included, which gives an equal number north and south, the following mean values are obtained:

Observer.	Mean ϕ.
J.	3″.038
M.	3″.052
R.	3″.037

These show better agreement, the differences between the three observers being no larger than one would expect from the accidental errors of measurement.

In order to corroborate the indications of the above test measurements, an additional plate was measured by the observers J. and R., with results shown in the following table. Only one bisection of each image was made.

TABLE 37.—*Latitudes resulting from the measures of J. and R. (plate of Aug. 15, 1913).*

Star.	Zenith distance.	J_1.	J_2.	R.	Star.	Zenith distance.	J_1.	J_2.	R.	Star.	Zenith distance.	J_1.	J_2.	R.
	″	″	″	″		″	″	″	″		″	″	″	″
71.....	S. 23	3.12	3.08	3.17	76.....	S. 50	3.03	2.99	3.01	81.....	S. 450	3.03	3.02	3.07
72.....	N. 270	3.00	2.94	2.98	77.....	S. 19	3.09	3.07	3.08					
72a.....	N. 148	3.17	3.09	3.12	78.....	S. 96	3.03	3.18	3.13	Mean		3.077	3.064	3.073
73.....	N. 139	3.05	3.00	3.10	79.....	N. 537	3.03	3.04	3.02	Mean of south stars .		3.070	3.078	3.093
74.....	N. 112	3.09	3.10	2.99	80.....	N. 157	3.10	3.09	3.09	Mean of north stars .		3.083	3.051	3.056
75.....	S. 378	3.12	3.13	3.10	80a.....	N. 180	3.14	3.10	3.09					

Here again is found an agreement between J. and R. in the grand mean of north and south stars, the difference being only 0″.003. As in Table 36, however, a personality is shown in the results from the north and south stars separately, although much smaller in magnitude.

The mean differences of the observers are collected in the following table:

TABLE 38.—*Personality in plate measurement.*

Plate.	Observers.	South stars.	North stars.	Mean.
		″	″	″
1913—Sept. 4.....	M-R.	+0.022	+0.010	+0.016
4.....	M-J.	+ .062	− .039	+ .011
4.....	R-J.	+ .040	− .049	− .005
Aug. 14.....	R-J.	+ .019	− .011	+ .004

We conclude that there is a personality in measuring the plates which is without effect on the mean latitude for any group of stars of which an equal number are situated north and south of the zenith. Even if the number of stars of each kind are not exactly equal, the mean effect of the error in question is so small as to be negligible.

Discordance between plate left and plate right.—It is well known that there is a class of systematic discordance in measuring plates which appears to be eliminated by measuring it in two positions, direct and reversed, or by using a reversing prism in the eyepiece of the comparator. Naturally there is always a difference between results of measuring plates in the two positions, due merely to errors of measurement; but if these differences persist upon a second measurement they can be considered to be systematic errors of the kind here considered. The data necessary for this study are found in the double measurement of the plate of Table 36, made by each of the three observers. The number of times the difference between plate left and plate right had the same sign in the two measurements was counted, likewise the number of times the difference was of opposite signs. The results were as follows:

Observer.	Number of cases.		
	Same sign.	Opposite sign.	One or both equal.
J.....	8	1	0
M.....	4	4	1
R.....	2	5	2

A pronounced personality is thus shown by J., but not by M. or R. This personality of J. had been noted by the writer on several occasions. Cases which came up in the course of the work in which J.'s plate right and left differences seemed unusually large were measured by R., without such differences appearing. But the mean of J.'s plate left and right was invariably found to be very close to R.'s mean, proving that this very peculiar personal equation, which can be called "orientation personality," is eliminated by measuring the plate in its two positions. This is in accord with results found by previous investigators.

The mean differences for the three observers between measurement plate left and plate right, without regard to sign, are as follows: The differences given are the mean of 18 individual values.

Observer.	Mean difference (plate left minus plate right).
J.	0.0047 mm.
M.	.0021
R.	.0022

The large value of the mean difference for J. is due to the orientation personality just considered.

It is to be noted that the measurements under discussion here are the means of the three distances between the six images of each star measured in pairs. The orientation personality in measuring the distance between a single pair of images should accordingly be larger than the values found above. It may very well be that there is a small orientation personality in the measurements of M. and R., which has been masked in taking the mean of the three distances upon which the above study is based.

PROBABLE ERROR OF THE PHOTOGRAPHIC IMPRESSION OF STELLAR IMAGES.

If two or more stars having the same approximate right ascension are within the range of the instrument, refraction and instrumental errors are eliminated from the *difference* of the latitudes computed from these stars. Since the only remaining errors are those of the photographic impression of the image, film distortion, and errors of measurement, a study of the differences in question will give a good determination of these three errors combined.

Two pairs of stars having the same approximate right ascension are included in the regular observing program, called A and B, as follows:

Pair.	Stars.	Difference in α.	Difference in δ.
		s	″
A.....	52, 53	2.40	120
B.....	61, 62	0.11	22

Pair A is observed at its mean right ascension, so that each star is in error $1^s.2$. This does not affect the latitudes sensibly, if the orientation is correct (p. 32).

The differences between the latitudes computed for each star of pairs A and B were formed for each year. The probable error of a single difference was then determined by comparing the individual differences with the yearly mean. The results are shown in Table 39.

TABLE 39.—*Probable error of differences in latitude, and mean differences.*

Year.	Pair A.			Pair B.		
	Mean difference ϕ (52–53).	Number of observations.	P. e., one difference.	Mean difference ϕ (61–62).	Number of observations.	P. e., one difference.
	″		″	″		″
1911.....	−0.024	27	±(0.118)	+0.004	22	±0.053
1912.....	− .004	41	(.109)	− .010	25	.050
1913.....	− .028	40	.075	− .021	42	.047
1914.....	+ .010	44	.075	− .030	36	.055
Mean.....	− .010	.....	± .075	− .017	.....	± .051

The mean difference of pair B shows a steady progression, indicating either that the assumed relative proper motion (Boss's) is in error, or that there is an orbital motion of one or both components. This pair is the quadruple star 8 Lacertæ.

The result just found suggests a possibility of detecting orbital motion in stars which is too small to be detected with the meridian circle. It is not necessary that the stars be

components of pairs, as A and B above. The precision of the determination of declinations (see Table 18, p. 64), is such that the detection of orbital motion having a radius of but 0''.10 is possible. A motion as small as this is beyond the power of meridian circles. Examination of the yearly values of the declinations, as tabulated in Table 18, but covering a greater period of time than in the present instance, should lead to a list of suspected objects which could be studied in detail with powerful photographic equatorials.

In Table 39 above, the probable errors of pair A for 1911–12 are excluded on account of film distortion. The components of B are so close that film distortion is without effect in these years.

Let E_1 be the probable error of a single zenith distance, due to errors of measurement, distortion, and impression. Then

$$E_1 = \pm\frac{0''.075}{\sqrt{2}} = \pm 0''.053;\ \text{pair A};$$
$$E_1 = \pm\frac{0''.051}{\sqrt{2}} = \pm 0''.036;\ \text{pair B}; \tag{1}$$

Since the components of pair B are closer than the average stars of the program, as well as considerably brighter, the value of E_1 for it should not be taken as representative. On the other hand, the components of A are widely separated and differ considerably in magnitude (Table 15). The larger result for E_1 will be accordingly adopted, giving

$$E_1 = \pm 0''.053, \tag{2}$$

or, for a latitude pair,

$$E_2 = \pm 0''.038. \tag{3}$$

On page 88 it was found that the probable error of one pair due to errors of measurement alone was $\pm 0''.020$. Combining this with (3), there results

probable error of a zenith distance due to distortion and photographic impression $\pm 0''.032$.

The probable error E_1 for a single image will now be computed. Remembering that each zenith distance is obtained by measuring three distances formed by six images, it is found from (2) that the probable error of a single image, due to errors of measurement, distortion, and photographic impression, is

$$E_1 = \pm 0.0032 \text{ mm}. \tag{4}$$

This value of E_1 is, it is thought, somewhat larger than its usually accepted value. Subtracting the error of measurement quoted above, leading to a value of ± 0.0017 mm. for each image, the purely photographic error of each image is ± 0.0027 mm. It is seen from (1) that this value is considerably smaller for the brighter stars. However it can be shown that its reduction by even 50 per cent would affect the probable error of the resulting latitudes by only a very small quantity.

It is probable that a portion of the large value of E_1 is due to the abnormal aperture ratio of the objective. Another portion of it may be due to "boiling" within the tube, caused by temperature inequalities.

It is instructive to compare the above value of E_1 with the corresponding value for a reseau line. From the mean probable error of a single reseau distance, $\pm 1.4\mu$ (p. 42), we find that each line is subject to an error of ± 0.0010 mm., or only one-third the value for a star found above.

PROBABLE ERROR DEPENDING UPON STELLAR MAGNITUDE.

It has been accepted that the positions of bright stars can be obtained from measurements on a photographic plate more accurately than those of stars relatively faint. To what extent the brightness of the star affects the accuracy of the latitude deduced from it is deserving special investigation. The wide variation in brightness of the stars forming the latitude program, ranging from the third to the ninth magnitudes, gives abundant material for determining its effect.

The diameters of the images (Table 15) will be taken as a measure of brightness. The stars will be divided into three classes, as follows:

A. Bright stars; diameter of images ranging from 0.08 mm. to 0.13 mm.

B. Medium faint; diameters from 0.033 mm. to 0.055 mm; images "hard."

C. Extremely faint; diameters not measureable; images "soft."

In Groups I to IV there is a sufficient admixture of stars of classes A and B to allow a good determination of the relative accuracy of these two classes. There are no stars of class C in these groups. Only observations during the winter of 1913–14 will be used, in conformity with our general practice of confining investigations to Period C when possible. In the following table are collected the results for the individual stars of classes A and B; v^2 has the meaning assigned on page 81:

TABLE 40.—*Relative value of bright and medium stars in latitude observations.*

Class A.		Class B.	
Star.	Average v^2.	Star.	Average v^2.
	″		″
4	0.0131	2	0.0175
11	.0153	3	.0121
12	.0168	8	.0133
14	.0167	9	.0105
15	.0135	17	.0217
16	.0053	19	.0052
22	.0047	23	.0217
26	.0155	24	.0221
33	.0131	25	.0175
34	.0165	27	.0198
Mean	.0130	Mean	.0161

From the mean v^2 above are deduced the probable errors:

Probable error of a single zenith distance, class A ..... ±0″.084
Probable error of a single zenith distance, class B ..... ± .093

There appears to be a superiority of the bright stars, amounting to 10 per cent in probable error.

The only stars on the program belonging to class C (extremely faint) fall in Groups V and VI. There are no stars of class B in these groups, so that the comparison can only be made between classes A and C. As before, the comparison is limited to Period C (1913–14). The results are shown in the following table:

TABLE 41.—*Relative value of bright and faint stars in latitude observations.*

Class A.		Class C.	
Star.	Average v^2.	Star.	Average v^2.
	″		″
1913:		1913:	
35	0.0332	36	0.0090
44	.0230	37	.0251
45	.0247	40	.0134
		43	.0057
		48	.0123
		49	.0115
1914:		1914:	
35	.0279	36	.0093
44	.0343	37	.0098
45	.0404	40	.0060
		43	.0043
		48	.0082
		49	.0071
Mean	.0306	Mean	.0101

From the mean v^2 is deduced:

Probable error of a single zenith distance, class A ..... ±0″.077
Probable error of a single zenith distance, class C ..... ± .128

The difference between classes A and C is seen to be very pronounced. From these results we conclude that extremely faint stars should not be included in the observing program.

While stars of class B are shown to be inferior to A, the difference is not so great as to justify excluding them. It is found necessary to include a certain number of relatively faint stars in order to secure a full and properly balanced program.

It will be noticed from Table 27, on page 82, that the probable errors for Group VII are less than those for any other group. The reason for this is now apparent. Reference to the table of diameters of images (Table 15) discloses the fact that there are no stars of classes B or C in this group.

Probable error of trail pair.—The bright stars 15 and 16 of Group II were observed as a "trail pair" during the winter of 1911–12 in order to determine if any advantage was to be derived by using a fixed instead of moving plate (p. 12). Group II was completely observed on only 11 nights in this period. The residuals v for the trail pair on these nights were compared with those for the remaining pairs of the group with the following results:

Trail pair, average v^2	$0''.0394$
Remaining pairs, average v^2	.0119

The corresponding probable errors were computed to be $\pm 0''.156$ and $\pm 0''.086$ respectively.

Instead of improved results from the trail pair with fixed plate, the contrary is seen to be the case. Whatever advantage may be derived by a motionless plate is seen to be more than counterbalanced by the greater uncertainty in the position of the trails and in measuring them. For the uncertainty in the plate motion see page 46.

With this instrument star trails of stars of magnitude about 6.5 can be secured on good nights. Unless very bright they are difficult to measure. If a fixed plate were used, a much smaller focal length would have had to be adopted.

REFRACTION OSCILLATIONS.

Observations with the zenith tube show that at times a star oscillates in an irregular period with variable amplitude. The period appears to be of the order of one minute of time, although exact data on this point are not furnished by these observations. At times the amplitude has been found to amount to one second of arc.

Before obtaining the numerical value of the effect of these oscillations upon the latitude, the general evidence of their actual existence will be set forth.

The three images of each star secured both before and after reversal of the rotary are spaced 17 seconds apart in point of time—that is, the images can be considered as giving the positions of the trail at 17-second intervals. Oscillations of very short period are excluded from consideration. The three images of each set are quite close, the separation being 0.9 millimeter. (See Plate Q.) They are all observable at the same time in the field of view of the comparator, which is 4 millimeters in diameter. When the plate containing the star images is properly set in the comparator, the thread of the microscope is parallel to the prime vertical. The three images should accordingly be in a line parallel to the thread, exception being made of the correction for reduction to the meridian, which is so small as to be barely perceptible. In general, the "parallelism" of wire and line of images was very good, but occasionally wide deviations from parallelism or from a straight line even were observed. The amount of this deviation was so large that it did not take measurement to detect, being plainly visible to the eye.

Before the true character of these displacements was discovered it was feared that they might be caused by irregularities in the motion of the carriage. To test the matter, the bright stars 15 and 16 were allowed to "trail," the carriage thus remaining at rest. The trails were measured in the same manner as the point images. All observations of these stars from November 16, 1911, to February 28, 1912 (Table 16), were made in this way. Phenomena similar to those observed with point images just described were disclosed. At times the trail was observed to shoot off in a wide curve for a considerable distance, plainly visible to the

eye, without having recourse to measurement. The cause of the phenomenon could therefore not be a faulty carriage motion. That it is really of atmospheric origin is abundantly proved by the results of the investigations of Nüsl and Fric, of Schlesinger (p. 12), and of this investigation.

An attempt will now be made to secure numerical values of these oscillations. The two components of each of the three pairs of images of a star secured with the photographic instrument are separated in point of time by 23, 59, and 96 seconds. These intervals are so great that oscillations in the position of the star having an irregular period of the order of one minute will produce corresponding irregularities in the three distances measured. If these measured distances are corrected for reduction to the meridian, comparison of the three individual distances with their mean will give a probable error in which the oscillations play a part. Groups IV and VII were chosen for this investigation, since they represent the worst and best seasons of the year in an observing sense. Furthermore, all stars of these groups are bright, so that errors of measurement are a minimum. Let

ε_r=p. e. (in millimeters on the plate) of the refraction oscillation for a single image;
ε_m=combined p. e. of distortion, photographic impress, and measurement of a single image;
ε=total p. e. of one image;
S=sum of the three squared residuals obtained by comparing the three distances of each star with the mean, as just explained.

The relation between ε and S can be found by equating the probable errors of a single measured distance,

$$\sqrt{2}\,\varepsilon = 0.674\sqrt{\frac{S}{2}},$$

whence

$$\varepsilon = 0.337\sqrt{S}. \tag{1}$$

The required refraction oscillation ε_r is then obtained from the equation

$$\varepsilon^2{}_r = \varepsilon^2 - \varepsilon^2{}_m. \tag{2}$$

The average values of S for Groups IV and VII, with the total number of stars upon which each depends, were found to be as follows:

	Number stars	Average S (unity=0.0005 mm.)
Group IV, 1913.....	132	791
Group VII, 1913.....	108	525

Whence, from (1),

$$\begin{aligned} &\text{Group IV}\ldots\ldots\varepsilon = 9.47 = 0.0047 \text{ mm.} \\ &\text{Group VII}\ldots\ldots\varepsilon = 7.72 = \ .0039 \text{ mm.} \end{aligned} \tag{3}$$

On page 91 is found $\varepsilon_m = \pm 0.0032$ mm. Equation (2) accordingly gives

$$\begin{aligned} &\text{Group IV}\ldots\ldots\varepsilon_r = \pm 0.0034 \text{ mm.} \\ &\text{Group VII}\ldots\ldots\varepsilon_r = \pm\ .0022 \text{ mm.} \end{aligned} \tag{4}$$

Since 1 mm. = 40″, ε_r becomes in angular measure

$$\begin{aligned} &\text{Group IV (spring)}\ldots\ldots \pm 0''.136, \\ &\text{Group VII (summer)}\ldots \pm\ \ .088. \end{aligned} \tag{5}$$

The greater steadiness of the summer images is to be noted. This result was anticipated, as the irregularities in alignment of the images was noticeably less in summer than at any other time of year. Schlesinger also has called attention to the fact that the oscillations were more pronounced when the seeing was poor.

The effect of ε_r upon the probable error of a measured zenith distance will now be obtained. Calling this ε_z, manifestly

$$\varepsilon_z = \frac{\varepsilon_r}{6}, \tag{6}$$

from which

$$\begin{aligned} &\text{Group IV} \ldots\ldots \varepsilon_z = \pm 0''.056; \\ &\text{Group VII} \ldots\ldots \varepsilon_z = \pm 0''.036; \end{aligned} \tag{7}$$

Calling ε_p the corresponding effect upon a latitude pair,

$$\begin{aligned} &\text{Group IV} \ldots\ldots \varepsilon_p = \pm 0''.040 \text{ (spring)}; \\ &\text{Group VII} \ldots\ldots \varepsilon_p = \pm 0''.026 \text{ (summer)}. \end{aligned} \tag{8}$$

It has been found (p. 91) that the purely photographic error and error of measurement affecting a latitude pair is

$$\varepsilon'_p = \pm 0''.038,$$

which is of the same order of magnitude as the oscillation effect (8).

From (5) it can be concluded that the maximum double amplitude of these oscillations may reach 0''.8 in the neighborhood of the zenith, the error itself being but one-half, or 0''.4. To secure accuracy in any work depending upon visual star observations, the importance of making several settings is thus seen to be paramount. This is true of measurements in right ascension as well as declination. As a corollary to our result, it can be concluded that the usual practice of spacing the right ascension or time threads close together (2^s to 3^s interval) is a poor one. In order to secure results at a single culmination which shall be free from the effects we are considering, a system of 10 or 12 threads spaced 5 seconds apart is recommended. In observing zenith distances, probably four settings taken at intervals of 15 seconds would suffice.

A word is to be said on the values of ε found in (7) and (8) above. They are misleading unless properly interpreted, being based on the assumption that the refraction oscillations for the six images are independent. This is not true, for manifestly if the oscillations formed a true sine curve having a period of 50 seconds ε_z and ε_p above should both strictly be zero no matter how large the oscillation might be; but this is an extreme case, as is the assumption that the component displacements are independent. The truth is to be found between the two. Accordingly, no exact formulation of the effect of these oscillations on measured zenith distances is possible when a great many images are secured or settings made on each star, as in the present work. A value close to the truth can probably be obtained by taking one-half the values found in (7) and (8), or

Probable error of a single latitude from a pair of stars due to refraction oscillations ..... $\pm 0''.02$

No such uncertainty exists when only one setting on a star is made. In this case it is concluded from (5)

Probable error of a single measured zenith distance (one setting only) due to refraction oscillations ..... $\pm 0''.112$

The importance of a *number* of settings or images is thus shown.

THE SYSTEMATIC ERROR N-S.

In visual observations with zenith telescope there is a systematic error in the latitude, depending upon whether the first star of the pair is observed with telescope east or west of the pier. This is commonly known as the east-west discordance. In "Resultate," Bd. I, p. 113, monthly values of this discordance are given for each of the six latitude stations of the International Geodetic Association for a period of two years. The mean value without regard to sign for Gaithersburg is there found to be 0''.032. For Mizusawa the value is considerably larger. There is no doubt as to the reality of this error in visual observations.

The question arises, Is there a similar error in observations with the photographic zenith tube? In the case of this instrument the difference is to be sought between results obtained when observations are started clamp north and when started clamp south.

Beginning with Group IV, 1913, each of the seven groups has been separately investigated for this error. Since the position of the clamp is reversed on each star on successive nights, the error in question can be obtained by forming the mean latitude for the group for clamp N and clamp S separately, using the data in Table 16. The position of the clamp was obtained from the observing books. Obviously declination errors and latitude variation are eliminated. The results are as follows:

TABLE 42.—*N–S discordance.*

Date.	Group.	ϕ Clamp N.	ϕ Clamp S.	N–S.
		″	″	″
1913, Feb. 8–1913, May 31	IV.	3.308	3.290	+0.018
1913, Apr. 5–1913, July 26	V.	3.182	3.194	− .012
1913, May 8–1913, Aug. 26	VI.	3.107	3.114	− .007
1913, June 29–1913, Nov. 5	VII.	3.147	3.147	.000
1913, Sept. 4–1914, Jan. 6	I.	3.212	3.230	− .018
1913, Oct. 3–1914, Mar. 15	II.	3.314	3.316	− .002
1913, Dec. 5–1914, Apr. 9	III.	3.315	3.295	+ .020
Mean				.000

That the mean result for N–S should come out exactly zero is of course accidental. Its mean value without regard to sign is 0″.011, as compared with 0″.032 for the visual instrument.

It can be concluded that there is no systematic error in results with the photographic instrument which corresponds to the east-west discordance in visual zenith telescopes.

COMMON PAIRS.

Pairs common to the two instruments were observed (a) to determine constant or systematic differences between the results from the two instruments, visual and photographic; (b) to determine the culmination error or displacement of a star, such as for example would be produced by an anamolous refraction acting in one direction for a minute or more.

Since the difference of zenith distance of any two stars within range of the photographic instrument is never more than 20 minutes, it is possible to observe them as a Talcott pair with the zenith telescope. Owing to the partially automatic character of observations with the photographic and its proximity to the visual instrument, it is possible for one observer to secure the simultaneous observations.

The majority of the stars of the photographic program are beyond the reach of the visual instrument on account of their comparative faintness. It was possible to form but 11 pairs which satisfy all requirements as to brightness and proximity in right ascension.

As in the regular program of observations with the visual instrument, four bisections of each star were made, at hour angles ± 19 seconds and ± 28 seconds. The details of the method of making the simultaneous observations are as follows:

The visual instrument is "set" for the pair at least five minutes in advance. The photographic exposures are started at the correct instant, after which the observer hastens to the visual instrument and makes the two bisections before meridian passage at the hour angles given above. Returning quickly to the photographic, the necessary reversal of the rotary is made after the completion of the third exposure. The observer returns immediately to the visual instrument, which he reaches in time to make the third and fourth bisections, after an absence of from 12 to 15 seconds. Levels are read both before and after making the micrometrical settings. Upon gaining a little experience the observer does not feel unduly hurried in making the manipulations and observations just described.

Since it was planned not to interfere in any way with the regular program of work of the zenith telescope, common pair observations were necessarily restricted, since they could only be carried on when the visual instrument was not engaged. The regular program with the visual instrument covers four hours. It is only before and after this period that simultaneous observations can be secured. There is an exception to this in the case of two pairs, 3A and 4A. The first happens to be one of the regular pairs (29) of the visual program. The second falls between two pairs and so can be observed without interfering. It is due to these circumstances that it has been possible to secure a large number of observations of them. It is to be regretted that an equally large number of observations of the remaining nine pairs was not possible.

In reducing the visual observations of the common pairs the screw value has been taken from "Resultate," Bd. IV, p. 79. A level value $1d = 1''.00$ (mean of the two) was adopted. The movement of the bubble has always been kept small, or less than one division.

The declinations used in the reduction are the D (final) of Table 14. With the exception of 3a, which is a scale star, all the stars are on the regular latitude program of the photographic instrument. The photographic latitudes, "Ph. φ" in the following table, were obtained from the values in Table 16, to which the necessary corrections to reduce the declinations there adopted, D_0, to the final values were applied.

TABLE 43.—*Visual and photographic observations of common pairs.*

Pair 2A (11, 12).

Date.	Observer.	Visual ϕ.	Ph. ϕ.	V.-P.	Date.	Observer.	Visual ϕ.	Ph. ϕ.	V.-P.
		"	"	"			"	"	"
1913—Jan. 14	R.	3.38	3.54	−0.16	1913—Oct. 3	R.	3.30	3.24	+0.06
15	R.	3.56	3.60	− .04	4	R.	3.21	3.22	− .01
21	R.	3.59	3.31	+ .28	13	R.	3.42	3.27	+ .15
22	D.	3.45	3.50	− .05	14	R.	3.36	3.34	+ .02
25	D.	3.33	3.40	− .07	22	R.	3.25	3.24	+ .01
26	D.	3.15	3.32	− .17	26	R.	3.14	3.24	− .10
30	D.	3.09	3.46	− .37	Nov. 1	R.	3.21	3.24	− .03
Feb. 1	R.	3.60	3.38	+ .22	1914—Jan. 6	R.	3.64	3.42	+ .22
2	R.	3.26	3.38	− .12	26	R.	3.43	3.42	+ .01
4	R.	3.38	3.37	+ .01	29	R.	3.54	3.48	+ .06
5	R.	3.56	3.49	+ .07	Feb. 1	M.	3.21	3.40	− .19
6	R.	3.71	3.52	+ .19	2	R.	3.52	3.56	− .04

Pair 2B (13, 14).

1913—Feb. 1	R.	3.54	3.67	−0.13	1913—Oct. 14	R.	3.47	3.36	+0.11
2	R.	3.44	3.47	− .03	22	R.	3.09	3.17	− .08
4	R.	3.26	3.34	− .08	26	R.	3.05	3.21	− .16
6	R.	3.26	3.26	.00	Nov. 1	R.	3.11	3.01	+ .10
8	D.	3.20	3.23	− .03	1914—Feb. 1	M.	3.90	3.66	+ .24
12	R.	3.65	3.47	+ .18	2	R.	3.41	3.43	− .02
Oct. 3	R.	3.07	3.13	− .06	8	R.	3.52	3.52	.00
4	R.	3.45	3.19	+ .26	9	M.	3.16	3.27	− .11
13	R.	3.41	3.30	+ .11	11	R.	3.23	3.27	− .04

Pair 3A (3a, 21).

1912—Jan. 19	R.	3.30	3.27	+0.03	1913—Mar. 18	R.	3.42	3.12	+0.30
21	R.	2.92	3.14	− .22	20	R.	3.18	3.27	− .09
22	R.	3.01	3.15	− .14	22	D.	3.60	3.34	+ .26
27	R.	3.24	2.93	+ .31	Dec. 5	R.	3.42	3.15	+ .27
Feb. 4	R.	2.95	2.87	+ .08	9	R.	3.39	3.41	− .02
6	R.	3.12	3.02	+ .10	11	R.	3.49	3.21	+ .28
Nov. 30	R.	3.27	3.78	− .51	15	R.	3.14	3.31	− .17
Dec. 9	R.	3.50	3.73	− .23	18	R.	3.39	3.10	+ .29
12	R.	3.57	3.87	− .30	19	R.	3.32	3.19	+ .13
1913—Jan. 4	R.	3.30	3.57	− .27	27	R.	3.40	3.45	− .05
13	R.	3.55	3.35	+ .20	29	R.	3.60	3.44	+ .16
14	R.	3.27	3.57	− .30	1914—Jan. 11	M.	3.32	3.29	+ .03
21	R.	3.54	3.60	− .06	29	R.	3.18	3.39	− .21
Feb. 1	R.	3.53	3.60	− .07	Feb. 1	M.	3.12	3.17	− .05
4	R.	3.38	3.21	+ .17	2	R.	3.48	3.36	+ .12
6	R.	3.60	3.53	+ .07	9	M.	3.27	3.31	− .04
7	D.	3.35	3.39	− .04	11	R.	3.39	3.42	− .03
8	D.	3.74	3.52	+ .22	16	R.	3.41	3.39	+ .02
12	R.	3.56	3.46	+ .10	17	M.	3.40	3.58	− .18
13	R.	3.20	3.43	− .23	21	R.	3.23	3.29	− .06
14	D.	3.53	3.27	+ .26	24	M.	3.57	3.19	+ .38
18	R.	3.54	3.47	+ .07	26	R.	3.25	3.42	− .17
23	R.	3.17	3.09	+ .08	Mar. 8	R.	3.21	3.44	− .23
25	D.	3.85	3.43	+ .42	10	M.	3.51	3.51	.00
28	R.	3.54	3.39	+ .15	12	M.	3.45	3.45	.00
Mar. 5	R.	3.32	3.27	+ .05	13	R.	3.50	3.45	+ .05
7	R.	3.74	3.56	+ .18	15	R.	3.55	3.35	+ .20
12	R.	3.27	3.33	− .06	22	R.	3.19	3.31	− .12
17	D.	2.93	3.19	− .26	24	R.	3.38	3.37	+ .01

Pair 3B (27, 28).

1913—Mar. 22	D.	3.35	3.41	−0.06	1913—Dec. 29	R.	2.86	3.29	−0.43
31	R.	3.29	3.03	+ .26	1914—Jan. 11	M.	3.54	3.29	+ .25
Apr. 1	D.	3.05	3.39	− .34	29	R.	3.22	3.47	− .25
Dec. 5	R.	3.33	3.31	+ .02	Mar. 24	R.	3.43	3.37	+ .06
11	R.	3.29	3.25	+ .04	Apr. 3	R.	3.46	3.20	+ .26
13	R.	3.07	3.21	− .14	5	M.	3.92	3.43	+ .49
18	R.	3.44	3.41	+ .03	9	M.	3.13	3.50	− .37
19	R.	3.06	3.58	− .52					

Pair 4A (30, 31).

1912—Apr. 19	R.	3.13	3.37	−0.24	1913—Mar. 2	D.	3.56	3.36	+0.20
23	R.	3.15	3.29	− .14	5	R.	3.67	3.45	+ .22
27	R.	3.13	3.38	− .25	11	D.	3.17	3.07	+ .10
May 1	R.	3.25	2.98	+ .27	17	D.	3.40	3.36	+ .04
4	R.	3.19	3.13	+ .06	18	R.	3.51	3.33	+ .18
9	R.	3.08	3.15	− .07	20	R.	3.29	3.33	− .04
10	R.	2.81	3.04	− .23	22	D.	3.43	3.21	+ .22
20	R.	3.27	3.17	+ .10	28	D.	3.55	3.17	+ .38
1913—Feb. 12	R.	3.57	3.72	− .15	31	R.	2.88	3.07	− .19
18	R.	3.46	3.43	+ .03	Apr. 6	R.	2.98	3.21	− .23
18	R.	3.38	3.27	+ .11	17	R.	3.22	3.41	− .19

TABLE 43.—*Visual and photographic observations of common pairs*—Continued.

Pair 4A (30, 31)—Continued.

Date.	Observer.	Visual φ.	Ph. φ.	V.-P.	Date.	Observer.	Visual φ.	Ph. φ.	V.-P.
		″	″	″			″	″	″
1913—Apr. 20	R.	3.13	3.15	− .02	1914—Mar. 15	R.	3.58	3.45	+ .13
21	D.	3.07	3.27	− .20	24	R.	3.22	3.34	− .12
24	D.	3.21	3.32	− .11	Apr. 3	R.	3.22	3.30	− .08
25	R.	3.34	3.31	+ .03	5	M.	3.69	3.34	+ .35
30	R.	3.12	3.21	− .09	9	M.	3.98	3.54	+ .44
May 1	R.	3.18	3.31	− .13	12	R.	3.31	3.35	− .04
3	R.	3.04	3.33	− .29	13	R.	3.41	3.27	+ .14
10	R.	2.98	3.17	− .19	17	R.	3.45	3.52	− .07
1913—May 19	R.	3.19	3.25	−0.06	21	M.	3.50	3.39	+ .11
20	R.	3.08	3.27	− .19	23	M.	3.09	3.23	− .14
1914—Feb. 8	R.	3.39	3.55	− .16	27	R.	3.20	3.35	− .06
11	R.	3.39	3.39	.00	28	M.	3.44	3.23	+ .21
16	R.	3.30	3.37	− .07	May 11	R.	3.20	3.39	− .10
21	R.	3.46	3.39	+ .07	16	M.	3.54	3.32	+ .22
24	M.	3.18	3.29	− .11	17	R.	3.26	3.27	− .01
26	R.	3.30	3.25	+ .05	18	M.	3.31	3.48	− .17
Mar. 8	R.	3.05	3.35	− .30	19	R.	3.21	3.35	− .14
12	M.	2.87	3.22	− .35	21	M.	3.84	3.35	+ .49
13	R.	3.35	3.51	− .16					

Pair 5A (36, 37).

1912—Mar. 30	R.	3.41	3.17	+0.24	1914—Apr. 3	R.	4.04	3.48	+0.56
Apr. 3	R.	3.21	3.22	− .01	5	M.	3.28	3.26	+ .02
9	R.	2.96	3.17	− .21	6	R.	3.64	3.46	+ .18
10	R.	3.14	3.16	− .02	9	M.	3.71	3.63	+ .08
11	R.	3.24	3.14	+ .10	10	R.	3.60	3.49	+ .11
June 9	R.	2.99	3.04	− .05	12	R.	3.12	3.32	− .20
13	R.	3.14	3.19	− .05	13	R.	3.52	3.40	+ .12
20	R.	2.95	3.29	− .34	June 11	M.	3.32	3.28	+ .04
1913—Apr. 6	R.	3.34	3.24	+ .10	13	M.	3.19	3.27	− .08
8	R.	3.16	3.36	− .20	15	R.	3.34	3.28	+ .06
June 9	R.	3.33	3.11	+ .22	16	M.	3.04	3.32	− .28
13	R.	3.19	3.21	− .02	17	R.	3.29	3.26	+ .03
15	R.	3.29	3.12	+ .17	19	R.	3.32	3.20	+ .12
18	R.	3.22	3.03	+ .19	20	M.	3.04	3.20	− .16
29	R.	3.10	2.90	+ .20	24	R.	3.18	3.26	− .08
30	R.	3.13	3.04	+ .09	30	R.	3.33	3.36	− .03
July 3	R.	3.24	2.98	+ .26	July 2	R.	3.24	3.32	− .08
6	R.	2.82	2.94	− .12	3	R.	3.28	3.10	+ .18
10	R.	3.18	3.18	.00	5	R.	3.07	3.17	− .10
11	R.	2.97	3.16	− .19					

Pair 5B (41, 42).

1913—Apr. 8	R.	2.97	3.03	−0.06	1913—July 21	R.	2.83	3.15	−0.32
17	R.	3.17	3.20	− .12	26	R.	2.92	3.11	− .19
19	D.	3.31	3.46	− .15	1914—Apr. 3	R.	3.05	3.35	− .30
21	D.	3.15	3.24	− .09	9	M.	3.68	3.60	+ .08
24	D.	3.14	3.14	.00	13	R.	3.65	3.41	+ .24
25	R.	3.42	3.16	+ .26	17	R.	3.49	3.41	+ .08
29	D.	3.50	3.37	+ .13	18	M.	3.40	3.43	− .03
30	R.	3.28	3.27	+ .01	27	R.	3.56	3.24	+ .32
May 1	R.	3.46	3.15	+ .31	July 12	R.	3.25	3.30	− .05
2	D.	3.28	3.27	+ .01	15	R.	3.17	3.03	+ .14
3	R.	3.36	3.43	− .07	17	R.	3.21	3.19	+ .02
8	R.	3.24	3.05	+ .19	19	R.	3.38	3.21	+ .17
July 10	R.	3.05	2.91	+ .14	20	R.	3.32	3.19	+ .13
13	R.	3.06	3.27	− .21	21	R.	3.15	3.25	− .10

Pair 6A (47, 48).

1913—May 8	R.	3.42	3.41	+0.01	1914—May 19	R.	3.42	3.13	+0.29
11	R.	3.28	3.15	+ .13	21	M.	3.57	3.21	+ .36
24	R.	3.21	3.12	+ .09	26	M.	3.75	3.28	+ .47
31	R.	3.39	3.27	+ .12	30	R.	3.60	3.38	+ .22
June 2	R.	3.03	3.15	− .12	31	M.	3.17	3.22	− .05
5	R.	3.31	3.04	+ .27	June 2	R.	3.34	3.29	+ .05
9	R.	3.06	3.15	− .09	7	M.	3.14	3.28	− .14
Aug. 14	R.	3.05	3.11	− .06	14	M.	3.20	3.20	.00
15	R.	2.98	3.10	− .12	16	M.	3.38	3.04	+ .34
16	R.	3.04	3.08	− .04	19	R.	3.54	3.22	+ .32
20	R.	3.21	3.20	+ .01	20	M.	3.48	2.97	+ .51
21	R.	3.11	3.07	+ .04	22	R.	3.15	3.05	+ .10
25	R.	2.93	3.11	− .18	Aug. 31	R.	3.29	3.28	+ .01
26	R.	3.17	3.10	+ .07	Sept. 2	R.	3.30	3.14	+ .16
1914—May 15	R.	3.54	3.36	+ .18	4	R.	3.17	3.02	+ .15
16	M.	3.94	3.34	+ .60	9	R.	3.10	3.05	+ .05
17	R.	3.63	3.21	+ .42	15	R.	3.05	3.08	− .03
18	M.	3.38	3.40	− .02					

TABLE 43.—*Visual and photographic observations of common pairs*—Continued.

Pair 7A (51, 52).

Date.	Observer.	Visual ϕ.	Ph. ϕ.	V.-P.	Date.	Observer.	Visual ϕ.	Ph. ϕ.	V.-P.
		"	"	"			"	"	"
1912—June 20	R.	3.28	3.32	−0.04	1913—Oct. 14	R.	3.15	3.18	−0.03
July 2	R.	3.29	3.04	+ .25	16	R.	3.25	3.14	+ .11
3	R.	3.12	3.18	− .06	22	R.	3.10	3.16	− .06
5	R.	3.53	3.14	+ .39	1914—June 29	R.	3.08	3.04	+ .04
7	R.	3.40	3.36	+ .04	Sept. 28	R.	3.21	3.06	+ .15
1913—June 29	R.	3.10	2.98	+ .12	29	R.	2.98	3.08	− .10
30	R.	3.21	3.04	+ .17	30	R.	3.39	3.16	+ .23
July 3	R.	3.16	3.20	− .04	Oct. 1	R.	3.25	2.98	+ .27
7	R.	3.21	3.20	+ .01	2	R.	3.03	3.02	+ .01
8	R.	3.09	3.11	− .02	5	R.	3.11	3.20	− .09
Sept. 23	R.	2.94	3.11	− .17	9	R.	3.04	3.07	− .03
24	R.	3.30	3.19	+ .11	10	R.	3.18	3.26	− .08
25	R.	3.23	3.14	+ .09	12	R.	3.02	3.35	− .33
27	R.	3.22	3.20	+ .02	17	R.	3.11	2.98	+ .13
28	R.	3.23	3.08	+ .15	19	R.	3.02	3.22	− .20
Oct. 3	R.	3.14	3.05	+ .09	20	R.	3.16	2.88	+ .28
4	R.	2.80	3.00	− .20	21	R.	3.11	3.24	− .13
12	R.	2.95	3.19	− .24	22	R.	3.03	3.18	− .15
13	R.	3.28	3.24	+ .04					

Pair 7B (57, 58).

1913—June 29	R.	3.19	3.12	+0.07	1913—Nov. 4	R.	3.03	3.14	−0.11
30	R.	2.85	3.07	− .22	5	R.	2.93	3.12	− .19
July 3	R.	3.05	3.08	− .03	1914—Sept. 26	M.	2.95	2.98	− .03
7	R.	2.94	3.16	− .22	28	R.	3.25	3.14	+ .11
8	R.	3.12	3.16	− .04	29	M.	3.29	3.05	+ .24
Sept. 23	R.	3.10	3.08	+ .02	30	R.	3.27	3.10	+ .17
24	R.	3.17	3.18	− .01	Oct. 1	M.	3.08	3.15	− .07
25	R.	3.13	3.16	− .03	2	R.	3.21	3.04	+ .17
27	R.	3.19	3.29	− .10	5	M.	3.07	3.07	.00
28	R.	3.12	3.13	− .01	9	R.	3.29	3.00	+ .29
Oct. 3	R.	3.81	3.20	+ .61	10	M.	3.06	3.12	− .06
4	R.	3.43	3.22	+ .21	12	M.	3.08	3.11	− .03
12	R.	3.22	3.16	+ .06	19	R.	3.23	3.01	+ .22
13	R.	3.49	3.17	+ .32	20	R.	2.89	2.94	− .05
14	R.	3.22	3.03	+ .19	21	R.	2.83	2.88	− .05
16	R.	3.49	3.10	+ .39	22	R.	3.07	3.15	− .08
22	R.	3.35	3.14	+ .21	23	R.	3.16	3.04	+ .12

Pair 7C (62, 63).

1912—Nov. 11	R.	3.66	3.57	+0.09	1913—Aug. 4	R.	3.22	3.13	+0.09
16	R.	3.37	3.54	− .17	7	R.	3.27	3.07	+ .20
18	R.	3.23	3.69	− .46	Nov. 4	R.	3.44	3.30	+ .14
19	R.	3.45	3.49	− .04	5	R.	3.14	3.04	+ .10
20	R.	3.42	3.33	+ .09	1914—July 15	R.	3.39	3.28	+ .11
25	R.	3.23	3.51	− .28	16	R.	3.16	3.07	+ .09
30	R.	3.33	3.48	− .15	17	R.	3.36	3.21	+ .15
Dec. 3	R.	3.50	3.47	+ .03	19	R.	3.21	3.11	+ .10
1913—July 7	R.	3.21	3.33	− .12	20	R.	3.10	3.27	− .17
8	R.	3.27	3.21	+ .06	21	R.	3.30	3.23	+ .07
18	R.	3.27	3.19	+ .08	31	R.	2.67	3.17	− .50
21	R.	3.27	3.25	+ .02	Aug. 13	R.	3.13	3.13	.00
Aug. 2	R.	3.08	3.00	+ .08					

Discarded common pairs.

Date.	Pair.	Observer.	Visual ϕ.	Ph. ϕ.	V-P.
			"	"	"
1914—Mar. 20	4A	M.	2.42	3.11	−0.69
1913—May 10	5B	R.	2.88	3.55	− .67
1914—Apr. 5	5B	M.	4.13	3.29	+ .84
Sept. 5	6A	R.	3.88	3.16	+ .72

Discussion of common pair results.—The first step in the discussion of the common pair observations is the elimination of personality. To this end the means of the differences V–P in the above table were formed for each of the observers D., M., and R., extending over periods of time common to each pair of observers. In the case of R., the difference for the entire period was formed in addition. The results are shown in the following table:

TABLE 44.—*Personality in common pairs.*

Period.	Observer.	Number of observations.	V–P.
			″
1912—January-April	D.	24	+0.012
Do	R.	49	+ .012
1914—January-October	M.	46	+ .071
Do	R.	105	+ .029
1911-1914	R.	302	+ .015

In M.'s results a pronounced personality is shown. With reference to the observer R. it is

$$M.-R.=+0''.042.$$

In order to obtain additional evidence as to the reality of this difference, the visual latitudes of the regular program (Table 50) were examined. Only observations from January to June, 1914, inclusive were used, since the later results (July to October) had not yet been received from Potsdam. The difference in the mean latitude for this period was found to be

$$M.-R.=-0''.016.$$

(For final value of M.–R., see p. 126.)

These two values of the relative personal equation are seen to be contradictory. But it is to be considered that the habits of the observer in making hurried common pair observations are necessarily different from those he forms in making the more deliberate observations of the regular visual program. A distinguished authority has expressed the opinion that personal equation in zenith telescope observations is a matter of habits and methods of manipulation. This view gains confirmation from the results just obtained.

In all the reductions and discussion of common pairs which follow the visual observations of M. will be corrected by $-0''.04$.

The table which follows contains the mean value of V–P for each pair, and the probable error E_d of a single determination of its value, computed from a comparison of the mean values with the individual results. The mean zenith distance of each pair for 1913.0 is also given.

TABLE 45.—*Mean results of common-pair observations.*

Pair.	Z. D. (+south).	Number of observations.	Mean V–P.	E_d.	Pair.	Z. D. (+south).	Number of observations.	Mean V–P.	E_d.
	′		″	″		′		″	″
2A	+0.9	24	0.00	±0.102	6A	−1.8	35	+0.11	±0.129
2B	+0.1	18	+ .01	.084	7A	−1.9	37	+ .02	.107
3A	+2.4	58	+ .01	.132	7B	+0.7	34	+ .05	.125
3B	+1.2	15	− .05	.195	7C	+2.4	25	− .02	.123
4A	+0.6	59	− .02	.125					
5A	−1.5	39	+ .02	.120	Weighted mean	+0.21		+ .016	±0.127
5B	−1.1	28	+ .02	.117			P. e.	± .008	

Excepting the one abnormal value for pair 6A, the values of V−P are no larger than one would expect from the probable errors. If there is any error in the determination of scale or screw value of either visual or photographic instrument, a correlation between the columns Z. D. and mean V−P in the above table would be shown. Omitting 6A, the unweighted mean is

	V−P
South stars	0″.00
North stars	+ .02

An unimportant relative scale correction is indicated.

Answer to the very interesting and important question—*Is there any systematic difference in the latitude as determined by these two instruments so radically different in type and method of*

operation?—is to be found in the above table. The mean difference between the results of the two instruments is there found to be, omitting pair 6A,

$$\text{Mean } V-P=+0''.006.$$

The systematic difference between the instruments is thus seen to be less than one one-hundredth of a second of arc. In this it is tacitly assumed that the personal equation of the observers D. and R. is zero, or vanishes in the mean. Normally relative personal equation in latitude observations has been found to be very small and of the same order of magnitude as the probable error of its determination. There exist no data on absolute personal equation. The observations of the writer have been compared for relative personal equation with four observers. The value obtained in each case is small (see p. 126) and probably uncertain by its entire amount.

It is very unlikely that the observer should have an absolute personal equation which is balanced in the above mean V−P by a hypothetical relative instrumental equation between the two instruments. It can safely be concluded that the absolute personal equation of the observer is zero and that there is *no systematic difference in the performance of visual and photographic instruments.*

It is to be noted that we have been here dealing with zenith pairs only. The question of the existence of a systematic error in observing pairs with the zenith telescope which are not close to the zenith can not find an answer here. (See p. 10.)

Refraction errors from common pairs.—It has appeared from the results on page 94 that stars are subject to marked oscillations due to refraction anomalies. If the period of this disturbance is sufficiently long, so that the disturbance has the same sign during the period of time covered by the individual settings on the star (from one and one-half to two minutes), a pronounced effect on the resulting latitude will appear. If the period is shorter, the effect will still be present, but to a lesser degree.

Now it is evident that if latitude pairs are observed independently with two instruments the presence of these oscillations will be disclosed by a comparison of their results, since abnormal values obtained with one instrument will be paralleled by abnormal results with the other. In order to obtain the amount of this disturbance in terms of probable error, let

E_p =p. e. of one pair, photographic, due to instrumental errors and errors of measurement;
E_v =corresponding p. e. of visual instrument;
E_r =p. e. of refraction disturbance as affecting one pair;
E'_p=total p. e. of one pair, photographic;
E'_v=total p. e. of one pair, visual;
E_d =p. e. of one pair difference formed from the two instruments.

Between these quantities exist the relations

$$E'^2_p=E^2_p+E^2_r; \qquad E'^2_v=E^2_v+E^2_r; \qquad E^2_d=E^2_p+E^2_v;$$

whence

$$2E^2_r=E'^2_p+E'^2_v-E^2_d. \tag{1}$$

Each of the 11 common pairs furnishes a value of E_d, which is given in Table 46. Separate values of the refraction error E_r can thus be computed for each pair from formula (1). The results, as well as the data used, are shown in the following table. E'_p, or the total probable error of one pair, photographic, was obtained from the final mean values given in Table 27, weighting the values for each of the three periods according to the number of nights the common pair in question was observed in them. Since most of the observations fell in period C (after February 5, 1913) its probable error, $\pm 0''.060$, receives the greatest weight. A similar course was followed in obtaining E'_v, except here the weighting was done according to observers, the proportionate number of nights each observed the pair in question being the determining factor. For these probable errors see page 122.

TABLE 46.—*Refraction errors from common pairs.*

Pair.	Number of observations.	Observers.	E'_p.	E'_v.	E_d.	$2E^2_r$.	Pair.	Number of observations.	Observers.	E'_p.	E'_v.	E_d.	$2E^2_r$.
			″	″	″	″				″	″	″	″
2A.....	24	D. M. R.	±0.071	±0.112	±0.102	+0.0072	5B.....	28	D. M. R.	±0.060	±0.116	±0.117	+0.0337
2B.....	18	D. M. R.	.065	.112	.084	+ .0097	6A.....	35	M. R.	.060	.110	.129	− .0094
3A.....	58	D. M. R.	.067	.114	.132	+ .0001	7A.....	37	R.	.063	.103	.107	+ .0313
3B.....	15	D. M. R.	.060	.120	.195	− .2002	7B.....	34	M. R.	.060	.105	.125	− .0100
4A.....	59	D. M. R.	.063	.118	.125	+ .0227	7C.....	25	R.	.067	.103	.123	− .0003
5A.....	39	M. R.	.066	.108	.120	+ .0162							

Weighting according to the number of observations, there results,

$$2E^2_r = +0''.00104,$$

whence $$E_r = \pm 0''.023, \text{ with a probable error of } 0''.024.$$

The value of the short period refraction errors affecting a latitude pair has already been found (p. 95). Its estimated amount was $\pm 0''.02$. By definition E_r includes this error and possible errors of longer period; but from its small value, $\pm 0''.023$, it is to be concluded that the long period oscillations to this order of magnitude do not exist. As this statement may be misunderstood, a few remarks are necessary. In the first place it is difficult to define exactly the limiting periods included under the term "long period." The lower limit should be placed at about two minutes. The upper limit merges into the lower limit for the oscillations treated under the heading "night error." The term "average period" should probably be used for this class, which is nonexistent, as just found.

RESULTS OF OBSERVATIONS WITH THE VISUAL INSTRUMENT.

As explained elsewhere in this memoir, it is essential to the study here undertaken to make a comparison of the visual and photographic observations. In fact such comparison was one of the chief reasons for undertaking the double series.

The observations made with the visual instrument will now be treated with the same fullness as those made with the photographic instrument, omitting descriptions of instrument, its theory and method of observation, they being too well known to require attention.

Dr. Helmert has kindly had forwarded from the computing bureau at Potsdam the individual values of the latitudes observed with the visual instrument. The visual program is made up of 96 pairs of stars divided into 12 groups, of which two are observed each evening. It is not considered necessary to enter into details concerning these results. They will appear in a subsequent publication of the International Geodetic Association. The individual latitudes are as follows:

TABLE 47.—*Individual latitudes, visual.*

$\phi = 39° 8' 10''+$

Pair	65.	66.	67.	68.	69.	70.	71.	72.	73.	74.	75.	76.	77.	78.	79.	80.
	"	"	"	"	"	"	"	"	"	"	"	"	"	"	"	"
1911—June 9	3.15	3.48	3.08	3.18	3.17	3.25	3.02	3.38	3.71	3.69	3.55	3.11	3.56	3.51	3.52	3.30
11	3.79	.....	.....	.....	.....	.....	.....	.....	.....	.....	.....	.....	.....	.....	.....	.....
14	.....	.....	3.44	3.37	3.46	3.52	3.05	3.29	3.54	.....	3.49	.....	.....	.....	.....	.....
15	3.24	3.25	3.43	3.16	3.29	3.27	3.52	3.30	.....	3.57	.....	.....	.....	.....	.....	.....
16	.....	.....	.....	.....	.....	.....	.....	.....	.....	.....	3.38	3.38	3.75	3.31	3.18	3.45
18	3.39	3.54	3.73	3.30	3.37	3.52	3.28	3.63	3.66	3.65	3.63	3.55	3.77	3.51	3.33	.....
20	2.94	3.74	3.80	3.57	3.47	3.27	3.32	3.28	3.97	3.71	3.56	3.59	3.60	3.38	3.72	3.45
21	3.73	3.20	3.71	3.34	3.38	3.16	.....	3.45	3.78	3.56	3.38	3.81	3.51	3.30	3.37	3.48
22	.....	3.62	3.62	3.63	3.66	3.60	3.20	.....	.....	.....	.....	.....	.....	.....	.....	.....
26	3.36	.....	.....	.....	.....	.....	.....	.....	.....	.....	.....	.....	.....	.....	.....	.....
27	3.50	3.13	3.35	3.51	3.27	3.22	3.23	3.49	3.54	3.59	3.56	3.43	3.18	3.23	3.45	3.44
28	3.75	3.54	3.34	3.29	3.64	3.46	3.58	3.65	3.73	3.69	3.42	3.78	3.69	3.49	3.39	3.35
29	3.66	3.37	3.82	3.51	3.26	3.77	3.32	3.19	3.65	3.62	3.62	3.55	3.53	3.56	3.74	3.28
30	3.54	3.58	3.86	3.21	3.50	3.41	3.47	3.41	3.82	3.94	3.48	3.43	3.59	3.38	3.49	3.58
July 1	3.58	3.46	3.75	3.62	3.25	3.37	3.27	3.34	3.66	3.44	3.71	3.41	3.39	3.39	3.74	3.39
6	3.53	3.68	3.33	3.36	3.31	3.36	3.34	3.75	3.38	3.52	3.55	3.54	3.73	3.41	3.56	3.38
9	3.20	3.38	3.25	3.46	3.46	3.34	3.38	3.60	3.60	3.56	3.51	3.50	3.68	3.30	3.57	3.43

Pair	73.	74.	75.	76.	77.	78.	79.	80.	81.	82.	83.	84.	85.	86.	87.	88.
	"	"	"	"	"	"	"	"	"	"	"	"	"	"	"	"
1911—July 12	3.71	3.60	3.79	3.69	3.65	3.77	3.40	3.28	.....	.....	.....	.....	.....	.....	.....	.....
14	3.96	3.64	.....	.....	3.48	3.42	3.82	3.42	3.60	3.62	3.62	3.49	3.40	.....	.....	.....
15	3.69	3.67	3.46	3.59	3.54	3.38	3.46	3.35	3.34	3.38	3.49	3.42	3.76	3.47	3.72	3.37
17	4,17	3.59	3.73	3.77	3.73	3.68	3.50	3.54	.....	3.63	3.80	3.81	.....	3.75	.....	.....
19	.....	3.75	3.61	.....	.....	.....	.....	.....	.....	.....	.....	.....	.....	.....	.....	.....
20	3.97	3.58	3.79	3.60	3.51	.....	.....	.....	.....	.....	.....	.....	.....	.....	.....	.....
22	3.57	3.56	.....	3.46	3.49	3.87	3.44	3.31	3.32	3.58	3.50	3.25	3.18	3.39	3.48	.....
27	3.83	3.73	3.73	3.70	3.81	3.38	3.42	3.62	3.64	3.36	3.63	3.46	3.59	3.51	3.54	3.75
28	3.92	3.52	3.55	.....	.....	.....	.....	.....	.....	.....	.....	.....	.....	.....	.....	.....
31	3.78	3.71	3.43	3.74	3.53	3.63	3.26	3.59	3.34	3.52	3.45	3.40	3.58	3.53	3.42	3.59
Aug. 9	3.65	3.44	3.40	3.67	3.65	3.50	3.67	3.44	3.20	3.52	3.36	3.51	3.48	3.52	3.67	3.77
7	3.66	3.74	3.53	3.83	3.48	3.55	3.44	3.43	3.57	3.45	3.45	3.31	3.41	3.54	3.41	3.50
8	3.88	3.70	3.51	3.51	3.51	.....	3.41	3.78	3.23	3.64	3.73	3.47	3.46	3.40	3.87	3.34
9	3.72	3.73	3.70	3.83	3.42	3.46	3.56	3.35	3.38	3.69	3.62	3.63	3.31	.....	3.71	3.58
10	3.76	.....	3.53	3.62	3.63	.....	3.70	3.59	3.10	3.57	3.49	3.65	3.56	3.47	3.76	3.46
11	3.69	.....	.....	.....	.....	.....	.....	.....	.....	.....	.....	.....	.....	.....	.....	.....

Pair	81.	82.	83.	84.	85.	86.	87.	88.	89.	90.	91.	92.	93.	94.	95.	96.
	"	"	"	"	"	"	"	"	"	"	"	"	"	"	"	"
1911—Aug. 16	3.49	3.53	3.60	3.72	3.51	3.59	3.36	3.69	.....	.....	.....	.....	.....	.....	.....	.....
21	3.07	3.73	3.43	4.13	.....	.....	.....	.....	.....	.....	.....	.....	.....	.....	.....	.....
Sept. 1	3.20	3.35	3.51	3.86	3.32	3.59	3.64	3.13	3.42	3.58	3.78	3.36	3.70	3.37	3.20	3.48
2	3.35	3.70	3.60	3.39	3.18	.....	3.58	3.63	3.25	.....	.....	.....	.....	.....	.....	.....
12	3.56	3.99	3.80	3.72	3.55	3.52	3.40	3.62	3.42	3.49	3.41	3.87	3.71	3.45	3.40	3.61
13	3.54	4.03	3.36	3.81	3.54	3.89	3.63	3.50	3.54	3.64	3.32	3.42	.....	.....	.....	.....
16	3.27	3.54	3.60	3.48	3.53	3.62	3.41	3.46	3.41	3.37	3.27	3.51	3.38	3.20	3.54	3.58
17	3.40	3.49	3.63	.....	.....	.....	.....	.....	.....	.....	.....	.....	.....	.....	.....	.....
19	.....	3.62	.....	.....	.....	.....	.....	.....	.....	.....	.....	.....	.....	.....	.....	.....
20	3.49	3.51	3.63	3.45	3.50	3.66	3.59	3.48	3.55	3.53	3.50	3.67	3.48	3.82	3.40	3.61
22	3.77	3.56	3.95	3.62	3.61	3.71	3.75	3.56	3.68	3.42	3.43	3.48	3.28	3.53	3.45	3.45

TABLE 47.—*Individual latitudes, visual*—Continued.

Pair	89.	90.	91.	92.	93.	94.	95.	96.	1.	2.	3.	4.	5.	6.	7.	8.
	"	"	"	"	"	"	"	"	"	"	"	"	"	"	"	"
1911—Sept. 26	3.69	3.66	3.60	3.54	3.60	3.63	3.44	3.29	3.72	3.70	3.55	.....	3.80	3.63	3.82	3.80
29	3.69	3.73	3.28	3.23	3.43	3.69	3.42	.....	.....	.....	.....	.....	.....	.....	.....	.....
30	3.82	3.60	3.61	3.08	3.39	3.29	3.51	3.23	3.79	3.41	3.70	3.64	3.40	4.03	3.60	3.66
Oct. 6	3.32	3.66	.....	3.61	3.80	.....	.....	.....	.....	.....	.....	.....	.....	.....	.....	.....
11	3.58	3.46	3.27	3.49	3.25	3.40	3.57	2.98	3.50	3.56	3.40	3.33	3.81	3.65	3.24	3.50
12	3.67	3.34	3.52	3.36	3.07	3.40	3.20	3.40	3.74	3.36	3.58	3.68	3.61	3.48	.....	.....
18	3.50	3.48	3.46	3.48	3.46	.....	3.23	3.64	3.16	3.20	3.44	3.32	3.53	3.39	3.53	3.53
23	3.41	3.50	3.19	3.33	3.72	3.46	3.57	3.04	3.55	3.66	3.81	3.60	3.36	2.79	3.28	3.28
24	3.56	3.61	3.45	3.32	3.52	3.34	3.33	3.68	3.39	3.22	3.40	3.64	3.46	3.46	3.55	3.57
25	3.54	3.31	3.28	3.14	3.52	3.61	3.27	3.34	3.43	3.37	3.43	3.54	3.45	3.22	3.57	3.63
26	3.29	3.40	3.63	3.40	3.21	3.56	3.24	3.54	3.29	3.39	3.50	3.48	3.58	.....	.....	.....
29	3.54	3.45	3.56	3.33	3.45	3.52	3.36	3.53	3.67	3.15	3.18	3.55	3.72	3.36	3.41	3.27
30	3.24	3.60	.....	.....	.....	.....	.....	.....	.....	.....	.....	.....	.....	.....	.....	.....

Pair	1.	2.	3.	4.	5.	6.	7.	8.	9.	10.	11.	12.	13.	14.	15.	16.
	"	"	"	"	"	"	"	"	"	"	"	"	"	"	"	"
1911—Nov. 2	3.89	3.06	3.47	3.46	3.20	3.45	3.40	3.15	3.42	3.31	3.54	3.20	3.80	3.30	3.37	3.09
3	3.40	3.24	3.48	3.59	3.86	3.54	3.18	3.48	3.17	3.34	3.37	3.15	3.75	.....	.....	.....
7	3.78	3.42	3.43	3.51	3.35	3.36	3.32	3.35	.....	.....	.....	.....	.....	.....	.....	.....
10	3.41	3.35	3.15	3.59	3.19	3.17	3.27	3.67	3.38	3.14	3.27	3.44	3.53	3.32	3.42	3.41
13	3.80	3.38	3.38	.....	3.28	3.34	.....	.....	.....	.....	.....	.....	.....	.....	.....	.....
16	3.46	3.11	3.49	3.52	3.43	3.28	3.09	3.30	3.47	3.40	3.20	3.22	3.82	3.28	3.16	3.38
18	3.71	3.15	3.20	3.42	3.60	3.18	.....	.....	.....	.....	.....	.....	.....	.....	.....	.....
19	3.28	3.31	3.05	3.73	3.11	3.64	3.26	3.54	3.64	3.55	3.08	3.22	3.40	3.22	3.56	3.55
22	3.42	3.29	3.40	3.24	3.23	3.24	3.32	3.17	3.43	3.56	3.52	2.98	3.79	3.16	3.36	3.45
26	3.42	3.05	3.14	3.26	3.32	3.34	3.30	3.39	3.39	3.22	3.44	3.16	3.48	3.08	3.34	3.60
30	3.65	3.05	3.44	3.34	3.18	3.33	3.35	3.45	3.22	3.20	3.33	2.95	3.64	3.34	3.06	3.07
Dec. 1	3.17	3.22	3.23	.....	.....	.....	.....	.....	.....	.....	.....	.....	.....	.....	.....	.....
4	3.40	3.08	3.56	3.49	3.43	3.39	3.28	3.66	3.34	3.35	2.95	.....	.....	.....	.....	.....
5	3.38	3.10	3.15	3.41	3.39	3.60	3.39	3.23	3.33	3.54	3.55	3.03	3.68	3.45	3.29	3.17
6	3.82	3.37	3.26	3.13	3.38	3.28	2.94	3.12	3.12	3.25	3.15	2.99	3.48	3.43	3.19	3.31

Pair	9.	10.	11.	12.	13.	14.	15.	16.	17.	18.	19.	20.	21.	22.	23.	24.
	"	"	"	"	"	"	"	"	"	"	"	"	"	"	"	"
1911—Dec. 7	3.30	3.03	3.35	2.94	2.97	3.18	3.10	3.15	3.31	3.60	3.76	3.44	3.18	3.28	3.28	3.05
8	3.41	3.53	.....	.....	.....	.....	.....	.....	.....	.....	.....	.....	.....	.....	.....	.....
19	3.42	3.43	3.29	3.39	3.72	3.45	3.20	3.42	3.56	3.11	3.24	3.23	3.25	3.49	3.25	3.55
28	3.23	3.51	3.50	3.25	3.67	2.99	3.13	3.06	3.73	3.65	3.48	3.07	3.13	3.07	3.01	.....
1912—Jan. 4	3.20	3.36	.....	.....	.....	.....	.....	.....	.....	.....	.....	.....	.....	.....	.....	.....

Pair	17.	18.	19.	20.	21.	22.	23.	24.	25.	26.	27.	28.	29.	30.	31.	32.
	"	"	"	"	"	"	"	"	"	"	"	"	"	"	"	"
1912—Jan. 7	3.28	3.13	3.14	3.19	3.08	3.41	3.52	3.44	3.19	3.57	.....	.....	.....	.....	.....	.....
9	3.55	2.94	3.24	2.96	3.14	3.20	3.12	3.31	3.60	3.22	3.26	3.55	3.31	3.26	3.23	3.33
13	3.72	3.16	3.23	2.96	3.20	3.41	3.24	3.36	3.81	3.55	2.86	3.23	3.39	3.45	3.26	3.07
16	3.69	2.93	3.38	2.56	3.14	3.37	3.12	3.33	3.20	3.38	3.01	3.38	3.14	3.21	3.39	3.23
19	3.53	3.25	3.18	2.83	3.11	3.26	3.49	3.14	3.35	3.41	3.19	3.33	3.38	3.37	2.95	3.02
21	3.11	3.01	3.14	2.66	3.18	2.83	3.07	3.08	3.31	3.45	3.24	2.91	2.98	3.63	3.07	3.38
22	3.31	2.81	3.25	2.76	2.96	3.34	3.12	2.82	3.49	2.81	3.03	3.14	3.07	3.45	2.89	3.08
24	3.40	3.15	3.10	2.83	3.05	3.31	2.99	3.32	3.42	3.25	.....	3.17	3.17	3.27	3.04	3.10
25	3.21	.....	.....	.....	.....	.....	.....	.....	.....	.....	.....	.....	.....	.....	.....	.....
27	3.37	3.11	3.37	2.79	3.05	3.22	3.12	3.23	3.28	3.28	3.16	3.28	3.26	3.17	2.78	3.07

Pair	25.	26.	27.	28.	29.	30.	31.	32.	33.	34.	35.	36.	37.	38.	39.	40.
	"	"	"	"	"	"	"	"	"	"	"	"	"	"	"	"
1912—Feb. 4	2.99	3.20	2.96	3.04	3.01	2.94	2.92	3.12	.....	3.03	2.62	3.24	3.70	3.47	3.81	3.57
5	3.60	3.23	3.03	3.06	3.46	2.87	2.63	3.11	2.05	3.20	2.83	3.36	3.22	3.29	3.26	3.12
6	3.15	3.05	2.98	2.80	3.14	3.32	3.08	2.98	2.75	3.05	2.60	3.01	.....	3.11	3.01	3.23
8	3.27	3.29	3.11	3.02	3.28	3.17	3.00	3.11	2.80	3.18	2.57	3.20	3.37	3.03	3.18	3.14
9	3.17	3.28	2.94	3.01	2.65	3.10	2.90	3.06	2.61	3.23	2.89	3.57	3.32	3.09	3.12	3.19
11	3.34	3.20	3.20	3.39	.....	.....	.....	.....	.....	.....	.....	.....	.....	.....	.....	.....
13	3.46	3.35	2.92	3.20	3.38	3.20	2.88	3.19	2.86	3.34	3.02	3.22	3.32	3.18	3.61	3.48
14	3.45	2.76	.....	.....	.....	.....	.....	.....	.....	.....	.....	.....	.....	.....	.....	.....
23	3.39	3.00	3.07	3.04	2.91	2.97	2.90	3.11	2.83	3.05	2.85	2.95	3.18	3.18	3.07	3.20

Pair	33.	34.	35.	36.	37.	38.	39.	40.	41.	42.	43.	44.	45.	46.	47.	48.
	"	"	"	"	"	"	"	"	"	"	"	"	"	"	"	"
1912—Feb. 27	2.46	2.92	2.75	3.17	3.15	3.26	3.45	3.29	3.40	2.96	0.96	3.33	2.34	3.48	3.25	3.15
28	2.50	3.16	2.71	2.86	3.00	2.90	3.30	3.19	3.15	2.82	1.13	3.35	2.57	3.39	3.41	2.99
Mar. 7	3.05	3.45	2.63	3.34	2.93	2.91	3.15	3.00	3.23	3.07	0.99	3.11	2.31	3.54	3.36	3.02
10	2.74	3.05	2.86	3.07	3.02	3.36	3.24*	3.50	3.30	3.05	1.04	3.28	2.21	3.33	3.29	3.17
13	.....	3.45	3.05	3.06	3.14	2.99	3.37	3.44	3.04	2.96	0.29	.....	.....	.....	3.18	3.42
16	3.00	3.34	2.67	3.28	2.93	3.20	3.41	3.17	3.22	3.11	1.10	3.20	2.26	3.38	3.10	3.46
17	2.85	2.92	2.90	3.26	3.30	3.12	3.01	2.96	2.98	3.06	1.19	3.16	2.46	2.77	3.16	3.27

TABLE 47.—*Individual latitudes, visual*—Continued.

Pair	41.	42.	43.	44.	45.	46.	47.	48.	49.	50.	51.	52.	53.	54.	55.	56.
	″	″	″	″	″	″	″	″	″	″	″	″	″	″	″	″
1912—Mar. 22	3.04	2.96	1.10	3.19	2.64	3.04	.....	.....	2.86	2.91	3.30	3.08	2.55	3.32	3.00	2.95
25	2.94	3.15	0.96	3.43	2.27	3.17	3.05	3.03	2.85	3.01	3.14	2.87	2.78	3.03	2.61	3.25
30	.....	.....	.....	.....	.....	.....	.....	3.48	2.80	2.99	3.07	2.98	2.58	3.01	2.66	3.31
31	3.05	2.81	1.07	3.13	2.16	2.80	3.49	3.45	.....	.....	.....	.....	.....	.....	.....	.....
Apr. 3	3.05	2.90	0.95	3.08	2.38	3.02	2.96	3.19	2.66	3.06	3.02	2.82	2.53	3.03	2.69	3.21
8	3.29	3.11	1.06	3.08	1.88	3.25	3.12	2.93	2.67	2.96	3.24	2.99	2.82	3.48	2.45	3.23
9	3.29	3.10	1.26	3.39	2.41	3.19	3.24	2.91	3.01	2.93	3.14	3.15	3.03	3.13	2.53	3.30
10	3.18	3.02	1.12	3.00	2.28	3.33	3.26	2.80	2.63	2.94	3.02	3.06	2.96	3.07	2.85	3.13
11	3.01	3.24	1.00	3.56	2.67	2.99	3.08	3.06	3.09	3.28	3.08	3.21	2.96	3.20	2.67	3.09

Pair	49.	50.	51.	52.	53.	54.	55.	56.	57.	58.	59.	60.	61.	62.	63.	64.
	″	″	″	″	″	″	″	″	″	″	″	″	″	″	″	″
1912—Apr. 19	2.71	2.88	2.82	2.82	2.70	3.05	2.71	3.22	3.14	2.88	3.13	3.24	3.18	3.28	3.33	3.28
23	2.93	3.02	2.97	2.91	2.61	3.04	2.85	3.09	2.95	3.10	3.16	2.84	3.09	3.07	2.85	3.10
27	2.73	3.12	3.35	3.19	2.86	3.04	2.80	3.42	3.38	3.01	3.21	3.18	3.32	3.24	3.27	3.00
May 1	2.75	2.99	3.14	2.96	3.83	3.11	2.73	3.14	3.16	3.18	3.02	2.89	3.25	2.96	2.94	2.98
2	2.69	3.13	3.16	2.79	2.50	2.71	2.94	3.09	3.23	3.19	.....	2.69	3.25	2.93	2.97	3.18
3	2.81	3.13	3.25	2.92	2.97	3.13	2.85	2.87	3.38	3.20	.....	2.83	3.22	3.03	3.01	2.89
4	2.86	2.98	3.00	2.87	2.63	3.13	2.79	3.21	3.17	2.96	3.02	3.23	2.99	3.18	3.15	2.82
9	3.03	2.97	3.08	3.11	2.52	3.29	2.73	3.12	3.00	3.31	2.87	2.84	3.33	3.30	2.96	2.82
10	2.66	3.12	3.10	2.88	2.92	3.08	2.72	3.39	3.27	3.06	3.16	2.92	3.33	3.48	3.14	3.07

Pair	57.	58.	59.	60.	61.	62.	63.	64.	65.	66.	67.	68.	69.	70.	71.	72.
	″	″	″	″	″	″	″	″	″	″	″	″	″	″	″	″
1912—May 13	3.14	3.00	3.14	3.12	.....	.....	.....	.....	.....	.....	.....	.....	.....	.....	.....	.....
18	3.17	2.88	2.92	2.74	3.34	2.86	2.78	3.09	2.72	3.28	3.11	3.35	3.04	2.61	2.63	2.95
20	2.92	2.95	3.11	3.29	3.05	2.91	3.23	3.05	3.01	.....	3.17	3.15	3.30	3.07	2.93	3.07
26	3.18	2.96	3.19	3.04	3.03	3.53	3.46	3.01	2.53	3.21	3.15	3.45	2.89	3.23	2.97	3.44
27	3.29	2.99	3.14	3.13	3.01	3.14	3.20	2.87	2.94	3.02	3.18	3.05	3.32	3.06	3.00	3.25
30	3.66	3.15	3.05	2.85	3.34	3.35	3.13	3.04	2.51	3.12	3.07	3.08	3.17	3.05	3.02	3.19
31	3.15	3.20	3.01	2.90	2.92	3.18	3.18	3.13	2.87	2.88	3.28	3.24	2.97	3.31	3.24	3.38
June 1	3.44	3.22	3.20	3.16	3.13	3.29	2.97	3.11	2.83	3.06	3.21	2.99	3.15	3.13	2.87	3.21
5	3.23	3.00	3.12	3.05	.....	.....	.....	.....	.....	.....	.....	.....	.....	.....	.....	.....
8	3.26	3.13	3.14	3.04	3.21	3.11	3.11	3.36	2.83	3.55	3.60	3.58	3.23	3.15	2.82	3.12

Pair	65.	66.	67.	68.	69.	70.	71.	72.	73.	74.	75.	76.	77.	78.	79.	80.
	″	″	″	″	″	″	″	″	″	″	″	″	″	″	″	″
1912—June 9	3.14	3.27	3.29	3.24	3.29	3.13	3.16	3.22	3.53	3.46	3.22	3.50	3.16	3.18	3.36	3.07
10	2.78	3.19	3.10	2.97	3.04	3.24	2.97	3.22	3.52	3.22	3.09	3.16	2.88	3.35	3.32	3.49
13	2.85	3.08	3.54	3.36	3.35	2.99	2.86	3.35	.....	.....	.....	.....	.....	.....	.....	.....
20	3.02	2.70	3.45	3.19	3.20	.....	3.18	3.14	3.51	3.42	3.41	3.38	3.31	3.20	3.17	3.06
July 2	3.06	3.18	3.12	3.29	3.18	3.35	3.04	3.30	3.54	3.25	3.18	3.43	3.34	3.12	3.10	3.06
3	2.93	3.15	3.16	3.35	3.25	3.15	3.09	3.24	3.48	3.53	3.22	3.36	3.05	3.01	3.09	3.13
5	3.03	2.97	3.33	3.26	3.19	3.16	2.82	3.28	3.51	3.57	3.19	3.33	3.20	3.16	3.29	3.33
7	3.09	3.21	3.26	3.30	3.27	3.35	2.96	3.17	3.47	3.44	3.55	3.32	3.20	3.08	3.31	3.19
8	3.07	2.98	3.29	3.44	3.30	3.07	.....	.....	.....	.....	.....	.....	.....	.....	.....	.....

Pair	73.	74.	75.	76.	77.	78.	79.	80.	81.	82.	83.	84.	85.	86.	87.	88.
	″	″	″	″	″	″	″	″	″	″	″	″	″	″	″	″
1912—July 19	.....	.....	3.42	3.56	3.26	.....	2.95	3.25	2.32	3.33	3.43	3.90	.....	3.53	3.40	.....
25	3.40	3.37	.....	.....	.....	3.28	3.30	3.08	.....	2.93	3.34	.....	.....	.....	2.75	.....
26	.....	3.17	.....	3.35	3.42	2.79	3.31	3.48	.....	3.54	3.23	3.51	2.97	3.34	3.23	.....
30	3.29	3.75	3.36	3.39	3.21	.....	3.22	3.37	2.89	3.27	3.18	3.35	3.13	3.32	3.38	3.51
Aug. 2	3.61	.....	.....	.....	.....	.....	.....	.....	.....	.....	.....	.....	.....	.....	.....	.....
3	2.98	3.57	3.44	3.57	3.18	3.34	3.76	3.05	2.63	3.47	3.45	3.69	.....	3.41	3.54	3.45
5	3.37	3.97	3.34	3.71	3.54	3.46	3.50	3.26	2.37	.....	3.48	3.75	2.74	3.02	3.19	3.53
7	3.78	3.53	3.51	3.47	3.24	3.26	3.15	3.34	2.32	3.52	3.30	3.50	3.28	3.35	3.21	3.37
11	.....	3.57	.....	.....	3.28	3.11	3.22	.....	.....	.....	.....	.....	.....	.....	.....	.....
12	3.27	3.36	3.53	3.38	3.28	3.19	3.28	3.19	2.64	3.46	3.56	3.24	3.54	3.28	3.59	3.97

Pair	81.	82.	83.	84.	85.	86.	87.	88.	89.	90.	91.	92.	93.	94.	95.	96.
	″	″	″	″	″	″	″	″	″	″	″	″	″	″	″	″
1912—Aug. 20	2.48	3.12	3.38	3.51	3.74	3.12	3.34	3.20	.....	.....	.....	.....	.....	.....	.....	.....
23	2.48	3.98	3.48	3.63	2.90	3.48	4.14	3.19	.....	.....	.....	.....	.....	.....	.....	.....
24	2.41	3.53	3.42	3.72	3.42	3.48	3.54	3.41	3.38	3.32	3.67	3.62	3.45	2.88	3.32	3.24
27	2.72	.....	.....	.....	.....	.....	.....	.....	.....	.....	.....	.....	.....	.....	.....	.....
29	2.63	3.52	3.24	3.63	3.51	.....	.....	.....	.....	.....	.....	.....	.....	.....	.....	.....
31	2.67	3.56	3.44	3.35	3.17	3.50	3.60	3.24	3.53	3.29	3.41	3.48	3.44	3.10	.....	.....
Sept. 5	2.39	3.74	3.14	3.42	3.23	3.44	3.39	3.24	3.28	3.26	3.48	3.43	3.36	2.88	3.22	3.45
6	2.49	3.40	3.32	4.02	3.39	3.25	3.28	3.38	.....	.....	.....	.....	.....	.....	.....	.....
8	.....	.....	.....	.....	.....	.....	.....	.....	3.55	3.48	3.17	3.66	3.38	3.16	3.09	3.34
9	2.30	3.32	3.36	3.41	3.18	3.37	3.59	.....	3.36	3.30	3.57	3.08	3.15	2.93	3.18	3.34
10	2.48	3.58	3.46	3.51	3.63	3.53	3.64	.....	2.53	3.51	3.48	3.48	3.51	2.82	3.22	3.24
12	2.48	3.43	3.50	3.57	3.54	.....	3.54	3.54	3.59	3.83	3.33	3.32	3.44	3.00	3.17	3.58
17	2.61	3.42	3.45	3.59	2.32	3.42	.....	3.37	3.60	3.45	3.47	.....	.....	.....	.....	.....
20	2.50	3.64	3.43	3.63	3.31	3.48	3.19	3.36	3.49	3.51	3.39	3.44	3.56	2.77	3.11	3.47

TABLE 47.—*Individual latitudes, visual*—Continued.

Pair	89.	90.	91.	92.	93.	94.	95.	96.	1.	2.	3.	4.	5.	6.	7.	8.
	″	″	″	″	″	″	″	″	″	″	″	″	″	″	″	″
1912—Sept. 28	3.19	3.42	3.30	3.32	3.81	2.70	2.97	3.49	.....	.....	.....	.....	.....	.....	.....	.....
30	3.43	3.67	3.47	3.27	3.30	3.01	3.16	3.28	3.61	3.33	3.44	3.29	3.71	3.34	4.07	3.33
Oct. 1	.....	3.54	3.39	3.40	3.54	3.12	3.21	3.27	3.52	3.46	3.57	3.46	3.56	3.27	4.12	3.65
2	3.43	3.44	3.34	3.60	3.60	3.19	3.10	3.58	3.52	3.48	3.37	3.36	3.51	3.69	4.02	3.52
3	3.28	3.61	3.33	.....	.....	.....	.....	.....	.....	.....	.....	.....	.....	.....	.....	.....
4	.....	.....	.....	.....	.....	2.70	3.21	3.54	3.63	3.24	3.38	3.26	3.41	3.09	3.67	3.40
5	3.42	3.62	3.31	3.64	3.58	2.83	3.20	3.39	3.89	3.39	3.36	3.53	3.74	3.66	3.81	3.36
6	.....	3.45	3.64	3.38	3.48	3.08	3.10	3.48	3.40	3.48	3.54	3.56	3.40	3.44	3.89	3.50
7	3.47	3.60	3.58	3.27	3.50	2.93	2.91	3.61	3.54	3.35	3.29	3.52	3.37	3.70	4.17	3.47
9	3.43	.....	.....	.....	.....	.....	.....	.....	.....	.....	.....	.....	.....	.....	.....	.....
11	3.38	3.38	3.34	3.49	3.63	2.97	3.30	.....	.....	.....	.....	.....	.....	.....	.....	.....
14	3.36	3.61	.....	.....	.....	.....	.....	.....	.....	.....	.....	.....	.....	.....	.....	.....
15	3.52	3.53	3.44	3.46	3.51	2.94	3.22	3.46	3.77	3.17	3.33	.....	3.42	3.59	3.75	3.65
16	3.29	3.48	3.20	3.23	3.22	2.87	2.92	3.52	3.51	3.21	3.38	3.48	3.38	3.40	4.10	3.30
20	3.37	3.37	3.52	3.69	3.46	3.03	3.22	3.52	3.64	3.21	3.63	3.51	3.40	3.33	3.95	3.52
26	3.37	3.47	3.52	3.31	3.44	3.13	3.18	3.45	3.74	3.51	3.74	3.98	3.61	3.53	4.08	3.33
27	2.90	3.72	3.50	3.84	3.47	3.20	3.25	3.47	3.68	3.39	3.21	3.55	3.46	3.13	3.63	3.38
28	3.19	3.53	3.59	3.48	3.35	2.93	3.12	3.60	3.71	.....	.....	.....	.....	.....	.....	.....
29	3.42	3.46	3.31	3.57	3.43	3.01	3.16	3.30	3.70	3.22	3.59	3.46	3.37	3.40	3.93	3.64
30	3.61	3.58	3.39	3.36	3.57	3.11	3.08	3.48	3.52	3.39	3.58	3.57	3.76	3.58	4.17	3.50
Nov. 1	3.59	3.67	3.44	.....	.....	.....	.....	.....	.....	.....	.....	.....	.....	.....	.....	.....

Pair	1.	2.	3.	4.	5.	6.	7.	8.	9.	10.	11.	12.	13.	14.	15.	16.
	″	″	″	″	″	″	″	″	″	″	″	″	″	″	″	″
1912—Nov. 3	3.69	3.44	3.12	3.09	3.60	3.60	3.56	3.22	3.32	3.52	3.32	3.58	3.79	2.90	3.75	3.22
5	3.02	.....	3.37	.....	.....	.....	.....	.....	.....	.....	.....	.....	.....	.....	.....	.....
10	3.57	3.37	3.51	3.69	3.48	3.56	3.87	3.01	3.50	3.45	3.53	3.39	3.45	3.52	3.20	3.60
11	3.46	3.38	3.40	3.57	3.25	3.43	3.88	3.47	3.05	3.52	3.54	3.56	3.92	3.27	3.43	3.01
12	3.55	3.37	.....	.....	.....	.....	.....	.....	.....	.....	.....	.....	.....	.....	.....	.....
16	3.33	3.18	3.28	3.40	3.28	3.04	4.00	3.30	3.37	3.53	3.45	3.38	3.81	3.32	2.99	3.31
18	3.66	3.51	3.30	3.29	3.53	3.29	3.96	3.17	3.31	3.62	3.50	3.45	3.62	3.24	3.10	3.23
19	3.36	3.56	3.35	3.33	3.59	3.14	3.98	3.65	3.27	3.62	3.28	3.55	3.95	3.52	3.20	3.25
20	3.48	3.53	3.45	3.57	3.47	3.29	4.04	3.44	3.53	3.35	3.21	3.21	3.63	3.58	3.33	3.40
22	3.47	3.31	3.31	3.65	3.36	3.54	4.06	3.66	3.35	3.72	3.42	.....	3.73	3.58	3.33	3.51
25	3.54	3.33	3.45	3.41	3.60	.....	.....	3.28	3.69	3.58	.....	.....	.....	.....	.....	.....
26	3.91	3.21	3.26	3.62	3.13	3.33	3.97	3.51	3.44	3.71	3.66	.....	.....	.....	.....	.....
30	3.64	3.51	3.50	3.43	3.69	3.23	4.14	3.30	3.51	3.70	3.41	3.30	4.04	3.53	3.08	3.35
Dec. 3	3.70	3.39	3.51	3.79	3.74	3.13	3.98	3.46	3.15	3.32	3.12	3.53	3.76	3.39	3.38	3.40
6	3.77	3.06	3.42	3.73	4.02	3.53	3.58	3.12	3.54	3.80	3.55	3.50	3.70	3.29	3.58	3.33

Pair	9.	10.	11.	12.	13.	14.	15.	16.	17.	18.	19.	20.	21.	22.	23.	24.
	″	″	″	″	″	″	″	″	″	″	″	″	″	″	″	″
1912—Dec. 7	3.51	3.53	.....	.....	.....	.....	.....	.....	.....	.....	.....	.....	.....	.....	.....	.....
9	3.51	3.55	.....	3.39	.....	.....	3.33	3.62	3.79	3.31	3.44	3.10	3.20	3.46	3.35	3.30
12	3.47	3.88	3.65	3.49	3.91	3.17	3.20	3.52	3.56	3.63	3.54	3.18	3.01	3.68	3.50	3.54
13	3.54	3.49	3.46	3.35	3.67	3.49	3.18	3.62	3.29	3.21	3.37	3.28	3.69	3.38	3.32	3.47
14	.....	3.59	3.75	3.49	3.66	3.61	3.18	3.44	.....	.....	3.70	.....	3.48	3.73	3.58	.....
15	3.39	3.46	3.30	3.16	3.77	.....	.....	.....	.....	.....	.....	.....	.....	.....	.....	.....
20	3.64	3.55	3.49	3.44	3.84	3.09	3.45	3.44	3.54	3.18	3.35	3.33	3.40	3.49	3.24	3.49
21	.....	.....	.....	.....	3.49	3.55	.....	3.48	3.75	.....	3.93	3.16	3.31	4.13	3.63	2.95
22	.....	3.38	.....	.....	.....	.....	.....	.....	.....	.....	.....	.....	.....	.....	.....	.....
1913—Jan. 1	3.52	3.71	3.33	3.87	3.59	3.46	2.90	.....	3.31	3.31	3.48	3.06	3.45	3.57	3.31	3.38
4	3.56	3.58	3.16	3.05	3.29	3.11	.....	3.48	3.18	3.37	3.41	2.97	3.47	3.87	3.20	3.14

Pair	17.	18.	19.	20.	21.	22.	23.	24.	25.	26.	27.	28.	29.	30.	31.	32.
	″	″	″	″	″	″	″	″	″	″	″	″	″	″	″	″
1913—Jan. 9	3.41	3.41	3.62	3.11	3.24	3.42	3.33	.....	3.54	3.47	3.31	3.64	3.53	3.65	3.17	3.23
13	3.47	3.32	3.48	2.92	3.37	3.59	3.09	3.36	3.32	3.48	3.38	3.43	3.63	3.66	3.38	3.27
14	3.53	3.16	3.72	3.31	3.38	3.69	3.36	3.22	3.59	3.36	3.09	3.41	3.32	3.56	3.49	3.29
15	3.56	3.09	3.37	3.08	3.31	3.40	.....	.....	.....	.....	.....	.....	.....	.....	.....	.....
18	3.78	3.42	4.30	3.56	3.77	3.22	3.51	3.01	3.87	3.27	3.55	3.27	3.13	3.12	3.81	3.24
21	3.58	3.45	3.73	3.13	3.52	3.61	3.40	3.43	3.73	3.56	3.36	3.56	.....	3.70	3.27	3.36
22	3.96	3.40	3.44	3.34	3.33	3.27	2.90	3.27	3.25	3.20	3.30	3.63	3.26	3.62	3.12	3.38
25	3.59	3.29	3.59	3.22	3.19	3.23	3.34	3.31	3.46	3.13	.....	.....	.....	.....	.....	3.07
26	3.50	3.14	3.21	3.30	3.70	3.37	3.40	3.29	3.65	.....	.....	.....	.....	.....	.....	.....
30	3.38	3.06	3.30	3.15	3.20	3.65	3.67	3.42	3.52	.....	2.95	.....	4.63	3.47	3.17	3.92

Pair	25.	26.	27.	28.	29.	30.	31.	32.	33.	34.	35.	36.	37.	38.	39.	40.
	″	″	″	″	″	″	″	″	″	″	″	″	″	″	″	″
1913—Feb. 1	3.53	3.60	3.85	3.82	3.59	3.67	3.69	3.75	3.05	3.26	3.08	3.38	3.51	3.49	3.52	3.15
4	3.45	3.34	3.26	3.53	3.48	3.48	3.26	3.39	3.26	3.34	2.98	3.40	3.64	3.52	3.58	3.74
6	3.66	3.22	3.60	3.35	3.68	.....	3.42	3.03	3.01	3.14	2.77	3.26	3.45	3.66	3.73	3.58
7	3.26	3.75	3.36	3.52	3.43	3.75	3.69	3.46	3.18	3.86	2.52	3.89	3.08	3.60	3.22	3.87
8	3.24	3.41	3.41	3.14	3.79	.....	3.23	3.17	3.14	.....	3.39	3.50	3.68	3.62	3.63	3.34
12	3.61	3.55	3.30	3.38	3.62	3.31	3.10	3.12	3.19	3.55	3.18	3.75	3.57	3.68	3.76	3.31
13	3.42	3.58	3.36	3.40	3.28	3.50	3.11	3.19	3.08	3.19	3.06	3.04	3.47	3.21	3.67	3.42
14	3.26	3.12	2.93	3.08	3.02	3.26	2.89	3.20	3.03	3.32	3.12	3.20	3.31	3.32	3.29	3.84
18	3.79	3.48	3.35	3.47	3.65	3.58	3.16	3.36	2.86	3.56	3.06	3.52	3.28	3.41	3.55	3.58
21	.....	3.78	.....	.....	.....	.....	.....	.....	.....	.....	.....	.....	.....	.....	.....	.....
23	3.38	3.64	3.55	3.22	3.22	3.52	3.32	3.51	3.02	3.28	.....	.....	.....	.....	.....	.....

TABLE 47.—*Individual latitudes, visual*—Continued.

Pair	33.	34.	35.	36.	37.	38.	39.	40.	41.	42.	43.	44.	45.	46.	47.	48.
	″	″	″	″	″	″	″	″	″	″	″	″	″	″	″	″
1913—Feb. 25	3.20	3.08	3.05	3.90	3.58	3.63	3.32	3.62	3.52	3.41	1.15	3.38	2.48	3.87	3.92	3.29
28	2.87	.....	2.88	3.25	3.34	3.55	3.49	3.29	3.54	3.36	1.07	3.72	2.46	.....	.....	.....
Mar. 2	.....	3.31	3.03	.....	3.65	3.43	3.81	3.54	3.45	3.15	1.09	3.63	2.75	3.33	3.49	3.43
5	3.30	3.20	3.01	3.23	3.31	3.33	3.47	3.47	3.48	.....	1.25	3.65	2.59	3.45	3.70	3.49
6	3.32	3.44	3.45	.....	.....	.....	3.28	3.54	3.99	3.40	1.47	3.64	2.46	3.42	.....	.....
7	3.24	3.13	3.03	3.22	3.28	3.42	3.41	3.51	3.70	3.33	1.21	3.74	.....	.....	.....	.....
9	.....	3.24	2.87	3.32	3.48	.....	3.51	3.28	.....	.....	.....	.....	.....	.....	.....	.....
11	.....	3.36	3.05	3.11	3.71	3.22	3.46	3.42	3.34	3.00	1.38	3.49	2.63	3.18	3.55	3.35
12	2.85	3.25	3.07	.....	.....	.....	.....	.....	.....	.....	.....	.....	.....	.....	.....	.....
17	3.22	3.41	3.37	3.03	3.40	3.46	3.70	3.35	3.45	3.29	1.65	3.43	2.60	3.38	3.68	3.44
18	2.93	3.45	3.06	3.28	3.44	3.52	3.59	3.46	3.25	3.35	1.18	.....	2.58	3.61	3.32	3.16
20	3.04	3.15	3.07	3.27	3.42	3.38	3.13	3.51	3.26	.....	1.50	3.57	2.42	3.66	3.24	3.29

Pair	41.	42.	43.	44.	45.	46.	47.	48.	49.	50.	51.	52.	53.	54.	55.	56.
	″	″	″	″	″	″	″	″	″	″	″	″	″	″	″	″
1913—Mar. 22	3.26	3.15	1.24	3.30	2.23	3.39	3.29	3.20	3.38	3.02	3.74	2.98	3.29	3.36	3.12	3.32
27	3.08	2.82	1.39	3.35	2.81	3.15	3.29	3.37	3.46	3.22	3.44	3.10	3.03	3.54	2.82	3.30
28	3.33	2.99	1.22	3.14	2.51	3.49	3.13	3.31	3.05	2.90	3.12	3.42	3.48	3.49	3.11	3.03
31	3.51	.....	.....	.....	.....	.....	3.20	3.10	2.82	3.17	3.32	3.11	2.63	3.50	2.98	3.45
Apr. 1	3.16	2.91	1.33	3.35	2.37	3.25	3.12	3.26	3.40	2.86	3.17	3.57	3.18	3.43	3.07	2.86
5	3.53	.....	1.16	3.51	.....	3.21	3.10	2.98	3.13	3.15	3.64	3.12	3.08	3.57	2.56	3.76
6	3.49	3.25	0.98	3.17	2.35	3.25	3.32	3.10	2.90	3.09	3.57	2.80	2.95	3.21	3.21	.....
8	3.23	3.12	1.27	3.45	2.28	3.15	3.70	3.20	2.92	3.29	3.38	2.81	2.87	3.40	3.14	3.49

Pair	49.	50.	51.	52.	53.	54.	55.	56.	57.	58.	59.	60.	61.	62.	63.	64.
	″	″	″	″	″	″	″	″	″	″	″	″	″	″	″	″
1913—Apr. 17	2.58	3.22	3.36	3.15	3.03	3.19	3.15	3.60	3.66	3.53	3.34	3.20	3.42	3.28	3.22	3.20
18	2.94	3.07	.....	.....	.....	.....	.....	.....	.....	.....	.....	.....	.....	.....	.....	.....
19	3.25	3.12	3.61	3.42	2.93	3.55	3.16	3.51	3.70	3.15	3.56	3.43	3.71	.....	3.15	3.36
20	2.93	3.25	3.23	3.19	2.95	3.32	3.12	3.32	3.31	3.00	3.27	3.09	3.50	3.43	3.13	3.36
21	2.89	3.06	3.30	3.34	3.02	3.37	2.87	3.21	3.35	2.91	3.32	3.18	3.46	.....	3.04	.....
22	3.00	3.24	3.44	3.02	2.83	3.28	2.80	3.42	3.30	3.28	3.30	2.92	3.48	3.38	3.11	3.10
24	2.59	2.98	3.06	3.12	3.29	3.33	3.12	3.48	3.04	3.10	3.38	3.19	3.31	.....	.....	.....
25	3.05	3.18	3.38	3.19	2.95	3.09	2.86	3.05	3.46	3.18	3.20	3.16	3.14	3.19	3.09	3.21
29	3.14	3.27	3.53	3.43	2.90	3.08	2.84	3.35	3.24	3.02	3.51	3.01	3.52	.....	3.29	.....
May 1	2.89	2.97	3.58	3.19	2.56	3.31	3.00	3.21	3.43	3.31	3.36	3.55	3.53	3.43	3.28	3.13
2	.....	3.13	3.58	.....	.....	2.98	2.79	2.97	3.36	3.08	3.17	3.20	2.94	3.19	3.61	3.39
3	2.88	3.11	3.66	3.28	3.09	3.45	2.82	3.14	3.32	3.32	3.08	3.28	2.99	3.13	.....	3.44
8	.....	3.09	3.38	3.05	2.56	3.21	.....	.....	3.18	3.01	3.22	3.06	3.09	3.28	3.22	3.14
10	2.82	3.03	3.16	3.01	.....	3.27	2.63	3.01	3.06	3.34	3.21	2.75	3.20	3.46	3.48	3.18
11	3.11	3.19	3.25	3.11	2.99	3.13	2.95	3.16	3.43	3.20	3.25	3.15	3.50	3.29	3.05	3.43

Pair	57.	58.	59.	60.	61.	62.	63.	64.	65.	66.	67.	68.	69.	70.	71.	72.
	″	″	″	″	″	″	″	″	″	″	″	″	″	″	″	″
1913—May 19	3.31	2.98	3.13	3.08	3.19	3.43	3.26	3.18	.....	.....	.....	.....	.....	.....	.....	.....
20	3.12	3.02	3.02	3.06	3.17	3.23	3.20	3.28	3.17	3.30	3.25	3.23	3.24	3.15	.....	.....
24	3.15	3.16	3.37	3.17	3.42	3.47	3.51	2.98	3.08	2.64	3.36	3.20	3.22	2.83	2.94	3.36
31	3.22	2.73	3.26	2.84	3.18	3.23	3.06	3.12	2.86	3.43	3.21	3.29	3.08	3.33	3.81	3.42
June 2	3.23	3.04	3.28	2.92	3.29	3.05	3.10	2.87	3.04	3.01	3.30	3.13	3.20	2.78	2.93	3.24
5	3.21	3.01	2.95	2.94	3.17	3.30	3.21	2.95	2.60	2.92	3.09	3.26	3.01	2.94	2.78	2.83
6	3.25	3.16	3.17	3.00	3.20	3.04	2.88	3.10	2.88	2.99	3.14	3.17	2.88	3.14	3.07	3.20

Pair	65.	66.	67.	68.	69.	70.	71.	72.	73.	74.	75.	76.	77.	78.	79.	80.
	″	″	″	″	″	″	″	″	″	″	″	″	″	″	″	″
1913—June 9	2.95	3.43	3.25	3.09	3.28	3.21	2.81	3.37	.....	.....	.....	.....	.....	.....	.....	.....
13	3.06	2.71	3.16	3.23	3.19	3.83	3.14	2.99	3.24	3.28	3.31	3.22	3.17	3.12	3.23	3.27
17	2.94	3.16	3.09	3.17	3.26	3.04	2.60	3.26	3.39	3.08	.....	3.43	3.18	.....	3.30	3.23
18	2.85	.....	3.00	3.02	.....	2.83	2.84	3.27	.....	3.13	3.10	2.99	.....	.....	.....	.....
28	2.86	3.22	3.42	3.26	3.02	2.84	3.00	2.98	3.24	3.00	3.18	.....	.....	.....	.....	.....
29	2.91	2.92	3.27	3.12	3.17	3.07	2.82	3.01	3.64	3.36	3.83	3.42	3.00	3.12	3.16	3.26
30	2.91	3.13	3.31	3.23	3.03	3.03	.....	3.12	3.38	3.33	3.35	3.26	3.01	3.13	3.00	2.98
July 3	2.93	2.93	3.21	3.23	3.00	2.99	2.78	3.26	3.35	3.07	3.08	3.09	2.95	3.12	2.96	2.95
7	3.02	2.82	3.44	3.04	3.07	3.13	2.92	.....	3.45	3.26	2.97	3.30	2.81	3.26	3.20	3.20
8	2.96	3.09	3.28	3.25	3.13	2.94	2.75	3.20	3.40	3.07	3.41	3.44	3.11	2.89	3.27	3.04

Pair	73.	74.	75.	76.	77.	78.	79.	80.	81.	82.	83.	84.	85.	86.	87.	88.
	″	″	″	″	″	″	″	″	″	″	″	″	″	″	″	″
1913—July 10	3.41	3.04	.....	.....	.....	.....	.....	.....	.....	.....	.....	.....	.....	.....	.....	.....
11	.....	3.28	.....	.....	.....	.....	.....	.....	.....	.....	.....	.....	.....	.....	.....	.....
13	3.25	3.01	.....	.....	.....	.....	.....	.....	.....	.....	.....	.....	.....	.....	.....	.....
14	3.26	.....	2.75	3.14	.....	.....	.....	.....	.....	.....	.....	.....	.....	.....	.....	.....
16	3.46	3.18	3.12	3.11	3.04	3.22	.....	2.91	2.38	3.25	3.10	2.72	2.95	3.21	3.29	3.48
18	3.55	3.35	3.43	3.53	3.25	2.95	2.98	2.96	2.47	3.35	3.26	3.27	3.21	3.42	3.22	3.01
21	3.46	3.16	3.13	3.04	3.22	3.29	3.11	.....	2.27	3.32	3.10	3.28	2.94	3.41	3.46	3.26
22	3.34	3.27	3.35	3.40	3.04	3.11	3.05	.....	.....	.....	.....	.....	.....	.....	.....	.....
25	3.49	3.05	3.44	3.16	3.15	3.10	3.22	3.17	2.45	3.34	3.12	3.06	3.13	3.25	3.52	2.94
26	3.67	3.24	3.40	3.43	3.11	3.06	3.25	2.97	2.53	3.40	3.29	3.48	3.11	3.22	2.97	.....
Aug. 2	3.30	3.27	3.43	3.29	3.00	3.07	3.10	3.24	2.37	3.18	3.25	3.56	2.90	3.04	2.96	3.40
4	.....	3.31	3.16	3.27	3.28	3.19	2.92	2.92	2.44	2.99	3.48	3.37	3.23	3.46	3.32	3.00
5	3.40	3.27	3.19	3.31	3.14	3.10	3.08	3.07	2.47	3.32	.....	3.26	3.02	3.33	3.21	2.98
7	3.53	3.27	3.07	3.20	3.15	2.99	2.98	2.86	2.59	3.27	3.60	3.09	3.10	3.31	3.27	2.98
11	3.22	3.32	3.56	2.99	2.97	2.85	3.09	3.12	2.50	3.38	3.12	3.42	2.79	.....	.....	.....

TABLE 47.—*Individual latitudes, visual*—Continued.

Pair	81.	82.	83.	84.	85.	86.	87.	88.	89.	90.	91.	92.	93.	94.	95.	96.
	″	″	″	″	″	″	″	″	″	″	″	″	″	″	″	″
1913—Aug. 14	2.42	3.42	3.03	3.18	2.99	.....	.....	.....	.....	.....	.....	.....	.....	.....	.....	.....
15	2.14	3.31	3.23	3.34	3.01	3.37	3.15	3.35	3.00	3.29	3.39	3.26	3.07	2.45	2.71	3.36
16	2.13	3.18	3.08	3.29	3.05	3.44	3.33	3.08	3.00	2.95	2.73	3.17	3.09	2.47	2.64	3.26
19	2.33	3.29	2.93	3.34	2.94	3.48	3.23	3.04	3.31	3.43	2.97	3.25	3.19	2.76	2.81	3.23
20	2.36	3.36	3.16	3.14	3.11	3.54	3.36	3.06	3.22	3.11	3.14	3.28	3.11	2.72	2.52	3.23
24	2.59	3.26	3.22	3.31	3.09	3.32	3.31	3.33	3.06	3.48	3.02	2.9	3.54	2.74	2.98	3.07
25	2.74	3.20	3.20	2.97	3.01	3.32	3.45	3.19	3.14	3.07	2.84	3.14	3.01	2.65	2.92	3.27
Sept. 4	2.26	3.35	3.12	3.37	3.03	3.31	2.97	3.35	3.16	3.38	3.17	2.97	3.08	2.80	2.54	3.13
5	2.27	3.13	3.27	3.20	2.95	3.29	3.19	3.12	3.12	3.10	3.01	3.07	.....	2.59	2.72	3.11
9	2.51	3.11	3.41	3.65	2.92	3.56	3.18	3.03	2.98	3.11	2.96	2.91	3.14	2.71	2.85	3.34
10	2.01	3.07	2.98	3.18	3.04	3.40	2.97	2.91	3.51	3.21	2.76	3.29	3.29	2.85	2.53	3.37
11	2.41	3.02	2.98	3.09	3.04	3.28	3.24	3.16	.....	.....	.....	.....	.....	.....	.....	.....
22	2.58	3.21	2.91	3.26	3.21	3.12	3.21	3.09	3.20	3.06	3.47	3.52	3.09	2.81	2.96	3.10

Pair	89.	90.	91.	92.	93.	94.	95.	96.	1.	2.	3.	4.	5.	6.	7.	8.
	″	″	″	″	″	″	″	″	″	″	″	″	″	″	″	″
1913—Sept. 23	3.07	3.25	3.30	3.46	3.35	2.74	3.12	3.21	3.37	2.91	3.11	3.34	2.89	3.16	.....	2.92
24	3.04	3.19	3.16	3.44	2.89	2.54	3.03	3.20	3.56	2.96	3.27	3.27	3.25	2.97	3.55	3.16
25	3.06	3.21	3.01	.....	3.09	2.69	3.51	3.15	3.61	3.12	3.35	3.33	3.29	2.96	3.58	3.03
27	3.18	3.45	3.14	3.15	2.84	2.63	2.66	3.05	3.15	3.02	3.02	3.22	3.08	2.95	3.74	3.33
28	3.04	3.25	3.14	3.02	3.09	2.76	2.82	.....	.....	.....	.....	.....	.....	.....	.....	.....
Oct. 3	3.18	3.42	2.88	3.08	3.14	2.83	2.85	3.33	3.47	3.35	3.11	3.42	3.10	3.18	3.60	3.55
4	2.97	3.57	3.08	3.00	3.06	2.79	2.98	3.56	3.39	3.01	3.20	3.54	3.25	3.17	3.79	3.00
12	3.50	3.12	3.23	3.40	3.36	2.70	2.63	.....	.....	.....	.....	.....	.....	.....	.....	.....
13	3.27	3.25	3.41	3.17	3.56	2.90	2.93	3.30	3.55	3.13	3.13	3.31	3.24	3.09	3.78	3.00
14	3.48	3.44	2.90	3.31	3.06	2.80	3.13	3.24	3.37	3.22	3.08	3.35	3.32	3.16	3.86	3.34
16	2.91	3.53	3.07	3.31	3.25	3.06	2.92	3.25	3.13	3.02	3.63	3.50	3.33	3.21	4.03	3.03
22	2.98	3.23	3.14	3.33	3.17	2.91	2.71	3.34	3.54	3.07	3.17	3.36	3.27	3.02	3.79	3.12
26	3.28	3.27	3.14	3.47	3.46	2.62	3.10	3.02	3.51	3.11	3.35	3.21	3.61	3.03	3.72	3.22
27	3.04	3.49	.....	.....	.....	.....	.....	.....	.....	.....	.....	.....	.....	.....	.....	.....
29	.....	3.26	3.26	3.03	3.22	2.58	.....	.....	.....	.....	.....	.....	.....	.....	.....	.....
Nov. 1	3.17	3.30	.....	3.33	3.36	2.55	2.93	3.51	3.30	2.62	3.23	3.44	3.08	3.14	3.53	3.30

Pair	1.	2.	3.	4.	5.	6.	7.	8.	9.	10.	11.	12.	13.	14.	15.	16.
	″	″	″	″	″	″	″	″	″	″	″	″	″	″	″	″
1913—Nov. 4	3.50	3.51	3.53	3.42	3.11	3.19	3.73	3.35	3.22	3.31	3.23	3.27	3.56	3.19	2.98	3.58
5	3.28	3.37	3.55	3.16	3.40	3.01	3.93	3.12	3.25	3.11	3.05	2.88	3.29	2.95	3.55	3.22
6	3.55	3.26	3.25	3.50	3.19	3.36	3.75	3.07	3.11	3.49	3.13	3.28	3.56	2.89	2.84	3.50
17	.....	3.02	3.32	3.38	3.90	3.19	3.52	3.06	3.41	3.38	2.99	3.57	3.43	3.15	3.17	3.13
21	3.40	3.13	3.33	3.19	3.42	3.05	3.76	3.38	3.53	3.49	3.22	3.45	3.59	3.35	3.33	3.45
22	3.45	3.16	3.54	3.34	.....	3.21	3.80	3.24	3.60	3.40	3.25	3.51	3.66	3.19	3.04	3.24
Dec. 5	3.44	3.20	3.08	3.22	3.35	3.52	3.71	3.22	3.15	3.56	3.34	3.38	3.70	3.13	3.15	3.51

Pair	9.	10.	11.	12.	13.	14.	15.	16.	17.	18.	19.	20.	21.	22.	23.	24.
	″	″	″	″	″	″	″	″	″	″	″	″	″	″	″	″
1913—Dec. 9	3.18	3.45	3.24	3.45	3.67	3.10	3.21	3.32	3.49	3.28	3.35	3.10	3.46	3.15	3.34	3.26
11	3.27	3.54	3.44	3.61	3.80	3.47	.....	3.17	3.66	3.15	3.50	3.04	3.52	3.37	3.35	3.28
12	3.14	3.47	3.51	3.76	.....	.....	.....	.....	.....	.....	.....	.....	.....	.....	.....	.....
13	2.98	3.36	3.33	3.63	3.64	3.98	3.07	3.43	3.51	3.19	3.53	3.08	3.44	3.67	3.14	3.08
15	3.21	3.33	3.35	3.50	3.59	3.09	3.15	3.39	3.51	3.36	3.33	2.85	3.40	3.36	3.15	3.23
18	3.21	3.59	3.33	3.45	3.58	3.53	3.26	3.14	3.53	3.34	3.75	3.08	3.62	3.15	3.27	3.43
19	3.18	3.44	3.29	3.51	3.72	3.27	2.99	3.49	3.50	3.18	3.50	3.07	3.14	3.33	3.23	3.32
22	.....	3.45	3.67	3.58	3.68	3.19	3.10	.....	3.24	.....	.....	.....	.....	.....	.....	.....
27	3.33	3.46	3.39	3.45	3.95	3.07	3.11	3.50	3.66	3.40	3.64	2.97	3.31	3.38	3.43	3.12
29	3.31	3.59	3.62	3.45	3.62	3.24	3.18	3.24	3.85	3.31	3.60	3.18	3.26	3.30	2.93	3.72
1914—Jan. 1	3.43	3.53	3.33	3.29	.....	.....	.....	.....	.....	.....	.....	.....	.....	.....	.....	.....

Pair	17.	18.	19.	20.	21.	22.	23.	24.	25.	26.	27.	28.	29.	30.	31.	32.
	″	″	″	″	″	″	″	″	″	″	″	″	″	″	″	″
1914—Jan. 6	3.51	3.38	3.24	2.97	3.32	3.46	.....	.....	.....	.....	.....	.....	.....	.....	.....	.....
11	4.01	3.42	3.66	2.59	3.04	3.08	3.32	3.60	3.94	3.47	3.30	.....	3.41	3.75	3.66	.....
18	.....	3.00	.....	2.71	.....	.....	.....	.....	.....	.....	.....	.....	.....	.....	.....	.....
25	3.46	3.08	3.61	3.37	3.42	3.26	3.55	3.13	3.70	3.52	3.56	3.65	3.56	3.57	.....	.....
26	3.43	3.24	3.55	3.04	3.35	3.45	.....	3.11	3.71	.....	.....	.....	.....	.....	.....	.....
29	3.46	3.53	3.67	3.43	3.13	3.43	3.20	3.27	3.35	3.16	3.17	3.49	3.32	3.54	3.22	3.21

Pair	25.	26.	27.	28.	29.	30.	31.	32	33.	34.	35.	36.	37.	38.	39.	40.
	″	″	″	″	″	″	″	″	″	″	″	″	″	″	″	″
1914—Feb. 1	3.54	3.60	3.27	3.14	3.18	2.99	3.00	.....	2.57	3.41	3.40	3.05	3.59	3.05	3.32	3.57
2	3.44	3.32	3.45	3.43	.....	3.58	3.20	3.14	2.74	3.39	3.00	3.46	3.18	.....	3.49	3.44
7	3.53	3.26	.....	3.94	3.11	3.27	.....	3.33	3.40	.....	3.69	4.12	3.42	3.72	4.02	3.51
8	.....	3.71	3.19	.....	.....	.....	3.39	3.57	.....	.....	.....	.....	.....	.....	.....	.....
9	2.37	2.94	3.21	3.09	3.34	3.29	3.09	3.15	3.10	3.86	3.22	3.52	3.43	3.46	3.39	3.50
11	3.64	3.31	3.27	3.24	3.43	3.80	3.36	3.29	2.63	3.73	2.96	3.66	3.46	3.47	3.88	3.65
15	3.76	3.37	.....	.....	.....	.....	.....	.....	.....	.....	.....	.....	.....	.....	.....	.....
16	3.57	3.63	3.19	3.23	3.49	3.61	3.26	3.35	3.02	3.28	3.01	3.39	3.46	3.61	3.89	3.07
17	3.85	3.65	3.26	4.03	3.48	3.38	3.14	3.19	3.16	3.63	3.32	3.82	3.76	3.49	3.65	3.71
21	3.48	3.38	3.10	.....	3.29	3.64	3.19	3.22	3.21	3.65	3.13	3.52	3.58	3.55	3.92	3.47
24	3.39	3.64	3.29	3.42	3.60	3.64	3.47	3.47	3.19	3.19	.....	3.42	3.59	3.29	3.29	3.80

TABLE 47.—*Individual latitudes, visual*—Continued.

Pair	33.	34.	35.	36.	37.	38.	39.	40.	41.	42.	43.	44.	45.	46.	47.	48.
	″	″	″	″	″	″	″	″	″	″	″	″	″	″	″	″
1914—Feb. 26	2.92	3.31	3.04	3.55	3.51	3.73	3.69	3.68	3.48	3.70	1.35	3.79	2.36	3.78	3.73	3.74
Mar. 8	3.17	3.33	3.33	3.44	3.28	3.53	3.69	3.50	3.41	2.96	1.42	3.38	2.57	3.62	3.60	3.28
10	2.84	3.35	3.02	.....	.....	3.34	.....	.....	.....	.....	.....	.....	.....	.....	.....	.....
12	3.10	3.44	3.19	3.22	3.37	3.82	3.64	3.83	4.00	3.37	1.28	3.87	2.71	3.44	3.91	3.38
13	2.76	3.33	3.15	3.60	3.58	3.55	3.72	3.30	3.41	3.32	1.00	3.50	2.46	3.96	3.45	3.41
14	3.29	3.61	3.11	3.52	3.44	3.31	.....	3.51	.....	3.45	.....	.....	.....	.....	.....	.....
15	3.14	3.28	3.05	3.39	3.41	3.61	3.43	3.41	3.88	3.69	1.31	3.80	2.83	3.50	3.57	3.48
20	3.20	4.09	2.88	3.41	3.76	3.59	4.32	3.50	3.51	3.39	1.46	3.59	2.67	3.83	3.73	3.61

Pair	41.	42.	43.	44.	45.	46.	47.	48.	49.	50.	51.	52.	53.	54.	55.	56.
	″	″	″	″	″	″	″	″	″	″	″	″	″	″	″	″
1914—Mar. 24	3.39	3.52	1.31	3.51	2.61	3.54	3.46	3.58	3.34	3.33	3.75	3.36	3.02	3.74	3.27	3.39
Apr. 3	3.59	3.26	1.37	3.11	2.62	4.01	.....	3.30	3.54	3.54	3.55	3.21	2.91	3.86	3.00	3.76
5	3.71	3.17	1.32	3.69	2.86	3.61	3.55	3.66	2.83	3.31	3.62	3.25	3.22	3.43	3.34	3.32
6	3.86	3.51	1.21	3.33	2.60	3.23	3.72	3.84	3.43	3.48	3.57	3.45	3.08	3.73	3.15	3.62
9	3.39	.....	1.69	3.88	2.80	3.57	3.84	3.29	3.11	3.33	3.60	3.72	2.93	4.11	3.28	3.27
10	3.43	3.29	1.02	3.52	2.67	3.60	3.66	3.29	3.34	3.23	3.55	3.16	3.07	3.57	3.20	3.64
12	4.14	3.17	1.03	3.48	2.40	3.73	3.70	3.21	3.22	3.39	3.93	3.05	2.81	3.55	3.12	3.33
13	3.53	3.39	1.28	3.81	2.54	3.42	3.74	3.30	3.20	3.34	3.11	3.28	3.09	3.31	2.97	3.50

Pair	49.	50.	51.	52.	53.	54.	55.	56.	57.	58.	59.	60.	61.	62.	63.	64.
	″	″	″	″	″	″	″	″	″	″	″	″	″	″	″	″
1914—Apr. 17	3.53	3.47	3.66	3.35	3.21	3.54	3.37	3.43	3.82	3.29	.....	3.28	3.72	3.50	3.35	3.40
18	3.29	3.36	3.57	3.56	3.10	3.43	3.12	3.68	4.00	3.14	3.79	3.18	3.83	3.47	3.34	3.60
21	2.75	3.43	3.58	3.99	3.01	3.52	3.20	3.34	3.60	3.40	3.59	3.38	.....	3.62	3.33	3.49
23	3.11	3.21	3.86	3.66	4.12	2.93	3.05	3.21	3.78	3.64	3.41	3.41	.....	.....	.....	.....
27	3.05	3.22	3.53	3.34	3.10	3.54	3.26	3.13	3.62	3.44	.....	3.48	3.54	3.47	3.59	3.35
28	2.88	3.15	3.00	.....	.....	.....	.....	.....	.....	.....	.....	.....	.....	.....	.....	.....
May 2	3.36	3.09	3.73	3.54	2.95	3.06	3.35	3.55	3.33	3.15	3.59	3.36	3.65	3.35	2.97	3.29
11	2.84	3.50	3.57	3.32	3.30	3.31	2.74	3.43	.....	.....	.....	.....	.....	.....	.....	.....

Pair	57.	58.	59.	60.	61.	62.	63.	64.	65.	66.	67.	68.	69.	70.	71.	72.
	″	″	″	″	″	″	″	″	″	″	″	″	″	″	″	″
1914—May 15	3.66	3.55	3.68	3.56	3.69	3.43	3.43	3.53	3.52	3.12	3.44	3.39	3.58	3.50	3.17	3.41
16	3.57	3.35	3.65	3.14	3.38	3.71	4.07	.....	2.94	3.16	3.82	3.83	3.43	3.37	3.21	3.48
17	3.60	3.57	3.14	3.09	3.48	3.33	3.34	3.02	3.21	3.71	3.61	3.28	3.22	3.22	3.12	3.53
18	3.51	3.26	3.16	3.16	3.17	3.51	3.24	3.50	3.13	3.39	.....	2.98	3.23	3.38	.....	3.33
19	3.91	3.38	3.58	3.17	3.47	3.76	3.18	3.39	3.16	3.28	3.58	3.62	3.10	3.42	3.15	3.57
21	3.78	3.44	3.40	3.24	3.58	3.54	3.44	3.47	3.30	.....	3.38	3.28	3.25	3.33	2.98	3.39
24	3.23	3.32	3.29	3.21	.....	.....	.....	.....	.....	.....	.....	.....	.....	.....	.....	.....
25	3.21	3.19	3.27	3.11	3.38	3.46	2.99	3.35	2.84	3.19	3.22	3.14	3.27	3.39	2.94	3.29
26	3.37	3.12	3.36	3.15	3.28	2.50	3.26	3.48	3.07	3.21	3.47	3.20	3.16	3.28	2.94	3.41
30	3.38	3.33	3.26	3.08	3.41	3.25	3.16	3.19	3.17	3.17	3.53	3.27	3.17	3.21	3.20	3.54
31	3.49	3.37	3.48	3.39	3.25	3.38	3.34	3.14	2.99	3.06	3.42	3.26	3.30	3.11	3.12	3.41
June 2	3.62	3.30	3.44	3.22	3.36	3.45	3.50	3.28	2.83	3.26	3.42	3.39	3.64	3.20	3.20	3.68
7	3.64	3.17	3.29	3.30	3.26	3.76	3.33	3.18	.....	.....	3.11	3.02	3.40	3.24	3.02	3.28

Pair	65.	66.	67.	68.	69.	70.	71.	72.	73.	74.	75.	76.	77.	78.	79.	80.
	″	″	″	″	″	″	″	″	″	″	″	″	″	″	″	″
1914—June 11	2.70	.....	.....	.....	.....	.....	.....	.....	.....	.....	.....	.....	.....	.....	.....	.....
13	2.85	.....	.....	.....	.....	.....	.....	.....	.....	.....	.....	.....	.....	.....	.....	.....
15	2.95	.....	.....	.....	.....	.....	.....	.....	.....	.....	.....	.....	.....	.....	.....	.....
16	3.15	3.42	3.17	3.29	3.04	3.16	3.09	3.38	3.24	3.59	3.65	3.43	3.67	3.13	.....	3.27
17	3.12	3.10	3.56	3.25	3.39	3.46	3.20	3.56	3.72	3.49	3.54	3.42	3.32	2.95	3.36	3.22
19	3.25	3.31	3.36	3.31	3.32	3.19	2.88	3.61	3.63	3.48	3.22	3.52	3.02	3.50	3.67	3.31
20	.....	.....	.....	3.09	3.17	3.24	.....	.....	.....	.....	.....	.....	.....	.....	.....	.....
29	2.83	2.90	3.64	3.25	3.31	2.96	2.77	3.37	.....	3.30	3.79	3.83	3.39	3.16	3.11	3.46
30	3.05	3.27	3.28	3.69	3.19	3.01	3.02	.....	.....	.....	.....	.....	.....	.....	.....	.....
July 2	2.91	3.14	.....	.....	.....	.....	.....	.....	.....	.....	.....	.....	.....	.....	.....	.....
[illegible]	2.92	3.08	3.25	3.24	3.00	3.13	2.76	3.29	3.33	3.37	3.21	3.19	.....	.....	.....	.....
5	2.83	3.27	.....	3.30	3.06	3.07	3.04	3.45	.....	3.31	.....	.....	.....	.....	.....	.....

Pair	73.	74.	75.	76.	77.	78.	79.	80.	81.	82.	83.	84.	85.	86.	87.	88.
	″	″	″	″	″	″	″	″	″	″	″	″	″	″	″	″
1914—July 12	.....	.....	.....	.....	.....	.....	.....	.....	.....	.....	.....	.....	.....	.....	.....	.....
15	3.46	3.32	3.19	3.33	3.49	3.28	3.08	3.36	2.55	2.95	3.18	.....	.....	3.17	3.22	3.27
16	3.57	3.19	3.18	3.26	2.87	3.01	3.23	3.30	2.31	3.29	3.12	3.39	3.22	3.55	3.04	3.16
17	3.47	3.46	3.41	3.17	3.27	3.12	3.17	3.12	2.20	3.24	3.22	3.29	2.92	3.25	3.43	3.30
18	3.75	3.40	3.08	3.22	3.11	2.86	3.10	3.12	.....	.....	.....	.....	.....	.....	.....	.....
19	3.44	3.83	3.43	3.49	3.48	3.31	3.30	3.25	2.28	3.42	3.49	3.15	3.12	3.40	3.40	3.35
20	.....	3.25	3.14	3.37	3.09	3.02	3.04	3.14	2.20	3.50	3.24	3.39	3.14	3.39	3.11	3.42
21	3.38	3.46	3.05	2.95	3.41	3.15	3.23	3.00	2.29	3.19	3.25	3.16	3.00	3.03	3.38	3.27
30	3.42	.....	3.54	3.44	3.21	2.93	3.34	3.28	2.37	3.07	3.53	3.34	.....	3.16	3.44	3.44
31	3.59	.....	3.21	3.32	3.06	3.15	3.21	2.97	2.16	3.15	3.41	3.23	3.06	3.43	3.39	3.27
Aug. 3	3.15	3.41	3.11	3.47	3.16	3.24	3.11	3.21	2.38	3.14	3.40	3.25	3.47	3.45	3.55	.....
13	3.14	3.28	3.13	3.39	3.12	3.11	3.02	3.21	2.19	3.42	3.02	3.06	.....	2.99	3.46	3.29

TABLE 47.—*Individual latitudes, visual*—Continued.

Pair	81.	82.	83.	84.	85.	86.	87.	88.	89.	90.	91.	92.	93.	94.	95.	96.
	″	″	″	″	″	″	″	″	″	″	″	″	″	″	″	″
1914—Aug. 15	2.24	3.22	3.16	3.24	3.26	3.39	3.38	3.53	3.38	3.23	3.21	3.48	3.21	2.46	2.64	3.21
16	2.48	3.29	3.27	.....	3.32	3.34	3.17	3.35	3.31	3.07	3.20	3.43	3.42	2.64	2.69	3.12
18	.....	3.52	3.27	3.31	3.19	3.04	3.00	3.29	3.06	3.27	3.07	2.96	3.07	2.54	2.61	2.92
19	2.20	3.23	3.22	3.14	2.76	3.31	3.33	3.26	3.30	3.27	3.21	.....	.....	.....	.....	.....
20	.....	2.94	3.02	3.03	2.73	3.28	.....	.....	.....	3.32	3.21	3.31	3.00	2.49	2.52	.....
22	2.19	3.12	3.35	3.47	3.16	3.34	3.36	3.18	3.54	3.06	3.13	3.18	3.22	2.69	2.89	2.86
23	2.58	3.31	3.37	3.26	3.12	3.11	3.52	3.11	3.28	3.38	2.86	3.13	3.33	.....	2.67	.....
30	2.54	2.97	3.40	2.89	3.06	3.29	3.13	3.30	3.13	3.12	3.18	3.52	3.25	2.70	2.65	3.22
31	2.17	3.34	3.54	3.22	3.18	3.13	3.30	3.14	3.24	3.24	3.15	3.28	3.23	2.58	2.79	.....
Sept. 1	2.37	3.24	3.30	3.17	2.97	3.21	3.31	3.08	3.16	3.06	2.90	3.13	3.34	2.81	2.73	3.06
4	2.70	3.46	3.43	3.56	3.24	3.22	3.37	3.34	3.33	3.00	2.89	3.10	3.07	2.61	2.77	3.37
5	2.32	3.08	3.51	3.51	3.38	3.59	3.22	3.32	3.38	3.28	3.20	3.27	3.36	2.45	2.52	3.29
7	.....	3.26	3.51	.....	3.69	.....	.....	.....	3.26	2.94	3.11	3.27	3.28	2.56	2.35	3.49
8	2.40	3.24	3.27	3.16	3.17	3.12	3.55	3.01	.....	.....	.....	.....	.....	.....	.....	.....
9	2.64	3.31	3.19	3.21	3.04	3.89	3.42	3.11	3.29	3.23	3.11	3.27	3.11	2.62	3.02	3.44
13	2.21	3.14	3.16	3.16	3.17	3.22	3.39	3.04	2.87	3.65	3.11	3.12	3.41	2.69	3.10	2.99
14	2.06	3.26	3.15	3.02	2.79	3.10	3.22	3.31	3.38	3.22	3.01	3.13	3.39	2.77	2.82	3.09
19	2.47	3.31	3.44	3.40	3.16	3.25	3.19	2.98	3.09	3.33	3.02	3.09	3.46	2.60	2.86	2.79
20	2.24	3.18	3.11	3.17	.....	3.10	3.28	3.16	3.06	3.23	3.17	3.31	3.11	2.59	2.78	2.97
21	2.20	3.18	3.34	3.28	3.19	3.22	3.28	3.29	3.01	3.16	.....	3.15	3.48	2.83	2.73	2.72
22	2.40	2.96	3.38	3.14	2.90	3.20	3.39	3.13	3.19	3.37	2.92	3.25	3.31	2.43	2.62	3.20

Pair	89.	90.	91.	92.	93.	94.	95.	96.	1.	2.	3.	4.	5.	6.	7.	8.
	″	″	″	″	″	″	″	″	″	″	″	″	″	″	″	″
1914—Sept. 26	3.11	3.15	3.11	3.35	3.17	2.34	2.76	2.90	3.31	2.96	3.02	3.07	3.31	3.36	3.56	3.09
28	3.01	2.92	2.44	3.28	3.22	3.01	2.62	3.09	3.45	3.04	3.16	3.19	2.67	3.11	3.33	3.33
29	3.06	3.37	3.14	3.20	.....	2.74	2.56	3.19	.....	2.73	3.04	3.10	3.05	3.12	3.82	2.69
30	3.04	3.44	3.21	3.37	3.40	2.77	2.63	3.12	3.14	3.09	3.21	3.34	2.85	3.32	3.48	3.13
Oct. 1	.....	3.22	3.20	3.17	3.54	2.32	2.94	2.95	3.31	3.18	3.46	3.47	2.89	3.28	3.90	2.90
2	3.03	3.15	3.20	3.17	3.05	2.35	2.62	3.10	3.03	3.13	3.24	3.53	3.10	3.29	3.48	3.20
5	2.98	3.21	3.12	3.35	3.32	2.75	2.85	2.99	3.37	3.33	3.08	.....	3.09	3.12	3.21	.....
9	2.95	3.15	3.08	.....	.....	.....	.....	.....	.....	.....	.....	.....	.....	.....	.....	.....
10	.....	3.16	3.32	3.15	3.33	2.78	2.49	.....	.....	.....	.....	.....	.....	.....	.....	.....
12	3.08	3.57	2.90	3.23	3.09	2.47	2.83	2.94	3.04	.....	.....	.....	.....	3.29	3.84	3.19
19	3.67	3.36	2.97	3.77	3.70	2.59	3.34	3.24	3.19	3.13	3.39	3.13	3.58	3.30	3.73	3.05
20	2.99	3.27	3.12	3.13	3.04	2.72	2.71	3.06	3.26	2.82	3.16	3.02	3.22	.....	.....	.....
21	2.95	3.20	3.27	3.30	2.90	3.02	2.56	3.02	3.63	3.24	3.14	3.16	3.29	3.13	3.70	3.21
22	3.22	3.02	2.73	3.15	3.34	2.71	2.89	3.07	3.22	3.11	3.02	.....	.....	.....	.....	.....
23	2.97	3.16	3.02	3.25	3.27	2.72	2.64	2.74	3.04	2.92	2.79	3.30	3.13	3.13	3.34	3.04
31	3.05	3.08	3.33	3.15	3.18	2.49	2.79	2.86	3.17	2.82	3.01	3.16	2.96	3.06	3.43	2.88

From the individual results in this table, the correction r to reduce the assumed mean declination of each pair to the group mean was obtained in the usual way (see p. 64). The resulting values of r with the number n of separate determinations of its value in the three year period are given in the following table:

TABLE 48.—*Corrections to the declinations of individual pairs.*

Group I.		Group II.		Group III.		Group IV.		Group V.		Group VI.		Group VII.		Group VIII.		Group IX.		Group X.		Group IX.		Group XII.	
n=50.		n=27.		n=36.		n=33.		n=36.		n=35.		n=49.		n=44.		n=39.		n=34.		n=51.		n=67.	
Pair.	r.	Pair.	r.	Pair.	r.	Pair.	r.	Pair.	r.	Pair.	r.	Pair.	r.	Pair.	r.	Pair.	r.	Pair.	r.	Pair.	r.	Pair.	r.
	″		″		″		″		″		″		″		″		″		″		″		″
1	−0.08	9	+0.06	17	−0.21	25	−0.11	33	+0.33	41	−0.41	49	+0.15	57	−0.12	65	+0.22	73	−0.18	81	+0.76	89	−0.06
2	+ .15	10	− .09	18	+ .08	26	− .05	34	− .04	42	− .21	50	− .02	58	+ .06	66	+ .03	74	− .11	82	− .13	90	− .17
3	+ .07	11	+ .05	19	− .14	27	+ .09	35	+ .29	43	+1.78	51	− .21	59	− .01	67	− .15	75	− .04	83	− .12	91	− .03
4	− .01	12	− .03	20	+ .24	28	.00	36	− .05	44	− .44	52	− .04	60	+ .13	68	− .09	76	− .07	84	− .14	92	− .16
5	+ .05	13	− .30	21	+ .02	29	− .02	37	− .08	45	+ .49	53	+ .21	61	− .06	69	− .03	77	+ .10	85	+ .04	93	− .13
6	+ .12	14	+ .12	22	− .06	30	− .10	38	− .10	46	− .42	54	− .16	62	− .07	70	.00	78	+ .13	86	− .17	94	+ .38
7	− .41	15	+ .18	23	+ .05	31	+ .14	39	− .20	47	− .47	55	+ .20	63	+ .03	71	+ .17	79	+ .06	87	− .16	95	+ .26
8	+ .11	16	+ .03	24	+ .02	32	+ .06	40	− .12	48	− .33	56	− .15	64	+ .05	72	− .13	80	+ .11	88	− .07	96	− .09

These values of r are to be applied to the latitudes only on those nights when the corresponding group has been incompletely observed. The mean latitude given by each group is now to be formed. The results are shown in the following table:

TABLE 49.—*Mean latitudes by groups, visual.*

Date.	n.	IX.	n.	X.	Date.	n.	IX.	n.	X.	Date.	n.	IX.	n.	X.
		″		″			″		″			″		″
1911—June 9..	8	3.22	8	3.49	1911—June 20..	8	3.42	8	3.62	1911—June 29..	8	3.49	8	3.57
11..	1	3.79	.....	.....	21..	7	3.42	8	3.52	30..	8	3.50	8	3.59
14..	6	3.35	2	3.51	22..	6	3.56	.....	.....	July 1..	8	3.46	8	3.52
15..	8	3.31	1	3.57	26..	1	3.36	.....	.....	6..	8	3.46	8	3.51
16..	.....	.....	6	3.41	27..	8	3.35	8	3.43	9..	8	3.38	8	3.52
18..	8	3.47	7	3.59	28..	8	3.53	8	3.57					

TABLE 49.—*Mean latitudes by groups, visual*—Continued.

Date.	n.	X.	n.	XI.	Date.	n.	X.	n.	XI.	Date.	n.	X.	n.	XI.
		″		″			″		″			″		″
1911—July 12..	8	3.61	.....	.....	1911—July 22..	7	3.53	7	3.39	1911—Aug. 8..	7	3.61	8	3.52
14..	6	3.62	5	3.55	27..	8	3.65	8	3.56	9..	8	3.60	7	3.56
15..	8	3.52	8	3.49	28..	3	3.66	.....	.....	10..	6	3.64	8	3.51
17..	8	3.71	4	3.75	31..	8	3.58	8	3.48	11..	1	3.69	.....	.....
19..	2	3.68	.....	.....	Aug. 6..	8	3.55	8	3.50					
20..	5	3.69	.....	.....	7..	8	3.58	8	3.46					

Date.	n.	XI.	n.	XII.	Date.	n.	XI.	n.	XII.	Date.	n.	XI.	n.	XII.
1911—Aug. 16..	8	3.56	.....	.....	1911—Sept. 12..	8	3.65	8	3.55	1911—Sept. 19..	1	3.62	.....	.....
21..	4	3.59	.....	.....	13..	8	3.66	4	3.48	20..	8	3.54	8	3.57
Sept. 1..	8	3.45	8	3.49	16..	8	3.49	8	3.41	22..	8	3.69	8	3.47
2..	7	3.49	1	3.25	17..	3	3.51	.....	.....					

Date.	n.	XII.	n.	I.	Date.	n.	XII.	n.	I.	Date.	n.	XII.	n.	I.
1911—Sept. 26..	8	3.56	7	3.72	1911—Oct. 12..	8	3.37	6	3.58	1911—Oct. 26..	8	3.41	5	3.45
29..	7	3.50	.....	.....	18..	7	3.46	8	3.39	29..	8	3.47	8	3.41
30..	8	3.44	8	3.65	23..	8	3.40	8	3.44	30..	2	3.42	.....	.....
Oct. 6..	4	3.60	.....	.....	24..	8	3.48	8	3.46					
11..	8	3.37	8	3.50	25..	8	3.38	8	3.46					

Date.	n.	I.	n.	II.	Date.	n.	I.	n.	II.	Date.	n.	I.	n.	II.
1911—Nov. 2..	8	3.39	8	3.38	1911—Nov. 16..	8	3.34	8	3.37	1911—Nov. 30..	8	3.35	8	3.23
3..	8	3.47	5	3.36	18..	6	3.38	.....	.....	Dec. 1..	3	3.21	.....	.....
7..	8	3.44	.....	.....	19..	8	3.37	8	3.40	4..	8	3.41	3	3.21
10..	8	3.35	8	3.36	22..	8	3.29	8	3.39	5..	8	3.33	8	3.38
13..	5	3.44	.....	.....	26..	8	3.28	8	3.34	6..	8	3.29	8	3.24

Date.	n.	II.	n.	III.	Date.	n.	II.	n.	III.	Date.	n.	II.	n.	III.
1911—Dec. 7..	8	3.13	8	3.36	1911—Dec. 19..	8	3.41	8	3.34	1912—Jan. 4..	2	3.28	.....	.....
8..	2	3.47	.....	.....	28..	8	3.29	7	3.31					

Date.	n.	III.	n.	IV.	Date.	n.	III.	n.	IV.	Date.	n.	III.	n.	IV.
1912—Jan. 7..	8	3.27	2	3.30	1912—Jan. 19..	8	3.22	8	3.26	1912—Jan. 25..	1	3.00	.....	.....
9..	8	3.18	8	3.35	21..	8	3.01	8	3.25	27..	8	3.16	8	3.16
13..	8	3.28	8	3.33	22..	8	3.05	8	3.12					
16..	8	3.19	8	3.24	24..	8	3.14	7	3.19					

Date.	n.	IV.	n.	V.	Date.	n.	IV.	n.	V.	Date.	n.	IV.	n.	V.
1912—Feb. 4..	8	3.02	7	3.30	1912—Feb. 8..	8	3.16	8	3.06	1912—Feb. 13..	8	3.20	8	3.25
5..	8	3.12	8	3.12	9..	8	3.01	8	3.13	14..	2	3.02	.....	.....
6..	8	3.06	7	2.98	11..	4	3.26	.....	.....	23..	8	3.05	8	3.04

Date.	n.	V.	n.	VI.	Date.	n.	V.	n.	VI.	Date.	n.	V.	n.	VI.
1912—Feb. 27..	8	3.06	8	2.86	1912—Mar. 10..	8	3.11	8	2.83	1912—Mar. 17..	8	3.04	8	2.76
28..	8	2.95	8	2.85	13..	7	3.17	4	2.80					
Mar. 7..	8	3.06	8	2.83	16..	8	3.13	8	2.85					

Date.	n.	VI.	n.	VII.	Date.	n.	VI.	n.	VII.	Date.	n.	VI.	n.	VII.
1912—Mar. 22..	6	2.79	8	3.00	1912—Mar. 31..	8	2.74	.....	.....	1912—Apr. 9..	8	2.85	8	3.03
25..	8	2.75	8	2.94	Apr. 3..	8	2.69	8	2.88	10..	8	2.75	8	2.96
30..	1	3.15	8	2.92	8..	8	2.71	8	2.98	11..	8	2.83	8	3.07

Date.	n.	VII.	n.	VIII.	Date.	n.	VII.	n.	VIII.	Date.	n.	VII.	n.	VIII.
1912—Apr. 19..	8	2.86	8	3.18	1912—May 1..	8	3.08	8	3.05	1912—May 4..	8	2.93	8	3.06
23..	8	2.93	8	3.02	2..	8	2.88	7	3.06	9..	8	2.98	8	3.05
27..	8	3.06	8	3.20	3..	8	2.99	7	3.08	10..	8	2.98	8	3.18

TABLE 49.—*Mean latitudes by groups, visual*—Continued.

Date.	n.	VIII.	n.	IX.	Date.	n.	VIII.	n.	IX.	Date.	n.	VIII.	n.	IX.
		"		"			"		"			"		"
1912—May 13..	4	3.12	....	.....	1912—May 27..	8	3.10	8	3.10	1912—June 5..	4	3.12	....	.....
18..	8	2.97	8	2.96	30..	8	3.20	8	3.03	8..	8	3.17	8	3.24
20..	8	3.06	7	3.10	31..	8	3.08	8	3.15					
26..	8	3.17	8	3.11	June 1..	8	3.19	8	3.06					

Date.	n.	IX.	n.	X.	Date.	n.	IX.	n.	X.	Date.	n.	IX.	n.	X.
1912—June 9..	8	3.22	8	3.31	1912—June 20..	7	3.13	8	3.31	1912—July 5..	8	3.13	8	3.32
10..	8	3.06	8	3.25	July 2..	8	3.19	8	3.25	7..	8	3.20	8	3.32
13..	8	3.17	....	.....	3..	8	3.16	8	3.23	8..	6	3.18	....	.....

Date.	n.	X.	n.	XI.	Date.	n.	X.	n.	XI.	Date.	n.	X.	n.	XI.
1912—July 19..	5	3.32	6	3.32	1912—Aug. 2..	1	3.43	....	.....	1912—Aug. 11..	4	3.34	....	.....
25..	5	3.29	3	2.87	3..	8	3.36	7	3.37	12..	8	3.31	8	3.41
26..	6	3.29	6	3.18	5..	8	3.52	7	3.17					
30..	7	3.35	8	3.25	7..	8	3.41	8	3.23					

Date.	n.	XI.	n.	XII.	Date.	n.	XI.	n.	XII.	Date.	n.	XI.	n.	XII.
1912—Aug. 20..	8	3.24	....	.....	1912—Aug. 31..	8	3.31	6	3.34	1912—Sept. 10..	7	3.41	8	3.22
23..	8	3.41	....	.....	Sept. 5..	8	3.25	8	3.29	12..	7	3.36	8	3.41
24..	8	3.37	8	3.36	6..	8	3.32	....	.....	17..	6	3.33	3	3.42
27..	1	3.48	....	.....	8..	....	.....	8	3.35	20..	8	3.32	8	3.34
29..	5	3.39	....	.....	9..	7	3.23	8	3.24					

Date.	n.	XII.	n.	I.	Date.	n.	XII.	n.	I.	Date.	n.	XII.	n.	I.
1912—Sept. 28..	8	3.28	....	.....	1912—Oct. 6..	7	3.38	8	3.53	1912—Oct. 20..	8	3.40	8	3.52
30..	8	3.32	8	3.52	7..	8	3.36	8	3.55	26..	8	3.36	8	3.69
Oct. 1..	7	3.36	8	3.58	9..	1	3.37	....	.....	27..	8	3.43	8	3.43
2..	8	3.41	8	3.56	11..	7	3.37	....	.....	28..	8	3.35	1	3.63
3..	3	3.32	....	.....	14..	2	3.36	....	.....	29..	8	3.33	8	3.54
4..	3	3.33	8	3.38	15..	8	3.39	7	3.53	30..	8	3.40	8	3.63
5..	8	3.37	8	3.59	16..	8	3.22	8	3.47	Nov. 1..	3	3.48	....	.....

Date.	n.	I.	n.	II.	Date.	n.	I.	n.	II.	Date.	n.	I.	n.	II.
1912—Nov. 3..	8	3.42	8	3.43	1912—Nov. 16..	8	3.35	8	3.39	1912—Nov. 25..	6	3.49	2	3.62
5..	2	3.20	....	.....	18..	8	3.46	8	3.38	26..	8	3.49	3	3.61
10..	8	3.51	8	3.46	19..	8	3.49	8	3.46	30..	8	3.56	8	3.49
11..	8	3.48	8	3.41	20..	8	3.53	8	3.41	Dec. 3..	8	3.59	8	3.38
12..	2	3.50	....	.....	22..	8	3.55	7	3.52	6..	8	3.53	8	3.54

Date.	n.	II.	n.	III.	Date.	n.	II.	n.	III.	Date.	n.	II.	n.	III.
1912—Dec. 7..	2	3.50	....	.....	1912—Dec. 14..	7	3.52	4	3.59	1912—Dec. 22..	1	3.29	....	.....
9..	5	3.51	8	3.37	15..	5	3.34	....	.....	1913—Jan. 1..	7	3.48	8	3.36
12..	8	3.54	8	3.46	20..	8	3.49	8	3.38	4..	7	3.29	8	3.33
13..	8	3.48	8	3.38	21..	3	3.46	7	3.54					

Date.	n.	III.	n.	IV.	Date.	n.	III.	n.	IV.	Date.	n.	III.	n.	IV.
1913—Jan. 9..	7	3.36	8	3.44	1913—Jan. 18..	8	3.57	8	3.41	1913—Jan. 26..	8	3.36	1	3.52
13..	8	3.33	8	3.44	21..	8	3.48	7	3.51	30..	8	3.35	5	3.42
14..	8	3.42	8	3.39	22..	8	3.36	8	3.36					
15..	6	3.29	....	.....	25..	8	3.34	3	3.19					

Date.	n.	IV.	n.	V.	Date.	n.	IV.	n.	V.	Date.	n.	IV.	n.	V.
1913—Feb. 1..	8	3.69	8	3.31	1913—Feb. 8..	7	3.35	7	3.48	1913—Feb. 18..	8	3.48	8	3.35
4..	8	3.40	8	3.43	12..	8	3.37	8	3.50	21..	1	3.73	....	.....
6..	7	3.43	8	3.33	13..	8	3.36	8	3.27	23..	8	3.42	2	3.29
7..	8	3.53	8	3.40	14..	8	3.17	8	3.29					

Date.	n.	V.	n.	VI.	Date.	n.	V.	n.	VI.	Date.	n.	V.	n.	VI.
1913—Feb. 25..	8	3.42	8	3.13	1913—Mar. 6..	5	3.46	6	3.19	1913—Mar. 12..	3	3.25	....	.....
28..	7	3.24	5	3.06	7..	8	3.28	4	3.18	17..	8	3.37	8	3.11
Mar. 2..	6	3.41	8	3.04	9..	6	3.24	....	.....	18..	8	3.34	7	2.98
5..	8	3.29	7	3.12	11..	7	3.28	8	2.99	20..	8	3.25	7	3.02

TABLE 49.—*Mean latitudes by groups, visual*—Continued.

Date.	n.	VI.	n.	VII.	Date.	n.	VI.	n.	VII.	Date.	n.	VI.	n.	VII.
		″		″			″		″			″		″
1913—Mar. 22..	8	2.88	8	3.28	1913—Mar. 31..	3	2.87	8	3.12	1913—Apr. 6..	8	2.86	7	3.12
27..	8	2.91	8	3.24	Apr. 1..	8	2.84	8	3.19	8..	8	2.92	8	3.16
28..	8	2.89	8	3.20	5..	6	2.87	8	3.25					

Date.	n.	VII.	n.	VIII.	Date.	n.	VII.	n.	VIII.	Date.	n.	VII.	n.	VIII.
1913—Apr. 17..	8	3.16	8	3.36	1913—Apr. 22..	8	3.13	8	3.23	1913—May 2..	5	3.03	8	3.24
18..	2	3.07	.....	.....	24..	8	3.12	5	3.20	3..	8	3.18	7	3.22
19..	8	3.32	7	3.45	25..	8	3.09	8	3.20	8..	5	3.02	8	3.15
20..	8	3.16	8	3.26	29..	8	3.19	6	3.27	10..	7	2.96	8	3.21
21..	8	3.13	6	3.21	May 1..	8	3.09	8	3.38	11..	8	3.11	8	3.29

Date.	n.	VIII.	n.	IX.	Date.	n.	VIII.	n.	IX.	Date.	n.	VIII.	n.	IX.
1913—May 19..	8	3.20	.....	.....	1913—May 31..	8	3.08	8	3.30	1913—June 6..	8	3.10	8	3.06
20..	8	3.14	6	3.21	June 2..	8	3.10	8	3.08					
24..	8	3.28	8	3.08	5..	8	3.09	8	2.93					

Date.	n.	IX.	n.	X.	Date.	n.	IX.	n.	X.	Date.	n.	IX.	n.	X.
1913—June 9..	8	3.17	.....	.....	1913—June 28..	8	3.08	3	3.03	1913—July 7..	7	3.08	8	3.18
13..	8	3.16	8	3.23	29..	8	3.04	8	3.35	8..	8	3.08	8	3.20
17..	8	3.07	6	3.26	30..	7	3.09	8	3.18					
18..	6	2.97	3	3.00	July 3..	8	3.04	8	3.07					

Date.	n.	X.	n.	XI.	Date.	n.	X.	n.	XI.	Date.	n.	X.	n.	XI.
1913—July 10..	2	3.08	.....	.....	1913—July 18..	8	3.25	8	3.15	1913—Aug. 2..	8	3.21	8	3.08
11..	1	3.17	.....	.....	21..	7	3.18	8	3.13	4..	7	3.18	8	3.16
13..	2	2.99	.....	.....	22..	7	3.20	.....	.....	5..	8	3.20	7	3.10
14..	3	2.95	.....	.....	25..	8	3.22	8	3.10	7..	8	3.13	8	3.16
16..	7	3.14	8	3.17	26..	8	3.27	7	3.15	11..	8	3.14	5	3.12

Date.	n.	XI.	n.	XII.	Date.	n.	XI.	n.	XII.	Date.	n.	XI.	n.	XII.
1913—Aug. 14..	5	3.14	.....	.....	1913—Aug. 24..	8	3.18	8	3.11	1913—Sept. 10..	8	2.95	8	3.10
15..	8	3.11	8	3.07	25..	8	3.14	8	3.00	11..	8	3.03	.....	.....
16..	8	3.07	8	2.91	Sept. 4..	8	3.10	8	3.03	22..	8	3.07	8	3.15
19..	8	3.07	8	3.12	5..	8	3.05	7	2.98					
20..	8	3.14	8	3.04	9..	8	3.17	8	3.00					

Date.	n.	XII.	n.	I.	Date.	n.	XII.	n.	I.	Date.	n.	XII.	n.	I.
1913—Sept. 23..	8	3.19	7	3.16	1913—Oct. 4..	8	3.13	8	3.29	1913—Oct. 26..	8	3.17	8	3.34
24..	8	3.06	8	3.25	12..	7	3.14	.....	.....	27..	2	3.14	.....	.....
25..	7	3.12	8	3.28	13..	8	3.22	8	3.28	29..	5	3.05	.....	.....
27..	8	3.01	8	3.19	14..	8	3.17	8	3.34	Nov. 1..	7	3.16	8	3.21
28..	7	3.03	.....	.....	16..	8	3.16	8	3.36					
Oct. 3..	8	3.09	8	3.35	22..	8	3.10	8	3.29					

Date.	n.	I.	n.	II.	Date.	n.	I.	n.	II.	Date.	n.	I.	n.	II.
1913—Nov. 4..	8	3.42	8	3.29	1913—Nov. 17..	7	3.35	8	3.28	1913—Dec. 5..	8	3.34	8	3.37
5..	8	3.35	8	3.16	21..	8	3.33	8	3.43					
6..	8	3.37	8	3.22	22..	7	3.38	8	3.36					

Date.	n.	II.	n.	III.	Date.	n.	II.	n.	III.	Date.	n.	II.	n.	III.
1913—Dec. 9..	8	3.33	8	3.30	1913—Dec. 15..	8	3.33	8	3.27	1913—Dec. 27..	8	3.41	8	3.37
11..	7	3.44	8	3.36	18..	8	3.39	8	3.40	29..	8	3.41	8	3.39
12..	4	3.47	.....	.....	19..	8	3.36	8	3.28	1914—Jan. 1..	4	3.40	.....	.....
13..	8	3.43	8	3.33	22..	6	3.43	1	3.03					

Date.	n.	III.	n.	IV.	Date.	n.	III.	n.	IV.	Date.	n.	III.	n.	IV.
1914—Jan. 6..	6	3.30	.....	.....	1914—Jan. 18..	2	3.01	.....	.....	1914—Jan. 26..	7	3.31	1	3.60
11..	8	3.34	6	3.58	25..	8	3.36	6	3.56	29..	8	3.39	8	3.31

TABLE 49.—*Mean latitudes by groups, visual*—Continued.

Date.	n.	IV.	n.	V.	Date.	n.	IV.	n.	V.	Date.	n.	IV.	n.	V.
		″		″			″		″			″		″
1914—Feb. 1..	7	3.24	8	3.25	1914—Feb. 9..	8	3.06	8	3.44	1914—Feb. 17..	8	3.50	8	3.57
2..	7	3.36	7	3.25	11..	8	3.42	8	3.43	21..	7	3.33	8	3.50
7..	6	3.37	7	3.71	15..	2	3.48	.....	.....	24..	8	3.49	7	3.36
8..	4	3.52	.....	.....	16..	8	3.42	8	3.34					

Date.	n.	V.	n.	VI.	Date.	n.	V.	n.	VI.	Date.	n.	V.	n.	VI.
1914—Feb. 26...	8	3.43	8	3.24	1914—Mar. 12..	8	3.45	8	3.25	1914—Mar. 15..	8	3.34	8	3.26
Mar. 8..	8	3.41	8	3.03	13..	8	3.37	8	3.06	20..	8	3.59	8	3.22
10..	4	3.26	.....	.....	14..	7	3.43	1	3.24					

Date.	n.	VI.	n.	VII.	Date.	n.	VI.	n.	VII.	Date.	n.	VI.	n.	VII.
1914—Mar. 24..	8	3.11	8	3.40	1914—Apr. 6..	8	3.16	8	3.44	1914—Apr. 12..	8	3.11	8	3.30
Apr. 3..	7	3.11	8	3.42	9..	7	3.24	8	3.42	13..	8	3.13	8	3.23
5..	8	3.20	8	3.29	10..	8	3.06	8	3.35					

Date.	n.	VII.	n.	VIII.	Date.	n.	VII.	n.	VIII.	Date.	n.	VII.	n.	VIII.
1914—Apr. 17..	8	3.44	7	3.48	1914—Apr. 23..	8	3.39	4	3.57	1914—May 2..	8	3.33	8	3.34
18..	8	3.39	8	3.54	27..	8	3.27	7	3.50	11..	8	3.25	.....	.....
21..	8	3.34	7	3.50	28..	3	2.98	.....	.....					

Date.	n.	VIII.	n.	IX.	Date.	n.	VIII.	n.	IX.	Date.	n.	VIII.	n.	IX.
1914—May 15..	8	3.57	8	3.39	1914—May 21..	8	3.49	7	3.27	1914—May 31..	8	3.36	8	3.21
16..	7	3.54	8	3.41	24..	4	3.28	.....	.....	June 2..	8	3.40	8	3.33
17..	8	3.32	8	3.36	25..	8	3.24	8	3.16	7..	8	3.37	6	3.14
18..	8	3.31	6	3.24	26..	8	3.19	8	3.22					
19..	8	3.48	8	3.36	30..	8	3.26	8	3.28					

Date.	n.	IX.	n.	X.	Date.	n.	IX.	n.	X.	Date.	n.	IX.	n.	X.
1914—June 11..	1	2.92	.....	.....	1914—June 17..	8	3.33	8	3.38	1914—July 2..	2	3.14	.....	.....
13..	1	3.07	.....	.....	19..	8	3.28	8	3.42	3..	8	3.08	4	3.17
15..	1	3.17	.....	.....	20..	3	3.13	.....	.....	5..	7	3.17	1	3.20
16..	8	3.21	7	3.42	29..	8	3.13	7	3.46					

Date.	n.	X.	n.	XI.	Date.	n.	X.	n.	XI.	Date.	n.	X.	n.	XI.
1914—July 15..	8	3.31	6	3.08	1914—July 19..	8	3.44	8	3.20	1914—July 31..	7	3.24	8	3.14
16..	8	3.20	8	3.13	20..	7	3.18	8	3.17	Aug. 3..	8	3.23	7	3.24
17..	8	3.27	8	3.11	21..	8	3.20	8	3.07	13..	8	3.17	7	3.05
18..	8	3.21	.....	.....	30..	7	3.33	7	3.18					

Date.	n.	XI.	n.	XII.	Date.	n.	XI.	n.	XII.	Date.	n.	XI.	n.	XII.
1914—Aug. 15..	8	3.18	8	3.10	1914—Aug. 30..	8	3.07	8	3.10	1914—Sept. 9..	8	3.23	8	3.14
16..	7	3.19	8	3.11	31..	8	3.13	7	3.08	13..	8	3.06	8	3.12
18..	7	3.12	8	2.94	Sept. 1..	8	3.08	8	3.02	14..	8	2.99	8	3.10
19..	8	3.06	3	3.17	4..	8	3.29	8	3.02	19..	8	3.15	8	3.03
20..	5	2.89	6	2.99	5..	8	3.24	8	3.09	20..	7	3.02	8	3.03
22..	8	3.15	8	3.07	7..	3	3.42	8	3.03	21..	8	3.12	7	3.03
23..	8	3.17	6	3.06	8..	8	3.11	.....	.....	22..	8	3.07	8	3.05

Date.	n.	XII.	n.	I.	Date.	n.	XII.	n.	I.	Date.	n.	XII.	n.	I.
1914—Sept. 26..	8	2.99	8	3.21	1914—Oct. 5..	8	3.07	6	3.18	1914—Oct. 21..	8	3.05	8	3.31
28..	8	2.95	8	3.16	9..	3	2.97	.....	.....	22..	8	3.02	3	3.15
29..	7	3.06	7	3.09	10..	6	3.06	.....	.....	23..	8	2.97	8	3.09
30..	8	3.12	8	3.19	12..	8	3.01	4	3.28	31..	8	2.99	8	3.06
Oct. 1..	7	3.06	8	3.30	19..	8	3.33	8	3.31					
2..	8	2.96	8	3.25	20..	8	3.01	5	3.14					

The group differences were formed from the above table, and the corrections to the declination system of each group obtained by the process outlined on page 71, with following results:

Group corrections, visual.

Group.	Correction.	Group.	Correction.	Group.	Correction.
	″		″		″
I	−0.100	V	−0.002	IX	−0.010
II	− .028	VI	+ .263	X	− .131
III	+ .048	VII	+ .039	XI	− .021
IV	− .012	VIII	− .080	XII	+ .040

These values were applied to the mean latitudes in Table 49, from which the following table of corrected daily mean latitudes was formed. Weighted monthly means were formed and plotted, smooth curves were drawn through the points before and after January 1, 1912, from which the values ϕ_c (Curve ϕ) were obtained, and thence the residuals v', where

$$v' = \phi_o - \phi_c,$$

which has been called the night error. In computing v' only nights on which 10 pairs were observed are utilized. For a discussion of the night error see page 122.

TABLE 50.—*Mean daily latitudes, visual.*

Date.	Observer.	Number of pairs.	Mean ϕ.	Curve ϕ.	v'.	Date.	Observer.	Number of pairs.	Mean ϕ.	Curve ϕ.	v'.
			″	″	″				″	″	″
1911—June 9	R.	16	3.36			1911—Nov. 2	R.	16	3.38	3.42	−0.04
11	R.	1	3.79			3	R.	13	3.43	3.42	+ .01
14	R.	8	3.39			7	R.	8	3.44		
15	R.	9	3.34			10	R.	16	3.36	3.39	− .03
16	R.	6	3.41			13	R.	5	3.44		
18	R.	15	3.53	3.44	+0.09	16	R.	16	3.36	3.38	− .02
20	R.	16	3.52	3.45	+ .07	18	R.	6	3.38		
21	R.	15	3.47	3.45	+ .02	19	R.	16	3.38	3.37	+ .01
22	R.	6	3.56			22	R.	16	3.34	3.36	− .02
26	R.	1	3.36			26	R.	16	3.31	3.35	− .04
27	R.	16	3.39	3.48	− .09	30	R.	16	3.29	3.33	− .04
28	R.	16	3.55	3.48	+ .07	Dec. 1	R.	3	3.21		
29	R.	16	3.53	3.49	+ .04	4	R.	11	3.36	3.32	+ .04
30	R.	16	3.54	3.49	+ .05	5	R.	16	3.36	3.32	+ .04
July 1	R.	16	3.49	3.50	− .01	6	R.	16	3.26	3.31	− .05
6	R.	16	3.48	3.52	− .04	7	R.	16	3.24	3.31	− .07
9	R.	16	3.45	3.53	− .08	8	R.	2	3.47		
12	R.	8	3.61			19	R.	16	3.38	3.27	+ .11
14	R.	11	3.59	3.54	+ .05	28	R.	15	3.30	3.23	+ .07
15	R.	16	3.50	3.55	− .05	1912—Jan. 4	R.	2	3.28		
17	R.	12	3.72	3.55	+ .17	7	R.	10	3.31	3.26	+ .05
19	R.	2	3.68			9	R.	16	3.28	3.25	+ .03
20	R.	5	3.69			13	R.	16	3.32	3.24	+ .08
22	R.	14	3.46	3.56	− .10	16	R.	16	3.24	3.22	+ .02
27	R.	16	3.60	3.56	+ .04	19	R.	16	3.26	3.21	+ .05
28	R.	3	3.66			21	R.	16	3.15	3.20	− .05
31	R.	16	3.53	3.56	− .03	22	R.	16	3.10	3.19	− .09
Aug. 6	R.	16	3.52	3.56	− .04	24	R.	15	3.19	3.18	+ .01
7	R.	16	3.52	3.56	− .04	25	R.	1	3.05		
8	R.	15	3.56	3.56	.00	27	R.	16	3.18	3.17	+ .01
9	R.	15	3.58	3.56	+ .02	Feb. 4	R.	15	3.15	3.15	.00
10	R.	14	3.57	3.56	+ .01	5	R.	16	3.12	3.15	− .03
11	W. R.	1	3.69			6	R.	15	3.02	3.14	− .12
16	W. R.	8	3.56			8	R.	16	3.10	3.13	− .03
21	W. R.	4	3.59			9	R.	16	3.06	3.12	− .06
Sept. 1	W. R.	16	3.47	3.54	− .07	11	R.	4	3.25		
2	W. R.	8	3.46			13	R.	16	3.22	3.11	+ .11
12	W. R.	16	3.60	3.53	+ .07	14	R.	2	3.01		
13	W. R.	12	3.60	3.53	+ .07	23	R.	16	3.04	3.08	− .04
16	W. R.	16	3.45	3.52	− .07	27	R.	16	3.09	3.07	+ .02
17	W. R.	3	3.51			28	R.	16	3.03	3.06	− .03
19	W. R.	1	3.62			Mar. 7	R.	16	3.08	3.05	+ .03
20	W. R.	16	3.56	3.51	+ .05	10	R.	16	3.10	3.04	+ .06
22	W. R.	16	3.58	3.51	+ .07	13	R.	11	3.13	3.03	+ .10
26	W. R.	15	3.64	3.51	+ .13	16	R.	16	3.12	3.03	+ .09
29	W. R.	7	3.50			17	R.	16	3.03	3.03	.00
30	R.	16	3.54	3.50	+ .04	22	R.	14	3.04	3.03	+ .01
Oct. 6	R.	4	3.60			25	R.	16	3.00	3.03	− .03
11	R.	16	3.44	3.48	− .04	30	R.	9	3.01		
12	R.	14	3.47	3.48	− .01	31	R.	8	3.00		
18	R.	15	3.42	3.46	− .04	Apr. 3	R.	16	2.94	3.02	− .08
23	R.	16	3.42	3.45	− .03	8	R.	16	3.00	3.02	− .02
24	R.	16	3.47	3.45	+ .02	9	R.	16	3.09	3.02	+ .07
25	R.	16	3.42	3.44	− .02	10	R.	16	3.00	3.02	− .02
26	R.	13	3.43	3.44	− .01	11	R.	16	3.10	3.02	+ .08
29	R.	16	3.44	3.43	+ .01	19	R.	16	3.00	3.02	− .02
30	R.	2	3.42			23	R.	16	2.96	3.02	− .06

TABLE 50.—*Mean daily latitudes, visual*—Continued.

Date.	Observer.	Number of pairs.	Mean ϕ.	Curve ϕ.	v'.
			"	"	"
1912—Apr. 27	R.	16	3.11	3.02	+0.09
May 1	R.	16	3.04	3.02	+ .02
2	R.	15	2.95	3.02	− .07
3	R.	15	3.02	3.03	− .01
4	R.	16	2.98	3.03	− .05
9	R.	16	3.00	3.03	− .03
10	R.	16	3.06	3.03	+ .03
13	R.	4	3.04	.....	.....
18	R.	16	2.92	3.04	− .12
20	R.	15	3.03	3.04	− .01
26	R.	16	3.10	3.06	+ .04
27	R.	16	3.06	3.06	.00
30	R.	16	3.07	3.07	.00
31	R.	16	3.07	3.07	.00
June 1	R.	16	3.08	3.07	+ .01
5	R.	4	3.04	.....	.....
8	R.	16	3.16	3.09	+ .07
9	R.	16	3.20	3.10	+ .10
10	R.	16	3.08	3.10	− .02
13	R.	8	3.16	.....	.....
20	R.	15	3.15	3.12	+ .03
July 2	R.	16	3.15	3.16	− .01
3	R.	16	3.12	3.16	− .04
5	R.	16	3.16	3.16	.00
7	R.	16	3.19	3.17	+ .02
8	R.	6	3.17	.....	.....
19	F.	11	3.25	3.20	+ .05
25	F.	8	3.04	.....	.....
26	F.	12	3.16	3.22	− .06
30	F.	15	3.23	3.23	.00
Aug. 2	F.	1	3.30	.....	.....
3	F.	15	3.29	3.24	+ .05
5	F.	15	3.27	3.24	+ .03
7	F.	16	3.24	3.25	− .01
11	F.	4	3.21	.....	.....
12	F.	16	3.28	3.26	+ .02
20	F.	8	3.22	.....	.....
23	F.	8	3.39	.....	.....
24	F.	16	3.38	3.29	+ .09
27	F.	1	3.46	.....	.....
29	F.	5	3.37	.....	.....
31	F.	14	3.33	3.31	+ .02
Sept. 5	F.	16	3.28	3.33	− .04
6	F.	8	3.30	.....	.....
8	F.	8	3.39	.....	.....
9	F.	15	3.25	3.33	− .08
10	F.	15	3.32	3.33	− .01
12	F.	15	3.40	3.34	+ .06
17	F.	9	3.36	.....	.....
20	F.	16	3.34	3.36	− .02
28	R.	8	3.32	.....	.....
30	R.	16	3.39	3.37	+ .02
Oct. 1	R.	15	3.44	3.37	+ .07
2	R.	16	3.46	3.37	+ .09
3	R.	3	3.36	.....	.....
4	R	11	3.30	3.38	− .08
5	R.	16	3.45	3.38	+ .07
6	R.	15	3.43	3.38	+ .05
7	R.	16	3.42	3.39	+ .03
9	R.	1	3.41	.....	.....
11	R.	7	3.41	.....	.....
14	R.	2	3.40	.....	.....
15	R.	15	3.43	3.39	+ .04
16	R.	16	3.32	3.39	− .07
20	R.	16	3.43	3.40	+ .03
26	R.	16	3.50	3.41	+ .09
27	R.	16	3.40	3.41	− .01
28	R.	9	3.41	.....	.....
29	R.	16	3.40	3.41	− .01
30	R.	16	3.48	3.42	+ .06
Nov. 1	R.	3	3.52	.....	.....
3	R.	16	3.36	3.42	− .06
5	R.	2	3.10	.....	.....
10	R.	16	3.42	3.43	− .01
11	R.	16	3.38	3.43	− .05
12	R.	2	3.40	.....	.....
16	R.	16	3.30	3.42	− .12
18	R.	16	3.36	3.42	− .06
19	R.	16	3.41	3.42	− .01
20	R.	16	3.40	3.42	− .02
22	R.	15	3.47	3.43	+ .04
25	R.	8	3.44	.....	.....
26	R.	11	3.44	3.43	+ .01
30	R.	16	3.46	3.43	+ .03
Dec. 3	R.	16	3.42	3.43	− .01
6	R.	16	3.47	3.43	+ .04
7	R.	2	3.47	.....	.....
9	R.	13	3.44	3.43	+ .01
12	R.	16	3.51	3.43	+ .08
13	R.	16	3.44	3.43	+ .01
14	R.	11	3.54	3.43	+ .11
15	R.	5	3.31	.....	.....
20	R.	16	3.44	3.43	+ .01
21	R.	10	3.54	3.43	+ .11
22	R.	1	3.26	.....	.....
1913—Jan. 1	R.	15	3.43	3.42	+0.01
4	D.	15	3.32	3.42	− .10
9	R.	15	3.42	3.42	.00
13	R.	16	3.40	3.42	− .02
14	R.	16	3.42	3.42	.00
15	R.	6	3.34	.....	.....
18	D.	16	3.51	3.41	+ .10
21	R.	15	3.52	3.40	+ .12
22	D.	16	3.38	3.40	− .02
25	D.	11	3.33	3.40	− .07
26	D.	9	3.42	.....	.....
30	D.	13	3.40	3.39	+ .01
Feb. 1	R.	16	3.50	3.39	+ .11
4	R.	16	3.41	3.39	+ .02
6	R.	15	3.37	3.38	− .01
7	D.	16	3.46	3.38	+ .08
8	D.	14	3.41	3.38	+ .03
12	R.	16	3.43	3.37	+ .06
13	R.	16	3.31	3.37	− .06
14	R.	16	3.22	3.36	− .14
18	D.	16	3.41	3.36	+ .05
21	R.	1	3.72	.....	.....
23	R.	10	3.39	3.34	+ .05
25	D.	16	3.40	3.33	+ .07
28	R.	12	3.27	3.33	− .06
Mar. 2	D.	14	3.35	3.32	+ .03
5	R.	15	3.34	3.31	+ .03
6	D.	11	3.45	3.30	+ .15
7	R.	12	3.33	3.30	+ .03
9	R.	6	3.24	.....	.....
11	D.	15	3.26	3.30	− .04
12	R.	3	3.25	.....	.....
17	D.	16	3.37	3.27	+ .10
18	R.	15	3.29	3.27	+ .02
20	R.	15	3.26	3.27	− .01
22	D.	16	3.23	3.26	− .03
27	D.	16	3.22	3.24	− .02
28	D.	16	3.20	3.24	− .04
31	R.	11	3.15	3.23	− .08
Apr. 1	D.	16	3.16	3.23	− .07
5	D.	14	3.22	3.22	.00
6	R.	15	3.14	3.21	− .07
8	R.	16	3.19	3.21	− .02
17	R.	16	3.24	3.18	+ .06
18	R.	2	3.11	.....	.....
19	D.	15	3.36	3.18	+ .18
20	R.	16	3.19	3.18	+ .01
21	D.	14	3.15	3.17	− .02
22	R.	16	3.16	3.16	.00
24	D.	13	3.14	3.16	− .02
25	R.	16	3.12	3.16	− .04
29	D.	14	3.21	3.15	+ .06
May 1	R.	16	3.22	3.15	+ .07
2	D.	13	3.13	3.14	− .01
3	R.	15	3.18	3.14	+ .04
8	R.	13	3.07	3.13	− .06
10	R.	15	3.07	3.13	− .06
11	R.	16	3.18	3.12	+ .06
19	R.	8	3.12	.....	.....
20	R.	14	3.12	3.11	+ .01
24	R.	16	3.14	3.10	+ .04
31	R.	16	3.14	3.09	+ .05
June 2	R.	16	3.04	3.09	− .05
5	R.	16	2.96	3.08	− .12
6	R.	16	3.04	3.08	− .04
9	R.	8	3.16	.....	.....
13	R.	16	3.12	3.07	+ .05
17	R.	14	3.09	3.07	+ .02
18	R.	9	2.93	.....	.....
28	R.	11	3.02	3.06	− .04
29	R.	16	3.12	3.06	+ .06
30	R.	15	3.06	3.06	.00
July 3	R.	16	2.98	3.06	− .08
7	R.	15	3.06	3.06	.00
8	R.	16	3.07	3.06	+ .01
10	R.	2	2.95	.....	.....
11	R.	1	3.04	.....	.....
13	R.	2	2.86	.....	.....
14	R.	3	2.82	.....	.....
16	R.	15	3.08	3.06	+ .02
18	R.	16	3.12	3.06	+ .06
21	R.	15	3.08	3.06	+ .02
22	R.	7	3.07	.....	.....
25	R.	16	3.08	3.06	+ .02
26	R.	15	3.14	3.06	+ .08
Aug. 2	R.	16	3.07	3.06	+ .01
4	R.	15	3.10	3.06	+ .04
5	R.	15	3.07	3.07	.00
7	R.	16	3.07	3.07	.00
11	R.	13	3.04	3.07	− .03
14	R.	5	3.12	.....	.....
15	R.	16	3.10	3.08	+ .02
16	R.	16	3.00	3.08	− .08
19	R.	16	3.10	3.09	+ .01
20	R.	16	3.10	3.09	+ .01

TABLE 50.—*Mean daily latitudes, visual*—Continued.

Date.	Observer.	Number of pairs.	Mean ϕ.	Curve ϕ.	v'.
			″	″	″
1913—Aug. 24	R.	16	3.16	3.09	+0.07
25	R.	16	3.08	3.09	− .01
Sept. 4	R.	16	3.08	3.10	− .02
5	R.	15	3.03	3.10	− .07
9	R.	16	3.10	3.11	− .01
10	R.	16	3.04	3.12	− .08
11	R.	8	3.01	.....	.....
22	R.	16	3.12	3.14	− .02
23	R.	15	3.15	3.14	+ .01
24	R.	16	3.12	3.15	− .03
25	R.	15	3.17	3.15	+ .02
27	R.	16	3.07	3.15	− .08
28	R.	7	3.07	.....	.....
Oct. 3	R.	16	3.19	3.15	+ .04
4	R.	16	3.18	3.16	+ .02
12	R.	7	3.18	.....	.....
13	R.	16	3.22	3.18	+ .04
14	R.	16	3.22	3.18	+ .04
16	R.	16	3.23	3.19	+ .04
22	R.	16	3.16	3.20	− .04
26	R.	16	3.22	3.22	.00
27	R.	2	3.18	.....	.....
29	R.	5	3.09	.....	.....
Nov. 1	R.	15	3.16	3.23	− .07
4	R.	16	3.29	3.23	+ .06
5	R.	16	3.19	3.24	− .05
6	R.	16	3.23	3.24	− .01
17	R.	15	3.25	3.27	− .02
21	R.	16	3.32	3.28	+ .04
22	R.	15	3.31	3.28	+ .03
Dec. 5	R.	16	3.29	3.33	− .04
9	R.	16	3.32	3.34	− .02
11	R.	15	3.41	3.34	+ .07
12	R.	4	3.44	.....	.....
13	R.	16	3.39	3.34	+ .05
15	R.	16	3.31	3.35	− .04
18	R.	16	3.40	3.36	+ .04
19	R.	16	3.33	3.36	− .03
22	R.	7	3.35	.....	.....
27	R.	16	3.40	3.37	+ .03
29	R.	16	3.41	3.37	+ .04
1914—Jan. 1	M.	4	3.37	.....	.....
6	R.	6	3.35	.....	.....
11	M.	14	3.47	3.39	+ .08
18	M.	2	3.06	.....	.....
25	R.	14	3.47	3.40	+ .07
26	R.	8	3.39	.....	.....
29	R.	16	3.37	3.41	− .04
Feb. 1	M.	15	3.24	3.41	− .17
2	R.	14	3.30	3.41	− .11
7	M.	13	3.55	3.41	+ .14
8	R.	4	3.51	.....	.....
9	M.	16	3.24	3.41	− .17
11	R.	16	3.42	3.42	.00
15	M.	2	3.47	.....	.....
16	R.	16	3.38	3.42	+ .04
17	M.	16	3.53	3.42	+ .11
21	R.	15	3.41	3.42	− .01
24	M.	15	3.42	3.42	.00
26	R.	16	3.46	3.42	+ .04
Mar. 8	R.	16	3.35	3.42	− .07
10	M.	4	3.26	.....	.....
12	M.	16	3.48	3.42	+ .06
13	R.	16	3.34	3.42	− .08
14	M.	8	3.44	.....	.....
15	R.	16	3.43	3.42	+ .01
20	M.	16	3.54	3.42	+ .12
24	R.	16	3.40	3.41	− .01
Apr. 3	R.	15	3.42	3.40	+ .02
5	M.	16	3.40	3.40	.00
6	R.	16	3.45	3.40	+ .05
9	M.	15	3.48	3.40	+ .08
10	R.	16	3.36	3.39	− .03
12	R.	16	3.36	3.39	− .03
13	R.	16	3.33	3.39	− .06
17	R.	15	3.44	3.39	+ .05
18	M.	16	3.44	3.39	+ .05
21	M.	15	3.40	3.38	+ .02
1914—Apr. 23	M.	12	3.45	3.38	+0.07
27	R.	15	3.36	3.37	− .01
28	M.	3	3.02	.....	.....
May 2	M.	16	3.32	3.36	− .04
11	R.	8	3.29	.....	.....
15	R.	16	3.44	3.31	+ .13
16	M.	15	3.43	3.31	+ .12
17	R.	16	3.30	3.31	− .01
18	M.	14	3.23	3.30	− .07
19	R.	16	3.38	3.30	+ .08
21	M.	15	3.34	3.30	+ .04
24	R.	4	3.20	.....	.....
25	R.	16	3.16	3.28	− .12
26	M.	16	3.16	3.28	− .12
30	R.	16	3.22	3.27	− .05
31	M.	16	3.24	3.26	− .02
June 2	R.	16	3.32	3.25	+ .07
7	M.	14	3.22	3.24	− .02
11	M.	1	2.91	.....	.....
13	M.	1	3.06	.....	.....
15	R.	1	3.16	.....	.....
16	M.	15	3.24	3.22	+ .02
17	R.	16	3.28	3.21	+ .07
19	R.	16	3.28	3.21	+ .07
20	M.	3	3.12	.....	.....
29	R.	15	3.22	3.19	+ .03
July 2	R.	2	3.13	.....	.....
3	R.	12	3.06	3.18	− .12
5	R.	8	3.15	.....	.....
12	R.	.....	.....	.....	.....
15	R.	14	3.13	3.15	− .02
16	R.	16	3.09	3.15	− .06
17	R.	16	3.12	3.15	− .03
18	R.	8	3.08	.....	.....
19	R.	16	3.24	3.14	+ .10
20	R.	15	3.10	3.14	− .04
21	R.	16	3.06	3.14	− .08
30	M.	14	3.18	3.13	+ .05
31	M.	15	3.12	3.13	− .01
Aug. 3	M.	15	3.16	3.13	+ .03
13	R.	15	3.04	3.12	− .08
15	R.	16	3.15	3.12	+ .03
16	M.	15	3.16	3.12	+ .04
18	M.	15	3.04	3.12	− .08
19	R.	11	3.09	3.12	− .03
20	M.	11	2.95	3.11	− .16
22	R.	16	3.12	3.11	+ .01
23	M.	14	3.13	3.11	+ .02
30	M.	16	3.10	3.10	.00
31	R.	15	3.11	3.10	+ .01
Sept. 1	M.	16	3.06	3.10	− .04
4	R.	16	3.16	3.10	+ .06
5	M.	16	3.18	3.10	+ .08
7	M.	11	3.16	3.10	+ .06
8	R.	8	3.09	.....	.....
9	M.	16	3.20	3.10	+ .10
13	M.	16	3.10	3.09	+ .01
14	R.	16	3.06	3.09	− .03
19	M.	16	3.10	3.09	+ .01
20	R.	15	3.04	3.09	− .05
21	M.	15	3.09	3.09	.00
22	R.	16	3.07	3.09	− .02
26	M.	16	3.07	3.09	− .02
28	R.	16	3.02	3.09	− .07
29	M.	14	3.04	3.09	− .05
30	R.	16	3.12	3.09	+ .03
Oct. 1	M.	15	3.15	3.09	+ .06
2	R.	16	3.08	3.09	− .01
5	M.	14	3.10	3.09	+ .01
9	R.	3	3.01	.....	.....
10	M.	6	3.10	.....	.....
12	M.	12	3.09	3.09	.00
19	M.	16	3.29	3.09	+ .20
20	R.	13	3.05	3.09	− .04
21	M.	16	3.15	3.09	+ .06
22	R.	11	3.06	3.09	− .03
23	M.	16	3.00	3.09	− .09
31	R.	16	2.98	3.09	− .11

DISCUSSION OF VISUAL LATITUDES.

From the daily means the following monthly mean latitudes for the standard periods adopted by Albrecht and used in the photographic reductions as well are obtained:

TABLE 51.—*Mean monthly latitudes, visual.*

$\phi = 39° 8' 10''+$

Limiting dates.	Mean date.	T.	Number of nights.	Number of observations.	Mean ϕ.	Corrected mean ϕ.
		y			"	"
1911—June 9-July 9	June 25	0.482	17	205	3.474	3.474
July 12-Aug. 11	July 29	.575	16	180	3.565	3.565
Aug. 16-Sept. 22	Sept. 10	.693	11	116	3.538	3.538
Sept. 26-Oct. 30	Oct. 16	.791	13	166	3.473	3.473
Nov. 2-Dec. 6	Nov. 20	.887	15	190	3.352	3.352
Dec. 7-Jan. 4	Dec. 18	.964	5	51	3.312	3.312
1912—Jan. 7-Jan. 27	Jan. 18	.047	10	138	3.221	3.300
Feb. 4-Feb. 23	Feb. 10	.110	9	116	3.105	3.184
Feb. 27-Mar. 17	Mar. 8	.183	7	107	3.081	3.160
Mar. 22-Apr. 11	Apr. 3	.255	9	127	3.021	3.100
Apr. 19-May 10	May 1	.331	9	142	3.014	3.093
May 13-June 8	May 28	.405	10	135	3.061	3.140
June 9-July 8	June 25	.482	9	125	3.152	3.231
July 19-Aug. 12	Aug. 2	.586	10	113	3.232	3.311
Aug. 20-Sept. 20	Sept. 6	.682	14	154	3.331	3.410
Sept. 28-Nov. 1	Oct. 14	.786	21	249	3.417	3.496
Nov. 3-Dec. 6	Nov. 20	.887	15	198	3.404	3.483
Dec. 7-Jan. 4	Dec. 19	.966	11	120	3.446	3.525
1913—Jan. 9-Jan. 30	Jan. 19	.052	10	133	3.422	3.501
Feb. 1-Feb. 23	Feb. 10	.112	11	152	3.392	3.471
Feb. 25-Mar. 20	Mar. 9	.186	12	150	3.324	3.403
Mar. 22-Apr. 8	Mar. 31	.246	8	120	3.190	3.269
Apr. 17-May 11	Apr. 28	.323	15	210	3.175	3.254
May 19-June 6	May 30	.411	7	102	3.076	3.155
June 9-July 8	June 26	.485	10	136	3.063	3.142
July 10-Aug. 11	July 28	.572	15	167	3.076	3.155
Aug. 14-Sept. 22	Aug. 30	.663	13	188	3.081	3.160
Sept. 23-Nov. 1	Oct. 10	.775	16	210	3.169	3.248
Nov. 4-Dec. 5	Nov. 16	.876	7	110	3.268	3.347
Dec. 9-Jan. 1	Dec. 18	.964	11	142	3.372	3.451
1914—Jan. 6-Jan. 29	Jan. 21	.058	6	60	3.407	3.486
Feb. 1-Feb. 24	Feb. 12	.118	11	142	3.391	3.470
Feb. 26-Mar. 20	Mar. 11	.192	8	108	3.427	3.506
Mar 24-Apr. 13	Apr. 6	.263	8	126	3.400	3.479
Apr. 17-May 11	Apr. 25	.315	8	100	3.380	3.459
May 15-June 7	May 24	.394	13	190	3.285	3.364
June 11-July 5	June 23	.476	11	90	3.206	3.285
July 12-Aug. 13	July 24	.561	12	160	3.122	3.201
Aug. 15-Sept. 22	Sept. 3	.674	21	306	3.104	3.183
Sept. 26-Oct. 31	Oct. 10	.775	16	216	3.086	3.165

Total number of nights 460
Total number of pairs 5,950

In order to be able to draw a curve which shall represent all the monthly mean latitudes given in the sixth column of this table, special treatment is necessary, due to the fact that the program of observation had been changed in January, 1912, when 16 pairs were replaced by new ones. This is in accord with the general policy of a change of program every six years, made necessary on account of precessional motion.

The mean latitude adopted by Albrecht for Gaithersburg for the 1906–1911 period is 39° 8′ 13″.23. It will be necessary to determine a constant K to be applied to all of the latitudes in the period 1912–1914, such that the true mean latitude for this period is Albrecht's adopted value. When this is done, the breach of continuity in the above table between 1911 and 1912 will have been bridged and the entire series can be treated as one.

To determine K, the mean latitudes for the years 1912–1914 only, in the sixth column of the above table, were plotted and a smooth curve drawn through the points obtained. From this graph the latitudes at the even tenth of the year were read off, with results shown in the following table:

TABLE 52.—*Latitudes (visual) from smooth curve.*

Epoch.	ϕ	Epoch.	ϕ	Epoch.	ϕ	Epoch.	ϕ	Epoch.	ϕ
	"		"		"		"		"
1912.1	3.14	1912.6	3.24	1913.1	3.38	1913.6	3.07	1914.1	3.41
.2	3.05	.7	3.34	.2	3.29	.7	3.12	.2	3.42
.3	3.02	.8	3.40	.3	3.18	.8	3.20	.3	3.38
.4	3.06	.9	3.43	.4	3.09	.9	3.20	.4	3.28
.5	3.15	1913.0	3.43	.5	3.06	1914.0	3.38	.5	3.18

The true mean latitude can now be determined in the same way as the true mean photographic latitude (p. 78). The mean of the latitudes in this table is 3″.240. The mean value of V_n (Table 25) for the epochs 1912.1 to 1914.5 is +0″.089. The true mean latitude is accordingly 3″.151. In order to join the curves before and after 1912.0, therefore, it is necessary to add 0″.079 to the latitudes in the sixth column (mean φ) of Table 51 in the years 1912–14. Hence

$$K = +0''.079.$$

This result can be interpreted as indicating that the mean declination system of the new program (1912–17) is less than the old system (1906–11) by 0″.079. The last column contains the latitudes corrected for this difference.

In the following table are given the mean visual latitudes φ_v reduced to a homogeneous system as just explained, for each tenth of a year, obtained from the smooth curve (plate P) drawn through the plotted values of "Corrected mean φ" of the preceding table.

In the third column the variation of the latitude is obtained from the numbers in the preceding column, assuming a true mean latitude of 3″.23, whence

$$V_v = \varphi_v - 3''.23.$$

V'_v (fourth column) is the V_v of Table 25, or Albrecht's provisional variation for Gaithersburg.

The column $V_v - V'_v$ is of the greatest importance, as showing the difference between Albrecht's provisional variation of latitude for Gaithersburg and the present definitive derivation, using all the observations made with the visual instrument. Albrecht employs five-sixths of these observations, so that the difference can not be due to neglect of the remaining one-sixth. Examination of the column of differences, $V_v - V'_v$, shows a seasonal periodicity, proving that the discrepancies are due to the corrections to the star groups (p. 116). Thus is reopened the old and debated question of the proper treatment of group differences and group corrections. Albrecht has adopted the method of computing the group corrections from the mean results of all six stations combined, which he uses in obtaining the variation curve for any single station, such as Gaithersburg. In the above derivation of φ_v we are necessarily limited to obtaining the group corrections from the Gaithersburg observations alone. Moreover the writer believes this to be the more logical process, as eliminating systematic errors peculiar to the instrument and station.

The new normal curve V''_n contained in the sixth column is computed from the formula

$$V''_n = V_n + 0.359\ (V_v - V'_v),$$

as explained on page 76. For V_n, see Table 25. V''_n is the normal curve shown in plate P, lower half, with which the visual curve is compared.

The last column contains the differences between the observed and normal curves.

TABLE 53.—*Comparison of visual and normal variation of latitude.*

Epoch.	ϕ_v.	V_v.	V'_v (Albrecht).	$V_v - V'_v$.	V''_n.	$V_v - V''_n$.	Epoch.	ϕ_v.	V_v.	V'_v (Albrecht).	$V_v - V'_v$.	V''_n.	$V_v - V''_n$.
	″	″	″	″	″	″		″	″	″	″	″	″
1911.5	3.51	+0.28	+0.27	+0.01	+0.27	+0.01	1913.2	3.37	+0.14	+0.13	+0.01	+0.11	+0.03
.6	3.56	+ .33	+ .33	.00	+ .34	− .01	.3	3.26	+ .03	.00	+ .03	+ .03	.00
.7	3.53	+ .30	+ .30	.00	+ .31	− .01	.4	3.17	− .06	− .08	+ .02	− .03	− .03
.8	3.44	+ .21	+ .22	− .01	+ .22	− .01	.5	3.14	− .09	− .09	.00	− .05	− .04
.9	3.37	+ .14	+ .12	+ .02	+ .14	.00	.6	3.15	− .08	− .06	− .02	− .05	− .03
1912.0	3.29	+ .06	+ .03	+ .03	+ .04	+ .02	.7	3.20	− .03	− .03	.00	− .01	− .02
.1	3.22	− .01	− .06	+ .05	− .05	+ .04	.8	3.28	+ .05	+ .01	+ .04	+ .05	.00
.2	3.13	− .10	− .11	+ .01	− .12	+ .02	.9	3.37	+ .14	+ .08	+ .06	+ .13	+ .01
.3	3.10	− .13	− .14	+ .01	− .13	.00	1914.0	3.46	+ .23	+ .14	+ .09	+ .22	+ .01
.4	3.14	− .09	− .11	+ .02	− .08	− .01	.1	3.49	+ .26	+ .20	+ .06	+ .28	− .02
.5	3.23	.00	+ .03	− .03	+ .04	− .04	.2	3.50	+ .27	+ .26	+ .01	+ .31	− .04
.6	3.32	+ .09	+ .15	− .06	+ .14	− .05	.3	3.46	+ .23	+ .24	− .01	+ .25	− .02
.7	3.42	+ .19	+ .21	− .02	+ .20	− .01	.4	3.36	+ .13	+ .11	+ .02	+ .16	− .03
.8	3.48	+ .25	+ .23	+ .02	+ .24	+ .01	.5	3.26	+ .03	+ .01	+ .02	+ .10	− .07
.9	3.51	+ .28	+ .22	+ .06	+ .24	+ .04	.6	3.19	− .04	.....	.....	.....	.....
1913.0	3.51	+ .28	+ .20	+ .08	+ .23	+ .05	.7	3.17	− .06	.....	.....	.....	.....
.1	3.46	+ .23	+ .19	+ .04	+ .18	+ .05	.8	3.16	− .07	.....	.....	.....	.....

Kimura term.—The average value of the Kimura term has already been obtained (p. 79) for this period (1911–1914) from the results of both visual and photographic instruments. But the results of the present definitive reduction of the visual observations differ considerably from those used in the previous investigation of the Kimura term, so that a redetermination of it is necessary. To this end the residuals $V_v - V''_n$ in the preceding table are grouped by seasons as follows. Mean z (Albrecht) is obtained from Table 26.

	Mean $V_v - V''_n$.	Mean z (Albrecht).
Summer (0.4, 0.5, 0.6)	$-0''.030$	$+0''.002$
Winter (0.9, 0.0, 0.1)	+ .022	+ .057
Difference	+ .052	+ .055
Corrected for phase	+ .060	+ .063

The mean amplitude of the Kimura term adopted by Albrecht is thus 0″.063. The definitive Gaithersburg results show a correction to this amplitude of 0″.060. The resulting amplitude of the Kimura term is accordingly 0″.123, as compared with the value 0″.079 previously found and as compared with the value 0″.105 given by the photographic instrument. The results given by the two instruments are thus seen to be in good agreement. We have, finally, double amplitude of the Kimura term, visual instrument, 0″.123; photographic instrument, 0″.105.

Final results for the Kimura term can not be obtained until the definitive values for the polar motion during this period have been published by the Central Bureau of the International Geodetic Association. This will probably not appear for at least five years. The endeavor has been to leave the results of this investigation in such a form that the definitive discussion can easily be made when the necessary data are at hand.

In Plate P the observed photographic and visual latitude curves have been plotted, the values being taken from Tables 25 and 53, respectively. Smooth curves have not been drawn through the monthly plotted values, the connection being made by straight lines only.

The corresponding normal curves are shown as broken lines. They are the values V'_n and V''_n of Tables 25 and 53, respectively.

Fluctuations.—Comparison of the two observed curves (full line) with the corresponding broken or normal curves in Plate P clearly shows the presence of the latitude fluctuations described on page 78. They are especially pronounced during the winters of 1912–13 and 1913–14, as well as during the summer of 1914. From these curves a count has been made of the number of times the monthly mean latitudes given by the two instruments differ from the normal curves in the *same* direction and in the *opposite* directions. The numbers are 23 and 8 respectively, showing the correlation to be exceedingly well marked. This is a result of the greatest importance. Aside from its theoretical interest, it shows that the apparent latitude of a station is not to be obtained from the normal variation published by the International Geodetic Association, but for the highest accuracy it must be determined from special observations made at the station itself.

PROBABLE ERRORS, VISUAL.

The accidental probable error of observing one pair, given separately for each group annually, is to be found in the following table, it being computed in the same way as for the photographic instrument (p. 81). The second column of the table contains the designation of the observer and the number of nights the corresponding complete group had been observed by him.

TABLE 54.—*Probable errors of one pair, visual.*

Group and year.	Observers and number of groups.	Mean probable error.	Group and year.	Observers and number of groups.	Mean probable error.	Group and year.	Observers and number of groups.	Mean probable error.
		″			″			″
I—1912	R., 25	±0.110	V—1914	R., 7; M., 5	±0.133	X—1913	R. 13	±0.094
1913	R., 16	.104	VI—1912-13	R., 15; D., 8	.113	1914	R., 7; M., 1	.101
1914	R., 4; M., 5	.109	1914	R., 9; M., 3	.127	XI—1912	——; F., 10	.134
II—1912	R., 13	.117	VII—1912-13	R., 22; D., 9	.117	1913	R., 19	.107
1913	R., 14	.098	1914	R., 12; M., 6	.146	1914	R., 13; M., 9	.097
III—1912-13	R., 19; D., 6	.123	VIII—1912-13	R., 19	.096	XII—1912	R., 13; F., 7	.105
1914	R., 10; M., 1	.123	1914	R., 25; M., 7	.110	1913	R., 20	.114
IV—1912-13	R., 23; D., 4	.117	IX—1912	R., 14	.102	1914	R., 12; M., 15	.117
1914	R., 3; M., 3	.134	1913-14	R., 21; M., 4	.113			
V—1912-13	R., 20; D., 4	.109	X—1912	R., 7; F., 4	.107			

Weighted mean probable error ..... ±0″.113
Average v^2 for one star ..... .0235

Total number of complete groups utilized 501

In order to obtain the refraction errors (p. 103), it is necessary to compute the probable error for each observer. This is found by computing his average v^2 for a single pair from the individual values of v^2 for each group, whence the probable error is computed by the formula:

$$\text{P. e. of each observer} = \pm 0''.113\sqrt{\frac{v^2}{0.0235}}.$$

TABLE 55.—*Probable error by observers (one pair).*

Observer.	Period.	Average v^2 (one pair).	Resulting probable error.
		″	″
Frederick	July-Sept., 1912	0.0300	±0.128
Duvall	Jan.-May, 1913	.0392	.146
Mourhess	Jan.-June, 1914	.0472	.160
Do	July-Oct., 1914	.0237	.113
Ross	Jan.-May, 1913	.0169	[1].096
Do	Jan.-June, 1914	.0219	[1].109
Do	July-Oct., 1914	.0186	[1].101
Do	Table 54	.....	[1].104

[1] Mean, 0″.103.

NIGHT ERROR.

The night error can be defined as a disturbance to the latitude which persists during the period covered by the observations on any one night, having an origin outside the instrument, the observing room, or the observer. The disturbance may last for several days, or even have a period as great as a month. If of longer duration it becomes the "Systematische Refraktionsstorungen" of Albrecht ("Resultate," Bd. 2, pp. 186–188), and can not be disclosed by the method of treatment now to be outlined.

The night error can be best studied by comparing simultaneous observations with two instruments placed alongside. In the Astronomical Journal, No. 574, Schlesinger discusses the simultaneous observations of Marcuse and Preston at Waikiki in 1891–2 with the object of determining a night error. He found a pronounced effect of this kind whose value in terms of mean error was ±0″.08. This means that occasional disturbances amounting to 0″.20, due to atmospheric causes, affect the latitude. In view of the poor location at Waikiki, with mountains to the north and sea to the south, it is not surprising that so large a night error was found.

Prof. C. L. Doolittle has also discussed a simultaneous series of latitude observations made at Philadelphia with a zenith telescope and zenith tube, both visual instruments. He concludes from an examination of the larger residuals that disturbances affect both instruments similarly, and that a night error is accordingly present. No estimate was made of its mean value.

Albrecht in "Resultate," Bd. 2, page 190, discusses the observations of the six latitude stations of the International Geodetic Association from 1902–4 with a view to obtaining the value of the night error. The error was assumed to be due to a tilting of the isobaric surfaces. In order to furnish the necessary data for the discussion, 24 Talcott pairs of 60° zenith distance had been included in the program of observation. These were observed during a period of six years in conjunction with 72 zenith pairs. From an examination of the larger residuals (0″.10 and over) he concludes that no effect of this kind is present. Later, Schlesinger discussed the same observations more at length (Publications of the Allegheny Observatory, Vol. 3, No. 8). He found that a slight tilting of the air strata actually did exist at times, having a mean value, in the sense of mean error, of ±0″.013, but concludes that this is so small as to be vanishing. These investigations are not conclusive however as to the existence of a night error, for other causes besides a tilting of the air strata may be operative. For example, a wedge-shaped mass of air might overlie a station, to which the methods of treatment adopted by Albrecht and Schlesinger would not apply. Let

V=p. e. of one night's observation with the visual instrument formed from the v's of Table 23;
P=p. e. of one night's observation with the photographic-instrument, formed from the v's of Table 50, called v';
D=p. e. of a single *difference*, $v-v'$;
E=p. e. of the unknown night error;

V, P, and D are computed on the assumption that the latitude curves for the two instruments are not subject to error, so that

$$V^2=K\frac{\Sigma v^2}{n},\quad P^2=K\frac{\Sigma v'^2}{n'},\quad D^2=K\frac{\Sigma(v-v')^2}{n''},\quad K=(0.674)^2;$$

n, n', and n'' are the respective number of nights utilized. We have then to determine E, where

$$2\,E^2=V^2+P^2-D^2. \tag{1}$$

In deriving this equation the probable errors of the latitude curves used as base are considered. They disappear however through cancellation in forming E^2.

On account of the great difference in the accuracy of the photographic observations before and after February, 1913, two separate determinations of E from (1) have been made, corresponding to these two periods. The results are as follows:

	V.	P.	D.	E.
	″	″	″	″
Period I—June, 1911–Feb. 5, 1913	±0.038	±0.047	±0.057	±0.014
Period II—Feb. 6, 1913–Oct., 1914	± .042	± .034	± .048	± .018

The agreement in the two values of E is very good, showing it to be undoubtedly real. We have finally

$$E=\pm 0''.016.$$

This value does not differ greatly from Schlesinger's, quoted above. The agreement of the two investigations made along totally different lines gives strong support to the hypothesis considered. A slight tilting of the air strata as supposed by Schlesinger is accordingly probably present, upon which other minute irregularities, such as wedge-shaped air formations, may be superimposed.

The two series will now be considered from other standpoints to obtain strengthening evidence and additional facts.

If a night error is present it should be revealed by a comparison of the signs of the residuals v and v' of Tables 23 and 50. Omitting cases where v and v' are one or both zero, it is found that they have the same sign in 149 cases, opposite signs in 108, so that correlation is thus disclosed, confirming the reality of E.

Study of the larger residuals.—It is important to examine the larger residuals v and v', of amount 0″.10 and over. In the following table the dates and values of v and v' have been collected in which one or both have values 0″.10 or greater. These will for convenience be called "abnormal nights."

TABLE 56.—*Night errors of 0″.10 and over (both instruments).*

1911			1912			1913			1914		
Date.	Vis.	Ph.	Date.	Vis.	Ph.	Date.	Vis.	Ph.	Date.	Vis.	Ph.
	″	″		″	″		″	″		″	″
June 20..	+0.07	+0.24	Jan. 27...	+0.01	−0.11	Jan. 4...	−0.10	−0.14	Feb. 1...	−0.17	+0.01
July 22..	− .10	− .01	Feb. 5...	− .03	− .13	14...	.00	+ .12	2...	− .11	+ .07
Aug. 10..	+ .01	+ .10	6...	− .12	+ .05	18...	+ .10	− .11	7...	+ .14	− .07
Nov. 16..	− .02	− .21	9...	− .06	− .10	21...	+ .12	+ .02	8...	+ .10	+ .10
19..	+ .01	+ .13	13...	+ .11	+ .03	Feb. 1...	+ .11	+ .07	9...	− .17	− .07
22..	− .02	+ .11	28...	− .03	+ .12	8...	+ .03	− .13	17...	+ .11	+ .06
Dec. 4..	+ .04	+ .13	Mar. 13...	+ .10	+ .04	14...	− .14	− .03	24...	.00	− .14
19..	+ .11	+ .09	16...	+ .09	− .11	Mar. 6...	+ .15	− .01	Mar. 20...	+ .12	− .14
28..	+ .07	+ .18	Apr. 3...	− .08	+ .13	17...	+ .10	+ .01	Apr. 9...	+ .08	+ .21
			May 18...	− .12	− .05	31...	− .08	− .10	May 15...	+ .13	+ .05
			June 8...	+ .07	− .11	Apr. 19...	+ .18	+ .16	16...	+ .12	+ .04
			9...	+ .10	− .07	21...	− .02	+ .10	25...	− .12	+ .09
			Aug. 23...	+ .10	− .12	June 5...	− .12	− .05	26...	− .12	− .02
			Sept. 20...	− .02	+ .12	17...	+ .02	+ .18	July 3...	− .12	.....
			28...	− .05	− .15				19...	+ .10	+ .03
			Oct. 1...	+ .07	+ .17				Aug. 20...	− .16	− .03
			2...	+ .09	+ .10				Sept. 9...	+ .10	+ .06
			Nov. 3...	− .06	+ .14				28...	− .07	− .10
			10...	− .01	+ .17				Oct. 19...	+ .20	.00
			11...	− .05	− .10				31...	− .11	.....
			16...	− .12	+ .06						
			Dec. 12...	+ .08	+ .10						
			14...	+ .11	+ .01						
			21...	+ .11	.00						

By counting in this table the number of abnormal nights with each instrument we find—

Number of abnormal nights per year, visual instrument	11
Number of abnormal nights per year, photographic (Period I)	16
Number of abnormal nights per year, photographic (Period II)	6

The nearly threefold reduction in the number of abnormal nights seen here in the two periods with the photographic instrument (before and after February, 1913), is further proof of the importance of the changes made in this instrument.

We find from the above table that there are only six nights out of a total of 67 on which *both* instruments give abnormal results, on three of which the instruments show deviations in the same direction and on the remaining three opposite deviations. The conclusion is irresistible that *abnormal nights with the two instruments are not correlated, and they are therefore not due to atmospheric disturbances*, as has commonly been supposed.

Using all the residuals in Table 56, we find they are of the same sign on 39 nights and of opposite signs on 22 nights. This in no way affects the conclusion just reached, but corroborates the results of the general count of signs made on the preceding page.

The conclusion is reached that abnormal nights are of instrumental origin. This hypothesis will now be examined and a value of the instrumental probable error obtained. For this it is necessary to know the accidental probable error e of observing one pair and the average number of pairs n. Calling I the instrumental probable error, we have

$$I^2 = V^2 - \frac{e^2_v}{n} - E^2, \text{ visual;}$$

$$I^2 = P^2 - \frac{e^2_p}{n} - E^2, \text{ photographic.}$$

The data used and the resulting values of I are as follows: K is obtained by combining I with the second term of these equations and is accordingly the total error, instrument plus observer.

	±	±	n	E.	I.	K.
Visual	V=0″.040;	e_v=0″.113;	14;	±0″.016;	±0″.021	±0″.037
Photographic (Period I)	P= .047;	e_p= .086;	8;	.016;	.032	.044
Photographic (Period II)	P= .034;	e_p= .060;	8;	.016;	.021	.030

The values found for I are not inconsiderable and show that both instruments are subject to what may be called an *instrumental night error*. The abnormal nights defined above, which were found not to be of atmospheric origin, are seen to result from the combined errors of observing and instrumental errors. We should expect from the values for K that night errors of the magnitude found would occasionally be observed. The fact that abnormal nights are not common to the two instruments is thus explained. The small atmospheric night error found, 0″.016, can not produce common deviations in the two instruments of more than 0″.05, which values are completely masked when only *abnormal* nights are considered.

Interpretation of E.—The meaning to be assigned to the common disturbance E is of some interest and subject to a great deal of doubt. It can be interpreted in a variety of ways: (*a*) As a short period term or terms in the latitude variation with double amplitude of about 0″.06 and with periods of a month or less (terms of daily period are excluded); (*b*) as regular or irregular fluctuations in the air strata, going through their cycles in periods up to a month; (*c*) fortuitous changes in the air strata, taking place without regularity and with sudden transitions.

In order to determine if there is any regularity in the common disturbance E, the mean of the residuals v and v' were formed for each night and plotted. No semblance of periodicity or regularity was disclosed. It must accordingly be concluded that (*a*) or (*b*) above will not fit the facts, and that (*c*) is the true explanation or description of the common night error.

DAILY VARIATION OF LATITUDE.

The method of determining the daily variation, briefly described, is as follows: The definitive individual latitudes are to be corrected for the latitude variation and arranged according to local mean or true time. They should then be grouped in periods one hour in length and means taken. Comparison of these means will give the daily variation sought. Since each pair enters into every hourly group, declination errors are eliminated. Even if the latitude variation had not been allowed for, the daily variation resulting would have been approximately freed from its effect; but by introducing the correction for it a complete elimination is assured.

Control of the daily variation of latitude thus found is furnished by a study of the group differences, provided a maximum or a minimum latitude is shown; for any group difference will show by its progression in value the daily variation *doubled*. If for example the latitude at midnight is a maximum, any group difference formed from observations after midnight will differ from the same group difference formed from observations before midnight by twice the daily variation which has taken place from the mean epoch of the local times to the epoch of midnight.

The visual observations made at the six latitude stations of the International Geodetic Association cover a period of but four hours during the night and, moreover, extend but little beyond midnight. They are therefore too limited to disclose any daily variation unless it should turn out to be large. It is shown elsewhere that the "closing sum" can be considered to be the result of a daily variation of latitude which is *progressive* during the night, and therefore without a maximum or minimum. The visual observations thus show an hourly increase in the latitude during the night of 0″.009. The hourly increase shown by the photographic instrument is only 0″.0013, so that these results are discordant. Reasons have been given elsewhere (p. 71) for believing the progressive increase in the latitude shown by the visual instrument to be of instrumental origin.

Kimura undertook at Mizusawa in 1903–4 a special series of observations with the Wanschaff zenith telescope, extending throughout the night, to determine a possible daily variation (A. N. 4040–1). A small variation was found by him, but not sufficiently marked to be conclusive.

The present series of observations with the photographic instrument was planned in such a way as to lead to a determination of the daily variation, if existent. To this end the

observations were made to cover practically the entire night, the working period averaging in length six hours in summer and nine hours in winter.

No definitive reduction of the observations for the daily variation has been made. A provisional discussion brought out the following facts:

During the winters of 1911–12 and 1913–14 a strong daily variation was shown, with a maximum at midnight, the latitude falling off more sharply during the morning hours than during the evening hours. At 7 p. m. the latitude appeared to be 0″.07 less than at midnight; at 4 a. m. it was 0″.10 less. But the observations during the winter of 1913–14 failed to show any such variation. To determine which of these contradictory results is the correct or normal one, a much longer series of observations than that undertaken here would be necessary. There is no way to determine which of the above two results is normal. The winter of 1913–14 was abnormal in that winter conditions did not set in until the middle of February, so that if the daily variation is due to normal winter conditions it might very well not have made its appearance during the winter of 1913–14.

For the summer observations more concordant results have been obtained. The observations of all four years agree in showing no daily variation.

In this connection it is of interest to note that the seasonal refraction discovered by Courvoisier (loc. cit.) leads to an apparent daily variation of latitude, giving a maximum at midnight, and of a more pronounced amplitude during the winter than during the summer months.

PERSONAL EQUATION WITH ZENITH TELESCOPE.

As five observers have taken part in the observations with the zenith telescope from June, 1911, to October, 1914, some discussion of their personal equation is desirable.

During an absence of the writer the visual observations from August 11 to September 29, 1911, were made by W. N. Ross (W. R.). Since alternation of observers is necessary to determine personal equation, the observations during this period do not lead to the relative personality sought, but the fact that the observed latitude variation (Plate P) does not show any abnormality during these two months is strong evidence that the relative personality is small.

In previous years several determinations of the relative personal equation of W. R. and R. were made. The values found were always small, of the order of 0″.01.

For a similar reason it is not possible to discuss the relative personal equation of C. W. Frederick and the writer. Mr. Frederick observed from July 19 to September 20, 1912. As in the case of W. R., we conclude from the smoothness of the curve that the relative personal equation must be small.

For the observers C. R. Duvall and C. A. Mourhess a determination of personality is possible owing to their having alternated with the writer in observing over a considerable period. To obtain the personality it is only necessary to form the weighted mean latitude from Table 50 for each observer during the period of his observations. The following are the results of this computation:

	ϕ	Number observations.
Relative personality of D. and R.:		
D., mean latitude, 1913, Jan. 1–May 3	3″.313	345
R., mean latitude, 1913, Jan. 1–May 3	3 .303	406
Personality, D.–R.	+.010	
Relative personality of M. and R.:		
M., mean latitude, 1914, Jan. 1–Oct. 31	3″.243	678
R., mean latitude, 1914, Jan. 1–Oct. 31	3 .239	812
Personality, M.–R.	+.004	

It can be concluded that there is no appreciable relative personal equation between the five observers taking part in the observations.

NUMBER OF OBSERVATIONS SUMMARIZED.

The following is a tabulation of the number of observations of various classes upon which the discussions in this memoir are based:

Photographic:	
Total number of latitude stars	6,627
Total number of scale stars and 4a	301
Common pair 7c (additional)	16
Total number of stars observed	6,944
Total number of star images photographed and measured (approximately)	41,600
Visual:	
Total number of visual pairs observed (Potsdam program)	5,950
Common pairs	376

SUMMARY OF RESULTS.

The principal results of this investigation can be summarized as follows:

1. The existence of the Kimura term has been verified, and definitely established as not of instrumental or personal origin, but is probably due to "seasonal sets" of the atmosphere.

2. The existence of "fluctuations" in the latitude has been proved, where by fluctuations is meant long period variations of the latitude which are not due to a motion of the pole nor are they a Kimura term. They may reach 0″.10 or more in semiamplitude.

3. From a comparison of results with the two instruments a "night error" has been found whose maximum double amplitude is about 0″.06. By night error is meant short period fluctuations in the latitude with irregular period up to one month. These again are probably of atmospheric origin.

4. Abnormal values of the mean nightly latitude occasionally found are of instrumental and not of atmospheric origin, at least at Gaithersburg.

5. Study of the "closing sums" points to the existence of an important error with visual zenith telescopes, of instrumental origin, producing a progressive increase in the latitude of 0″.009 per hour during the night. This error accounts for the abnormally large value of the aberration constant and the small value of the solar parallax which has uniformly been obtained with instruments of this type.

6. The accuracy of the individual latitudes obtained with the photographic instrument appears to be considerably greater than that obtained with the visual instrument. For the study of the minute quantities here dealt with this is a matter of considerable importance. That there is also greater freedom from systematic errors has been proved for some of the classes, and is probably true for all.

○

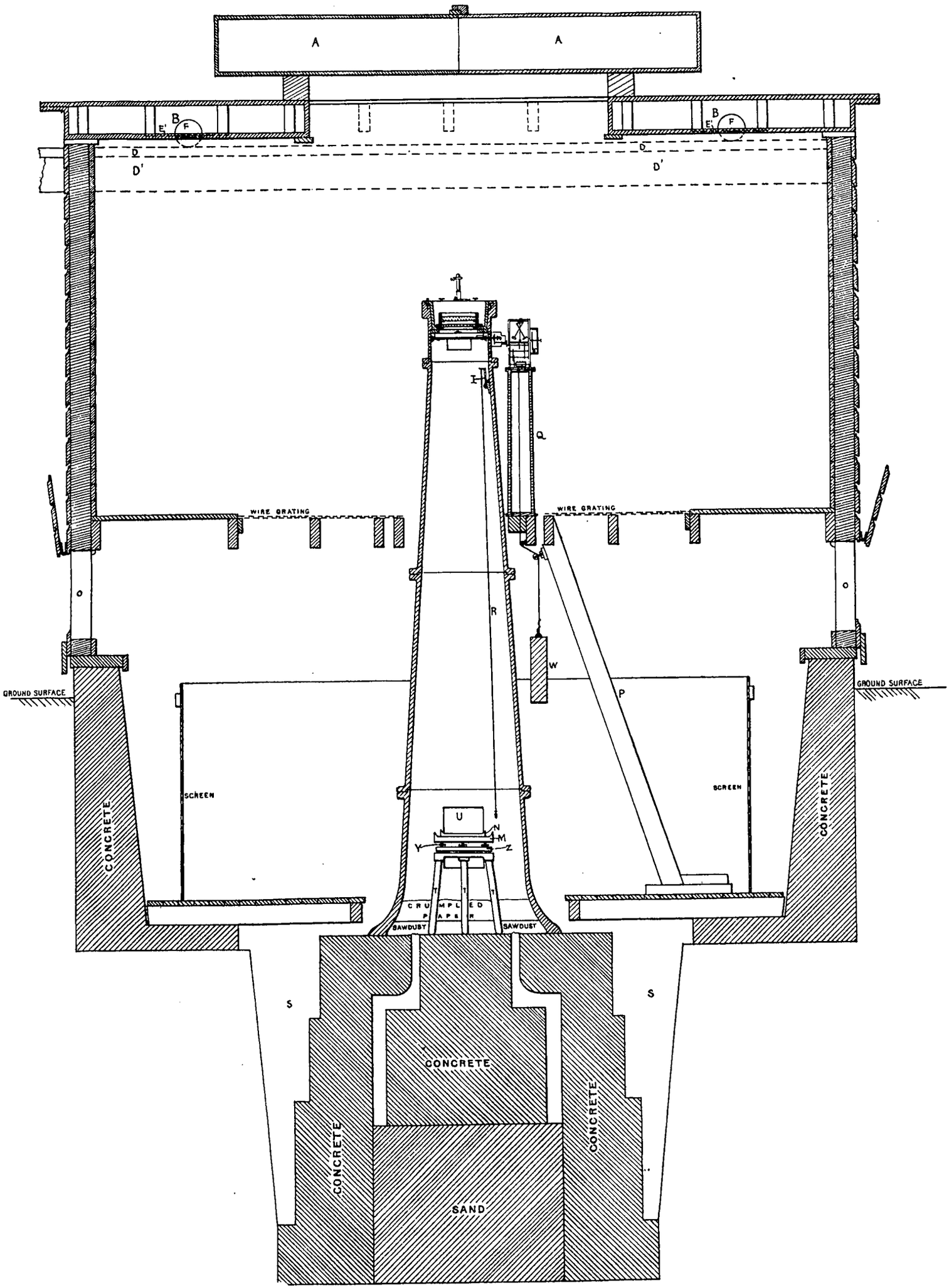

EAST-WEST SECTION OF ZENITH TUBE AND BUILDING.

(Scale: One-half inch equals one foot.)

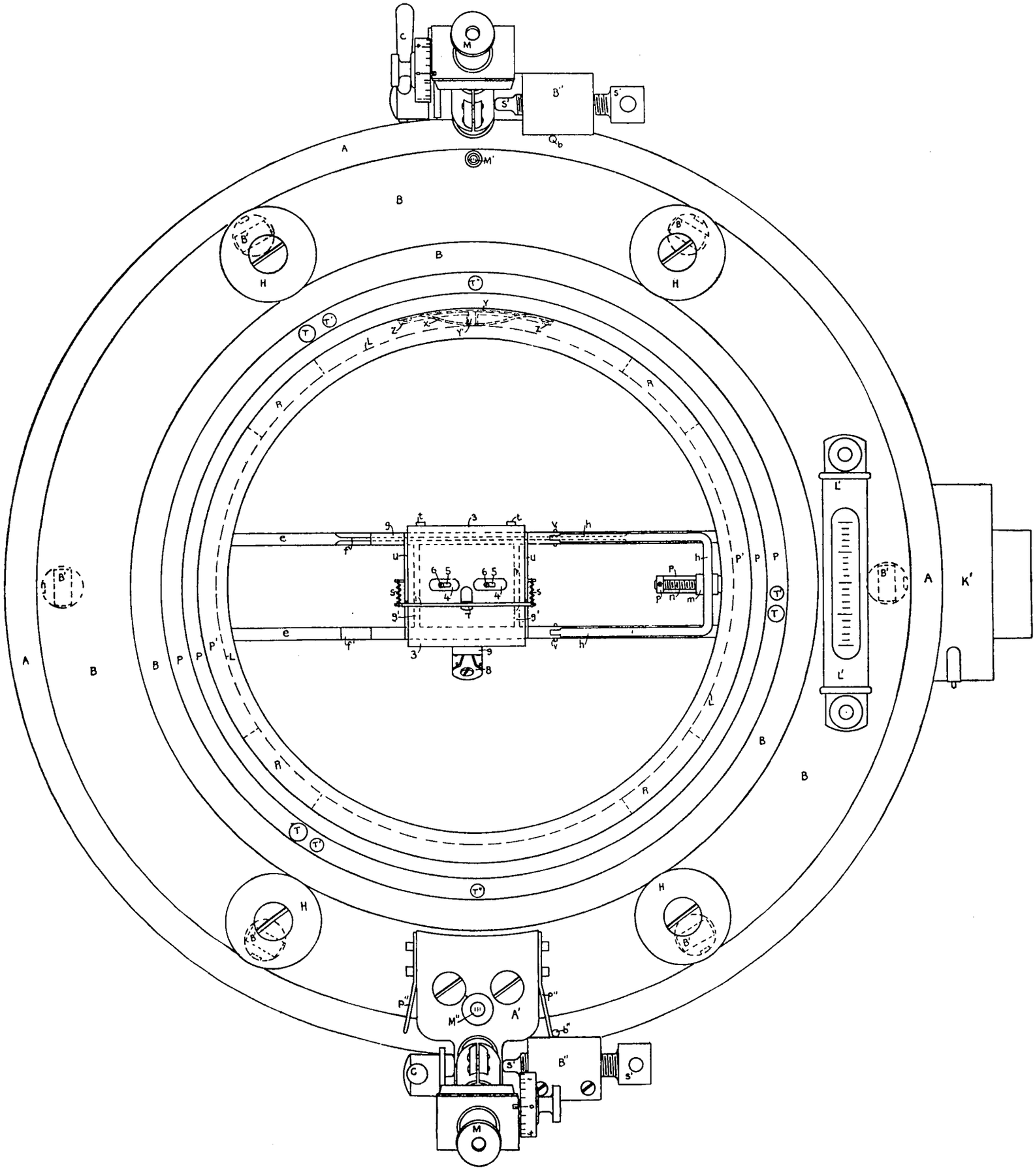

PLAN VIEW OF HEAD OF ZENITH TUBE.

(Half size.)

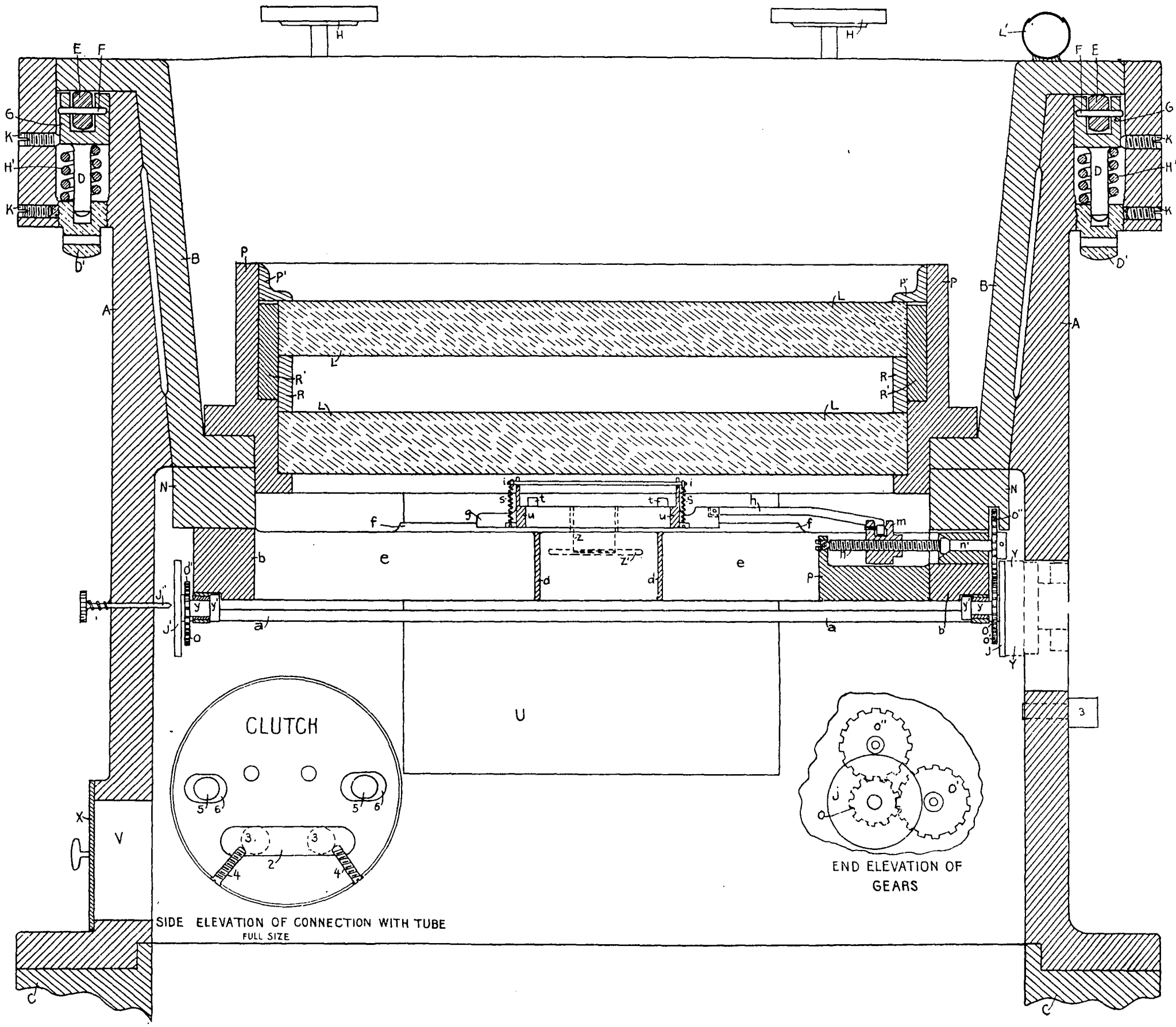

SECTIONAL VIEW OF HEAD OF ZENITH TUBE.

(Two-thirds size.)

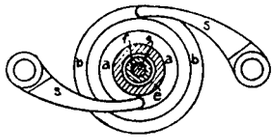

SECTION ON LINE A-B OF CLUTCH
HALF SIZE

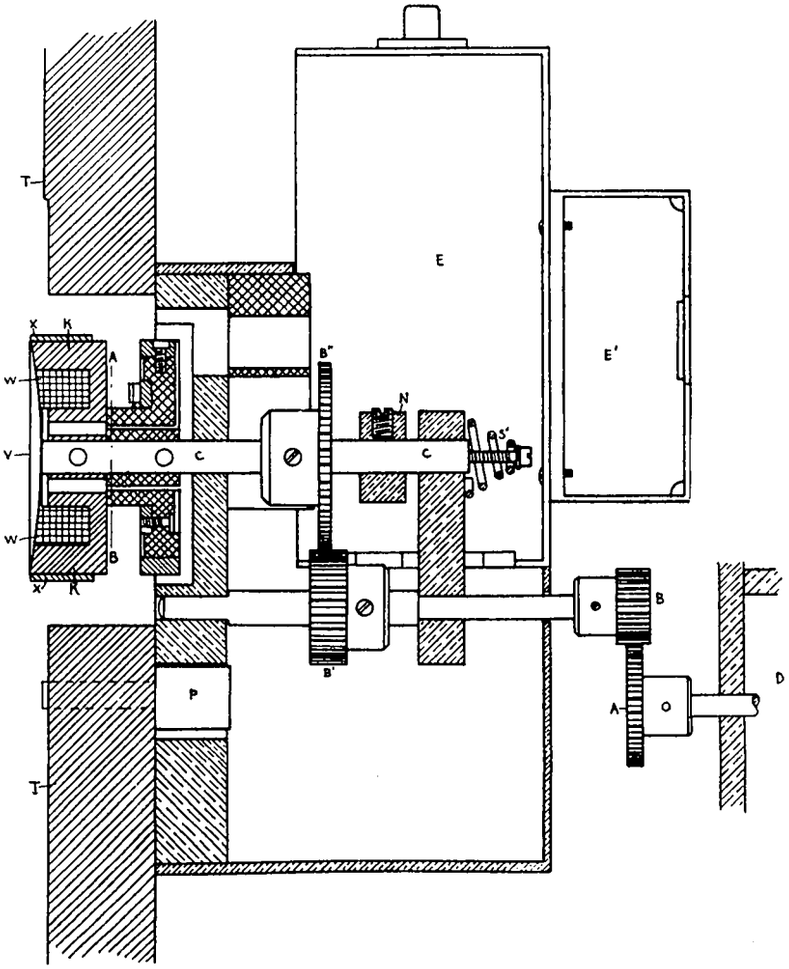

SECTION OF MAGNETIC CLUTCH.
(Full size.)

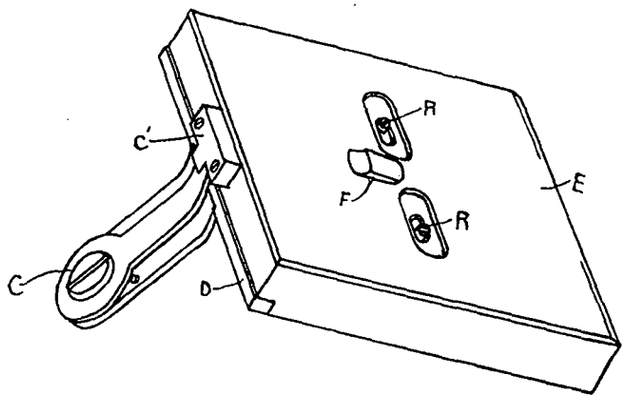

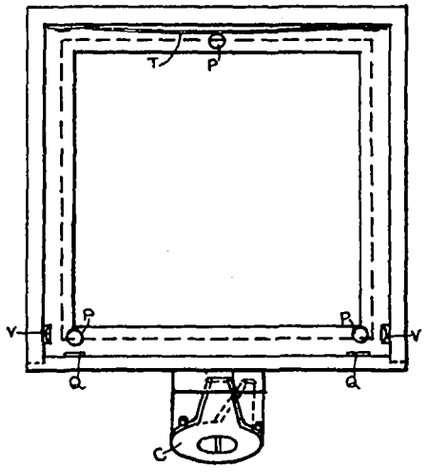

TOP VIEW WITH TOP REMOVED
FULL SIZE

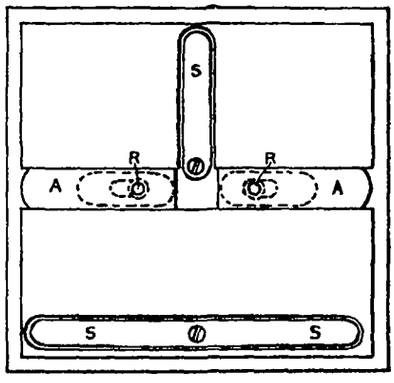

BOTTOM VIEW OF TOP
FULL SIZE

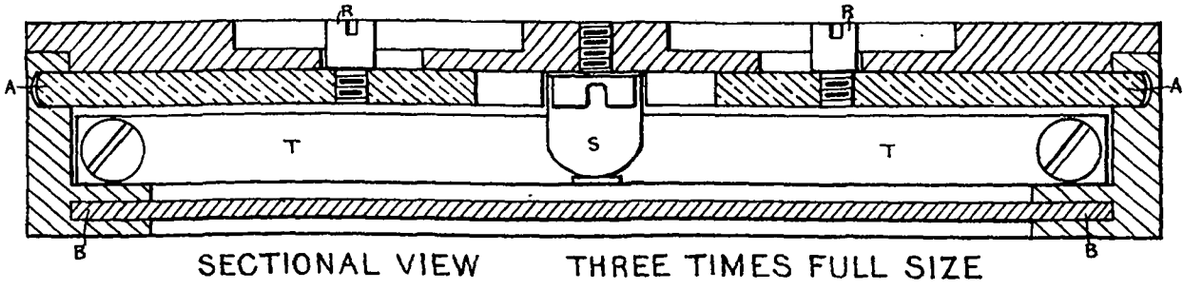

SECTIONAL VIEW THREE TIMES FULL SIZE

PLATE HOLDER.

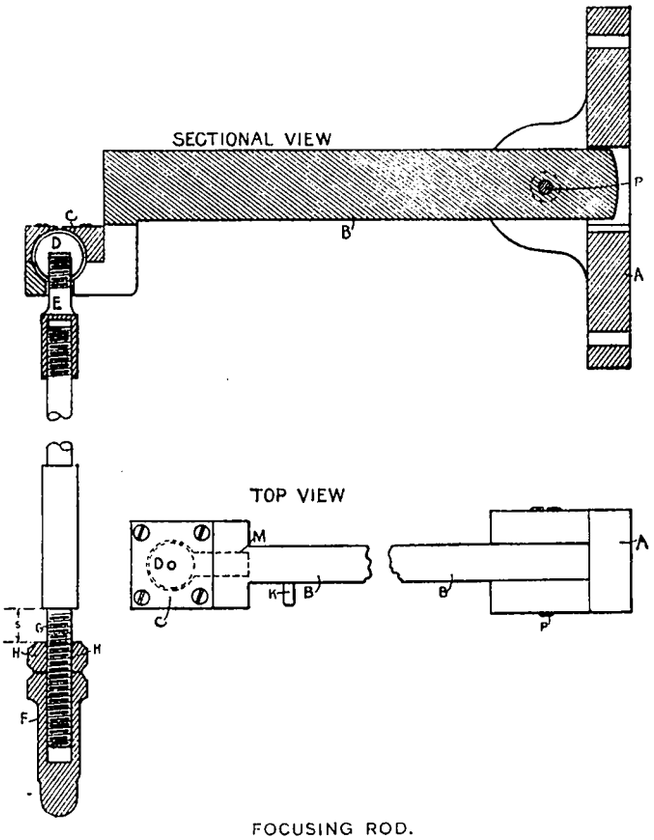

FOCUSING ROD.

(Half size.)

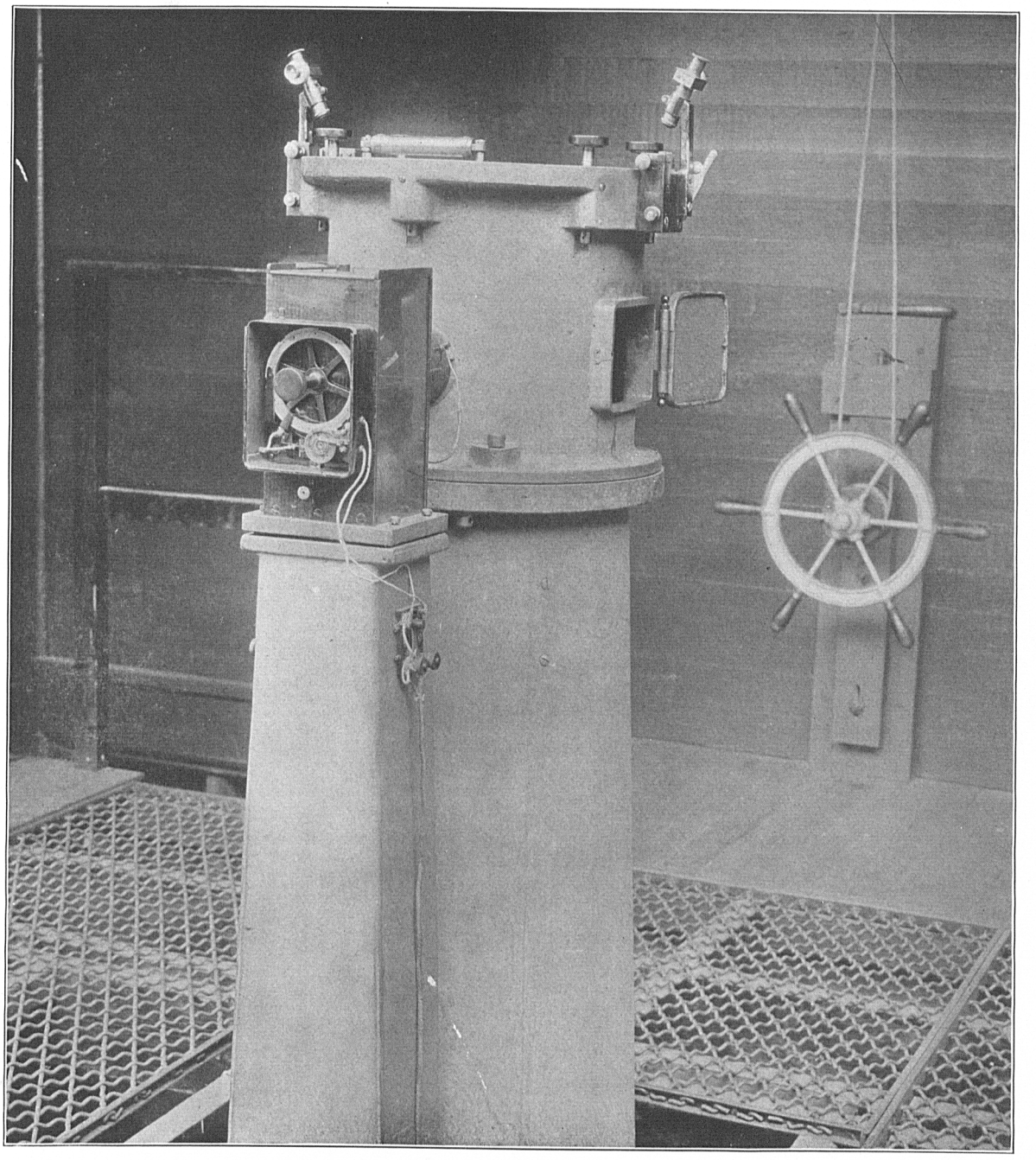

ZENITH TUBE, UPPER PART.

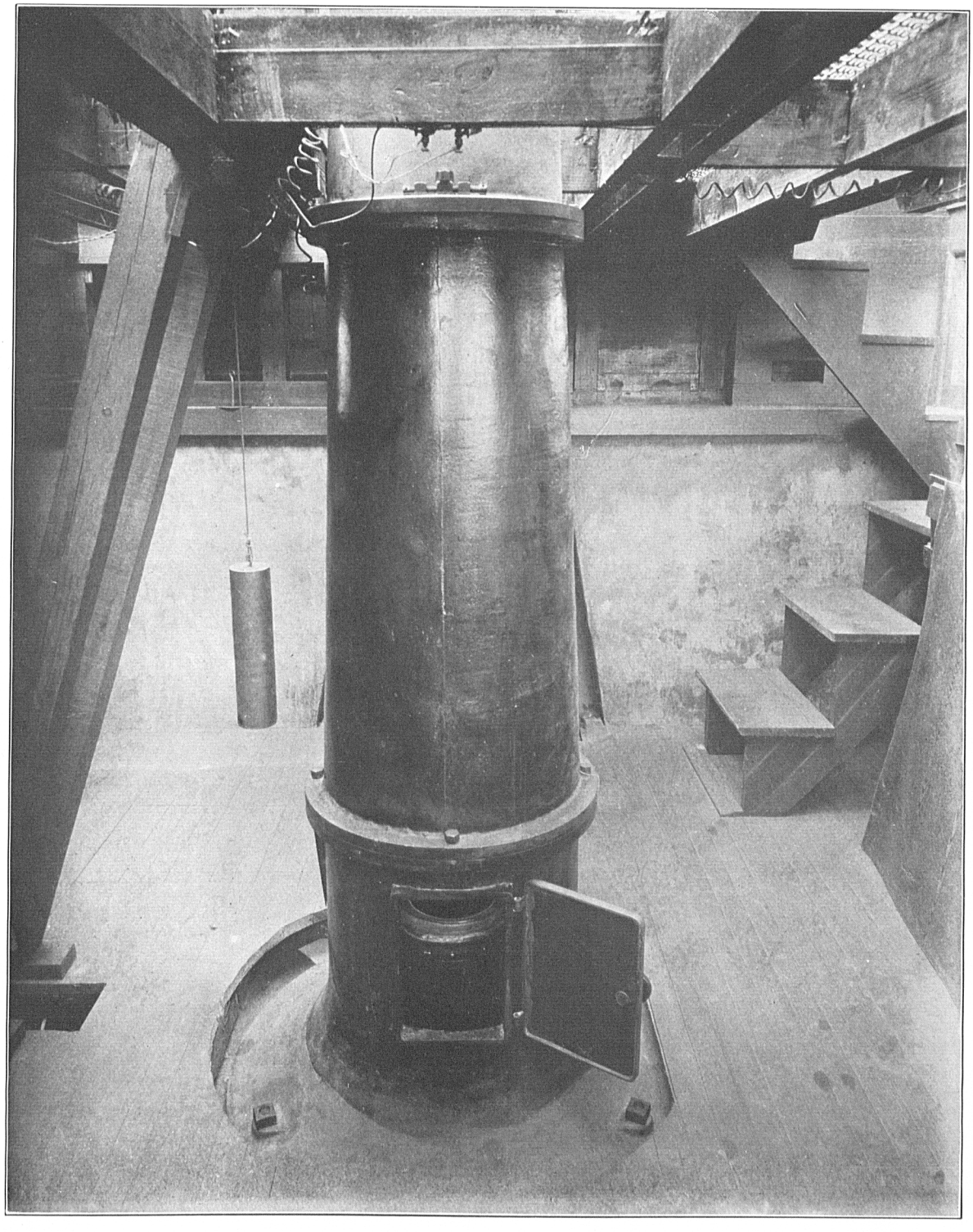

ZENITH TUBE, LOWER PART.

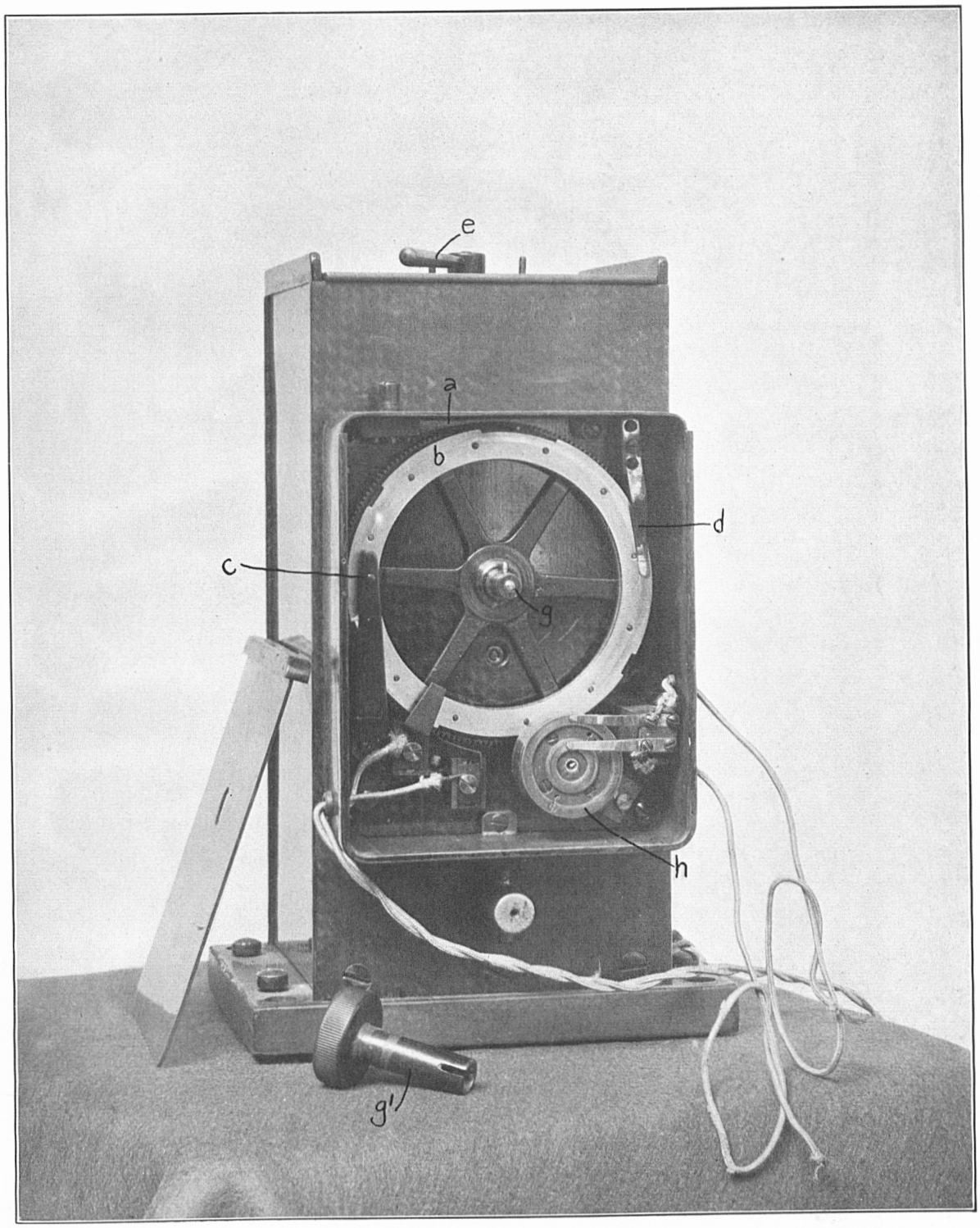

VIEW OF EXPOSURE CONTROL.

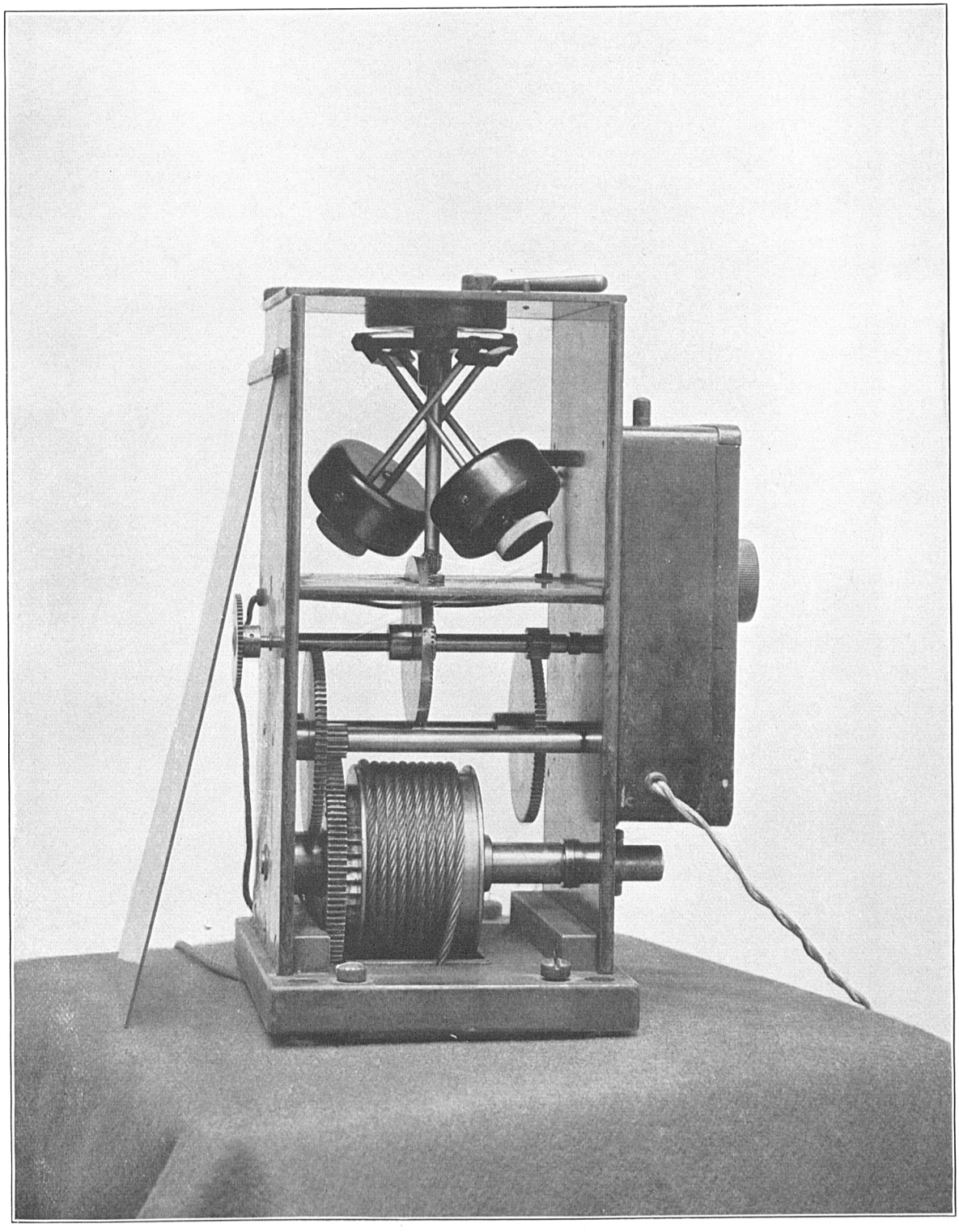

TUBE CLOCK.

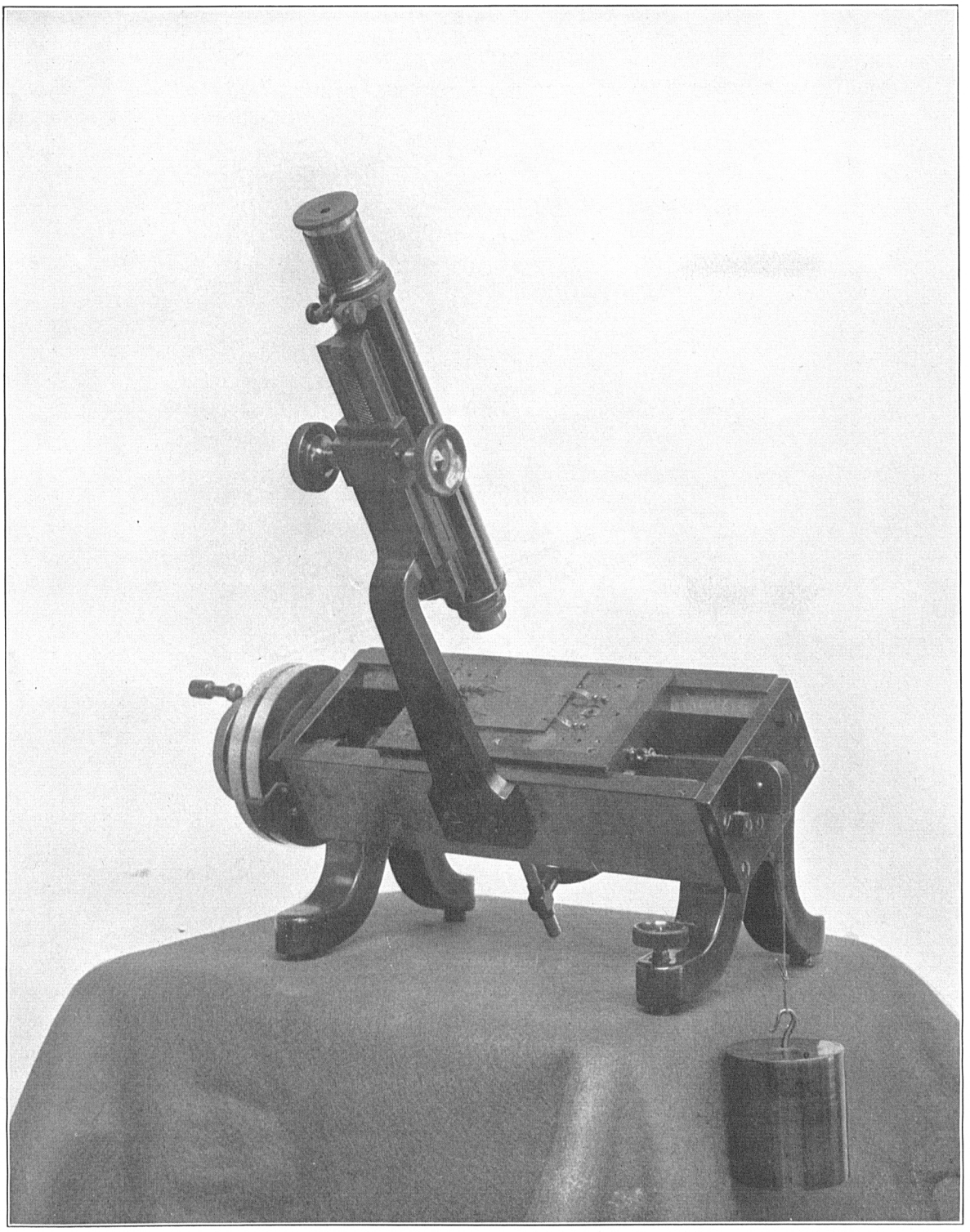

ELIZABETH THOMPSON COMPARATOR.

MERCURY BASIN AND STAND.

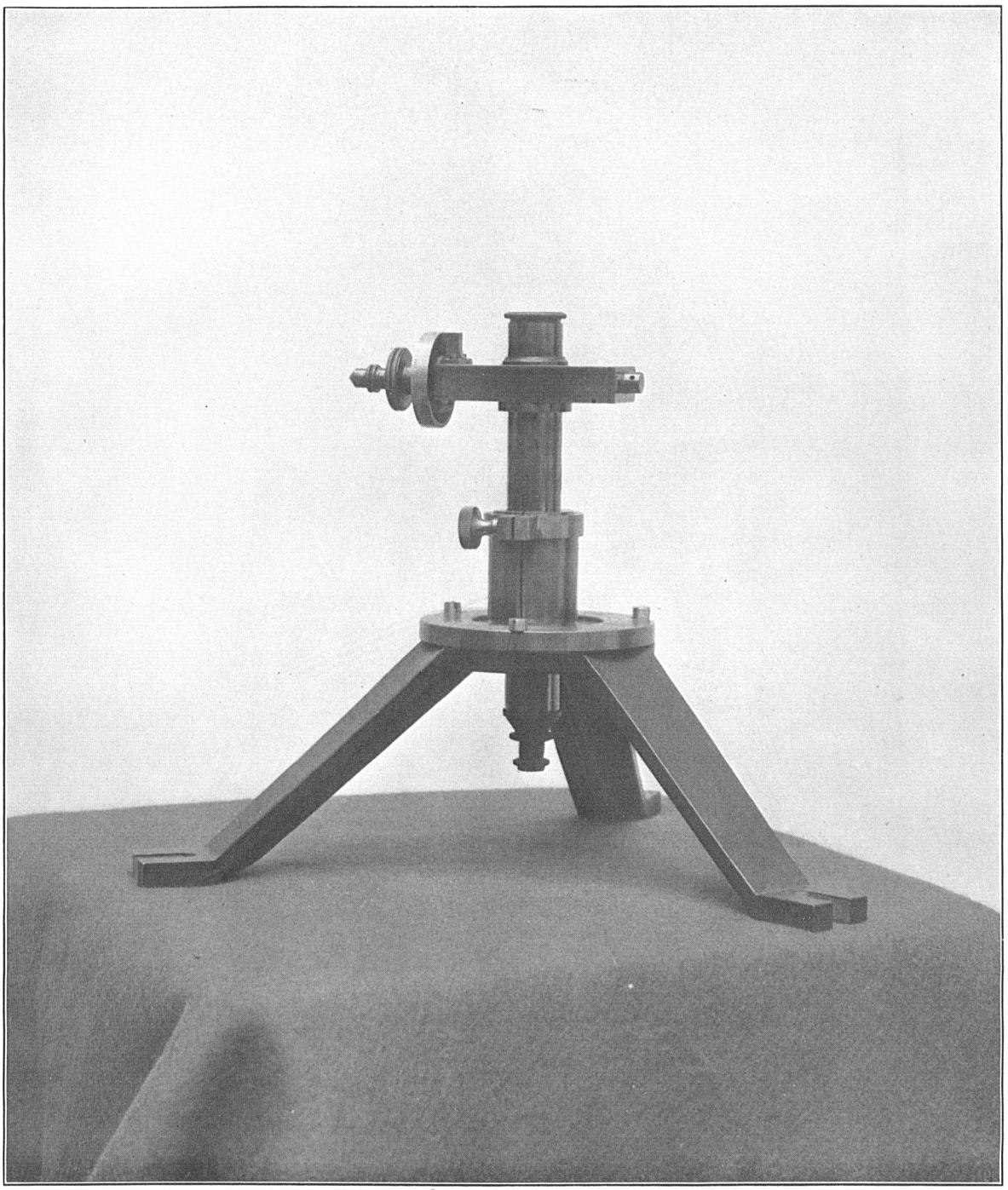

MICROMETER AND STAND FOR TESTING MOTION OF CARRIAGE.

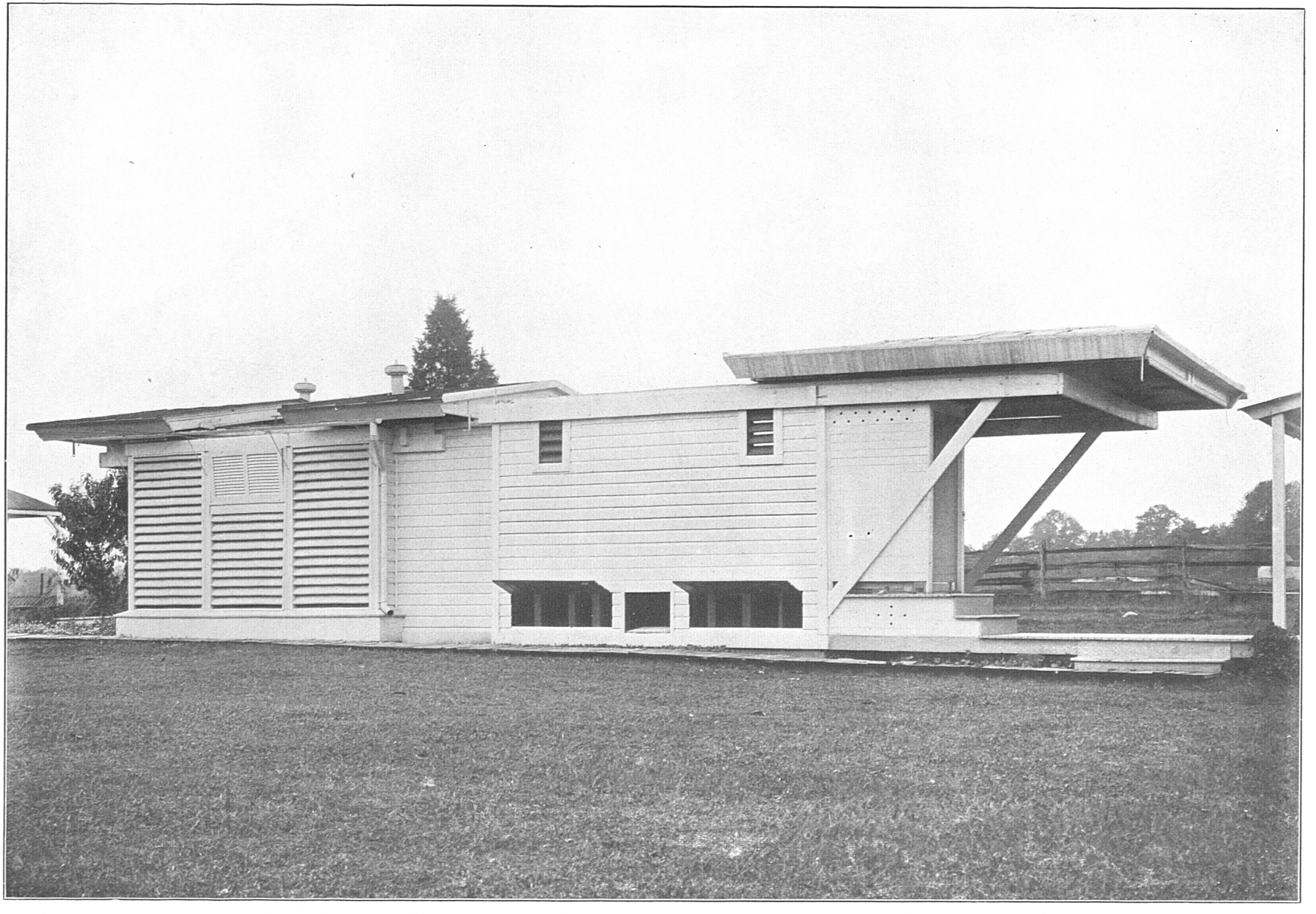

ZENITH TELESCOPE OBSERVATORY ON LEFT; ZENITH TUBE OBSERVATORY ON RIGHT, SHOWING ROOFS OPENED.

GENERAL VIEW OF GROUNDS AND BUILDINGS.

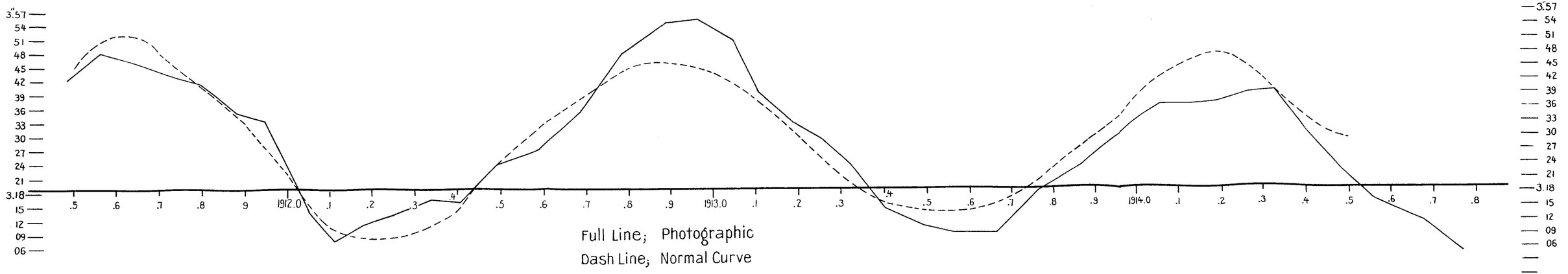

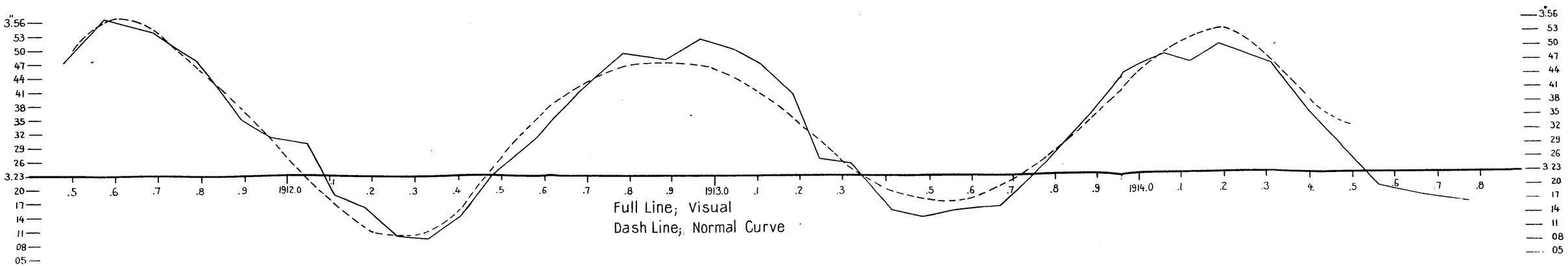

PHOTOGRAPHIC AND VISUAL LATITUDE VARIATIONS COMPARED WITH NORMAL CURVES.

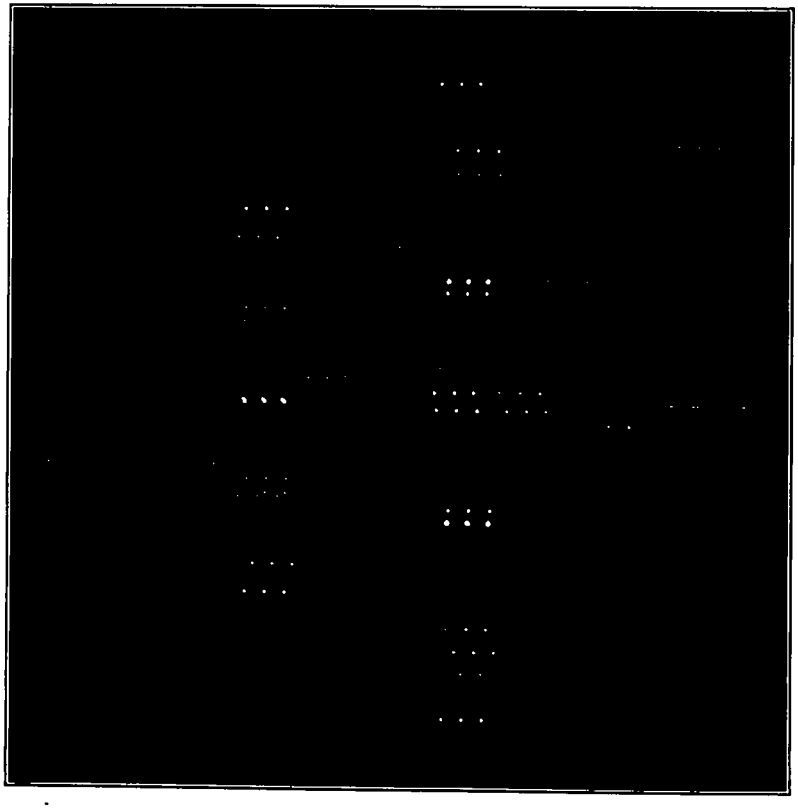

SPECIMEN PHOTOGRAPHIC PLATE GROUP 7, OCTOBER 23, 1914.

(Enlarged three diameters.)