Pub 4

2

100613
bm
20

Serial No. 238

DEPARTMENT OF COMMERCE

U. S. COAST AND GEODETIC SURVEY

E. LESTER JONES, DIRECTOR

INSTRUCTIONS FOR THE COMPENSATION OF THE MAGNETIC COMPASS

By

N. H. HECK

Chief, Division of Terrestrial Magnetism

With the cooperation of

W. E. PARKER

Chief, Division of Hydrography and Topography

LIBRARY
AUG 1 1 1992
N.O.A.A.
U.S. Dept. of Commerce

QB
275
.U35
no.96
(1923)

Special Publication No. 96

PRICE, 15 CENTS

Sold only by the Superintendent of Documents, Government Printing Office
Washington, D. C.

WASHINGTON
GOVERNMENT PRINTING OFFICE
1923

National Oceanic and Atmospheric Administration

ERRATA NOTICE

One or more conditions of the original document may affect the quality of the image, such as:

Discolored pages
Faded or light ink
Binding intrudes into the text

This has been a co-operative project between the NOAA Central Library and the Climate Database Modernization Program, National Climate Data Center (NCDC). To view the original document, please contact the NOAA Central Library in Silver Spring, MD at (301) 713-2607 x124 or www.reference@nodc.noaa.gov.

LASON
Imaging Contractor
12200 Kiln Court
Beltsville, MD 20704-1387
January 1, 2006

Blank page retained for pagination

CONTENTS.

	Paragraphs.
Introduction	1–11
Definitions	3–5
Binnacle and compass card	9–11

Part I.—COMPENSATION AND CARE OF THE COMPASS.

Steering a magnetic course and obtaining deviation	13–27
By observations on sun	15–18
By fixed object on land	19
By ranges	20–21
Swinging ship	22–27, 37
Compensation	30–73
Operations: Correct placing of fore-and-aft and athwartship magnet	31–34
Spheres	35–36
Heeling magnet	38–39
Flinders bar	40–47
Keeping the compass compensated	48–59
Sources of change in deviation	50–54
Continuous compensation	55–59
Special cases in compensation	61–73
Compensation with one compass only	61–62
Compensation for small craft	63–65
Compensation without known bearing or variation	66–70
Compensation by sun, using change of bearing only	71–73
Test of mechanical conditions of compass and azimuth circle	74–103
Spheres	75
Flinders bar	76
Magnetic moment	77–81
Sensitivity	82
Centering	83–84
Balancing	85–88
Steadiness	89
Removal of bubble and filling compass	90–94
Testing of azimuth circle	95–98
Correct placing of lubber line with regard to vessel	99–103

Part II.—EXPLANATION OF COMPASS DEVIATION AND COMPENSATION.

Introduction	104–105
Magnetic field and lines of force	106–115
Definitions	106–107, 109
Demonstration of magnetic field	108
Directions of lines of force	110–115
Induction	116–124
Induced magnets	116
Magnetic properties of iron	117
Effect of turning iron bar in a magnetic field	119–121
Resultant field	122
Curve of line of force	123–124
Earth's magnetic field	126–135
Magnetic elements	126–130
Short period changes in D	131–132
Long period changes in D	133
Local magnetic disturbance	134–135
The ship's magnetic field	137–168
Source of ship's magnetism	137–138
Subpermanent magnetism	140–143
Temporary magnetism	139
Complexity of ship's magnetism	144–146
Representation by equivalent magnets	147

The ship's magnetic field—Continued. Paragraphs.
Forces at compass center 148–155
Force diagram for subpermanent magnet 156–158
Force due to vertical equivalent temporary magnet 159–160
Force diagram for equivalent horizontal magnet 161–165
Deviation due to equivalent magnets as effected by heeling 166–168
Principles of compensation 169–201
Magnets alone 170–173
Joint compensation, by magnet and Flinders bar 174–178
Spheres 179–182
Heeling magnet 183–184
Reduction of directive force 185–189
Uncompensated deviation 190
Analysis of compass deviations 192–200

ILLUSTRATIONS.

Page.
1. Binnacle—U. S. Navy type—front view 2
2. Binnacle—side view 3
3. Compass card—(a) for standard compass 2
(b) for boat compass 3
4. Conversion of bearings—compass, magnetic, true 3
5. Sun bearing diagram 7
6. Binnacle details 10
7. Azimuth circle, U. S. Navy type 20
8. Diagram of field of bar magnet 25
9. Iron filing diagram—field of bar magnet 26
10. Iron filing diagram—soft iron bar making angle 0° with earth's field 27
11. Same—angle 30° 26
12. Same—angle 55° 27
13. Same—angle 90° 26
14. Diagram illustrating construction of lines of force 28
15. Elements of earth's magnetic field 29
16. Ship's magnetic field—equivalent magnets 33
17. Directions of forces with respect to ship 34
18. Force diagram—subpermanent magnetism 36
19. Force diagram—temporary magnetism 37
20. Heeling error diagrams 38
21. Action of spheres in compensation 41

TABLES.

Page.
1. Magnetic dip and horizontal intensity for 1923—coast of North America from Maine to Alaska 48
2. Period of oscillations for magnetic moment test of compass 49

INSTRUCTIONS FOR THE COMPENSATION OF THE MAGNETIC COMPASS.

INTRODUCTION.

1. **The place of the magnetic compass in navigation.**—The magnetic compass has been the mainstay of navigators for centuries. The increased use of iron and steel in the construction of vessels developed difficulties in the use of the compass which at first appeared insuperable, but the problems have all been solved. In most vessels a properly placed magnetic compass will give satisfaction if the navigator uses the same care in its use as he does in his astronomical work. In spite of the development of the gyrocompass, the magnetic compass still holds the field and is likely to continue to do so for the majority of vessels, especially those of smaller types.

2. The fact that the compass needle does not point to true north, and that its departure from true north varies with locality and also at different times at the same place, no longer gives serious trouble. Magnetic surveys have been extended over the major part of the frequented waters and on the adjacent lands, and fixed magnetic observatories assist in keeping records of changes, so that correct magnetic information now appears on nearly all mariners' charts. Magnetic surveys of the United States and its adjacent waters have been made by the Coast and Geodetic Survey. These have been supplemented by the work of the Carnegie Institution of Washington, whose nonmagnetic vessel, the *Carnegie*, has made accurate observations on all oceans.

3. **Magnetic north and variation.**—Magnetic north is the direction taken by the needle of a compass free from mechanical defects, and which is acted on by the earth's magnetic field alone. Variation is the angle between magnetic and true north measured either east or west from true north.

The earth's magnetism is so distributed that the variation does not change uniformly from place to place. Fortunately for the navigator this change is more uniform over the water than it is over the land. In a few localities the variation along the shore and over adjacent water areas is very different from the normal for the region and changes very rapidly. In most localities, however, the variation can be considered constant for a limited area, such as a harbor or roadstead. In proceeding from place to place change of variation should always be taken into account in navigation.

4. **Deviation.**—On a vessel free from magnetic material the compass points to magnetic north no matter what direction the vessel is heading. Practically all vessels have an appreciable amount of iron or steel in their construction and the ship's magnetism, as well as that of the earth, acts upon the compass, causing it to point to one side or the other of magnetic north, depending on the heading of the vessel. The amount by which the compass needle points east or

west of magnetic north is called deviation. On vessels constructed almost entirely of iron or steel deviations would be so large as to be unmanageable if a means were not provided to make them smaller.

Not only does deviation change with the heading of the vessel, but it is different when, for any reason, the vessel is not on even keel.

5. Compensation.—Compensation of the compass is the process of counteracting the effect of the ship's magnetism so that deviations will be small. It is based on the general principle that the effect of iron and steel of the ship, acting at various distances, can be balanced by magnets and soft iron placed close to the compass. The principles underlying compass compensation will be explained in detail in Part II. They are not mysterious nor particularly difficult to understand, but they require study. A knowledge of the principles involved is not essential for practical compensation, which can be carried through in a satisfactory manner by using Part I alone.

6. Purpose of publication.—This publication has been prepared especially for the use of the Coast and Geodetic Survey as a guide to its officers in keeping the compass adjusted sufficiently to meet the demands of hydrographic and magnetic surveys and to give them some understanding of the underlying principles, so that this result can be most effectively accomplished. Other navigators, however, will find it useful, as modern requirements in navigation are practically as rigid as in surveying.

7. References.—A few of the numerous publications on the subject of the magnetic compass which have been issued during the 70 years that the subject of compensation has been understood will be mentioned as having been of special use in the preparation of this publication:

Muir's Navigation and Compass Deviations, 1906.
British Admiralty Manual of the Compass (various editions).
British Admiralty Manual of Navigation, 1922.
Practical Manual of the Compass, U. S. Naval Institute, 1913.
J. J. Thomson's Elements of Electricity and Magnetism, 1909.

8. Acknowledgment is made here of the help received from various members of the Coast and Geodetic Survey. Numerous officers with experience in command or as navigators of survey vessels have made valuable suggestions and constructive criticisms. Special mention is made of the contributions of Commander J. T. Watkins, U. S. Coast and Geodetic Survey, who prepared much of the discussion on the testing of compasses; Lieut. A. L. Giacomini, U. S. Coast and Geodetic Survey, assistant chief, division of charts, and D. L. Hazard, mathematician, assistant chief, division of terrestrial magnetism.

9. The binnacle.—Many different types of binnacles have been made. The requirements for a binnacle which permits complete and accurate compensation of the compass include:

(1) Holders or trays for fore-and-aft magnets, directly below compass, which permit the magnets to be brought to the desired position with regard to the compass and held there.

(2) Holders or trays which permit the magnets to be placed in an athwartship direction, symmetrically with regard to a vertical athwartship plane through the compass, and to be held at the desired distance from the compass.

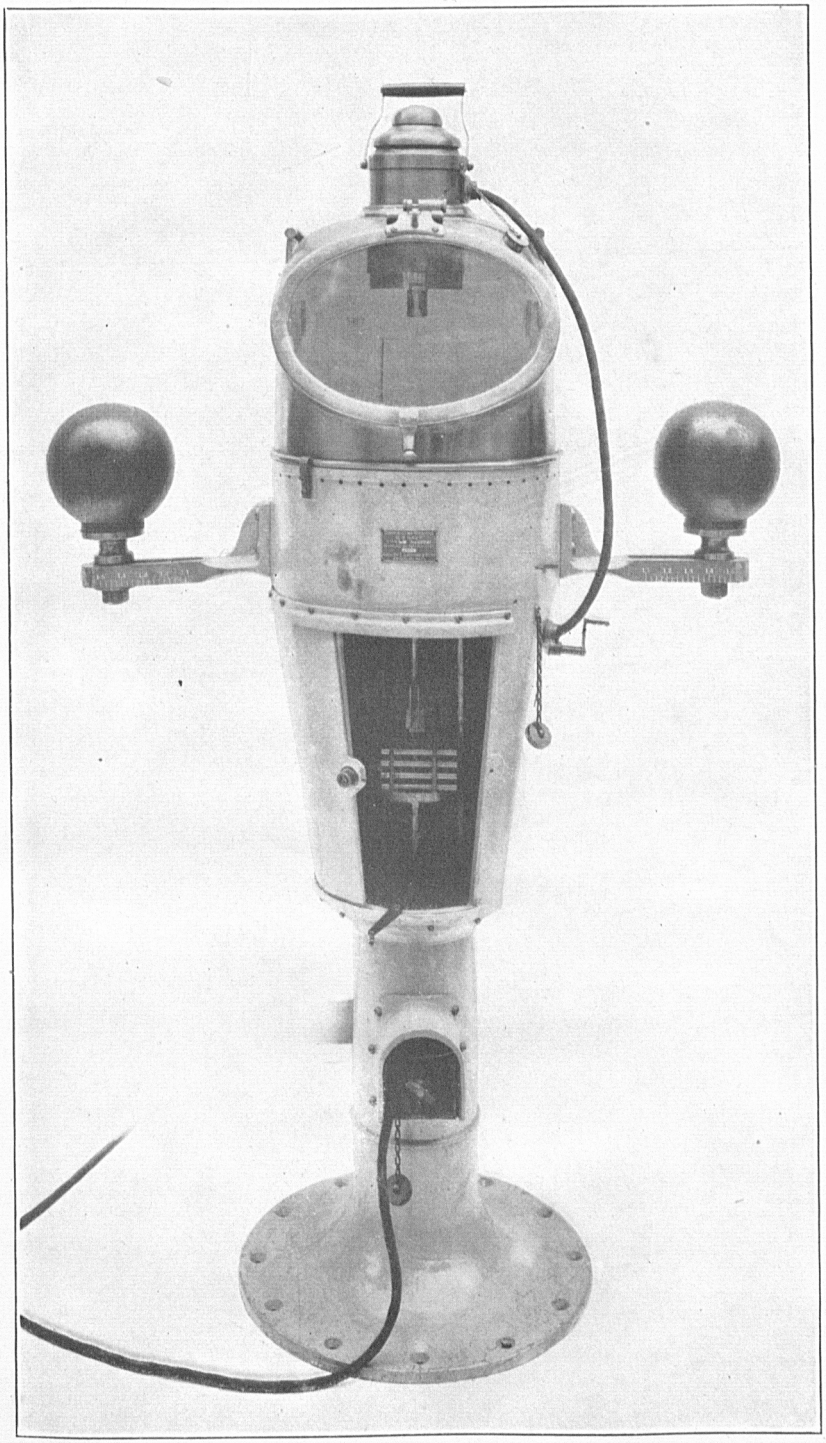

FIG. 1.—BINNACLE, U. S. NAVY TYPE—FRONT VIEW.

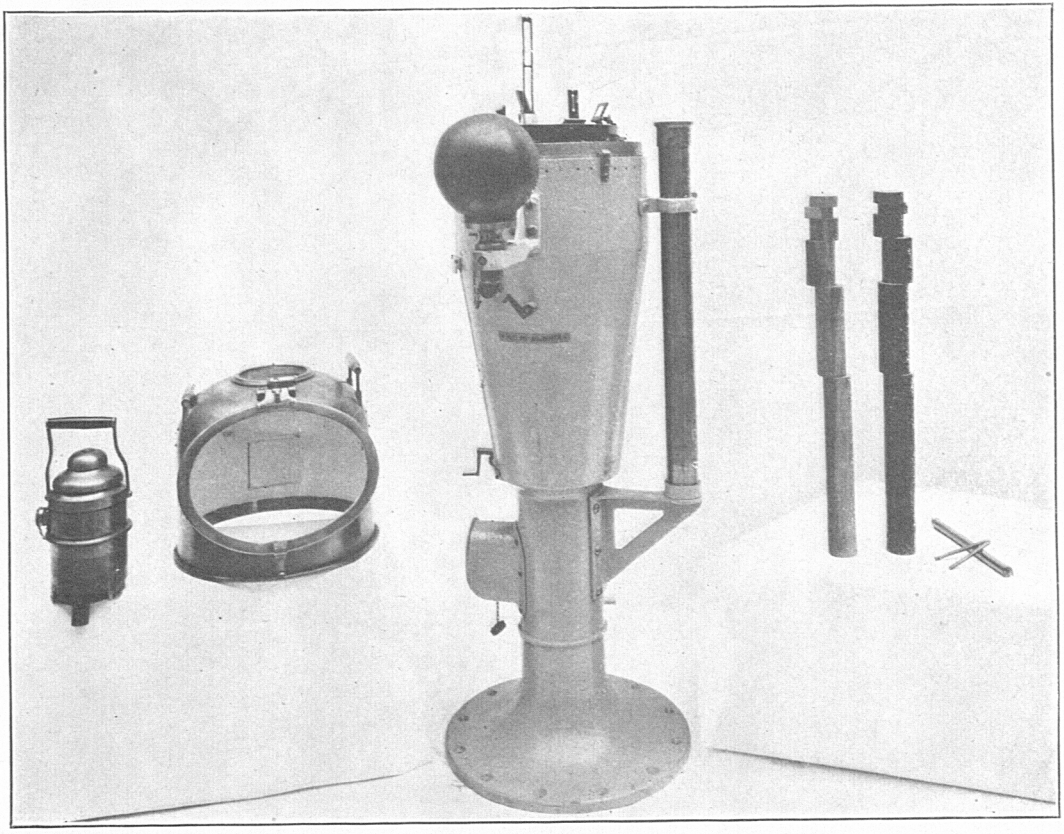

FIG. 2.—BINNACLE, U. S. NAVY TYPE—SIDE VIEW WITH FLINDERS BAR REMOVED.

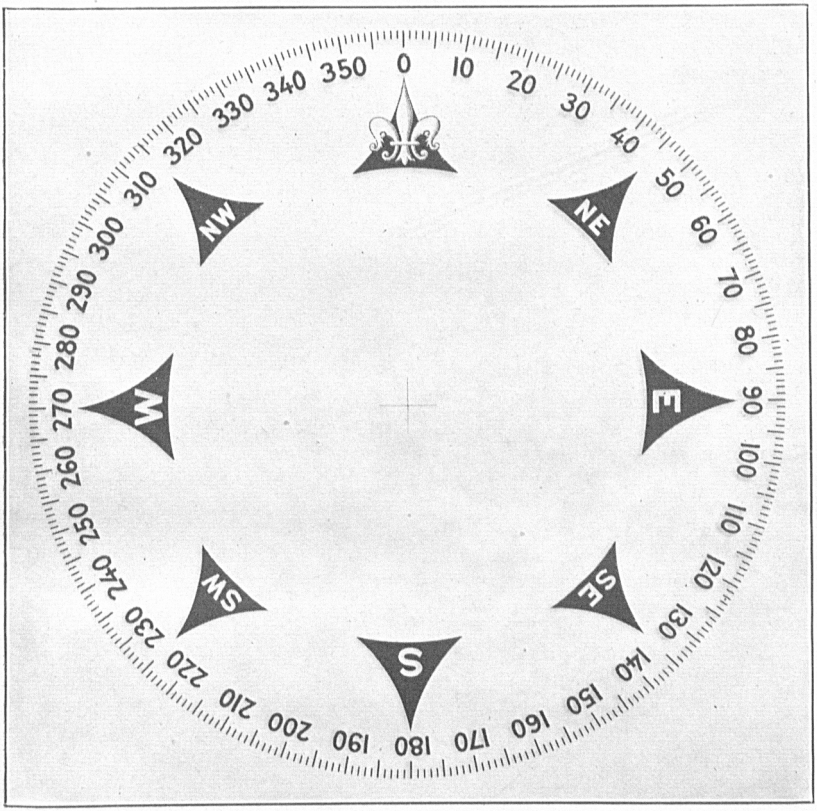

FIG. 3a.—7½-INCH COMPASS CARD—U. S. NAVY STANDARD TYPE.

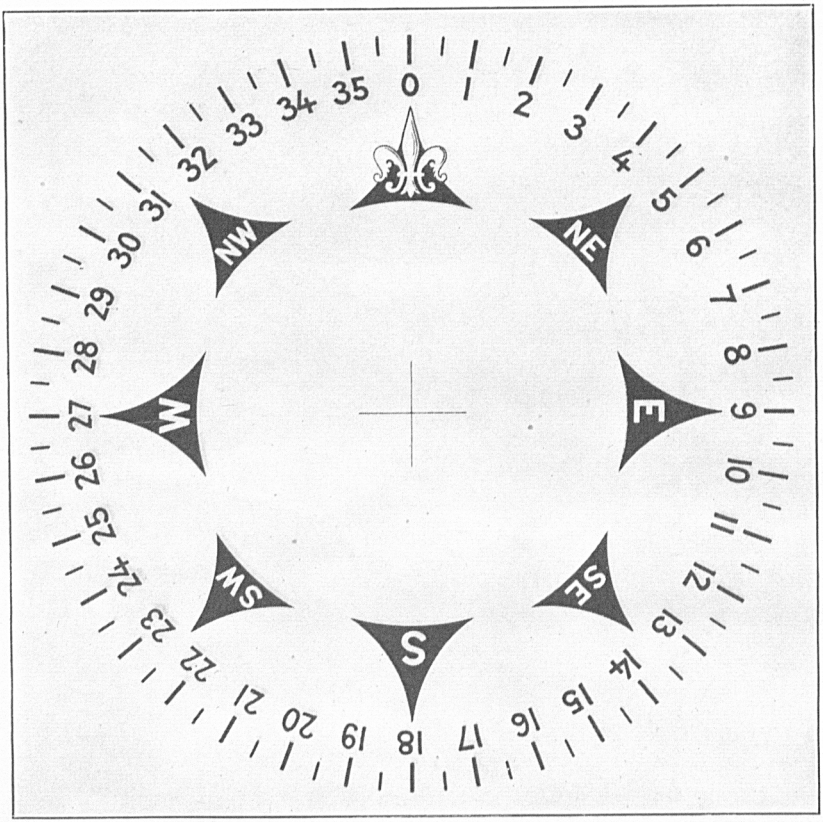

FIG. 3*b*.—4-INCH COMPASS CARD—U. S. NAVY STANDARD TYPE FOR BOATS.

(3) Hollow iron spheres mounted on each side of the binnacle so that their distances from the compass may be varied.

(4) A vertical holder directly under the compass pivot, which will permit the vertical heeling magnet to be placed at any desired distance below the compass.

(5) A holder for the Flinders bar.

(6) It is very desirable that there should be graduations on the first three named holders so that the effect of change of position can be readily obtained.

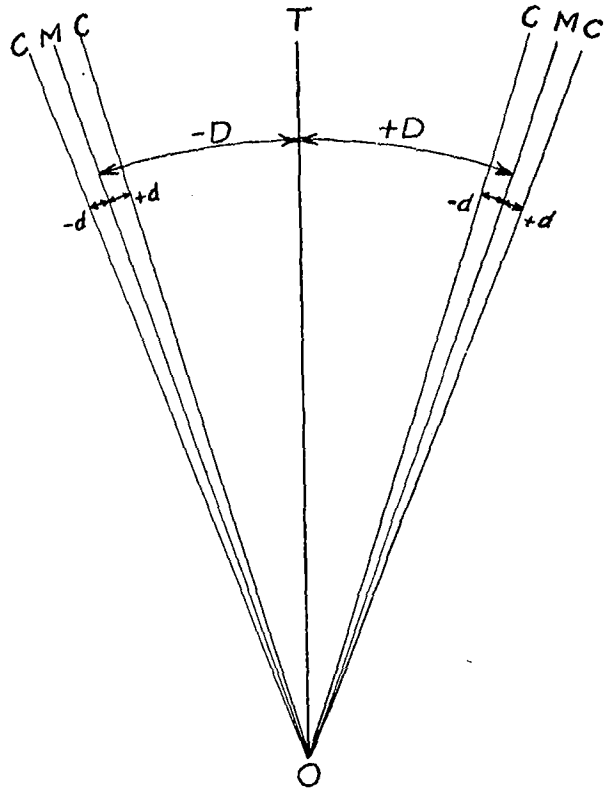

FIG. 4.—Conversion of bearings—compass, magnetic, true.

The U. S. Navy type binnacle shown in Figures 1 and 2 is an excellent type of binnacle involving all these features.

10. Compass card.—Many forms of compass cards are in use, most of them still showing the influence of the days when the point was the most important subdivision. With the degree coming into universal use as a designated steering point, the advantages of the standard Navy compass card are so great that it is recommended for general use. It is seen from Figure 3 that it is graduated from 0° at north to the right through 360°. Every bearing or course is designated by a single number, as for example, 105°. It is easy to

convert bearings or courses with this card. The rules which apply to both variation and deviation, calling east plus, and west minus, are:

11. Rule for correcting bearings.—To change from compass to magnetic bearing, or from magnetic to true, add or subtract deviation or variation according to sign.

To change from true to magnetic bearing, or magnetic to compass, reverse signs of the variation or deviation and apply according to the changed sign.

A simple form of these rules which will aid in remembering them is: Always think of compass—magnetic—true, or true—magnetic—compass. If the words have the order of the alphabet, apply signs directly. If the reverse order, reverse signs before applying. (See Figure 4.)

Part I.—COMPENSATION AND CARE OF THE COMPASS.

Schedule covering chief details of compensation.

	Paragraphs.
1. Test compass for magnetic moment and sensitivity	77–84
2. Test azimuth circle	95–98
3. Compensation by standard methods:	
Prepare table of sun bearings in order to steer magnetic course	15–17
Fore-and-aft and athwartship magnets and spheres	30–36
Heeling error compensation	38–39, 184
Placing Flinders bar	40–47
4. Swing ship, and compute deviation	22–27, 37
Occasional tests:	
Spheres	75
Flinders bar	76

12. Requisites for proper use of the magnetic compass.—There are certain fundamental things that a navigator must know how to do in order to have a compass satisfactory for use in surveying and navigation.

(*a*) He must know how to find out whether his compass, binnacle, and azimuth circle or pelorus are in satisfactory condition.

(*b*) He must know how to steer a magnetic course and how to obtain the deviation of the compass on any heading.

(*c*) He must know how to make the compensation.

(*d*) He must know how to keep the compass compensated.

Testing of compass and azimuth circle.—The uselessness of undertaking compensation without knowing whether the compass is capable of compensation should be clearly recognized. The customary tests, with the explanation of most of the likely defects of a compass, are discussed in paragraphs 75 to 90.

STEERING A MAGNETIC COURSE AND OBTAINING DEVIATION.

13. Steering a magnetic course.—In order to compensate the compass it is necessary to hold the vessel on certain magnetic courses while the compensation is going on. Most vessels are provided with at least two compasses so that one can be used to steer by while the other is being compensated.

In order to steer a magnetic course or to obtain the deviation the magnetic bearing of some object, whether astronomical, as the sun, or some land object, must be known. In the former case the bearing of the astronomical object is constantly changing, but is not affected by a change of position of the vessel. In the latter case, unless the shore object is directly ahead or astern, its bearing is constantly changing with the position of the vessel; the more distant the object the less rapid the change.

Express the magnetic bearing of the selected object in degrees measured to the right from north through 360°. Express the desired magnetic course in the same manner. Take the difference. If the bearing of the object is the greater, set the pelorus or azimuth circle to the right of the lubber line by the amount of the difference.

If the bearing of the object is the smaller, make the setting to the left. Swing the ship until the object is sighted on and note the course by the steering compass.

14. In order to compensate the compass it is necessary to head on a given magnetic course. In order to find the amount of the deviation this is not necessary. It is simply necessary to know the magnetic bearing of some object. The difference between the compass bearing and the magnetic bearing is the deviation.

The sun is the most used astronomical object for compass work. Its magnetic bearing at any time can be obtained in the following manner.

15. Magnetic bearing of sun at any time.—Azimuth tables published by the U. S. Hydrographic Office give the true bearing of the sun at intervals of 10 minutes for each full degree of latitude and declination of the sun. The variation at any place can be obtained from the navigational charts or from one of the various magnetic charts showing the lines of equal variation. From these two quantities the magnetic bearing of the sun at any time and place can be obtained.

16. As the sun's bearing is constantly changing, it is necessary to prepare in advance a table, or preferably a diagram, covering the period of the proposed observations, from which the bearing at the moment of observation may be readily obtained. The published azimuth tables give the true bearing of the sun, east of north for the morning and west of north for the afternoon. For the method adopted in this publication these tabular quantities must be subtracted from 360° in preparing a table for afternoon observations. The following example will make clear the method of preparing such a table. By setting the watch to apparent time the table can be used directly.

17. Preparation of table of sun's bearing.—A table is required for interval 7.40 to 9 a. m., local apparent time, latitude 41°.3 N., declination 9°.7 N. (declination therefore same name as latitude).

First copy from table the bearings for the desired interval for the nearest full degree *below* (*numercially*). Then by interpolation find the bearings for the beginning and end of the interval for the given latitude and declination as follows:

Time a. m.	Latitude, 41°; declination, 9°.	Latitude, 41°.3; declination, 9.7.	Difference.	Desired bearing.	Difference per minute.
h. m.	° ′	° ′	′	° ′	′
7 40	99 52	99 25	−27	99 25	.....
50	101 40	.....	−27	101 13	10.8
8 00	103 32	.....	−26	103 06	11.3
10	105 27	.....	−26	105 01	11.5
20	107 24	.....	−25	106 59	11.8
30	109 26	.....	−25	109 01	12.2
40	111 32	.....	−24	111 08	12.7
50	113 43	.....	−24	113 19	13.1
9 00	115 58	115 35	−23	115 35	13.6

For time 7.40, latitude 41° the difference between the tabular quantities for 9° and 10° declination is − 50′ or 5′.0 for one-tenth of a degree. Then the correction for 0°.7 is − 35′ and the bearing for 9°.7 is 99° 17′. By the same method for latitude 42°, declination

9°.7, the bearing is 99° 44′. The bearing for latitude 41°.3 is then 99° 17′ + (0.3 × 27′) = 99° 25′.

Using similar methods, the 9 a. m. bearing is found to be 115° 35′. Next enter difference between these bearings and the corresponding ones in column 2. Then space evenly the intermediate differences. By applying these corrections we then arrive at column 5, the desired bearing.

18. Curve of sun's magnetic bearing (see figure 5).—A series of points are then plotted on cross-section paper, with the horizontal lines representing time and the vertical lines true bearings. Draw a line or smooth curve connecting these points. Then draw a parallel

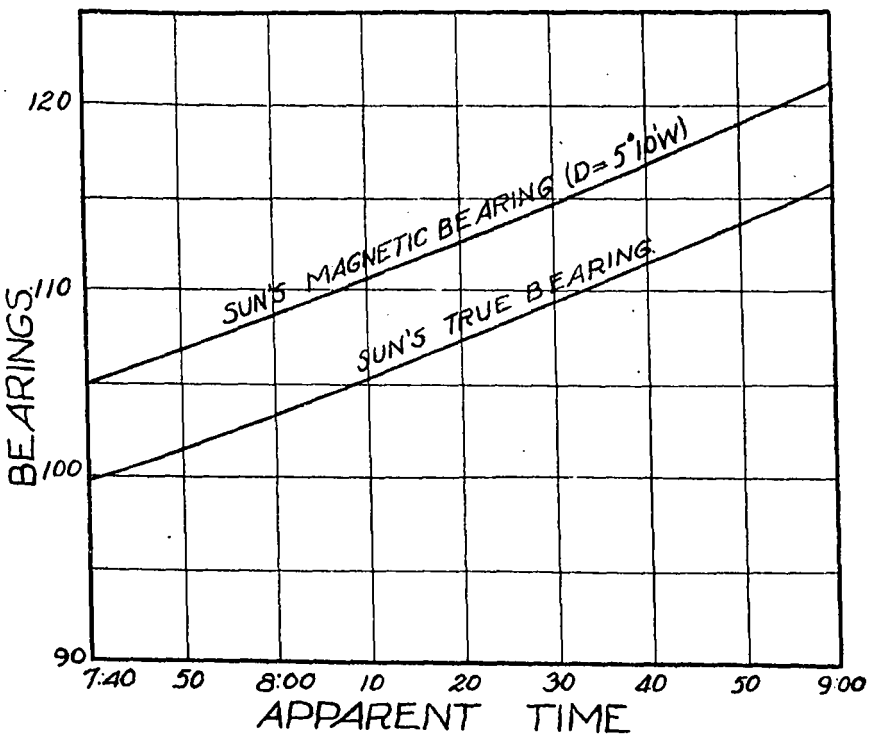

FIG. 5.—Diagram of sun's bearings.

line or curve so that the vertical distance between them represents the variation. This line is drawn above the other if variation is minus, below if plus. The magnetic bearing for any minute can then be read directly. The same result can be obtained by computation, using the difference per minute in column 6 to obtain the correction to the next previous tabular bearing and then applying the magnetic variation. The graphic method is worth the time required to prepare it.

In obtaining the deviation for any desired compass course, the vessel is steered on that course and the bearing of the sun is obtained. In this case the computation of the sun's bearing may be postponed

till after the observations, though a table prepared in advance is well worth while.

19. Use of shore objects.—A distant land object may be used instead of the sun if its bearing can be obtained from the chart and if its distance is so great that its bearing does not change appreciably over the area covered by the ship during compensation. The same bearing is used throughout. This method can be used with a distant peak not less than 20 miles away. The following method is especially applicable to survey vessels, but is also suitable for coastwise vessels. The position of the ship is obtained by the three-point fix method much used in coastwise navigation. As nearly as possible at the same time a compass bearing is taken of a shore object and sextant angles are measured between fixed objects on land or such objects as buoys on the water. The shore objects may be either well-defined objects that can be identified on the chart or well-defined tangents to islands or projecting points. The position is plotted on the chart and the magnetic bearing of the object whose compass bearing was observed is obtained. If the vessel is moving fast, allowance should be made for time elapsing between taking of position and of compass bearing. The method can be used only in a region where the charts are based on accurate surveys.

Magnetic declination on course from observations on shore objects.

[Steamer, *Lydonia*; date, June 8, 1922; observers, R. F. Luce, (R) R. P. Eyman, (L) E. F. Lewis; latitude, 43° 21′; longitude, 124° 26′; weather, clear; wind, light; sea, smooth.]

No. pos.	Time, 120 mer. p. m.	Angles.	Ship's head.	Mark and compass bearing.	Deviation.	Magnetic bearing of mark.	True bearing of mark.	Declination.
		° ′	°	° ′	° ′	° ′	° ′	° ′
		Out..... 76 49	.....	Out.....	.....	.....	.....	East.
	h. m.	Arago.						
60	2 02	Clump..... 51 02	243	161 50	+2 10	164 00	185 31	21 31
		Out..... 79 07						
		Arago.						
61	2 06	Clump..... 46 27	246	161 00	+2 01	163 01	184 31	21 30
		Out..... 80 00						
		Arago.						
62	2 10	Clump..... 43 09	244	159 30	+2 07	161 37	183 31	21 54
		Out..... 80 41						
		Arago.						
64	2 21	Clump..... 38 26	248	157 40	+1 55	159 35	181 25	21 50
		Out..... 80 47						
		Arago.						
65	2 25	Clump..... 36 03	246	157 00	+2 01	159 01	180 15	21 14
		Out..... 80 23						
		Arago.						
66	2 30	Clump..... 34 21	248	155 50	+1 55	157 45	179 05	21 20
Mean.....		.....	.....	158 48	+2 02	160 50	182 23	21 33

Enter sign of deviation, plus if easterly, minus if westerly. Enter E. or W. after declination. If possible make a set of six observations on a run of not over 5 miles. If the set can not be completed within that limit, use a new form for subsequent observations. Enter latitude and longitude for middle of set. If practicable, measure true bearing of mark with protractor as soon as position is plotted.

20. Use of ranges for steering magnetic courses.—It is sometimes possible by the last method to identify two objects on range on one of the magnetic bearings used in compensation. It is necessary that either the front or rear range should be sharply defined and that there should be some distance between them. Draw a line of the desired bearing on the chart through one of the objects, place the vessel on this line by the three-point method, and see if another

desired range object can be identified. If no distinctive object can be identified, it is often possible to select an object on each side and then to keep the sharply defined object in range with an imiginary point which remains at the same relative distance between the side objects.

Even if a range having a desired magnetic bearing can be identified, it can not be used for compensation if there is a strong side current. In this case the vessel can be kept on the range, but it will not head toward the range.

21. Use of ranges for getting deviation.—The use of any range whose magnetic bearing can be taken from the chart will, if well defined, provide one of the best methods of obtaining deviation. The range is crossed by the vessel on any desired heading by compass, and the compass bearing of the range is noted in passing. It is, of course, essential that the vessel be on her course at the instant of passing the range or that any small difference in course be noted. If only one range is available, there will be some difficulty in crossing the range when the compass course corresponds closely to the magnetic bearing of the range. Further, on certain courses objects on the vessel will interfere with getting the bearing.

Observation of compass deviations.

[Steamer, *Surveyor*; standard compass No. 51413; date, April 19, 1919; observer, J. T. Watkins].

Ship's head by standard compass.	Time by hack chronometer. No. 577.	Sun's bearing by standard compass.	Remarks.
°	h. m. s.	°	
45	2 29 30	248.0	Latitude, N. 37° 02′.
60	32 00	248.2	Longitude, W. 76° 10′.
75	36 30	249.0	
90	40 20	250.2	Rudder, right.
105	44 30	250.9	Weather, fair.
120	48 10	251.4	Wind, light.
135	52 10	252.2	Sea, smooth.
150	56 10	252.8	Temperature, 50° F.
165	3 00 20	253.6	Heel, none.
180	07 10	255.1	Trim ——.
195	10 30	255.6	Hack was set to local apparent time.
210	15 00	257.0	
225	19 20	257.9	Chronometer comparison.
240	23 20	258.6	
255	27 40	261.0	
270	31 00	262.2	Chronometer..... .....
285	34 50	263.0	Chronometer correction..... .....
300	38 00	264.1	G. M. T..... .....
315	41 20	265.0	E..... .....
330	44 30	265.3	G. A. T..... .....
345	51 00	266.6	Longitude..... .....
0	56 10	267.1	Local A. T..... .....
15	59 20	267.2	Hack reads..... .....
30	4 03 40	267.8	Hack correction on local apparent time..... .....

Computation of compass deviations.

[Steamer, *Surveyor*; date, April 19, 1919; sun's declination 11° 01′ N.; ship's rudder, right].

Compass error—mean compass error=Deviation.*
Deviation=A+deviation.*

Ship's head.	Local apparent time.	Sun's bearing by compass.	Sun's azimuth from tables.	Error of standard compass.	Deviation.
°	h. m. s.	° ′	° ′	° ′	° ′
0	3 56 10	267 06	259 48	−7 18	−1 33
15	59 20	267 12	260 20	6 52	−1 07
30	4 03 40	267 48	261 04	6 44	−0 59
45	2 29 30	248 00	241 57	6 03	−0 18
60	32 00	248 12	242 35	5 37	+0 08
75	36 30	249 00	243 42	5 18	+0 27
90	40 20	250 12	244 38	5 34	+0 11
105	44 30	250 54	245 34	5 20	+0 25
120	48 10	251 24	246 22	5 02	+0 43
135	52 10	252 12	247 21	4 51	+0 54
150	56 10	252 48	248 14	4 34	+1 11
165	3 00 20	253 36	249 08	4 28	+1 17
180	07 10	255 06	250 35	4 31	+1 14
195	10 30	255 36	251 16	4 20	+1 25
210	15 00	257 00	252 10	4 50	+0 55
225	19 20	257 54	253 02	4 52	+0 53
240	23 20	258 36	253 49	4 47	+0 58
255	27 40	261 00	254 39	6 21	−0 36
270	31 00	262 12	255 17	6 55	−1 10
285	34 50	263 00	256 00	7 00	−1 15
300	38 00	264 06	256 35	7 31	−1 46
315	41 20	265 00	257 11	7 49	−2 04
330	44 30	265 18	257 45	7 33	−1 48
345	51 00	266 36	258 54	7 42	−1 57
Means		257 55	252 00	−5 55	
Magnetic declination from shore observations (or *chart*)					5 45 W
Mean compass error−declination=A= −10′.					

22. Swinging Ship.—In order to obtain the values of the deviation for all headings, systematic observations must be made. The operation is called swinging ship and a definite procedure must be followed. This procedure is brought out in the example which shows the form used by the Coast and Geodetic Survey for observing and computing deviation. This form is prepared especially for the sun, but may be used for other objects with some slight modifications. The vessel is placed on a given compass heading as north, the deviation obtained, and is then swung to the right, steadying on successive headings varying by 15°, 30°, or 45° according to conditions, the deviation being observed on each heading. As soon as a complete set is made with right rudder, another similar set is obtained with left rudder.

The time required to complete the swing is lengthened as the number of selected headings is increased, but greater accuracy results for the interpolated values for the intermediate points. It is desired that survey vessels, if possible, use 15° intervals.

23. Necessary precautions in swinging ship.—The vessel must be kept accurately on course during the observation of deviation. Bad steering not noted at the time of obtaining the deviation may introduce serious error. If the vessel is not on the desired course at the time of making the observation, the actual course should be noted and recorded. Care in taking and reading bearings is most essential. It is important, if the sun is used, that the time be correct

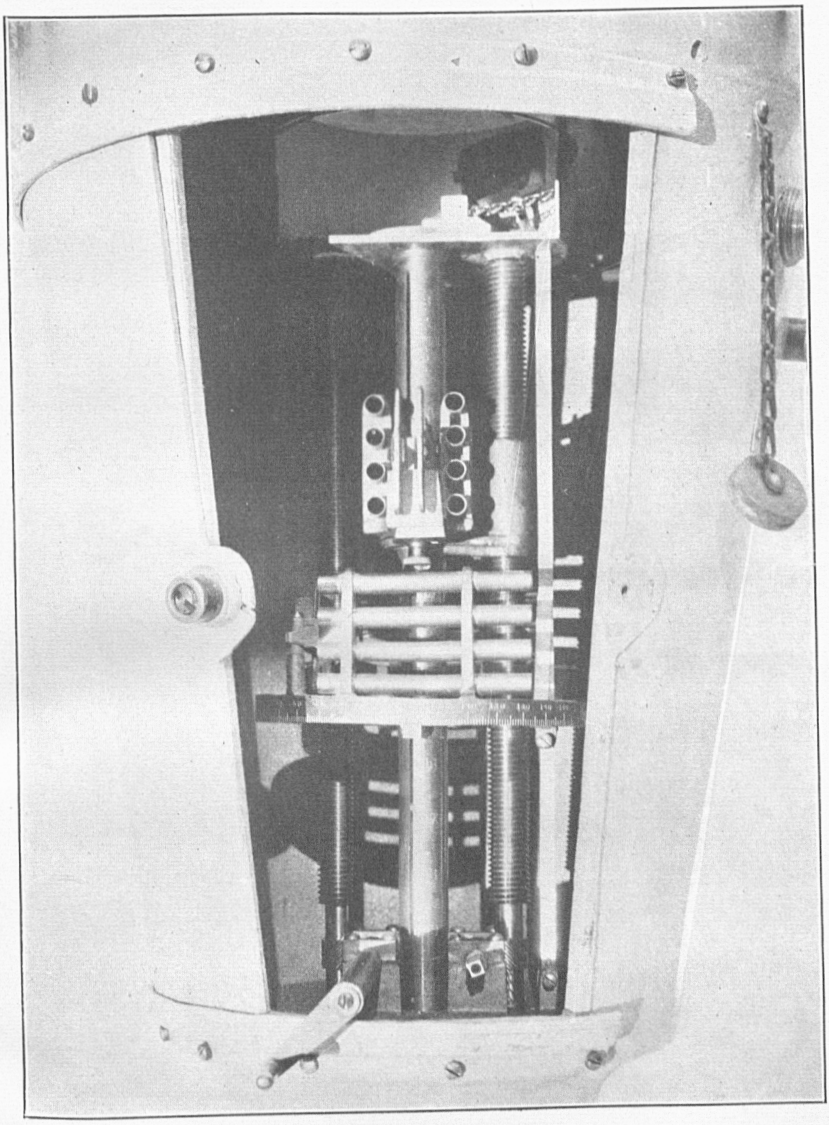

FIG. 6.—BINNACLE DETAILS.

or that the watch error be accurately known. If a pelorus is used, it should be correctly set.

24. The vessels should remain on each course several minutes before the observation is made. With all these precautions there is usually some difference between readings obtained on the two swings. The mean value is used. Intermediate values are obtained either by a Napier diagram, or else by computation as explained in paragraph 192–199. The Napier diagram and its use are explained in the American Practical Navigator. The observations are plotted and a smooth curve drawn through them. This was formerly of the highest importance, as the possibility of close compensation was not realized. If compensation is carried through according to the standard fixed in paragraph 37, a Napier diagram is unnecessary.

25. In order to get good deviations, the variation should be known accurately. Any great difference between the actual variation and that used enters directly as an error in every deviation. This difference may be due to errors in the original magnetic survey on which the variation of the chart is based, to inaccurate application of the annual change, or to local magnetic disturbance.

26. There are numerous stations at which the magnetic variation has been determined by the Coast and Geodetic Survey, and the results are available to mariners and others interested. By selecting the vicinity of such a station near a harbor or near the shores of traversed water lanes, ships may be swung with the certainty of obtaining the best results possible.

27. Purpose of obtaining deviation.—Deviations may be determined before compensation or after. In the first case the value is only for studying the magnetic changes of the ship, and such deviations have little practical value in navigation. Swings after compensation to determine its effectiveness and to determine the deviations for actual use in navigation are the more important.

The full value of the swings can not be obtained without making the analysis. This is discussed in paragraphs 192 to 199.

COMPENSATION.

28. Preliminary precautions.—The vessel should be on even keel and all movable iron or steel should be secured in its customary position when at sea. It is assumed that the binnacle is properly placed with regard to the midship line, that the compass is centered, and that the lubber line is in the fore-and-aft line of the vessel. Methods of meeting these requirements in the first installation and of testing their correctness are given in paragraphs 83, 99–103.

29. Binnacle.—The method of compensation will be described for a Navy standard binnacle which has trays for the magnets which can be readily moved up or down and secured at the desired place. The principles are exactly the same for any other type of binnacle. (See figs. 2 and 6.)

OPERATIONS.

30. (1) Set spherical correctors in middle position unless it is known that some other position is more nearly correct. Place heeling magnet in its tube, north or red end up, unless it is known that the

south end must be up, and lower to the bottom of the tube. The magnet trays should be below the middle position.

31. (2) Steer magnetic north. Enter the athwartship magnets in their trays, placing the same number on each side, with north or red end to starboard for east deviation, and to port for west deviation. Move the tray till the ship's heading is north by compass. It is a matter of experiment to find the proper number of magnets and the correct position of the tray. The binnacle is designed so that it can be placed on widely differing types of vessels so there will always be several possible solutions of the problem. It is preferable to select that in which by using more magnets the tray is kept at a greater distance from the compass.

For this and other headings used in compensating the compass, the vessel should be held not less than three minutes on each course, the compensation being completed by the end of this time.

32. (3) Steer magnetic east. Enter fore-and-aft magnets on both sides of the binnacle with north or red ends forward for east deviation and aft for west deviation. Move the tray until the ship heads east by compass.

33. (4) Steer magnetic south. If any deviation is found correct half of it by slightly changing the position of the tray containing the athwartship magnets.

34. (5) Steer magnetic west. If any deviation is found, correct half of it by moving the tray containing the fore-and-aft magnets.

35. (6) Steer magnetic northwest. Move spherical correctors away from or toward the compass, keeping them at equal distances from the center, until the ship heads northwest by compass.

36. (7) Steer magnetic northeast. If any deviation is found, correct half of it by slightly moving the spheres.

If with spheres in the extreme position deviation is east on headings northwest or southeast, or west on headings northeast or southwest, their effect is too great, and smaller spheres must be substituted. However, large spheres set near the outer extremities of the brackets are better than small spheres close to the compass. There is no objection to the use of one sphere only, except that the appearance of the binnacle is not pleasing in that condition.

37. (8) Owing to the probability that the headings of the ship may not have been exact during compensation and that the halving of the deviation on opposite headings may not have been done accurately, it is good practice to follow the above compensation with a complete swing of the ship, both right and left rudder, steadying on 8 or, preferably, 12 equidistant headings and observing the deviation on each. This subject is discussed in full in paragraphs 22–27. Observation of the deviations after compensation is important for every vessel, but is especially important for a surveying vessel, which will have to depend on dead reckoning for the position of important sounding lines or which may be called on to obtain values of the variation in a new region. If the compensation has been carefully done, the deviations should be sufficiently small for navigation. If not, the process above described should be repeated until the deviations are reasonably small. If the compass has been properly placed, if effective compensation has been made, and if the azimuth circle is free from index error, it is possible to keep the maximum deviation down to about 1°, and the skilled navigator will set this as his aim.

Unless the deviations before compensation are unreasonably large, the compensation described above usually suffices. There are, however, two other operations which are often required.

38. (9) *Heeling magnet.*—At the first opportunity when the vessel is rolling freely, head on a northerly or southerly course. If heeling error exists, it will be shown most strongly on these courses. It will be indicated by abnormal vibration of the compass. Raise the heeling magnet until the vibration disappears. If this does not occur, try reversing the magnet in its tube. It is important that there should be careful steering, as the effect of yawing may be mistaken for that due to heeling error.

39. There is another method for compensating for heeling error requiring the use of an auxiliary instrument. This can be applied when the vessel is not rolling and may be done at the dock. Vessels are not usually equipped with this instrument, and accordingly the discussion of this method will be deferred to paragraph 184. If the Flinders bar is used, this compensation should follow its placing.

40. (10) *Flinders bar.*—The portion of the ship's magnetism compensated for under paragraphs 31 to 34 is composed of two parts, of which one is constant, or nearly so, without regard to the locality, and the other changes with the change of the earth's magnetism from place to place. Consequently, if the deviations on the cardinal points were originally large and are compensated by the magnets alone, considerable changes in the deviations are likely to take place with change of latitude. This difficulty is overcome by the use of a Flinders bar properly placed, since its effect also changes with change of latitude.

41. The Flinders bar in its simplest form is a continuous bar of soft iron about 30 inches long. The equivalent of such a bar may be so arranged that its effect upon the compass can be varied. This has been accomplished with a bundle of iron rods.

42. The best practice, however, is to have a brass tube attached to the binnacle, usually forward of the compass, with its upper end extending about 2 inches above the horizontal plane through the compass card. Short bars of varying length, fitted inside the tube, are provided, together with pieces of wood of the same size. (See fig. 2.) By this means a soft iron bar of any desired length may be inserted in the tube with its top at the top of the tube, pieces of wood being inserted at the bottom to fill the tube. Hereafter in discussing the Flinders bar this form will be understood.

43. Until data are available for determining the length of the Flinders bar, it is advisable to insert one of sufficient length to reduce the deviation on east and west to 10° before compensation, if it is in excess of that amount. This is only a rough method for reducing excessive deviations and does not insure constancy of deviations with change of latitude.

44. Placing Flinders bar by observation in two places.—The determination of the proper length of the Flinders bar requires a determination of the uncompensated deviations on the east and west headings at two places differing widely in latitude. If one of these places is at or near the magnetic equator where the dip is zero (see par. 130) the problem is simple. Compensate the deviations on the east and west headings by means of magnets at that place. At the

second place of observation remove any deviation on those headings by means of the Flinders bar without changing the position of the magnets.

45. If the vessel does not cross the magnetic equator, it is still possible to place the Flinders bar by observations at any two places sufficiently far removed from each other. As soon as there is reason to believe that the subpermanent magnetism has become constant, at the first opportunity remove the Flinders bar (if set approximately) and the athwartship magnets, being careful to note the previous position, so that they can be accurately replaced. Head magnetic east or west, and determine the deviation.

46. Take another exactly similar set of observations at the second selected place. Obtain the values of I and H for the two places from magnetic maps or from Table 1. The values for any place adjacent to the United States can be determined with reasonable accuracy from Table 1 by interpolation between the two nearest values on each side, the places having been selected with this end in view.

47. A simple computation makes it possible to separate the part of the deviation to be corrected by the magnets and by the Flinders bar, respectively. It should be noted that the deviations must be given with their proper sign in using the formula.

Let a (expressed in degrees and tenths) be the deviation on magnetic east or west, or mean of both, at station A.

Let b be corresponding deviation at station B.

Let $k=\frac{H_1}{H_2}$ where H_1 is value of H for station A, from Table 1 or from magnetic map showing H, H_2 for station B.

Let $k'=\frac{\tan I_2}{\tan I_1}$ where I_1 is I for station A from Table 1 or magnetic map giving I, and I_2 for station B.

Let x and y be parts of a which are to be compensated for by magnets and Flinders bar, respectively.

kx and $k'x$ are the corresponding parts of b.

Obtain x from the expression $x=\frac{b-k'a}{k-k'}$. Then $y=a-x$. (The derivation of this formula is given in par. 177.)

Example:

Station A.—$a=14.6^\circ$, $H_1=0.155$. $I_1=74.6^\circ$, Eastport, Me.
Station B.—$b=7.4$, $H_2=0.272$. $I_2=59.3$, Galveston, Tex.
$k=0.54$ $k'=0.46$.
$x=8.7$ $y=5.9$.
$kx=4.6$ $k'y=2.8$.

48. Compensation of auxiliary compasses.—Compensation of the standard or bridge compass should be followed as soon as practicable by compensation of the steering and emergency compasses. It is obvious that it is only necessary to steer magnetic courses by means of the known deviations of the standard compass and the compensation of the other compasses can be made in the manner that has been described.

KEEPING THE COMPASS COMPENSATED.

49. Keeping the compass compensated.—Even when a compass is in perfect mechanical and magnetic condition, it will not in general remain compensated for a long time, owing to changes in the magnetic condition of the vessel or to changes in the compensating devices. Changes in the deviation with lapse of time are to be expected, and failure to recognize this may lead to disaster. The navigator should avail himself of every opportunity to redetermine the deviations and should swing ship to determine the deviations on the cardinal and intercardinal points at least, at regular intervals, so that he can improve the compensation as soon as it becomes necessary.

50. Causes of change of deviation.—There are several cases where the compensation must be watched with special care. A new vessel and a vessel that has been under repairs at a dock without change of heading are especially subject to changes in compass deviations when first put into active service. A vessel that has been on the same course for several days at sea, with rough water, is likely to need recompensation on change of course and for some time thereafter.

51. If there is no Flinders bar, or if one is placed approximately, changes of deviation will come with change of latitude.

52. The spherical correctors once in place would not have to be moved were it not for possible effect on them of compass needles. The spheres should be tested and reannealed if necessary by the method given in paragraph 75.

53. The Flinders bar may pick up magnetism and have to be reannealed. The test for this and the method of reannealing are given in paragraph 76. This trouble is not usual, except in such cases as gun fire on naval vessels, or possibly as the result of stray electric currents on the vessel.

54. Accidental sources of deviation.—The accidental sources of unusual deviation should never be forgotten by the navigator. He should remember that iron or steel in the cargo affects the compass just as does the ship itself. The vessel's electrical circuits may send stray currents through iron or steel near the compass and cause entirely different effect from such metal not acting as an electrical conductor. Even a brass rail may affect the compass under such conditions. Proper insulation of radio circuits is important in this connection. A vessel struck by lightning is likely to have very marked changes in the deviation. Running with forced draft may overheat the stacks and thereby cause changes in their magnetic condition which may affect the deviation. Many shipwrecks have been traced to such unexpected changes in compass deviations. Navigators should never fail to realize that, with regard to the compass, eternal vigilance is the price of safety.

55. Continuous compensation.—A compensated compass is steadier and more reliable than one not compensated. It should be the practice of the careful navigator to keep the standard compass closely compensated at all times, and care in this matter should be a recognized test of the ability of the navigator. Several types of binnacles have been devised which make it specially easy to maintain compensation. The essential feature is the placing of graduated

scales so that the amount of movement of the various correctors can be measured. The procedure with such a binnacle is as follows:

56. Steer magnetic north or south, holding course by means of steering compass, and note effect of moving the athwartship magnets up exactly 1 inch. Then return magnet to previous position and see whether compass reading is the same as before. Then obtain effect of lowering 1 inch. Obtain value of H from Table 1, or magnetic map.

57. Repeat the same process with the fore-and-aft magnets on magnetic east or west. Then steer on any intercardinal point and note the effect of moving the spherical correctors (both at the same time) in and out 1 inch. Then prepare a table showing the distance the correctors must be moved to give 1° of change.

58. So long as the condition of the correcting magnets remains the same the effect of the magnets on the compass will be the same for the same place. At a different place, however, the effect on the compass will be the first amount multiplied by the ratio $\frac{H_1}{H_2}$ taken from Table I or magnetic maps, H_1 and H_2 being the values of H at the two places.

59. While cruising, at any convenient time, change course to the nearest cardinal point, observe deviation, then to the nearest intercardinal point, and then to the other cardinal point of the quadrant, observing deviation at each. Then return to the original course. The deviations can then be computed and the required changes in the position of the correctors made according to the tables, multiplying each tabular value by $\frac{H_1}{H_2}$, after the vessel has resumed its course.

If there is reason to believe that the variation is not sufficiently well known, the deviation should be obtained on an intercardinal point 90° from the first used and on the opposite cardinal points. This will not usually be necessary, as the magnetic charts of the earth are now generally reliable. In any case less time will be required than for full compensation, by the usual methods, especially as compensation is not made till proceeding on course. The correctness of the compensation can be tested by determination of deviation on the courses followed as opportunity offers.

60. Compass record should be kept.—It is important in all compass work, but especially when this method is followed, to keep a record of all changes made in the positions of the compensating magnets.

SPECIAL CASES IN COMPENSATION.

61. Compensation when only one compass is available.—The methods that have been described presuppose that a steering compass is available for use in compensating the standard compass. This may not be the case, especially for small vessels and launches.

62. The method of selecting ranges from the chart, described in paragraph 20, can be used with a single compass and when conditions permit, this is probably the most satisfactory method.

If ranges can not be found, another method can be used, if proficient with the sextant and three-arm protractor. Stop vessel and take and plot a three-point fix. Measure off on the chart the angles, at the position of the vessel, between some object near one of the desired magnetic courses and the course itself. Set this angle off on a sextant and identify point on shore which lies on desired course. Then steer for this point. After a few minutes repeat the process and change to new point if necessary. This method will not be accurate unless the angles are quickly taken and plotted. An additional safeguard is introduced by selecting the object near the course desired as the change of angle due to movement of vessel between taking of bearing and noting point on course will not be great enough to cause error. It should be remembered that errors of steering and currents or wind may displace the vessel enough to make a change of the point ahead necessary in order to hold the desired course.

63. Compensation for small craft.—The methods that have been given are applicable to any craft down to a 50-foot launch, and binnacles are made for large launches that are fully equipped with correctors. If in any case binnacles are not available, correctors can be nailed in position after being placed by the principles given.

64. For small launches compensation of the compass is not usually made, chiefly because the small size of the compass makes close navigation impossible. Several precautions should be taken.

(1) The compass should be placed in the fore-and-aft line, amidships if practicable.

(2) Anchors, gasoline drums, and other movable iron should be kept as far from the compass as possible and should not be moved around while cruising at night or in a fog.

(3) If pilot-house control is used, movable levers near the compass should not be of iron or steel.

65. It is often possible to find a place for the compass where it is less affected than elsewhere by the metal of the launch. If with every precaution deviations are excessive, compensation can be made by using small fore-and-aft and athwartship magnets placed by the principles given. In this case the compensation may be made closely enough at the outer end of a dock which has no machinery or other large masses of metal near the end. By means of the chart the launch can be swung to the desired direction at either corner. The magnets can then be placed to reduce the deviations in the same manner as has been described for larger vessels. The spherical correctors and Flinders bar will, in most cases, be an unnecessary refinement.

66. Compensation without known bearings or variation, using distant object.—There is a method by which the compass can be compensated with fair results even when it is impossible to determine the correct magnetic bearing of a distant object and when the variation of the place is unknown. This method requires a longer time to make the compensation than does either of the methods which have been given and is not recommended except under the conditions just given. This method is as follows:

67. Steer magnetic north as nearly as practicable and take a bearing on the distant object. Then steer magnetic south as nearly as practicable and again take a bearing on the distant object. Com-

pensate the compass for one-half the difference between the two bearings. Again steer north and compensate for one-half the remaining difference.

68. Do the same on east and on west headings, compensating on each heading for one-half the difference between bearings.

69. Steer on one of the intercardinal headings (NE., SE., SW., or NW.,) and then one of the adjacent intercardinal headings, compensating by movement of spheres for one-half the difference between bearings as before.

70. The adequacy of this final compensation will depend upon how closely the vessel can be placed on magnetic courses, and it is therefore probable that the first attempt to compensate will not give satisfactory results. It should, however, materially reduce the deviations so that the vessel can then be put more nearly on the required course. By repeating the operations the deviations can be reduced until the compass has been sufficiently compensated. This method is particularly useful for testing and improving the compensation of the compass when the vessel is in an unsurveyed country when cloudy and rainy weather prevail.

71. Compensation by using rate of change of sun's bearing.—The following method is practically that just described, though the sun is used instead of a shore object.

A table of sun's bearing is prepared for 10-minute intervals and for the nearest degree of latitude and declination only. Steady the ship as near magnetic north as possible and hold this course with the steering compass. Observe a bearing of the sun. Then steady the ship as nearly as possible on magnetic south and take another azimuth. By the use of the rate of change from the table correct the bearing taken when the ship was heading north to what it would have been at the time the bearing was taken on the magnetic south heading. Take the mean of this computed bearing and that observed when heading south. A compass compensated for all but constant error would have given this mean bearing at the time the observation on the south course was taken. Carry this mean value forward by means of the tabular rate of change, and at any instant bring the sun to bear on the mean thus obtained, by raising or lowering the athwartship magnets. Repeat observations on magnetic north and south until the sun has the same bearing on both headings.

72. Repeat the same observations with the ship heading as near as possible to magnetic east or west, using the fore-and-aft magnets.

73. Repeat the observations with the ship heading northeast and southeast, moving the spheres in or out as necessary. Note that this adjustment is made on adjacent intercardinal points, while the previous adjustments were made on opposite cardinal points.

TEST OF MECHANICAL CONDITIONS OF COMPASS AND AZIMUTH CIRCLE.

74. A program of compass inspection is given for the use of the navigator which will reveal any defects of the instrument and make it possible to distinguish between those that can be quickly remedied and those which require that the compass be replaced, either during repairs or permanently.

75. Spheres.—The standard test for the spheres given in various publications is as follows:

Remove all fixed magnets, including the Flinders bar. Move the spheres in on the arms as close as possible to the compass, and note heading by compass. Turn one sphere at a time on its axis, stopping after each turn of 90°. Note the deflections of the compass, if any. Should the deflections exceed 30′ for any position of the sphere, reanneal the sphere by heating to a dark red. Cover with ashes and allow to cool. Then replace.

76. Flinders bar.—To test the Flinders bar remove all correctors, including the spheres, unless they have been recently tested and are found to cause no deflection. Head magnetic east by means of steering compass. Note the deviation. Reverse the Flinders bar in its holder and note the difference between the new deviation and the former one; if this difference exceeds 1° the bar should be reannealed in the same manner as for the sphere.

77. Magnetic moment.—Dismount the compass from the binnacle and set it up at a suitable place on shore that is free from local magnetic disturbance. If possible this should be a magnetic station of the Coast and Geodetic Survey. There are such stations at every port and at many other places along the coasts. Descriptions of stations and present values of the magnetic elements can be obtained by application to the Director, Coast and Geodetic Survey, Washington, D. C.

78. The compass should be transported with the utmost care. If carried in the normal position care should be taken that the instrument is not subjected to twisting or jarring motions. If carried face downward the same precautions should be exercised. The latter method is probably best for the compass, but there is one thing to be guarded against. If the paint has disintegrated, particles of paint may adhere to the jewel when the compass is again righted and cause sluggishness.

79. A thermometer should be provided so that readings can be taken near the compass bowl at intervals during the observations.

80. Note reading by compass, using the same lubber line as aboard ship. Deflect the needle through about 10° by means of a spare magnet or any suitable piece of magnetized steel. This should at once be removed to a safe distance. Note the exact time when the previous reading passes the lubber line and also the instant when it returns to the same point. The interval between is known as the time of vibration, and should agree approximately with the value given in Table 2, taking H and temperature into account. It is wise to make three separate determinations of the time of vibration and take the mean, to eliminate accidental errors. The temperature should be noted for each set. Failure of the compass to meet this test is probably due to a defective jewel or to a blunted pivot.

81. H is taken from a table or a magnetic map. The temperature in the table is that of the liquid. It is therefore important that the test be made either inside a tent or on a dull, calm day, when temperature changes are not rapid. This test should be made once a year or whenever the compass appears sluggish.

82. Sensitivity.—By means of a reading glass note the heading very closely. Draw the compass card 2° to the right by means of a magnet, remove the magnet, and note whether the card returns to the same

point. Repeat, drawing compass card to left. This test should be repeated for several positions of the bowl.

83. Centering.—The most satisfactory and the simplest way to test for centering is to take the compass bowl ashore and set it up with suitable arrangements. The compass should be carefully leveled, and the lubber line ordinarily used in conning the ship is the one on which observations should be based.

84. The method of procedure follows: Note the readings on all four lubber lines. Now carefully lift the bowl from its bearings, turn it through 180°, and replace in position. If the opposite readings differ by 180°, the card is centered. The card should be allowed to steady itself after reversal. A repeated set of observations will serve as a check.

85. Balancing.—The compass is balanced mechanically at the place of manufacture. As the greatest effect that the change of dip (I) can have on a 7½-inch compass may be counterbalanced by the shift of the center of support one-fortieth inch, it is unnecessary to use a sliding weight on the needle, as is done with surveying compasses used on land. However, it is sometimes necessary to attach such weights, if, through bad design, the righting moment in the liquid approaches the vanishing point; that is, where the vertical distance between the center of buoyancy and the center of gravity is too small. Such a compass is unfit for use. The attachment of weights should be considered only as a temporary expedient, and the compass should be discarded as soon as practicable. In a good compass the center of gravity should be not less than one-half inch below the center of buoyancy. The point of support must be in the plane of the graduations.

86. The effect of the vessel's rolling is to make the compass bowl oscillate, owing to the failure of the gimbals to respond immediately to the motion of the vessel. This oscillation may have an important effect on the efficiency of the compass. If the point of support of the card is above the point midway between the center of buoyancy and the center of gravity, the tendency is to lift the card off the pivot. If it is below this point, the tendency is to increase slightly the pressure on the pivot and improve the stability of the card.

87. The moment of inertia must be uniform for all horizontal axes through the pivot. If not, oscillation about such an axis will produce a rotational tendency of the card in the horizontal plane whenever the axis of maximum moment of inertia makes an angle other than 0° or 90° with the horizontal axis of oscillation. If the period of oscillation is the same for any two axes at right angles, the card has the same moment of inertia for all horizontal axes through the pivot, and the balance is correct.

88. If the compass is defective in any of these ways, there is no ready means of correction on shipboard, and the manufacturer should be consulted. If the lack of balance is of any considerable degree, the compass should be replaced without delay because of the serious hazard of its continued use.

The compass bowl may be tested for balance with a spirit level. Serious lack of balance may be due to a bent gimbal ring or other eccentricity of its supports. The compass should be fixed in its gimbal supports, as any motion will cause excessive wear on the pivot and may damage the jewel.

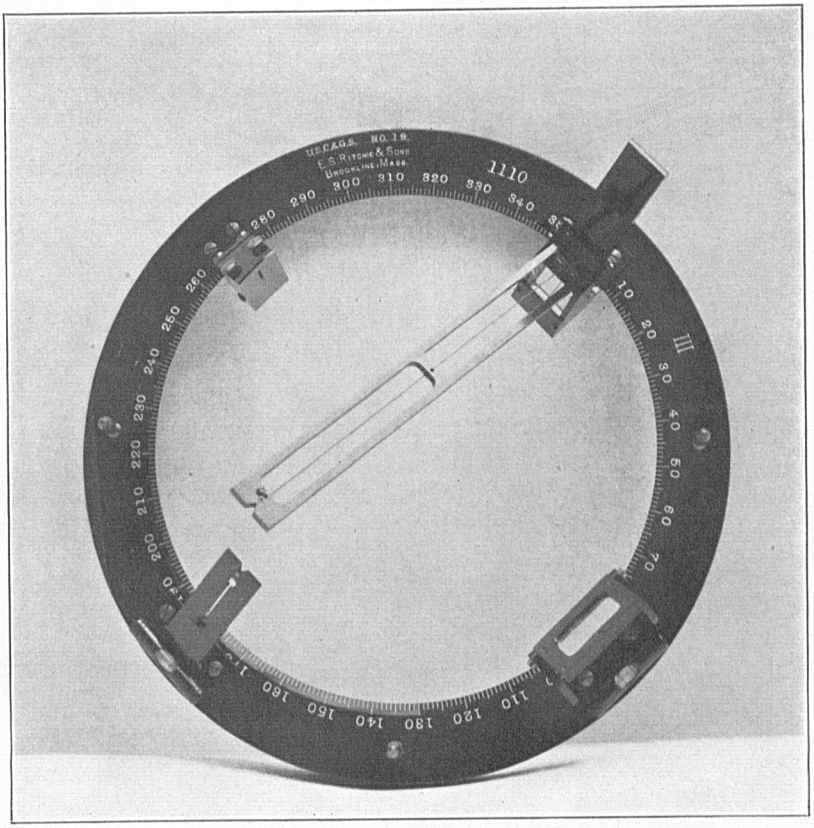

FIG. 7.—AZIMUTH CIRCLE, U. S. NAVY TYPE.

89. Steadiness.—A kinetically balanced compass—that is, one with a uniform moment of inertia—is steady. If the compass card rotates noticeably about its vertical axis when the compass is subjected to a steady oscillation on its gimbal supports, the design of the card is faulty. If unsteady vertically, the righting moment is deficient, and the distance between the center of buoyancy and the center of gravity is too small.

90. Removal of bubble.—The standard filling mixture consists of 45 per cent pure alcohol and 55 per cent distilled water by volume. The alcohol in the mixture evaporates under ordinary conditions; the effect of such evaporation is to produce an annoying air bubble in the compass bowl. To remove the air bubble take off the false bottom of the compass bowl in order to get at the expansion chamber. Place the bowl on its side with the filling hole up; the bubble will then move to a position immediately below the hole. By compressing the expansion chamber very slightly with the fingers and gradually loosening the filling screw, the air, with a small amount of liquid, can be forced to escape around the threads of the screws. The screw is then set up tight and the bowl placed horizontal. If the bubble is too large to be expelled in this way, remove the filling screw and pour in enough of the standard mixture to fill the space. Place the bowl horizontal. If the bubble has been removed, set up the screw securely.

91. Precaution in placing liquid in bowl.—When filling a compass bowl with liquid at ordinary temperatures the diaphragm of the expansion chamber should not be extended much beyond the middle of its range and should never be permitted to approach the limit of its extensibility, for the reason that expansion at high temperatures may rupture the structure, while low temperatures, short of freezing, ordinarily do little damage.

92. It is essential that losses of liquid be replaced with the standard mixture. If water alone is used the specific gravity of the liquid may be raised to such an extent that the compass card will float instead of maintaining a slight pressure on the pivot. While the standard mixture will prevent freezing at all temperatures ordinarily encountered, the addition of water may raise the freezing point so that in extremely cold weather the bowl may burst.

93. The viscosity of the liquid increases with decreased temperature, and the compass tends to become sluggish. If this happens during intensely cold weather, it is advisable to apply heat to the bowl in some way that will not disturb the magnetic conditions at the compass.

94. Distilled water must be used in the mixture, as any impurities in the water are likely to attack the paint. A seal placed over the filling screw is an excellent precaution against tampering.

95. Testing of azimuth circle[1] (see fig. 7).—Before starting compensation, the azimuth circle should be tested on shore. Draw a circle slightly larger than the outside diameter of azimuth circle on a piece of drawing paper or the back of an old chart. Two diameters of this circle are drawn at right angles to each other. Mount the paper on a plane table and carefully level. Place the azimuth circle on the paper with the line joining the mirror and the prism coin-

[1] C. and G. S. Special Publication No. 73, p. 4.

ciding with one of the penciled diameters, the height of azimuth circle above the paper being the same as the height of the circle above the card.

96. Adjust the bubble of the circle to a central position. Then proceed with the test by turning the plane table so that the sun's reflection from the mirror is directed through the prism; then clamp the table. The ray of light from the prism should then be reflected directly down the penciled diameter. Now move the mirror slightly and see if the ray of light follows along the penciled diameter. The azimuth of the sun will change very little in the time required to make the first test. If the ray of light is reflected directly down on the penciled diameter and remains there as the mirror is slightly moved, the azimuth circle mirror and the prism are as nearly correct as any field test will show.

97. Next test the direct-vision vanes. First see whether the line between them coincides with the penciled diameter at right angles to that joining the mirror and the prism. By means of the tangent screws turn the plane table till the sun's reflection is again directed through the prism; then rapidly shift the azimuth circle 90° in azimuth on the penciled circle. The direct-vision vanes should then point accurately on the sun, and the line between them should then be at right angles to that joining the mirror and the prism.

98. If as a result of this test the azimuth circle is found to be out of adjustment except for minor imperfections that can be remedied aboard ship, it should be completely repaired, replacing it temporarily if necessary. Small errors in the direct-vision vanes can be corrected, but any displacement of the prism caused by its being chipped or being thrown out of adjustment by accident can not be satisfactorily corrected, except by an instrument maker. Compensation should not be attempted under any conditions with an azimuth circle that is out of adjustment, as any error enters directly into every bearing or course.

99. Correct placing of lubber line with regard to vessel.—Just as an error in the azimuth circle affects every bearing, so will any displacement of the lubber line of the binnacle with regard to the fore-and-aft line through the compass center, or, to express it in another way, with regard to the vertical plane of the keel with the vessel upright. The following method can be equally well used for placing the binnacle so that the lubber line will be correct, or to test the correctness if there is reason to believe such a test is necessary.

100. It is necessary to locate three points in the vertical plane through the vessel's keel in the proximity of the compass station. It is assumed for any carefully molded and constructed vessel that the masts, smokestack, top of stem, etc., are symmetrical with respect to the keel and vessel as a whole, and that they may be used to determine a fore-and-aft midship line through the compass station.

101. The best manner in which to locate the three points depends on the type of vessel. A typical solution will be given. Assume that it is convenient to stretch cords between the masts. Lash an athwartship batten to each mast at such a height that the horizontal plane through them will pass through the top of the binnacle. Measure equal distances on each side of the respective masts on each batten, and drive nails to mark the points. Stretch cords between the nails so as to give two fore-and-aft lines, each parallel to and equidistant

from the midship fore-and-aft line. Place a wooden frame, such as a carpenter's horse, athwartship forward or aft of and near to the binnacle, with its top just below the cords. A nail is driven at the point midway between the cords.

102. Project the lines of the cords down to the deck by means of a plumb bob, using care to see that the plumb bob is at rest in the same vertical plane as the cord. This can be tested by projecting a series of points, marked by a crayon, and then seeing whether a a stretched cord passes through all of them. From the two lines thus established determine two points in the midship fore-and-aft line, one forward and one aft of the binnacle. Drive nails at these points and connect them with a stretched cord. Then connect the one on the proper side of the binnacle with the nail on the horse by a stretched cord. These two cords define the desired plane.

103. Place the binnacle approximately in position, using care that the alignment of the fore-and-aft cord on which it rests is not disturbed. Then place a steel straightedge in such position that both cords and the lubber line of the binnacle can be seen. Turn binnacle till the lubber line is in the plane defined by the cords.

In using thread or cord to define the lines it is important that the day be calm in order that wind pressure may not deflect them.

Part II.—EXPLANATION OF COMPASS DEVIATION AND COMPENSATION.

INTRODUCTION.

104. The compensation of the compass may be accomplished by any of the methods that have been described without further knowledge of the reasons for the operations. The best results, however, will be obtained by the navigator who is not satisfied to carry on the operations mechanically but wants to know why each operation is necessary.

105. Many books have been written on compensation, and the subject has been approached from several viewpoints. Inasmuch as this publication is primarily for the use of men with engineering education, it is proposed to treat the subject by the method of force diagrams. In this way the complicated mathematics that appears in some publications will be avoided, and yet a clear, understandable picture will be given that will be correct from the scientific viewpoint. As the complete theory is not given in every case, some approximations are unavoidable, but the presentation is based on correct fundamental principles.

MAGNETIC FIELD AND LINES OF FORCE.

106. Definition of magnet.—A piece of iron or steel which has the property of attracting iron or steel is called a magnet. The essential characteristic of a magnet is that it is surrounded by a magnetic field. At every point in the field magnetic force of definite strength and direction is exerted by the magnet.

107. Line of force.—Since the direction of the force is different at different points in the field, the conception of line of force must be introduced. A line of force in a magnetic field is a curved line, the tangent to which at any point is the direction of the force acting at the point. There is only one line of force passing through any point in the field.

108. Demonstration of magnetic field.—The form of the field of a magnet may be seen with the aid of a bar magnet and some sifted iron filings. Lay the magnet horizontal and place a pane of glass over it. Sprinkle the iron filings over the glass. Tap the glass lightly. The filings will be seen to arrange themselves as shown in Figure 9. This represents in a general way the arrangement of the lines of force in a horizontal plane. The lines of force in any other plane are of the same general form. In Figure 9 the dots in the immediate vicinity of the poles of the magnet represent iron filings which point upward from the glass in the direction of the lines of force in planes nearly vertical. For a cylindrical bar magnet the field is symmetrical about the axis of the cylinder. The end view of such a field is shown in Figure 8.

109. Poles and magnetic axis.—Each line of force is continuous from one end of the magnet to the other and then passes through the magnet to form a closed circuit. The points or places of convergence

near the ends of the magnet are called poles. The line joining the poles is called the magnetic axis.

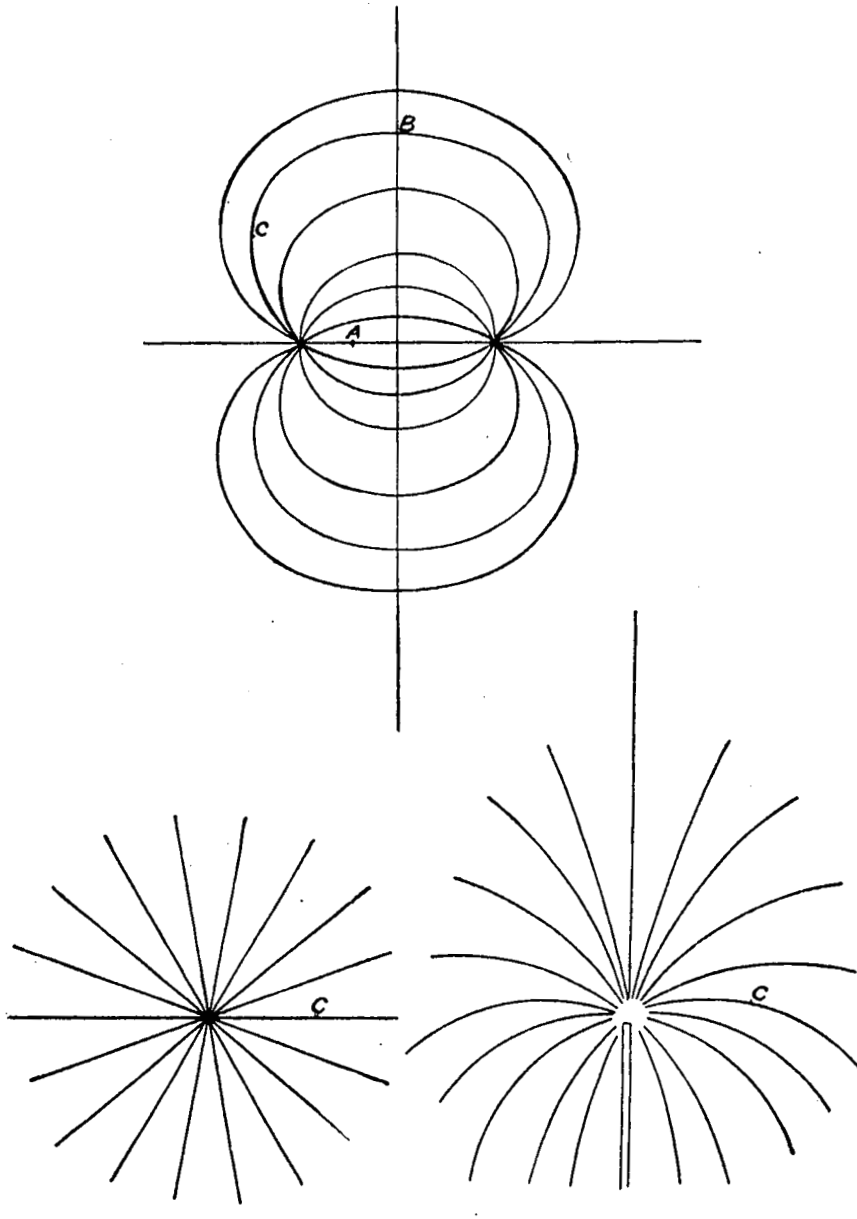

FIG. 8.—Diagrams of field of bar magnet.

110. Direction of lines of force in special cases.—For any point, as *A*, Figure 8, in the vertical plane passing through the axis of the magnet the horizontal projection of the line of force is parallel to the axis. For any point, as *B*, Figure 8, in the vertical plane at right angles to the axis of the magnet at its middle point the line of force

is parallel to the axis. For any point, as *C*, Figure 8, in the field of a magnet near its end the line of force makes a considerable angle with the axis of the magnet because of the curvature in the line of force. Now consider that *C* is a point in the field of a vertical magnet. The horizontal projection of the line of force through *C* passes through that point and the axis of the magnet, prolonged if necessary.

Nearly all of these facts can be seen at a glance by inspection of Figure 8. Special attention is called to them, as the three cases outlined are practically all that are needed for the study of compass deviation and compensation.

111. Direction of line of force.—The earth acts like a great magnet and has a magnetic field whose lines of force for a limited space may be considered as parallel straight lines. These lines make an angle with the plane of the horizon at nearly every place, but for the present we will consider only their horizontal projections. A magnet suspended or supported so as to be free to swing in the horizontal plane (hereafter called a freely swinging magnet) will take a direction whose angular departure from the true meridian is slight for the major portion of the earth's surface. The pole toward the true north is called the north and the other the south pole of the magnet. This provides a means of designating the direction of the lines of force in the magnetic field of any magnet.

112. Designation of direction.—Adopting the convention that the lines of force in the earth's field extend from south to north, the lines of force inside of a magnet extend from its south pole to its north pole, while those of its external field extend from its north to its south pole. If the direction of a line of force in the magnetic field is indicated by an arrow in accordance with this convention, a freely swinging magnet, acted upon by this field alone, will come to rest with its north pole in the direction of the arrow.

113. Position of rest of swinging magnet.—When a freely swinging magnet is at rest with its axis in the direction of the line of force through its center, the forces on both sides of the axis are in equilibrium. The magnetic field of the swinging magnet itself need not be considered, except to distinguish between its poles.

114. If the field of a bar magnet is substituted for that of the earth, a swinging magnet will take the direction of the line of force through its center with its north pole in the direction of the arrow. If the fields of both the earth and bar magnet are acting, what direction will the magnet take?

115. Magnet takes direction of resultant force.—The principle that determines this direction is that each field may be represented at the center of the freely swinging magnet by a force fixed in direction and amount. The swinging magnet takes the direction of the resultant of these forces. The resultant is obtained by the principle of the triangle of forces which is explained in any text book on mechanics.[1] This principle may also be used to replace a force by two others. A specially useful case is the resolution of a force into two components at right angles to each other.

---

[1] Elementary Practical Mechanics, J. M. Jameson (John Wiley & Sons). Practical Physics, Black and Davis (MacMillan Co.).

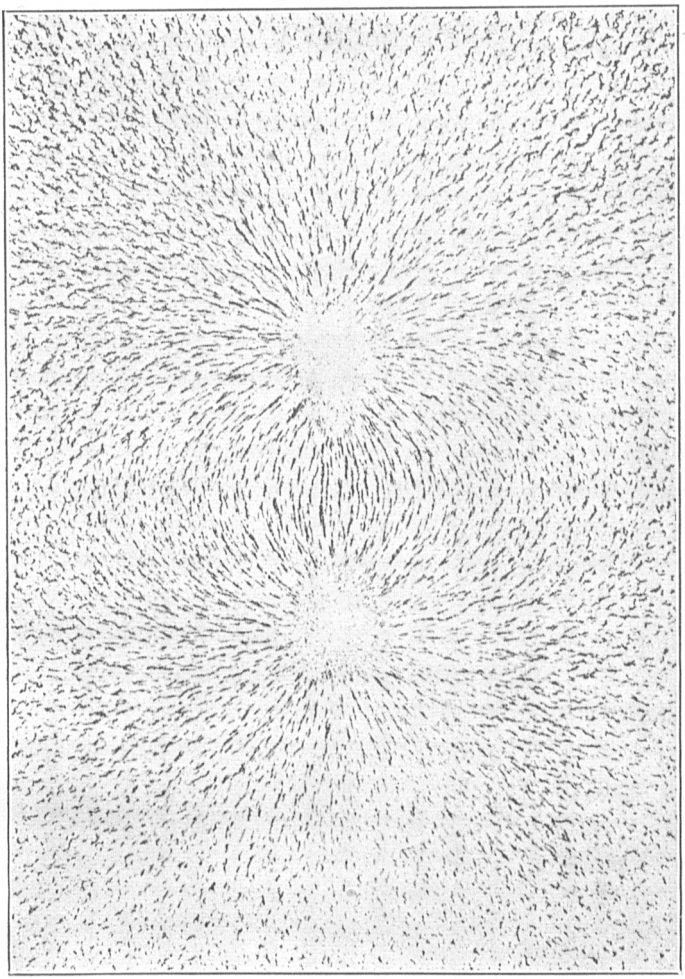

FIG. 9.—IRON FILING DIAGRAM—FIELD OF BAR MAGNET.

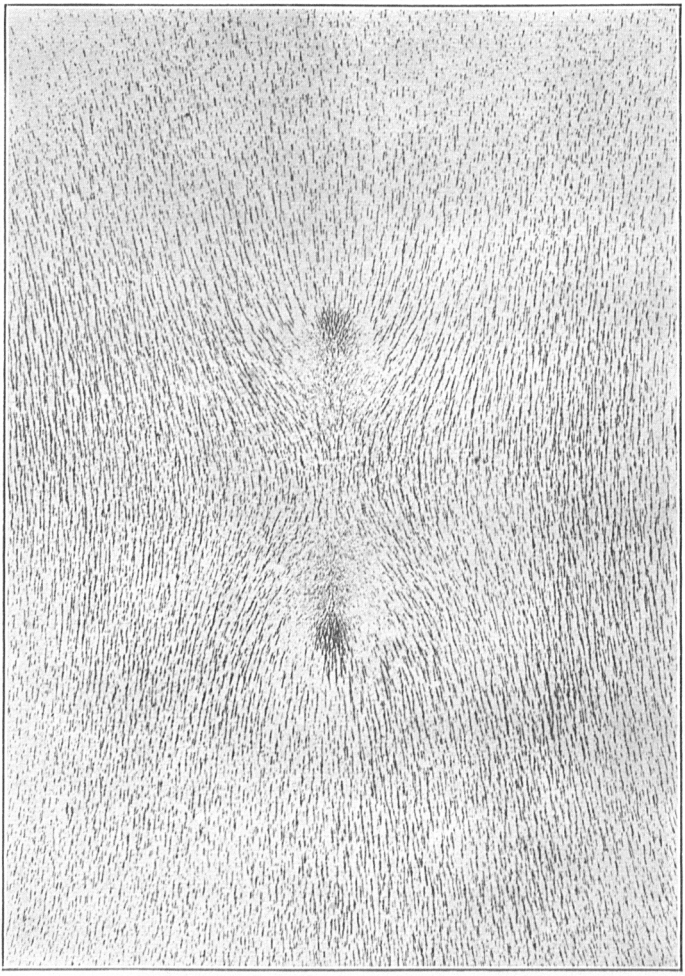

FIG. 10.—IRON FILING DIAGRAM—SOFT IRON BAR PARALLEL TO UNIFORM FIELD.

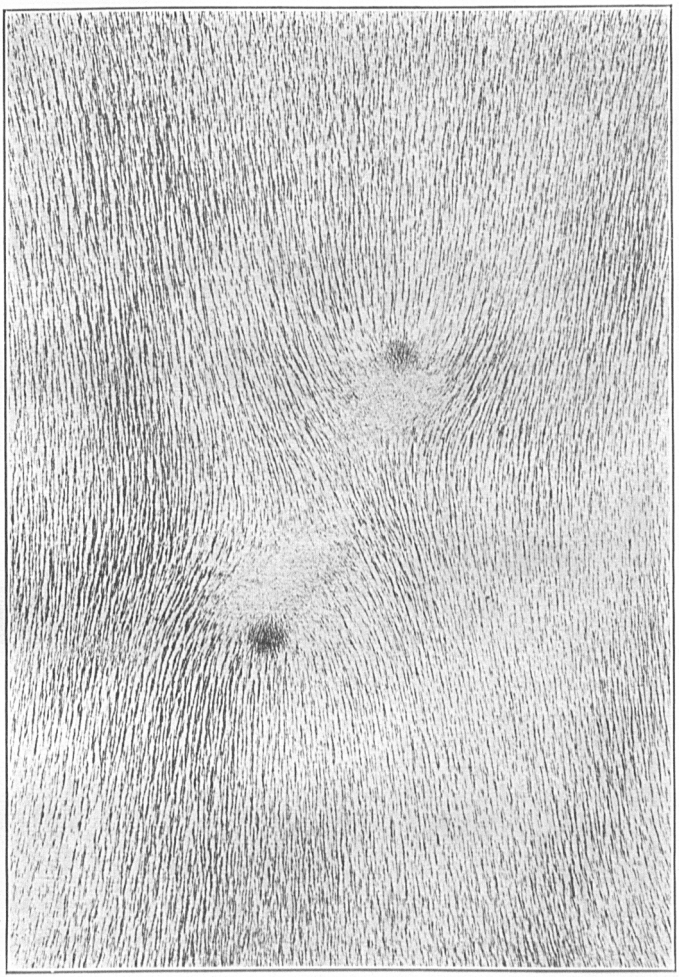

FIG. 11.—IRON FILING DIAGRAM—SOFT IRON BAR MAKING 30° ANGLE WITH UNIFORM FIELD.

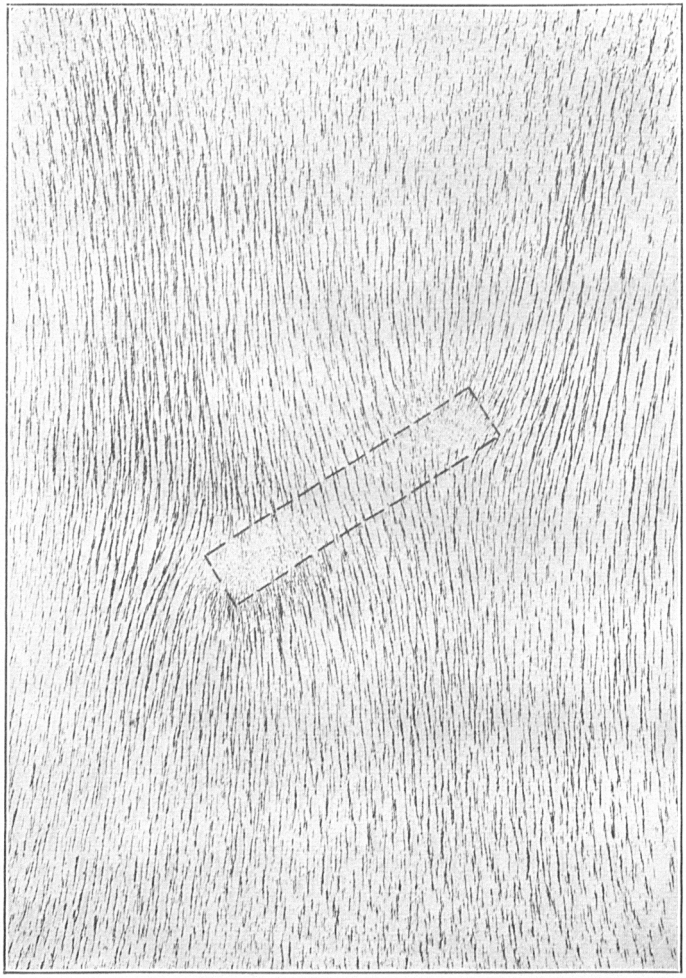

FIG. 12.—IRON FILING DIAGRAM—SOFT IRON BAR MAKING 55° ANGLE WITH UNIFORM FIELD.

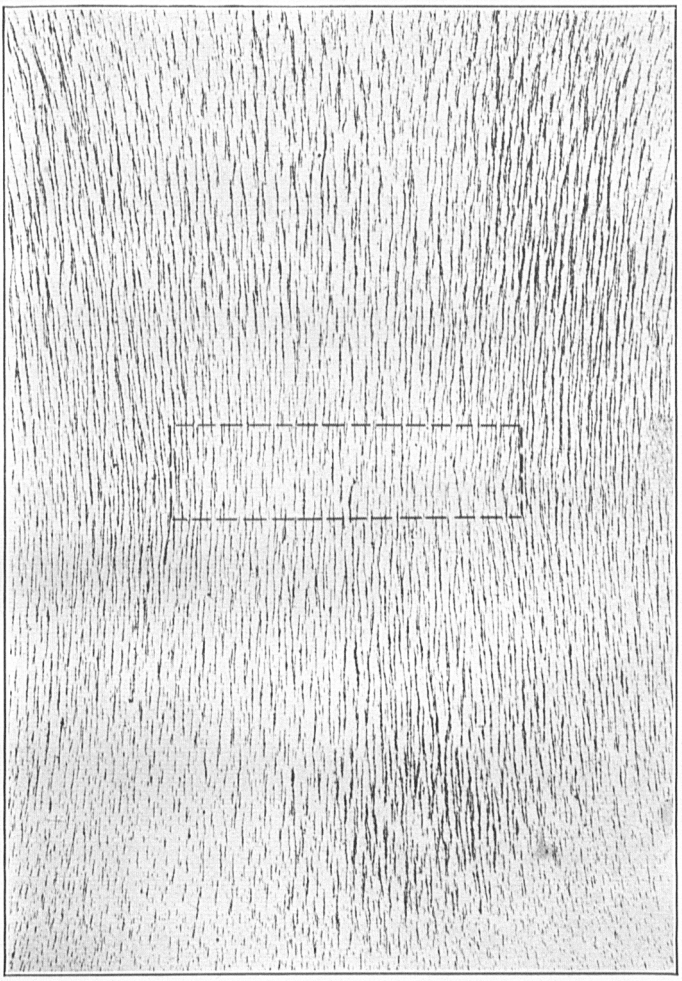

FIG. 13.—IRON FILING DIAGRAM—SOFT IRON BAR AT RIGHT ANGLES TO UNIFORM FIELD.

INDUCTION.

116. Induced magnetism.—A piece of iron placed in a magnetic field becomes magnetized by induction. The amount of magnetism which it acquires depends upon the character of the iron, the strength of the field, and the angle which the piece of iron makes with the lines of force in the field. The induced magnetism is greatest when the axis of the piece of iron lies in the direction of the lines of force and is zero when at right angles to them.

117. Magnetic properties of iron.—The magnetic properties of different kinds of iron vary greatly. At one extreme there is hard steel, which can be magnetized only in a strong field, but which loses its acquired magnetism very slowly. At the other extreme is soft iron, which is very easily magnetized, but quickly changes its magnetism with change in the magnetizing field and loses its magnetism when removed from the field. Of the intermediate grades of iron it may be said in general that the less readily they acquire magnetism the less readily they give it up and the longer they hold the acquired magnetism. Mechanical work causing vibration of the metal may under varying conditions either increase or reduce the amount of acquired magnetism.

118. The effect of turning hard-steel magnet in a magnetic field.—A hard-steel magnet has a field like that shown in Figure 8. If such a magnet is placed on a horizontal surface with its axis making successive angles with the direction of the earth's field, the force at any point in the field, fixed with regard to the axis of the magnet, will be the resultant of the force due to the earth's field and that due to the magnet's field. These forces can both be represented by straight lines of fixed length, the angle between which changes as the magnet is turned.

119. The effect of turning soft-iron bar in magnetic field.—A soft-iron bar of the same size as the hard-steel magnet has through induction a magnetic field of the same form as that of the steel magnet—that is, at any corresponding point the lines of force are identical. The form of the field is independent of the relation of the direction of the axis of the bar to the inducing field.

120. The correctness of this conception is at once apparent if we consider that the field of the steel magnet is the result of induction in a strong magnetic field. The form of the field is the same for a given magnet no matter what may have been the direction of its axis with regard to the inducing field.

121. If a soft-iron bar in a horizontal position is placed at successive angles with the earth's field, the *force* at any point in its field, fixed with regard to its axis, will, as in the case of the steel magnet, be the resultant of the force of the earth's field and that of the induced field of the bar. The important difference is that the force of the magnetic field of the bar varies with direction of its axis. If the axis of the bar is in the direction of the earth's field, this force has a maximum value in the direction opposite to the earth's field. If the bar is reversed in direction, the magnetic field will have the same form as before, but it will be reversed in direction with regard to the bar. The direction is still, therefore, opposite to the earth's field. The force is zero when the axis of the bar is at right angles to the earth's field. For intermediate positions the force varies

according to a simple law which will be developed later (par. 156), and for any one position it can be represented at any point in the field by a line of fixed length.

122. Resultant field.—The resultant field for a soft-iron bar whose axis makes an angle with the direction of a uniform field is shown in Figure 10. Similar fields for other angles are shown in Figures 11 and 13. A study of these iron-filing diagrams is instructive. It can be shown that the line of force of the resultant field at any point

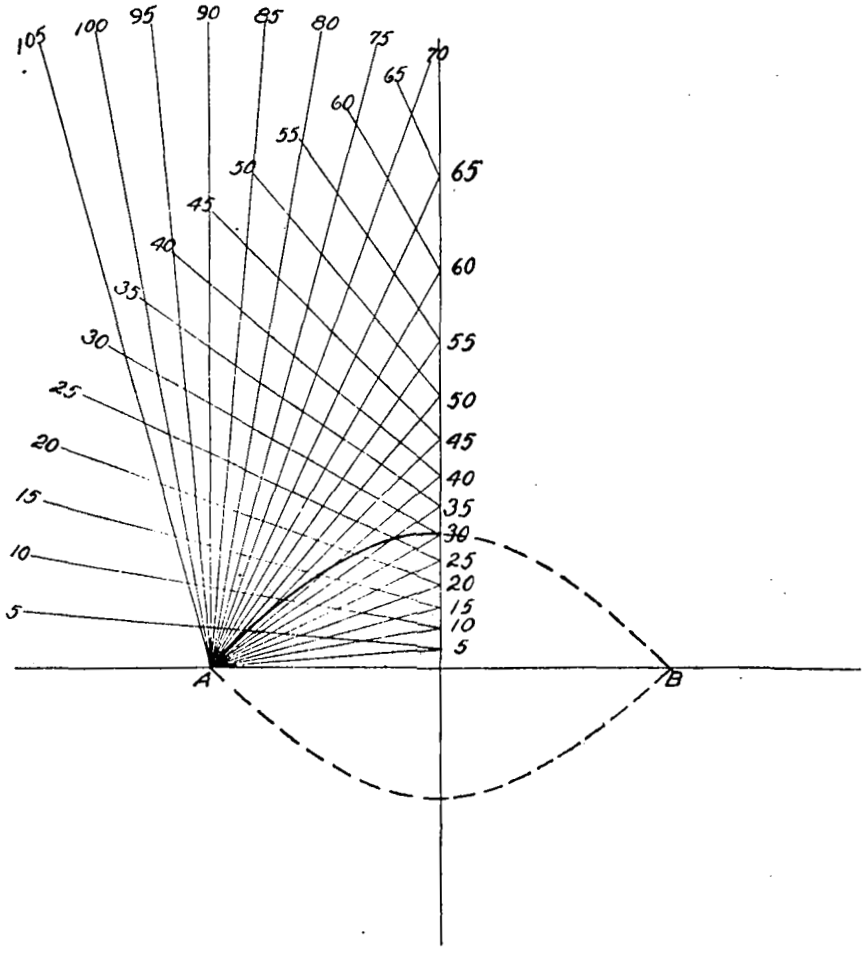

FIG. 14.—Diagram illustrating construction of lines of force.

represents the direction of the resultant of the force of the uniform field and that of a field of similar form to that of a hard-steel magnet.

123. Equation of the curve of line of force in the field of a bar magnet.—Assume that two points A and B represent the poles of the magnet. Draw AB and at C, the middle point, erect a perpendicular. The equation of any curved line of force is $\cos A + \cos B = K$ where K is a constant for any one curve. At A draw radial lines at 5° intervals extending to the perpendicular through C and

designate their intersection with this line by their angle with AB. Next place a straightedge on B and on a point of intersection and draw that part of the line which lies to the left of the perpendicular through C. Designate the end of this line by the same number as at the intersection. Thus a 20° angle at A will be designated by the figure 20 placed near its intersection with the perpendicular, and the same angle at B will be designated by the figure 20 at the left end of the line passing through its intersection point.

124. Drawing of curve (see fig. 14).—For each intersection point $K=2 \cos A$. By subtracting successive values of $\cos A$ from K we get $\cos B$. Having corresponding values of A and B for a single value of K, obtain by interpolation a point on line through A corresponding to angle B. Draw a smooth curve through all the points obtained for a single value of K. It is necessary to draw only the curve to left of the perpendicular, as that to the right is symmetrical. Also the halves of the curve on each side of the axis are symmetrical.

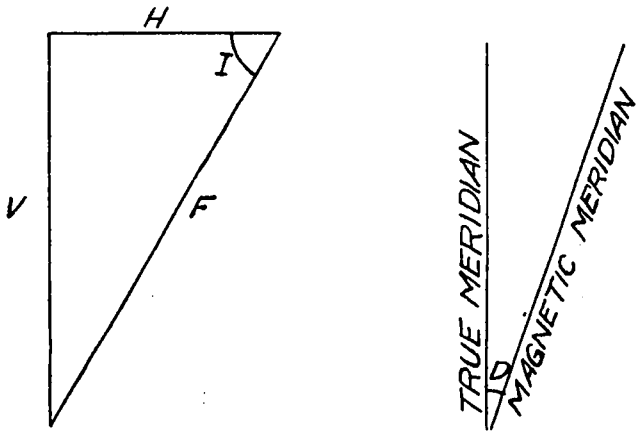

FIG. 15.—Elements of earth's magnetic field.

125. If, in preparing a table of corresponding values of A and B, $K-\cos A$ becomes equal to one, this is the limiting value of angle A for this particular curve. As intersection points farther from the axes are selected, A for any part of the curve may exceed 90°. For this part of the curve $\cos A$ is then minus and it is subtracted algebraically from K, that is, actually added.

EARTH'S MAGNETIC FIELD.

126. Variation and dip.—The earth's field is different in many important particulars from that of a bar magnet. While less regular and more subject to variations than such a field, it is so vast that for a limited space the lines of force may be considered as parallel straight lines. At any point the line of force makes an angle with the horizontal plane known as the dip and designated by the letter I. The vertical plane through this line, known as the magnetic meridian, makes an angle with the true meridian, ordinarily called the varia-

tion and designated by the letter *D*. The plane at right angles to the magnetic meridian is called the magnetic prime vertical. (See fig. 15.)

127. Total force and its components H and V.—The force in the direction of the earth's field is usually called the total force and may be designated by *F*. Inasmuch as the compass needle swings in the horizontal plane, it is necessary to substitute for *F* its two components, the horizontal, designated by the letter *H*, and the vertical, by the letter *V*. Hereafter these letters will be used in referring to these components.

128. *H* is the only part of the force due to the earth's magnetic field that can affect the direction of a magnet freely swinging in the horizontal plane. *V* does not affect the direction of the magnet with regard to the true meridian but tends to draw it out of the horizontal plane. In the case of the mariner's compass this tendency is overcome by the liquid, and in the case of the surveyor's by a shifting counterweight.

129. Magnetic elements D, I, H are obtained from maps.—The earth's magnetism is not uniformly distributed, but for most parts of the earth it is possible to obtain from magnetic maps values of the magnetic elements *D*, *I*, and *H*. *D* is given on all mariners' charts, on isogonic charts, and in such publications as Coast Pilots. Maps giving values of *I* and *H* are published by various Governments, but, as they may not be available, Table 1 has been prepared. This gives the values of *I* and *H* for the waters of the United States and Alaska and connecting waters for the route from the east to the west coast via the Panama Canal. The values are given at a sufficient number of points so that the values for intermediate points can be obtained by interpolation.

130. Magnetic pole and magnetic equator.—The magnetic map of the world shows two places, each in high latitude, where the dip is 90° and *H* disappears. These are the so-called magnetic poles, though they are not magnetic poles in the ordinary sense. It also shows a line extending around the earth where the dip is 0° and *V* disappears. This is the magnetic equator and lies in the general region of the geographical equator—nowhere more than 12° from it. There are several lines where the compass points to true north; that is, the variation is zero. These are called agonic lines. The positions of these lines change with time.

131. Short period changes in D.—The values of the magnetic elements are constantly varying. There is a systematic change in the course of the day, so that in the case of *D*, for part of the day the needle points west of its mean position and for part of the day east. The amount is not usually large enough to affect navigation, the range being from 5′ to 15′, according to the place and time of year, on the coast of the United States. The range may be as great as 30′ in the polar regions.

132. Magnetic storms.—There are occasional magnetic storms during which there may be large fluctuations, amounting to as much as 30′ on either side of the mean, but this departure is usually of short duration. It is well to avoid swinging ship to determine deviation or compensating the compass when its behavior indicates the existence of a magnetic storm. Navigators should bear in mind that magnetic storms are more frequent and more lasting in high

latitudes and that one of the usual effects is to decrease the normally small value of H. This decrease may seriously affect the efficiency of the compass.

133. Long period changes in D.—Perhaps the most important of the changes is the secular change. A chart may have the correct values for any specified year, but after several years there may be a considerable change. For this reason only up-to-date charts should be used. If old charts are used, be sure to correct for change of variation at the rate given on the chart. It should be borne in mind, however, that the rate of change can not be safely predicted far in advance. The variation taken from the chart for getting compass deviations may be more important than the variation used for the purpose of navigation, since any error in the deviation affects all subsequent navigation.

134. Local magnetic disturbances.—There are some places where the actual values of D, I, and H for a region may differ more or less from the map values. Such places are said to be locally disturbed. There are many places where there are differences of the order of 1°. There are known to be such places in Chesapeake Bay, especially one place in the main channel entering the bay near Cape Henry. There are a number of regions in Alaskan waters where the disturbance is very large and widespread. For example, in Port Snettisham, Stephens Passage, a difference of 105° in D was found in a distance of one-third mile on the shore and 55° in the same distance on the water one-quarter mile off shore. For an area of 70 square miles in Lynn Canal the variation was found to differ from 3° to 20° from the normal values for the region as a whole. A local magnetic pole with a dip of 90° has been found on Douglas Island, near Gastineau Channel. New areas of this character are found from time to time.

135. Such abnormal conditions are usually indicated by considerable change in the deviations and by obtaining deviations of marked difference on the same course in the same general vicinity. Compensation should not be attempted under such conditions.

136. Reason for deviation.—Deviation (d) is the amount by which the ship's compass points to one side or the other of magnetic north. It is east, or plus, if the compass points east of magnetic north and west, or minus, if it points west of magnetic north. The cause of the deviation is the ship's magnetic field, which changes in part with every change of heading. The deviations of an uncompensated compass are different with every heading, and at first sight it would appear to be a hopeless task to reduce all these different values nearly to zero.

THE SHIP'S MAGNETIC FIELD.

137. Source of ship's magnetism.—The ship's magnetic field is chiefly due to induction in the earth's field. Most of the ship's metal is structural steel, which is intermediate in character between hard steel and soft iron. (See pars. 117 and 119.) As hard steel can be readily magnetized only in a strong field, it may remain unmagnetized in a weak field such as that of the earth. Magnetization is assisted by vibration so long as the metal remains in the same position with regard to the inducing field, though vibration may also cause loss of magnetism if the metal is placed in some other position, especially if in the opposite direction with regard to the field.

138. Character of ship's metal with regard to magnetization.—There is then present in any vessel metal which is not magnetized, but which may be magnetized if vibration is continued with the vessel heading in the same direction for a continued period; metal with retained magnetism due to induction in the earth's field usually assisted by vibration of the metal; and metal with induced magnetism in the earth's field which changes in amount with every change of heading.

139. Temporary magnetism.—The amount of induced magnetism of the last class is usually about the same in amount for any given heading and changes only with changes in the earth's magnetism. However, as it changes in amount with every change of heading of the ship it has been given the name of temporary magnetism.

140. Subpermanent magnetism.—The retained magnetism does not change with change of heading nor with change in the earth's field. Its amount depends on the extent to which the metal is magnetized and the circumstances under which the metal has been in vibration. It can be either increased or decreased in amount. To convey the idea of independence of the heading and at the same time the possibility of change of amount, the term subpermanent magnetism is in general use.

141. Changes in subpermanent magnetism.—The ordinary changes in subpermanent magnetism follow in the same general sequence for most vessels. A vessel is built heading in a fixed direction with regard to magnetic north. The hammering incident to construction induces a subpermanent field which is fairly strong. As soon as the vessel goes into service it rather quickly loses much of this subpermanent magnetism. After a certain period the conditions become stabilized and the subpermanent magnetism may remain unchanged for a considerable period, till some new cause arises to change it.

142. If the vessel follows in the same course for several days, the vibration due to the waves and the machinery usually changes the subpermanent magnetism to such an extent that the deviations are changed to an important degree. The same thing occurs if a vessel lies under repairs at a dock for some time without change of heading. Stray electric currents or lightning may induce magnetism of the subpermanent type which remains after the cause is removed. In every case the increase of subpermanent magnetism is followed by a falling off, with a tendency to become stationary.

143. Accordingly this part of the magnetism needs special watchfulness. After periods of rapid change there may come a period of apparent permanence, suddenly followed by another period of change which may catch the navigator unawares.

144. Complexity of ship's magnetism.—While the vessel is being built it heads in a fixed direction while work is being done on its various members. Most of these are in a fore-and-aft, athwartship, or vertical position, but there are others at various angles. The magnetism of the ship as a whole is therefore very complex.

145. If one of the members in an athwartship direction happens to be nearer the compass than a larger member in a fore-and-aft direction, it may have a greater effect on the compass, since a small magnet near by may exert a force equal to or greater than a large distant magnet. Accordingly the ship's magnetism as it affects

the compass can not be represented by considering the ship as an elongated magnet, with its axis in the fore-and-aft direction.

146. It is necessary, however, to have a simple conception that will represent the ship's magnetism as it affects the compass. Subpermanent and temporary magnetism must be considered separately because the effect of change of heading on the forces in the ship's field is different for each. For simplicity all forces are considered as acting either in horizontal or vertical planes, which can be done in either case by resolving the forces in these directions. By assuming a symmetrical distribution of the magnetic material of the ship a comparatively simple representation of its magnetism can be made. This assumption is so nearly correct that it meets all of the requirements of ordinary compensation. The unconsidered forces due to a lack of symmetry usually cause deviations which if small do not require compensation, and if large must be compensated by special methods.

147. Representation of ship's magnetism by equivalent magnets.—The ship's magnetism in so far as it affects the force at the compass center may be represented by the fields of two sets of three magnets each, one set for subpermanent and one for temporary magnetism. (See fig. 16.) In each case there are two horizontal magnets, one in a fore-and-aft and the other in an athwartship direction, and a vertical magnet. In order to avoid confusion with the other magnets discussed, these will be referred to as equivalent magnets, though it should be understood that the actual fields are very complex.

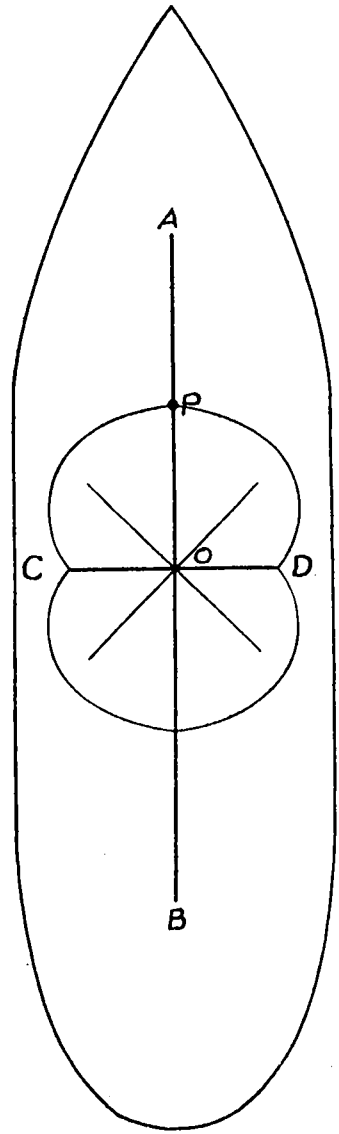

FIG. 16.—Representation of ship's magnetism by equivalent magnets AB, CD, and vertical magnet at O.

148. Force at compass center.—The compass center lies in a vertical plane which passes through the axis of the fore-and-aft equivalent magnet and which is therefore normal to the axis of the athwartship magnet at its middle point. A line of force of the field of the fore-and-aft magnet therefore passes through the compass center in a fore-and-aft direction and a line of the field of the athwartship magnet in an athwartship direction. (See par. 110.) We thus arrive at the simple conception that the force for either subpermanent or temporary magnetism can be represented by a line in a fore-and-aft direction and another in an athwartship direction.

149. Each line represents the force due to a magnetic field fixed in position with regard to the ship. It follows that the compass center remains in the same position with regard to the equivalent field regardless of the heading.

150. Relative positions of equivalent magnets.—The athwartship equivalent magnet is obviously 90° from the fore-and-aft equivalent magnet. In the case of temporary magnetism this means that when the force of one magnetic field is maximum the other is zero. (See par. 121.)

151. The axis of the vertical equivalent magnet lies in the fore-and-aft axis, but usually not at the compass center. There is therefore a horizontal component acting in the fore-and-aft direction for both the subpermanent and temporary magnetism. In the case of the subpermanent magnetism this can at once be combined with the fore-and-aft force due to the fore-and-aft magnet. In the case of the temporary magnetism the same thing can be done for any one place, but it must be treated differently in the compensation if the vessel is to cover a wide range of latitude.

152. Direction of force due to equivalent magnets.—In order to make a force diagram it is necessary to designate the direction of the forces. If the direction of the earth's field is from magnetic south toward magnetic north and east deviation is plus, a force toward the bow of the ship at the compass center is plus and one toward the stern minus. A force directed to starboard is plus and one to port minus. (See fig. 17.)

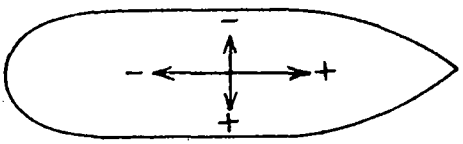

FIG. 17.—Direction of forces with respect to ship.

153. The reason for designating directions in this way can be seen by taking the case of the vessel built in a northeasterly direction. As the induced field is opposite to the inducing field (see par. 121), the fore-and-aft force is directed in a westerly direction. This would give a west or minus deviation, so that the force is minus; the athwartship force is directed to the east and to starboard. As this gives east deviation, the force is plus. By establishing the direction of the forces by the direction of the induced field for vessels built in the other quadrants and then considering them as heading between north and east, it is found that the rule holds the same for all cases. The force due to the vertical magnet is designated plus or minus by the same rule. As the axis of the vertical magnet is usually abaft the compass, the force is generally minus.

154. Apparent exception to the rule.—The rule for designating directions for the field given in paragraph 152 applies directly to subpermanent magnetism. In the case of temporary magnetism the rule applies directly to the force due to the vertical equivalent magnet. In the case of the horizontal equivalent magnets there is an apparent exception to the rule.

155. For a vessel heading northeast the fore-and-aft force is directed toward the stern, and is therefore minus by the rule. The athwartship force is directed to stern, and is therefore plus by the rule; for a vessel heading southwest the fore-and-aft force is directed toward the bow, and according to the rule is plus, while the athwartship force is directed to port, and is therefore minus by the rule. The forces,

however, are reversed with regard to the ship, and therefore their signs must be reversed. Accordingly, it is perhaps simpler to disregard the rule in this case and to consider that the forces due to induction are opposite in direction to the earth's field, and therefore if the direction is westward of magnetic north the force is *minus* and if eastward it is *plus*. For opposite courses the amount of the force at any point and its direction with regard to the earth's field are identical.

156. Force diagram for subpermanent magnetism.—In figure 18 the force acting at right angles to the direction of H is:

$$CP = AB \sin Z + BC \cos Z.$$

If AB and BC are given the proper signs, the resultant deviation will have the proper sign. The point C lies on the circumference of a circle whose center is A and radius AC. The deviation is zero at the two points where $AB\sin Z$ and $BC\cos Z$ are equal and of opposite sign and maximum where they are of the same sign.

$$\text{Let } AO = H. \quad \text{Then } \tan d = \frac{CP}{H - AP}.$$

As AP can have any value from $+AC$ to $-AC$, even if AC is small compared to H, there will be appreciable differences of deviation on opposite headings due to subpermanent magnetism. Part of the function of compensation is to balance AP as well as CP. While the mean value of the force in the direction of the magnetic meridian is H even without compensation, the individual deviations may vary considerably.

157. For small values of AP deviation due to subpermanent magnetism can be considered to vary inversely as H. If CP is balanced closely, changes in the value of H will not be important; otherwise they will. This is one of the reasons why it has been stated (par. 132) that in high latitudes where H is small reduction of its value during magnetic storms may be serious.

158. All of the three magnets representing subpermanent magnetism have been considered, except the vertical field of the vertical magnet. This is important only in the case of heeling error and will be discussed under that subject.

159. Force due to temporary magnetism.—The force due to the vertical equivalent magnet at the compass center must be considered separately because its effect on the compass follows different laws, with change of heading, from the horizontal equivalent magnet and is more closely related to the effect of subpermanent magnetism. As stated in paragraph 153, it usually causes a minus force in a fore-and-aft direction. As the vessel moves from place to place the force due to the vertical equivalent magnet varies with the change in V. It is convenient to speak of the temporary magnetism of the vertical equivalent magnet as due to induction by V or V induction.

160. Law of change of deviation due to V induction.—It is then approximately true from paragraph 159 that for a given heading $\tan d = \frac{eV}{H} = e \tan I$, where e is an induction factor which indicates that the force at any point in the induced field varies directly with the amount of the inducing force.

Since deviation due to subpermanent magnetism varies inversely as H, and that due to V induction as tan I, it is clear that the same method of compensation will not hold for all latitudes.

161. Force diagram for equivalent horizontal magnets.—In paragraphs 119 to 122 the effect of turning a soft-iron bar in the magnetic field is given. The fields of the temporary equivalent magnets in the horizontal plane follow the same laws.

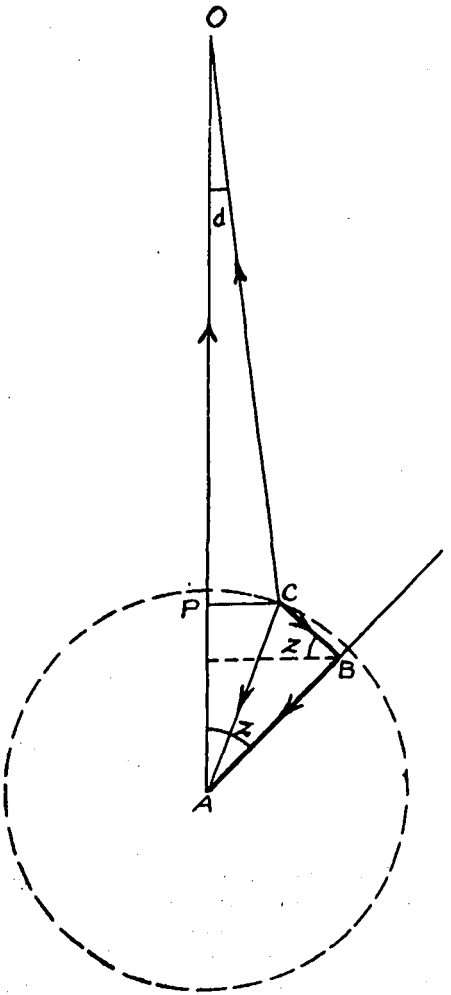

FIG. 18.—Force diagram—subpermanent magnetism.

162. The analysis of the field of the horizontal equivalent magnets for any heading, as northeast, indicates that the resultant of a minus fore-and-aft force and H would give west deviation. Figures 10 to 13 give a visible demonstration of the same fact, as invariably the lines of force of the resultant field tend to cross the magnet rather than to bend in the direction of its length. The explanation is that the field of the athwartship equivalent magnet is the stronger. Knowing this the force diagram can be prepared.

163. In the force diagram, Figure 19, all forces are considered as acting at the compass center. Let $AO = H$ and AB represent the fore-and-aft force with ship heading magnetic north. For any heading Z draw a line through A, making angle Z with AO and drop perpendicular from B to meet this line in C; then AC is the fore-and-aft force due to the fore-and-aft temporary magnet for heading Z. Through C draw a line parallel to AO and let CE represent the athwartship force due to athwartship equivalent magnet when the ship heads magnetic east.

164. From paragraph 162 CE is longer than AD. From E drop a perpendicular to meet CB, prolonged in D; CD then represents the athwartship force for heading Z. From D drop a perpendicular to AO at P; AD is then the resultant of the fore-and-aft and athwartship forces. Then OD is the resultant of AD and H. Angle AOD is the deviation, d, due to the horizontal temporary magnets.

$$\text{Then } \tan d = \frac{PD}{H - PA}$$

$$\begin{aligned} PD &= CD \cos Z - AC \sin Z \\ &= CE \cos Z \sin Z - AB \sin Z \cos Z \\ &= \tfrac{1}{2}(CE - AB) \sin 2Z \end{aligned}$$

d accordingly varies approximately as $\sin 2Z$.

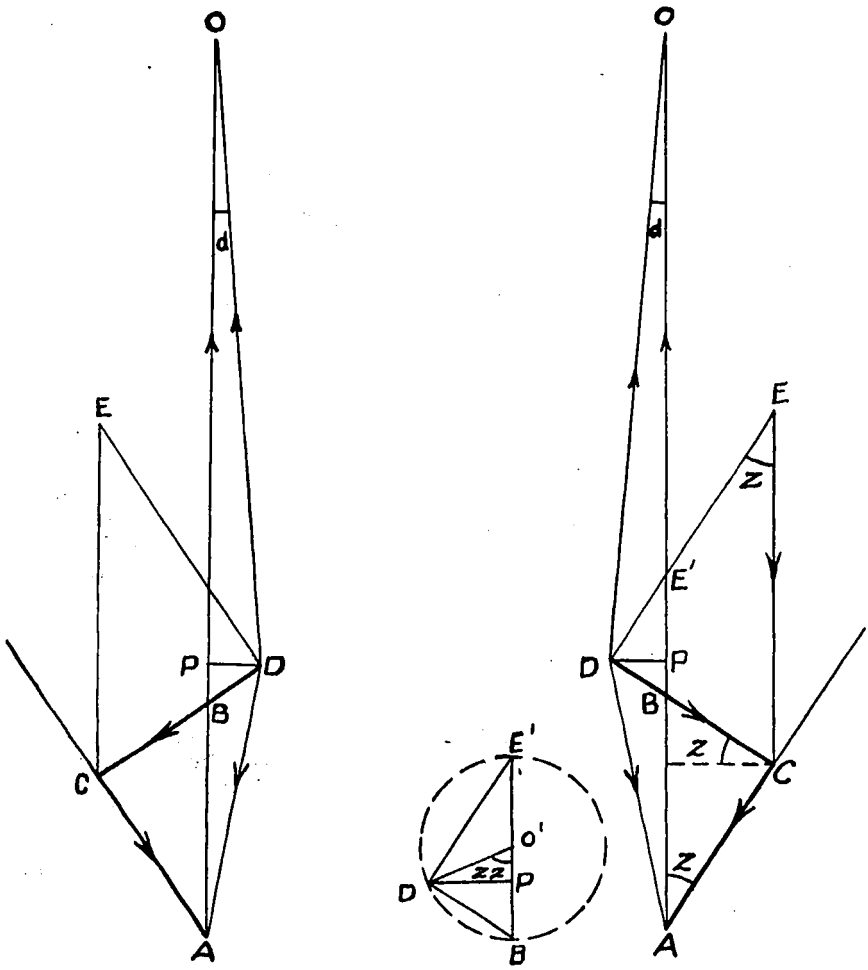

FIG. 19.—Force diagrams—tempory magnetism.

165 Taking a point O' midway between A and E', then $O'B = O'E' = \frac{1}{2}(CE - AB)$. Since in every case angle BDE' is a right angle, D must lie on a semicircle whose diameter is DE' (since an arc subtends half its angle). Then $DO' = BO'$. Further, since $PD = \frac{1}{2}(CE - AB) \sin 2Z$, angle $PO'D = 2Z$.

Since, therefore, D lies on the circumference of a circle whose diameter is the difference between AB and CE, it is only necessary to draw a single line in the magnetic meridian superimposing CE on AB.

Then locate O' and draw the circle and for any value of Z draw $O'D$, making an angle $2Z$ with the line $O'A$.

166. Deviation due to heeling.—So long as the ship remains upright and on even keel—that is, so long as the line through the compass center and the axis of the binnacle remains vertical—the forces that have been discussed are the only ones that cause deviation. Departure of the vessel from this position may be due to listing, rolling, or pitching, though the latter is less important, as the angular departure from the even keel is small. The case of a permanent list will be considered first.

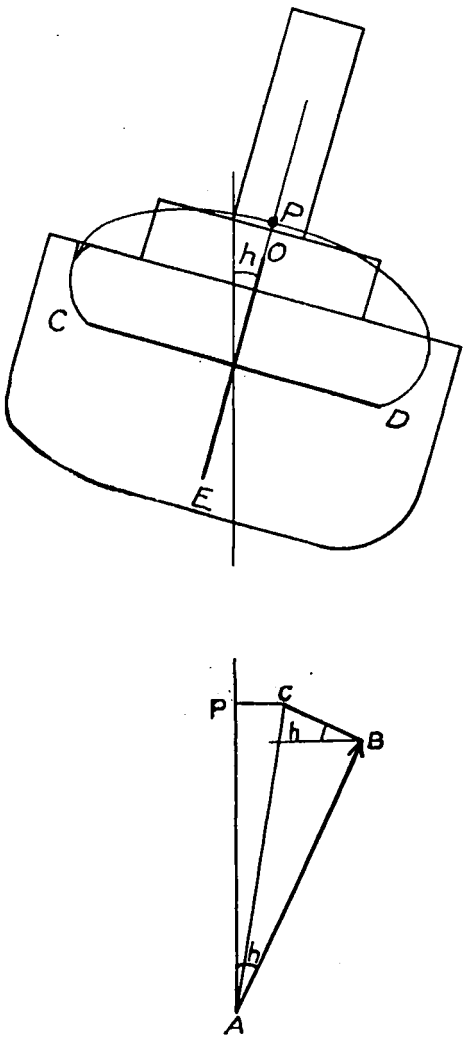

FIG. 20.—Heeling error diagrams.

167. Effect of heeling on six equivalent magnets.—The fields of the six magnets will be considered with reference to the vertical athwartship plane, instead of the horizontal plane. Of course, after the laws that govern the forces in this plane have been developed, it will be necessary to consider their horizontal components, as these only can act on the compass. The fore-and-aft line through the compass center which represents the force due to the fore-and-aft magnet moves parallel to itself as the ship rolls and remains horizontal, and therefore makes the same angle with the magnetic meridian. It accordingly causes no change in the deviation due to it. Further, in the case of the fore-and-aft temporary magnet there is no induction, because the lines of force are at right angles to the inducing field V.

168. The athwartship magnet and the vertical magnet each have a horizontal component when the vessel lists, which causes change in the deviation. For the temporary magnets the situation with regard to V induction is identical with that of the athwartship and fore-and-aft magnets for H induction, in this case the vertical magnet taking the place of the fore-and-aft.

In Figure 20 there is an athwartship force PC due to subpermanent magnetism. By analogy with paragraph 156.

$$PC = AB \sin h + BC \cos h.$$

In Figure 20, by analogy with paragraph 165, the force due to V induction varies as $\sin 2h$.

These forces are all in an athwartship direction, and they therefore cause no deviation on headings east or west, but do on every other course. The deviation is therefore semicircular.

In the cases of rolling the force causing deviation changes from plus to minus as the vessel rolls, and can therefore cause an oscillation of the compass that may become very inconvenient. The effect of pitching on the compass is analogous to that of rolling, but the magnets to be considered are the vertical and fore-and-aft.

PRINCIPLES OF COMPENSATION.

169. Compensation by opposing forces.—In so far as possible the compensation of the compass is accomplished by opposing the forces which cause deviation with forces which vary by the same laws as the ship changes heading. Forces which remain fixed in amount are opposed by similar forces and those which change with heading by forces changing in the same manner. If the so-called fixed forces remain fixed in one locality, but change with locality, an opposing force is selected which acts in the same manner. The case of a vessel upright in position and on even keel will be discussed before the effect of heeling is taken up.

170. Compensation by means of fixed forces.—Forces which remain unchanged with change of ship's heading are subpermanent magnetism and V induction. The latter force varies with change of region, while the former does not. Those changes in subpermanent magnetism (see pars. 141–143) which do not vary according to a fixed law of course can not be compensated and the compensation must be changed with any change in the forces.

171. Referring to paragraphs 30 to 47, the reason why compensation as described performs its purpose will be shown. On headings magnetic north and south and on magnetic east and west the effect of H induction is zero (see par. 116), and accordingly in each case the total induction is due to the combined effect of subpermanent magnetism and V induction. These forces being fixed, the respective components can be balanced by placing the vessel on these headings and in so far as possible removing the deviation.

172. Effect of compensating magnets.—With most binnacles groups of magnets are placed below the compass, so that their combined effect is that of a single magnet whose axis in intersected at its middle point by the vertical line through the compass center. The force at the compass center due to such a magnet is represented by a horizontal line parallel to its axis. (See fig. 8.)

173. The balancing of the force which causes deviation not only eliminates deviation but removes the force which is added to H for 180° and subtracted for 180°. (See fig. 18). Accordingly compensation by fixed magnets is beneficial even if only partial, as the deviations are more nearly equal on opposite headings.

174. Compensation by magnets insufficient.—Compensation of both subpermanent magnetism and V induction by magnets alone will be satisfactory only for the vessel which remains in a restricted

region. The change in V with change of locality necessarily changes the deviation. The best practice is therefore to balance the force due to the induction by means of a Flinders bar, so called from the name of the first mariner who suggested its use. This is a vertical soft iron bar so placed with regard to the compass that the horizontal component of its force at the compass center is equal and opposite to that due to the ship's vertical equivalent magnet. It should be noted that the vertical force at the compass center is increased by the presence of the Flinders bar, as its field is in the same direction as that of the ship.

175. Effect of Flinders bar.—The Flinders bar is described in paragraphs 40–44. It is so placed as to bring the compass center in the most effective part of its field. The explanation of increased effect of a longer bar without changing the position of its upper end is that the compass center is relatively nearer the pole of the bar, for a longer bar than for a shorter one. Without giving the laws that govern the force, this principle may be accepted.

176. On a north course the effect of the vertical induction in causing deviation is small, while it is a maximum on magnetic east or west. The derivation of the formula for separating the deviations into two parts on these headings will now be given. (See par. 47.)

177. Derivation of formula separating subpermanent magnetism from V induction.—Let x be the part of the total deviation on magnetic east or west due to subpermanent magnetism at the first station, and let H_1 and H_2 be the respective values of H at the two selected stations. Since x varies inversely with H, the corresponding part of the deviation at the second station will be $\frac{H_1}{H_2}x$. Designate $\frac{H_1}{H_2}$ by k; then we have x and kx to represent subpermanent magnetism. Let y, I_1, and I_2 in like manner represent the deviation due to V induction at the first station, and the dip at the two stations. Then, since y varies as tan I, the deviation due to V induction can be represented by y and $k'y$ where $k'=\frac{\tan I_2}{\tan I_1}$. Then, letting a and b represent the respective total deviations, $a=x+y$; $b=kx+k'y$. Solving $x=\frac{b-k'a}{k-k'}$ and $y=a-x$.

178. The terms containing x are to be compensated by magnets and those containing y by the Flinders bar.

Example of separating the deviation.—A vessel covering a wide range of latitude made observations at three widely separated stations. The third station was included to show the sort of agreement obtained. In the example, H at the first station is taken as 1.00 and the others are referred to it. It is now the practice to use the actual values of H as obtained from magnetic maps.

Station 1.—a	$=11°.1$	$H_1=1.00$	$\tan I_1=2.56$
2.—b	$=7°.3$	$H_2=1.71$	$\tan I_2=.30$
3.—b	$=7°.1$	$H_3=1.49$	$\tan I_3=1.92$

Stations 1 and 2:

$k=$	0.58	$x=15°.3$	$y=-4°.2$
$k'=$	.117	$kx=7°.6$	$k'y=-0°.3$

Stations 1 and 3:

$k =$	0.67	$x = 15°.2$	$y = -4°.1$
$k' =$	.75	$kx = 7°.0$	$k'y = -0°.1$

Such close agreement would not ordinarily be obtained. The values are given for a composite vessel, the only example available which gave results for such a wide range of locality.

In this case it would be obviously difficult to set a Flinders bar at station 2 or 3, but the data obtained at either station would make it possible to place it accurately elsewhere.

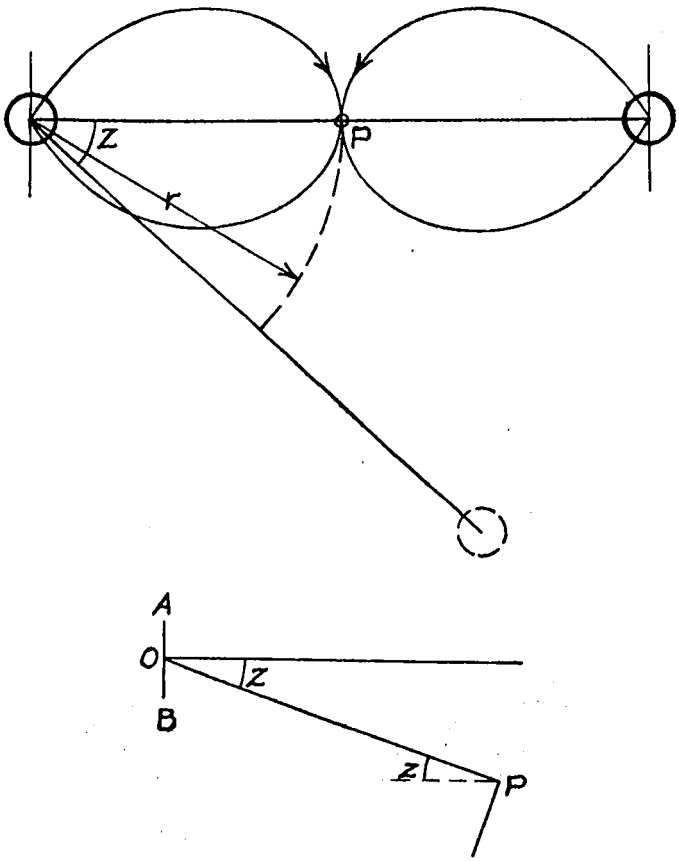

FIG. 21.—Effect of spheres in compensation.

179. How the spheres compensate the effect of H induction.—It will be demonstrated that the spheres correct the deviation due to the horizontal temporary magnets by causing a force at the compass center which varies as sin $2Z$.

As the spheres are set so that the line joining them is in the magnetic prime vertical when the ship heads in the magnetic meridian, the angle Z corresponding to ship's head measured from the magnetic meridian is the angle which the line joining the spheres makes with the magnetic prime vertical.

180. It is necessary to accept certain principles of physics to give the demonstration briefly. The magnetism of a sphere is equivalent to that of a small magnet at its center whose poles are very close together. It can be shown that at any point P (fig. 21) in the field of a small magnet there is a radial force and a tangential force.[2] The line PO, where O is a point midway between the poles of the magnet, makes an angle with the axis of the magnet. In the case of the sphere we are considering the angle Z measured at the center from a line at right angles to the axis of the magnet. The radial force is $\frac{(2M \sin Z)}{r^3}$ along OP, and the tangential force is $\frac{M \cos Z}{r^3}$ at right angles to OP. In this case the point P is the center of the compass, and as the distance from the center of the compass to the center of the sphere is fixed, $OP = r$, is constant. It is unnecessary to define M, which remains unchanged. The forces, therefore, vary only as $\sin Z$ and $\cos Z$ as the case may be.

We are concerned only with the components of these forces at right angles to the magnetic meridian. Their sum is $\frac{2M}{r^3} \sin Z \cos Z + \frac{M}{r^3} \cos Z \sin Z = \frac{3M}{2r^3} \sin 2Z$.

181. We then have a force varying as $\sin 2Z$, which if not balanced would cause a deviation. The expression for deviation would then be approximately $d = \frac{K \sin 2Z}{H - AP}$. (Disregarding the N–S component of the induction due to the sphere, which is small compared to H and to PB.) Note that $H - AP$ and not H represents the inducing field which acts on the sphere. It is evident that by placing spheres at a proper distance the quadrantal deviation on the ship can be compensated.

182. The position of the compass center with regard to the second sphere is diametrically opposite, and it is the same distance from the center as for the first sphere. The direction of the field is therefore exactly the same. The two spheres act together, and therefore smaller spheres can be used than if there were only one. (See fig. 21.)

183. Compensation of heeling error.—Compensation of heeling error can be only approximately correct. There is no way of determining the correct position of the vertical compensating magnet which corresponds to the methods that have previously been described. Further, there is no way of separating the parts due to subpermanent magnetism and those due to temporary magnetism. Compensation is made by the fixed magnet; accordingly, while the force at the compass center due to the fixed magnet can balance the force due to subpermanent magnetism when the vessel heels, it can not balance the force due to V induction, since it does not vary by the same law. Fortunately angles of list or roll are usually moderate. If, therefore, the compensation is reasonably close, there will be no appreciable heeling error.

184. Compensation for heeling error can be made by two methods: The first, that described in paragraph 38, is based on the effect due

[2] See J. A. Thomson's Elements of Electricity and Magnetism.

to the rolling of the vessel mentioned in paragraph 168. Another method is by the use of the heeling adjuster. This instrument, though not always available, provides a means of making compensation when the vessel is at rest, under which condition compensation is more satisfactory than when the vessel is rolling freely. The heeling adjuster is a weighted dip needle whose weight can be shifted in position, just as is done in keeping the land surveyor's compass needle horizontal There is provided a scale for showing the distances of the weight from the point of suspension of the needle; the instrument must be taken ashore, set up and leveled carefully, and placed in the magnetic meridian by means of a horizontal magnetic needle. The needle of the heeling adjuster is made horizontal by sliding the small adjusting weight to the proper position. The weight is then moved to a position where the reading of the scale is eight-tenths of the reading thus obtained. Next place the heeling adjuster in the binnacle with the compass removed, setting it in the magnetic meridian, which after the other compensation should correspond to compass north. Move the vertical magnet up or down until the needle is horizontal. The magnet should be secured in this position. Some publications advise that the magnet be lowered 2 inches after the above position has been determined on account of the interaction between the correctors. This is a matter that can better be determined in individual cases by observing the effectiveness of the compensation by the heeling adjuster method at the first opportunity when the vessel is rolling at sea.

REDUCTION OF DIRECTIVE FORCE.

185. Reduction of directive force.—It has been stated (par. 113) that a freely swinging magnet comes to rest in the direction of a force of fixed amount and direction. If it is disturbed from this position of rest, the restoring force may be said to vary with the force acting when the magnet is at rest. It is therefore important that the latter force, which may be called the directive force, is as large as possible.

186. The compass needle is not simply a device which points in a given direction, but its purpose is to establish the course of a moving vessel, and good performance under working conditions is of the highest importance. The motion of the vessel tends to swing the needle from its correct pointing and to make the compass card oscillate. To prevent too free oscillation, a liquid is used which has a damping effect. If there is insufficient directive force, the needle will return very slowly to its proper pointing and a new impulse may send it off again before it has had time to settle. Under such condition steering may be very difficult, and accurate steering, so essential with high speed, becomes impossible.

187. Referring to Figure 18, it is seen that AP is added to H through 180° and subtracted for the remaining headings. The mean value of AP for all headings is zero, and compensation tends to make it zero on all headings. In Figure 19 AP represents the force due to the ship's temporary field in the direction opposite to the earth's field. This is never zero and varies between AB and CE. The compensation does not affect this, since the magnetic field affecting the spheres is the same as for the compass.

188. Various values of directive force.—In ordinary cases the mean value of the directive force is about eight-tenths H. Under such conditions the compass performance is satisfactory.

189. There are cases where the directive forces become as low as $0.15H$. This occurs in conning towers and submarines. As this is a naval problem, it will simply be stated that this condition is due to shielding. In the interior of an iron or steel box the lines of force generally follow the sides of the box and there are comparatively few inside. Accordingly, the forces available for directing a compass in such a position are small. It might be asked, Why, if shielding is possible, the disturbing forces can not be kept from the compass by shielding? This is in part possible, but only by reducing the directive forces so that there is no gain.

UNCOMPENSATED DEVIATION.

190. If deviations are observed on various equidistant headings around the circle, it will be found that in general the mean compass error (difference between compass north and true north) will not be equal to the magnetic variation as given on the chart. This difference, which usually does not exceed a degree, can not be compensated. It is due to various causes. It may be shown that a certain unsymmetrical arrangement of soft iron near the compass can produce constant deviation. The occurrence of this distribution of material is not likely, and the difference is usually attributed to small errors in the compass or binnacle, errors in the azimuth circle or pelorus, lack of exact knowledge of the variation, and accumulated errors in steering or observation. If this error exceeds a degree, the compass and azimuth circle should be inspected. This uncompensated deviation is represented by factor A in compass analysis. (See par. 192.)

191. If soft iron is unsymmetrically placed with reference to the fore-and-aft vertical plane through the compass, the direction of the induction by H when the ship heads north may be slightly out of the magnetic meridian, or, to express it differently, the magnetic axis of the ship makes a slight angle with the fore-and-aft line. In this case there is a small quadrantal deviation which may be shown to vary as $\cos 2Z$. This is rarely compensated for. It is possible to compensate by placing the spheres so that a line joining them makes an angle with the athwartship line, but no provision is made for this on most binnacles. This uncompensated deviation is factor E mentioned in next paragraph.

ANALYSIS OF COMPASS DEVIATIONS

[Steamer *Surveyor;* date, April 19, 1919.]

Ship's head.	Deviation. (1) Right rudder.	Deviation. (1) Left rudder.	Deviation. (1) Mean.	Ship's head.	Deviation. (2) Right. rudder.	Deviation. (2) Left. rudder.	Deviation. (2) Mean.		(3) (1)+(2)
			′				′		′
0	.....	.....	−93	180	.....	.....	+74	*a*	−19
15	.....	.....	−67	195	.....	.....	+85	*b*	+18
30	.....	.....	−59	210	.....	.....	+55	*c*	−4
45	.....	.....	−18	225	.....	.....	+53	*d*	+35
60	.....	.....	+8	240	.....	.....	+58	*e*	+66
75	.....	.....	+27	255	.....	.....	−36	*f*	−9
90	.....	.....	+11	270	.....	.....	−70	*g*	−59
105	.....	.....	+25	285	.....	.....	−75	*h*	−50
120	.....	.....	+43	300	.....	.....	−106	*i*	−63
135	.....	.....	+54	315	.....	.....	−124	*k*	−70
150	.....	.....	+71	330	.....	.....	−108	*l*	−37
165	.....	.....	+77	345	.....	.....	−117	*m*	−40

(4) (1)−(2)	(5)	(4)×(5)	(6)	(4)×(6)	(7) From (3)	(8)	(7)×(8)	(9)	(7)×(9)
′		′	′	′	′		′		′
−167	0.000	0	1.000	−167	*a*−*g*				
−152	.259	−39	.966	−147	+40	0.000	0	1.000	+40
−114	.500	−57	.866	−99	*b*−*h*				
−71	.707	−50	.707	−50	+68	.500	+34	.866	+59
−50	.866	−43	.500	−25	*c*−*i*				
+63	.966	+61	.259	+16	+59	.866	+51	.500	+30
+81	1.000	+81	.000	0	*d*−*k*				
+100	.966	+97	−.259	−26	+105	1.000	+105	.000	0
+149	.866	+129	−.500	−74	*e*−*l*				
+178	.707	+126	−.707	−126	+103	.866	+89	−.500	−52
+179	.500	+90	−.866	−155	*f*−*m*				
+194	.259	+50	−.966	−187	+31	.500	+16	−.866	−27
	12B B	+445 +37	12C C	−1040 −87		12D D	+295 +30	12E E	+50 +4

N. B.—When observations are made on only 8 points the divisors must be changed from 12 to 4.

Analysis of compass deviations.

COMPARISON OF OBSERVED AND COMPUTED DEVIATIONS.

(Deviation$=A+B\sin Z+C\cos Z+D\sin 2Z+E\cos 2Z$.)

Z is the compass azimuth of the ship's heading, counting from north around by east, south, and west to 360°.

Ship's head.	−10	+37	−87	+30	+4	Deviation.		C−O	
	A	$B\sin Z$	$C\cos Z$	$D\sin 2Z$	$E\cos 2Z$	Comp'd	Obs'd	v	v^2
	′	′	′	′	′	′	′		
0	−10	0	−87	0	+4	−93	−93	0	0
15	−10	+10	−84	+15	+3	−66	−67	+1	1
30	−10	+18	−75	+26	+2	−39	−59	+20	400
45	−10	+26	−62	+30	0	−16	−18	+2	4
60	−10	+32	−44	+26	−2	+2	+8	−6	36
75	−10	+36	−23	+15	−3	+15	+27	−12	144
90	−10	+37	0	0	−4	+23	+11	+12	144
105	−10	+36	+23	−15	−3	+31	+25	+6	36
120	−10	+32	+44	−26	−2	+38	+43	−5	25
135	−10	+26	+62	−30	0	+48	+54	−6	36
150	−10	+18	+75	−26	+2	+59	+71	−12	144
165	−10	+10	+84	−15	+3	+72	+77	−5	25
180	−10	0	+87	0	+4	+81	+74	+7	49
195	−10	−10	+84	+15	+3	+82	+85	−3	9
210	−10	−18	+75	+26	+2	+75	+55	+20	400
225	−10	−26	+62	+30	0	+56	+53	+3	9
240	−10	−32	+44	+26	−2	+26	+58	−32	1,024
255	−10	−36	+23	+15	−3	−11	−36	+25	625
270	−10	−37	0	0	−4	−51	−70	+19	361
285	−10	−36	−23	−15	−3	−87	−75	−12	144
300	−10	−32	−44	−26	−2	−114	−106	−8	64
315	−10	−26	−62	−30	0	−128	−124	−4	16
330	−10	−18	−75	−26	+2	−127	−108	−19	361
345	−10	−10	−84	−15	+3	−116	−117	+1	1
								Σv^2	4,058

Probable error of single observation:
For 24 points, $r=\pm 0.151\sqrt{\Sigma v^2}=\pm 10'$.
For 8 points, $r=\pm 0.337\sqrt{\Sigma v^2}=\pm\ldots\ldots$

N. B.—The values of $\sin Z\ \cos Z$, $\sin 2Z$, and $\cos 2Z$ may be obtained from columns (5), (6), (8), and (9), having regard to change of sign with change of quadrant.

192. Method of analysis of deviations.—The method of analysis of deviations obtained by swinging ship is shown in examples. The uncompensated deviations A and E have been described in paragraphs 190 and 191, respectively. These are usually small. If A is large, the azimuth circle should at once be tested. If this is correct, further effort should be made to find the reason for the large value of A.

193. Other factors B, C, and D have a different relation to compensation. They are the means of the deviations of certain headings and are not forces, but for the purposes of the analysis may be considered as representating forces. While compensation is accurate enough for all needs of navigation, it is not exact. The additional computation required for getting the exact coefficients to replace B, C, and D, which are given in some publications, is not considered necessary.

194. B, before compensation, represents the fore-and-aft force due to subpermanent magnetism and V induction combined. After compensation it represents the difference between this force and that introduced by the fore-and-aft magnet and Flinders bar, if used.

195. C, in like manner before compensation, represents the athwartship force due to subpermanent magnetism. After compensation it represents the difference between this force and that introduced by the athwartship magnet.

196. D, before compensation, represents the forces designated by the expression $\frac{1}{2}(CE-AB)$, or one-half the difference between the forces due to H induction when the vessel is heading east and that when heading north. (See par. 165.)

197. B is approximately the deviation on magnetic east or magnetic west with the sign reversed, C is approximately the deviation on magnetic north or that on magnetic south with the sign reversed, and D is approximately one-half of the sum of deviations on northeast and southeast.

198. It is desirable to work out the probable error as given in the form. If large, lack of care in making observations is indicated.

199. Principles of analysis of the deviation.—If deviations are obtained without any compensating magnets in place at intervals, the history of changes in the ship's magnetism can be followed. Changes in B and C bring out variations in the ship's subpermanent magnetism, both in actual and relative amounts. Changes in D should ordinarily not be large. Determinations of D are of value in detecting subpermanent magnetism in the spheres, which can be removed as described in paragraph 75.

200. After compensating, the analysis is of value in indicating the relative effectiveness of the different parts of the compensation. In attempting to keep the deviations within a small amount is is essential to know whether any part of the compensation is less effective than it should be. After analysis has been made the preparation of a deviation table is easy, whether by computation or by graphic methods.

201. The navigator can demonstrate his efficiency by keeping his compass deviations to the smallest possible value as a foundation for his work in navigation. His compass work should, therefore, be a matter of permanent record. Tests of compasses, azimuth circles, and positions of compensating magnets should be carefully recorded. Unusual occurrences, such as stray currents, effect of lightning, etc., should be entered in the compass record as well as in the ship's log. The keeping of such careful records will prove an incentive to the maintenance of a proper standard of proficiency.

TABLE 1.—*Magnetic dip and horizontal intensity for 1923.*

No.	Places for which values are given. Latitude.	Longitude.	Nearest port or geographical feature.	*I*	*H*
	° *N.*	° *W.*		°	
1	45	67	Eastport, Me	74.6	0.155
2	44	69	Rockland, Me	74.1	.158
3	43	70	Portland, Me	73.6	.163
4	42	71	Boston, Mass	73.1	.169
5	41	70	Nantucket, Mass	72.2	.175
6	41	74	New York, N. Y	72.4	.175
7	39	75	Cape May, N. J	71.0	.188
8	37	76	Cape Henry, Va	69.4	.201
9	35	75	Cape Hatteras, N. C	67.6	.211
10	34	78	Wilmington, N. C	66.7	.221
11	32	81	Savannah, Ga	64.6	.237
12	30	81	St. Augustine, Fla	62.8	.247
13	27	80	Palm Beach, Fla	60.0	.263
14	24	82	Key West, Fla	56.1	.278
15	28	83	Tampa, Fla	60.4	.261
16	29	89	Port Eads, La	60.3	.267
17	29	95	Galveston, Tex	59.3	.272
18	28	97	Port Aransas, Tex	57.7	.279
19	26	97	Brownsville, Tex	55.3	.290
			Caribbean Sea and Gulf of Mexico.		
20	22	85	Cape San Antonio, Cuba	53.5	.291
21	18	83	Swan Island	48.5	.303
22	14	80	Roncador Bank	43.0	.308
23	10	80	Colon, Panama	36.0	.317
24	18	77	Kingston, Jamaica	50.0	.294
25	18	75	Navassa Island	50.4	.292
26	24	75	San Salvador, Bahama, Islands	57.2	.270
27	18	68	Mayaguez, P. R	51.0	.281
28	18	65	St. Thomas, Virgin Islands	51.5	.277
			Pacific Ocean.		
29	7	80	Puercos Point, Panama	33.0	.320
30	11	86	San Juan del Sur, Costa Rica	37.0	.326
31	14	91	San Jose de Guatemala	40.0	.327
32	17	100	Acapulco, Mexico	42.5	.324
33	19	105	Manzanillo, Mexico	44.8	.320
34	25	112	Magdalena, Mexico	51.0	.300
35	33	118	San Diego, Calif	58.5	.270
36	34	119	Los Angeles, Calif	59.3	.265
37	35	121	St. Luis Obispo, Calif	59.9	.261
38	37	122	Santa Cruz, Calif	61.5	.252
39	38	123	San Francisco, Calif	62.0	.248
40	39	124	Point Arena, Calif	62.7	.244
41	40	124	Point Delgado, Calif	63.6	.238
42	41	124	Eureka, Calif	64.4	.233
43	43	125	Cape Blanco, Oreg	65.8	.225
44	45	124	Newport, Oreg	67.8	.213
45	46	124	Astoria, Oreg	68.6	.206
46	47	124	Grays Harbor, Wash	69.6	.199
47	48	125	Cape Flattery, Wash	70.2	.194
48	48	123	Port Townsend, Wash	70.6	.190
49	47	122	Seattle, Wash	70.0	.196
50	49	123	Bellingham, Wash	71.4	.185
			(*Outside route*) *Cape Flattery* (*47*) *to Cross Sound* (*55*).		
51	50	128	Nootka Island, B. C	71.2	.187
52	54	134	Port Lewis, Queen Charlotte Islands, B. C	72.6	.170
53	55	134	Quadra Island, Alaska	73.3	.165
54	57	135	Sitka, Alaska	74.5	.155
55	58	137	Cross Sound, Alaska	74.7	.152
			(*Inside passage*) *Bellingham* (*50*) *to Cross Sound* (*55*) *and Skagway* (*64*).		
56	50	125	Cape Lazo, B. C	71.9	.183
57	51	128	Egg Island, Queen Charlotte Sound, B. C	72.0	.181
58	53	128	Swanson Bay, B. C	73.1	.169
59	54	131	Prince Rupert, B. C	73.2	.167
60	55	131	Ketchikan, Alaska	73.9	.161
61	56	132	Wrangell, Alaska	74.4	.156
62	57	133	Cleveland Passage, Alaska	74.9	.151
63	58	134	Juneau, Alaska	75.4	.147
64	59	135	Skagway, Alaska	75.8	.143

TABLE 1.—*Magnetic dip and horizontal intensity for 1923*—Continued.

No.	Places for which values are given.		Nearest port or geographical feature.	*I*	*H*
	Latitude.	Longitude.			
	° *N.*	° *W.*		°	
			Cross Sound (55) to Unimak Pass (69).		
65	59	140	Yakutat, Alaska	74.9	0.151
66	61	146	Cordova, Alaska	75.2	.147
67	61	151	Anchorage, Alaska	74.2	.154
68	58	156	Katmai, Alaska	70.9	.177
69	54	165	Unimak Pass, Alaska	66.8	.203
			Unimak Pass to Arctic.		
70	59	163	Kuskokwim, Alaska	70.8	.177
71	64	166	Nome, Alaska	74.3	.151
72	66	170	East Cape, Siberia	75.7	.142
73	68	167	Point Hope, Alaska	77.4	.125
74	72	156	Point Barrow, Alaska	81.0	.090
75	70	140	Demarcation Point, Alaska	81.7	.084
			Aleutian Islands.		
	N	*E*			
76	52	177	Kiska Island	63.5	.221
77	53	173	Attu Island	63.8	.219

TABLE 2.—*Period of oscillation for magnetic moment test of compass.*

[7½-inch Navy standard compass, standard mixture. Temperatures, Fahrenheit; H expressed in C. G. S. units.]

T_T \ H	.100	.150	.200	.250	.300	.350
	s.	*s.*	*s.*	*s.*	*s.*	*s.*
30 degrees	37	29	24	20	18	16
40 degrees	34	26	21	18	16	14
50 degrees	31	24	19	16	14	13
60 degrees	29	22	18	15	13	12
70 degrees	27	20	16	14	12	11
80 degrees	25	18	15	13	12	11
90 degrees	23	17	14	12	11	10