Guatemala

SECRETARIA DE AGRICULTURA
OBSERVATORIO NACIONAL
GUATEMALA, C. A.

OBSERVATORIO NACIONAL

Lat. Norte: 14° 35' 09.60"

Long. W.G.: 90° 32' 00.69"

Altura: 1494 mts.

QC
986
.G9
A53
no. 18
1945

ANALES
Nº 18
AÑO 1945

LIBRARY
JAN 2000
National Oceanic &
Atmospheric Administration
U.S. Dept. of Commerce

MINISTERIO DE AGRICULTURA

REPUBLICA DE GUATEMALA, C. A.

Enero 1946.

LIBRARY
JUL 11 1946
WEATHER BUREAU

National Oceanic and Atmospheric Administration

Environmental Data Rescue Program

ERRATA NOTICE

One or more conditions of the original document may affect the quality of the image, such as:

Discolored pages
Faded or light ink
Binding intrudes into the text

This document has been imaged through the NOAA Environmental Data Rescue Program. To view the original document, please contact the NOAA Central Library in Silver Spring, MD at (301) 713-2607 x124 or www.reference@nodc.noaa.gov.

Information Manufacturing Corporation
Imaging Subcontractor
Rocket Center, West Virginia
September 14, 1999

OBSERVATORIO NACIONAL METEOROLOGICO Y SISMOLOGICO

Dependencia del

MINISTERIO DE AGRICULTURA

REPUBLICA DE GUATEMALA, C. A.

***

A N A L E S

No.18

1 9 4 5

***

Ministro de Agricultura:

Sr. ROBERTO GUIROLA L.

Subsecretario de Agricultura:

Lic. SALVADOR SARAVIA.

Director del Observatorio Nacional:

Br. CLAUDIO URRUTIA E.

Primer Ayudante:

Br. JOSE VASSAUX P.

Segundo Ayudante:

Sr. ROBERTO HERR.

******

Contribuyendo a la obra divulgativa que el Gobierno de la República ha emprendido, el "OBSERVATORIO NACIONAL" tiene mucho gusto en presentar a continuación, los ANALES correspondientes al año de 1945.

Es así, como esta oficina dá a conocer por primera vez, en los últimos trece años, los datos recopilados con tanta paciencia y desvelos, esperando que ellos ayudarán para conocer mejor nuestras condiciones climatéricas, tan útiles en Aeronáutica, Agronomía, Salud Pública, Caminos, etc.

Esta publicación no está hecha para entretención del lector, pues componiéndose de sólo números, es tediosa, pero aquellos científicos, técnicos, agricultores de verdad que la reciban, encontrarán a través de sus páginas, el material necesario para sus consultas y, comparando las estadísticas que se irán publicando, se darán una idea de lo que son las condiciones meteorológicas de nuestro país.

Contamos actualmente con el Observatorio central en la Ciudad Capital y una oficina meteorológica de primer órden en la Ciudad de Quetzaltenango, además con 142 estaciones termo-pluviométricas y pluviométricas diseminadas en el territorio de la República. Esperamos para el futuro, lograr el establecimiento del servicio meteorológico, completando lo existente con una red de estaciones de primer órden, de acuerdo con la extensión territorial. Así también esperamos poder divulgar los conocimientos que se obtengan y cooperar con todas las instituciones científicas que con nuestros trabajos se beneficien.

Las solicitudes extranjeras nos han precisado a dar a conocer el presente trabajo y queremos poder condecender en todo, publicando sucesivamente los números anteriores.

Como puede verse, la carátula lleva el número 18, existiendo publicadas yá, los números 1, 2, 3 y 4, que corresponden a los años 1928, 29, 30 y 31, por consiguiente, faltan del número 5 al 17 inclusive, trece años sin fruto, pero que se salvarán con un poco de buena voluntad y trabajo.

Rogamos a las personas, instituciones y oficinas a quienes enviamos el presente trabajo, se sirvan acusarnos recibo de él, así mismo, si les interesa recibir los próximos números, se sirvan manifestarlo para dejarlos en la lista. También hemos de agradecer mucho el canje de publicaciones.

Guatemala, enero de 1946.

CLAUDIO URRUTIA E.
Director

AÑO 1945

RESUMEN ANUAL

TEMPERATURA en °C.:	
Media anual	17.9
Máxima, Mayo 3	30.3
Mínima, Diciembre 9	6.0
PRESION ATMOSFERICA reducida a Temperatura Standard:	
Media anual	640.2
Máxima, Enero 11	645.0
Mínima, Septiembre 29 y 30	634.3
HUMEDAD RELATIVA en %:	
Media anual	82
Mínima, Marzo 7 y diciembre 7	20
PUNTO DE ROCIO en °C.:	
Medio anual	14.5
TENSION DEL VAPOR DE AGUA DE LA ATMOSFERA en mm.:	
Medio anual	12.57
LLUVIA:	
Días con lluvia apreciable en el año	111
Días con lluvia inapreciable en el año	21
Cantidad registrada en el año en mm.....	1311.7
EVAPORACION EN LA SOMBRA en mm.:	
Total en el año	1680.7
VIENTO:	
Velocidad media anual en km/h	16.2
Velocidad máxima en km/h, Enero 31	56.0
Presión máxima en kg/m^2.....	29.5
Recorrido total de kilómetros en el año	140890.0
Dirección dominante en el año	NNE
TEMPERATURA DEL SUBSUELO en °C. y a 30 cms.:	
Media anual	20.5
INSOLACION:	
Total de horas y décimos en el año	2494.8
ESTADO DEL TIEMPO:	
Número de días nublados en el año	114
Número de días medio nublados en el año	176
Número de días despejados en el año	75

ENERO 1945

RESUMEN MENSUAL	
TEMPERATURA en °C.:	
Media	16.2
Máxima día 28	27.5
Mínima día 11	7.4
PRESION ATMOSFERICA reducida a Temperatura Standard:	
Media	641.0
Máxima día 11	645.0
Mínima día 14	637.6
HUMEDAD RELATIVA en %:	
Media	76
Mínima día 28	21
PUNTO DE ROCIO en °C.:	
Medio	11.6
TENSION DEL VAPOR DE AGUA DE LA ATMOSFERA en mm:	
Medio	10.33
LLUVIA:	
Días con lluvia apreciable	0
Días con lluvia inapreciable	1
Cantidad registrada en el mes en mm.	Inap.
EVAPORACION EN LA SOMBRA en mm.:	
Total en el mes	173.1
VIENTO:	
Velocidad media en km/h	19.9
Velocidad máxima en km/h día 31	56.0
Presión máxima en kg/m²	29.5
Recorrido total de kilómetros en el mes	14770.0
Dirección Dominante	NNE
TEMPERATURA DEL SUBSUELO en °C. y a 30 cms:	
Media	18.8
INSOLACION:	
Total de horas y décimos	254.3
ESTADO DEL TIEMPO:	
Número de días nublados	1
Número de días medio nublados	15
Número de días despejados	15

ENERO 1945

TEMPERATURA A LA SOMBRA EN °C.							
Días	7h.	13h.	19h.	Máxima	Mínima	Oscilación	Media
1	15.0	22.0	15.0	23.5	12.8	10.7	16.1
2	12.2	20.0	15.0	22.0	11.5	10.5	15.0
3	12.9	19.0	16.2	21.4	12.5	8.9	15.5
4	13.8	19.5	16.0	22.0	12.5	9.5	16.4
5	12.0	22.8	15.0	22.8	11.5	11.3	19.2
6	12.0	23.0	14.8	24.2	10.8	13.4	16.0
7	14.5	23.0	14.5	24.0	11.3	12.7	16.3
8	13.8	23.7	18.2	25.2	11.8	13.4	17.3
9	13.2	20.0	13.0	22.2	10.0	12.2	15.1
10	11.0	20.0	12.5	20.8	8.7	12.1	13.3
11	8.7	18.6	11.6	20.2	7.4	12.8	12.3
12	9.5	21.7	13.5	22.3	7.6	14.7	13.8
13	11.1	23.8	15.0	25.8	9.5	16.3	15.7
14	12.0	22.4	15.6	23.6	12.8	10.8	16.0
15	12.0	25.0	16.5	25.8	8.2	17.6	16.9
16	13.0	23.0	16.0	24.8	12.0	12.8	16.2
17	11.2	24.0	15.5	24.8	10.0	14.8	15.5
18	12.5	23.6	17.0	25.3	11.9	13.4	17.2
19	12.5	26.0	19.0	26.9	11.1	15.8	18.0
20	14.0	23.8	17.6	25.4	10.8	14.6	17.1
21	12.3	23.0	17.0	26.1	10.3	15.8	17.0
22	13.0	25.0	18.6	26.1	12.5	13.6	18.6
23	14.0	20.5	15.1	21.4	12.7	8.7	15.7
24	11.6	21.3	15.5	22.4	11.0	11.4	15.3
25	12.2	23.5	16.6	24.5	11.8	12.7	16.2
26	13.6	23.2	17.0	24.0	11.5	12.5	16.5
27	12.0	21.7	17.1	23.2	10.8	12.4	16.1
28	11.0	25.5	16.5	27.5	10.1	17.4	16.8
29	13.5	23.6	18.0	25.5	12.0	13.5	17.4
30	11.3	22.3	17.5	23.3	10.6	12.7	16.8
31	12.6	19.6	16.0	21.1	12.0	9.1	15.9
Máxima	15.0	26.0	19.0	27.5			
Mínima	8.7	18.6	11.6		7.4		
Oscil.	6.3	7.4	7.4			20.1	
Media	12.4	22.4	15.9				16.2

ENERO 1945

PRESION ATMOSFERICA REDUCIDA A TEMPERATURA STANDARD							
Días	7h.	13h.	19h.	Máxima	Mínima	Oscilación	Media
1	641.9	640.4	641.1	641.9	639.8	2.1	641.1
2	641.4	640.9	641.5	642.9	639.8	3.1	641.4
3	642.5	642.2	642.8	643.8	641.3	2.5	642.5
4	642.8	642.4	642.1	644.0	641.6	2.4	642.6
5	642.3	641.8	641.4	643.4	640.7	2.7	641.9
6	641.3	640.0	640.8	641.9	639.0	2.9	640.7
7	640.8	640.0	640.8	641.8	639.2	2.6	640.6
8	641.9	641.0	640.8	642.9	639.8	3.1	641.5
9	642.2	642.0	642.6	643.9	641.2	2.7	642.5
10	644.0	642.6	643.0	644.7	641.8	2.9	643.3
11	643.8	642.7	642.7	645.0	642.0	3.0	643.9
12	642.9	641.6	640.9	643.5	640.1	3.4	642.0
13	642.5	639.5	639.4	642.5	638.7	3.8	640.2
14	639.6	638.3	638.8	640.1	637.6	2.5	639.0
15	639.7	640.2	638.6	640.8	638.1	2.7	639.5
16	640.[illegible]	639.4	639.7	641.3	638.9	2.4	640.3
17	640.2	639.5	640.0	641.8	639.1	2.7	640.4
18	640.8	639.8	639.4	641.7	638.9	2.8	640.2
19	640.1	641.0	640.0	641.2	638.7	2.5	640.3
20	640.7	640.0	639.4	642.0	638.7	3.3	640.4
21	640.0	640.0	638.5	641.7	638.5	3.2	640.2
22	640.0	640.0	640.5	642.2	638.9	3.3	640.9
23	641.7	641.7	641.4	643.3	640.7	2.6	641.9
24	642.1	641.4	640.3	642.3	640.0	3.3	641.6
25	642.0	639.7	639.8	642.1	639.1	3.0	640.7
26	641.2	640.4	640.5	642.1	639.3	2.8	640.7
27	639.5	639.7	638.8	641.9	638.6	3.3	640.1
28	639.8	638.4	638.8	640.0	637.8	2.8	639.3
29	639.9	639.5	639.3	641.0	639.3	1.7	639.8
30	639.9	639.9	640.1	642.0	639.2	2.8	640.7
31	641.5	641.2	641.2	643.0	640.0	2.4	641.8
Máxima	644.0	642.7	643.0	645.0			
Mínima	639.5	638.3	638.5		637.6		
Oscil.	4.5	4.4	4.5			7.4	
Media	641.3	640.5	640.4				641.0

ENERO 1945

	HUMEDAD RELATIVA					PUNTO DE ROCIO	TENSION VAPOR
Días	7h.	13h.	19h.	Mínima	Media	Medio	Media
	%	%	%	%	%	°C.	mm.
1	95	61	92	56	88	14.3	12.20
2	93	54	90	48	82	11.7	10.29
3	96	66	89	56	84	13.1	11.27
4	90	71	91	64	85	13.6	11.72
5	84	57	81	57	74	11.7	10.35
6	90	49	94	44	80	12.1	10.60
7	95	54	95	49	81	13.5	11.62
8	92	52	73	41	75	13.0	11.24
9	92	62	72	55	76	11.0	9.93
10	71	47	60	41	72	7.2	7.61
11	83	47	84	47	78	7.3	7.73
12	91	37	90	34	74	8.9	8.60
13	90	41	95	34	74	11.2	10.05
14	89	47	84	45	80	11.3	9.74
15	84	47	86	31	72	12.2	10.72
16	95	51	73	46	78	11.9	10.42
17	100	43	90	43	81	11.9	10.47
18	97	45	80	40	77	12.1	10.63
19	100	32	67	28	68	11.1	10.01
20	95	37	69	33	71	11.2	10.05
21	97	48	82	29	72	12.4	10.81
22	99	44	71	44	76	12.6	10.99
23	97	59	85	58	78	12.8	11.08
24	94	56	76	46	79	11.4	10.12
25	98	51	77	46	75	12.4	10.83
26	94	49	70	49	76	12.1	10.55
27	93	45	65	43	69	10.2	9.35
28	96	34	86	21	73	11.0	9.95
29	93	51	63	34	69	12.0	10.53
30	98	51	74	50	75	11.8	10.75
31	90	63	69	58	77	11.2	10.01
Máxima	100	71	95				
Mínima	83	32	63	21			
Oscil.	17	39	32				
Media	92	50	80		76	11.6	10.33

ENERO 1945

	PRECIPITACION			EVAPORACION
Días	Cantidad	Duración	Intensidad	En la sombra
	mms.	Horas	mms/h.	mms.
1	0.0	0.0	0.0	3.9
2	0.0	0.0	0.0	5.5
3	0.0	0.0	0.0	4.6
4	0.0	0.0	0.0	4.2
5	Inap.	Inap.	Inap.	3.8
6	0.0	0.0	0.0	4.5
7	0.0	0.0	0.0	6.1
8	0.0	0.0	0.0	4.5
9	0.0	0.0	0.0	6.0
10	0.0	0.0	0.0	6.7
11	0.0	0.0	0.0	6.5
12	0.0	0.0	0.0	5.5
13	0.0	0.0	0.0	5.8
14	0.0	0.0	0.0	5.4
15	0.0	0.0	0.0	5.6
16	0.0	0.0	0.0	6.6
17	0.0	0.0	0.0	4.9
18	0.0	0.0	0.0	4.2
19	0.0	0.0	0.0	5.5
20	0.0	0.0	0.0	7.9
21	0.0	0.0	0.0	7.2
22	0.0	0.0	0.0	5.3
23	0.0	0.0	0.0	6.4
24	0.0	0.0	0.0	5.7
25	0.0	0.0	0.0	5.3
26	0.0	0.0	0.0	5.4
27	0.0	0.0	0.0	5.7
28	0.0	0.0	0.0	6.4
29	0.0	0.0	0.0	5.5
30	0.0	0.0	0.0	6.9
31	0.0	0.0	0.0	5.6
Total	Inap.	0.0		173.1

ENERO 1945

VIENTOS					
Días	Velocidad media	Velocidad máxima	Presión máxima	Recorrido total	Dirección dominante
	kms.	kms.	kg/m²	kms.	
1	27.5	42.0	16.5	660	NNE
2	30.4	38.0	13.6	730	NNE
3	26.2	32.0	9.6	630	NNE
4	26.2	32.0	9.6	630	NNE
5	29.4	47.0	21.0	705	NNE
6	14.2	30.0	8.8	340	NNE
7	14.4	37.0	12.8	345	NNE/SSW
8	14.2	28.0	7.4	340	NNE
9	27.5	41.0	15.8	660	NNE
10	30.0	38.0	13.6	720	NNE
11	28.7	34.0	10.9	690	NNE
12	18.8	29.0	7.9	450	NNE
13	9.2	29.0	7.9	220	NNE
14	11.5	30.0	8.5	275	SSW
15	10.6	20.0	3.8	255	SSW
16	17.9	26.0	6.4	430	NNE
17	9.2	24.0	5.4	220	NNE
18	7.1	29.0	7.9	170	SSW
19	15.0	26.0	6.4	360	NNE
20	16.7	34.0	10.9	400	NNE
21	12.1	24.0	5.4	290	NNE
22	16.7	24.0	5.4	405	NNE
23	29.4	42.0	16.6	705	NNE
24	25.4	36.0	12.2	610	NNE
25	17.9	28.0	7.4	430	NNE
26	22.1	36.0	12.2	530	NNE
27	21.7	38.0	13.6	520	NNE
28	10.6	27.0	6.9	255	NNE
29	19.6	29.0	7.9	470	NNE
30	21.9	35.0	11.5	525	NNE
31	33.3	56.0	29.5	800	NNE
Media	19.9				
Máxima		56.0			
Presión			29.5		
Total				14770	
Dominante					NNE

ENERO 1945

	TEMPERATURA DEL SUBSUELO A 30 cms. DE PROFUNDIDAD				INSOLACION	
Días	7h.	13h.	19h.	Media	Horas de sol	Fracción de insol.
	°C.	°C.	°C.	°C.	hs.	%
1	18.4	18.5	18.5	18.5	7.7	68
2	18.4	18.6	18.7	18.6	6.3	56
3	18.4	18.6	18.8	18.6	5.7	51
4	18.6	18.8	18.8	18.7	4.7	42
5	18.5	18.7	18.9	18.7	8.2	73
6	18.5	18.8	18.9	18.8	8.2	73
7	18.5	18.7	18.9	18.7	9.2	82
8	18.4	18.6	18.8	18.6	8.8	79
9	18.4	18.5	18.6	18.5	7.8	70
10	18.4	18.5	18.4	18.4	9.0	80
11	18.3	18.4	18.5	18.4	9.0	80
12	18.3	18.4	18.4	18.4	9.2	82
13	18.3	18.4	18.5	18.4	8.5	75
14	18.3	18.4	18.6	18.4	9.0	80
15	18.3	18.7	18.5	18.5	8.8	78
16	18.3	18.6	18.5	18.5	8.7	78
17	18.2	18.4	18.5	18.4	6.1	54
18	18.2	18.8	19.0	18.7	8.7	78
19	18.4	19.0	19.0	18.8	8.2	73
20	18.6	19.1	19.0	18.9	8.6	77
21	18.7	19.0	19.4	19.0	8.7	77
22	19.0	19.3	19.4	19.2	7.8	70
23	19.2	19.3	19.3	19.3	2.4	21
24	19.0	19.3	19.3	19.2	4.5	40
25	19.0	19.1	19.2	19.1	7.6	67
26	18.9	19.0	19.1	19.0	6.5	58
27	18.9	19.0	19.1	19.0	8.4	74
28	18.9	19.1	19.0	19.0	9.0	80
29	18.9	19.0	19.0	19.0	8.7	78
30	18.9	19.0	19.0	19.0	5.6	50
31	18.9	19.1	19.0	19.0	4.7	42
Máxima	19.2	19.3	19.4		9.2	82
Mínima	18.2	18.4	18.4		2.4	21
Oscil	1.0	.9	1.0			
Media	18.6	18.8	18.8	18.8	7.6	67
Total					234.3	

ENERO 1945

NEBULOSIDAD									
T.U. del Merid. 90 W					1200				
Días	N	GENERO DE NUBES						h_L	D_L
		N_L	C_L	N_M	C_M	N_H	C_H		
1	0.4	0.4	Cu.	0.0		0.0		1000	N.
2	0.6	0.2	Cu.	0.2	Ac.As	0.2	Ci.Cs	1000	N.
3	0.5	0.5	Cu.	0.0		0.0		1200	N.
4	0.6	0.6	Cu.	0.0		0.0		800	N.
5	0.4	0.4	Cu.	0.0		0.0		1200	N.
6	0.4	0.4	Cu.	0.0		0.0		1000	N.
7	0.0	0.0		0.0		0.0			
8	0.2	0.2	Cu.	0.0		0.0		1000	N.
9	0.8	0.8	Cu.Cunb.	0.0		0.0		800	N.
10	V	V	Cu.	0.0		0.0		1500	N.
11	0.0	0.0		0.0		0.0			
12	0.0	0.0		0.0		0.0			
13	0.6	0.6	Cu.	0.0		0.0		1200	N.
14	0.0	0.0		0.0		0.0			
15	0.4	0.4	Cu.	0.0		0.0		1000	N.
16	0.4	0.4	Cu.	0.0		0.0		1200	N.
17	0.2	0.2	Cu.	0.0		0.0		1000	N.
18	0.0	0.0		0.0		0.0			
19	0.2	0.2	Cu.	0.0		0.0		1000	N.
20	V	V	Fc.	0.0		0.0		1200	N.
21	0.0	0.0		0.0		0.0			
22	0.2	0.2	Cu.	0.0		0.0		1000	N.
23	0.5	0.5	Cu.Sc.	0.0		0.0		800	N.
24	0.5	0.5	Sc.	0.0		0.0		800	N.
25	0.7	0.7	Sc.Cu.	0.0		0.0		800	N.
26	0.4	0.4	Cu.	0.0		0.0		1000	N.
27	0.2	0.2	Fc.	0.0		0.0		1000	N.
28	0.2	0.2	Cu.	0.0		0.0		600	N.
29	0.3	0.3	Cu.Fc.	0.0		0.0		1000	N.
30	0.6	0.6	Cu.	0.0		0.0		800	N.
31	0.5	0.5	Cu.Sc.	0.0		0.0		800	N.

FEBRERO 1945

RESUMEN MENSUAL	
TEMPERATURA en °C.:	
Media	17.4
Máxima día 10, 13 y 17	27.0
Mínima día 13	9.2
PRESION ATMOSFERICA reducida a Temperatura Standard:	
Mdia	640.5
Máxima día 24	643.7
Mínima día 17	637.3
HUMEDAD RELATIVA en %:	
Media	74
Mínima día 22	27
PUNTO DE ROCIO en °C.:	
Medio	12.1
TENSION DEL VAPOR DE AGUA DE LA ATMOSFERA en mm:	
Medio	10.68
LLUVIA:	
Días con lluvia apreciable	0
Días con lluvia inapreciable	2
Cantidad registrada en el mes en mm	Inap.
EVAPORACION EN LA SOMBRA en mm.:	
Total en el mes	191.5
VIENTO:	
Velocidad media en km/h	18.7
Velocidad máxima en km/h día 23	54,0
Presión máxima en kg/m²	27.3
Recorrido total de kilómetros en el mes	12595.0
Dirección dominante	NNE
TEMPERATURA DEL SUBSUELO en °C. y a 30 cms:	
Media	19.4
INSOLACION:	
Total de horas y décimos	210.2
ESTADO DEL TIEMPO:	
Número de días nublados	0
Número de días medio nublados	16
Número de días despejados	12

FEBRERO 1945

TEMPERATURA A LA SOMBRA EN °C.							
Días	7h.	13h.	19h.	Máxima	Mínima	Oscilación	Media
1	13.0	20.7	15.0	22.9	12.3	10.6	15.8
2	12.5	19.5	18.0	21.7	10.3	11.4	15.3
3	13.5	23.0	17.1	25.0	13.0	12.0	17.5
4	13.9	23.5	16.3	25.2	12.9	12.3	17.4
5	14.2	24.6	18.0	26.5	13.5	13.0	18.5
6	13.5	24.0	18.7	25.2	12.6	12.6	17.9
7	13.5	24.0	19.0	26.0	12.5	13.5	17.6
8	13.1	23.1	17.5	24.5	10.5	14.0	16.6
9	13.0	23.2	16.2	25.8	12.0	13.8	17.2
10	11.4	25.0	16.0	27.0	10.1	16.9	16.8
11	11.9	25.2	16.8	26.8	10.7	16.1	16.8
12	10.7	23.5	15.9	24.4	9.9	14.5	16.3
13	10.4	25.4	16.4	27.0	9.2	17.8	16.8
14	13.0	23.6	17.2	26.2	10.9	15.3	17.2
15	13.5	23.5	18.0	25.0	10.6	14.4	17.1
16	13.0	22.0	17.2	25.3	11.0	14.3	16.9
17	14.5	24.5	17.5	27.0	12.7	14.3	18.1
18	14.5	24.2	18.5	25.5	14.0	11.5	18.3
19	14.0	22.0	18.4	24.0	13.0	11.0	17.1
20	12.4	23.0	17.5	25.2	11.5	13.7	17.5
21	14.0	23.5	17.2	25.7	10.7	15.0	17.7
22	13.4	25.2	19.1	26.5	12.5	14.0	18.8
23	15.0	21.8	17.0	24.3	12.8	11.5	17.7
24	13.4	21.9	16.0	23.0	11.5	11.5	20.9
25	13.3	20.5	16.5	23.2	12.5	10.7	16.0
26	11.5	23.5	18.5	25.2	10.5	14.7	17.6
27	14.0	24.2	17.5	25.2	13.2	12.0	17.8
28	14.2	25.2	18.7	26.2	12.6	13.6	18.2
..	....	....	....	....	....	....	....
..	....	....	....	....	....	....	....
..	....	....	....	....	....	....	....
Máxima	15.0	25.4	19.1	27.0			
Mínima	10.4	19.5	15.0		9.2		
Oscil.	4.6	5.9	4.1			17.8	
Media	12.4	23.3	17.4				17.4

FEBRERO 1945

PRESION ATMOSFERICA REDUCIDA A TEMPERATURA STANDARD							
Días	7h.	13h.	19h.	Máxima	Mínima	Oscilación	Media
1	642.3	642.6	642.6	643.5	641.0	2.5	642.3
2	642.8	641.5	641.2	642.6	641.0	2.6	642.2
3	642.2	640.9	641.3	642.9	639.7	3.2	641.6
4	642.2	641.2	640.8	642.8	640.0	2.8	641.4
5	641.5	640.6	640.2	642.1	639.3	2.8	640.8
6	641.8	640.0	640.4	642.8	639.7	3.1	641.1
7	641.8	640.0	641.0	642.8	639.8	3.0	641.3
8	642.0	641.2	640.5	642.9	639.8	3.1	641.3
9	640.2	639.0	638.8	641.2	637.8	3.4	639.8
10	640.3	639.2	639.9	640.9	637.8	3.1	639.5
11	639.9	639.2	638.8	640.4	637.9	2.5	639.2
12	639.0	639.2	638.8	640.1	637.8	2.3	639.2
13	639.8	639.1	638.8	641.5	637.8	3.7	639.3
14	640.3	640.0	639.7	641.4	638.7	2.7	640.1
15	641.1	640.4	639.8	641.8	638.9	2.9	640.5
16	640.6	640.0	639.0	641.2	638.0	3.2	639.6
17	639.6	638.7	639.3	640.0	637.3	2.7	638.9
18	639.7	639.7	639.1	640.7	638.2	2.5	639.5
19	641.3	641.1	640.5	642.4	639.8	2.6	640.8
20	641.3	640.0	639.2	641.8	638.4	3.4	640.2
21	639.7	639.5	639.0	640.3	637.8	2.5	639.3
22	640.4	640.2	640.0	642.1	639.0	3.1	640.4
23	642.1	641.8	641.8	643.3	640.8	2.5	642.1
24	642.6	642.2	641.4	643.7	640.9	2.8	642.4
25	641.4	641.3	640.5	642.1	640.1	2.0	641.3
26	640.6	640.0	639.6	641.5	638.6	2.9	640.3
27	640.5	639.7	640.7	641.0	638.7	2.3	640.0
28	641.2	640.9	640.5	642.2	639.5	2.7	640.8
..	.....	.....	.....	.....	.....	...	.....
..	.....	.....	.....	.....	.....	...	.....
..	.....	.....	.....	.....	.....	...	.....
Máxima	642.8	642.6	642.6	643.7			
Mínima	639.0	638.7	638.8		637.3		
Oscil.	3.2	3.9	3.8			6.4	
Media	641.0	640.4	640.1				640.5

FEBRERO 1945

	HUMEDAD RELATIVA					PUNTO DE ROCIO	TENSION VAPOR
Días	7h.	13h.	19h.	Mínima	Media	Medio	Media
	%	%	%	%	%	°C.	mm.
1	93	50	64	47	74	10.0	9.24
2	95	59	74	52	75	12.1	10.61
3	90	53	61	47	73	11.4	10.18
4	91	59	80	46	74	13.5	11.59
5	84	45	94	40	73	11.1	11.75
6	95	41	64	37	73	11.5	10.19
7	96	46	59	40	71	11.8	10.37
8	79	41	64	41	65	9.8	9.11
9	95	38	89	37	76	11.5	10.33
10	89	36	95	34	80	11.2	10.18
11	96	40	93	36	79	12.6	11.00
12	98	39	96	45	81	11.5	10.34
13	96	38	92	36	76	11.6	10.40
14	97	59	85	42	75	14.0	12.07
15	95	44	60	40	72	11.1	9.94
16	93	46	84	41	77	12.1	10.65
17	90	49	86	40	78	13.8	11.83
18	93	38	60	30	70	11.1	9.96
19	92	59	60	38	77	12.3	10.77
20	96	50	95	40	74	13.6	11.78
21	95	51	86	41	79	13.8	11.87
22	98	39	70	27	68	12.3	10.76
23	86	54	67	49	77	11.9	10.16
24	92	53	72	47	73	11.7	10.31
25	87	58	78	47	75	11.9	10.41
26	99	42	71	38	70	11.4	10.14
27	94	50	89	39	79	14.0	12.04
28	95	50	61	37	70	13.3	11.18
..	..	..	..	..	..	....	.....
..	..	..	..	..	..	....	.....
..	..	..	..	..	..	....	.....
Máxima	99	59	93				
Mínima	84	36	59	27			
Oscil.	15	23	34				
Media	93	47	77		74	12.1	10.68

FEBRERO 1945

PRECIPITACION				EVAPORACION
Días	Cantidad	Duración	Intensidad	En la sombra
	mms.	Horas	mms/h.	mms.
1	0.0	0.0	0.0	6.4
2	0.0	0.0	0.0	6.7
3	0.0	0.0	0.0	6.0
4	0.0	0.0	0.0	7.8
5	0.0	0.0	0.0	5.5
6	0.0	0.0	0.0	6.0
7	0.0	0.0	0.0	8.4
8	0.0	0.0	0.0	8.3
9	0.0	0.0	0.0	10.1
10	0.0	0.0	0.0	7.1
11	0.0	0.0	0.0	6.1
12	0.0	0.0	0.0	5.5
13	0.0	0.0	0.0	6.7
14	0.0	0.0	0.0	6.4
15	0.0	0.0	0.0	6.5
16	0.0	0.0	0.0	7.7
17	0.0	0.0	0.0	5.7
18	0.0	0.0	0.0	5.5
19	0.0	0.0	0.0	8.3
20	Inap.	Inap.	Inap.	6.9
21	0.0	0.0	0.0	6.4
22	0.0	0.0	0.0	6.6
23	Inap.	Inap.	Inap.	8.3
24	0.0	0.0	0.0	7.2
25	0.0	0.0	0.0	7.1
26	0.0	0.0	0.0	6.2
27	0.0	0.0	0.0	7.1
28	0.0	0.0	0.0	5.0
..	...	...	...	...
..	...	...	...	...
..	...	...	...	...
Total	Inap.	0.0		191.5

FEBRERO 1945

VIENTOS					
Días	Velocidad media	Velocidad máxima	Presión máxima	Recorrido total	Dirección dominante
	kms.	kms.	kg/m²	kms.	
1	28.6	40.0	15.0	685	NNE
2	23.6	34.0	10.9	570	N
3	24.8	32.0	9.6	595	NNE
4	16.5	20.0	3.8	395	NNE
5	11.7	27.0	6.9	280	NNE
6	23.8	44.0	18.2	570	NNE
7	23.1	36.0	12.2	555	NNE
8	31.4	48.0	21.7	755	NNE
9	19.8	28.0	7.4	475	NNE
10	10.0	29.0	6.9	240	SSW
11	8.8	29.0	6.9	210	SSW
12	12.7	28.0	7.4	305	SSW
13	8.1	21.0	4.3	195	SSW
14	12.9	19.0	3.4	310	NNE
15	20.4	29.0	7.9	490	NNE
16	15.7	21.0	4.3	375	NNE/SSW
17	12.7	21.0	4.3	305	NNE
18	23.4	31.0	9.0	560	NNE
19	25.2	36.0	12.2	630	NNE
20	16.9	31.0	9.0	405	NNE
21	13.7	30.0	8.5	330	NNE/SSW
22	10.4	23.0	5.0	250	NNE
23	31.2	54.0	27.3	750	NNE
24	28.1	35.0	11.5	675	NNE
25	27.7	34.0	10.9	665	NNE
26	16.1	28.0	7.4	385	NNE
27	6.9	18.0	2.9	165	NNE
28	19.6	30.0	8.5	470	NNE
..	....	....	....	...	...
..	....	....	....	...	...
..	....	....	....	...	...
Media	18.7				
Máxima		54.0			
Presión			27.3		
Total				12595	
Dominante					NNE

FEBRERO 1945

	TEMPERATURA DEL SUBSUELO A 30 cms. DE PROFUNDIDAD				INSOLACION	
Días	7h.	13h.	19h.	Media	Horas de sol	Fracción de insol.
	°C.	°C.	°C.	°C.	hs.	%
1	19.0	19.1	19.1	19.1	4.2	36
2	18.9	19.1	19.1	19.0	6.4	56
3	18.9	19.0	19.1	19.0	8.5	74
4	19.0	19.2	19.1	19.1	6.1	53
5	19.0	19.1	19.1	19.1	8.0	70
6	18.9	19.1	18.7	18.9	8.9	77
7	18.9	19.1	19.1	19.0	9.1	79
8	18.9	19.4	19.5	19.3	9.5	83
9	18.9	19.3	19.4	19.2	8.5	74
10	18.8	19.5	19.5	19.3	8.8	75
11	18.9	19.3	19.5	19.2	7.0	50
12	18.8	19.3	19.5	19.2	8.7	75
13	19.0	19.3	19.5	19.3	9.0	78
14	19.1	19.4	19.6	19.4	6.3	54
15	19.2	19.5	19.6	19.4	8.0	69
16	19.3	19.5	19.7	19.5	6.3	54
17	19.4	19.6	19.7	19.6	7.0	60
18	19.3	19.5	19.6	19.5	8.5	70
19	19.3	19.5	19.6	19.5	8.0	68
20	19.4	19.6	19.7	19.6	8.1	69
21	19.4	19.6	19.6	19.5	8.0	68
22	19.3	19.5	19.8	19.5	8.4	75
23	19.4	19.7	19.9	19.7	6.2	52
24	19.5	19.7	19.9	19.7	6.8	58
25	19.5	19.6	19.8	19.6	6.3	54
26	19.5	19.7	19.8	19.7	7.8	67
27	19.5	19.7	19.9	19.7	3.8	31
28	19.6	19.7	19.9	19.7	8.0	68
..	....	....	....	....	...	..
..	....	....	....	....	...	..
..	....	....	....	....	...	..
Máxima	19.6	19.7	19.9	19.7	9.5	83
Mínima	18.8	19.0	18.7	18.9	3.8	31
Oscil.	.8	.7	1.2	.8		
Media	19.2	19.4	19.5	19.4	7.5	64
Total					210.2	

FEBRERO 1945

NEBULOSIDAD									
T.U. del Merid. 90 W					1200				
Días	N	GENERO DE NUBES						h_L	D_L
		N_L	C_L	N_M	C_M	N_H	C_H		
1	0.6	0.6	Cu.	0.0		0.0		800	N.
2	0.7	0.7	Cu.Co.	0.0		0.0		1200	N.
3	0.4	0.4	Cu.	0.0		0.0		800	N.
4	0.5	0.5	Cu.Sc.	0.0		0.0		1000	N.
5	0.6	0.6	Cu.	0.0	Sc.	0.0		1200	N.
6	0.4	0.4	Cu.	0.0		0.0		1000	N.
7	0.3	0.3	Cu.	0.0		0.0		1000	N.
8	0.2	0.2	Cu.	0.0		0.0		1500	N.
9	V	V	Cu.	0.0		0.0		1000	N.
10	0.1	0.1	Cu.	0.0		0.0		1500	N.
11	0.2	0.2	Cu.	0.0		0.0		1000	N.
12	V	V	Fc.	0.0		0.0		1500	S.
13	V	V	Cu.	0.0		0.0		800	S.
14	0.5	0.5	Sc.	0.0		0.0		1800	N.
15	0.4	0.4	Cu.Sc.	0.0		0.0		1200	N.
16	0.3	0.3	Cu.	0.0		0.0	Ci.	1000	N.
17	0.5	0.5	Cu.	0.0	Sc.	0.0		1200	N.
18	0.3	0.3	Cu.	0.0		0.0		1800	N.
19	0.5	0.5	Sc.Cu.	0.0		0.0		400	N.
20	0.4	0.4	Cu.	0.0		0.0		1500	N.
21	0.4	0.4	Cu.	0.0		0.0		1500	N.
22	0.4	0.4	Cu.	0.0		0.0		1200	N.
23	0.4	0.4	Cu.	0.0		0.0		1500	N.
24	0.5	0.5	Cu.	0.0		0.0		1500	N.
25	0.5	0.5	Cu.	0.0		0.0		1800	N.
26	0.4	0.4	Cu.	0.0		0.0		1800	N.
27	0.3	0.3	Cu.	0.0		0.0		1500	N.
28	0.4	0.4	Cu.	0.0		0.0		1200	N.
..	...	...	...	...		...		....	..
..	...	...	...	...		...		....	..
..	...	...	...	...		...		....	..

RESUMEN MENSUAL

TEMPERATURA en °C.:	
Media	18.3
Máxima día 15	29.4
Mínima día 12	10.9
PRESION ATMOSFERICA reducida a Temperatura Standard:	
Media	640.0
Máxima día 10	643.1
Mínima día 31	636.7
HUMEDAD RELATIVA en %:	
Media	77
Mínima día 7	20
PUNTO DE ROCIO en °C.:	
Medio	13.7
TENSION DEL VAPOR DE AGUA DE LA ATMOSFERA en mm:	
Medio	11.92
LLUVIA:	
Días con lluvia apreciable	4
Días con lluvia inapreciable	1
Cantidad registrada en el mes en mm	52.9
EVAPORACION EN LA SOMBRA en mm.:	
Total en el mes	188.8
VIENTO:	
Velocidad media en km/h	17.0
Velocidad máxima en km/h día 24	50.0
Presion máxima en kg/m^2	23.5
Recorrido total de kilómetros en el mes	12090.0
Dirección dominante	NNE
TEMPERATURA DEL SUBSUELO en °C. y a 30 cms:	
Media	20.3
INSOLACION:	
Total de horas y décimos	230.9
ESTADO DEL TIEMPO:	
Número de días nublados	5
Número de días medio nublados	15
Número de días despejados	11

MARZO 1945

TEMPERATURA A LA SOMBRA EN °C.							
Días	7h.	13h.	19h.	Máxima	Mínima	Oscilación	Media
1	14.4	23.2	18.2	25.2	12.5	12.7	17.6
2	12.7	24.5	19.0	26.0	11.2	14.8	17.9
3	15.6	25.5	18.0	27.0	14.0	13.0	18.8
4	13.8	26.6	17.3	27.9	12.8	15.1	18.3
5	15.5	28.0	17.5	29.0	14.5	14.5	18.5
6	16.0	25.4	17.5	26.8	13.8	13.0	18.6
7	13.0	26.5	19.2	28.5	11.4	17.1	18.3
8	14.0	22.0	18.0	25.6	11.9	13.7	17.3
9	14.2	23.0	17.6	24.6	13.1	11.5	17.3
10	13.2	22.8	16.0	24.6	12.0	12.6	16.6
11	14.6	21.1	15.7	22.7	11.4	11.3	16.1
12	13.5	22.9	19.0	25.5	10.9	14.6	17.6
13	14.5	26.2	19.8	27.8	13.0	14.8	19.0
14	15.5	24.5	17.8	27.2	14.6	12.6	17.9
15	16.5	28.2	18.3	29.4	15.3	14.1	20.2
16	16.6	20.0	17.8	26.6	15.2	11.4	18.1
17	15.0	25.0	19.5	26.7	13.5	13.2	18.8
18	14.0	24.5	20.0	26.2	13.4	12.8	18.7
19	14.7	26.5	18.8	27.8	14.5	13.3	19.2
20	15.5	25.2	18.0	26.0	14.5	11.5	19.0
21	15.3	20.2	15.9	21.8	13.4	8.4	15.7
22	13.2	21.2	17.8	23.4	11.5	11.9	16.7
23	13.8	24.8	17.9	25.9	12.5	13.4	17.7
24	15.2	24.3	16.2	25.0	13.6	11.4	18.1
25	15.2	24.5	17.8	25.6	13.7	11.9	19.0
26	17.8	26.8	18.4	28.5	16.5	12.0	20.5
27	17.0	28.2	21.7	29.2	16.0	13.2	20.8
28	15.6	27.6	18.6	28.8	14.5	14.3	19.5
29	15.5	24.4	17.3	26.0	13.6	12.4	18.5
30	17.5	23.8	17.0	24.6	14.8	9.8	18.6
31	15.3	24.6	17.4	25.8	15.2	10.6	18.7
Máxima	17.8	28.2	21.7	29.4			
Mínima	12.7	20.0	15.7		10.9		
Oscil.	5.1	8.2	6.0			18.5	
Media	15.0	24.6	19.6				18.3

MARZO 1945

PRESION ATMOSFERICA REDUCIDA A TEMPERATURA STANDARD							
Días	7h.	13h.	19h.	Máxima	Mínima	Oscilación	Media
1	641.8	641.0	640.6	642.7	639.6	3.1	641.1
2	641.3	640.0	639.8	641.3	639.0	2.3	640.6
3	641.0	639.9	640.3	641.0	638.5	2.5	640.1
4	640.9	639.6	639.5	641.1	638.0	3.1	639.8
5	640.4	639.6	639.9	641.0	638.5	2.5	639.9
6	640.2	639.4	639.8	640.8	638.2	2.6	639.8
7	640.4	639.8	640.2	641.7	638.5	3.2	640.2
8	641.0	640.8	640.7	642.0	639.3	2.7	640.9
9	641.3	641.0	640.7	642.8	639.8	3.0	641.1
10	641.5	640.6	640.4	643.1	639.0	3.5	640.9
11	641.1	640.5	640.0	641.7	638.0	3.1	640.0
12	640.5	640.0	639.4	641.3	638.4	2.9	640.0
13	640.2	639.4	638.7	641.1	637.7	3.4	639.6
14	640.0	639.2	638.9	641.1	638.3	2.8	639.4
15	640.3	639.1	638.7	640.8	637.8	3.0	639.5
16	641.8	639.5	639.3	641.8	638.5	3.3	639.8
17	640.8	639.8	639.1	641.3	638.1	3.2	639.8
18	640.6	640.1	639.4	641.1	637.7	3.4	640.1
19	640.7	639.4	639.3	641.0	638.3	2.7	639.8
20	640.8	639.6	640.1	641.2	638.6	2.6	640.0
21	641.0	641.0	641.1	642.5	639.9	2.6	641.2
22	642.0	641.3	640.3	642.9	639.8	3.1	641.4
23	641.4	640.0	639.8	641.7	638.8	2.9	640.5
24	641.0	640.0	639.8	641.1	639.0	2.1	640.2
25	640.4	639.7	639.5	641.0	638.5	2.5	639.8
26	640.1	639.2	639.2	640.5	637.7	2.8	639.3
27	639.5	638.2	639.8	640.5	637.3	3.2	639.1
28	640.0	639.0	639.2	640.8	637.3	3.5	639.3
29	640.4	639.5	639.0	640.9	637.9	3.0	639.6
30	639.3	639.1	638.5	640.3	637.5	2.8	638.8
31	638.6	638.2	637.9	640.4	636.7	3.7	638.1
Máxima	642.0	641.3	641.1	643.1			
Mínima	638.6	638.2	637.9		636.7		
Oscil.	3.4	3.1	3.2			6.4	
Media	640.7	639.8	639.6				640.0

MARZO 1945

	HUMEDAD RELATIVA					PUNTO DE ROCIO	TENSION VAPOR
Días	7h.	13h.	19h.	Mínima	Media	Medio	Media
	%	%	%	%	%	°C.	mm.
1	92	55	50	34	70	11.4	10.29
2	93	46	75	41	73	13.7	11.11
3	92	45	91	39	77	14.5	12.43
4	93	39	88	29	78	13.1	11.57
5	91	39	86	36	80	14.1	12.05
6	90	43	92	38	82	14.2	12.20
7	98	38	63	20	67	12.0	10.48
8	92	53	66	34	72	12.1	10.57
9	92	48	52	37	72	10.7	9.75
10	95	45	61	39	71	10.5	9.54
11	90	48	74	46	74	11.2	10.02
12	85	54	64	41	71	12.1	10.57
13	90	50	66	37	75	13.7	11.79
14	95	49	92	45	83	14.8	12.70
15	95	39	88	28	76	15.0	12.84
16	95	54	91	50	88	14.3	12.29
17	97	38	72	33	70	12.9	11.25
18	95	45	54	42	71	11.5	10.38
19	96	40	96	43	82	15.3	13.16
20	95	50	77	47	77	14.8	12.66
21	97	51	87	58	82	12.8	11.18
22	92	53	76	49	75	12.2	10.70
23	97	51	90	44	81	14.5	12.38
24	95	50	96	49	82	15.0	12.80
25	96	48	93	43	79	14.7	12.57
26	92	61	96	46	83	17.6	15.15
27	94	49	72	40	79	16.3	13.85
28	97	45	95	36	80	15.6	13.41
29	95	62	95	54	84	16.0	13.64
30	87	59	95	53	82	15.6	13.30
31	95	53	96	53	83	13.3	13.06
Máxima	98	62	96				
Mínima	85	38	50	20			
Oscil.	13	24	46				
Media	93	49	77		77	13.7	11.92

MARZO 1945

	PRECIPITACION			EVAPORACION
Días	Cantidad	duración	Intensidad	En la sombra
	mms.	Horas	mms/h.	mms.
1	0.0	0.0	0.0	5.0
2	0.0	0.0	0.0	6.2
3	0.0	0.0	0.0	6.2
4	0.0	0.0	0.0	6.0
5	0.0	0.0	0.0	5.7
6	23.8	0.8	29.8	4.9
7	0.0	0.0	0.0	4.8
8	0.0	0.0	0.0	8.2
9	0.0	0.0	0.0	7.7
10	0.0	0.0	0.0	8.6
11	0.0	0.0	0.0	8.9
12	0.0	0.0	0.0	7.7
13	0.0	0.0	0.0	7.4
14	0.0	0.0	0.0	6.2
15	0.0	0.0	0.0	4.5
16	0.0	0.0	0.0	7.5
17	24.1	3.2	7.5	3.4
18	0.0	0.0	0.0	7.1
19	0.0	0.0	0.0	7.0
20	0.0	0.0	0.0	4.7
21	1.0	1.7	0.6	5.7
22	4.0	2.2	1.8	3.8
23	0.0	0.0	0.0	6.3
24	0.0	0.0	0.0	5.6
25	0.0	0.0	0.0	6.0
26	0.0	0.0	0.0	6.5
27	Inap.	Inap.	Inap.	5.4
28	0.0	0.0	0.0	6.0
29	0.0	0.0	0.0	5.3
30	0.0	0.0	0.0	4.8
31	0.0	0.0	0.0	5.7
Total	52.9	7.9		188.8

MARZO 1945

VIENTOS					
Días	Velocidad media	Velocidad máxima	Presión máxima	Recorrido total	Dirección dominante
	kms.	kms.	kg/m²	kms.	
1	27.0	37.0	12.8	650	NNE
2	18.7	29.0	7.9	400	NNE
3	11.9	20.0	3.8	285	NNE/SSW
4	12.5	18.0	2.9	300	NNE/SSW
5	6.9	16.0	2.4	165	NNE/SSW
6	8.6	22.0	4.6	205	NNE/SSW
7	15.4	26.0	6.4	370	NNE/SSW
8	18.4	27.0	6.9	440	NNE
9	30.6	48.0	21.7	735	NNE
10	30.0	44.0	18.2	720	NNE
11	----	----	----	---	NNE
12	18.7	30.0	8.5	455	NNE
13	15.8	21.0	4.3	380	NNE
14	11.0	24.0	5.4	265	NNE/SSW
15	9.6	30.0	8.5	230	SSW
16	14.8	21.0	4.3	260	NNE
17	17.7	27.0	6.9	425	NNE
18	17.1	26.0	6.4	410	NNE
19	11.7	22.0	4.6	280	NNE
20	12.5	28.0	7.4	300	NNE
21	27.7	48.0	21.7	665	NNE
22	24.0	29.0	7.9	590	NNE/SSW
23	17.1	31.0	9.0	410	SSW
24	20.0	50.0	23.5	480	NNE/SSW
25	20.2	40.0	15.0	510	NNE
26	9.6	22.0	4.6	230	NNE/SSW
27	14.0	19.0	3.4	350	NNE
28	12.7	20.0	3.8	305	NNE/SSW
29	13.5	30.0	8.5	325	SSW
30	21.3	31.0	9.0	510	SSW
31	18.3	42.0	16.6	440	SSW
Media	17.0				
Máxima		50.0			
Presión			23.5		
Total				12090	
Dominante					NNE

MARZO 1945

	TEMPERATURA DEL SUBSUELO A 30 cms. DE PROFUNDIDAD				INSOLACION	
Días	7h.	13h.	19h.	Media	Horas de sol	Fracción de insol.
	°C.	°C.	°C.	°C.	hs.	%
1	19.6	19.8	19.9	19.8	9.0	76
2	19.6	19.7	19.9	19.7	4.6	39
3	19.6	19.9	20.2	19.9	7.4	63
4	19.6	19.9	20.2	19.9	5.5	47
5	19.8	20.2	20.4	20.1	5.7	48
6	19.9	20.3	20.5	20.2	7.2	61
7	20.0	20.3	20.5	20.3	7.2	61
8	20.0	20.3	20.5	20.3	6.8	58
9	20.1	20.3	20.5	20.3	9.0	76
10	20.0	20.2	20.4	20.2	10.5	89
11	20.0	20.2	20.4	20.2	10.5	89
12	19.9	20.4	20.6	20.3	10.0	83
13	19.9	20.2	20.5	20.2	8.8	74
14	19.9	20.2	20.4	20.2	4.0	34
15	20.0	20.4	20.6	20.3	8.0	67
16	20.0	20.4	20.7	20.4	4.2	35
17	20.1	20.4	20.8	20.4	6.8	57
18	20.2	20.5	20.9	20.5	8.2	69
19	20.2	20.6	21.0	20.6	6.1	51
20	20.2	20.5	20.7	20.5	6.1	51
21	20.2	20.5	20.6	20.4	4.0	33
22	20.2	20.3	20.3	20.3	9.0	75
23	20.3	20.4	20.2	20.3	7.8	65
24	20.0	20.1	20.4	20.2	8.8	73
25	20.0	20.4	20.5	20.3	8.9	74
26	20.1	20.2	20.5	20.3	6.7	55
27	20.2	20.5	20.8	20.5	5.7	47
28	20.4	20.7	20.9	20.7	8.0	66
29	20.4	20.6	20.8	20.6	9.5	79
30	20.5	20.8	21.1	20.8	8.4	69
31	20.3	20.6	21.0	20.6	8.5	70
Máxima	20.5	20.8	21.1		10.5	89
Mínima	19.6	19.7	19.9		4.0	33
Oscil	.9	1.1	1.2			
Media	20.0	20.3	20.5	20.3	7.4	62
Total					230.9	

MARZO 1945

NEBULOSIDAD									
T.U. del Merid. 90 W				1200					
Días	N	GENERO DE NUBES						h_L	D_L
		N_L	C_L	N_M	C_M	N_H	C_H		
1	0.4	0.4	Cu.	0.0		0.0		1800	N.
2	0.2	0.2	Cu.	0.0		0.0		1200	N.
3	0.6	0.6	Cu.	0.0		0.0		1500	N.
4	0.2	0.2	Cu.	0.0		0.0		1000	N.
5	0.5	0.5	Cu.	0.0		0.0		1800	N.
6	0.4	0.4	Cu.	0.0		0.0		1200	N.
7	V	V	Cu.	0.0		0.0		1000	N.
8	0.8	V		0.8	Ac.As.	0.0		1800	N.
9	**0.6**	**0.6**	**Cu.**	**0.0**		**0.0**	**Ci.**	**1800**	**N.**
10	**0.4**	**0.0**	**Cu.**	**0.4**	**Sc.**	**0.0**	**Ci.**	**1200**	**N.**
11	0.4	0.3	Cu.	0.0		0.1	Ci.	1500	N.
12	0.6	0.6	Cu.	0.0		0.0		1500	N.
13	0.4	0.4	Cu.	0.0		0.0		1500	N.
14	0.4	0.4	Cu.	0.0		0.0		1200	N.
15	0.6	0.6	Sc.Cu.	0.0		0.0		1200	N.
16	0.8	0.8	Cu.Cb.	0.0		0.0		1500	N.
17	0.4	0.4	Cu.	0.0		0.0		1500	N.
18	0.2	0.2	Cu.	0.0		0.0		1200	N.
19	0.6	0.6	Cu.Cb.	0.0		0.0		800	N.
20	0.6	0.6	Sc.Cu.	0.0		0.0		1500	N.
21	1.0	1.0	Sc.Cu.	0.0	As.	0.0		800	N.
22	0.6	0.6	Cu.Cb.	0.0		0.0		1800	N.
23	0.3	0.3	Cu.	0.0	Ac.	0.0		1500	N.
24	0.4	0.4	Cu.	0.0		0.0	Ci.	1000	N.
25	0.0	0.0		0.0		0.0			
26	0.9	0.9	Cu.Cb.	0.0		0.0		800	
27	0.4	0.4	Cu.Cb.	0.0		0.0		1200	N.
28	0.3	0.3	Cu.	0.0		0.0		1000	N.
29	0.4	0.4	Cu.Fc.	0.0		0.0		1500	S.
30	0.0	0.0		0.0		0.0			
31	0.3	0.3	Cu.	0.0		0.0		1000	S.

RESUMEN MENSUAL

TEMPERATURA en °C.:	
Media	19.0
Máxima día 2, 18, 23 y 26	28.3
Mínima día 9	10.3
PRESION ATMOSFERICA reducida a Temperatura Standard:	
Media	640.1
Máxima día 7	644.8
Mínima día 24	637.4
HUMEDAD RELATIVA en %:	
Media	77
Mínima día 9	27
PUNTO DE ROCIO en °C.:	
Medio	14.4
TENSION DEL VAPOR DE AGUA DE LA ATMOSFERA en mm:	
Medio	12.48
LLUVIA:	
Días con lluvia apreciable	3
Días con lluvia inapreciable	1
Cantidad registrada en el mes en mm	23.0
EVAPORACION EN LA SOMBRA en mm.:	
Total en el mes	199.3
VIENTO:	
Velocidad media en km/h	17.0
Velocidad máxima en km/h día 30	54.0
Presión máxima en kg/m^2	27.3
Recorrido total de kilómetros en el mes	12265.0
Dirección dominante	SSW
TEMPERATURA DEL SUBSUELO en °C. y a 30 cms:	
Media	20.9
INSOLACION:	
Total de horas y décimos	181.9
ESTADO DEL TIEMPO:	
Número de días nublados	2
Número de días medio nublados	19
Número de días despejados	9

ABRIL 1945

TEMPERATURA A LA SOMBRA EN °C.							
Días	7h.	13h.	19h.	Máxima	Mínima	Oscilación	Media
1	16.2	24.4	17.6	26.0	15.5	10.5	19.0
2	14.9	25.8	18.0	28.0	13.3	14.7	18.9
3	17.4	25.0	17.6	26.5	15.0	11.5	19.2
4	17.0	24.0	17.8	25.9	16.3	9.6	19.0
5	16.0	23.8	18.6	25.4	15.0	10.4	18.7
6	14.5	22.8	19.0	25.1	13.5	11.6	17.6
7	14.7	22.5	16.7	24.2	12.9	11.3	17.2
8	14.0	23.7	17.7	25.2	10.5	14.7	17.1
9	14.1	24.2	19.3	26.2	10.3	15.9	17.6
10	13.5	25.0	17.9	27.0	11.6	15.4	17.9
11	15.5	24.5	17.2	26.0	14.1	11.9	18.4
12	16.9	25.5	18.4	27.6	14.5	13.1	18.9
13	16.8	25.2	16.5	27.6	14.5	13.1	19.1
14	17.0	23.9	17.5	24.8	15.3	9.5	18.2
15	16.0	23.2	16.9	25.2	13.9	11.3	18.2
16	16.5	24.7	17.2	24.3	15.0	9.3	18.5
17	16.1	25.5	19.1	26.6	13.7	12.9	19.3
18	17.7	27.2	21.5	28.3	15.8	12.5	20.8
19	15.5	24.3	19.7	26.8	14.0	12.8	19.2
20	14.8	26.2	21.4	27.5	12.0	15.5	19.3
21	16.1	26.5	18.8	27.6	12.5	15.1	19.1
22	18.0	27.0	20.0	27.6	16.9	10.7	20.9
23	18.4	27.6	19.3	28.3	15.3	13.0	20.6
24	17.0	26.8	19.5	28.0	14.9	13.1	20.2
25	16.0	26.1	19.0	27.5	14.9	12.6	19.9
26	16.5	26.5	19.3	28.3	14.1	14.2	19.5
27	17.0	25.6	17.7	27.2	15.9	11.3	19.2
28	17.0	25.0	17.2	26.6	14.9	11.7	18.8
29	14.6	25.4	18.1	27.5	14.0	13.5	19.0
30	18.0	25.3	22.0	26.7	16.2	10.5	20.8
..	....	....	....	....	....	....	....
Máxima	18.4	27.6	22.0	28.3			
Mínima	13.5	22.5	16.5		10.3		
Oscil.	4.9	5.1	5.5			18.0	
Media	16.1	25.1	18.6				19.0

ABRIL 1945

PRESION ATMOSFERICA REDUCIDA A TEMPERATURA STANDARD							
Días	7h	13h	19h	Máxima	Mínima	Oscilación	Media
1	639.9	639.9	638.6	639.9	637.5	2.4	638.7
2	640.0	639.4	639.2	640.6	638.4	2.2	639.3
3	640.2	639.4	638.9	641.5	638.1	3.4	639.4
4	640.0	639.2	639.5	640.6	638.1	2.5	639.4
5	641.0	640.3	640.6	642.0	639.2	2.8	640.5
6	642.7	642.0	641.9	643.9	640.9	3.0	642.4
7	643.2	642.4	641.7	644.8	640.8	4.0	643.6
8	642.0	640.7	640.2	642.7	639.0	3.7	641.0
9	640.4	640.4	639.7	641.4	638.6	2.8	640.1
10	640.9	640.0	640.0	641.7	638.7	3.0	640.3
11	641.2	640.3	640.1	641.8	639.1	2.7	640.5
12	641.1	640.1	639.6	641.5	638.9	2.6	640.2
13	640.9	640.1	639.9	641.1	638.8	2.3	640.2
14	640.2	639.7	639.2	640.7	638.4	2.3	639.6
15	639.4	638.9	638.5	640.3	637.6	2.7	638.9
16	639.4	639.7	639.6	640.4	638.3	2.1	639.3
17	640.5	639.8	639.6	641.1	638.7	2.4	640.1
18	641.0	640.0	639.9	641.8	638.6	3.2	640.3
19	641.5	641.2	641.0	642.6	640.1	2.5	641.2
20	641.4	640.8	640.6	642.1	639.5	2.6	641.1
21	640.9	639.7	639.6	641.5	638.7	2.8	640.3
22	640.3	639.8	639.2	641.3	638.4	2.9	640.0
23	640.3	639.6	639.3	640.6	638.2	2.4	640.0
24	639.7	638.9	639.0	640.1	637.4	2.7	639.6
25	639.1	638.9	638.7	639.7	637.6	2.1	639.4
26	638.9	638.5	638.6	639.8	637.5	2.3	639.3
27	639.4	639.9	639.1	639.9	638.5	1.4	639.4
28	639.3	639.1	638.0	640.2	638.0	2.2	639.2
29	639.6	639.4	639.5	640.6	638.6	2.0	639.4
30	640.9	640.5	640.5	641.8	639.4	2.4	640.5
..	.....	.....	.....	.....	.....	...	.....
Máxima	643.2	642.4	641.9	644.8			
Mínima	638.9	638.5	638.0		637.4		
Oscil.	4.3	3.9	3.9			7.4	
Media	640.5	639.9	639.7				640.1

ABRIL 1945

	HUMEDAD RELATIVA					PUNTO DE ROCIO	TENSION VAPOR
Días	7h.	13h.	19h.	Mínima	Media	Medio	Media
	%	%	%	%	%	°C.	mm.
1	96	56	92	50	82	15.7	13.35
2	99	60	66	48	85	14.7	12.63
3	92	59	95	49	83	16.4	13.99
4	97	63	95	57	85	16.7	14.23
5	92	57	82	45	75	13.6	11.71
6	86	52	56	33	70	11.5	10.22
7	75	53	58	36	67	10.4	9.31
8	79	40	38	30	61	7.0	8.04
9	68	39	47	27	64	8.5	8.32
10	95	41	82	37	77	13.2	11.22
11	93	52	87	46	80	14.5	12.40
12	91	53	84	44	83	15.5	13.17
13	93	54	95	43	82	15.6	13.28
14	91	65	82	56	85	15.6	13.31
15	95	62	92	58	86	15.8	13.44
16	81	54	94	50	81	14.8	12.65
17	90	53	95	55	84	16.0	13.71
18	94	46	44	30	71	14.1	12.25
19	90	44	54	34	69	11.8	10.45
20	92	42	53	28	67	12.4	10.82
21	85	46	93	41	77	15.0	12.90
22	94	49	91	44	78	17.0	14.55
23	88	57	79	46	72	16.8	14.35
24	95	49	87	40	78	16.1	13.73
25	90	53	91	47	81	16.3	13.61
26	95	52	93	44	83	16.6	14.22
27	94	54	90	47	80	16.2	13.69
28	95	62	90	50	86	16.7	14.24
29	85	56	92	45	78	15.0	12.88
30	82	50	53	40	70	13.7	11.81
..	..	..	..	..	..	....	.....
Máxima	99	65	96		..		
Mínima	68	39	38	27			
Oscil.	31	26	58				
Media	90	52	78		77	14.4	12.48

ABRIL 1945

PRECIPITACION				EVAPORACION
Días	Cantidad	Duración	Intensidad	En la sombra
	mms.	Horas	mms/h.	mms.
1	0.0	0.0	0.0	5.5
2	0.0	0.0	0.0	5.5
3	0.0	0.0	0.0	5.1
4	3.3	2.0	1.6	5.2
5	0.0	0.0	0.0	4.1
6	0.0	0.0	0.0	7.5
7	0.0	0.0	0.0	10.3
8	0.0	0.0	0.0	10.0
9	0.0	0.0	0.0	10.3
10	0.0	0.0	0.0	9.6
11	0.0	0.0	0.0	6.7
12	0.0	0.0	0.0	6.0
13	0.0	0.0	0.0	4.8
14	15.9	2.0	7.9	6.5
15	0.0	0.0	0.0	4.7
16	0.0	0.0	0.0	5.8
17	0.0	0.0	0.0	7.0
18	0.0	0.0	0.0	5.5
19	0.0	0.0	0.0	9.0
20	0.0	0.0	0.0	8.3
21	0.0	0.0	0.0	9.5
22	0.0	0.0	0.0	6.1
23	Inap.	Inap.	Inap.	5.9
24	0.0	0.0	0.0	6.3
25	0.0	0.0	0.0	7.9
26	0.0	0.0	0.0	6.2
27	0.0	0.0	0.0	6.0
28	3.8	0.8	4.8	4.1
29	0.0	0.0	0.0	4.7
30	0.0	0.0	0.0	5.2
..	...	...	...	...
Total	23.0	4.8		199.3

ABRIL 1945

VIENTOS					
Días	Velocidad media	Velocidad máxima	Presión máxima	Recorrido total	Dirección dominante
	kms.	kms.	kg/m^2	kms.	
1	19.6	38.0	13.6	470	SSW
2	8.3	24.0	5.4	200	SSW
3	10.8	26.0	6.4	260	SSW
4	10.4	20.0	3.8	250	NNE/SSW
5	28.4	40.0	15.0	680	NNE
6	32.3	44.0	18.2	775	NNE/SSW
7	39.6	50.0	23.5	950	NNE
8	25.6	44.0	18.2	615	NNE
9	19.4	27.0	6.9	465	NNE
10	12.1	25.0	5.9	290	NNE/SSW
11	12.3	25.0	5.9	295	NNE/SSW
12	11.4	21.0	4.3	265	SSW
13	16.2	40.0	15.0	390	SSW
14	10.4	35.0	11.5	250	NNE/SSW
15	18.1	36.0	12.2	435	SSW
16	24.6	50.0	23.5	590	SSW
17	11.6	30.0	8.5	280	SSW
18	15.4	30.0	8.5	370	NNE
19	24.0	36.0	12.2	575	NNE
20	21.4	31.0	9.0	515	NNE
21	13.3	28.0	7.4	320	NNE
22	7.9	26.0	6.4	190	SSW
23	12.3	38.0	13.6	295	SSW
24	15.8	39.0	14.3	380	SSW
25	16.2	43.0	17.4	390	SSW
26	15.0	32.0	9.6	360	SSW
27	11.3	28.0	7.4	270	SSW
28	12.3	37.0	12.8	295	SSW
29	8.1	28.0	7.4	195	NNE/SSW
30	27.1	54.0	27.3	650	NNE
..	....	....	....	...	...
Media	17.0				
Máxima		54.0			
Presión			27.3		
Total				12265	
Dominante					SSW

ABRIL 1945

TEMPERATURA DEL SUBSUELO A 30 cms. DE PROFUNDIDAD					INSOLACION	
Días	7h.	13h.	19h.	Media	Horas de sol	Fracción de insol
	°C.	°C.	°C.	°C.	hs.	%
1	20.4	20.7	21.0	20.7	8.0	66
2	20.3	20.7	21.2	20.7	7.0	56
3	20.7	21.2	21.4	21.1	4.4	36
4	20.9	21.2	21.5	21.2	1.6	13
5	20.9	21.1	21.2	21.1	2.5	21
6	20.9	21.3	21.2	21.0	7.4	61
7	21.0	20.9	20.9	20.9	9.3	77
8	20.8	21.1	20.9	20.9	9.3	77
9	20.4	20.6	20.9	20.6	9.7	81
10	20.6	20.7	20.9	20.7	4.1	33
11	20.4	20.5	20.4	20.4	3.4	28
12	20.4	20.7	20.8	20.6	3.4	28
13	20.5	20.7	20.8	20.7	3.8	31
14	20.6	20.8	20.9	20.8	3.8	31
15	20.6	20.8	20.9	20.8	7.5	60
16	20.7	20.8	20.9	20.8	8.5	68
17	20.6	20.8	21.0	20.8	6.8	55
18	20.6	20.8	21.0	20.8	6.0	48
19	20.7	20.8	21.0	20.8	6.8	54
20	20.6	20.8	21.1	20.8	9.0	72
21	20.7	20.8	21.0	20.8	7.5	60
22	20.6	20.8	21.1	20.8	3.4	27
23	20.7	20.9	21.1	20.9	4.7	38
24	20.7	20.9	21.2	20.9	8.0	64
25	20.7	20.9	21.2	20.9	8.0	64
26	20.9	21.3	21.5	21.3	7.0	56
27	21.0	21.3	21.5	21.3	4.0	32
28	21.1	21.3	21.5	21.3	4.5	36
29	21.2	21.4	21.5	21.4	7.0	55
30	21.4	21.5	21.7	21.5	5.5	44
..	....	....	....	....	...	..
Máxima	21.4	21.5	21.7		9.7	81
Mínima	20.3	20.5	20.4		1.6	13
Oscil.	1.1	1.0	1.3			
Media	20.7	20.9	21.1	20.9	6.1	49
Total					181.9	

ABRIL 1945

NEBULOSIDAD									
T.U. del Merid. 90 W				1200					
Días	N	GENERO DE NUBES						h_L	D_L
		N_L	C_L	N_M	C_M	N_H	C_H		
1	0.4	0.4	Cu.	0.0		0.0		1000	S.
2	0.6	0.0	Cu.	0.6	Ac.	0.0	Ci.	1200	S.
3	0.6	0.0	Cu.	0.6	As.Ac.	0.0	Ci.	1500	S.
4	0.9	0.9	Sc.	0.0		0.0		600	
5	0.7	0.7	Cu.Cb.	0.0		0.0		1200	N.
6	0.6	0.6	Cu.Cb.	0.0		0.0		1800	N.
7	0.4	0.4	Cu.	0.0		0.0		1800	N.
8	V	V	Cu.	0.0		0.0		800	N.
9	V	V	Cu.	0.0		0.0		1000	N.
10	0.7	0.7	Cu.Sc.	0.0		0.0		2500	
11	0.4	0.4	Cu.	0.0		0.0			N.
12	0.7	0.7	Sc.Cb.	0.0		0.0			
13	0.6	0.6	Cu.Sc.	0.0		0.0		2500	
14	0.7	0.7	Cu.	0.0		0.0		2200	S.
15	0.2	0.2	Cu.	0.0		0.0		1000	S.
16	0.2	0.2	Cu.	0.0		0.0			S.
17	0.8	0.8	Cu.Cb.	0.0		0.0		1400	S.
18	0.5	0.5	Cu.	0.0		0.0		1500	
19	0.6	0.6	Cu.	0.0		0.0		1650	N.
20	0.1	0.1	Cb.	0.0		0.0			
21	0.2	0.2	Cu.	0.0		0.0			N.
22	0.7	0.7	Cu.	0.0		0.0			
23	0.7	0.7	Cu.	0.0		0.0		1300	S.
24	0.5	0.5	Cu.	0.0		0.0		2400	S.
25	0.4	0.0	Cu.	0.4	Ast.	0.0			S.
26	0.2	0.2	Cu.	0.0		0.0			S.
27	-.-	-.-		-.-		-.-			
28	0.4	0.4	Cu.Cb.	0.0		0.0		1800	S.
29	0.4	0.4	Cu.Cb.	0.0		0.0			
30	0.4	0.4	Cu.	0.0		0.0			N.
..	...	...	..	...		...		....	..

MAYO 1945

RESUMEN MENSUAL	
TEMPERATURA en °C.:	
Media	19.1
Máxima día 3	30.3
Mínima día 7	11.6
PRESION ATMOSFERICA reducida a Temperatura Standard:	
Media	639.9
Máxima día 5	642.8
Mínima día 14	636.8
HUMEDAD RELATIVA en %:	
Media	80
Mínima día 2	26
PUNTO DE ROCIO en °C.:	
Medio	15.3
TENSION DEL VAPOR DE AGUA DE LA ATMOSFERA en mm:	
Medio	13.06
LLUVIA:	
Días con lluvia apreciable	7
Días con lluvia inapreciable	4
Cantidad registrada en el mes en mm	42.3
EVAPORACION EN LA SOMBRA en mm:	
Total en el mes	174.6
VIENTO:	
Velocidad media en km/h	16.2
Velocidad máxima en km/h día 1	48.0
Presión máxima en kg/m^2	21.7
Recorrido total de kilómetros en el mes	12125.0
Dirección dominante	NNE
TEMPERATURA DEL SUBSUELO en °C. y a 30 cms:	
Media	21.5
INSOLACION:	
Total de horas y décimos	163.6
ESTADO DEL TIEMPO:	
Número de días nublados	17
Número de días medio nublados	14
Número de días despejados	0

MAYO 1945

TEMPERATURA A LA SOMBRA EN °C.							
Días	7h.	13h.	19h.	Máxima	Mínima	Oscilación	Media
1	16.2	25.0	19.4	26.7	14.9	11.8	19.9
2	16.4	27.7	19.7	28.6	12.6	16.0	19.4
3	15.8	29.4	19.5	30.3	12.9	17.4	19.7
4	16.1	26.2	20.8	27.4	15.4	12.0	20.4
5	17.2	22.5	19.5	24.2	15.7	8.5	19.2
6	14.5	25.0	20.5	27.0	12.7	14.3	19.0
7	14.5	28.2	18.3	29.6	11.6	18.0	19.1
8	15.7	28.0	20.5	29.8	12.7	17.1	20.0
9	17.0	26.7	19.5	28.3	15.7	12.6	19.6
10	16.5	26.3	18.2	28.2	15.0	13.2	19.5
11	18.2	26.5	17.6	28.5	15.0	13.5	19.2
12	16.8	24.5	18.4	26.4	14.7	11.7	20.9
13	17.1	23.9	17.9	24.5	16.4	8.1	19.2
14	17.0	23.3	18.5	24.9	15.6	9.3	19.4
15	17.0	21.5	18.1	23.5	16.5	7.0	18.7
16	17.4	22.5	17.9	25.1	15.8	9.3	18.8
17	16.1	24.0	21.2	26.2	15.3	10.9	19.7
18	17.8	24.9	20.1	25.9	15.6	10.3	20.0
19	16.9	22.8	18.5	24.5	16.0	8.5	18.4
20	16.0	23.0	17.3	25.5	15.2	10.3	18.6
21	16.8	24.6	16.0	26.6	15.7	10.9	17.9
22	16.1	19.0	16.0	22.2	14.7	7.5	17.2
23	15.6	21.5	15.5	23.7	15.3	8.4	17.4
24	17.0	21.0	18.5	25.6	15.5	10.1	18.6
25	16.7	22.4	17.5	24.3	15.6	8.7	18.8
26	16.5	23.5	18.0	26.5	15.0	11.5	18.8
27	16.5	25.4	18.3	26.7	14.8	11.9	18.8
28	16.5	25.0	17.5	26.0	13.5	12.5	18.7
29	16.2	25.0	20.0	25.9	14.6	11.3	19.2
30	16.1	27.1	18.8	28.0	14.4	13.6	19.4
31	16.7	25.0	18.9	27.6	14.2	13.4	19.4
Máxima	18.2	29.4	21.2	30.3			
Mínima	14.5	19.0	15.5		11.6		
Oscil.	3.7	10.4	5.7			18.7	
Media	16.5	24.6	18.6				19.1

MAYO 1945

PRESION ATMOSFERICA REDUCIDA A TEMPERATURA STANDARD							
Días	7h.	13h.	19h.	Máxima	Mínima	Oscilación	Media
1	640.9	640.8	640.6	642.2	639.6	2.6	640.9
2	640.4	639.4	639.4	642.0	638.2	3.8	639.9
3	639.6	638.3	639.4	640.7	637.6	3.1	639.4
4	641.0	640.0	640.6	642.3	639.3	3.0	640.7
5	642.0	641.8	641.6	642.8	640.6	2.2	641.6
6	642.5	641.1	640.7	642.7	639.6	3.1	641.2
7	641.0	640.8	640.7	641.5	638.7	2.8	640.2
8	641.0	639.8	639.7	641.4	638.7	2.7	640.3
9	641.1	639.9	639.9	641.6	638.9	2.7	640.3
10	640.5	639.6	639.4	640.7	638.5	2.2	639.7
11	640.3	639.7	639.6	641.5	638.0	3.5	639.8
12	640.1	639.6	639.4	640.6	638.4	2.2	639.7
13	639.5	639.4	639.0	640.3	637.5	2.8	639.1
14	639.9	638.6	637.9	639.9	636.8	3.1	638.4
15	638.3	637.9	637.4	638.8	636.9	1.9	637.8
16	638.5	638.4	638.3	639.7	637.2	2.5	638.2
17	640.0	639.6	639.0	640.8	638.1	2.7	639.4
18	641.1	640.7	640.4	641.5	640.4	1.1	640.4
19	641.2	640.6	640.8	641.8	639.6	2.2	640.8
20	640.4	639.8	639.2	641.1	638.4	2.7	639.7
21	639.9	639.4	639.9	641.3	638.7	2.6	639.8
22	640.2	640.7	639.9	640.9	639.4	1.5	640.2
23	640.4	639.9	639.7	641.1	638.8	2.3	639.9
24	639.3	638.9	638.7	640.4	637.7	2.7	639.1
25	639.3	638.7	639.7	640.6	638.5	2.1	639.4
26	640.1	640.1	639.7	641.0	638.7	2.3	639.9
27	641.1	640.1	639.9	641.5	638.9	2.6	640.2
28	641.1	640.9	640.9	641.8	639.4	2.4	640.6
29	640.9	640.0	639.7	641.4	638.6	2.8	640.3
30	641.0	640.3	639.9	641.4	639.1	2.3	640.4
31	641.0	640.1	639.6	641.2	638.7	2.5	640.0
Máxima	642.5	641.8	641.6	642.8			
Mínima	638.3	637.9	637.4		636.8		
Oscil.	4.2	3.9	4.2			6.0	
Media	640.4	639.8	639.7				639.9

MAYO 1945

	HUMEDAD RELATIVA					PUNTO DE ROCIO	TENSION VAPOR
Días	7h.	13h.	19h.	Mínima	Media	Medio	Media
	%	%	%	%	%	°C.	mm.
1	89	50	57	33	72	13.0	11.26
2	89	50	84	20	71	16.0	13.68
3	75	39	92	27	73	14.5	12.59
4	95	50	63	44	72	14.0	12.50
5	85	56	68	49	72	14.8	11.87
6	90	47	61	37	76	12.8	11.12
7	82	34	93	30	78	12.7	11.51
8	89	39	88	35	77	15.1	12.97
9	91	50	92	37	80	16.0	13.99
10	95	58	88	53	83	16.5	14.06
11	88	57	94	48	83	16.8	14.31
12	94	68	95	53	87	17.1	14.70
13	94	69	92	64	85	16.9	14.47
14	93	68	96	64	88	16.9	14.47
15	95	78	91	67	88	16.7	14.30
16	94	58	92	56	82	16.0	13.39
17	90	43	60	37	69	13.0	11.24
18	74	50	64	42	70	13.3	11.48
19	91	63	82	55	81	15.4	13.16
20	90	57	93	48	84	14.9	12.69
21	94	61	97	55	89	16.0	13.61
22	95	69	95	64	90	15.9	13.57
23	99	72	95	65	90	15.5	13.25
24	91	69	91	58	85	16.2	13.53
25	94	67	95	58	83	16.2	13.79
26	80	57	91	48	78	14.9	12.73
27	91	55	93	42	79	16.0	13.63
28	91	50	95	44	86	15.2	12.96
29	92	49	67	43	72	14.1	12.08
30	85	46	93	40	79	15.2	13.03
31	89	51	88	45	80	15.3	13.04
Máxima	99	89	97				
Mínima	74	34	57	26			
Oscil.	25	55	40				
Media	90	56	85		80	15.3	13.06

MAYO 1945

	PRECIPITACION			EVAPORACION
Días	Cantidad	Duración	Intensidad	En la sombra
	mms.	Horas	mms/h.	mms.
1	0.0	0.0	0.0	9.4
2	0.0	0.0	0.0	8.3
3	0.0	0.0	0.0	8.0
4	0.0	0.0	0.0	8.6
5	0.0	0.0	0.0	8.2
6	0.0	0.0	0.0	7.5
7	0.0	0.0	0.0	9.3
8	0.0	0.0	0.0	7.3
9	0.0	0.0	0.0	5.6
10	0.0	0.0	0.0	5.5
11	0.0	0.0	0.0	5.0
12	23.4	2.0	11.7	5.6
13	0.0	0.0	0.0	4.0
14	0.0	0.0	0.0	4.1
15	Inap	Inap	Inap	4.5
16	0.0	0.0	0.0	3.5
17	0.0	0.0	0.0	4.4
18	0.0	0.0	0.0	8.0
19	Inap	Inap	Inap	6.6
20	Inap	Inap	Inap	4.0
21	0.5	0.8	0.6	3.7
22	2.6	2.5	1.0	2.5
23	12.3	7.6	1.6	2.0
24	1.8	6.0	0.3	2.0
25	Inap	Inap	Inap	3.8
26	0.0	0.0	0.0	4.8
27	0.0	0.0	0.0	5.8
28	1.2	0.6	2.0	5.2
29	0.5	1.0	0.5	5.4
30	0.0	0.0	0.0	6.6
31	0.0	0.0	0.0	5.4
Total	42.3	20.5		174.6

MAYO 1945

VIENTOS					
Días	Velocidad media	Velocidad máxima	Presión máxima	Recorrido total	Dirección dominante
	kms.	kms.	kg/m²	kms.	
1	25.2	48.0	21.7	605	NNE
2	15.2	27.0	6.9	365	NNE
3	10.4	28.0	7.4	250	NNE
4	21.6	42.0	16.6	520	NNE
5	23.8	38.0	13.6	570	NNE
6	25.0	36.0	12.2	600	NNE
7	13.7	33.0	10.1	330	NNE
8	7.7	17.0	2.7	185	NNE
9	10.8	22.0	4.6	260	NNE/SSW
10	12.5	33.0	10.1	300	SSW
11	15.2	37.0	12.8	365	SSW
12	12.3	36.0	12.2	295	SSW
13	18.3	41.0	15.8	430	SSW
14	16.7	42.0	16.6	400	SSW
15	23.3	40.0	15.0	560	SSW
16	19.0	30.0	8.5	455	SSW
17	15.0	26.0	6.4	360	NNE
18	17.1	22.0	4.6	410	NNE
19	17.7	26.0	6.4	425	NNE
20	10.8	17.0	2.7	260	NNE
21	10.6	26.0	6.4	255	NNE
22	11.9	19.0	3.4	285	NNE/SSW
23	7.3	26.0	6.4	175	SSW
24	15.4	36.0	12.2	370	NNE/SSW
25	20.8	28.0	7.4	500	NNE
26	25.0	33.0	10.1	600	NNE
27	19.2	27.0	6.9	460	NNE
28	19.8	28.0	7.4	475	NNE
29	21.0	28.0	7.4	505	NNE
30	12.9	22.0	4.6	360	NNE
31	8.2	25.0	5.9	195	NNE
Media	16.2				
Máxima		48.0			
Presión			21.7		
Total				12125	
Dominante					NNE

MAYO 1945

Días	TEMPERATURA DEL SUBSUELO A 30 cms. DE PROFUNDIDAD 7h.	13h.	19h.	Media	INSOLACION Horas de sol	Fracción de insol.
	°C.	°C.	°C.	°C.	hs.	%
1	21.4	21.5	21.7	21.5	6.4	52
2	21.4	21.6	21.8	21.6	8.4	66
3	21.4	21.5	21.7	21.5	6.5	52
4	21.5	21.6	21.8	21.6	5.8	46
5	21.5	21.6	21.8	21.6	3.8	30
6	21.5	21.6	21.8	21.6	9.0	71
7	21.5	21.5	21.6	21.5	7.5	55
8	21.4	21.5	21.6	21.5	6.0	47
9	21.5	21.6	21.7	21.6	4.5	35
10	21.6	21.6	21.5	21.6	4.0	32
11	21.6	21.6	21.5	21.5	6.5	51
12	21.6	21.6	21.6	21.6	7.1	55
13	21.6	21.7	21.6	21.6	7.0	55
14	21.6	21.8	21.7	21.7	7.5	58
15	21.6	21.7	21.7	21.7	2.2	17
16	21.6	21.8	21.7	21.7	1.9	15
17	21.7	21.8	21.7	21.7	1.6	12
18	21.7	21.9	21.8	21.8	3.0	23
19	21.7	21.9	21.8	21.8	2.3	18
20	21.6	21.8	21.7	21.8	2.0	16
21	21.6	21.8	21.7	21.7	3.3	26
22	21.6	21.6	21.6	21.6	1.6	12
23	21.4	21.5	21.4	21.4	3.5	27
24	21.5	21.5	21.4	21.5	3.8	30
25	21.4	21.5	21.3	21.4	3.6	29
26	21.1	21.4	21.3	21.3	7.3	57
27	21.1	21.4	21.3	21.3	7.2	57
28	21.0	21.2	20.9	21.0	7.7	60
29	20.9	21.3	21.1	21.1	9.6	74
30	20.9	21.0	20.9	20.9	6.7	52
31	20.9	21.0	20.8	20.9	6.3	48
Máxima	21.7	21.9	21.8		9.6	74
Mínima	20.9	21.0	20.8		1.6	12
Oscil	.8	.9	1.0			
Media	21.4	21.6	21.6	21.5	5.3	41
Total					163.6	

MAYO 1945

NEBULOSIDAD									
T.U. del Merid. 90 W					1200				
Días	N	GENERO DE NUBES						h_L	D_L
		N_L	C_L	N_M	C_M	N_H	C_H		
1	0.6	0.6	Cu.Cb.	0.0		0.0		1500	N.
2	0.5	0.5	Cu.	0.0		0.0		2000	N.
3	0.7	0.7	Cu.Cb.	0.0		0.0		2000	N.
4	0.5	0.5	Cu.	0.0		0.0		1500	N.
5	0.8	0.4	Cu.	0.8	As.	0.0		1800	N.
6	0.4	0.4	Cu.	-.-	As.	-.-	Ci.	1500	N.
7	0.6	V	Cu.	0.6	As.	-.-	Ci.		N.
8	0.5	0.5	Cu.	-.-	As.	-.-	Ci.	1500	N.
9	0.8	0.4	Cu.	-.-	As.	-.-	Cs.	1500	N.
10	0.6	0.2	Cu.	0.6	As.	0.0		1500	S.
11	0.8	0.8	Cu.	-.-	As.	0.0		1200	S.
12	0.7	0.3	Cu.	-.-	As.	-.-	Cs.	1800	S.
13	0.8	0.8	Cu.Cb.	-.-	Ac.As.	-.-	Ci.Cs.		
14	0.8	0.3	Cu.	-.-	Ac.	-.-	Ci.	1200	S.
15	0.8	0.4	Cu.Sc.	0.8	As.	0.0			S.
16	0.7	0.7	Cu.Cb.	-.-	As.	-.-	Ci.	1800	S.
17	0.8	0.4	Cu.	0.8	Ac.As.	-.-	Ci.	1500	NE.
18	0.9	0.5	Cu.	-.-	As.	-.-	Cs.	1800	N.
19	0.9	0.9	Cu.	-.-	Ac.	-.-	Ci.	2000	N.
20	1.0	1.0	Cu.Cb.	-.-	As.	0.0			N.
21	0.7	0.7	Cu.Cb.	-.-	As.	0.0			N.
22	0.9	0.9	Cu.Cb.	0.0		0.0		1200	N.
23	0.8	0.8	Cu.Cb.	0.0		0.0		800	N.
24	0.9	0.9	Cu.Cb.	-.-	Ac.	0.0		800	N.
25	0.9	0.9	Cu.Ns.	-.-	Ac.	0.0		1000	N.
26	0.8	0.8	Cu.Cb.	-.-	As.	0.0		1800	N.
27	0.7	0.7	Cu.Cb.	-.-	Ac.	-.-	Ci.	1800	N.
28	0.6	0.5	Cu.Cb.	0.4	Ac.	0.0		1200	N.
29	0.5	0.5	Cu.Cb.	-.-	Ac.	0.0		1500	N.
30	0.7	0.7	Cu.Cb.	0.0		0.0		1500	N.
31	0.9	0.9	Cu.Cb.	-.-	As.	0.0		1200	N.

RESUMEN MENSUAL

TEMPERATURA en °C.:	
Media	19.1
Máxima día 10	28.4
Mínima día 2	13.3
PRESION ATMOSFERICA reducida a Temperatura Standard:	
Media	639.8
Máxima día 7	642.3
Mínima día 21	637.2
HUMEDAD RELATIVA en %:	
Media	85
Mínima día 7	33
PUNTO DE ROCIO en °C.:	
Medio	16.4
TENSION DEL VAPOR DE AGUA DE LA ATMOSFERA en mm:	
Medio	14.16
LLUVIA:	
Días con lluvia apreciable	19
Días con lluvia inapreciable	2
Cantidad registrada en el mes en mm	296.9
EVAPORACION EN LA SOMBRA en mm.:	
Total en el mes	122.8
VIENTO:	
Velocidad media en km/h	13.8
Velocidad máxima en km/h día 6 y 7	38.0
Presión máxima en kg/m^2	13.6
Recorrido total de kilómetros en el mes	9870.0
Dirección dominante	NNE
TEMPERATURA DEL SUBSUELO en °C. y a 30 cms:	
Media	21.5
INSOLACION:	
Total de horas y décimos	163.1
ESTADO DEL TIEMPO:	
Número de días nublados	18
Número de días medio nublados	11
Número de días despejados	1

JUNIO 1945

TEMPERATURA A LA SOMBRA EN °C.							
Días	7h.	13h.	19h.	Máxima	Mínima	Oscilación	Media
1	16.4	22.8	17.8	23.6	14.1	9.5	18.3
2	19.6	25.0	19.3	27.2	13.3	13.9	19.8
3	19.0	20.9	17.0	27.0	15.9	11.1	18.5
4	18.0	26.4	20.4	27.5	15.0	12.5	20.7
5	17.6	20.8	22.0	27.5	15.3	12.2	21.1
6	19.0	25.5	21.5	26.8	16.2	10.6	20.4
7	17.4	26.0	21.5	27.0	16.1	10.9	20.6
8	18.0	25.3	20.7	26.8	16.7	10.1	20.6
9	18.0	25.6	20.2	26.8	15.5	11.3	20.6
10	18.0	27.4	18.5	28.4	16.5	11.9	20.1
11	20.4	17.0	18.3	20.5	16.3	10.2	19.3
12	17.0	21.8	17.1	24.1	16.4	7.7	18.2
13	17.7	20.0	17.2	22.0	15.8	6.2	17.6
14	17.3	22.5	17.9	25.8	14.7	11.1	18.6
15	17.0	24.3	20.5	25.5	15.5	10.0	19.8
16	17.1	22.3	18.2	23.5	15.5	8.0	18.1
17	15.8	22.5	19.2	24.4	15.2	9.2	18.7
18	17.0	21.5	19.0	22.7	16.3	6.4	18.2
19	19.0	24.1	20.0	26.2	16.0	10.2	17.1
20	18.2	22.3	18.4	26.4	15.2	11.2	19.0
21	16.8	23.9	18.5	26.0	14.7	11.3	18.2
22	17.0	22.0	17.5	23.0	15.6	7.4	17.8
23	17.5	24.2	18.4	24.5	15.5	9.0	18.9
24	16.5	23.8	18.0	24.5	16.3	8.2	19.2
25	17.6	23.0	17.7	23.6	16.5	7.1	18.4
26	17.1	22.0	18.5	25.0	16.4	8.6	19.6
27	18.2	24.7	20.4	25.0	16.7	8.9	20.2
28	18.0	25.9	19.3	27.0	15.6	11.4	20.1
29	17.0	18.1	16.9	23.5	15.1	8.4	17.4
30	17.1	23.0	18.0	24.4	13.4	11.0	18.1
..	....	....	....	....	....	....	....
Máxima	20.4	27.4	22.0	28.4			
Mínima	15.8	17.0	16.5		13.3		
Oscil.	4.6	10.4	5.5			15.1	
Media	17.7	23.4	18.8				19.1

JUNIO 1945

PRESION ATMOSFERICA REDUCIDA A TEMPERATURA STANDARD							
Días	7h.	13h.	19h.	Máxima	Mínima	Oscilación	Media
1	640.3	639.7	639.3	640.4	638.3	2.1	639.7
2	640.0	639.7	639.3	640.6	638.2	2.4	639.5
3	640.1	639.9	639.5	640.5	638.7	1.8	639.7
4	640.2	639.8	639.4	640.7	638.3	2.4	639.6
5	640.7	639.9	639.7	640.9	638.8	2.1	640.0
6	640.9	640.9	640.6	641.6	639.5	2.1	640.7
7	641.9	641.2	640.7	642.3	639.8	2.5	641.2
8	640.9	640.4	639.1	641.5	638.4	3.1	640.2
9	640.0	639.6	640.0	640.4	638.0	2.4	639.4
10	639.5	639.3	639.1	640.5	637.6	2.9	639.2
11	640.0	639.8	639.7	640.5	637.8	2.7	639.5
12	639.9	638.9	639.3	640.2	637.9	2.3	639.2
13	639.6	639.5	639.6	640.5	638.4	2.1	639.4
14	640.4	639.5	639.4	640.6	638.5	2.1	639.8
15	640.4	639.9	639.2	640.7	639.2	1.5	639.9
16	639.9	640.3	639.8	640.9	638.9	2.0	640.0
17	640.7	640.0	639.4	640.9	638.5	2.4	639.9
18	640.5	640.1	639.6	640.7	638.3	2.4	639.7
19	640.0	639.5	639.1	640.4	637.7	2.7	639.4
20	639.7	639.4	639.2	640.5	638.1	2.4	639.4
21	639.0	637.9	638.7	640.2	637.2	3.0	638.6
22	639.2	638.6	638.8	639.8	637.5	2.3	638.7
23	640.1	639.6	639.5	640.5	638.5	2.0	639.5
24	640.3	639.9	639.9	640.5	638.6	1.9	639.7
25	640.4	639.8	639.9	641.0	639.0	2.0	640.0
26	640.9	640.8	640.6	641.5	639.4	2.1	640.6
27	641.0	640.5	639.9	641.4	639.4	2.0	640.5
28	640.8	639.7	639.4	641.3	638.5	2.8	639.9
29	640.7	640.1	640.0	641.2	639.4	1.8	640.1
30	640.4	640.7	641.1	642.2	639.6	2.6	640.7
..	.....	.....	.....	.....	.....	...	.....
Máxima	641.9	641.2	641.1	642.3			
Mínima	639.0	637.9	638.7		637.2		
Oscil.	2.9	3.3	2.4			5.1	
Media	640.3	639.8	639.6				639.8

JUNIO 1945

	HUMEDAD RELATIVA					PUNTO DE ROCIO	TENSION VAPOR
Días	7h.	13h.	19h.	Mínima	Media	Medio	Media
	%	%	%	%	%	°C.	mm.
1	91	71	92	63	86	16.3	13.92
2	82	64	96	48	82	17.5	15.00
3	79	88	95	50	86	16.8	14.44
4	91	54	90	46	81	17.8	15.32
5	91	47	67	39	72	15.4	13.13
6	81	59	71	47	75	16.3	13.91
7	86	42	63	33	72	14.2	11.93
8	92	56	71	45	76	16.0	13.61
9	89	54	94	52	81	17.1	14.64
10	93	50	95	46	84	16.9	14.43
11	83	95	96	55	89	17.1	14,68
12	95	83	96	65	91	16.9	15.10
13	92	91	93	80	93	17.0	14.55
14	89	66	92	55	86	15.6	13.62
15	94	50	76	49	80	12.0	13.10
16	94	75	95	69	89	17.0	14.58
17	92	65	95	60	85	16.2	13.85
18	89	73	91	70	86	16.4	15.99
19	83	64	92	50	84	17.1	14.67
20	80	56	95	44	87	15.7	13.44
21	96	61	95	52	90	15.8	13.44
22	94	72	95	68	91	16.0	14.15
23	92	68	96	68	89	17.3	14.85
24	95	71	96	59	86	17.1	14.62
25	94	74	85	69	91	16.6	14.24
26	99	73	95	66	87	17.2	14.75
27	95	66	72	54	82	16.8	14.78
28	92	60	85	56	82	17.0	14.30
29	92	90	95	70	91	16.1	13.73
30	94	67	90	55	84	16.3	13.91
..	..	..	..	..	..	....	.....
Máxima	99	95	96				
Mínima	79	42	63	33			
Oscil.	20	53	33				
Media	90	67	89		85	16.4	14.16

JUNIO 1945

	PRECIPITACION			EVAPORACION
Días	Cantidad	Duración	Intensidad	En la sombra
	mms.	Horas	mms/h.	mms.
1	Inap	Inap	Inap	4.8
2	0.0	0.0	0.0	4.5
3	0.5	0.3	1.7	5.9
4	42.1	1.4	30.5	2.7
5	0.0	0.0	0.0	6.4
6	0.0	0.0	0.0	8.8
7	0.0	0.0	0.0	8.0
8	0.0	0.0	0.0	8.4
9	0.0	0.0	0.0	7.1
10	0.0	0.0	0.0	5.0
11	0.0	0.0	0.0	4.0
12	41.6	5.0	8.3	3.1
13	41.5	4.8	10.6	2.0
14	4.2	2.2	1.9	2.0
15	6.8	3.2	2.1	3.1
16	Inap	Inap	Inap	5.8
17	25.7	5.2	5.0	2.5
18	0.5	0.5	1.0	3.9
19	0.6	0.5	0.1	3.2
20	3.0	3.0	1.0	4.0
21	8.3	4.2	2.0	2.8
22	23.0	5.0	4.2	2.2
23	15.3	5.0	3.0	2.0
24	41.2	4.3	3.3	1.4
25	13.8	3.0	4.6	2.8
26	8.0	1.8	4.4	2.3
27	7.5	2.0	3.8	2.5
28	0.0	0.0	0.0	4.5
29	7.6	1.2	6.3	5.1
30	5.7	5.2	1.1	2.0
..	...	...	...	...
Total	296.9	57.8		122.8

JUNIO 1945

VIENTOS					
Días	Velocidad media	Velocidad máxima	Presión máxima	Recorrido total	Dirección dominante
	kms.	kms.	kg/m²	kms.	
1	9.4	20.0	3.8	225	NNE/SSW
2	11.4	28.0	7.4	250	NNE/SSW
3	5.6	12.0	1.4	135	NNE/SSW
4	8.4	22.0	4.6	200	NNE
5	21.2	33.0	10.1	510	NNE
6	26.7	38.0	13.6	640	NNE
7	25.0	38.0	13.6	600	NNE
8	25.2	34.0	10.9	605	NNE
9	14.0	28.0	7.4	335	NNE/SSW
10	11.5	22.0	4.6	275	NNE/SSW
11	9.6	23.0	5.0	230	NNE
12	9.8	20.0	3.8	235	SSW
13	10.6	24.0	5.4	255	NNE
14	8.6	22.0	4.6	205	NNE/SSW
15	24.2	30.0	8.5	580	NNE
16	20.2	26.0	6.4	485	NNE
17	22.1	26.0	6.4	530	NNE
18	22.5	27.0	6.9	540	NNE
19	17.5	27.0	6.9	420	NNE
20	12.1	16.0	2.4	290	NNE
21	6.7	22.0	4.6	160	NNE/SSW
22	4.6	19.0	3.4	110	NNE/SSW
23	5.6	17.0	2.7	135	NNE
24	10.4	23.0	5.0	245	NNE
25	16.1	30.0	8.5	385	NNE
26	5.2	18.0	2.9	125	NNE
27	19.6	24.0	5.4	470	NNE
28	11.0	18.0	2.9	265	NNE/SSW
29	6.7	13.0	1.5	160	NNE
30	11.2	14.0	1.9	270	NNE/SSW
..	....	....	....	...	...
Media	13.8				
Máxima		38.0			
Presión			13.6		
Total				9870	
Dominante					NNE

JUNIO 1945

TEMPERATURA DEL SUBSUELO A 30 cms. DE PROFUNDIDAD					INSOLACION	
Días	7h.	13h.	19h.	Media	Horas de sol	Fracción de insol.
	°C.	°C.	°C.	°C.	hs.	%
1	20.9	21.2	21.1	21.1	1.4	11
2	21.0	21.3	21.1	21.1	7.9	61
3	21.1	21.3	21.2	21.2	3.9	30
4	21.2	21.3	21.2	21.2	7.8	60
5	21.1	21.3	21.2	21.2	11.0	85
6	21.2	21.3	21.3	21.3	10.0	77
7	21.1	21.4	21.6	21.4	10.0	77
8	21.4	21.7	21.9	21.7	9.7	75
9	21.4	21.7	21.9	21.7	7.0	54
10	21.4	21.7	21.7	21.6	3.8	29
11	21.6	21.9	21.7	21.7	6.3	48
12	21.7	21.8	21.8	21.8	2.0	15
13	21.7	21.8	21.8	21.8	0.5	4
14	21.7	21.8	21.7	21.7	4.9	38
15	21.6	21.7	21.7	21.7	8.4	65
16	21.5	21.5	21.5	21.5	1.8	14
17	21.6	21.7	21.7	21.7	5.4	42
18	21.4	21.5	21.4	21.4	4.5	35
19	21.5	21.6	21.5	21.5	8.0	62
20	21.4	21.5	21.5	21.5	5.5	42
21	21.4	21.5	21.5	21.5	4.8	37
22	21.4	21.4	21.4	21.4	2.6	20
23	21.4	21.4	21.4	21.4	4.2	32
24	21.3	21.4	21.3	21.3	2.0	15
25	21.3	21.4	21.4	21.4	2.0	15
26	21.4	21.5	21.4	21.4	1.8	14
27	21.4	21.6	21.5	21.5	8.8	68
28	21.4	21.5	21.5	21.5	9.0	69
29	21.6	21.6	21.6	21.6	1.0	8
30	21.5	21.7	21.6	21.6	7.1	55
..	....	....	....	....	...	..
Máxima	21.7	21.9	21.9		11.0	85
Mínima	20.9	21.2	21.1		0.5	4
Oscil.	.8	.7	.8			
Media	21.4	21.5	21.5	21.5	5.4	42
Total					163.1	

JUNIO 1945

NEBULOSIDAD									
T.U. del Merid. 90 W					1200				
Días	N	GENERO DE NUBES						h_L	D_L
		N_L	C_L	N_M	C_M	N_H	C_H		
1	0.8	0.4	Cu.Cb.	0.4	Ac.	0.0		1500	
2	0.8	0.8	Cu.Cb.	-.-	Ac.	0.0		2000	
3	1.0	1.0	Cb.	0.0		0.0		800	
4	0.5	0.5	Cu.	0.0		0.0		1200	N.
5	0.4	0.3	Cu.	0.2	Ac.	0.0		1200	N.
6	0.5	0.5	Cu.Cb.	V	Ac.	0.0		1000	N.
7	0.4	0.4	Cu.Cb.	0.0		0.0		1800	N.
8	0.4	0.4	Cu.	-.-	Ac.	-.-	Ci.	1800	N.
9	0.6	0.6	Cu.Cb.	0.0		0.0		1000	N.
10	0.8	0.8	Cu.Cb.	0.0		0.0		1200	N.
11	0.8	0.8	Cu.Cb.	0.0		0.0		1000	S.
12	0.8	0.8	Cu.Cb.	0.0		0.0		800	
13	0.9	0.9	Cu.Cb.	0.0		0.0		800	S.
14	0.8	0.8	Cu.Cb.	-.-	Ac.	0.0		1500	N.
15	0.8	0.8	Cu.Cb.	0.0		0.0		1800	N.
16	0.8	0.8	Cu.Cb.	0.0		0.0		800	N.
17	0.8	0.8	Cu.Cb.	0.0		0.0		1000	N.
18	0.8	0.8	Cu.Cb.	0.0		0.0		1200	N.
19	0.6	0.6	Cu.	0.0		0.0			N.
20	0.9	0.9	Cu.Cb.	-.-	Ac.	0.0		1200	N.
21	1.0	1.0	Cu.Cb.	-.-	Ac.	0.0		800	N.
22	1.0	1.0	Cu.Cb.	0.0		0.0		800	N.
23	0.7	0.7	Cu.Cb.	0.0		0.0		1200	N.
24	0.9	0.9	Cu.Cb.	0.0		0.0		800	
25	0.9	0.9	Cu.Cb.	-.-	As	0.0			
26	0.9	0.9	Cu.Cb.	0.0		0.0		1200	N.
27	0.7	0.3	Cu.Cb.	0.7	Ac.As.	0.0		2500	N.
28	0.5	0.5	Cu.Cb.	-.-	Ac.	0.0		1200	N.
29	0.9	0.9	Cu.Cb.	-.-	As.	0.0		1500	N.
30	0.6	0.6	Cb Cu.	-.-	Ac.	0.0		1500	N.
..	...	...	.....	...	..	...		....	..

JULIO 1945

RESUMEN MENSUAL	
TEMPERATURA en °C.:	
Media	18.7
Máxima día 15	27.6
Mínima día 2 y 27	14.0
PRESION ATMOSFERICA reducida a Temperatura Standard:	
Media	640.6
Máxima día 1	642.9
Mínima día 28	637.8
HUMEDAD RELATIVA en %:	
Media	85
Mínima día 21	46
PUNTO DE ROCIO en °C.:	
Medio	16.0
TENSION DEL VAPOR DE AGUA DE LA ATMOSFERA en mm:	
Medio	13.80
LLUVIA:	
Días con lluvia apreciable	17
Días con lluvia inapreciable	3
Cantidad registrada en el mes en mm	223.0
EVAPORACION EN LA SOMBRA en mm.:	
Total en el mes	115.9
VIENTO:	
Velocidad media en km/h	15.8
Velocidad máxima en km/h día 2, 7 y 11	38.0
Presión máxima en kg/m²	13.6
Recorrido total de kilómetros en el mes	11720.0
Dirección dominante	NNE
TEMPERATURA DEL SUBSUELO en °C. y a 30 cms:	
Media	21.6
INSOLACION:	
Total de horas y décimos	182.8
ESTADO DEL TIEMPO:	
Número de días nublados	17
Número de días medio nublados	12
Número de días despejados	2

JULIO 1945

TEMPERATURA A LA SOMBRA EN °C.							
Días	7h.	13h.	19h.	Máxima	Mínima	Oscilación	Media
1	16.2	23.5	19.0	24.0	14.5	9.5	18.3
2	16.1	21.5	18.1	23.2	14.0	9.2	18.2
3	16.4	22.0	17.5	23.4	15.1	8.3	18.0
4	15.5	22.8	18.5	23.7	15.0	8.7	18.3
5	16.5	23.2	19.2	24.1	15.5	8.6	19.0
6	16.5	23.2	18.8	24.2	15.0	9.2	18.8
7	16.3	21.6	16.8	22.1	15.3	6.8	17.6
8	15.1	21.5	17.6	22.6	15.7	6.9	18.3
9	17.0	23.0	18.7	24.8	14.5	10.3	18.8
10	16.4	23.5	19.2	25.0	15.0	10.0	19.1
11	17.4	23.7	20.0	25.5	15.3	10.2	19.4
12	17.1	24.0	19.9	25.5	14.1	11.4	19.3
13	17.9	23.6	21.0	25.6	15.0	10.6	19.9
14	17.2	25.0	19.0	26.1	15.5	10.6	19.7
15	17.0	25.0	19.5	27.6	16.5	11.1	19.9
16	16.8	25.0	18.7	27.0	16.0	11.0	19.1
17	16.7	24.4	16.5	26.8	14.7	12.1	18.1
18	17.5	20.8	17.8	23.8	15.6	8.2	18.2
19	17.0	24.0	20.3	24.9	14.9	10.0	19.0
20	17.9	24.0	18.0	25.1	16.4	8.7	19.5
21	17.0	24.0	18.8	26.1	15.7	10.4	19.5
22	17.0	22.0	17.0	23.5	16.1	7.4	18.2
23	16.5	22.2	20.0	23.9	15.7	8.2	18.8
24	15.9	23.0	19.5	24.2	14.4	9.8	18.7
25	16.4	23.3	18.8	23.3	14.1	9.2	18.1
26	16.1	22.9	18.5	24.0	14.1	9.9	18.4
27	15.4	24.5	19.0	26.5	14.0	12.5	18.8
28	17.1	22.9	18.4	24.0	15.3	8.7	18.1
29	16.0	20.5	17.7	23.0	15.7	7.3	18.1
30	16.0	19.0	16.4	24.7	15.0	9.7	17.5
31	15.5	21.5	18.3	23.4	14.4	9.0	17.9
Máxima	17.9	25.0	21.0	27.6			
Mínima	15.1	19.0	16.4		14.0		
Oscil.	2.8	6.0	4.6			13.6	
Media	16.6	23.0	18.6				18.7

JULIO 1945

PRESION ATMOSFERICA REDUCIDA A TEMPERATURA STANDARD							
Días	7h.	13h.	19h.	Máxima	Mínima	Oscilación	Media
1	642.1	641.4	641.4	642.9	639.9	3.0	641.5
2	641.2	641.2	640.7	642.7	639.8	2.9	641.1
3	640.5	640.8	640.4	641.9	639.6	2.3	640.8
4	641.2	641.3	641.4	642.3	639.9	2.4	641.2
5	641.5	640.9	640.7	642.2	639.6	2.6	640.9
6	641.5	640.9	640.4	642.4	639.8	2.6	640.9
7	641.4	641.4	641.0	642.1	639.8	2.3	641.1
8	641.6	640.8	640.9	642.4	640.4	2.0	641.3
9	642.0	641.6	640.9	642.6	640.3	2.3	641.5
10	641.0	641.9	640.3	641.9	639.7	2.2	640.8
11	640.6	640.9	640.5	641.5	639.7	1.8	640.6
12	641.4	640.8	640.8	641.7	639.8	1.9	640.8
13	641.2	640.6	640.2	641.8	639.3	2.5	640.7
14	640.6	639.6	639.6	640.9	638.7	2.2	640.1
15	640.4	639.6	639.0	640.7	638.2	2.5	639.6
16	640.8	639.6	639.0	640.8	638.1	2.7	639.9
17	640.8	639.4	639.9	640.8	639.0	1.8	640.0
18	640.0	639.7	639.8	641.0	638.8	2.2	639.8
19	642.5	640.0	639.8	642.5	639.0	3.5	640.1
20	641.3	640.6	640.3	641.8	639.4	2.4	640.7
21	641.1	640.0	640.0	641.5	638.6	2.9	640.6
22	640.6	639.7	639.5	641.5	638.2	3.3	639.9
23	641.0	640.4	639.4	641.5	638.6	2.9	640.1
24	641.3	641.6	641.1	642.5	640.3	2.2	641.1
25	641.4	641.0	640.7	642.2	639.8	2.4	641.0
26	641.1	640.5	640.1	641.6	639.4	2.2	640.5
27	640.4	639.5	639.2	641.2	638.0	3.2	639.7
28	640.0	639.9	638.6	640.4	637.8	2.6	639.1
29	639.7	639.4	639.9	641.8	638.6	3.2	639.8
30	641.1	640.1	640.9	642.3	640.0	2.3	641.0
31	641.6	640.5	640.6	642.2	640.0	2.2	641.0
Máxima	642.5	641.9	641.4	642.9			
Mínima	639.7	639.4	638.6		637.8		
Oscil.	2.8	2.5	2.8			5.1	
Media	641.0	640.5	640.2				640.6

JULIO 1945

	HUMEDAD RELATIVA					PUNTO DE ROCIO	TENSION VAPOR
Días	7h.	13h.	19h.	Mínima	Media	Medio	Media
	%	%	%	%	%	°C.	mm.
1	93	64	91	57	86	16.2	15.90
2	82	73	95	69	85	15.4	13.36
3	92	61	87	54	82	14.8	12.65
4	95	72	95	60	87	16.7	14.24
5	95	65	85	61	82	16.3	13.89
6	91	62	93	53	83	16.1	13.73
7	92	71	93	67	85	15.6	13.33
8	94	70	77	54	85	15.0	12.84
9	91	66	85	63	84	16.2	13.85
10	91	66	78	49	79	15.3	13.01
11	91	62	82	55	81	12.6	13.80
12	86	55	82	49	79	15.3	13.05
13	85	57	82	53	79	15.9	13.61
14	93	58	91	53	82	16.6	14.16
15	91	62	94	45	82	16.9	14.62
16	90	62	94	54	86	16.6	14.23
17	95	53	95	50	89	15.1	12.90
18	97	70	93	67	89	16.1	13.78
19	95	64	93	60	87	17.4	14.97
20	94	67	91	57	83	17.0	14.54
21	94	66	89	46	83	16.7	14.28
22	95	64	95	64	89	17.3	14.80
23	96	75	96	63	89	17.6	15.16
24	95	70	63	58	82	14.9	12.78
25	97	66	93	55	85	16.9	14.44
26	90	67	79	53	82	15.2	13.00
27	94	61	94	53	86	16.4	14.00
28	97	71	96	64	91	17.3	14.82
29	92	65	85	68	90	16.5	14.22
30	92	67	90	61	90	14.5	12.45
31	96	71	88	68	89	15.8	13.46
Máxima	97	95	96				
Mínima	82	53	63	46			
Oscil.	15	42	33				
Media	92	67	89		85	16.0	13.80

JULIO 1945

	PRECIPITACION			EVAPORACION
Días	Cantidad	Duración	Intensidad	En la sombra
	mms.	Horas	mms/h.	mms.
1	5.8	3.0	1.9	3.9
2	11.8	2.0	5.9	4.7
3	Inap	Inap	Inap	4.4
4	1.2	1.3	1.0	5.0
5	0.0	0.0	0.0	3.5
6	Inap	Inap	Inap	5.1
7	3.7	1.0	3.7	4.7
8	5.3	1.8	2.9	3.0
9	1.3	0.8	1.6	3.0
10	0.0	0.0	0.0	5.0
11	0.0	0.0	0.0	6.0
12	0.0	0.0	0.0	5.2
13	0.0	0.0	0.0	5.5
14	0.0	0.0	0.0	5.5
15	0.0	0.0	0.0	4.0
16	4.0	2.0	2.0	3.5
17	0.5	0.8	0.6	3.0
18	1.0	0.8	1.2	2.0
19	0.0	0.0	0.0	2.5
20	20.4	3.0	6.8	2.5
21	2.1	2.0	1.0	3.5
22	0.0	0.0	0.0	4.2
23	30.1	9.5	3.4	2.3
24	Inap	Inap	Inap	2.5
25	0.0	0.0	0.0	2.5
26	2.4	0.5	4.8	4.2
27	0.0	0.0	0.0	4.9
28	41.8	6.2	6.8	3.5
29	18.0	3.8	4.7	2.0
30	10.5	4.8	2.2	1.8
31	63.1	8.0	7.9	2.5
Total	223.0	51.3		115.9

JULIO 1945

VIENTOS					
Días	Velocidad media	Velocidad máxima	Presión máxima	Recorrido total	Dirección Dominante
	kms.	kms.	kg/m²	kms.	
1	19.8	31.0	9.0	475	NNE
2	23.4	38.0	13.6	560	NNE
3	25.6	34.0	10.9	615	NNE
4	15.6	19.0	3.4	375	NNE
5	24.0	28.0	7.4	575	NNE
6	25.6	36.0	12.2	615	NNE
7	25.8	38.0	13.6	620	NNE
8	17.5	24.0	5.4	420	NNE
9	22.9	31.0	9.0	550	NNE
10	21.2	36.0	12.2	510	NNE
11	22.0	35.0	11.5	530	NNE
12	22.7	38.0	13.6	545	NNE
13	21.9	30.0	8.5	520	NNE
14	12.9	18.0	2.9	310	NNE
15	6.9	17.0	2.7	165	NNE
16	10.4	19.0	3.4	250	NNE
17	8.8	35.0	11.5	215	NNE/SSW
18	10.6	22.0	4.6	255	NNE/SSW
19	8.4	12.0	1.4	200	NNE/SSW
20	12.5	22.0	4.6	300	NNE
21	14.8	26.0	6.4	355	NNE
22	10.8	22.0	4.6	260	NNE
23	7.3	21.0	4.5	175	NNE/SSW
24	7.7	16.0	2.4	185	NNE
25	20.0	32.0	9.6	480	NNE
26	19.8	26.0	6.4	475	NNE
27	12.5	18.0	2.9	300	NNE
28	6.7	18.0	2.9	160	NNE
29	6.7	16.0	4.7	160	NNE
30	7.1	20.0	3.8	170	NNE
31	16.4	22.0	4.6	395	NNE
Media	15.8				
Máxima		38.0			
Presión			13.6		
Total				11720	
Dominante					NNE

JULIO 1945

Días	TEMPERATURA DEL SUBSUELO A 30 cms. DE PROFUNDIDAD 7h.	13h.	19h.	Media	INSOLACION Horas de sol	Fracción de insol.
	°C.	°C.	°C.	°C.	hs.	%
1	21.5	21.6	21.6	21.6	8.0	62
2	21.5	21.7	21.6	21.6	7.0	54
3	21.5	21.5	21.6	21.5	4.6	35
4	21.4	21.5	21.5	21.5	3.1	24
5	21.3	21.4	21.4	21.4	7.2	55
6	21.3	23.4	23.4	23.4	7.0	54
7	21.3	21.4	21.4	21.4	4.1	32
8	21.3	21.4	21.5	21.4	2.4	18
9	21.3	21.5	21.4	21.4	10.2	78
10	21.3	21.4	21.4	21.4	9.0	69
11	21.4	21.5	21.5	21.5	8.1	62
12	21.4	21.5	21.5	21.5	11.3	87
13	21.4	21.5	21.5	21.5	8.7	67
14	21.4	21.5	21.6	21.5	7.2	55
15	21.5	21.6	21.5	21.5	5.8	45
16	21.5	21.6	21.5	21.5	5.1	39
17	21.5	21.6	21.6	21.6	4.5	35
18	21.5	21.6	21.5	21.5	1.4	11
19	21.4	21.5	21.6	21.5	4.0	31
20	21.5	21.6	21.6	21.6	8.2	64
21	21.6	21.6	21.5	21.6	6.5	50
22	21.5	21.6	21.5	21.5	3.1	24
23	21.5	21.6	21.5	21.5	3.0	24
24	21.5	21.6	21.7	21.6	3.8	29
25	21.6	21.7	21.8	21.7	7.0	54
26	21.7	21.8	21.7	21.7	9.2	72
27	21.7	21.8	21.8	21.8	7.0	54
28	21.6	21.7	21.7	21.7	2.6	20
29	21.7	21.7	21.6	21.7	3.7	29
30	21.6	21.6	21.6	21.6	6.0	46
31	21.6	21.7	21.7	21.7	4.0	31
Máxima	21.7	23.4	23.4		11.3	87
Mínima	21.3	21.4	21.4		1.4	11
Oscil.	.4	2.0	2.0			
Media	21.5	21.6	21.6	21.6	5.9	46
Total					182.8	

JULIO 1945

NEBULOSIDAD									
T.U. del Merid. 90 W					1200				
Días	N	GENERO DE NUBES						h_L	D_L
		N_L	C_L	N_M	C_M	N_H	C_H		
1	0.5	0.5	Cu.Cb.	-.-	Ac.	0.0		1000	N.
2	0.6	0.4	Cu.	0.4	Ac.	0.0		1500	N.
3	0.7	0.5	Cu.Cb.	0.5	Ac.	0.0		800	N.
4	0.7	0.7	Sc.Cu.	V	Ac.	0.0		600	N.
5	0.6	0.6	Cu.Cb.	0.0		0.0		800	N.
6	0.6	0.5	Cu.Cb.	0.3	Ac.	0.0		1000	N.
7	0.8	0.7	Cu.Cb.	-.-	Ac.	V	Ci.	1200	N.
8	0.8	0.8	Cu.Cb.	-.-	Ac.	0.0		800	N.
9	0.4	0.4	Cu.Cb.	V	Ac.	0.0		1200	N.
10	0.4	0.4	Cu.Cb.	V	Ac.	0.0		800	N.
11	0.4	0.3	Cu.Cb.	0.1	Ac.	0.0			N.
12	0.3	0.3	Cu.	0.2	Ac.	V	Ci.		N.
13	0.4	0.4	Cu.	V	Ac.	0.0			N.
14	0.6	0.4	Cu.Cb.	0.4	Ac.As.	0.2	Cs.	800	N.
15	0.8	0.7	Cu.Cb.	0.6	Ac.	0.0		800	N.
16	0.8	0.5	Cu.Cb.	0.4	Ac.	0.0		1500	N.
17	0.4	0.4	Cb.	0.0		0.0		1500	S.
18	0.9	0.7	Cb.	0.8	As.	0.0		1200	S.
19	0.8	0.6	Cu.Cb.	-.-	As.	-.-	Cs.	1500	S.
20	0.6	0.5	Cu.Cb.	0.3	Ac.As.	-.-	Ci.	1200	N.
21	0.5	0.3	Cu.	0.4	Ac.	V	Ci.	1500	N.
22	1.0	1.0	Cu.Cb.	0.0		0.0		800	N.
23	0.6	0.6	Cu.Cb.	0.4	Ac.	0.0		1200	N.
24	0.6	0.6	Cu.Cb.	0.0		0.0		1200	N.
25	0.5	0.3	Cu.Cb.	0.3	Ac.	-.-	Ci.	1800	N.
26	0.4	0.4	Cu.	-.-	Ac.	-.-	Ci.	1200	N.
27	0.8	0.8	Cu.Cb.	0.0		0.0		800	N.
28	1.0	1.0	Cu.Cb.	-.-	Ac.	0.0		1000	N.
29	1.0	1.0	Cu.Cb.	0.0		0.0		800	N.
30	1.0	0.4	Cu.Cb.	1.0	As.	0.0		800	N.
31	0.8	0.8	Cu.Cb.	-.-	Ac.As.	0.0		1000	N.

AGOSTO 1945

RESUMEN MENSUAL	
TEMPERATURA en °C.:	
Media	18.5
Máxima día 8	27.5
Mínima día 21	13.7
PRESION ATMOSFERICA reducida a Temperatura Standard:	
Media	640.0
Máxima día 1	642.2
Mínima día 31	637.0
HUMEDAD RELATIVA en %:	
Media	87
Mínima día 6 y 18	46
PUNTO DE ROCIO en °C.:	
Medio	16.6
TENSION DEL VAPOR DE AGUA DE LA ATMOSFERA en mm:	
Medio	14.20
LLUVIA:	
Días con lluvia apreciable	24
Días con lluvia inapreciable	2
Cantidad registrada en el mes en mm.....	213.4
EVAPORACION EN LA SOMBRA en mm.:	
Total en el mes	85.3
VIENTO:	
Velocidad media en km/h	12.7
Velocidad máxima en km/h día 15	32.0
Presión máxima en kg/m^2.....	9.6
Recorrido total de kilómetros en el mes	9390.0
Dirección dominante	NNE
TEMPERATURA DEL SUBSUELO en °C. y a 30 cms:	
Media	21.6
INSOLACION:	
Total de horas y décimos	215.4
ESTADO DEL TIEMPO:	
Número de días nublados	16
Número de días medio nublados	12
Número de días despejados	3

AGOSTO 1945

TEMPERATURA A LA SOMBRA EN °C.							
Días	7h.	13h.	19h.	Máxima	Mínima	Oscilación	Media
1	16.5	22.5	18.7	23.3	15.5	7.8	18.0
2	16.9	22.5	18.0	24.2	15.6	8.6	18.3
3	16.5	23.0	20.0	24.8	14.0	10.8	18.7
4	16.0	22.6	17.3	23.2	14.7	8.5	17.6
5	16.7	23.4	18.4	24.6	15.8	8.8	18.6
6	16.4	24.1	21.0	25.3	15.2	10.1	19.8
7	17.0	24.0	21.3	25.5	14.2	11.3	19.6
8	15.6	25.3	19.1	27.5	13.9	13.6	19.5
9	17.8	24.0	17.6	24.6	16.5	8.1	18.1
10	16.6	22.0	17.0	23.8	15.7	8.1	18.2
11	17.0	23.5	18.2	25.0	14.6	10.4	18.6
12	16.1	23.7	19.5	25.2	14.9	10.3	19.5
13	17.1	23.8	19.2	25.3	16.0	9.3	19.5
14	17.5	16.6	18.1	24.0	15.6	8.4	18.2
15	18.5	23.5	18.5	24.2	14.7	9.5	18.7
16	18.0	22.0	18.0	23.2	15.2	8.0	18.5
17	16.8	22.5	13.2	23.4	15.8	7.6	17.8
18	16.5	21.6	18.0	23.2	14.7	8.5	18.4
19	15.0	18.5	16.0	20.0	14.9	5.1	16.5
20	15.4	18.5	16.3	22.2	14.8	7.4	16.9
21	15.0	22.7	18.2	24.3	13.7	10.6	18.1
22	17.0	20.8	18.0	24.0	15.5	8.5	18.6
23	16.4	20.0	19.0	23.8	15.8	8.0	18.4
24	17.0	23.0	17.5	25.2	16.0	9.2	18.8
25	16.7	24.5	18.0	25.2	14.5	10.7	18.5
26	17.0	23.8	19.0	24.8	16.0	8.8	19.3
27	17.0	25.0	18.6	25.5	15.8	9.7	18.9
28	17.5	24.2	17.7	25.5	16.1	9.4	18.8
29	16.9	20.0	17.3	24.6	15.6	9.0	18.1
30	17.0	23.8	19.0	25.2	15.5	9.7	19.3
31	16.0	23.0	17.4	24.6	14.7	9.9	18.6
Máxima	18.5	25.3	21.3	27.5			
Mínima	15.0	16.6	13.2		13.7		
Oscil.	3.5	8.7	8.1			13.8	
Media	16.7	22.5	18.2				18.5

AGOSTO 1945

PRESION ATMOSFERICA REDUCIDA A TEMPERATURA STANDARD							
Días	7h.	13h.	19h.	Máxima	Mínima	Oscilación	Media
1	641.1	641.1	639.7	642.2	639.7	2.5	641.0
2	641.1	640.5	640.8	641.7	639.5	2.2	640.7
3	641.1	640.4	639.7	641.4	638.6	2.8	641.3
4	640.6	639.8	640.4	641.3	639.1	2.2	641.2
5	641.2	640.8	640.5	641.6	639.5	2.1	640.7
6	640.9	640.8	639.8	641.4	639.4	2.0	640.4
7	640.4	640.7	639.8	641.3	639.0	2.3	640.2
8	640.9	640.6	639.6	640.9	638.6	2.3	640.2
9	640.2	639.6	639.1	640.9	638.9	2.0	639.6
10	639.3	639.4	639.2	640.4	638.2	2.2	639.6
11	639.4	638.8	639.5	640.3	637.6	2.7	639.1
12	639.9	639.8	639.0	640.5	638.0	2.5	639.4
13	640.2	639.9	640.0	640.9	638.8	2.1	639.1
14	640.8	640.9	640.4	641.5	639.4	2.1	640.5
15	640.8	640.3	640.2	641.5	639.0	2.5	640.4
16	640.8	640.8	639.9	641.6	639.4	2.2	640.4
17	640.8	640.6	640.5	641.6	638.9	2.7	640.4
18	640.3	639.9	639.4	641.0	638.6	2.4	639.8
19	640.0	640.0	639.5	640.6	638.8	1.8	639.5
20	640.2	640.0	639.9	640.6	638.8	1.8	639.6
21	639.7	640.0	639.6	640.7	638.7	2.0	639.6
22	640.4	639.9	639.9	640.7	638.8	1.9	640.0
23	640.2	639.9	639.4	641.0	639.0	2.0	639.9
24	640.8	639.9	640.0	641.0	638.8	2.2	640.1
25	639.3	640.1	639.9	641.2	639.0	2.2	640.1
26	640.4	639.8	639.8	641.4	638.1	3.3	639.8
27	640.6	639.9	640.1	641.1	639.3	1.8	640.2
28	640.4	639.8	639.9	640.9	638.9	2.0	640.0
29	639.9	639.4	639.3	640.9	638.7	2.2	639.8
30	639.5	639.5	639.7	640.9	638.0	2.9	639.5
31	639.2	638.3	638.4	640.2	637.0	3.2	638.8
Máxima	641.2	641.1	640.8	642.2			
Mínima	639.2	638.3	638.4		637.0		
Oscil.	2.0	2.8	2.4			5.2	
Media	640.3	640.0	639.8				640.0

AGOSTO 1945

	HUMEDAD RELATIVA					PUNTO DE ROCIO	TENSION VAPOR
Días	7h.	13h.	19h.	Mínima	Media	Medio	Media
	%	%	%	%	%	°C.	mm.
1	95	71	94	67	89	17.1	14.40
2	92	66	91	64	87	16.0	13.64
3	92	64	90	56	81	16.5	14.11
4	95	79	95	68	90	16.9	14.48
5	94	68	96	65	90	16.9	14.42
6	94	57	76	46	78	15.7	13.40
7	83	61	73	52	76	15.4	13.17
8	94	57	92	49	83	16.2	13.89
9	86	61	94	55	89	16.0	13.68
10	97	80	86	65	89	16.4	14.05
11	93	74	96	58	87	17.3	14.83
12	94	66	87	55	81	16.5	14.10
13	94	71	96	59	84	17.9	15.14
14	95	94	92	65	89	16.4	14.00
15	94	64	96	60	82	17.2	14.70
16	95	69	82	55	82	17.2	13.78
17	94	73	90	65	92	14.9	12.84
18	91	72	55	46	83	13.4	11.75
19	97	89	97	83	93	15.6	13.31
20	99	97	97	80	94	16.1	14.02
21	97	73	96	72	90	16.6	14.20
22	92	89	96	64	90	17.3	14.85
23	98	96	96	66	91	17.6	15.43
24	98	70	95	59	88	16.9	14.46
25	92	80	97	61	88	17.9	15.56
26	95	66	97	62	87	17.3	14.88
27	95	62	97	56	89	17.2	14.73
28	95	70	94	61	89	17.3	14.77
29	95	96	97	63	91	17.5	15.00
30	95	64	97	61	86	17.3	14.84
31	90	67	96	54	81	15.9	13.66
Máxima	99	97	97				
Mínima	86	57	55	46			
Oscil.	13	40	42				
Media	94	73	91		87	16.6	14.20

AGOSTO 1945

	PRECIPITACION			EVAPORACION
Días	Cantidad	Duración	Intensidad	En la Sombra
	mms.	Horas	mms/h.	mms.
1	4.0	0.5	8.0	2.4
2	0.8	0.1	8.0	2.8
3	1.8	1.0	1.8	3.4
4	32.2	4.2	7.7	4.3
5	20.7	2.5	8.3	1.8
6	0.0	0.0	0.0	3.0
7	0.0	0.0	0.0	5.5
8	0.0	0.0	0.0	5.4
9	11.0	0.7	1.8	3.8
10	5.0	6.5	0.8	0.1
11	0.0	0.0	0.0	2.8
12	13.8	6.0	2.3	1.9
13	0.0	0.0	0.0	4.4
14	1.4	1.0	1.4	4.3
15	32.6	3.0	10.8	2.1
16	1.0	0.5	2.0	4.2
17	4.6	1.8	2.6	4.0
18	14.5	5.5	2.6	1.8
19	Inap	Inap	Inap	3.5
20	6.8	6.0	1.1	1.0
21	5.2	3.2	1.6	2.1
22	Inap	Inap	Inap	2.4
23	6.8	3.5	1.9	2.0
24	0.7	0.3	2.3	1.7
25	13.6	8.2	1.7	2.0
26	1.1	0.8	1.4	1.9
27	5.5	3.5	1.6	2.0
28	3.3	2.2	1.5	2.0
29	15.2	2.5	6.1	2.0
30	11.3	6.8	1.7	1.9
31	0.5	0.2	1.5	2.8
Total	213.4	70.5		85.3

AGOSTO 1945

VIENTOS					
Días	Velocidad media	Velocidad máxima	Presión máxima	Recorrido total	Dirección dominante
	kms.	kms.	kg/m^2	kms.	
1	22.3	26.0	6.4	535	NNE
2	22.7	26.0	4.6	545	NNE
3	18.3	26.0	4.6	440	NNE
4	9.2	21.0	4.2	220	NNE
5	9.2	20.0	3.8	220	NNE
6	18.5	22.0	4.6	445	NNE
7	18.5	28.0	7.4	445	NNE
8	11.2	16.0	2.4	270	NNE
9	11.4	21.0	4.3	250	NNE
10	12.1	28.0	7.4	290	NNE
11	6.0	18.0	2.9	145	NNE
12	16.0	24.0	5.4	385	NNE
13	19.4	27.0	6.9	465	NNE
14	13.5	22.0	4.6	325	NNE
15	19.1	32.0	9.7	460	NNE
16	19.4	25.0	5.9	465	NNE
17	12.9	21.0	4.3	310	NNE
18	14.6	20.0	3.8	350	NNE
19	10.2	16.0	2.4	245	NNE
20	12.5	28.0	7.4	300	NNE
21	9.6	24.0	5.4	230	NNE
22	9.6	23.0	5.0	230	NNE
23	6.4	16.0	2.4	150	NNE/SSW
24	9.4	24.0	5.4	225	NNE/SSW
25	8.1	15.0	2.1	195	NNE/SSW
26	7.8	16.0	2.4	185	NNE/SSW
27	9.2	17.0	2.7	220	SSW
28	9.8	17.0	2.7	235	NNE/SSW
29	8.9	11.0	1.1	165	NNE/SSW
30	10.0	17.0	2.7	240	NNE
31	8.5	21.0	4.3	205	NNE
Media	12.7				
Máxima		32.0			
Presión			9.6		
Total				9390	
Dominante					NNE

AGOSTO 1945

Días	TEMPERATURA DEL SUBSUELO A 30 cms. DE PROFUNDIDAD 7h.	13h.	19h.	Media	INSOLACION Horas de sol	Fracción de insol.
	°C.	°C.	°C.	°C.	hs.	%
1	21.6	21.7	21.7	21.7	3.8	30
2	21.7	21.8	21.7	21.7	6.1	48
3	21.7	21.8	21.8	21.8	9.2	72
4	21.7	21.8	21.8	21.8	4.0	31
5	21.7	21.8	21.9	21.8	4.3	34
6	21.7	21.8	21.9	21.8	9.7	76
7	21.8	21.9	21.9	21.9	11.0	86
8	21.8	21.9	21.9	21.9	8.0	62
9	21.9	22.0	22.0	22.0	5.3	41
10	21.9	22.0	21.9	21.9	4.5	35
11	21.7	21.8	21.8	21.8	7.5	58
12	21.7	21.8	21.8	21.8	10.8	84
13	21.7	21.8	21.8	21.8	10.0	78
14	21.8	21.9	21.9	21.9	6.5	51
15	21.8	21.9	21.8	21.8	10.5	82
16	21.7	21.8	21.7	21.7	10.0	78
17	21.7	21.7	21.6	21.7	5.2	40
18	21.7	21.7	21.6	21.7	9.3	74
19	21.6	21.7	21.6	21.6	1.5	12
20	21.6	21.7	21.5	21.6	4.5	35
21	21.4	21.5	21.4	21.4	8.1	63
22	21.3	21.4	21.4	21.4	5.3	41
23	21.2	21.3	21.1	21.2	5.3	41
24	21.3	21.3	21.2	21.3	6.0	47
25	21.1	21.1	21.1	21.1	7.2	56
26	21.0	21.1	21.1	21.1	6.7	52
27	21.0	21.1	21.1	21.1	7.0	55
28	21.0	21.1	21.1	21.1	7.8	61
29	21.0	21.1	21.0	21.0	5.5	43
30	21.0	21.1	21.0	21.0	7.6	59
31	21.0	21.2	21.1	21.1	7.2	57
Máxima	21.9	22.0	22.0		11.0	86
Mínima	21.0	21.1	21.0		1.5	12
Oscil.	.9	.9	1.0			
Media	21.5	21.6	21.6	21.6	6.9	54
Total					215.4	

AGOSTO 1945

NEBULOSIDAD									
T.U. del Merid. 90 W					1200				
Días	N	GENERO DE NUBES						h_L	D_L
		N_L	C_L	N_M	C_M	N_H	C_H		
1	0.8	0.6	Cu.Cb.	0.8	Ac.As.	0.0		800	N.
2	0.8	0.8	Cu.Cb.	-.-	Ac.	-.-	Ci.	1200	N.
3	0.8	0.4	Cu.	0.6	As.	0.2	Ci.	1500	N.
4	0.6	0.6	Cu.Cb.	-.-	Ac.	-.-	Ci.	800	N.
5	0.6	0.6	Cu.Cb.	0.0		0.0		600	N.
6	0.4	0.4	Cu.Cb.	0.0		0.0		1200	N.
7	0.5	0.4	Cu.Cb.	0.3	Ac.	0.0		1500	N.
8	0.6	0.6	Cu.	0.0		0.0		1000	N.
9	0.6	0.6	Cu.Cb.	0.0		0.0		1200	N.
10	0.4	0.4	Cu.Cb.	-.-	Ac.	0.0		1200	
11	0.6	0.6	Cu.Cb.	-.-	As.	0.0		800	N.
12	0.3	0.0		0.3	Ac.	-.-	Ci.		
13	0.3	0.3	Cu.Cb.	V	Ac.	0.0		1200	N.
14	1.0	1.0	Sc.Ns.	0.0		0.0		600	N.
15	0.1	0.1	Cu.	0.0		V	Ci.		
16	0.6	0.6	Cu.Cb.	0.0		0.0		1000	N.
17	1.0	1.0	Sc.Cu.	0.0		0.0		850	N.
18	0.5	0.4	Cu.Cb.	0.2	Ac.	0.0		1000	N.
19	0.6	0.6	Sc.Cu.	0.0		0.0		800	N.
20	1.0	1.0	Cu.Cb.	-.-	Ac.	0.0		700	N.
21	0.7	0.4	Sc.Cu.	0.7	Ac.As.	0.0		1200	N.
22	0.6	0.4	Sc.Cu.	0.4	As.	0.0		1800	N.
23	0.8	0.8	Cb.Ns.	0.0		0.0		600	S.
24	0.8	0.8	Cu.Cb.	0.0		0.0		800	S.
25	1.0	1.0	Cu.Cb.	-.-	As.Ac.	0.0		800	S.
26	1.0	1.0	Cu.Cb.	-.-	As.	0.0		1500	N.
27	0.9	0.9	Cu.Cb.	0.0		0.0		800	N.
28	1.0	1.0	Cu.Cb.	-.-	Ac.	0.0		800	N.
29	1.0	1.0	Cu.Cb.	0.0		0.0		800	N.
30	0.7	0.7	Cu.Cb.	0.4	Ac.As.	0.0		1500	S.
31	0.8	0.6	Cu.Cb.	0.8	Ac.As.	0.0		1000	N.

RESUMEN MENSUAL

TEMPERATURA en °C.:	
Media	18.3
Máxima día 11	25.8
Mínima día 8	14.0
PRESION ATMOSFERICA reducida a Temperatura Standard:	
Media	639.5
Máxima día 9, 18 y 19	641.7
Mínima día 29 y 30	634.3
HUMEDAD RELATIVA en %:	
Media	88
Mínima día 23 y 24	55
PUNTO DE ROCIO en °C.:	
Medio	16.5
TENSION DEL VAPOR DE AGUA EN LA ATMOSFERA en mm:	
Medio	14.14
LLUVIA:	
Días con lluvia apreciable	21
Días con lluvia inapreciable	0
Cantidad registrada en el mes en mm.	256.2
EVAPORACION EN LA SOMBRA en mm.:	
Total en el mes	83.1
VIENTO:	
Velocidad media en km/h	13.1
Velocidad máxima en km/h día 30	38.0
Presión máxima en kg/m²	13.6
Recorrido total de kilómetros en el mes	9475.0
Dirección dominante	NNE
TEMPERATURA DEL SUBSUELO en °C. y a 30 cm.:	
Media	21.1
INSOLACION:	
Total de horas y décimos	195.8
ESTADO DEL TIEMPO:	
Número de días nublados	17
Número de días medio nublados	13
Número de días despejados	0

SEPTIEMBRE 1945

TEMPERATURA A LA SOMBRA EN °C.							
Días	7h.	13h.	19h.	Máxima	Mínima	Oscilación	Media
1	17.0	19.4	17.0	21.1	15.6	5.5	17.5
2	16.1	22.1	17.5	22.6	15.8	6.8	17.7
3	17.0	21.5	18.2	23.4	15.6	7.8	18.6
4	16.8	24.5	16.4	25.7	15.5	10.2	18.2
5	17.0	23.2	17.0	24.2	15.6	8.6	18.4
6	16.7	24.8	17.8	24.2	15.6	8.6	18.7
7	17.3	23.3	17.5	24.6	16.3	8.3	19.0
8	15.9	22.8	18.5	24.0	14.0	10.0	18.0
9	15.0	22.2	18.1	23.9	14.8	9.1	18.4
10	16.3	24.0	20.0	24.5	15.0	8.9	19.5
11	18.2	24.7	16.0	25.8	15.5	10.3	19.3
12	17.7	24.1	16.4	24.6	15.1	9.5	18.0
13	16.3	21.3	17.5	24.7	14.8	9.9	17.8
14	16.5	24.1	17.2	24.4	15.5	8.9	18.1
15	16.2	25.4	18.0	25.3	15.0	10.3	18.3
16	16.5	22.0	17.0	24.4	15.3	9.1	17.8
17	17.2	22.5	17.8	23.5	15.9	7.6	18.5
18	17.2	21.3	17.0	23.0	15.5	7.5	18.4
19	17.8	22.4	17.0	23.2	14.6	8.6	18.2
20	16.7	22.6	17.8	23.4	14.6	8.8	18.3
21	16.7	22.7	19.0	24.0	14.5	9.5	18.9
22	16.8	22.0	18.0	23.1	15.7	7.4	18.4
23	16.0	23.1	17.8	24.2	15.1	9.1	18.6
24	18.0	23.5	18.5	24.0	16.0	8.0	18.9
25	17.0	24.8	19.0	24.0	14.7	9.3	18.8
26	16.5	23.0	18.0	24.5	15.0	9.5	18.6
27	17.9	22.8	17.2	23.9	15.7	8.2	18.7
28	17.5	19.0	17.0	22.1	16.0	6.1	17.6
29	17.0	19.8	17.5	20.4	16.2	4.2	17.1
30	16.0	16.0	14.5	17.2	14.5	2.7	15.6
..	....	....	....	....	....	...	....
Máxima	18.2	25.4	20.0	25.8			
Mínima	15.0	16.0	14.5		14.0		
Oscil.	3.2	9.4	5.5			11.8	
Media	16.8	22.5	17.5				18.3

SEPTIEMBRE 1945

PRESION ATMOSFERICA REDUCIDA A TEMPERATURA STANDARD							
Días	7h.	13h.	19h.	Máxima	Mínima	Oscilación	Media
1	638.1	638.3	638.9	639.6	637.6	2.0	638.5
2	639.8	639.1	639.7	640.8	638.4	2.4	639.4
3	640.8	640.5	639.6	641.3	638.8	2.5	640.2
4	640.2	639.7	639.6	640.9	638.6	2.3	640.0
5	639.9	639.6	639.7	640.7	638.6	2.1	639.8
6	640.1	639.3	639.6	641.2	638.3	2.9	639.9
7	640.2	639.9	640.1	641.2	638.6	2.6	640.0
8	640.3	639.9	639.7	641.5	638.5	3.0	640.1
9	640.2	640.4	640.6	641.7	639.6	2.1	640.7
10	640.6	640.4	639.1	641.2	638.7	2.5	640.3
11	639.4	638.9	640.8	641.1	638.6	2.5	639.9
12	640.6	639.4	639.8	641.4	639.2	2.2	640.4
13	640.4	639.8	639.6	641.4	639.3	2.1	640.5
14	639.6	639.2	638.8	641.5	638.8	2.7	640.3
15	640.0	639.1	639.5	641.3	639.0	2.3	640.2
16	640.0	639.2	639.8	641.0	639.0	2.0	640.2
17	640.3	640.6	640.0	641.5	639.2	2.3	640.5
18	641.0	640.8	640.6	641.7	639.5	2.2	640.8
19	641.0	640.4	640.0	641.7	639.2	2.5	640.4
20	639.9	639.8	639.6	640.9	638.5	2.4	639.8
21	640.0	640.0	639.6	641.1	638.5	2.6	640.0
22	640.2	639.6	639.8	640.9	638.6	2.3	639.9
23	640.8	639.8	640.0	641.0	638.8	2.2	640.2
24	640.5	640.1	639.9	641.3	638.7	2.6	640.1
25	640.4	640.0	639.4	640.8	638.5	2.3	640.0
26	639.9	639.3	638.4	640.4	637.5	2.9	639.0
27	638.4	636.8	636.7	638.8	636.1	2.7	637.4
28	636.4	636.4	635.9	637.3	635.5	1.8	636.2
29	635.6	635.0	635.0	636.1	634.3	1.8	635.1
30	635.2	635.9	636.6	637.6	634.3	3.3	635.8
..	.....	.....	.....	.....	.....	...	.....
Máxima	641.0	640.8	640.8	641.7			
Mínima	635.2	635.0	635.0		634.3		
Oscil.	5.8	5.8	5.8			7.4	
Media	639.7	639.2	639.2				639.5

SEPTIEMBRE 1945

	HUMEDAD RELATIVA					PUNTO DE ROCIO	TENSION VAPOR
Días	7h.	13h.	19h.	Mínima	Media	Medio	Media
	%	%	%	%	%	°C.	mm.
1	99	80	97	77	89	16.4	14.02
2	94	76	95	73	93	16.9	14.15
3	96	80	96	73	91	17.3	14.89
4	96	66	96	60	91	16.6	14.21
5	94	72	97	66	92	16.9	14.39
6	94	72	97	67	90	17.6	15.13
7	97	70	99	66	87	17.2	14.74
8	95	64	87	57	84	15.5	13.25
9	92	68	95	64	86	15.7	13.54
10	97	67	82	63	85	16.8	14.32
11	92	56	100	56	85	16.1	13.76
12	97	67	87	65	90	16.4	14.01
13	94	80	96	61	89	16.7	14.26
14	99	72	96	67	91	17.3	14.80
15	98	65	96	56	89	17.2	14.79
16	98	77	94	63	91	16.7	14.26
17	96	73	95	74	90	17.1	14.59
18	91	76	95	66	86	16.3	13.88
19	88	74	95	71	90	16.5	14.10
20	94	66	89	66	84	15.8	13.90
21	94	72	91	65	84	16.9	14.40
22	93	69	89	59	84	16.0	13.64
23	94	61	93	55	84	15.7	13.37
24	89	60	87	55	83	16.0	13.63
25	86	66	91	62	83	16.2	13.83
26	91	63	96	61	84	16.0	13.69
27	85	73	97	64	88	16.6	14.24
28	87	97	97	74	93	16.8	14.42
29	98	96	96	84	96	17.9	15.11
30	98	98	98	94	97	15.2	12.96
..	..	..	..	..	..	....	.....
Máxima	99	98	100				
Mínima	85	56	82	55			
Oscil.	14	42	18				
Media	94	72	94		88	16.5	14.14

SEPTIEMBRE 1945

	PRECIPITACION			EVAPORACION
Días	Cantidad	Duración	Intensidad	En la sombra
	mms.	Horas	mms/h.	mms.
1	12.6	4.2	3.0	3.0
2	1.8	1.0	1.8	2.3
3	1.8	1.8	1.0	1.4
4	21.9	5.2	4.4	3.0
5	42.7	10.2	4.3	1.9
6	60.5	12.0	5.0	1.9
7	6.8	2.5	2.7	1.6
8	0.0	0.0	0.0	2.9
9	1.4	1.2	1.2	3.5
10	0.0	0.0	0.0	2.7
11	3.9	1.8	2.2	3.4
12	0.0	0.0	0.0	4.0
13	0.8	0.3	2.7	2.0
14	4.6	2.0	2.3	1.9
15	2.6	2.6	1.0	2.5
16	14.0	2.8	5.0	2.0
17	2.6	1.8	1.4	1.6
18	2.3	0.4	5.8	2.5
19	1.9	2.4	0.8	2.8
20	10.1	1.0	10.1	2.5
21	0.0	0.0	0.0	4.5
22	0.0	0.0	0.0	3.7
23	0.0	0.0	0.0	3.6
24	0.0	0.0	0.0	4.4
25	0.0	0.0	0.0	4.2
26	0.0	0.0	0.0	4.2
27	0.5	1.8	0.3	3.3
28	5.2	1.0	1.0	3.8
29	17.0	8.0	2.5	1.2
30	41.2	9.5	4.3	0.8
..	....	...	...	...
Total	256.2	73.5		83.1

SEPTIEMBRE 1945

VIENTOS					
Días	Velocidad media	Velocidad máxima	Presión máxima	Recorrido total	Dirección dominante
	kms	kms	kg/m²	kms	
1	18.9	29.0	7.9	455	SSW
2	8.1	22.0	4.6	195	SSW
3	10.4	30.0	8.5	250	SSW
4	11.0	18.0	2.0	265	SSW
5	7.3	14.0	1.9	175	NNE/SSW
6	6.3	14.0	1.9	150	NNE
7	12.9	20.0	3.8	310	NNE
8	15.4	30.0	8.5	370	NNE
9	13.5	22.0	4.6	325	NNE
10	15.4	23.0	5.0	370	NNE
11	12.9	28.0	7.4	210	NNE
12	10.6	19.0	3.4	255	NNE
13	5.8	12.0	1.4	140	NNE
14	10.0	20.0	3.8	240	NNE
15	8.3	19.0	3.4	200	NNE
16	11.4	20.0	3.8	275	NNE
17	12.1	10.0	0.9	290	NNE
18	14.6	24.0	5.4	350	NNE
19	15.0	19.0	3.4	360	NNE
20	20.0	29.0	6.9	480	NNE
21	15.8	21.0	4.5	380	NNE
22	18.7	21.0	4.3	450	NNE
23	16.6	32.0	9.6	400	NNE
24	17.5	20.0	3.8	420	NNE
25	17.3	26.0	6.1	415	NNE
26	15.2	23.0	7.4	365	NNE
27	13.1	20.0	3.3	315	NNE
28	10.0	15.0	2.1	240	NNE/S
29	8.7	9.0	0.8	210	S
30	21.4	38.0	13.6	515	S
.	....	....	....	...	...
Media	13.1				
Máxima		38.0			
Presión			13.6		
Total				9475	
Dominante					NNE

SEPTIEMBRE 1945

Días	TEMPERATURA DEL SUBSUELO A 30 cms. DE PROFUNDIDAD 7h.	13h.	19h.	Media	INSOLACION Horas de sol	Fracción de insol.
	°C.	°C.	°C.	°C.	hs.	%
1	21.1	21.2	21.3	21.2	5.9	46
2	21.1	21.3	21.2	21.2	4.2	33
3	21.2	21.2	21.2	21.2	4.7	37
4	21.1	21.2	21.1	21.1	4.0	31
5	21.1	21.2	21.1	21.1	7.0	55
6	21.1	21.2	21.2	21.2	7.0	55
7	21.0	21.0	21.0	21.0	8.2	61
8	21.1	21.0	21.0	21.0	7.6	59
9	21.0	21.0	20.9	21.0	8.0	62
10	20.9	21.0	21.0	21.0	9.2	72
11	20.9	21.0	21.0	21.0	7.2	56
12	20.9	21.0	21.0	21.0	5.3	42
13	21.0	21.0	21.0	21.0	4.6	36
14	20.9	21.0	21.0	21.0	7.3	57
15	20.9	21.0	21.0	21.0	6.5	51
16	20.9	21.0	20.9	20.9	6.0	47
17	20.9	21.0	21.1	21.0	5.5	43
18	21.0	21.1	21.0	21.0	6.5	51
19	21.0	21.2	21.1	21.1	8.5	66
20	21.1	21.2	21.1	21.1	9.0	70
21	21.1	21.2	21.2	21.2	10.6	82
22	21.1	21.2	21.2	21.2	9.0	70
23	21.2	21.3	21.2	21.2	9.8	76
24	21.2	21.3	21.2	21.2	10.6	83
25	21.2	21.3	21.3	21.3	9.5	74
26	21.2	21.2	21.2	21.2	8.1	64
27	21.2	21.1	21.1	21.1	5.0	39
28	21.0	21.0	20.9	21.0	1.0	8
29	21.1	21.1	20.0	21.1	0.0	0
30	20.4	20.3	19.9	20.2	0.0	0
..	....	....	....	....	...	..
Máxima	21.2	21.3	21.3		10.6	83
Mínima	20.4	20.3	19.9		1.0	8
Oscil.	.8	1.0	1.4			
Media	21.0	21.1	21.0	21.1	6.5	51
Total					195.8	

SEPTIEMBRE 1945

NEBULOSIDAD									
T.U. del Merid. 90 W				1200					
Días	N	GENERO DE NUBES						h_L	D_L
		N_L	C_L	N_M	C_M	N_H	C_H		
1	0.8	0.8	Cu.Cb.	0.0		0.0		1200	N.
2	0.6	0.6	Cu.Cb.	0.0		0.0		1200	S.
3	0.6	0.6	Cu.	0.0		0.0		600	S.
4	1.0	1.0	Cu.Cb.	-.-	As.	0.0		300	S.
5	0.8	0.8	Cu.Cb.	-.-	Ac.	0.0		600	
6	0.7	0.7	Cu.Cb.	0.0		0.0		800	N.
7	0.7	0.7	Cu.Cb.	0.0		0.0		800	N.
8	0.6	0.6	Cu.Cb.	0.0		0.0		600	N.
9	0.5	0.5	Cu.	0.0		0.0		1000	N.
10	0.8	0.8	Cu.Cb.	0.0		0.0		800	N.
11	0.6	0.4	Cu.Cb.	0.3	Ac.	0.0		800	N.
12	0.8	0.8	Cu.Cb.	0.0		0.0		800	N.
13	1.0	0.4	Cu.Cb.	1.0	As.	0.0		800	N.
14	0.4	0.4	Cu.Cb.	0.0		0.0		800	N.
15	0.6	0.6	Cu.	-.-	Ac.	0.0		1200	N.
16	0.6	0.6	Cu.	-.-	Ac.	0.0			N.
17	0.5	0.0		0.5	Ac.	0.0			
18	0.8	0.4	Cu.Cb.	0.4	Ac.	0.0		800	N.
19	0.7	0.7	Cu.Cb.	0.0		0.0		1200	N.
20	0.6	0.6	Cu.Cb.	0.0		0.0		1200	N.
21	0.5	0.5	Cu.Cb.	0.3	Ac.	0.0		1000	N.
22	0.6	0.6	Cu.Cb.	0.0		0.0		1200	N.
23	0.4	0.4	Cu.	-.-	Ac.	0.0		1000	N.
24	0.5	0.3	Cu.	0.4	Ac.	V	Ci.		N.
25	0.6	0.5	Cu.Cb.	0.3	Ac.As.	0.0		1200	N.
26	0.7	0.7	Cu.Cb.	0.0		0.0		800	N.
27	0.8	0.8	Sc.Cu.Cb	0.0		0.0		800	N.
28	0.9	0.9	Cu.Cb.	0.0		0.0		600	N.
29	1.0	1.0	Sc.Ns.	0.0		0.0		200	S.
30	1.0	1.0	Ns.	0.0		0.0		200	S.
..	...	...	...	...		...		....	..

OCTUBRE 1945

RESUMEN MENSUAL	
TEMPERATURA en °C.:	
Media	17.5
Máxima día 8 y 22	25.7
Mínima día 19	12.2
PRESION ATMOSFERICA reducida a Temperatura Standard:	
Media	640.1
Máxima día 28 y 29	643.0
Mínima día 4	634.6
HUMEDAD RELATIVA en %:	
Media	86
Mínima día 8	49
PUNTO DE ROCIO en °C.:	
Medio	15.3
TENSION DEL VAPOR DE AGUA DE LA ATMOSFERA en mm.:	
Medio	13.06
LLUVIA:	
Días con lluvia apreciable	13
Días con lluvia inapreciable	3
Cantidad registrada en el mes en mm.	180.9
EVAPORACION EN LA SOMBRA en mm.:	
Total en el mes	94.4
VIENTO:	
Velocidad media en km/h.	16.2
Velocidad máxima en km/h. día 1	42.0
Presión máxima en kg/m^2	16.6
Recorrido total de kilómetros en el mes	11775.0
Dirección dominante	NNE
TEMPERATURA DEL SUBSUELO en °C. y a 30 cms:	
Media	20.2
INSOLACION:	
Total de horas y décimos	219.9
ESTADO DEL TIEMPO:	
Número de días nublados	13
Número de días medio nublados	14
Número de días despejados	4

OCTUBRE 1945

TEMPERATURA A LA SOMBRA EN °C.							
Días	7h.	13h.	19h.	Máxima	Mínima	Oscilación	Media
1	14.7	19.0	15.5	20.3	13.9	6.4	16.1
2	15.4	22.8	18.5	23.2	14.0	9.2	18.1
3	17.0	24.0	18.5	25.1	15.5	9.6	19.6
4	17.6	18.3	15.9	19.3	15.5	3.8	16.9
5	14.8	15.5	15.2	16.2	14.5	1.7	15.0
6	16.6	22.0	16.8	23.0	14.5	8.5	17.6
7	15.1	23.0	17.0	24.0	14.7	9.3	18.7
8	14.5	24.5	18.0	25.7	12.9	12.8	18.5
9	15.0	23.6	18.2	24.5	13.5	11.0	18.3
10	17.5	23.5	17.2	24.8	15.5	9.3	18.1
11	16.5	23.6	16.2	24.0	14.7	9.3	17.5
12	15.8	23.0	16.6	24.4	13.8	10.6	17.1
13	17.6	23.1	17.0	24.0	15.5	8.5	18.2
14	16.2	23.5	16.9	24.1	15.7	8.4	17.9
15	16.6	22.5	16.8	23.3	15.8	7.5	17.9
16	16.0	22.5	18.0	23.8	14.4	9.4	18.2
17	13.8	20.5	15.2	21.2	12.9	8.3	15.9
18	14.0	20.0	15.3	20.4	12.6	7.8	15.6
19	14.0	22.5	16.0	23.4	12.2	11.2	16.8
20	13.2	21.9	17.0	22.6	12.8	9.8	16.8
21	14.8	22.7	18.5	24.0	14.0	10.0	17.8
22	15.4	24.6	18.5	25.7	13.7	12.0	18.7
23	16.3	22.6	17.5	23.2	15.3	7.9	18.0
24	16.7	23.5	18.8	24.3	15.0	9.3	18.6
25	16.0	23.8	16.4	24.7	14.6	10.1	18.2
26	15.3	20.2	15.3	22.3	13.6	8.7	16.6
27	15.3	21.0	16.2	22.6	13.5	9.1	16.6
28	15.2	21.0	16.5	22.7	14.0	8.7	17.2
29	15.2	21.2	17.6	22.7	14.5	8.2	17.6
30	15.5	20.2	16.4	21.5	13.7	7.8	16.8
31	14.9	21.8	16.8	23.2	13.1	10.1	17.0
Máxima	17.6	24.6	18.8	25.7			
Mínima	13.2	15.5	15.2		12.2		
Oscil.	4.4	9.1	3.6			13.5	
Media	15.6	22.0	16.9				17.5

OCTUBRE 1945

PRESION ATMOSFERICA REDUCIDA A TEMPERATURA STANDARD							
Días	7h.	13h.	19h.	Máxima	Mínima	Oscilación	Media
1	638.9	639.3	639.9	640.9	638.1	2.8	639.1
2	640.3	640.1	639.8	640.9	639.2	2.7	640.1
3	639.2	638.3	638.0	640.2	636.7	3.5	638.6
4	636.8	635.6	635.3	637.7	634.6	3.1	636.1
5	638.3	639.0	638.5	640.6	636.2	4.4	638.6
6	639.9	640.1	640.1	641.1	639.6	1.5	640.1
7	641.3	640.6	640.4	641.7	639.5	2.2	640.7
8	641.1	640.1	640.0	641.6	638.9	2.7	640.5
9	640.1	639.3	639.1	641.2	638.3	2.9	639.8
10	639.1	638.7	639.1	640.1	637.6	2.5	639.1
11	639.5	639.5	639.7	640.8	638.7	2.1	639.8
12	640.6	639.2	640.2	641.0	638.9	2.1	639.8
13	640.1	639.5	640.1	640.7	638.6	2.1	640.0
14	640.3	639.6	639.9	641.0	638.2	2.8	639.9
15	640.1	639.7	640.5	641.2	638.6	2.6	640.2
16	640.7	639.6	639.4	641.3	637.8	3.5	639.6
17	640.1	639.7	640.0	641.4	638.9	2.5	640.0
18	641.3	639.8	640.7	641.8	639.3	2.5	640.4
19	641.6	641.2	641.3	642.4	640.0	2.4	641.3
20	641.9	641.3	641.5	642.6	640.0	2.6	641.4
21	641.3	640.7	640.6	641.8	639.5	2.3	640.8
22	640.6	640.0	640.7	641.7	638.8	2.9	640.5
23	641.1	640.8	641.2	641.7	639.8	1.9	640.9
24	641.2	640.6	639.8	641.9	639.3	2.6	640.7
25	641.0	640.0	640.5	641.8	638.7	3.1	640.1
26	641.3	640.5	641.2	642.1	639.5	2.6	641.0
27	641.3	640.8	641.6	642.2	640.3	1.9	641.4
28	642.1	642.8	642.6	643.0	640.7	2.3	641.9
29	642.3	642.0	642.5	643.0	641.2	1.8	642.3
30	641.1	640.3	640.1	642.6	639.0	3.6	640.8
31	639.8	639.0	639.3	640.8	637.8	3.0	639.2
Máxima	642.3	642.8	642.6	643.0			
Mínima	636.8	635.6	635.3		634.6		
Oscil.	5.5	7.2	7.3			8.4	
Media	640.5	639.9	640.1				640.1

OCTUBRE 1945

	HUMEDAD RELATIVA					PUNTO DE ROCIO	TENSION VAPOR
Días	7h.	13h.	19h.	Mínima	Media	Medio	Media
	%	%	%	%	%	°C.	mm.
1	88	66	88	62	86	13.3	11.17
2	90	71	96	61	89	16.3	14.00
3	91	68	87	54	81	16.5	14.13
4	91	97	96	91	95	16.4	14.04
5	95	97	96	94	96	14.6	12.43
6	89	72	97	67	89	16.0	13.61
7	89	60	95	50	81	14.8	12.65
8	98	59	96	49	84	15.9	13.55
9	98	60	96	52	87	15.9	13.54
10	92	67	97	61	88	17.3	14,23
11	95	73	96	70	91	16.6	14.25
12	93	67	96	62	90	16.5	13.43
13	88	66	95	63	86	16.1	13.74
14	93	67	96	60	89	16.1	13.80
15	94	66	97	65	89	16.0	13.64
16	94	66	96	60	83	16.1	13.74
17	68	63	97	59	77	12.1	10.75
18	81	66	97	62	82	12.6	11.28
19	85	53	90	56	82	12.8	11.14
20	96	63	96	60	85	14.5	12.46
21	96	63	94	64	87	15.7	13.40
22	96	59	96	54	83	16.3	13.95
23	93	66	95	59	86	16.0	13.62
24	87	60	84	60	82	15.3	13.03
25	99	56	96	53	84	16.1	13.10
26	86	73	97	64	86	14.1	12.33
27	88	62	96	58	84	14.1	12.08
28	91	80	97	65	87	15.7	13.45
29	98	66	94	63	85	15.4	13.13
30	90	67	96	66	86	14.5	12.42
31	93	63	96	57	85	14.8	12.68
Máxima	99	97	97				
Mínima	68	53	84	49			
Oscil.	31	44	13				
Media	91	67	95		86	15.3	13.06

OCTUBRE 1945

	PRECIPITACION			EVAPORACION
Días	Cantidad	Duración	Intensidad	En la sombra
	mms.	Horas	mms/h.	mms.
1	40.0	16.8	2.4	1.0
2	0.0	0.0	0.0	3.7
3	0.0	0.0	0.0	2.5
4	Inap	Inap	Inap	5.1
5	36.3	17.0	2.1	0.9
6	4.6	6.0	0.8	0.5
7	7.6	1.0	7.6	2.7
8	0.0	0.0	0.0	4.7
9	0.0	0.0	0.0	4.7
10	0.0	0.0	0.0	3.2
11	0.0	0.0	0.0	2.8
12	2.7	0.3	9.0	1.7
13	9.3	1.3	7.2	1.7
14	0.5	0.5	1.0	3.0
15	45.9	4.5	10.2	1.8
16	29.2	3.5	8.4	2.9
17	Inap	Inap	Inap	4.3
18	0.0	0.0	0.0	4.5
19	0.0	0.0	0.0	3.0
20	0.0	0.0	0.0	3.5
21	0.0	0.0	0.0	3.0
22	0.0	0.0	0.0	2.2
23	0.0	0.0	0.0	3.6
24	0.0	0.0	0.0	3.4
25	0.0	0.0	0.0	4.2
26	1.6	2.8	0.6	4.0
27	0.7	0.3	2.2	3.8
28	Inap	Inap	Inap	2.8
29	1.9	1.2	1.6	2.8
30	0.0	0.0	0.0	3.6
31	0.6	0.5	1.2	2.8
Total	180.9	55.7		94.4

OCTUBRE 1945

VIENTOS					
Días	Velocidad media	Velocidad máxima	Presión máxima	Recorrido total	Dirección dominante
	kms.	kms.	kg/m^2	kms	
1	27.0	39.0	14.3	650	NNE
2	5.6	18.0	2.9	135	NNE
3	16.4	29.0	7.9	395	NNE
4	11.2	25.0	5.4	270	NNE/S
5	19.6	36.0	12.2	470	S
6	8.1	23.0	5.0	195	NNE/S
7	14.8	19.0	3.4	355	NNE
8	9.2	13.0	1.5	220	NNE
9	7.9	24.0	5.4	190	NNE
10	10.8	24.0	5.4	260	NNE
11	7.1	20.0	3.8	170	NNE
12	4.6	15.0	2.1	110	NNE
13	11.2	19.0	3.4	270	NNE
14	14.2	23.0	5.0	340	NNE
15	12.1	26.0	6.4	290	NNE
16	18.5	28.0	7.4	445	NNE
17	20.0	31.0	9.0	480	NNE
18	19.6	23.0	5.0	470	NNE
19	17.1	20.0	3.8	410	NNE
20	17.0	20.0	3.8	410	NNE
21	25.0	18.0	2.9	300	NNE
22	12.9	30.0	8.5	310	NNE
23	22.2	37.0	12.8	535	NNE
24	17.9	28.0	7.4	430	NNE
25	17.7	24.0	5.4	425	NNE
26	28.3	40.0	15.0	680	NNE
27	27.5	40.0	15.0	660	NNE
28	20.0	42.0	16.6	530	NNE
29	19.0	32.0	9.6	455	NNE
30	19.4	30.0	8.5	465	NNE
31	18.8	28.0	7.4	450	NNE
Media	16.2				
Máxima		42.0			
Presión			16.6		
Total				11775	
Dominante					NNE

OCTUBRE 1945

Días	TEMPERATURA DEL SUBSUELO A 30 cms. DE PROFUNDIDAD 7h.	13h.	19h.	Media	INSOLACION Horas de sol	Fracción de insol.
	°C.	°C.	°C.	°C.	hs.	%
1	19.8	20.0	19.9	19.9	5.0	40
2	20.1	20.2	20.1	20.1	4.7	38
3	20.1	20.2	20.2	20.2	10.6	87
4	20.1	20.1	20.0	20.1	0.5	0
5	20.0	20.0	20.0	20.0	0.0	0
6	20.0	20.1	20.1	20.1	9.4	75
7	20.0	20.2	20.1	20.1	10.0	81
8	20.0	20.2	20.1	20.1	9.6	78
9	20.0	20.2	20.1	20.1	8.8	74
10	20.2	20.3	20.2	20.2	7.8	63
11	20.2	20.3	20.2	20.2	3.8	31
12	20.3	20.4	20.2	21.3	4.6	38
13	20.3	20.3	20.2	20.3	8.0	67
14	20.3	20.3	20.2	20.3	5.5	44
15	20.2	20.3	20.2	20.2	7.7	62
16	20.3	20.3	20.2	20.3	9.4	76
17	20.2	20.3	20.2	20.2	6.6	55
18	20.2	20.3	20.2	20.2	3.8	32
19	20.2	20.2	20.1	20.2	8.4	70
20	20.1	20.2	20.1	20.1	7.5	68
21	20.0	20.1	20.1	20.1	6.8	57
22	20.0	20.1	20.0	20.0	9.0	75
23	19.9	20.0	20.0	20.0	8.5	72
24	20.1	20.2	20.1	20.1	9.0	76
25	20.1	20.2	20.2	20.2	9.0	76
26	20.2	20.3	20.2	20.2	8.6	73
27	20.1	21.2	21.2	21.2	8.8	74
28	20.0	20.1	20.1	20.0	7.5	64
29	20.0	20.1	20.1	20.1	6.7	57
30	20.0	20.1	20.0	20.0	5.8	61
31	19.9	20.0	20.0	20.0	8.5	73
Máxima	20.3	21.2	21.2		10.6	87
Mínima	19.8	20.0	19.9		0.5	0
Oscil.	.5	1.2	1.3			
Media	20.1	20.2	20.2	20.2	7.1	59
Total					219.9	

OCTUBRE 1945

NEBULOSIDAD									
T.U. del Merid. 90 W					1200				
Días	N	GENERO DE NUBES						h_L	D_L
		N_L	C_L	N_M	C_M	N_H	C_H		
1	0.7	0.7	Cu.Cb.	V	As.	0.0		900	N.
2	0.9	0.6	Cu.Cb.	0.6	Ac.	0.0		1800	N.
3	0.6	0.4	Cu.	0.4	Ac.	0.2	Ci.	1800	
4	1.0	1.0	Sc.Ns.	0.0		0.0		300	S.
5	1.0	1.0	St.Sc.Ns	0.0		0.0		200	S.
6	0.6	0.6	Cu.Cb.	-.-	Ac.	0.0			N.
7	0.4	0.4	Cu.	0.0		0.0		1500	N.
8	0.4	0.4	Cu.	0.0		0.0		1200	N.
9	0.3	0.3	Cu.	0.0		0.0		1000	N.
10	0.2	0.2	Cu.	0.0		0.0		1500	N.
11	0.4	0.4	Cu.Cb.	0.0		0.0		1800	N.
12	0.8	0.8	Cu.Cb.	0.0		0.0		800	N.
13	0.3	0.3	Cu.	-.-	Ac.	0.0			
14	0.7	0.7	Cu.	0.0		0.0		600	N.
15	0.6	0.5	Cu.	0.1	Ac.	0.0		1000	N.
16	0.7	0.5	Cu.	0.7	Ac.As.	-.-	Ci.	1200	N.
17	0.4	0.1	Cu.	0.4	Ac.	0.0		1800	N.
18	0.8	0.8	Sc.St.	0.0		0.0		800	N.
19	0.4	0.4	Cu.	0.0		0.0		1200	N.
20	0.4	0.4	Cu.	0.0		0.0		800	N.
21	0.7	0.7	Sc.Cu.	0.0		0.0		600	N.
22	0.4	0.2	Cu.	0.2	Ac.	0.0		1200	N.
23	0.4	0.6	Sc.Cu.Cb	0.0		0.0		800	N.
24	0.7	0.7	Cu.Cb.	0.0		0.0		1200	N.
25	0.6	0.6	Cu.Cb.	0.0		0.0		1200	N.
26	0.8	0.8	Cu.Cb.	0.0		0.0		800	N.
27	0.6	0.4	Cu.	0.4	Ac.	0.0			N.
28	0.7	0.7	Cu.Cb.	0.0		0.0		1000	N.
29	0.7	0.7	Cu.Cb.	0.0		0.0		800	N.
30	0.8	0.8	Cu.	0.0		0.0		600	N.
31	0.4	0.4	Cu.	0.0		0.0			N.

NOVIEMBRE 1945

RESUMEN MENSUAL

TEMPERATURA en °C.:	
Media	16.5
Máxima día 13	25.4
Mínima día 10 y 29	10.0
PRESION ATMOSFERICA reducida a Temperatura Standard:	
Media	640.6
Máxima día 24	643.6
Mínima día 9	637.8
HUMEDAD RELATIVA en %:	
Media	84
Mínima día 13	45
PUNTO DE ROCIO en °C.:	
Medio	13.9
TENSION DEL VAPOR DE AGUA DE LA ATMOSFERA en mm:	
Medio	11.95
LLUVIA:	
Días con lluvia apreciable	2
Días con lluvia inapreciable	1
Cantidad registrada en el mes en mm	21.6
EVAPORACION EN LA SOMBRA en mm.:	
Total en el mes	112.6
VIENTO:	
Velocidad media en km/h	17.6
Velocidad máxima en km/h día 24	45.0
Presión máxima en kg/m²	19.1
Recorrido total de kilómetros en el mes	12955.0
Dirección dominante	NNE
TEMPERATURA DEL SUBSUELO en °C. y a 30 cms:	
Media	19.7
INSOLACION:	
Total de horas y décimos	230.3
ESTADO DEL TIEMPO:	
Número de días nublados	7
Número de días medio nublados	18
Número de días despejados	5

NOVIEMBRE 1945

TEMPERATURA A LA SOMBRA EN °C.							
Días	7h.	13h.	19h.	Máxima	Mínima	Oscilación	Media
1	15.0	22.5	16.5	22.9	14.0	8.9	17.3
2	15.8	22.0	17.6	23.5	14.8	8.7	17.8
3	16.6	22.8	16.0	23.6	15.7	7.9	17.2
4	15.9	19.6	14.9	20.0	13.5	6.5	16.3
5	16.0	20.5	16.5	21.7	13.5	8.2	16.8
6	14.3	20.0	15.5	21.2	13.4	7.8	16.2
7	16.0	20.5	16.2	22.2	14.1	8.1	16.7
8	14.5	20.8	16.0	22.6	11.6	11.0	16.4
9	15.0	21.6	15.7	22.2	14.0	8.2	16.5
10	12.6	21.0	15.2	22.3	10.0	12.3	15.6
11	16.0	20.2	15.2	20.8	12.1	8.7	15.7
12	15.0	22.4	17.1	23.4	11.6	11.8	16.8
13	14.6	24.6	17.5	25.4	12.9	12.5	17.9
14	14.1	21.6	17.8	23.2	13.1	10.1	17.1
15	14.3	20.0	15.2	21.0	12.1	8.9	15.7
16	14.7	19.9	14.8	20.8	13.5	7.3	15.9
17	14.4	21.6	16.0	22.3	13.0	9.3	16.8
18	15.7	20.5	16.5	22.0	14.1	7.9	17.3
19	15.4	20.0	16.2	22.0	14.8	7.2	16.6
20	16.0	20.8	16.0	22.4	12.5	9.9	17.1
21	13.9	24.8	16.5	25.2	10.5	14.7	16.8
22	15.7	22.4	17.6	23.2	14.2	9.0	17.8
23	16.0	20.5	16.0	21.4	13.7	7.7	16.9
24	15.0	19.4	15.1	20.8	13.5	7.3	16.0
25	12.8	20.2	14.5	21.2	10.4	10.8	15.2
26	13.0	20.5	15.0	21.6	12.1	9.5	15.8
27	13.0	20.8	16.0	22.2	10.5	11.7	15.8
28	14.7	19.8	14.0	20.4	11.4	9.0	15.6
29	13.0	20.4	14.6	21.0	10.0	11.0	14.8
30	13.9	19.9	14.3	20.6	11.7	8.9	15.4
..	....	....	....	....	....	...	....
Máxima	16.6	24.8	17.8	25.4			
Mínima	12.6	19.4	14.0		10.0		
Oscil.	4.0	5.4	3.8			15.4	
Media	14.8	21.1	15.9				16.5

NOVIEMBRE 1945

PRESION ATMOSFERICA REDUCIDA A TEMPERATURA STANDARD							
Días	7h.	13h.	19h.	Máxima	Mínima	Oscilación	Media
1	640.4	638.9	639.7	640.9	638.0	2.9	639.6
2	640.4	639.1	639.8	641.0	638.5	2.5	639.8
3	640.5	639.4	640.1	641.0	638.9	2.1	640.0
4	641.0	640.1	640.3	641.8	639.5	2.3	640.5
5	640.3	640.2	640.3	642.0	639.3	2.7	640.4
6	640.8	640.4	641.1	641.8	639.8	2.0	640.7
7	640.5	639.9	640.2	642.0	639.1	2.9	640.4
8	640.1	639.0	639.0	640.9	638.0	2.9	639.4
9	639.7	638.7	639.1	640.1	637.8	2.3	639.1
10	639.9	639.7	639.9	640.9	638.4	2.5	639.7
11	640.6	639.3	639.7	641.0	638.7	2.3	639.7
12	640.5	639.6	639.9	641.0	638.8	2.2	639.8
13	639.6	638.6	639.9	640.6	638.3	2.3	639.6
14	640.6	640.0	641.2	642.8	639.6	3.2	640.6
15	642.3	641.5	641.6	643.0	640.6	2.4	642.0
16	641.9	641.8	640.9	643.2	640.5	2.7	641.8
17	641.1	641.0	640.6	642.2	639.6	2.6	640.8
18	640.1	640.3	641.7	641.7	639.5	2.2	640.5
19	640.7	640.1	639.9	641.4	639.4	2.0	640.3
20	640.9	639.3	639.3	641.3	638.3	3.0	639.9
21	640.3	639.6	640.7	641.3	639.2	2.1	640.1
22	641.8	641.0	641.3	642.5	640.1	2.4	641.3
23	642.0	641.4	642.0	643.1	640.6	2.5	641.9
24	642.1	641.1	641.2	643.6	639.8	3.8	641.6
25	641.8	639.2	641.3	642.0	639.2	2.8	641.2
26	641.4	640.9	641.6	642.4	640.0	2.4	641.2
27	641.7	641.1	641.8	642.6	640.5	2.1	641.7
28	642.0	640.9	641.1	642.9	640.3	2.6	641.6
29	641.0	640.5	640.8	641.9	639.6	2.3	641.0
30	640.9	639.9	640.1	641.2	638.9	2.3	640.5
..	.....	.....	.....	.....	.....	...	.....
Máxima	642.3	641.8	642.0	643.6			
Mínima	639.6	638.6	639.0		637.8		
Oscil.	2.7	3.2	3.0			5.8	
Media	640.9	640.1	640.5				640.6

NOVIEMBRE 1945

	HUMEDAD RELATIVA					PUNTO DE ROCIO	TENSION VAPOR
Días	7h.	13h.	19h.	Mínima	Media	Medio	Media
	%	%	%	%	%	°C.	mm.
1	95	68	95	58	86	15.4	13.15
2	94	69	93	64	88	15.8	13.47
3	92	71	95	66	92	16.0	13.66
4	92	69	77	72	84	13.1	11.37
5	78	71	86	65	84	13.8	11.86
6	90	76	95	67	88	14.1	12.29
7	87	72	93	66	87	14.7	12.61
8	85	68	92	54	82	13.5	11.60
9	95	64	90	59	85	14.3	12.24
10	89	55	92	51	81	12.1	10.30
11	89	60	87	57	80	13.1	11.31
12	90	60	94	57	83	14.6	12.49
13	94	49	94	45	82	14.4	12.36
14	99	57	87	55	81	14.1	12.11
15	77	64	87	60	78	12.0	10.69
16	84	72	97	68	86	13.8	11.90
17	86	64	97	66	86	14.0	12.10
18	88	71	95	66	86	14.9	12.71
19	97	68	91	66	89	14.5	12.40
20	84	59	90	56	82	13.9	11.60
21	93	54	95	50	83	14.5	12.36
22	93	54	89	48	80	14.3	12.30
23	88	72	90	67	86	15.0	12.46
24	79	72	76	59	78	12.2	10.70
25	92	73	95	65	86	13.6	11.62
26	98	71	90	66	88	13.7	11.71
27	94	77	90	62	85	14.8	12.35
28	90	66	80	59	82	12.3	10.78
29	82	69	94	57	81	12.8	11.12
30	91	61	92	58	85	12.6	10.94
..	..	..	..	..	..	....	.....
Máxima	99	77	97				
Mínima	77	49	76	45			
Oscil.	22	28	21				
Media	90	66	91		84	13.9	11.95

NOVIEMBRE 1945

	PRECIPITACION			EVAPORACION
Días	Cantidad	Duración	Intensidad	En la sombra
	mms.	Horas	mms/h.	mms.
1	0.0	0.0	0.0	3.7
2	0.0	0.0	0.0	3.3
3	0.0	0.0	0.0	2.5
4	19.6	1.2	16.3	1.6
5	0.0	0.0	0.0	4.0
6	0.0	0.0	0.0	3.8
7	0.0	0.0	0.0	2.4
8	0.0	0.0	0.0	4.3
9	0.0	0.0	0.0	3.4
10	0.0	0.0	0.0	3.4
11	2.0	3.5	0.6	4.0
12	0.0	0.0	0.0	4.4
13	0.0	0.0	0.0	3.6
14	0.0	0.0	0.0	3.9
15	0.0	0.0	0.0	5.6
16	0.0	0.0	0.0	6.0
17	0.0	0.0	0.0	3.5
18	0.0	0.0	0.0	3.8
19	Inap	Inap	Inap	3.2
20	0.0	0.0	0.0	2.9
21	0.0	0.0	0.0	4.0
22	0.0	0.0	0.0	3.5
23	0.0	0.0	0.0	5.1
24	0.0	0.0	0.0	4.3
25	0.0	0.0	0.0	4.7
26	0.0	0.0	0.0	2.8
27	0.0	0.0	0.0	2.7
28	0.0	0.0	0.0	3.8
29	0.0	0.0	0.0	4.2
30	0.0	0.0	0.0	4.2
..	...	...	...	...
Total	21.6	4.7		112.6

NOVIEMBRE 1945

VIENTOS					
Días	Velocidad media	Velocidad máxima	Presión máxima	Recorrido total	Dirección dominante
	kms.	kms.	kg/m²	kms.	
1	13.7	22.0	4.6	330	NNE
2	6.9	15.0	2.1	165	NNE
3	4.8	12.0	1.4	115	NNE/S
4	22.1	44.0	6.9	530	NNE
5	25.0	43.0	17.4	600	NNE
6	16.7	30.0	8.5	400	NNE
7	20.8	40.0	15.0	500	NNE
8	17.7	33.0	10.1	425	NNE
9	15.0	19.0	3.4	360	NNE
10	10.6	29.0	7.9	255	NNE
11	11.6	30.0	8.5	280	NNE
12	14.6	20.0	3.8	350	NNE
13	7.5	21.0	4.3	180	NNE
14	22.9	32.0	9.6	550	NNE
15	28.1	42.0	16.6	675	NNE
16	24.6	37.0	12.8	590	NNE
17	22.2	27.0	6.9	535	NNE
18	23.6	37.0	12.8	565	NNE
19	18.6	32.0	9.6	445	NNE
20	15.4	23.0	5.0	370	NNE
21	7.1	17.0	2.7	170	NNE
22	18.8	28.0	7.4	450	NNE
23	26.0	36.0	12.2	625	NNE
24	30.8	45.0	19.1	740	NNE
25	17.3	25.0	5.9	415	NNE
26	20.7	30.0	8.5	520	NNE
27	17.1	25.0	5.9	410	NNE
28	23.8	38.0	13.6	570	NNE
29	18.7	27.0	6.9	450	NNE
30	16.0	18.0	2.9	385	NNE
..	....	....	...	...	...
Media	17.6				
Máxima		45.0			
Presión			19.1		
Total				12955	
Dominante					NNE

NOVIEMBRE 1945

Días	TEMPERATURA DEL SUBSUELO A 30 cms. DE PROFUNDIDAD 7h.	13h.	19h.	Media	INSOLACION Horas de sol	Fracción de insol.
	°C.	°C.	°C.	°C.	hs.	%
1	20.2	20.1	20.1	20.1	8.0	70
2	20.1	20.2	20.1	20.1	3.4	29
3	20.1	20.1	20.0	20.1	2.5	22
4	20.0	20.0	19.9	20.0	1.1	10
5	19.8	19.9	19.9	19.9	9.4	81
6	19.9	19.9	19.9	19.9	4.5	39
7	19.7	19.8	19.9	19.8	8.2	71
8	19.7	19.8	19.8	19.8	8.6	75
9	19.7	19.8	19.8	19.8	8.0	70
10	19.5	19.7	19.6	19.6	8.6	75
11	19.5	19.7	19.6	19.6	10.5	91
12	19.5	19.6	19.6	19.6	9.7	84
13	19.5	19.6	19.6	19.6	9.9	86
14	19.5	19.7	19.6	19.6	9.0	78
15	19.6	19.7	19.6	19.6	8.8	77
16	19.6	19.6	19.6	19.6	4.7	41
17	19.6	19.7	19.7	19.7	5.5	48
18	19.6	19.6	19.7	19.6	7.6	67
19	19.6	19.7	19.8	19.7	5.0	44
20	19.6	19.7	19.6	19.6	9.3	82
21	19.5	19.7	19.6	19.6	10.2	90
22	19.5	19.7	19.6	19.6	8.6	76
23	19.6	19.7	19.7	19.7	7.0	62
24	19.6	19.7	19.6	19.6	6.6	58
25	19.5	19.6	19.5	19.5	7.7	68
26	19.5	19.6	19.5	19.5	9.5	83
27	19.5	19.5	19.5	19.5	9.8	87
28	19.5	19.5	19.4	19.5	10.1	89
29	19.3	19.4	19.3	19.4	10.0	88
30	19.3	19.3	19.2	19.3	8.5	75
..	....	....	....	....	...	..
Máxima	20.2	20.2	20.1		10.5	91
Mínima	19.3	19.3	19.2		1.1	10
Oscil.	.9	.9	.9			
Media	19.6	19.7	19.7	19.7	7.7	67
Total		...			230.3	

NOVIEMBRE 1945

NEBULOSIDAD									
T.U. del Merid. 90 W				1200					
Días	N	GENERO DE NUBES						h_L	D_L
		N_L	C_L	N_M	C_M	N_H	C_H		
1	0.4	0.4	Cu.	0.0		0.0		800	N.
2	0.8	0.8	Sc.Cu.	0.0		0.0		600	N.
3	0.9	0.9	Cu.Cb.	-.-	Ac.	0.0		600	S.
4	0.9	0.9	Cu.Cb.	0.0		0.0		500	N.
5	0.5	0.3	Cu.	0.2	Ac.	0.0		1200	N.
6	0.4	0.4	Cu.	V	Ac.	V	Ci.	800	N.
7	0.6	0.6	Cu.	0.0		0.0			N.
8	0.3	0.3	Cu.	0.0		0.0		1200	N.
9	0.4	0.4	Cu.	0.0		0.0		1000	N.
10	0.4	0.4	Cu.	0.0		0.0		800	N.
11	0.4	0.4	Cu.	0.0		0.0			N.
12	0.4	0.4	Cu.	0.0		0.0			N.
13	0.4	0.4	Cu.	0.0		0.0		1000	N.
14	0.3	0.3	Cu.	0.0		0.0		1000	N.
15	0.4	0.4	Cu.	0.0		0.0		1200	N.
16	0.8	0.8	Sc.	-.-	As.	0.0		400	N.
17	0.4	0.4	Cu.	0.0		0.0		1000	N.
18	0.5	0.5	Cu.	0.0		0.0		1200	N.
19	0.6	0.6	Sc.Cu.	0.0		0.0		800	N.
20	0.7	0.6	Cu.	0.1	Ac.	0.0		1000	N.
21	0.3	0.2	Cu.	0.0		0.1	Cs.	1200	N.
22	0.3	0.3	Cu.	0.0		0.0		1200	N.
23	0.4	0.4	Cu.	0.0		0.0		800	N.
24	0.7	0.7	Sc.Cu.	0.0		0.0		800	N.
25	0.4	0.4	Cu.	0.0		0.0		1200	N.
26	0.5	0.5	Cu.	0.0		0.0		800	N.
27	0.6	0.4	Cu.	0.2	Ac.	0.0		1500	N.
28	0.5	0.5	Cu.	0.0		0.0		1200	N.
29	0.2	0.2	Cu.	0.0		0.0		2000	N.
30	0.5	0.5	Cu.Fc.	0.0		0.0		1200	N.
..	...	...	..	...		...		....	..

RESUMEN MENSUAL

TEMPERATURA en °C.:	
Media	16.3
Máxima día 28	27.2
Mínima día 9	6.0
PRESION ATMOSFERICA reducida a Temperatura Standard:	
Media	640.3
Máxima día 5	643.2
Mínima día 14	637.5
HUMEDAD RELATIVA en %:	
Media	79
Mínima día 7	20
PUNTO DE ROCIO en °C.:	
Medio	12.6
TENSION DEL VAPOR DE AGUA DE LA ATMOSFERA en mm.:	
Medio	11.10
LLUVIA:	
Días con lluvia apreciable	1
Días con lluvia inapreciable	1
Cantidad registrada en el mes en mm	1.5
EVAPORACION EN LA SOMBRA en mm.:	
Total en el mes	139.3
VIENTO:	
Velocidad media en km/h	15.9
Velocidad máxima en km/h día 16	43.0
Presión máxima en kg/m^2	17.4
Recorrido total de kilómetros en el mes	11860.0
Dirección dominante	NNE
TEMPERATURA DEL SUBSUELO en °C. y a 30 cms:	
Media	18.8
INSOLACION:	
Total de horas y décimos	266.6
ESTADO DEL TIEMPO:	
Número de días nublados	1
Número de días medio nublados	17
Número de días despejados	13

DICIEMBRE 1945

TEMPERATURA A LA SOMBRA EN °C.							
Días	7h.	13h.	19h.	Máxima	Mínima	Oscilación	Media
1	13.0	21.1	15.6	22.0	10.2	11.8	15.4
2	12.7	20.4	15.9	21.7	12.3	9.4	15.9
3	13.9	22.3	16.0	22.6	11.5	11.1	16.5
4	14.5	20.0	14.5	21.4	10.2	11.2	15.4
5	9.6	16.0	9.6	16.6	7.4	9.2	11.0
6	8.9	23.5	14.4	24.0	6.2	17.8	13.1
7	12.3	22.6	14.0	23.3	8.6	14.7	14.6
8	9.7	19.0	13.8	20.4	7.3	13.1	12.9
9	10.0	24.6	16.2	25.3	6.0	19.3	15.2
10	10.2	24.4	17.5	24.6	8.7	15.9	16.4
11	12.9	19.5	16.0	21.2	11.4	9.8	15.6
12	14.6	21.0	15.5	22.3	11.9	10.4	16.2
13	12.9	24.0	17.7	25.7	11.5	14.2	16.8
14	13.0	25.3	16.0	26.0	12.1	13.9	17.0
15	14.5	22.9	17.8	24.0	13.1	10.9	17.6
16	14.0	21.1	16.2	22.4	12.5	9.9	16.6
17	15.4	22.6	16.9	24.0	12.9	11.1	17.3
18	14.6	23.4	18.1	25.6	14.0	11.6	18.1
19	14.1	23.8	18.0	25.1	13.3	11.8	18.2
20	14.4	21.8	15.8	23.0	13.1	9.9	16.8
21	15.5	20.4	15.9	21.5	13.6	7.9	16.4
22	15.1	21.6	15.5	22.1	13.5	8.6	16.7
23	14.4	23.3	17.2	24.4	12.9	11.5	17.0
24	12.2	25.0	16.2	25.7	10.4	15.3	17.0
25	13.2	25.5	16.9	26.2	13.2	13.0	17.8
26	14.5	24.6	17.0	25.0	13.1	11.9	18.1
27	14.5	23.5	17.5	24.8	12.6	12.2	17.3
28	15.0	25.5	17.5	27.2	13.7	13.5	18.3
29	13.1	22.8	17.0	23.9	10.2	13.7	16.7
30	12.2	24.1	16.8	25.5	11.9	13.6	17.2
31	14.5	23.5	16.7	24.5	11.5	13.0	17.4
Máxima	15.5	25.5	18.1	27.2			
Mínima	8.9	16.0	9.6		6.0		
Oscil	6.6	9.5	8.5			21.2	
Media	13.2	22.6	16.1				16.3

DICIEMBRE 1945

PRESION ATMOSFERICA REDUCIDA A TEMPERATURA STANDARD							
Días	7h.	13h.	19h.	Máxima	Mínima	Oscilación	Media
1	641.0	640.1	640.6	641.6	639.4	2.2	640.6
2	641.3	640.8	640.6	642.2	639.6	2.6	640.9
3	641.3	639.6	639.9	641.3	638.8	2.5	640.3
4	640.7	640.1	641.1	642.4	639.6	2.8	640.6
5	642.4	640.3	641.1	643.2	639.6	3.6	641.4
6	641.0	639.4	640.2	641.2	638.8	2.4	640.3
7	640.4	639.4	640.2	641.1	638.7	2.4	640.0
8	640.5	639.8	639.9	641.5	639.1	2.4	640.2
9	640.3	639.2	638.7	640.7	638.1	2.6	639.7
10	640.1	639.4	639.8	641.4	638.4	3.0	639.8
11	641.0	640.9	640.2	642.0	639.5	2.5	640.6
12	640.6	640.4	640.6	641.5	639.5	2.0	640.6
13	640.7	639.1	639.1	641.4	637.9	3.5	639.9
14	640.1	638.3	638.7	640.6	637.5	3.1	639.0
15	640.3	639.8	640.2	641.5	638.8	2.7	639.7
16	640.2	641.0	640.6	642.4	639.6	2.8	641.0
17	642.0	641.2	640.5	642.6	639.8	2.8	641.2
18	641.3	640.0	640.1	641.7	638.4	3.3	640.4
19	640.7	639.7	640.2	641.3	638.4	2.9	640.1
20	642.0	640.8	640.0	642.5	639.8	2.7	641.0
21	641.8	641.9	641.9	642.8	640.5	2.3	641.6
22	642.4	641.5	641.5	642.9	640.3	2.6	641.8
23	641.5	639.8	639.7	642.2	638.4	3.8	640.4
24	639.5	639.9	639.1	640.2	637.8	2.4	639.2
25	639.6	638.4	639.0	640.2	637.7	2.5	639.1
26	640.2	639.6	639.8	641.2	638.6	2.6	639.9
27	640.3	639.3	639.4	641.1	638.3	2.8	639.9
28	640.1	638.7	639.2	640.8	637.8	3.0	639.5
29	640.3	639.3	640.0	641.0	638.2	2.8	639.9
30	640.7	639.4	639.8	641.2	638.4	2.8	639.9
31	641.0	640.5	640.9	642.4	639.7	2.7	640.7
Máxima	642.4	641.9	641.9	643.2			
Mínima	639.5	638.3	638.7		637.5		
Oscil.	2.9	3.6	3.2			5.7	
Media	640.8	639.9	640.1				640.3

DICIEMBRE 1945

	HUMEDAD RELATIVA					PUNTO DE ROCIO	TENSION VAPOR
Días	7h.	13h.	19h.	Mínima	Media	Medio	Media
	%	%	%	%	%	°C.	mm.
1	86	54	85	49	78	11.8	10.38
2	90	64	87	57	82	12.7	11.05
3	96	61	95	57	85	14.3	12.23
4	85	68	85	58	80	13.0	11.04
5	76	64	88	58	77	7.5	7.81
6	95	42	96	31	78	10.6	9.76
7	93	21	85	20	71	7.4	8.17
8	86	46	73	37	71	8.3	8.00
9	92	32	89	25	69	9.9	9.36
10	99	44	85	41	78	12.1	10.67
11	83	64	86	60	78	12.1	10.63
12	89	67	86	59	83	13.6	11.69
13	96	51	94	49	82	14.1	12.20
14	99	51	95	46	83	14.2	12.16
15	95	50	75	46	75	13.0	11.27
16	90	60	89	54	79	13.3	11.44
17	86	59	94	56	83	14.4	12.31
18	97	55	96	50	83	15.1	12.98
19	99	52	74	40	79	13.6	11.70
20	96	56	95	53	83	13.8	11.85
21	90	71	94	65	88	14.6	12.32
22	88	57	92	55	83	13.0	11.49
23	94	58	56	48	76	12.2	10.81
24	95	46	96	40	84	13.2	11.41
25	93	44	96	40	80	13.6	11.79
26	94	42	63	41	73	11.5	10.23
27	95	54	93	49	80	14.6	12.49
28	95	55	94	32	79	15.5	13.22
29	84	52	91	40	76	12.7	11.14
30	95	53	96	43	80	13.8	11.92
31	95	47	66	42	73	11.8	10.46
Máxima	99	71	96				
Mínima	76	21	56	20			
Oscil.	23	50	40				
Media	92	53	87		79	12.6	11.10

DICIEMBRE 1945

	PRECIPITACION			EVAPORACION
Días	Cantidad	Duración	Intensidad	En la sombra
	mms.	Horas	mms/h.	mms.
1	0.0	0.0	0.0	4.1
2	0.0	0.0	0.0	4.1
3	0.0	0.0	0.0	3.3
4	1.5	0.3	5.0	3.7
5	0.0	0.0	0.0	4.8
6	0.0	0.0	0.0	4.7
7	0.0	0.0	0.0	3.3
8	0.0	0.0	0.0	6.6
9	0.0	0.0	0.0	4.5
10	0.0	0.0	0.0	5.9
11	0.0	0.0	0.0	5.0
12	0.0	0.0	0.0	4.2
13	0.0	0.0	0.0	4.0
14	0.0	0.0	0.0	3.0
15	0.0	0.0	0.0	4.5
16	0.0	0.0	0.0	6.5
17	0.0	0.0	0.0	5.0
18	0.0	0.0	0.0	4.7
19	0.0	0.0	0.0	4.0
20	0.0	0.0	0.0	4.3
21	Inap	Inap	Inap	4.4
22	0.0	0.0	0.0	3.2
23	0.0	0.0	0.0	4.3
24	0.0	0.0	0.0	5.0
25	0.0	0.0	0.0	4.0
26	0.0	0.0	0.0	4.5
27	0.0	0.0	0.0	5.6
28	0.0	0.0	0.0	3.8
29	0.0	0.0	0.0	4.4
30	0.0	0.0	0.0	5.1
31	0.0	0.0	0.0	4.8
Total	1.5	0.3		139.3

DICIEMBRE 1945

VIENTOS					
Días	Velocidad media	Velocidad máxima	Presión máxima	Recorrido total	Dirección dominante
	kms.	kms.	kg/m²	kms.	
1	14.6	20.0	3.8	350	NNE
2	10.8	19.0	3.4	260	NNE
3	8.6	32.0	9.6	205	NNE
4	23.8	40.0	15.0	570	NNE
5	21.2	33.0	10.1	510	NNE
6	5.6	18.0	2.9	135	NNE
7	7.3	23.0	5.0	175	NNE
8	10.8	21.0	4.3	260	NNE
9	9.4	24.0	5.4	225	NNE
10	12.9	20.0	3.8	310	NNE
11	24.1	34.0	10.9	580	NNE
12	21.6	29.0	7.9	520	NNE
13	8.3	17.0	2.7	200	NNE
14	7.9	21.0	4.3	190	NNE
15	24.4	32.0	9.6	585	NNE
16	29.8	43.0	17.4	715	NNE
17	26.7	33.0	10.1	640	NNE
18	14.2	18.0	2.9	340	NNE
19	11.7	20.0	3.8	280	NNE
20	30.8	42.0	16.8	740	NNE
21	25.8	32.0	9.6	620	NNE
22	24.8	28.0	7.4	595	NNE
23	17.5	26.0	6.4	420	NNE
24	9.6	20.0	3.8	230	NNE
25	10.6	22.0	4.6	255	NNE
26	12.9	20.0	3.8	310	NNE
27	11.9	19.0	3.4	285	NNE
28	8.3	19.0	3.1	200	NNE
29	17.0	27.0	6.9	410	NNE
30	11.2	24.0	5.4	240	NNE/SSW
31	19.8	39.0	14.3	475	NNE/SSW
Media	15.9				
Máxima		43.0			
Presión			17.4		
Total				11860	
Dominante					NNE

DICIEMBRE 1945

Días	TEMPERATURA DEL SUBSUELO A 30 cms. DE PROFUNDIDAD 7h.	13h.	19h.	Media	INSOLACION Horas de sol	Fracción de insol.
	°C.	°C.	°C.	°C.	hs.	%
1	19.3	19.3	19.3	19.3	9.0	79
2	19.2	19.3	19.2	19.2	7.2	64
3	19.1	19.2	19.0	19.1	9.4	82
4	19.1	19.0	18.9	19.0	7.8	69
5	19.0	19.0	18.9	19.0	7.5	66
6	18.8	18.9	18.9	18.9	8.2	72
7	18.8	18.9	18.8	18.8	10.0	89
8	18.6	18.7	18.6	18.6	10.0	89
9	18.5	18.6	18.6	18.6	10.0	89
10	18.5	18.7	18.6	18.6	8.8	78
11	18.4	18.6	18.5	18.5	8.0	72
12	18.5	18.6	18.6	18.6	8.9	80
13	18.5	18.7	18.6	18.6	7.5	67
14	18.4	18.5	18.6	18.5	7.2	54
15	18.5	18.6	18.6	18.6	9.6	85
16	18.6	18.7	18.6	18.6	10.0	89
17	18.6	18.8	18.6	18.7	8.5	76
18	18.6	18.8	18.7	18.7	8.2	73
19	18.7	18.9	18.8	18.8	8.0	72
20	18.9	19.0	18.9	18.9	8.0	72
21	18.8	18.9	18.9	18.9	7.8	70
22	18.9	19.0	18.9	18.9	7.5	68
23	18.8	18.9	18.9	18.9	8.0	72
24	18.8	19.0	18.9	18.9	9.4	84
25	18.8	18.9	18.9	18.9	9.0	80
26	18.9	19.0	18.9	18.9	9.2	82
27	19.0	19.0	18.9	19.0	9.0	80
28	19.0	19.2	19.1	19.1	7.5	67
29	19.1	19.3	19.2	19.2	8.5	76
30	19.0	19.2	19.1	19.1	10.0	89
31	19.0	19.2	19.1	19.1	8.9	79
Máxima	19.3	19.3	19.3		10.0	89
Mínima	18.4	18.5	18.5		7.2	64
Oscil.	.9	.8	.8			
Media	18.8	18.9	18.8	18.8	8.6	76
Total					266.6	

DICIEMBRE 1945

NEBULOSIDAD									
T.U. del Merid. 90°W				1200					
Días	N	GENERO DE NUBES						h_L	D_L
		N_L	C_L	N_M	C_M	N_H	C_H		
1	0.6	0.0		0.6	Ac.	0.3	Ci.	4500	NW.
2	0.3	0.3	Cu.	0.0		0.0		1200	N.
3	0.4	0.4	Cu.	0.0		0.0		1200	N.
4	0.1	0.1	Cu.	0.0		0.0		1500	N.
5	0.4	0.3	Cu.	0.2	As.	V	Ci.	1000	N.
6	0.3	0.3	Cu.	V	Ac.	V	Ci.	1000	N.
7	0.2	0.2	Cu.	0.0		0.0		1000	N.
8	0.2	0.2	Cu.	0.0		V	Ci.	1800	N.
9	0.2	0.2	Fc.	0.0		0.0			N.
10	0.3	0.3	Fc.Cb.	0.0		0.0		2000	N.
11	0.6	0.4	Cu.	0.2	Ac.	0.0		1000	N.
12	0.3	0.3	Cu.	0.0		0.0		1500	N.
13	0.7	0.7	Cu.	0.0		0.0		1800	N.
14	0.2	0.2	Cu.Fc.	0.0		0.0			N.
15	0.3	0.3	Fc.Cu.	0.0		V	Ci.	1800	N.
16	0.3	0.3	Cu.Fc.	0.0		0.0		1500	N.
17	0.3	0.3	Cu.Fc.	0.0		0.0		1500	N.
18	0.6	0.6	Cu.	0.0		0.0		1500	N.
19	0.3	0.3	Cu.	0.0		0.0		1500	N.
20	0.6	0.6	Cu.	0.0		0.0		800	N.
21	0.7	0.4	Cu.	0.4	As.	0.0		800	N.
22	0.5	0.5	Sc.Cu.	0.0		0.0		800	N.
23	0.7	0.7	Cu.	0.0		0.0		600	N.
24	0.5	0.5	Cu.	V	Ac.	0.0		1200	N.
25	0.4	0.4	Cu.	0.0		0.0		1200	N.
26	0.5	0.5	Cu.	0.0		0.0		1200	N.
27	0.3	0.3	Cu.	0.0		0.0			N.
28	0.6	0.6	Cu.	0.0		0.0		800	N.
29	0.4	0.4	Cu.	0.0		0.0		1800	N.
30	0.3	0.3	Cu.Fc.	0.0		0.0		1200	S.
31	0.4	0.4	Cu.	0.0		V	Ci.	1500	N.

87302

CUADRO TERMO-PLUVIOMETRICO

ESTACIONES	MUNICIPIO	ALTURA mts.	TOTAL mms.	DIAS lluvia	TEMP. med. °C.
ALTA VERAPAZ					
Samac	Cobán	1280	2663.1	142	19.8
Mocca	Panzós	1040	3598.0	179	21.2
Tinajas	"	60	2238.5	120	27.3
Mayaguá	Senahú	300	2857.0	129	25.7
San Juan	"	685	3356.5	151	23.3
Sepacuité	"	980	3525.0	212	21.5
Los Alpes	Tucurú	655	3515.0	179	23.4
Bella Vista	"	1220	3485.0	160	20.1
Guaxac	"	1402	2385.0	169	19.1
BAJA VERAPAZ					
Westfalia	Purulhá	838	2175.5	140	22.3
Jalauté	"	792	2343.5	151	22.6
Monte Blanco	"	914	2493.0	156	21.9
CHIMALTENANGO					
Las Delicias	Acatenango	1280	3040.0	114	19.8
Santa Margarita	"	2000	2628.0	116	15.9
El Potosí	Pochuta	550	3469.0	151	24.1
El Retiro	"	933	2116.0*	90	21.3
La Ceiba	Yepocapa	520	3832.0	118	24.2
Morelia	"	970	5392.0	203	21.4
Santa Sofía	"	790	2740.0	173	22.6
B.V.Panajabal	"	1040	3414.0	156	21.2
S.Rafael Sumatán	"	820	3807.5	179	22.4
CHIQUIMULA					
Chiquimula	Chiquimula	380	420.6	21	25.2
Anguiatú	Concepción	500	1170.6	82	24.4
Agua Blanca	Ipala	890	621.1	69	22.0
Ipala	"	820	510.0	37	22.4
ESCUINTLA					
Escuintla	Escuintla	340	2664.0	122	25.4
Escuintla	"	366	3350.3	---	25.2
El Salto	"	396	3788.1	---	25.1
San Luis	"	488	3312.7	---	24.4
Concepción	"	440	3059.5*	142	24.8
San Andrés Osuna	"	820	5151.5	172	22.4
Obispo	La Democracia	210	2717.5	118	26.3
Obero	Masagua	30	965.7	58	27.6
Santa Maria	"	130	2650.6	91	26.8
Palín	Palín	1130	1705.7	87	20.7
Palín	"	1006	2281.8	---	21.4
Buena Vista	S.Lucia Cotz.	210	4100.5	140	26.3
Santa Lucia	"	340	3651.2	145	25.4
S.José Buena Vista	"	340	3990.7	138	25.4
San José	Pto.San José	0	1664.4	44	27.8

CUADRO TERMO-PLUVIOMETRICO (continuación)

ESTACIONES	MUNICIPIO	ALTURA mts.	TOTAL mms.	DIAS lluvia	TEMP. med. °C.
GUATEMALA					
Observatorio Nacional	Guatemala	1494	1311.7	111	17.9
Facultad de CC NN	"	1487	1004.8	104	17.8
Guatemala	"	1497	1022.5	98	17.9
Guatemala	"	1494	1482.3	---	17.9
El Zapote	"	1372	1128.7	---	19.2
Amatitlán	Amatitlán	1158	1007.4	---	20.4
Fiscal	Palencia	1120	780.2	62	21.3
Morán	Villa Canales	1220	1282.7	71	20.1
Villa Canales	"	1220	1154.7	---	20.1
Villa Nueva	Villa Nueva	1311	1089.5	---	19.7
HUEHUETENANGO					
Maxbal	Barillas	1463	1769.7*		18.7
San Isidro	"	1463	5200.0	226	18.7
IZABAL					
Barrios	Pto. Barrios	0	3763.5	162	27.8
Quiriguá	Los Amates	70	2120.7	149	27.3
Tenedores	"	30	1397.3	87	27.6
Creek	"	55	2992.4	173	27.4
Quiriguá	"	69	2256.8	170	27.3
Pawnee	Morales	21	2395.0	145	27.7
PROGRESO					
Sanarate	Sanarate	810	629.3	39	22.5
El Rancho	S.Agustín Acas.	270	693.4	38	25.9
QUETZALTENANGO					
Observatorio Occidente	Quetzaltenango	2380	2544.3	113	13.8
Santa Bárbara	La Victoria	----	1124.0	103	14.0
Coatepeque	Coatepeque	490	3582.5	125	24.4
Monte Grande	"	340	3554.8	156	25.4
Acultzingo	Colomba	1371	3459.6	188	19.3
La Esmeralda	"	950	6191.0	169	21.7
La Moka	"	1066	3197.3*	187	21.0
Las Mercedes	"	975	3728.0*	136	21.4
La Mina	"	1220	2924.1*	209	20.1
La Viña	"	1371	2152.4*	173	19.3
Vizcaya	"	980	3846.9	158	21.3
Beliz - Helvetia	El Palmar	900	4212.5	191	22.0
El Nil "	"	1371	3312.4	211	19.3
La Suiza "	"	1066	4141.3	194	21.0
Patzulín	"	900	4575.8	221	22.0
Candelaria	Flores C.C.	610	4083.0	179	23.8
QUICHE					
Chichicastenango	Chichicastenango	----	1302.0*	121	14.5

CUADRO TERMO-PLUVIOMETRICO (continuación)

ESTACIONES	MUNICIPIO	ALTURA mts.	TOTAL mms.	DIAS lluvia	TEMP. med. °C.
RETALHULEU					
Subestación	Retalhuleu	240	2172.9	101	26.2
Dolores	El Asintal	670	3923.8	159	23.4
Champerico	Champerico	0	989.2	52	27.7
Muluá	Muluá	340	3666.6	135	25.4
San Felipe	S. Felipe	690	4359.8	136	23.3
La Aurora	"	760	3892.3	172	22.8
El Carmen	S.A.V.S.	520	6130.0*	142	24.2
Liria	N.S.Carlos	760	3936.8	190	22.8
Candelaria Xolhuitz	"	760	4103.0	190	22.8
El Salvador	"	1066	4307.6	196	21.0
La Primavera	S.Martín Zap.	520	3563.0	158	24.2
San Sebastián-Helvetia	S.Sebastián	335	3294.4	134	25.4
Buena Vista	"	500	3422.9	174	24.4
SACATEPEQUEZ					
Antigua	Antigua	1524	980.3	---	18.4
Retana	"	1554	928.6	108	18.4
El Potrero	Ciudad Vieja	1524	1121.8	89	18.4
La Reunión	Alotenango	1432	3524.0	106	19.0
Florencia	S.Lucia M.A.	1980	1309.5	107	16.1
SAN MARCOS					
Ayutla	Ayutla	40	1156.2	73	27.5
El Pensamiento	El Rodeo	700	3900.0	154	23.2
Concepción Candelaria	La Reforma	730	3324.5*	121	23.0
La Igualdad	"	1371	4834.0	186	19.3
La Paz	"	1220	3405.0	167	20.1
Montelimar	Malacatán	820	2681.0*	---	22.5
Mundo Nuevo	"	820	8019.8	---	22.5
San Ignacio	"	730	4520.0	---	23.0
Sonora	"	350	4900.0	---	25.4
San Luis	"	640	9795.0	160	23.6
La Blanca	Ocós	12	823.8*	75	27.7
Armenia	S.Raf.P.deL.C.	1220	3675.0	145	20.1
El Porvenir	San Pablo	1013	4039.1*	171	21.3
Santa Teresa	"	914	6426.5	214	21.9
Alabama Grande	Tumbador	1010	2319.6*	104	21.3
Bola de Oro	"	924	3842.0	177	21.8
El Escobillo	"	610	4330.5	195	23.8
El Perú	"	1334	4077.0	211	19.5
El Rosario	"	790	4100.0	194	22.6
SANTA ROSA					
Cerro Redondo	Barberena	1220	1842.7	138	20.1
Las Viñas	"	1071	1588.2	137	21.0
San Bernardo	Chiquimulilla	457	2920.5	105	24.7
El Amatillo	Oratorio	700	1695.0	100	23.2
La Virgen	"	700	1891.0*	62	23.2

CUADRO TERMO-PLUVIOMETRICO (continuación)

ESTACIONES	MUNICIPIO	ALTURA mts.	TOTAL mms.	DIAS lluvia	TEMP. med. °C.
SOLOLA					
Monte de Oro	Atitlán	1100	4461.0	180	20.8
Olas de Mocá	"	760	4292.0	184	22.8
Pampojilá	S.Lucas Tol.	1524	2019.2	106	18.4
Santa Cruz Quixayá	"	885	2727.0	140	22.0
Santo Tomás Perdido	"	1280	1801.1	113	19.8
SUCHITEPEQUEZ					
Mazatenango	Mazatenango	350	2995.0	114	25.4
La Abundancia	Chicacao	700	4995.5	156	23.2
Los Castaños	"	840	4665.0	170	22.3
Nahualate	"	150	3521.7	138	26.7
El Naranjo	"	1173	4205.5	207	20.4
El Naranjito	"	731	4835.4	211	23.0
Patulul	Patulul	220	3670.5	131	26.2
San Juan Luisiana	"	520	5156.0	140	24.2
Los Tarrales	"	822	2700.2	138	22.4
Palo Gordo	S.Ant.Such.	260	3525.2	133	26.0
Rio Bravo	"	140	2643.9	99	26.7
Chocolá	S.Pablo Joc.	880	4600.0	168	21.2
La Paz	S.Franc.Zap.	760	3195.0	138	22.8
Santa Cecilia	"	810	5623.0	188	22.5
Guatalón	Santa Bárbara	130	2842.7	116	26.8
Mocá	"	910	4377.0	191	21.9
Palmeras	"	305	4015.6	174	25.7
S.Francisco Miramar	"	1066	2568.3	175	21.0
Chinán	S.Miguel Panán	550	3128.2	178	24.2
ZACAPA					
Zacapa	Zacapa	180	447.5	34	26.4

NOTA: * faltan algunos reportes.
--- no se tienen los datos.
Los datos de temperatura media no son definitivos, hasta que se calculen los valores normales.

-1945-

TEMPERATURA

Expresada en Grados Centígrado

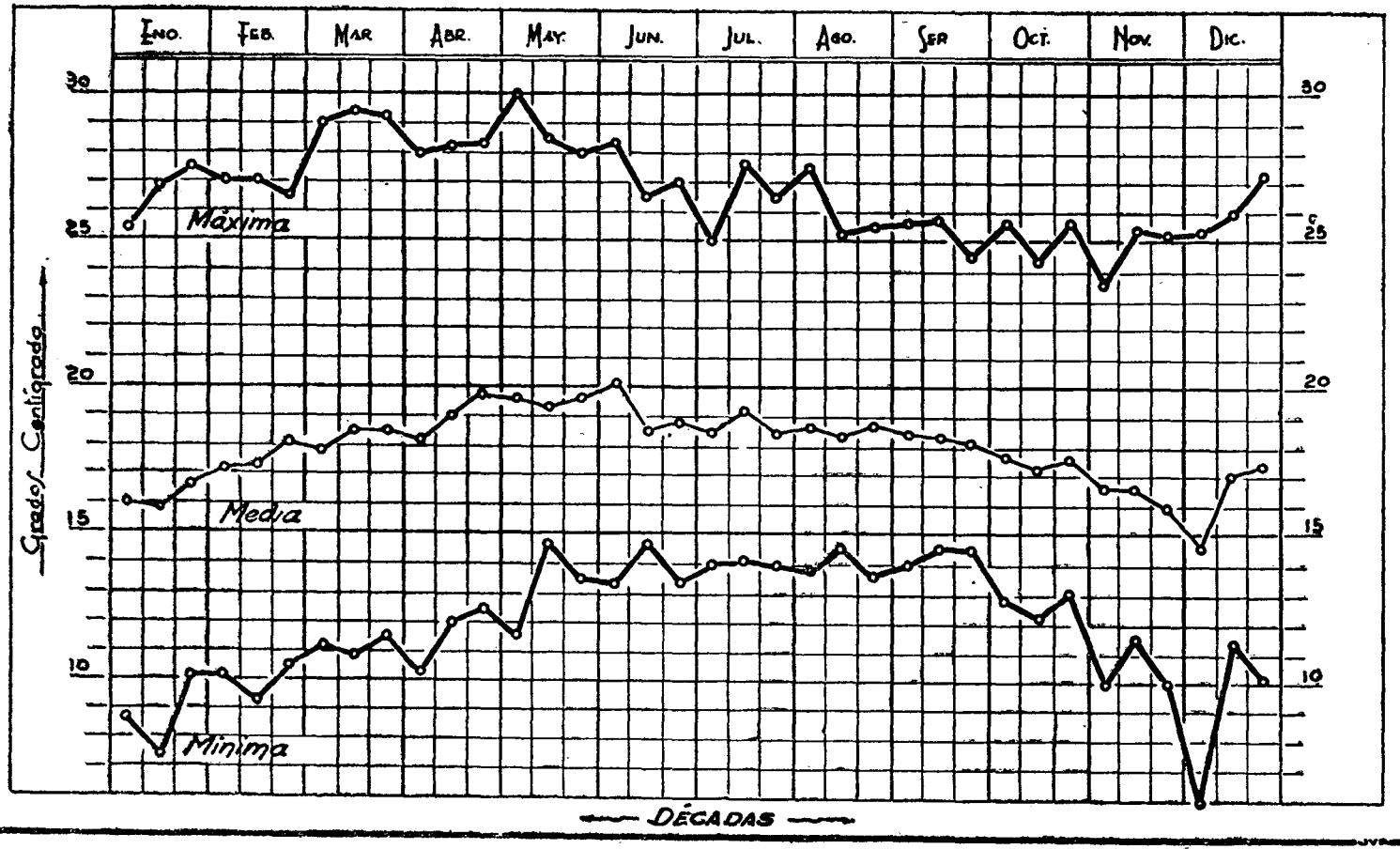

1945 -

PRESIÓN ATMOSFÉRICA

Expresada en milímetros Hg. o Milibares.

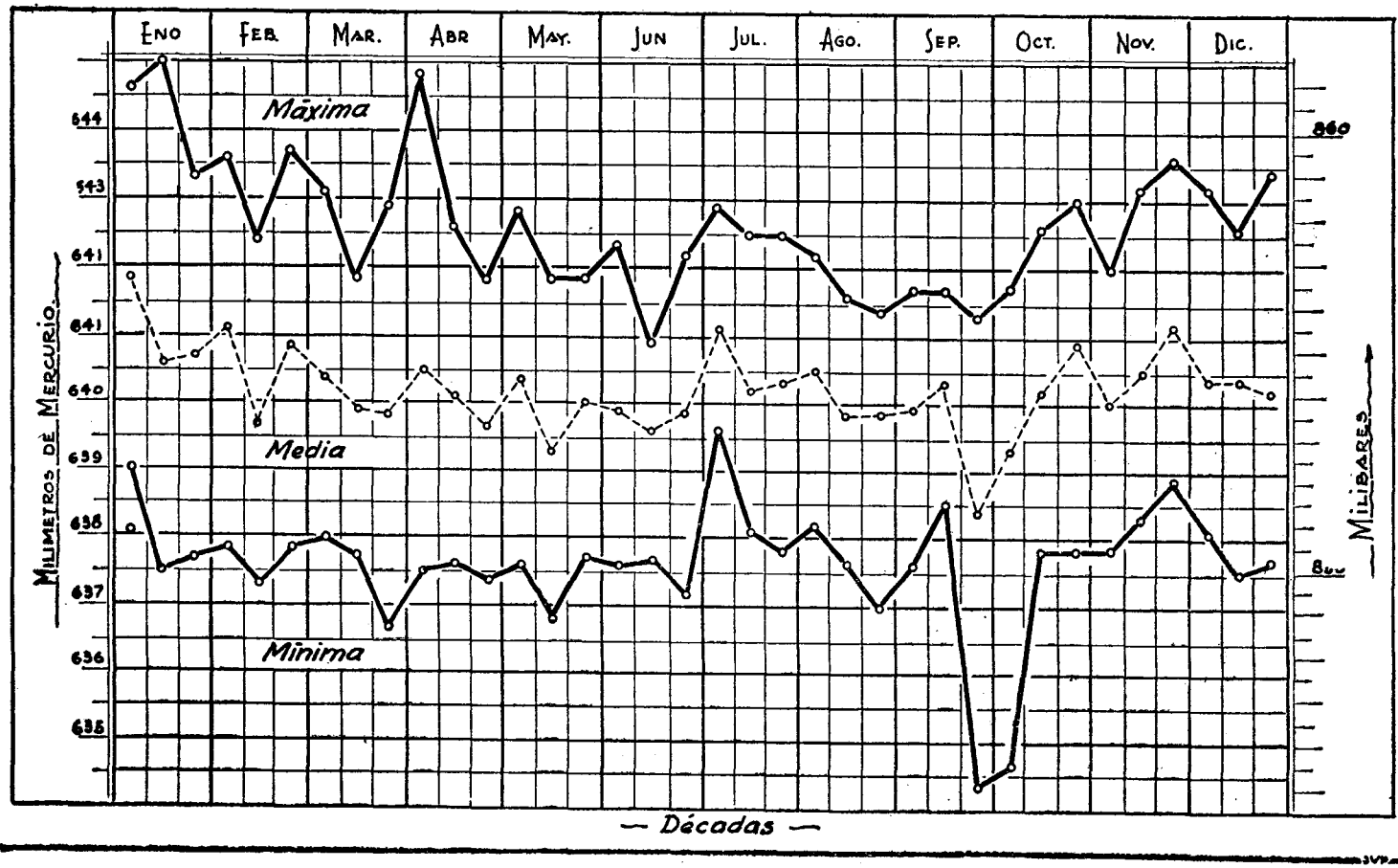

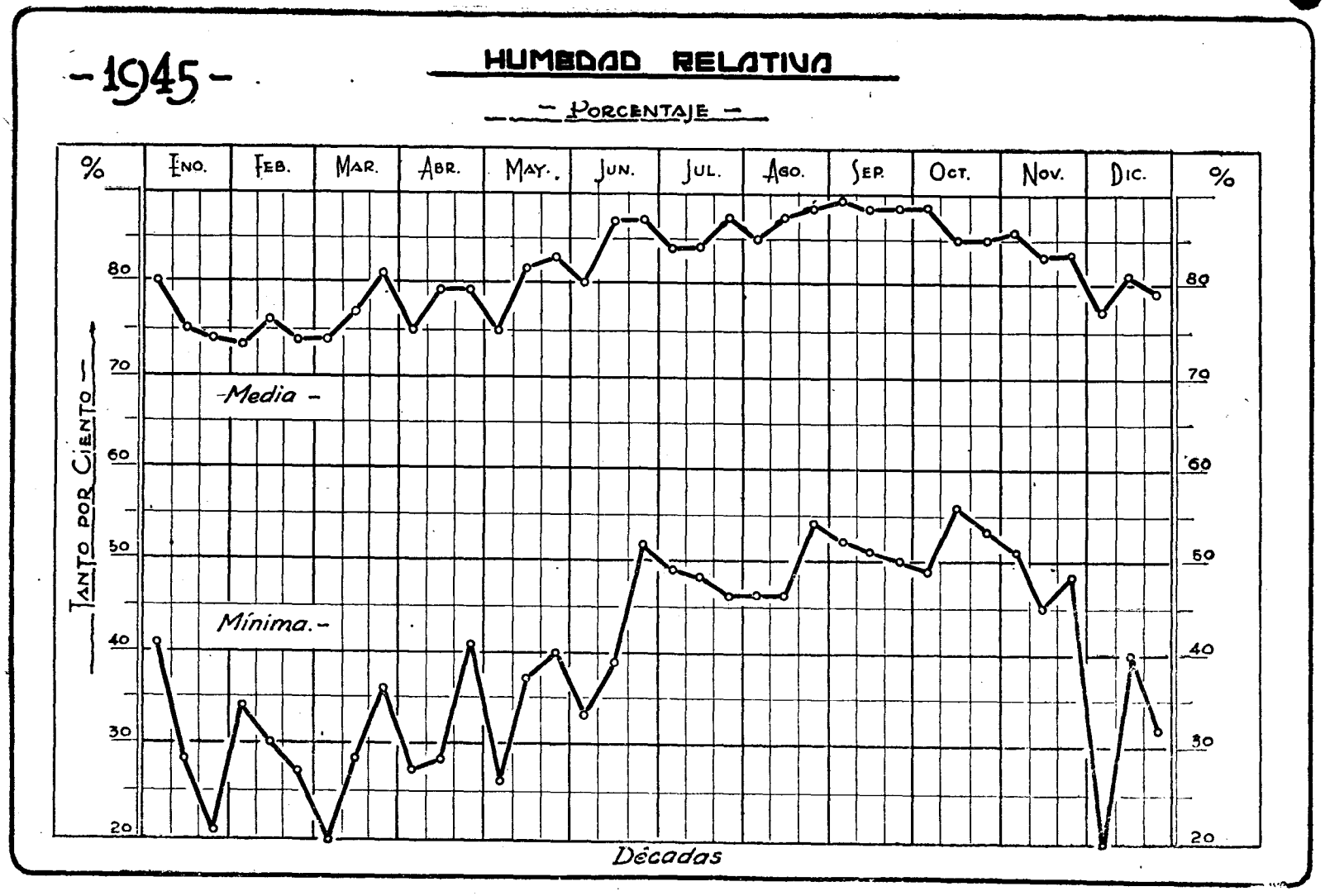
-1945-
HUMEDAD RELATIVA
- PORCENTAJE -
%
ENO.
FEB.
MAR.
ABR.
MAY.
JUN.
JUL.
AGO.
SEP.
OCT.
NOV.
DIC.
%
80
70
60
50
40
30
20
TANTO POR CIENTO
Media -
Mínima.-
Décadas

-1945-

PRECIPITACIÓN

En Milímetros o Litros por Metro² de Superficie.

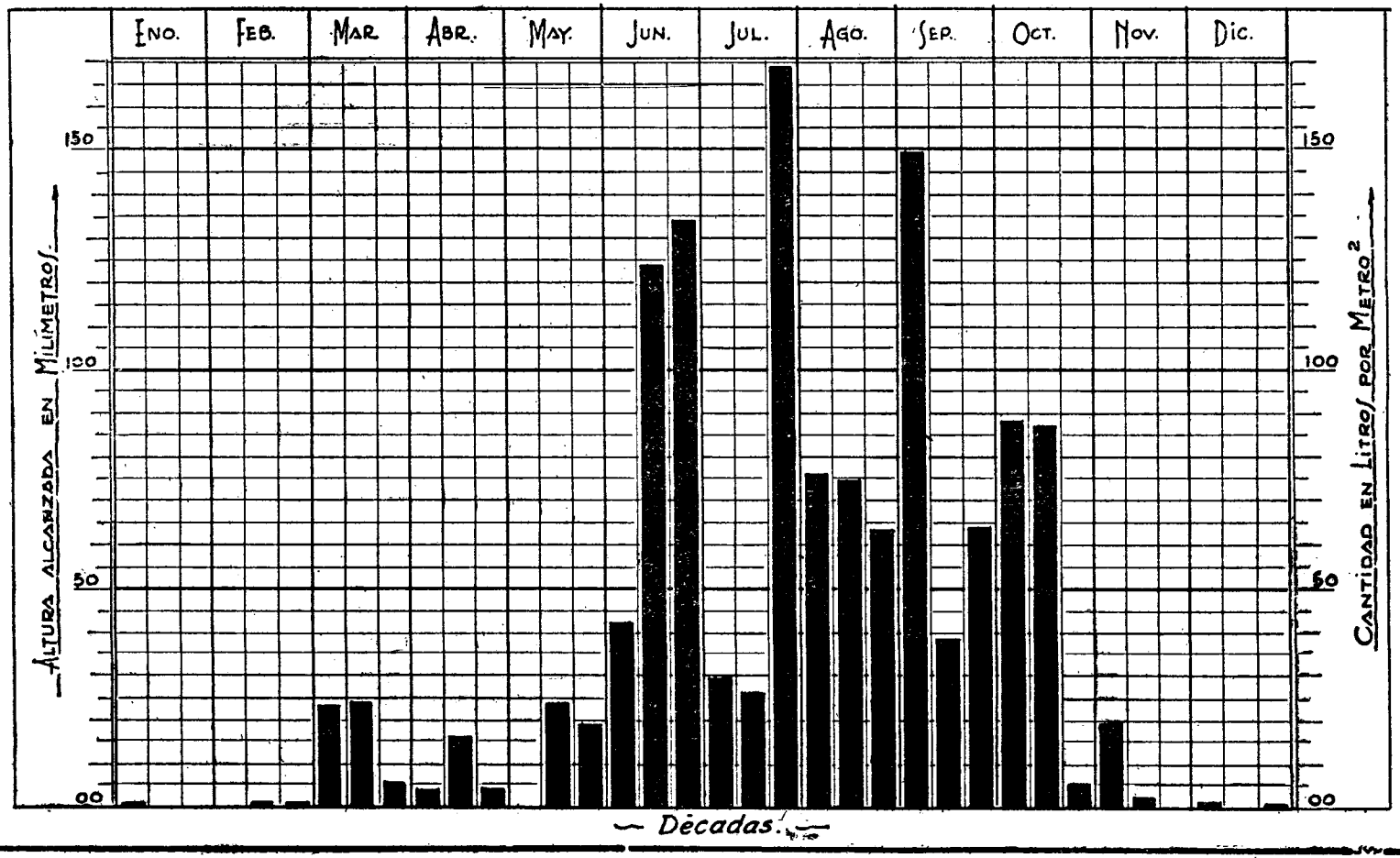

-1945-

EVAPORACIÓN

(En la Sombra.)

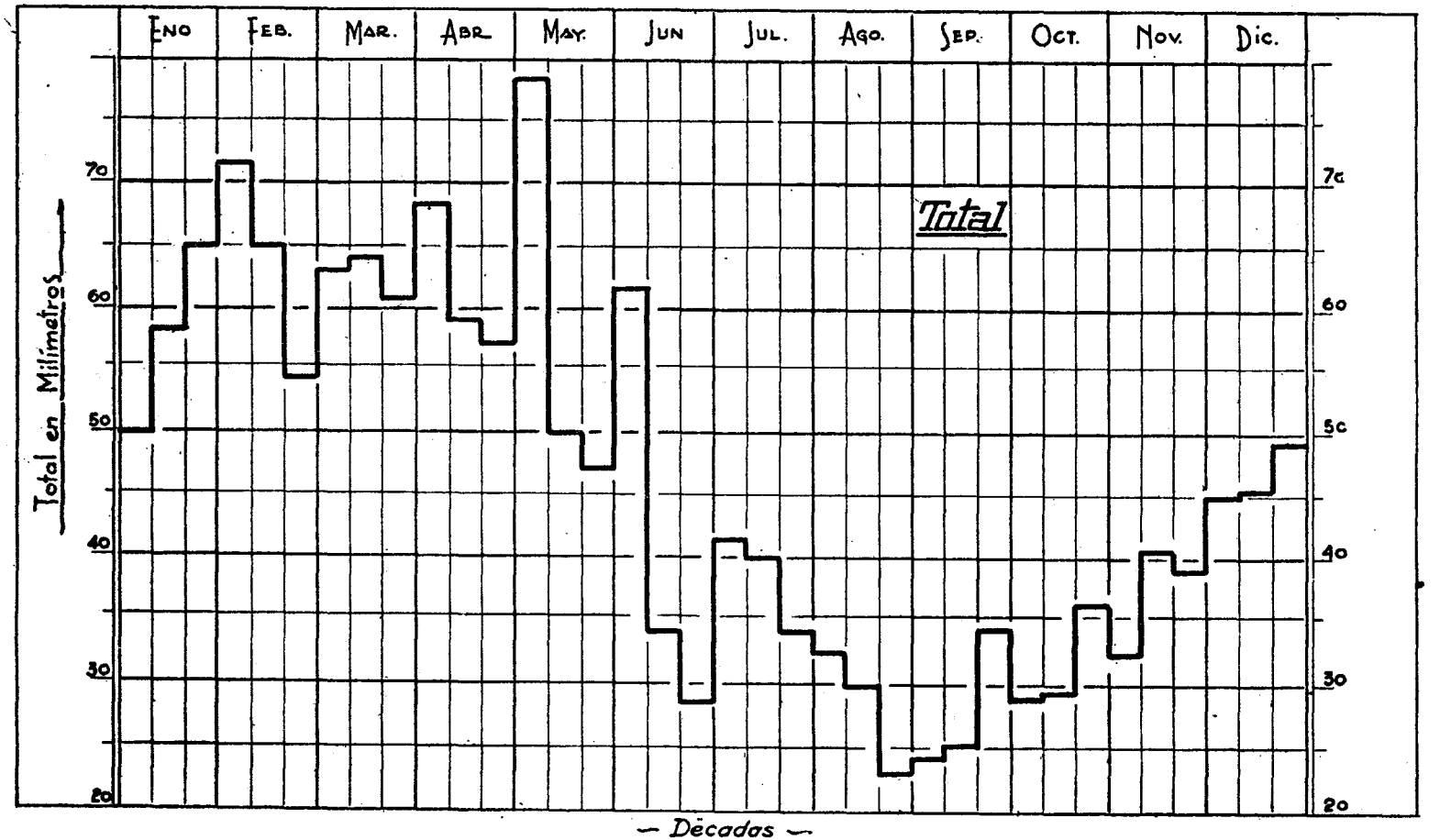

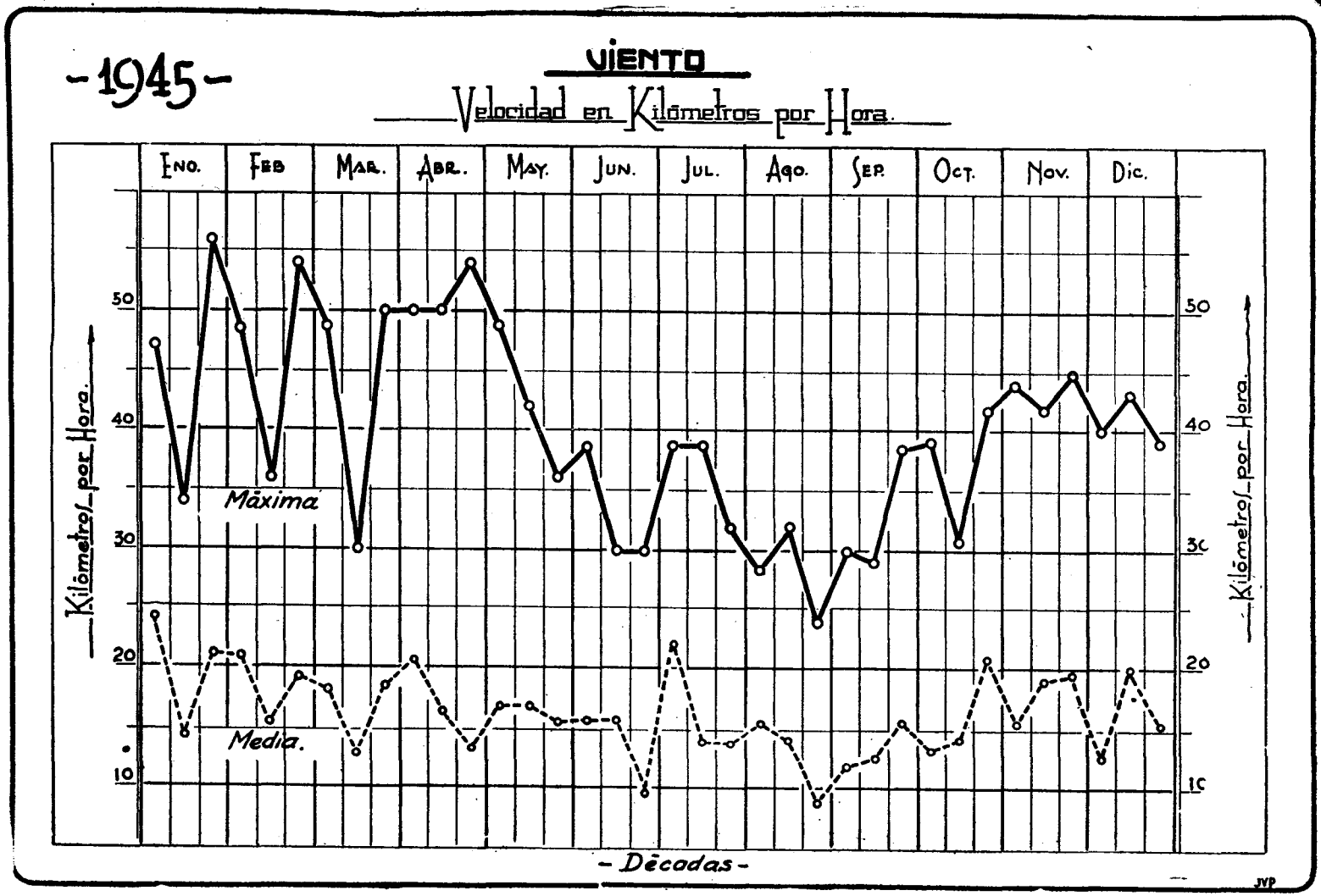
-1945-
VIENTO
Velocidad en Kilómetros por Hora.
Eno.
Feb
Mar.
Abr.
May.
Jun.
Jul.
Ago.
Sep.
Oct.
Nov.
Dic.
Kilómetros por Hora.
50
40
30
20
10
Máxima
Media.
- Décodas -
JVP

VIENTO

-1945-

Dirección Dominante en función de la frecuencia

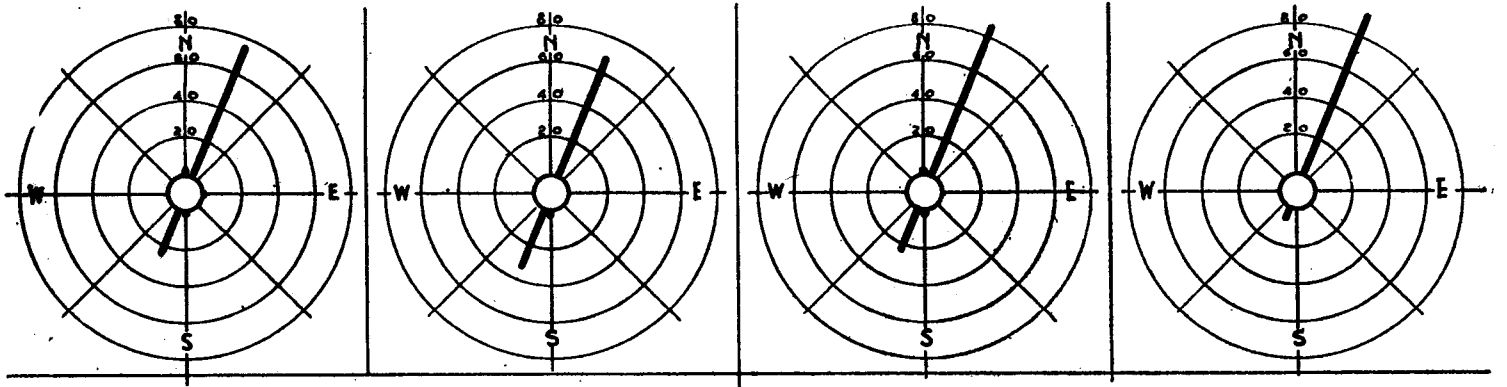

Dirección Dominante en función del kilometraje [%]

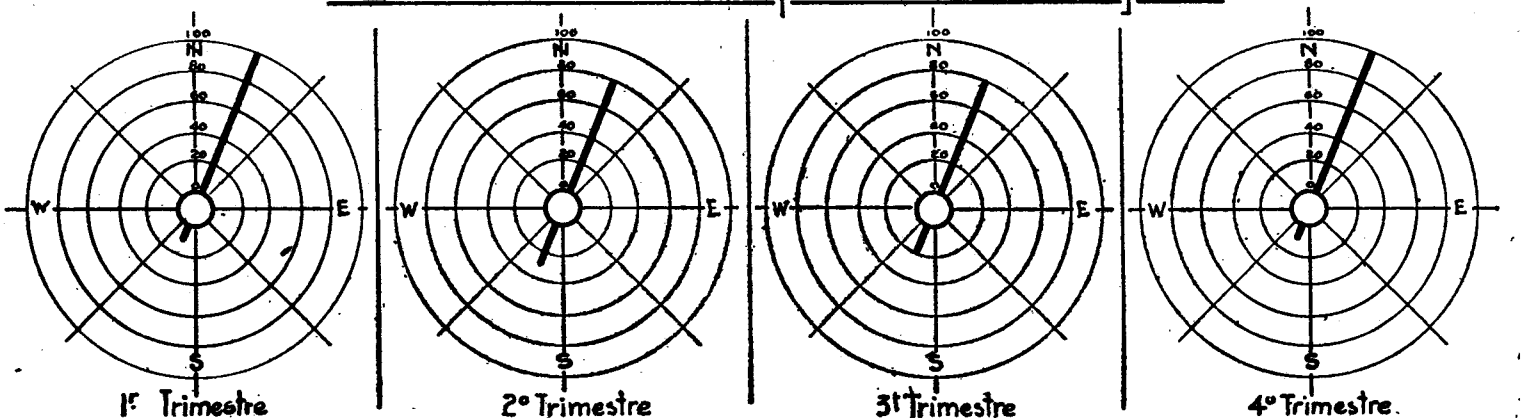

1º Trimestre | 2º Trimestre | 3º Trimestre | 4º Trimestre

-1945-

INSOLACIÓN

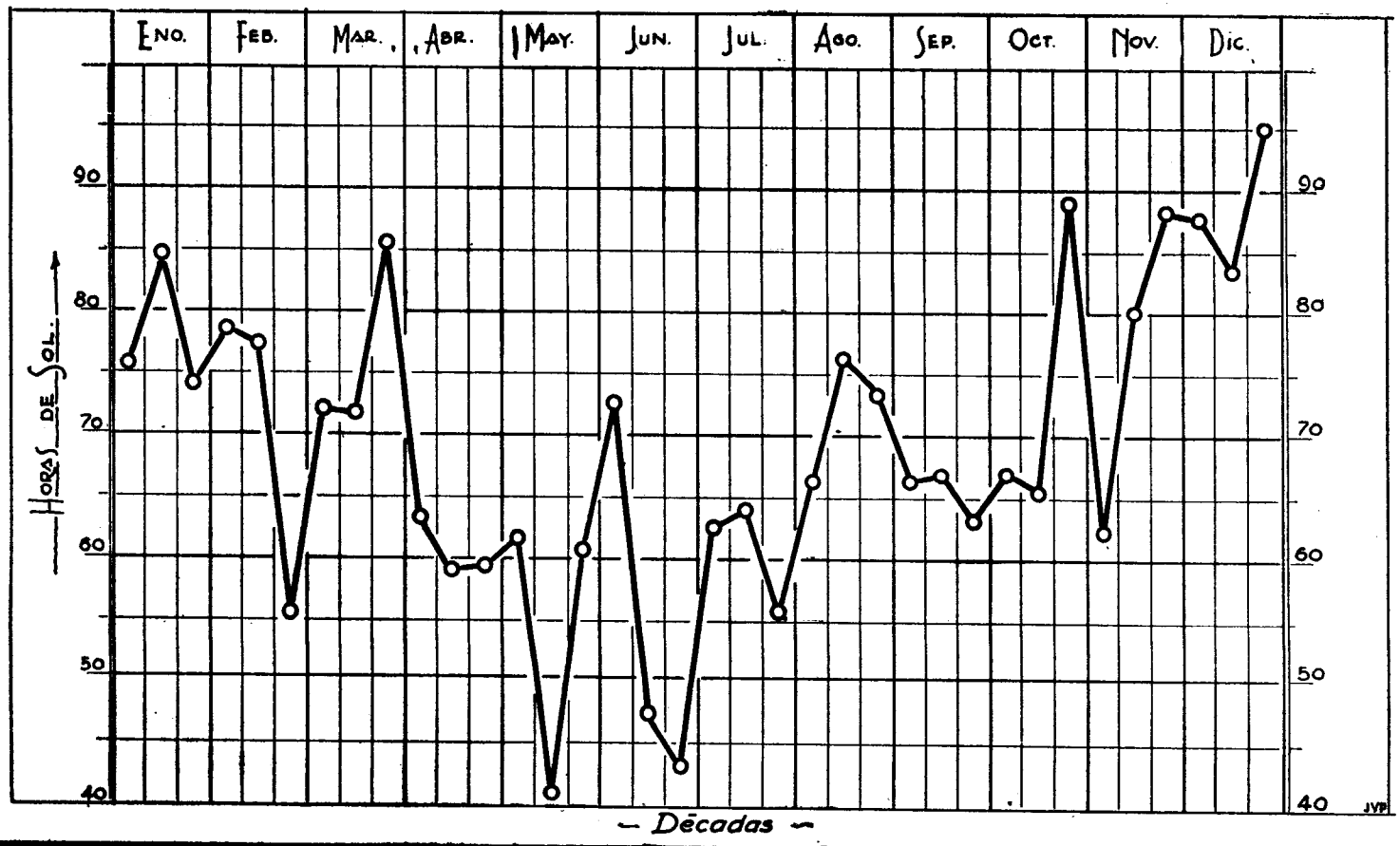

-1945-

NEBULOSIDAD

(Cielo Cubierto = 1.0)

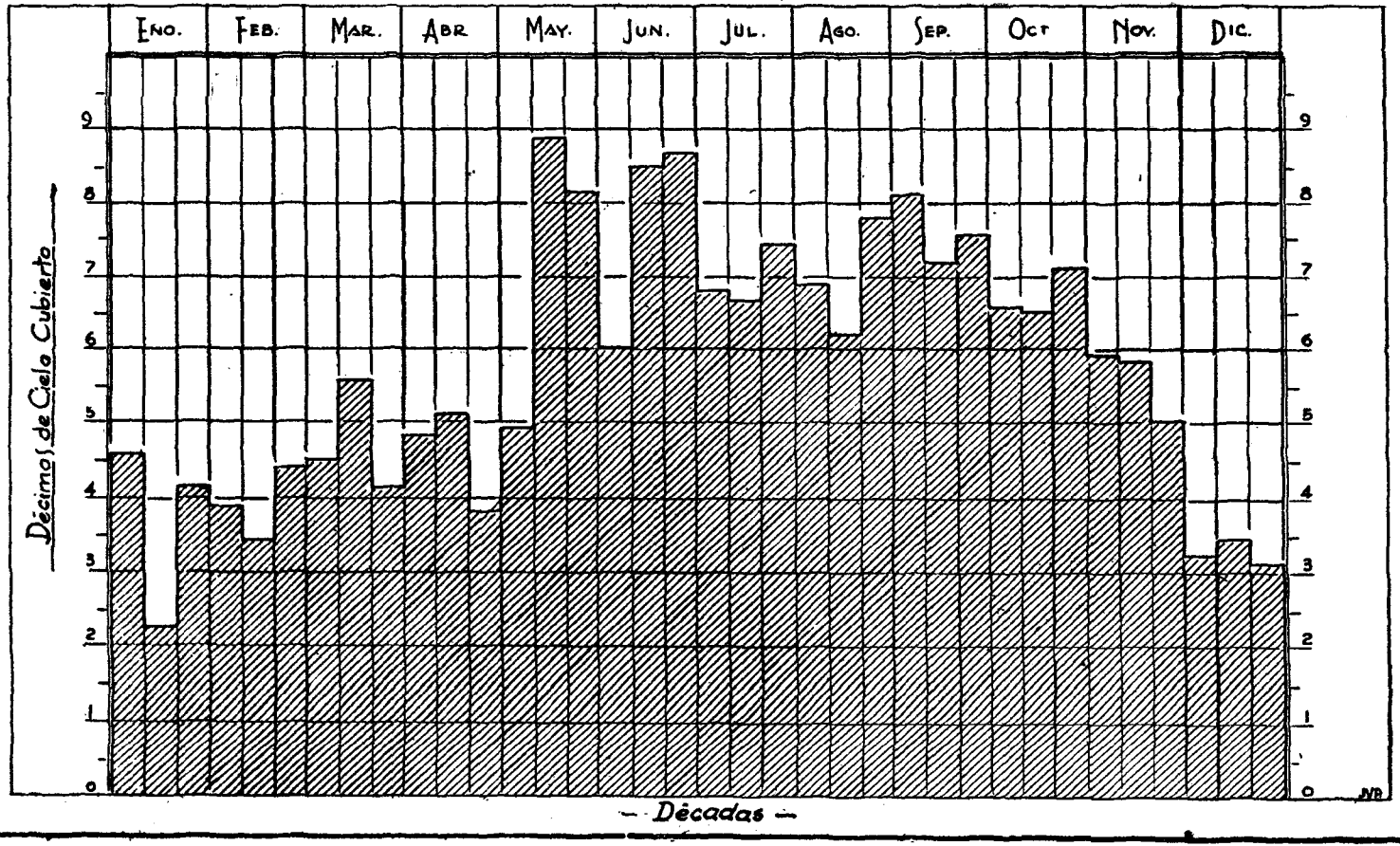

OBSERVATORIO NACIONAL — CUADRO TERMO-PLUVIOMETRICO EN CENTIGRADOS Y MILIMETROS — AÑO 1945

ESTACION	MUNICIPIO	PROPIETARIO	ALTURA	ENE.	FEB.	MAR.	ABR.	MAY.	JUN.	JUL.	AGO.	SEP.	OCT.	NOV.	DIC.	TOTAL	DIAS lluvia	TEMPERATURA en °C. Media	Max.	Min.
ALTA VERAPAZ																				
Samac	Cobán	Gustav Helmrich	1280	70.0	42.0	99.0	37.5	328.0	263.5	175.0	289.1	579.5	622.0	289.0	157.5	2663.1	142	19.8		
Mocca	Panzós	M. L. Hempstead	1040	0.0	49.0	63.0	0.0	222.0	400.0	677.0	632.0	694.5	434.5	262.0	164.0	3598.0	179	21.2		
Tinajas		Betty v. de Shaw	60	17.3	0.0	0.0	0.0	175.0	340.9	546.4	367.5	520.2	121.9	93.7	55.6	2238.5	120	27.3		
Mayaguá	Senahú	Cía. Holandesa	300	68.0	23.0	28.0	13.0	147.0	379.0	555.0	575.0	740.0	195.0	99.0	35.0	2857.0	129	25.7		
San Juan	"	Nacional	685	43.0	65.0	38.0	47.0	266.5	307.0	734.0	552.0	772.0	274.0	118.0	140.0	3356.5	151	23.3	30.0	18.0
Sepacuité	"	Benjamin Champney	980	141.4	82.3	54.9	35.9	184.4	593.5	521.9	380.2	700.2	330.0	303.9	196.4	3525.0	212	21.5	30.0	5.5
Los Alpes	Tucurú	M. L. Hempstead	655	103.0	56.0	11.0	10.0	250.0	449.0	594.0	488.0	889.0	301.0	251.0	113.0	3515.0	179	23.4		
Bella Vista	"	Josefina de Ardébol	1220	108.0	70.0	16.0	26.0	232.0	490.0	452.0	561.0	817.0	316.0	279.0	118.0	3485.0	160	20.1		
Snaxac	"	"	1402	50.0	45.0	25.0	32.0	165.0	410.0	260.0	330.0	642.0	220.0	130.0	76.0	2385.0	169	19.1		
BAJA VERAPAZ																				
Westfalia	Purulhá	Nacional	838	59.0	72.0	15.0	18.5	145.0	391.5	388.0	363.0	392.5	126.0	106.0	99.0	2175.5	140	22.3	38.0	9.0
Jalauté	"	"	792	50.0	33.0	10.0	46.0	237.5	603.0	461.0	177.0	353.0	163.0	96.0	114.0	2343.5	151	22.6	37.0	-10.0
Monte Blanco	"	"	914	162.0	43.0	31.0	32.0	123.0	321.0	375.5	396.5	456.0	238.5	167.5	147.0	2493.0	156	21.9	35.0	16.0
CHIMALTENANGO																				
Las Delicias	Acatenango	Carmen v. de La Puente	1280	0.0	0.0	164.0	45.0	416.0	345.0	325.0	680.0	630.0	375.0	35.0	25.0	3040.0	114	19.8	37.0	11.0
Santa Margarita	"	Wyld Hnos. & Co.	2000	2.0	0.0	118.0	23.0	268.0	253.0	380.0	536.0	701.0	304.0	21.0	22.0	2628.0	116	15.9		
El Potosí	Pochuta	Nacional	550	0.0	2.0	63.0	72.0	443.0	411.0	552.0	537.0	623.0	634.5	54.5	77.0	3469.0	151	24.1		
El Retiro	"	Ramiro Samayoa	933	-----	-----	-----	-----	-----	69.0	505.0	464.0	523.0	445.0	-----	110.0	2116.0	90	21.3		
La Ceiba	Yepocapa	Cía. Holandesa	520	45.0	0.0	152.0	20.0	583.0	575.0	487.0	550.0	653.0	573.0	98.0	96.0	3872.0	118	24.2	32.0	16.0
Morelia	"	Nacional	970	63.0	26.0	193.0	67.0	764.0	664.0	858.0	906.0	728.0	857.0	169.0	97.0	5392.0	203	21.4	33.0	14.0
Santa Sofía	"	"	790	43.0	0.0	101.0	24.0	690.0	300.0	375.0	426.0	352.0	219.0	99.0	111.0	2740.0	173	22.6		
Buena Vista Panajabal	"	Carmen A. de Kandt	1040	64.0	0.0	134.0	21.0	483.0	432.0	646.0	418.0	719.0	408.0	41.0	48.0	3414.0	156	21.2		
San Rafael Sumatán	"	Salvador Delgado E.	820	26.0	0.0	112.0	21.0	559.5	531.0	668.0	679.5	514.0	531.0	104.5	61.0	3807.5	179	22.4		
CHIQUIMULA																				
Chiquimula	Chiquimula	Ferrocarriles de C.A.	380	0.0	0.0	0.0	0.0	77.5	58.4	88.9	62.2	91.7	41.9	0.0	0.0	420.6	21	25.2		
Anguiatú	Concepción	"	500	0.0	0.0	0.0	26.9	34.3	135.1	232.4	222.3	323.3	152.4	38.1	5.8	1170.6	82	24.4		
Agua Blanca	Ipala	"	890	0.0	0.0	2.3	19.1	24.1	129.5	117.4	112.3	142.0	47.2	27.2	0.0	621.1	69	22.0		
Ipala		"	820	0.0	0.0	0.0	17.8	22.9	119.9	120.7	54.6	115.6	48.3	10.2	0.0	610.0	37	22.4		
ESCUINTLA																				
Escuintla	Escuintla	Ferrocarriles de C.A.	340	0.0	0.0	15.8	18.5	654.6	393.7	292.9	473.2	372.1	443.2	0.0	0.0	2664.0	122	25.4		
Escuintla	"	Empresa Eléctrica	366	1.0	1.0	25.0	50.0	644.0	401.0	497.0	632.0	574.0	511.0	10.3	4.0	3350.3	---	25.2		
El Salto	"	"	396	0.0	9.0	21.0	60.0	562.0	568.0	527.0	720.0	604.0	709.0	6.6	1.5	3788.1	---	25.1		
San Luis	"	"	488	0.0	6.0	25.0	50.0	490.0	535.0	469.0	583.0	529.0	617.0	7.0	1.7	3312.7	---	24.4		
Concepción	"	Nacional	440	0.0	0.0	18.0	25.0	522.0	469.0	423.5	596.0	490.0	474.0	42.0	-----	3059.5	142	24.8	38.0	17.0
San Andrés Osuna	"	"	820	28.0	0.0	57.0	52.0	735.5	677.0	788.0	832.0	794.0	730.0	248.0	210.0	5151.5	172	22.4		
Obispo	La Democracia	Ferrocarriles de C.A.	210	0.0	0.0	22.9	0.0	356.4	324.4	476.2	387.4	543.1	483.4	109.7	14.0	2717.5	118	26.3		
Obero	Masagua	"	30	0.0	0.0	0.0	5.1	85.9	90.2	92.2	197.8	170.4	317.0	7.1	0.0	965.7	58	27.6		
Santa María	"	"	130	0.0	0.0	0.0	0.0	153.4	411.5	492.3	359.4	448.8	445.8	39.4	0.0	2650.6	91	26.8		
Palín	Palín	"	1130	0.0	0.0	20.3	3.1	294.6	222.3	248.4	168.9	283.2	450.9	0.0	14.0	1705.7	87	20.7		
Palín	"	Empresa Eléctrica	1006	0.0	3.0	26.0	15.0	356.0	307.0	362.0	345.0	570.0	294.0	2.6	1.2	2281.8	---	21.4		
Buena Vista	Santa Lucía Cotz.	Ferrocarriles de C.A.	210	8.9	0.0	55.9	48.6	393.4	532.6	550.2	681.7	536.2	1053.3	189.2	50.3	4100.6	140	26.3		
Santa Lucía	"	"	340	22.9	0.0	96.0	21.3	407.9	425.4	679.4	331.0	663.5	835.7	116.8	51.3	3651.2	145	25.4		
San José Buena Vista		Fleishman & Cristiani	340	6.0	0.0	9.7	46.0	429.0	440.0	695.0	739.0	604.0	791.0	167.0	64.0	3990.7	138	25.4		
San José	Puerto San José	Ferrocarriles de C.A.	0	0.0	0.0	38.1	0.0	88.0	295.0	194.3	421.6	256.0	346.0	25.4	0.0	1664.4	44	27.8		
GUATEMALA																				
Observatorio Nacional	Guatemala	Nacional	1494	0.0	0.0	52.9	23.0	42.3	296.0	223.0	213.4	256.2	180.9	21.6	1.5	1311.7	111	17.9	30.3	6.0
Facultad de CC NN	"	Universidad	1487	0.0	0.5	13.8	16.8	66.8	190.0	201.0	278.7	145.0	70.7	21.5	0.0	1004.8	104	17.8	29.5	5.8
Guatemala	"	Ferrocarriles de C.A.	1497	0.5	0.5	13.0	13.2	90.2	200.4	153.4	222.5	228.4	86.4	14.0	0.0	1022.5	98	17.9		
Guatemala	"	Empresa Eléctrica	1494	0.0	1.0	21.0	18.0	87.0	305.0	262.0	295.0	384.5	107.0	1.8	0.0	1482.3	---	17.9		
El Zapote	"	"	1372	0.0	0.0	17.0	9.0	54.0	238.0	189.0	280.0	234.0	105.0	2.7	0.0	1128.7	---	19.2		
Amatitlán	Amatitlán	"	1158	0.0	0.0	4.0	3.0	46.0	190.0	156.0	185.0	320.0	103.0	0.4	0.0	1007.4	---	20.4		
Fiscal	Palencia	Ferrocarriles de C.A.	1120	0.0	0.0	3.8	0.0	59.4	170.4	106.2	243.6	145.5	45.7	5.1	2.5	780.2	62	21.3		
Morán	Villa Canales	"	1220	0.0	0.0	2.8	2.8	52.1	260.6	252.7	233.9	338.6	139.2	0.0	0.0	1282.7	71	20.1		
Villa Canales	"	Empresa Eléctrica	1220	0.0	0.0	0.0	0.0	44.0	196.0	225.0	238.0	346.0	105.0	0.7	0.0	1154.7	---	20.1		
Villa Nueva	Villa Nueva	"	1311	0.0	0.0	13.0	4.0	51.0	264.0	183.0	152.0	287.0	135.0	0.5	0.0	1089.5	---	19.7		
HUEHUETENANGO																				
Maxbal	Barillas	Exp. Plantations Inc.	1463	133.9	66.3	62.5	57.7	422.9	422.4	604.0	-----	-----	-----	-----	-----	1769.7	---	18.7		
San Isidro	"	"	1463	172.0	114.3	89.4	65.0	554.2	554.2	654.0	697.2	814.1	562.9	513.8	408.9	5200.0	226.	18.7		
IZABAL																				
Barrios	Puerto Barrios	Ferrocarriles de C.A.	0	123.7	508.5	79.0	58.9	256.5	335.0	440.9	410.7	644.6	392.4	379.2	134.1	3763.5	162	27.8		
Quiriguá	Los Amates	"	70	68.6	230.8	41.7	0.0	266.2	269.0	124.7	280.4	405.4	182.4	212.6	38.9	2120.7	149	27.3		
Tenedores	"	"	30	8.9	50.8	2.5	0.0	166.4	69.9	119.4	238.8	345.7	154.9	224.8	15.2	1397.3	87	27.6		
Creek	"	United Fruit Co.	55	124.0	32.0	39.4	2.0	303.0	391.9	199.6	421.4	638.3	299.2	401.6	140.0	2992.4	173	27.4	38.9	12.2
Quiriguá	"	"	69	91.7	35.8	37.3	0.0	248.2	319.5	155.2	326.9	490.0	223.8	273.8	54.6	2256.8	170	27.3	38.9	12.2
Pawnee	Morales	"	21	144.5	43.2	18.3	2.5	324.9	371.9	160.8	250.2	332.0	278.1	354.3	114.3	2395.0	145	27.7	38.9	11.7
PROGRESO																				
Sanarate	Sanarate	Ferrocarriles de C.A.	810	0.0	0.0	0.0	25.4	111.8	109.2	35.6	122.7	163.6	61.0	0.0	0.0	629.3	39	22.5		
El Rancho	San Agustín Acas.		270	0.0	0.0	0.0	0.0	185.4	161.3	57.2	36.8	161.3	91.4	0.0	0.0	693.4	38	25.9		
QUETZALTENANGO																				
Observatorio Occidente	Quetzaltenango	H.Fernández de León	2380	0.0	0.2	5.1	18.1	11.7	116.5	1118.0	361.5	305.8	588.0	19.4	0.0	2544.3	113	13.8	25.1	-13.2
Santa Bárbara	La Victoria	Oscar Díaz	2395	0.0	0.0	13.5	7.0	158.0	158.0	166.0	161.5	175.5	227.0	57.5	0.0	1124.0	103	15.7		
Costepeque	Costepeque	Ferrocarriles de C.A.	490	17.8	0.0	68.6	0.0	281.2	622.8	560.1	594.1	582.4	604.5	228.1	22.9	3582.5	125	24.4		
Monte Grande	"	Goicolea Hnos.	340	2.5	0.0	101.6	6.1	475.7	527.8	365.2	502.9	602.7	695.2	194.1	81.0	3554.8	156	25.4		
Acultzingo	Colomba	Gordon Smith & Co.	1371	9.4	0.0	153.9	13.2	347.2	523.8	551.9	487.9	593.8	612.4	87.4	78.7	3459.6	188	19.3	28.9	8.9
La Esmeralda	"	Enrique Herman	950	0.0	0.0	148.0	60.0	743.0	1075.0	956.0	1075.0	916.0	874.0	296.0	48.0	6191.0	169	21.7		
La Moka	"	Cía. Holandesa	1066	3.0	3.0	96.5	22.5	361.1	437.1	509.0	479.0	472.1	647.1	166.5	360.5	3557.8	185	21.0		
Las Mercedes	"	Nacional	975	0.0	3.0	135.0	9.0	490.0	543.0	535.0	614.0	719.0	680.0	-----	-----	3728.0	136	21.4		
La Mina	"	Cía. Holandesa	1220	4.9	5.9	104.8	33.3	305.1	432.9	429.0	482.5	471.0	497.7	157.0	44.5	2968.6	215	20.1		
La Viña	"	"	1371	1.4	20.0	91.0	11.0	247.0	285.0	300.0	281.0	351.0	455.0	110.0	29.0	2181.4	180	19.3		
Vizcaya	"	Goicolea Hnos.	980	0.0	0.0	125.0	34.3	505.2	473.0	446.3	682.8	612.5	717.3	170.7	79.8	3846.9	158	21.3		
Beliz - Helvetia	El Palmar	Gordon Smith & Co.	900	6.9	0.0	74.7	18.0	488.2	741.9	655.3	566.9	686.6	728.7	210.8	34.5	4212.5	191	22.0	30.6	11.1
El Nil	"	"	1371	9.1	0.0	122.9	3.6	325.1	500.3	584.2	448.6	596.4	546.9	94.5	80.8	3312.4	211	19.3		
La Suiza	"	"	1066	24.9	0.0	61.7	9.7	459.5	652.8	705.6	550.2	658.9	771.6	202.2	44.2	4141.3	194	21.0		
Patzulín	"	"	900	3.6	0.0	53.3	18.2	516.9	829.8	624.3	691.9	604.0	760.2	304.3	169.2	4575.8	221	22.0		
Candelaria	Flores C.C.	Cía. Holandesa	610	5.0	0.0	88.0	19.0	521.0	509.0	591.0	672.0	731.0	666.0	221.0	60.0	4083.0	179	23.8		
QUICHE																				
Chichicastenango	Chichicastenango	Alfredo Franke	2100	-----	-----	-----	----	137.0	220.0	215.0	165.0	345.0	183.0	24.0	13.0	1302.0	121	15.4		
RETALHULEU																				
Subestación	Retalhuleu	Nacional	240	0.0	0.0	0.0	0.0	656.0	790.0	152.6	376.7	158.1	39.5	0.0	0.0	2172.9	101	26.2	36.0	13.9
Dolores	El Asintal	Gordon Smith & Co.	670	2.5	0.0	40.6	16.5	405.1	671.8	699.6	415.0	659.1	689.6	259.1	74.9	3923.8	159	23.4	28.9	16.7
Champerico	Puerto Champerico	Ferrocarriles de C.A.	0	0.0	0.0	52.1	10.2	49.5	190.8	179.8	128.3	81.3	289.6	7.6	0.0	989.2	52	27.7		
Muluá	Muluá	"	340	0.0	0.0	80.8	8.4	401.3	535.4	463.3	526.3	516.9	895.4	181.6	57.2	3666.6	135	25.4		
San Felipe	San Felipe	"	690	0.0	0.0	27.9	8.9	485.6	642.6	685.3	623.3	395.2	1057.9	309.9	123.2	4359.8	136	23.3		
La Aurora	"	Cía. Holandesa	760	11.4	0.0	48.8	3.1	539.9	777.4	384.4	544.0	542.7	724.2	196.0	120.4	3892.3	172	22.8		
El Carmen	San Andrés Villa Seca	Nacional	520	5.0	0.0	57.0	31.0	928.0	1036.0	1040.0	972.0	723.0	991.0	347.0	-----	6130.0	142	24.2		
Liria	Nuevo San Carlos	Cía. Holandesa	760	4.7	0.0	81.2	26.9	416.5	652.7	575.4	526.9	672.3	633.7	258.9	87.6	3936.8	190	22.8		
Candelaria Xolhuitz	"	Nacional	760	0.0	5.0	81.0	28.5	539.0	676.0	663.5	480.0	624.0	640.5	305.0	60.5	4103.0	190	22.8		
El Salvador	"	Cía. Holandesa	1066	0.0	1.5	81.9	23.8	591.3	750.2	687.2	463.4	617.3	743.6	271.9	75.5	4307.6	196	21.0		
La Primavera	San Martín Zap.	"	520	5.0	0.0	76.0	5.0	484.0	579.0	462.0	608.0	484.0	692.0	113.0	55.0	3563.0	158	24.2		
San Sebastián	San Sebastián	Gordon Smith & Co.	335	0.0	0.0	82.0	21.6	438.7	458.5	276.4	569.7	591.3	537.7	249.7	68.8	3294.4	134	25.4		
Buena Vista	"	Conrado Mezger Sucs.	500	14.7	1.8	81.5	10.2	491.2	499.6	435.7	439.4	513.3	649.0	204.7	81.8	3422.9	174	24.4	35.5	17.0
SACATEPEQUEZ																				
Antigua	Antigua	Empresa Eléctrica	1524	0.0	0.0	10.0	7.0	69.0	211.0	152.0	216.0	187.0	126.0	2.3	0.0	980.3	---	18.4		
Retana	"	Pedro G. Cofiño	1554	0.0	0.0	11.7	12.2	49.0	183.9	146.2	225.0	176.3	111.5	11.9	1.0	928.6	108	18.4	30.0	4.0
El Potrero	Ciudad Vieja	Herrera Hnos.	1524	0.0	0.0	22.9	15.2	53.3	231.1	190.5	229.5	153.3	205.7	20.3	0.0	1121.8	89	18.4		
La Reunión	Alotenango	-----	1432	31.5	2.0	75.0	21.5	342.0	615.5	557.5	692.5	682.5	373.0	55.0	76.5	3524.0	106	19.0		
Florencia	S.Lucía Milpas Altas	Salazar Hnos.	1980	0.0	0.0	7.5	9.5	88.5	248.5	245.5	327.5	206.0	165.5	10.0	1.0	1309.5	107	16.1		
SAN MARCOS																				
Ayutla	Ayutla	Ferrocarriles de C.A.	40	0.0	0.0	0.0	0.0	92.0	138.7	67.5	151.8	280.2	370.3	55.9	0.0	1156.2	73	27.5		
El Pensamiento	El Rodeo	Cía. Holandesa	700	0.0	3.6	198.6	67.8	450.6	540.0	593.9	538.5	548.6	629.4	303.0	26.0	3900.0	154	23.2		
Concepción Candelaria	La Reforma	Nacional	730	101.0	0.0	229.5	23.0	706.0	595.0	584.0	448.5	637.5	-----	-----	-----	3324.5	121	23.0		
La Igualdad	"	"	1371	6.0	4.0	146.0	31.0	651.0	631.0	735.0	649.0	1039.0	700.0	192.0	50.0	4834.0	186	19.3		
La Paz	"	Walter Hannstein	1220	6.0	0.0	127.0	9.0	428.0	532.0	437.0	442.0	643.0	550.0	171.0	60.0	3405.0	167	20.1		
Montelimar	Malacatán	Nacional	820	50.0	0.0	185.0	16.0	633.0	-----	-----	-----	-----	1047.0	605.0	145.0	2681.0	---	22.5	34.0	15.0
Mundo Nuevo	"	"	820	101.0	0.0	230.0	0.0	1060.0	1233.0	740.8	1031.0	1371.0	1320.0	676.0	257.0	8019.8	---	22.5		
San Ignacio	"	"	730	23.0	0.0	112.0	0.0	446.0	478.0	290.0	433.0	1160.0	926.0	513.0	139.0	4520.0	---	23.0		
Sonora	"	"	350	49.0	0.0	93.0	0.0	411.0	411.0	550.0	388.0	1040.0	1264.0	580.0	114.0	4900.0	---	25.4		
San Luis	"	"	640	25.0	5.0	140.0	95.0	1255.0	1040.0	930.0	1475.0	1905.0	1260.0	1450.0	215.0	9795.0	160	23.6		
La Blanca	Ocós	"	12	0.0	0.0	0.0	33.0	135.8	162.0	45.0	193.0	255.0	-----	-----	-----	823.8	75	27.7		
Armenia	S.Rafael Pié de L.C.	Julia M. de Rehbach	1220	0.0	0.0	195.0	80.0	699.0	665.0	360.0	416.0	580.0	535.0	145.0	-----	3675.0	145	20.1	26.0	14.0
El Porvenir	San Pablo	Nacional	1013	14.5	3.0	106.0	70.0	795.0	548.0	414.7	621.0	569.9	678.1	-----	218.9	4039.1	171	21.3		
Santa Teresa	"	Escolástico Ortega	914	180.0	0.5	257.0	91.5	1206.3	1115.0	540.5	839.5	616.8	845.0	406.9	327.5	6426.5	214	21.9	30.0	14.0
Alabama Grande	Tumbador	-----	1010	-----	-----	-----	-----	-----	-----	-----	451.8	809.3	749.6	232.8	76.1	2319.6	104	21.3		
Bola de Oro	"	Nacional	924	2.0	1.0	190.0	42.0	478.0	727.0	436.0	426.0	576.0	671.0	208.0	85.0	3842.0	177	21.8		
El Escobillo	"	Zoila B. Haechmeister	610	40.0	7.0	192.0	67.0	482.5	566.0	558.5	635.0	574.0	799.0	314.0	95.5	4330.5	195	23.8	35.0	20.0
El Perú	"	Nacional	1334	5.0	2.0	292.0	52.0	578.0	741.0	443.0	466.0	564.0	695.0	147.0	92.0	4077.0	211	19.5		
El Rosario	"	Carlota v. de Buhl	790	6.0	1.0	301.0	37.0	470.0	565.0	643.0	421.0	618.0	735.0	211.0	92.0	4100.0	194	22.6		
SANTA ROSA																				
Cerro Redondo	Barberena	Nacional	1220	12.0	0.0	5.7	29.0	159.0	341.0	227.5	247.5	496.0	275.0	50.0	-----	1842.7	138	20.1	32.0	12.0
Las Viñas	"	"	1071	0.0	0.0	56.4	25.0	151.8	185.8	164.6	276.8	396.4	243.4	32.0	56.0	1588.2	137	21.0	34.0	8.0
San Bernardo	Chiquimulilla	Cía. Holandesa	457	0.0	0.0	0.0	0.0	510.5	331.5	263.5	401.5	708.0	686.5	19.0	0.0	2920.5	105	24.7		
El Amatillo	Oratorio	Carlos Welfers E.	700	0.0	0.0	11.0	0.0	137.0	234.0	284.0	249.0	509.0	237.0	34.0	0.0	1695.0	100	23.2	36.0	13.5
La Virgen	"	Enrique Engel	700	-----	-----	-----	-----	178.0	230.0	221.0	250.0	575.0	412.0	20.0	5.0	1891.0	62	23.2	33.0	16.0
SOLOLA																				
Monte de Oro	Atitlán	Cía. Holandesa	1100	19.0	0.0	165.0	28.0	478.0	578.0	768.0	497.0	854.0	799.0	90.0	185.0	4461.0	180	20.8		
Olas de Mocá	"	"	760	10.5	3.5	128.0	44.0	482.0	664.5	677.0	573.5	581.5	818.0	141.5	168.0	4292.0	184	22.8		
Pampojilá	San Lucas Tolimán	Eduardo Díaz	1524	0.0	0.0	44.0	12.5	182.2	385.5	275.0	422.0	358.5	323.5	16.0	0.0	2019.2	106	18.4	24.2	10.2
Santa Cruz Quixayá	"	Felipe de J. Quintana	885	6.9	0.0	71.6	19.1	223.3	557.3	521.2	371.6	485.1	399.5	23.9	47.5	2727.0	140	22.0	27.0	13.0
Santo Tomás Perdido	"	Cía. Holandesa	1280	0.0	2.0	82.0	6.0	238.0	359.0	388.0	282.0	283.0	160.0	0.5	0.6	1801.1	113	19.8	33.0	12.0
SUCHITEPEQUEZ																				
Mazatenango	Mazatenango	Ferrocarriles de C.A.	350	0.0	0.0	2.5	10.2	437.4	475.7	368.3	470.7	426.5	705.9	97.8	0.0	2995.0	114	25.4		
La Abundancia	Chicacao	Herederos Suhr	700	0.0	0.0	155.0	75.0	597.0	717.0	748.5	544.0	846.0	908.0	329.0	66.0	4995.5	156	23.2		
Chinán	"	Nacional	550	0.0	0.0	100.0	53.0	373.2	443.0	475.5	407.3	348.2	678.8	148.9	100.3	3128.2	178	24.2		
Los Castaños	"	"	840	11.0	8.0	156.0	87.0	569.0	696.0	619.0	711.0	754.0	736.0	192.0	126.0	4665.0	170	22.3		
Nahualate	"	Ferrocarriles de C.A.	150	9.4	0.0	87.6	26.7	469.1	627.4	553.2	590.1	483.6	623.1	23.6	27.9	3521.7	138	26.7		
El Naranjo	"	Exp. Plantations Inc.	1173	10.4	5.6	136.9	76.5	540.8	672.9	547.9	542.5	761.2	683.5	129.8	97.5	4205.5	207	20.4	31.1	13.9
El Naranjito	"	"	731	2.5	3.5	130.3	93.0	605.8	606.8	704.3	653.1	731.5	892.6	285.2	126.8	4835.4	211	23.0		
Patulul	Patulul	Ferrocarriles de C.A.	220	0.0	0.0	24.1	83.1	459.2	612.1	664.2	545.6	292.1	787.4	168.9	33.8	3670.5	131	26.2		
San Juan Luisiana	"	Juan Van Vollenhoven	520	25.0	4.0	44.0	75.0	565.0	593.0	811.0	766.0	837.0	1034.0	280.0	122.0	5156.0	140	24.2	33.0	14.0
Los Tarrales	"	Joseph Deleney Burge	822	8.9	0.0	82.0	3.8	240.3	556.3	516.6	322.3	481.3	413.0	36.1	39.6	2700.2	138	22.4	30.0	16.7
Palo Gordo	San Antonio Such.	Ferrocarriles de C.A.	260	0.0	178.8	76.2	26.7	582.9	444.5	463.5	493.8	443.2	759.0	16.0	40.6	3525.2	133	26.0		
Río Bravo	"	"	140	0.0	0.0	20.3	22.9	330.7	326.4	403.9	262.1	358.1	823.0	85.1	11.4	2643.9	99	26.7		
Chocolá	San Pablo Jocopilas	Nacional	880	0.0	20.0	136.0	47.0	634.0	860.0	570.5	483.0	647.0	829.0	313.5	60.0	4600.0	168	21.2		
La Paz	San Francisco Zap.	Cía. Holandesa	760	0.0	0.0	41.0	18.0	588.0	667.0	419.0	369.0	499.0	445.0	105.0	44.0	3195.0	138	22.8		
Santa Cecilia	"	Nacional	810	0.0	0.0	97.0	10.0	606.0	1021.0	513.0	896.0	1194.0	899.0	254.0	133.0	5623.0	188	22.5		
Guatalón	Santa Bárbara	Ferrocarriles de C.A.	130	6.4	0.0	60.7	22.4	384.3	234.4	473.5	410.0	422.9	724.2	101.4	2.5	2842.7	116	26.8		
Mocá	"	Lind & Co.	910	41.7	4.1	135.1	68.1	533.7	669.6	593.1	495.3	649.2	933.4	117.6	136.1	4377.0	191.	21.9	30.0	7.8
Palmeras	"	"	305	23.4	0.0	93.0	7.9	526.3	399.5	523.5	705.9	637.3	859.3	220.2	19.3	4015.6	174	25.7		
San Francisco Miramar	"	Angela A. v. de Ruiz	1066	7.2	0.0	124.3	28.4	312.6	418.5	379.8	318.6	346.0	482.6	55.4	94.9	2568.3	175	21.0	28.0	18.0
ZACAPA																				
Zacapa	Zacapa	Ferrocarriles de C.A.	180	0.0	0.0	0.0	0.0	40.6	116.8	41.9	31.8	182.1	33.0	1.3	0.0	447.5	34	26.4		

----- datos no obtenidos.
Temperaturas medias no definitivas mientras se calculan los valores normales.

Br. Claudio Urrutia E.
Director

SECRETARIA DE AGRICULTURA — OBSERVATORIO NACIONAL — GUATEMALA, C. A.

OBSERVATORIO NACIONAL

CUADRO PLUVIOMETRICO COMPARATIVO DE LOS ULTIMOS CINCO AÑOS
en milímetros

Estación	Municipio	Alt.mts.	1941	1942	1943	1944	1945
ALTA VERAPAZ							
Samac	Cobán	1280	2479.5	4405.5	3523.6	2305.5	2663.1
Mocca	Panzós	1040	------	------	2833.5	3459.0	3598.0
Tinajas	"	60	2682.4	3064.4	2515.1	1561.5	2238.5
Mayagué	Senahú	300	3465.0	3111.0	2817.0	2583.0	2857.0
San Juan	"	680	------	------	------	2685.0	3356.5
Sepacuité	"	980	4882.9	4705.5	4386.6	3385.1	3525.0
Los Alpes	Tucurú	655	4138.5	2667.0	3430.0	1906.1	3515.0
Bella Vista	"	1220	------	------	------	------	3485.0
Guaxac	"	1402	------	------	------	------	2385.0
BAJA VERAPAZ							
Westfalia	Purulhá	838	2362.8	2603.5	2900.6	2024.4	2175.5
Jalauté	"	792	2324.0	2723.2	2208.0	1951.0	2343.5
Monte Blanco	"	914	2811.5	------	------	2022.0	2493.0
CHIMALTENANGO							
Las Delicias	Acatenango	1280	2935.0	3120.0	3685.0	2515.0	3040.0
Santa Margerita	"	2000	2481.0	2744.0	2365.0	------	2628.0
El Potosí	Pochuta	550	2982.0	3344.5	3236.5	2937.5	3469.0
El Retiro	"	933	------	------	------	------	2116.0*
La Ceiba	Yepocaps	520	3370.5	4027.0	------	3374.5	3832.0
Morelia	"	970	3676.0	4464.0	5824.0	4196.0	5392.0
Santa Sofía	"	790	3090.0	4483.0	4035.0	2820.0	2740.0
Buena Vista Panajabal	"	1040	------	------	3960.0	2274.0	3414.0
San Rafael Sumatán	"	820	------	------	------	2993.5	3807.5
CHIQUIMULA							
Chiquimula	Chiquimula	380	461.7	842.6	652.8	575.9	420.6
Anguiatú	Concepción	500	1002.7	1438.1	1205.1	1187.0	1170.6
Agua Blanca	Ipala	890	738.5	1134.3	874.5	935.0	621.1
Ipala	"	820	898.5	1083.4	864.6	820.7	510.0
ESCUINTLA							
Escuintla	Escuintla	340	2133.2	3181.2	2979.8	2398.9	2664.0
Escuintla	"	366	------	------	------	------	3350.3
El Salto	"	396	------	------	------	------	3788.1
San Luis	"	488	------	------	------	------	3312.7
Concepción	"	440	2728.2	2953.4	2897.0	2954.5	3059.5*
San Andrés Osuna	"	820	3892.0	4749.0	4883.0	4252.0	5151.5
Obispo	La Democracia	210	2293.4	3895.0	2533.8	2372.0	2717.5
Obero	Masagua	30	1056.6	1736.5	1280.4	1755.9	965.7
Santa María	"	130	2101.3	2052.9	1501.4	2132.9	2650.6
Palín	Palín	1130	1608.9	1437.2	1202.5	1699.5	1705.7
Palín	"	1006	------	------	------	------	2281.8
Buena Vista	Santa Lucía Cotz.	210	2763.6	3360.4	3759.4	2932.7	4100.5
Santa Lucía	"	340	2596.0	3891.2	3561.5	2558.7	3651.2
San José Buena Vista	"	340	3243.5	3867.5	4039.0	3103.0	3990.7
San José	Pto. San José	0	1239.2	1988.5	1411.6	1155.2	1664.4
GUATEMALA							
Observatorio Nacional	Guatemala	1494	1063.1	960.4	1283.8	1114.7	1311.7
Facultad de CC NN	"	1487	791.4	1213.6	1157.0	905.4	1004.8
Guatemala	"	1497	1102.7	1036.0	1070.8	1008.9	1022.5
Guatemala	"	1494	------	------	------	------	1482.3
El Zapote	"	1372	------	------	------	------	1128.7
Amatitlán	Amatitlán	1158	------	------	------	------	1007.4
Piscal	Palencia	1120	1029.7	954.8	1080.1	1088.3	780.2
Korán	Villa Canales	1220	1256.1	1164.6	1189.8	967.5	1282.7
Villa Canales	"	1220	------	------	------	------	1154.7
Villa Nueva	Villa Nueva	1311	------	------	------	------	1089.5
HUEHUETENANGO							
Maxbal	Barillas	1463	------	6063.0	4598.8	4629.7	1769.7*
San Isidro	"	1463	------	------	------	------	5200.0
IZABAL							
Barrios	Pto. Barrios	0	3662.5	3474.5	2118.6	2875.8	3763.5
Quiriguá	Los Amates	70	1074.4	2161.5	1884.8	1692.2	2120.7
Tenedores	"	30	1593.3	2341.4	2024.5	1504.0	1397.3
Creek	"	55	2268.9	3503.0	2960.5	2478.7	2992.4
Quiriguá	"	69	2553.8	2936.7	2548.0	1899.2	2256.8
Pawnee	Morales	21	1995.4	2867.7	2791.2	1752.7	2395.0
PROGRESO							
Sanarate	Sanarate	810	640.6	735.3	696.0	778.3	629.3
El Rancho	S.Agustín Acas.	270	473.8	648.5	551.0	512.6	693.4
QUETZALTENANGO							
Observatorio Occidente	Quetzaltenango	2380	------	------	------	------	2544.3
Santa Bárbara	La Victoria	2395	------	------	913.0	1133.0	1124.0
Coatepeque	Coatepeque	490	3548.1	3644.3	3172.1	2615.0	3582.5
Monte Grandre	"	340	3595.0	3633.3	3616.2	2879.6	3554.8
Acultzingo	Colomba	1371	4063.0	3655.1	3258.4	3562.1	3459.6
La Esmeralda	"	950	3801.0	4202.0	3931.5	5622.5	6191.0
La Moka	"	1066	2771.0	2675.0	2901.5	3604.0	3557.8
Las Mercedes	"	975	3378.0	4799.0	4013.0	4115.0	3728.0*
La Mina	"	1220	3312.7	3393.4	2709.5	3180.0	2968.6
La Viña	"	1371	2078.5	2183.5	1823.0	1496.6	2181.4
Vizcaya	"	980	------	------	------	------	3846.9
Beliz - Helvetia	El Palmar	900	3823.2	4684.5	4808.0	4498.5	4212.5
El Nil "	"	1371	------	------	------	------	3312.4
La Suiza	"	1066	------	------	------	------	4141.3
Patzulín	"	900	3914.7	4680.9	4776.7	4129.1	4575.8
Candelaria	Flores C.C.	610	3963.0	4722.5	3834.0	3716.0	4083.0
QUICHE							
Chichicastenango	Chichicastenango	2100	------	------	------	------	1302.0*
RETALHULEU							
Subestación	Retalhuleu	240	------	------	------	------	2172.9
Dolores	Asintal	670	3377.8	4400.9	3970.6	4010.0	3923.8
Champerico	Pto.Champerico	0	964.5	1485.0	1041.1	1174.3	989.2
Muluá	Muluá	340	3331.8	4341.3	3768.9	3422.6	3666.6
San Felipe	San Felipe	690	4917.3	7022.7	8377.4	4858.5	4359.8
La Aurora	"	760	3624.5	5177.9	4725.4	4584.7	3892.5
El Carmen	S.Andrés V.S.	520	3502.0	5174.0	3807.0	4871.0	6130.0
Liria	Nuevo San Carlos	760	3527.5	4311.0	3738.3	3874.0	3936.8
Candelaria Xolhuits	"	760	3941.0	4968.2	4221.0	4272.8	4103.0
El Salvador	"	1066	4075.1	4687.8	4752.9	4368.8	4307.6
La Primavera	San Martín Zap.	520	3679.1	5021.4	4156.8	4029.0	3563.0
San Sebastián	San Sebastián	335	------	------	------	------	3294.4
Buena Vista	"	500	------	------	------	------	3422.9
SACATEPEQUEZ							
Antigua	Antigua	1524	------	------	------	------	980.3
Retana	"	1554	751.4	698.2	851.3	708.1	928.6
El Potrero	Ciudad Viejo	1524	1082.1	1060.2	1143.1	1211.4	1121.8
La Reunión	Alotenango	1432	2927.5	2825.5	2473.0	3319.0	3524.0
Florencia	S.Lucía M.A.	1980	------	------	------	------	1309.5
SAN MARCOS							
Ayutla	Ayutla	40	1264.9	1441.0	1744.5	991.1	1156.2
El Pensamiento	El Rodeo	700	3033.2	4570.2	3346.2	3145.1	3900.0
Concepción Candelaria	La Reforma	730	4088.1	------	------	4592.0	3324.5*
La Igualdad	"	1371	------	------	------	------	4834.0
La Paz	"	1220	3657.0	3907.0	3707.0	3894.0	3405.0
Montelimar	Malacatán	820	4948.0	6143.5	5107.0	4850.0	2681.0*
Mundo Nuevo	"	820	4616.0	6232.0	7638.0	5571.0	8019.8
San Ignacio	"	730	------	------	------	------	4520.0
Sonora	"	350	------	------	------	------	4900.0
San Luis	"	640	4512.0	8604.0	4062.0	5191.0	9795.0
La Blanca	Ocós	12	------	------	------	------	823.8*
Armenia	S.Ref.P.de L.C.	1220	3450.0	4242.0	3316.0	3603.0	3675.0*
El Porvenir	San Pablo	1013	3773.0	5204.5	5152.0	4499.5	4039.1*
Santa Teresa	"	914	4412.4	5164.8	5477.5	5406.6	6426.5
Alabama Grande	Tumbador	1010	------	------	------	------	2319.6*
Bola de Oro	"	924	3893.0	4853.0	4197.0	3398.0	3842.0
Escobillo	"	610	3742.5	4826.2	3824.0	3738.0	4330.5
El Perú	"	1334	4246.0	4938.0	4796.0	3199.6	4077.0
El Rosario	"	790	3986.7	4520.3	4385.0	4088.0	4100.0
SANTA ROSA							
Cerro Redondo	Barberena	1220	2056.8	1948.0	2001.0	1575.1	1842.7*
Las Viñas	"	1071	1782.0	1666.3	1981.9	1580.3	1588.2
San Bernardo	Chiquimulilla	457	2033.0	3101.5	2165.5	2243.0	2920.5
El Amatillo	Oratorio	700	1410.0	1546.0	1643.0	1319.0	1695.0
La Virgen	"	700	------	------	------	------	1891.0*
SOLOLA							
Monte de Oro	Atitlán	1100	4196.0	4558.0	3818.5	4418.0	4461.0
Olas de Mocá	"	760	4311.0	5116.0	5029.0	4272.5	4292.0
Pampojilá	S.Lucas Tol.	1524	1767.1	2386.6	1817.7	1908.4	2019.2
Santa Cruz Quixayá	"	885	------	------	------	------	2727.0
Santo Tomás Perdido	"	1280	------	------	------	------	1801.1
SUCHITEPEQUEZ							
Mazatenango	Mazatenango	350	2672.1	4071.5	3306.7	3142.5	2995.0
La Abundancia	Chicacao	700	4773.0	5716.5	5503.0	5605.0	4995.5
Chinán	"	550	3660.0	4301.3	4123.5	3167.0	3128.2
Los Castaños	"	840	5147.5	5857.0	4590.0	5136.0	4665.0
Nahualate	"	150	3579.2	3662.7	3494.5	3320.0	3521.7
El Naranjo	"	1173	4252.3	5465.9	4406.6	4111.9	4205.5
El Naranjito	"	731	------	------	4765.5	4719.3	4835.4
Patulul	Patulul	220	3019.8	3483.4	3362.4	2807.0	3670.5
San Juan Luisiana	"	620	2634.0	3645.0	3801.0	3754.0	5156.0
Los Tarrales	"	822	2982.2	3148.5	2528.9	2004.3	2700.2
Palo Gordo	S.Antonio Such	260	3497.4	4260.1	3817.8	3981.3	3525.2
Río Bravo	"	140	2599.8	3112.2	3066.6	2686.4	2643.9
Chocolá	S.Pablo Jocopilas	880	4001.7	4640.5	4689.0	3845.1	4600.0
La Paz	S.Francisco Zap.	760	2927.0	3434.0	3779.0	3139.0	3195.0
Santa Cecilia	"	810	3721.0	4842.5	4590.0	4756.0	5623.0
Guatalón	Santa Bárbara	130	3106.4	4039.8	3477.5	3199.5	2842.7
Mocá	"	910	4031.4	5081.9	4906.9	3979.5	4377.0
Palmeras	"	305	------	------	------	------	4015.6
San Francisco Miramar	"	1066	2570.0	2911.0	2667.0	2655.0	2568.3
ZACAPA							
Zacapa	Zacapa	180	522.7	845.4	606.8	576.1	447.5

---- datos no obtenidos
* total no completo por faltar reportes.

Br. Claudio Urrutia E.
Director

SECRETARIA DE AGRICULTURA
OBSERVATORIO NACIONAL
GUATEMALA, C. A.