JAHRBUCH

DES

NORWEGISCHEN METEOROLOGISCHEN INSTITUTS

FÜR

1925.

QC
989
.N8
A6
1925

Herausgegeben

von

Dem Norwegischen Meteorologischen Institut.

LIBRARY
OCT 8 - 1926
46382
WEATHER BUREAU

Oslo.

Druck bei Gröndahl & Sön.

1926.

LIBRARY
APR 2000
National Oceanic &
Atmospheric Administration
U.S. Dept. of Commerce

National Oceanic and Atmospheric Administration

Environmental Data Rescue Program

ERRATA NOTICE

One or more conditions of the original document may affect the quality of the image, such as:

Discolored pages
Faded or light ink
Binding intrudes into the text

This document has been imaged through the NOAA Environmental Data Rescue Program. To view the original document, please contact the NOAA Central Library in Silver Spring, MD at (301) 713-2607 x124 or www.reference@nodc.noaa.gov.

Information Manufacturing Corporation
Imaging Subcontractor
Rocket Center, West Virginia
September 14, 1999

Inhalt.

Vorwort.

Verzeichnis der Stationen.

I. Stündliche Luftdruck- und Temperaturregistrierungen in Oslo (Kristiania), die des Niederschlags und des luftelektrischen Potentialgefälles in Aas 1925.

II. Termin-Beobachtungen an zehn Stationen in Norwegen 1925.

III. Monats- und Jahres-Resumé für das Jahr 1925.

IV. Anhang I. Abweichungen der Monatsmittel 1925 vom Normalwert.

V. Anhang II. See-Temperatur 1925.

VI. Anhang III. Beobachtungen auf Spitzbergen in Green Harbour, Eisfjord, Juli 1924—Juni 1925.

Monats- und Jahres-Resumé 1924.

Beobachtungen auf Jan Mayen Juli 1924—Juni 1925.

Monats- und Jahres-Resumé 1924.

VII. Anhang IV. Beobachtungen auf Haldde 1925.

Druckfehler und Verbesserungen.

Im Jahrbuch für: Lies

1884: Druckfehler 1884 S 14. Sandøsund: April 14 2p . . . . . April 27 2p
1885: — 1885 » 21. Mandal: Mai 11 2p 8a
— — » 39. Florø: Mai 29 27
1906: (und 1907 Druckfehler)
S. 108. Trondhjem Sept. Luft-Temp. Max. 29.0 . . . . . 19.0
1907: » 93. Granheim Jahr. Niederschl. Summe: 574.2 . . . . . 573.9
— — Zahl d. Tage mit Niederschl.: 196 195
1908: » 90. Kongens Grube. Luft-Temp. Mittel Jahr: —0.3 . . . . . —0.4
1909: Druckfehler 1909. S. 8. Kristiania Luftdr. Decbr. M. 7p: 50.23 . . . . . 51.23
1912—1921: Verzeichnis d. Stationen u. Resumé: Mehavn H_b = 6.4 . . . . . 7.4
1913: S. 90. Kongens Grube. Luft-Temp. Mittel Jahr: —0.1 . . . . . 0.0
1914: » 96. Kristiania. Luft-Temp. Mittel Februar: 0.9 . . . . . 0.8
1915: » 90. Røros Luft-Temp. II. Jahr: 1.4 (1916 berichtiget: 1.5) 0.6
1917: Druchfehler: 1911. S 118. Ona See-Temp. Mittel Jahr 9.7: lies: Mittel Juni 9.7 . . . . . 10.0
1919: S. 11. Kristiania Luft-Temp.

	4p	5p	6p	7p	8p	9p	10p	11p	MN	Mittel
Aug. 31:	14.9	14.0	13.7	12.8	12.0	11.2	11.1			12.15
M:	17.79		16.74	15.42	14.42	13.46				14.04
lies: Aug. 31:	14.8	13.8	13.3	12.3	11.4	10.9	10 9			12.05
M:	17.78		16.72	15.40	14.40	13.45				14.03

» 12. Kristiania Luft-Temp.

	1a	2a	3a	4a	5a	6a	Mittel
Sept. 1:	10.4	10.4	10.2	9.8	9.8	**9.2**	13.21
M:	10.27	10.04		9.53	9.33	**9.23**	
lies: Sept. 1:	10.1	10 1	10.0	9.6	9.7	**9.1**	13.16
M:	10.26	10.03		9.52	9.32	**9.22**	

» 124. Kristiania Luft-Temp. Mittel: Nvb.: —2.8, Jahr: 5.4 . . . . . Nvb.: —2.3, Jahr: 5.5
» 153. Abweich. v. Norm. Luft-Temp. Kristiania: Nvb.: —2.9, Jahr: —0.1 . Nvb.: —2.4, Jahr: 0.0
1920: » 66—68. Mandal. Beobacht. stunde Juli—Decbr. 8—2—8 . . . . . 8—2—7
» 72—74. Skudenes — — » » 8—2—8 . . . . . 8—2—7
» 143. Skomvær. Windverteilung. Jahr: S. 129, C 74 . . . . . S. 119, C 84
1921: » 56. Kristiania. Luft-Temp. Min.: Decb. 12: —2.9, M.: —4.0 . . . . . Decb. 12: 1.8, M: —3.8
» 120. Granheim. Luft-Temp. Mittel: März April Mai Juni Okt. Jahr

	März	April	Mai	Juni	Okt.	Jahr
	—0.1	4.7	7.6	10.2	4.8	2.7
lies:	0.1	5.2	8.3	10.7	5.0	2.9

» 124. Kristiania. Luft-Temp. Min. Decb.: —4.0 . . . . . —3.8
» 138. Runde. Luft-Temp. Mittel Juli: 11.5 . . . . . 11.4
1922: » 104. Granheim. Luft-Temp. Mittel:

	Jan.	Febr.	März	April	Mai	Juni	Okt.	Jahr
	—12.2	—12.7	—4.1	—1.0	6.2	10.6	0.9	1.1
lies:	—12.1	—12.6	—3.8	—0.5	6.7	11.1	1.1	1.3

» 142. Sandstad. Luft-Temp. Jan. II: 1.1, Mittel: —1.1, Jahr II: 7.3, Mittel: 5.7,
lies: —1.1, —1.8, 7.1, 5.6
1922—25: Verzeichnis d. Stationen und Resumé. Svandalsflona: H = 1081 . . . . . H = 10.66
1923—25: Verzeichnis d. Stationen und Resume: Mehavn H_b = 8.2 . . . . . H_b = 10.2
1923: S. 73. Trondhjem. Luft-druck M. 8—2—7: Sept.: 00.6, 01.0, 00.9, Okt.: 90.9, 90.8, 90.8
lies: 00.5, 00.8, 00.8, 90.7, 90.6, 90.6
» 74. — — —»— Nvb.: 95.5, 95.5, 95.6, Decb.: 01.2, 01.5, 02.3
lies: 95.4, 95.4, 95.5, 01.0, 01.4, 02.2
Sämtliche Luftdr.obs. vom 5 Sept. 2p an sind mit ungefehr —0.2 mb zu corrigiren.
» 114. Aas. Luft-Temp. Novb. II: 2.0, Mittel: —1.2 . . . . . II: 0.2, Mittel: —1.7
— Jahr II: 7.3 . . . . . 7.2
» 144. Trondhjem. Luftdr. Mittel: Sept.: 00.8, Okt.: 90.8, Novb.: 95.5, Decb. 01.7
lies: 00.7, 90.6, 95.4, 01.5
1924: Druckfehler 1891: S. 82. Dalen. Temp. Decb. Mittel: —3.5 lies: 2.7 . . . . . —2.7
1924—25: In Verzeichnis d. Stationen u. Resumé: Ona . . . . . H = 12, h_b = 3.7, h_r = 1.2
1924: S. XII. 133. Trondhjem: H_b = 39.5 u. S. 57—62: H_b = 38.0 . . . . . H_b = 37.0
» 108. Eg. Temp. Mittel:

	Febr.	März	April	Mai	Juni	Juli	Aug.	Sept.	Okt.	Novb.	Jahr
	—1.5	—1.7	2.7	8.3	13.1	14.9	14.9	12.1	8.4	5.3	6.7
lies:	—1.6	—2.0	2.5	8.1	13.0	14.6	14.7	11.9	8.3	5.2	6.5

Relativ Feucht. Mittel: Apr. 76, Jahr. 83 . . . . . Apr. 77, Jahr 84
» 114. Skudenes. Luft-Temp. Juli III: 14.3, Jahr III: 8.0 . . . . . Juli III: 14.1, Jahr III: 7.9
— Abs. Feucht. Juli III: 9.6, Juli Mittel: 9.5 . . . . Juli III: 9.7, Juli Mittel: 9.6
— Relat. Feuch. Juli III: 79, Juli Mittel: 82 . . . . . Juli III: 81, Juli Mittel: 83
» 124. Lærdal. Aug. I: Abs. Feucht. 9.8, Relat. Feucht. 84 . . Abs. Feucht. 9.7, Relat. Feucht. 83
» 146. Frihetsli. Luft-Temp. Juli II: 19.7, Mittel: 15 3, Max.: 37.7, Dat.: 21
lies: — 19.4, — 15.2, — 28.4, — 27
Luft-Temp Jahr. Max.: 37.7 . . . . . 28.4
» 148. Ingøy. Luft-Temp. Sept. Min.: 5.1, Mittel: 7.7, beob. Min.: 1.2, Dat.: 29
lies: — 6.3, — 7.9, — 3.0, — 8
Luft-Temp. Jahr. Min. 0.4 . . . . . 0.6
» 154. Abweich. Luft-Temp. Bodø:

	Jan.	Febr.	März	April	Mai	Juni	Juli	Aug.	Sept.	Okt.	Novb.	Decb.	Jahr
	+0.5	—2.1	—2.9	—1.4	—0.6	—1.5	+2.6	+2.3	+0.3	+2.2	+0.7	+2.3	+0.2
lies:	+1.8	—0.7	—1.4	0.0	+0.4	—1.0	+2.8	+2.8	+1.5	+3.7	+2.0	+3.5	+1.3

1925: S. 56. Aalesund. Luftdruck Decb. 25: 2p: 89.7, 7p: 89.7 . . . . . 2p: 84.7, 7p: 84.7
— — M: 2p: 98.0, 7p: 98.1 . . . . . 2p: 97.9, 7p: 97.9
» 61. Trondhjem. Luftdruck Sept. 29: 8a: 10.0, M. 8a: 01.0 . . . Sept. 29. 8a: 00.0, M. 8a: 00.6
» 120. Slirå. $\lambda = 7^0\,23'$, $E = 29^m\,31^s$, $\varphi = 60^0\,37'$ N . . . . . $\lambda = 7^0\,25'$, $E = 29^m\,31^s$, $\varphi = 60^0\,35'$ N.

Vorwort.

Das Jahrbuch für 1925 enthält stündliche Werte des Luftdrucks und der Temperatur in Oslo (Kristiania,) diejenigen des Niederschlags und des luftelektrischen Potentialgefälles in Aas, die Terminbeobachtungen für 10 Stationen, die Uebersichtstabellen für 136 Stationen und vier Anhänge. Im ersten von den Anhängen finden sich die Abweichungen des Luftdrucks und der Temperatur von den normalen Werten für einige älteren Stationen, im zweiten die Monatsmittel der Seetemperatur für einige Küstenstationen, im dritten stündliche Werte der Temperatur und Terminbeobachtungen mit Uebersichtstabellen für Green Harbour in Spitzbergen und Terminbeobachtungen mit Uebersichtstabellen für Jan Mayen, im vierten stündliche Werte des Luftdrucks und der Temperatur nebst Terminbeobachtungen für Haldde.

Von den 138 Stationen haben 62 Quecksilberbarometer, 102 Psykrometer oder Haarhygrometer und 36 nur trockenes Thermometer. Sämtliche Stationen haben Minimumsthermometer, während nur Oslo (Kristiania,) Bergen, Trondhjem, Tromsø (Geof. Inst.) und Haldde mit Maximumsthermometer versehen sind. Die Thermometer sind in kleinen Gehäusen am Fenster aufgestellt. Hütten sind nur an Stationen mit Thermographen im Gebrauch.

Die Quecksilberbarometer sind Stationsbarometer hauptsächlich englischen Fabrikates. Ungefähr drei Viertel der Stationen haben neue Barometer mit Millibarteilung erhalten. Die Thermometer sind Küchlerthermometer mit Papierskala und 1/5° C Einteilung, für Minimumsthermometer 1/1° C. Bei den Psykrometerbeobachtungen wird Aspirator nicht verwendet. Die Haarhygrometer, die bei uns verwendet werden, sind hauptsächlich die Russeltvedt'schen Torsionshygrometer [1]). Die meisten Stationen im nördlichen Teile des Landes haben doch Devik'sche Hygrometre [2]).

Ungefähr 50 Stationen sind mit Barograph, 20 mit Thermograph und 6 mit Hygrograph versehen. Von den Registrierungen dieser Instrumente sind die Barogrammen in Oslo (Kristiania) und Haldde, die Thermogrammen in Oslo (Kristiania,) Aas, Bergen, Rundemanden, Trondhjem, Lærdal, Rena, Spitzbergen, Jan Mayen und Haldde, die Hygrogrammen in Aas, Bergen und Lærdal zur Ermittelung der stündlichen Werte benutzt.

In diesem Jahrbuch befinden sich dieselben Stationen wie im vorhergehenden mit Ausnahme von Hønefòs, Aal, Finse, Stryn und Sørgjæslingerne die herausgegangen sind, während Fokstua, Aabjørsbraaten, Byglandsfjord, Slirå, Nordfjordeid, Hellesylt, Snaasa, Lødingen und Sand i Senjen zugekommen sind.

In Bezug auf die einzelnen Stationen ist zu erwähnen:

Aabjørsbraaten. Neue Station in Valdres auf der südlichen Seite des Thales in 671 m. Meereshöhe.

Aal. Die Station wurde am Ende des Jahres 1924 aufgehoben.

Andenes. Die Feuchtigkeits-Beobachtungen misslungen.

---

[1]) Met. Zeitschrift 1908 S. 396–400.

[2]) Das Prinzip des Instrumentes beruht darauf, dass die Länge des Haares durch eine Mikrometerschraube gemessen wird. Keine Beschreibung veröffentlicht.

Byglandsfjord. Die Station, die früher im Dorfe auf der östlichen Seite des Flusses gelegen war, wurde im Jahre 1924 nach dem Hofe Guldsmedmoen, wo sich eine Niederschlagsstation befunden hatte, auf der westlichen Seite des Flusses verlegt.

Finse. Die Beobachtungen sind nie befriedigend gewesen und sind dafür am Ende des Februars aufgehoben, indem eine neue Station Slirå, 6 km. in westlicher Richtung entfernt, in Wirksamkeit getreten war.

Fleinvær. Die Feuchtigkeits-Beobachtungen misslungen.

Fokstua. Neue Station auf Dovrefjeld im Lokal des Bahnhofes, 952 m. über dem Meere. Die Station liegt in einem ebenen und ganz breiten Thal mit niedrigen Anhöhen im Westen und Osten.

Hellesylt. Neue Station am Geirangerfjord in Sunnmøre. Das Terrain steigt rasch gegen Süd.

Hellisø. Die Station hat Regenmesser erhalten.

Horten. Die Station ist von der Insel Vealøs in die Stadt, Jernbanegaten, verlegt.

Hønefos. Die Station ist am Ende des Jahres 1924 aufgehoben.

Kvassheim. Die Station ist am Ende des Jahres 1925 aufgehoben.

Lødingen. In östlichem Lofoten auf der grossen Insel Hindø, ca. 3 km. von dem Pfarrhofe entfernt, wo Beobachtungen in den Jahren 1873—1884 gemacht wurden.

Mehavn. Die Feuchtigkeits-Beobachtungen eingestellt. Bei der Inspection im August 1925 wurde gefunden, dass die Meereshöhe des Barometers in den früheren Jahren zu klein aufgegeben ist. In dem Jahrbüchern für 1912—1921 soll diese 7.4 statt 6.4 und in denjenigen für 1923 und 1924 10.2 statt 8.2 sein. Ob die im Jahrbuch für 1922 angegebene Höhe 4.6 auch um 2 m. zu niedrig sei, kann nicht entschieden wurden.

Nordfjordeid. Neue Station in Nordfjord. Freies Terrain.

Nordøerne. Die Station hat Barometer und Barograf erhalten. Der Regenmesser ist nach einer anderen Stelle näher an den Häusern verlegt.

Sand i Senjen. Neue Station auf der kleinen Insel Sandsø ca. 17 km. im NNE von der Stadt Harstad.

Slirå. Neue Station in einem Eisenbahnhäuschen, 6 km. westlich von Finse in 1300 m. Meereshöhe. Freies Terrain.

Snaasa. Die Station ist seit dem Juli 1924 wieder in Wirksamkeit.

Stenkjær. Die Station wurde von der Telegraphenstation nach der Forstschule ausserhalb der Stadt am 28. September 1925 verlegt. Die Forstschule hat ihren Sitz im Hofe Eggeli im Bezirke Egge. Der Abstand des Hofes von der Stadt ca. 1½ km. in nordwestlicher Richtung. Freies Terrain. Die Luftdruckswerte sind bis Ende des Jahres auf die vorige Meereshöhe reduziert.

Stryn. Die Station am Ende des Jahres 1924 aufgehoben.

Sørvaagen. Die Feuchtigkeits-Beobachtungen misslungen.

Vardø. Die Station wurde am 24. Oktober 1925 von der Telegraphenstation in der Stadt nach dem Hause des Stückjunkers im Terrain der Festung überführt. Die Luftdruckswerte sind bis Ende des Jahres auf die vorige Meereshöhe reduziert.

Vinstra. Die Station am Ende Des Jahres 1925 aufgahoben.

Auf Seite XI und XII sind die wichtigsten Erläuterungen über die Stationen tabellarisch gegeben. In der letzten Kolonne sind die Beobachtungsstunden angegeben, aus welchen zu sehen ist,

dass die gewöhnlichen Beobachtungstermine 8 a, 2 p und 7 p nach Mitteleuropäischer Zeit sind. Nur an ganz wenigen Stationen ist der Mittagstermin aus verschiedenen Gründen auf 1 p statt 2 p verlegt.

In diesem Jahrbuch ist das Luftdruck wie in dem vorhergehenden in Millibaren angegeben, während für die Dampfspannung Millimeter beibehalten ist.

Das Jahrbuch ist in drei Abteilungen geteilt.

Die erste Abteilung enthält die stündlichen Werte des Luftdrucks und der Temperatur in Oslo (Kristiania,) diejenigen des Niederschlags und des luftelektrischen Potentialgefälles in Aas.

Der Barograph in Oslo (Kristiania) ist seit dem 1. Januar 1922 im Lokal des Astronomischen Observatoriums aufgestellt. Seine Angaben für jede Stunde sind reduziert auf den Stand des auf 0^0, auf das Normalbarometer und die Normalschwere reduzierten Stationsbarometers, aber nicht auf das Meeresniveau. Die Meereshöhe des Stationsbarometers ist 24.9 Meter.

Der Thermograph in Oslo (Kristiania) steht in der Wild'schen Hütte im Park des astronomischen Observatoriums. Seine Angaben sind reduziert auf die auf das Luftthermometer reduzierten Ablesungen des Normalthermometers.

Der Niederschlag in Aas wird mit einem registrierenden Schneemesser, Süstem Hellmann, gemessen.

Die in diesem Jahrbuch angeführten Potentialregistrierungen sind durch die im Oktober 1918 aufgestellte neue Potential-Registrieranordnung erhalten.

Ausser den Stundenwerten des Luftelektrischen Potentialgefälles sind angegeben sowohl »Monatsmittel des luftelektrischen Potentialgefälles für jede Stunde« und »Täglicher Gang des luftelektrischen Potentialgefälles nach Abweichungen vom Monatsmittel« als »Monatsmittel der luftelektrischen Leitfähigkeit (für positive Elektricität) für jede Stunde» und »Täglicher Gang der luftelektrischen Leitfähigkeit nach Abweichungen vom Monatsmittel».

Für die Mittelberechnung sind (es gilt die beiden elektrischen Elemente) nur Normaltage verwendet, für welche die Zahlen fett gedruckt sind.

Die zweite Abteilung enthält die vollständigen Terminbeobachtungen an den 10 Stationen Dovre, Oslo (Kristiania,) Okso, Bergen, Aalesund, Trondhjem, Brønnø, Bodø, Alten und Vardø. Die Anzahl der Stationen in dieser Abteilung ist wie in dem vorhergehenden Jahrbuch von 12 bis auf 10 reduciert, da im dritten Anhang die Terminbeobachtungen von Green Harbour und Jan Mayen veröffentlicht sind. Interpolierte Werte sind mit Kursiv gedruckt. Die Tabellen haben folgende Daten:

1. Den Monatstag.

2. Den Luftdruck oder die Barometerhöhe auf 0^0 C, auf das Normalbarometer und auf die Normalschwere, aber nicht auf das Meeresniveau, reduziert[1]). Die Reduktion auf die Normalschwere geschiet nach der Formel.

$$C = \frac{g - g_{45}}{g_{45}} \; b = \frac{C_0}{b_0} b,$$

wo g die Schwerebeschleunigung an der Station, g_{45} die Normalschwere (9.80616 m.), b die Barometerhöhe, reduziert auf 0^0 und das Normalbarometer, C die Schwerekorrektion bei b, C_0 die Schwerekorrektion bei b_0 ist.

Auf jeder Druckseite sind zwei zusammengehörige Werte von C und b angegeben. C wird dort C_g genannt um anzugeben, dass es sich um die Schwerekorrektion handelt. Die

[1]) Wegen des Normal-Barometers siehe Jahrbuch für 1884 Vorwort, und auch Meteorologische Zeitschrift 1891, S. 252 sowie Klimatabeller for Norge. II. Lufttryk. Videnskabsselskabets Skrifter. I. Math. naturv. Klasse, 1896 No. 1. S. 1—15.

angegebene Barometerhöhe ist so gewählt, das die Schwerekorrektion für diese Höhe eben von einem Zehntel bis nächsten überspringt. Man sieht dann unmittelbar mit welcher Schwerekorrektion man zu rechnen hat und es ist auch ganz leicht die Zahlen des Jahrbuchs für den Luftdruck, durch einfache Subtraktion der angegebenen Schwerekorrektion, auf die unkorrigierte Barometerhöhe zurückzuführen.

Die beobachteten Maxima und Minima sind mit fetten Typen gedruckt.

3. Die Lufttemperatur nach Celsius. Die Ablesungen des Index des Minimumsthermometers sind durch tägliche Vergleichung desselben um 8 Uhr a. m. mit dem trocknen Thermometer korrigiert worden. Vom 1. Januar 1894 an wird das Minimumsthermometer um 8 Uhr a. m. eingestellt.

Die beobachteten Maxima und Minima sind mit fetten Typen gedruckt.

4. Den Dampfdruck in Millimetern aus den Psykrometerbeobachtungen nach Jelineks und für Kältegrade nach Birkelands Tabellen berechnet. Für die Haarhygrometer Stationen Dovre, Alten und Spitzbergen aus der relativen Feuchtigkeit und der Luft-Temperatur. Die beobachteten Maxima und Minima sind mit fetten Typen gedruckt.

5. Die relative Feuchtigkeit auf dieselbe Weise berechnet oder direkt nach den korrigierten Haarhygrometerbeobachtungen genommen. 00 = 100 %.

6. Die Windrichtung rechtweisend nach 16 Strich, in den englischen Bezeichnungen ausgedruckt.

Die Windstärke nach Schätzung; Skala 0 = Still bis 12 = Orkan[1]).

7. Die Bewölkung nach der Skala 0 = Heiter bis 10 = Überzogen. Niederschläge, die während eines der 3 festen Beobachtungstermine wahrgenommen worden sind, sind nach der Bewölkungszahl angeführt worden. • Regen; * Schnee; ⁑ Regen und Schnee; △ Graupeln; ≡ Nebel.

8. Die Höhe des Niederschlags in Millimetern am 8 Uhr mg. gemessen, angeführt für den Tag, an welchem er gemessen ist.

9. Bemerkungen über Niederschlag und andere Phänomene mit zugehöriger Tagezeit M. E. Z.

Die Bezeichnungen sind:

● Regen.	sch.	Schauer.		n	in der (vorhergehenden) Nacht
* Schnee.	tr.	Tropfen,		a	vormittags.
△ Graupeln.	fl.	Flocken.		p	nachmittags.
≡ Nebel.	körn.	körnig.		mg.	morgens.
⌒ Tau.	0	Schwach	Als Exponent	mtg.	mittags.
⌣ Reif.	2	Stark.	Als Exponent	abd.	abends.
↗ Starker Vind.				I	Erste Beobachtungsstunde.
⊼ Gewitter.				II	Zweite —
< Blitz ohne Donner.				III	Dritte —
⋔ Nordlicht.				u.	und.
⊕ Sonnenring.				st.	stark.
⦶ Sonnenhof.				sp.	später.
⦷ Mondring.				zeitw.	zeitweise.
⦸ Mondhof.					

[1]) Eine Vergleichung der geschätzten Windstärken mit gemessenen Windgeschwindigkeiten findet sich im Jahrbuche für 1874. Siehe auch Jahrbuch für 1875, Vorwort, Seite II, sowie Annalen der Hydrographie und Maritimen Meteorologie, 1889 S. 365—372, und Meteorologische Zeitschrift, 1890 S. 50—55.

Niederschlag oder andere Phänomene, die zwischen den festen Beobachtungszeiten beobachtet wurden, sind bezeichnet durch ein dem Zeichen des Phänomens nachgesetztes *n*, *a* oder *p*. Die Zeitangabe »früh« bezeichnet eine Zeit zwischen Mitternacht und 8 Uhr morgens, »spätabd«. zwischen 7 Uhr abends und Mitternacht. Wenn *a* und *p* nicht an einer Stundenzahl stehen, bezeichnen sie die resp. Zeiträume zwischen Morgen- und Nachmittagsbeobachtung und zwischen Nachmittags- und Abendbeobachtung. »abd.« ist eine unbestimmtere Zeitangabe, welche im Winter gewöhnlich eine frühere Zeit bezeichnet als im Sommer. »mtg.« umfasst die Stunden 12 bis 2.

Die dritte Abteilung enthält die Übersichtstabellen des Monats- und Jahresresumé in Mitteln und Summen. Die Tabellen haben dieselben Daten wie die der 2. Abteilung.

Luftdruck, auf 0°, das Normalbarometer und die Normalschwere reduziert, aber nicht auf das Meeresniveau. Die Zahlen sind das Mittel von den drei täglichen Beobachtungen.

Lufttemperatur. Von den Minimumstemperaturen gilt dasselbe wie oben von denen in der zweiten Abteilung gesagt. Die Monatsmittel sind berechnet nach der Formel [1])

$$m = n - k\,(n - \text{Min.})$$

wo n das einfache Mittel aus den drei fixen täglichen Beobachtungen und k ein Faktor ist, der mit der Station und dem Monate wechselt [2]).

Für Oslo (Kristiania,) Bergen (Met. Obs.), Trondhjem, Tromsø (Geof. Inst.) und Haldde sind die mittels Maximumsthermometers beobachteten absolut höchsten Temperaturen in jedem Monat mit zugehörigem Datum aufgeführt. Sonst sind es die auf die Beobachtungsstunden fallenden Maxima, welche angegeben worden sind.

Die Monatsmittel der absoluten Feuchtigkeit. Die Zahlen sind das einfache Mittel der drei Terminbeobachtungen plus eine Korrektion [3]). Diese die aus den stündlichen Beobachtungen in Oslo (Kristiania,) Bergen und Bossekop (Alten) berechnet worden sind, können mit dem Abendtermin um 7 p ungeändert gebraucht werden.

Die Terminmittel für Haarhygrometerstationen sind aus den Mitteln der relativen Feuchtigkeit und der Lufttemperatur berechnet mit einer empirisch bestimmten Korrektion, die nur von der Temperatur abhängt:

Temp.	Korr.
> 20°	— 0.2
15-20	— 0.1
10-15	0.0
0-10	+ 0.1
— 6- 0	+ 0.2
— 10- —6	+ 0.3
< — 10	+ 0.4

Die Monatsmittel der relativen Feuchtigkeit. Diese sind nach der Köppen'schen Formel:

$$m = q + c\,(2p - q),\quad q = \tfrac{1}{2}(\text{Morgenbeob.} + \text{Abendbeob.})$$

berechnet worden [4]).

---

[1]) Siehe Met. Zeitschr. 1891, S. 253 flg.; auch 1906, S. 540 flg.
[2]) Siehe Jahrbuch für 1920. S. IX.
[3]) Die Werte dieser Korrektion sind angegeben im Jahrbuch für 1891, S. XV.
[4]) Die Werte des Faktors c sind angegeben im Jahrbuch für 1920, S. XI.

Die Monatsmittel der Bewölkung sind die Mittel aus den drei täglichen Beobachtungen.

Der Niederschlag ist die Monatssumme.

Die Zahl der Tage mit Niederschlag u. s. w. Die drei ersten Rubriken geben die Zahl der Tage mit merkbarem Niederschlag, mit Niederschlag über oder gleich 0.1 mm. und mit über oder gleich 1.0 mm. Als Schneetage sind nur diejenigen gerechnet, an welchen eine messbare Menge gefallen ist. Tage, wo Schnee und Regen gemischt waren, sind als Schneetage gerechnet. Als Tage mit Nebel sind auch diejenigen gerechnet, wo schwache Nebel vorhanden war, aber Tage mit Bodennebel sind nicht mitgezählt. Heitere Tage sind solche, wo die Summe der Bewölkung für alle drei Beobachtungsstunden weniger als 6 beträgt. Trübe Tage sind solche, an denen die Summe grösser ist als 24. Als Gewittertage sind diejenigen gerechnet, an welchen Donner gehört wurde. Übrigens sind die Angaben der Gewitter bei den meisten Stationen ganz unvollständig. Sturmtage sind solche, an welchen die Windstärke über 8 notiert ist. Die Nordlichtbeobachtungen waren im Ganzen ziemlich unvollständig, so dass die in den Tabellen angegebene Zahl der Tage mit Nordlicht in der Regel bei weitem nicht die volle Anzahl ergab. Sie sind daher weggefallen.

Die Windverteilung ist direkt aus den notierten Beobachtungen abgeleitet.

Das Monatsmittel der Windstärke ist das Mittel aus den drei täglichen Beobachtungen.

Sonst gelten für die Übersichtstabellen dieselben Bemerkungen wie für den zweiten Teil.

Anhang I enthält die Abweichungen der Monatsmittel des Luftdrucks und der Temperatur vom Normalwert für beziehungsweise 10 und 18 Stationen. Die verwendeten Normalperioden sind für Luftdruck (1866—95) und für Temperatur (1841—90).

Anhang II gibt die Monats- und Jahresmittel der Temperatur des Ueberflächewassers für 19 Küstenstationen. Die Temperatur wird um 8 Uhr morgens gemessen.

Anhang III enthält die Beobachtungen an den norwegischen Radiostationen in Green Harbour, Spitsbergen, und auf Jan Mayen vom Juli 1924 bis Juni 1925 nebst Monats- und Jahresresuméen für das Jahr 1924.

Der Thermograph in Green Harbour steht in einer norwegischen Hütte, und die stündlichen Temperaturwerte sind auf die Angaben eines dortigen Quecksilberthermometers reduziert.

Auf Jan Mayen sind Luftdruck- Temperatur- und Windbeobachtungen auch um 2 Uhr nachts ausgeführt und hier unter den gewöhnlichen Terminbeobachtungen mitgenommen. Die Stärke des Windes ist im Gegeosatz zu den Beobachtungen der vorigen Jahre nur nach Beauforts Scala angegeben. Das Mittel sowohl der Windstärke als der Bewölkung ist nur aus den Beobachtungen um 8 a, 2 p und 7 p ermittelt worden.

Anhang IV enthält die stündlichen Werte des Luftdrucks und der Temperatur auf Haldde, nebst den Terminbeobachtungen im Laufe des Jahres 1925.

Das Monats- und Jahresresumé findet sich, wie in den vorhergehenden Jahrbüchern, in der dritten Abteilung.

Oslo, Juli 1926.

Verzeichnis der Stationen.

Station.	Ordnung.	Seite. II	Seite. III	Seite. Anhänge.	Breite. N. φ	Länge E Gr. λ	Seehöe H_b (H_r)[1] m.	Höhe des Therm. h_t m.	Höhe des Regenmessers. h_r m.	Schwerekorrektion. C_g Korr. mb.	Schwerekorrektion. C_g bei mb.	Feuchtigkeit instrum.	Die Beobachtungsstunden. Mitteleurop. Zeit.			Beobachter.
Aabjørsbraaten.	III		94		60°55′	9°17′	671	1.5	1.6				8	2	7	O. Aabjørsbraaten, Landmann.
Aabogen	II		96		60 7	12 7	146.7	1.4	1.3	1.25	987	R	8	2	7	H. Tolfsen, Bahnhofsvorsteher.
Aalesund	II	51	128		62 28	6 10	6.3	4.3	1.6	1.55	1020	R	8	2	7	Peder Viddal, Hafenbeamter.
Aas	I		102		59 40	10 46	95.3	2.1	1.6	1.25	959	P	8	2	7	Met. Observ., Aurud, Mechaniker.
Aasberg.	III		100		60 25	8 26	909	1.6	1.0			R	8	2	7	G. Aasberg, Landmann.
Alten	II	75	150	156	69 58	23 15	9.8	2.4	1 9	1.95	985	R	8	2	7	A. Herstad, Telegraphenbeamter.
Andenes	II		146	156	69 20	16 8	7.0	1.3	1.5	2.05	991	D	8	2	7	O. Raanes, Leuchtfeuerwärter.
Asker	III		98		59 51	10 26	152	1.7	1.5				8	2	7	Smaabrukslærerskolen.
Austad	III		108		58 58	7 40	240	2.1	1.3			R	8	2	7	G. O. Austad, Landmann.
Bakke.	III		112		58 25	6 39	57	2.1	1.0			P	8	2	7	Frau Tonette Bakke.
Bergen M. O. .	I	45	120		60 24	5 19	44.4	1.7	1.5	1.35	1014	P	8	2	7	Met. Observ., M. Hansen, Wachtmeister.
Bergen Pl. . . .	II		118	156	60 23	5 21	21.8	4.8	2.0	1.35	1011		8	2	7	Pleiestiftelsen, Laborant.
Bjørnøen	I		154		74 28	19 15	40	1.5	1.5				8	2	7	Telegraphenstation.
Bodø	II	69	140	156	67 17	14 24	22.3	5.6	3.0	1.85	999	P	8	2	7	Telegraphenstation.
Borgvær	II		144		68 20	13 48	7.5	1.4	1.5	2.05	1000	D	8	2	7	E. Lind, Kaufmann.
Brandesund . .	II		116		59 54	5 6	7.8	3 9	1.4	1.35	1018	P	8	1	7	Frau H. Waage, Telephonbeamte.
Brønnø	II	63	138	156	65 28	12 13	6.3	2.2	2.6	1.75	1009	P	8	2	7	H. Andersen, Telegraphenbeamter.
Byglandsfjord .	II		108		58 40	7 48	209.7	2.1	1.3	1.15	967	R	8	2	7	O. Guldsmedmoen, Landmann.
Dalen	II		104		59 27	7 58	103.0	2.6	1.4	1.15	956	R	8	2	7	J. Vistad, Sparkassenverwalter.
Dovre I.	II	27	90	156	62 5	9 7	644.0	1.3	1.6	1.25	961	R	8	2	7	S. Hørte, Telegraphenbeamter.
Dovre II	III		90		62 5	9 7	570	1.5	1.7			R	8	2	7	S. Einbu, Astronom.
Eg	III		110		58 10	7 59	22	1.7	1.4			R	8	2	7	T. Nyberg, Agronom.
Eidfjord	II		118		60 28	7 4	4.7	2.1	1.7	1.35	1010	P	8	1	7	Frl. S. Pedersen, Telephonbeamte.
Eikeland	III		114		58 40	6 10	250	2.2	0.5			P	8	2	7	Olai Vedelden, Lehrer.
Eksingedalen. .	III		122		60 47	5 57	300	3.0	1.6			P	8	2	7	Johs. Flatekvaal, Lehrer.
Engerdalen. . .	III		90		61 40	11 9	540	1.4	1.6			R	8	2	7	O. Nordgaard, Telephonbeamter.
Fjærland	III		124		61 26	6 46	20	2.6	1.4			R	8	2	8	Ivar Böium, Landmann.
Fleinvær	III		140		67 10	13 47	8	1.6	1.5			D	8	1	7	Gunvor Isachsen, Telephonbeamte.
Flisen	III		96		60 37	12 1	176	1.7	1.0			R	8	2	7	Einar Sorknes, Elektriker.
Fokstua.	III		92		62 14	9 16	952	1.6	1.6			R	8	2	7	F. Nordberg, Bahnhofsvorsteher.
Frihetsli	III		148		68 47	19 43	197	1.5	1.3				8	2	7	Joh. Stenvold, Forstbeamter.
Færder	II		102		59 2	10 32	9.1	6.4	1.0	1.25	985	P	8	2	7	F. Hytten, Leuchtfeuerwärter.
Gardøl	III		112		58 30	7 11	200	1.3	1.2				8	2	7	J. A. Hobbesland, Telephonbeamter.
Gjesvær.	II		150	156	71 6	25 22	10.0	1.9	1.5	2.15	1019		8	1	7	Frau E. Isaksen, Telegraphenbeamte.
Glomfjord . . .	III		140		66 48	14 0	6	1.6	1.7				8	2	7	Actiengeselsch, Glomfjord.
Granheim. . . .	II		92	156	61 6	8 58	390.9	1.8	1.5	1.15	922	R	8	2	7	J. Værnes, Pfarrer.
Granvin.	III		118		60 35	6 49	345	1.5	1.7				8	2	7	J. Espeland, Landmann.
Grimstad	III		106		58 20	8 36	7	4.1	1.3			R	8	2	7	Frantz Nilsen, Telegraphenbote.
Grøtøy	III		142		67 50	14 46	2	2.0	1.6			D	8	2	7	Alfred Dahl.
Gvarv	II		104		59 24	9 10	24.8	3.3	1.3	1.25	972	R	8	2	7	Saugestad, Apotheker.
Haldde	I		148	179	69 56	22 56	892.8	2.9	5.3	1.65	915	P	8	2	7	Magn.-Met. Observatorium.
Hamar	II		96		60 48	11 4	139.8	1.4	1.0	1.35	1013	R	8	2	7	J. Rud, Lehrer
Hatfjelddalen .	III		138		65 36	14 0	222	1.8	2.0			R	8	2	7	E. Havig, Schulze.
Hellesylt	II		126		62 5	6 52	11	6.1	1.2			P	8	2	7	Frau R. Ljöen, Postbeamte.
Hellisø	III		122	156	60 45	4 43	19	1.7					8	2	7	Iv. J. Tangen, Leuchtfeuerwärter.
Horten	III		102		59 20	10 28	4	2.0	1.4			R	8	2	7	Joh. Hanssen.
Hægeland . . .	III		108		58 25	7 46	174	1.4	1.4			R	8	1	7	Frau Torborg Ask.
Ingøy	II		150	156	71 4	24 6	7.5	1.3	1.4	2.05	975		8	2	7	I. Fjeldstad, Telegraphenbeamter.
Jan Mayen. . .	I			171	70 59	WGr. 8 18 E Gr.	23.1	2.0	1.5	2.35	1012	P	8	2	7	Telegraphenstation.
Jomfruland. . .	III		106		58 52	9 36	17	2.2	1.6			R	8	2	7	Chr. M. Jensen, Leuchtfeuervärter.
Karasjok	II		154		69 25	25 35	128.7	1.6	1.5	1.85	969		8	2	7	J. J. Nielsen, Kaufmann.
Kautokeino . .	III		154		68 59	23 7	317	1.8	1.8				8	1	7	Frau Julie Oskal.
Kinn	III		126		61 33	4 48	8	1.5	1.4			P	8	2	7	Peder Gjertsen, Telephonbeamter.
Kistrand	III		150		70 28	25 13	11	1.8	1.5			D	8	2	7	Olaf Sætrum.
Kjeller	III		98		59 58	11 2	203	1.8	1.0			R	8	2	7	K. Gløimmi, Sergeant
Kongens Grube	III		88		62 40	11 18	856	2.0	1.0				8	2	7	Røros Bergwerk, die Bureaubeamten.
Kutjern	II		96		60 34	10 33	495.5	2.0	1.6	1.25	1011	R	8	1	7	Fr. Andreassen, Telegraphenbeamter.
Kvassheim . . .	II		114		58 33	5 40	9.0	4.3	1.6	1.25	1033	P	8	2	7	O. Zahl, Leuchtfeuerwärter.
Lesjeværk . . .	III		130		62 11	8 34	630	1.4	1.6			R	8	2	7	M. Thøring, Landmann.
Lillehammer . .	II		94		61 7	10 28	195.1	7.1	1.4	1 35	1023		8	2	7	K.B.Bjørnsgaard, Telegraphenbeamter.
Lillehavn	III		110	156	58 0	7 6	2	2.0	1.5			P	8	2	7	L. C. Hansen, Kaufmann.
Lister	II		112		58 6	6 34	13.1	1.4	1.5	1.15	973	P	8	2	7	T. E. Tønnesen, Leuchtfeuerassistent.
Ljøsne	III		124		61 3	7 37	107	1.5	1.5				8	2	7	O. Wendelbo, Fahnenjunker.
Loppa.	III		148	156	70 20	21 27	10	1.5	1.3				8	2	7	Osv. Soelberg, Kaufmann.
Lyngør	II		106		58 38	9 7	6.8	1.8	1.6	1.25	1000	R	8	2	7	K. G. Nielsen, Kaufmann.
Lyster	III		124		61 26	7 26	502	1.9	1.7			P	8	2	7	Lungenheilstätte, Frl. Inga Knudsen.

[1] Für die Stationen von I und II Ordnung bezieht sich die Seehöhe auf das Quecksilberbarometer (H_b), für die von III Ordnung auf den Regenmesser (H_r).

Station	Ordnung.	Seite. II	Seite. III	Seite. Anhänge.	Breite. N. φ	Länge E. Gr. λ	Seehöe Hb (H)[1] m.	Höhe des Therm. ht m.	Höhe des Regenmessers hr m.	Schwerekorrektion. Cg Korr. mb.	Schwerekorrektion. Cg bei mb.	Feuchtigkeit instrum.	Die Beobachtungsstunden. Mitteleurop. Zeit.	Beobachter.
Lærdal	II		124		61° 6′	7° 29′	3.0	1.6	1.1	1.35	999	P	8 2 7	O. Wangensteen, Telegraphenbote.
Lødingen	III		142		68 25	16 0	9	1.6	1.8			P	8 2 7	Brække, Mechaniker.
Mandal	II		110		58 2	7 27	4.5	2.9	1.3	1.15	996	P	8 2 7	Olav Nyvold Telegraphenbeamter.
Mehavn	II		152		71 1	27 47	10.2	1.3	1.8	2.15	1018	R	8 2 7	P. Midtgaard, Telegraphenbote.
Mesnalien	II		94		61 6	10 43	574.1	1.5	1.2	1.15	919	P	8 2 7	Lungenheilstätte, Frl. S. Börke.
Modum	III		98		59 58	10 0	135	1.6	1.2			R	8 1[15] 7	K. Basserud, Lehrer.
Molde	II		128		62 44	7 10	17.9	1.8	1.1	1.55	1015		8 2 7	Lungenheilstätte, Ruud, Verwalter.
Myken	II		140	156	66 46	12 29	18.0	1.6	1.6	1.85	1015	D	8 1 7	P. Moe.
Mykland	III		108		58 38	8 17	280	2.5	1.3			R	8 2 7	Frau Guro Mykland.
Nes	III		100		60 35	9 6	165	1.4	1.1			R	8 2 7	Frl. Solveig Wøllo.
Nordfjordeid	III		126		61 55	6 0	5	1.6	1.4			R	8 2 7	A. K. Haugland, Lehrer.
Nordli	III		136		64 28	13 35	395	1.7	1.5			P	8 2 7	Birger Nordback.
Nordøerne	III		136	156	64 48	10 33	31	2.0	0.7				8 2 7	M. Haraldsø, Leuchtfeuerwärter.
Nygaard	III		100		60 31	7 50	996	1.7	1.9				8 2 7	A. Hjørnevik, Bahnaufseher.
Obrestad	II		114		58 39	5 34	27.8	3.4	1.7	1.25	1019	P	8 2 7	J. L. Heum, Leuchtfeuerwärter.
Oksø	II	39	110	156	58 4	8 4	10.7	1.7	1.6	1.15	984	P	8 2 7	A. H. Wright, Leuchtfeuerwärter.
Oslo (Kristiania)	I	1	98	156	59 55	10 43	24.9	2.1	2.6	1.35	1009	P	8 2 7	Met. Institut, Tveter, Wachtmeister.
Ona	II		128	156	62 52	6 33	12	3.7	1.2				8 2 7	J. Viken, Postbeamter.
Opstryn	III		126		61 56	7 13	205	1.6	1.0				8 2 7	Frl. I. Skaare.
Plassen	III		90		61 7	12 23	330	1.4	1.4			R	8 2 7	Per Nyvold, Telephonbeamter.
Rena	II		94		61 8	11 22	225.2	1.5	1.1	1.35	1002	R	8 2 7	Frl. Martha Alme.
Rosvikvaagen	III		138		65 4	11 48	15	1.5	1.5			R	8 1 7	O. Hoel, Kaufmann.
Runde	II		128	156	62 23	5 38	20.5	1.7	1.4	1.55	1017	P	8 2 7	Frl. Karoline I. Runde, Telephonbeamte.
Rundemanden	II		120		60 24	5 22	556.7	1.5	1.5	1.15	937	R	8 2 7	Telegraphenstation.
Røros	II		88	156	62 34	11 23	629.7	1.6	1.8	1.25	940	R	8 2 7	J. A. Sæther, Bahnhofsvorsteher.
Røst	II		144		67 30	12 4	10.5	3.0	1.2	1.95	982	P	8 2 7	G. Krogh, Telegraphenbeamter.
Sand i Senjen	III		146		68 57	16 40	17	2.4	1.6				8 2 7	A. Skogsletten, Telephonbeamter.
Sandstad	III		132		63 32	9 6	10	1.4	1.6			P	8 2 7	O. W. Stub.
Selbu	III		134		63 13	11 7	220	1.8	1.0			R	8 2 7	Olav Engen, Holzschneider.
Siččajavre	III		154		68 45	23 32	380	1.5	1.4			D	8 2 7	E. E. Övergaard, Landmann.
Skaalvær	III		138		65 52	12 11	6	1.5	1.5			D	8 2 7	Henrik Jensen, Kaufmann.
Skagen i Bø	III		144		68 37	14 27	7	1.6	1.6			D	8 1 7	Peter Skagen, Kaufmann.
Skomvær	III		144	156	67 24	11 54	16	2.4	1.2				8 2 7	B. Elstrand, Leuchtfeuerwärter.
Skudenes	II		114	156	59 9	5 16	6.9	5.4	2.2	1.25	972	P	8 2 7	J. Hellesland, Telegraphenbeamter.
Slira	II		120		60 35	7 25	1300.5	3.0	2.8	0.95	916	R	7 2 7	L. Ekse, Bahnaufseher.
Slotterøy	III		116	156	59 54	5 4	15	2.0	1.5			P	8 2 7	T. A. Salvesen, Leuchtfeuerwärter.
Snaasa	III		136		64 16	12 33	142	1.7	1.4				8 2 7	Frau Inga Engum.
Sommerøy i Senjen	III		146		69 37	18 3	6	2.0	1.6				8 2 7	Carl Bertheussen.
Spitsbergen	I			158	78 2	14 14	11.4	1.3	3.1	2.45	1019	R	8 2 7	Telegraphenstation.
Stenkjær	II		136		64 1	11 30	9.8	5.0		1.65	1019	R	8 2 7	Frl. Eggen, Telegraphenbeamte.
Stondal	III		122		60 50	7 21	657	2.0	1.5				8 2 7	Iver O. Veum, Landmann.
Strand	III		88		62 1	10 49	475	1.3	1.5			R	8 2 7	Marit Nordrum, Postbeamte.
Stugudalen	III		134		62 54	11 52	613	2.6	1.4				8 2 7	P. O. Stugudal, Landmann.
Sundalen	III		130		62 33	9 6	200	1.6	1.2				8 2 7	G. Nisja, Landmann.
Sundalsøren	II		130		62 41	8 34	5.9	2.2	1.3	1.55	1023	P	8 2 7	Frl. G. Hansen Telegraphenbeamte.
Suul	III		134		63 40	12 1	255	1.3	0.9				8 2 7	Andreas Brændmo, Handlungsdiener.
Svandalsflona	III		116		59 50	6 59	1066	1.5	2.0				8 2 7	Torjus Svandalsflona, Strasseninspektor.
Svolvær	II		142		68 14	14 37	4.0	2.4	0.9	2.05	1025	P	8 2 7	O. Strøm, Telegraphenbeamter.
Sværholt	III		150	156	70 57	26 41	3	1.6	1.5			D	8 2 7	K. Gilberg.
Søfteland	III		120		60 14	5 27	54	2.5	1.0				8 2 7	Frau Hagem.
Sørvaagen	III		142	156	67 53	13 1	10	2.0	1.6			D	9 1 7	O. Rasmussen, Telegraphenbote.
Tana	III		152		70 27	28 15	5	1.8	1.7			D	8 2 7	A. Henriksen.
Titran	II		132	156	63 40	8 19	6.5	1.8	1.6	1.65	1015	P	8 2 7	Herman Gaustad, Geschäftsführer.
Tonstad	II		112		58 40	6 43	58.9	1.4	1.3	1.25	1035		8 1 7	Evert Bjunes, Landmann.
Torungen	III		106	156	58 24	8 48	10	1.6					8 2 7	Chr. S. Andersen, Leuchtfeuerass.
Tromsö	II		146	156	69 39	18 58	44.8	6.0	1.5	1.95	983	P	8 2 7	M. Stigen, Küster.
Tromsø Geof. I.	I		148		69 39	18 58	110.0	3.2	2.0	1.95	990	D	8 2 7	Geof. Institut.
Trondhjem	I	57	132		63 26	10 25	37.0	1.5	1.0	1.55	994	P	8 2 7	Håkonson-Hansen, Oberlehrer.
Tveitsund	III		104		59 1	8 31	257	4.2	1.2			R	8 2 7	Frl. Susanne Tveit, Telephonbeamte.
Tönset	III		88		62 17	10 45	490	2.1	1.3			R	8 2 7	Frau Sigrid Tangen.
Ulefoss	III		104		59 17	9 16	92	0.9	1.0				8 2 7	J. Hansen, Schleusenwärter.
Ullensvang	II		118	156	60 20	6 40	58.6	5.0	1.0	1.35	1017	P	8 2 7	H. I. Helleland.
Ulstad	III		92		61 50	8 34	380	1.7	1.0				8 2 7	Erik Rudser, Küster.
Utsire	II		116	156	59 18	4 53	57.5	1.9	1.4	1.25	965	P	8 2 7	Fridtjov Aspen, Leuchtfeuerwärter.
Vallersund	II		132		63 52	9 45	8	2.0	1.4			P	8 2 7	J. Ugedal, Telephonbeamter.
Vangsnes	II		122		61 10	6 38	52.1	1.4	1.4	1.35	979	P	8 2 7	Ole Larsen, Telephonbeamter.
Vardø	II	81	152	156	70 22	31 8	6.8	1.7	1.6	2.05	990	R	8 2 7	N. Hollund, Telegraphenbeamter.
Veggli	III		100		60 3	9 10	203	1.8	1.0			R	8 2 7	Frau G. Valle.
Verdalen	III		134		63 46	8 59	60	1.4					8 2 7	Chr. Fuglaas, Lehrer.
Vinjeøren	II		130		63 12	11 31	16.0	1.6	1.4	1.55	989		8 1 7	Andreas Nielsen, Postbeamter.
Vinstra	II		92		61 36	9 46	243.9	1.5	0.9	1.35	1006	R	8 2 7	A. Thorsheim, Schmied.
Ømark	II		102		59 24	11 40	126.5	1.3	1.4	1.25	1011		8 2 7	Frl. Hedvik Wiik, Postbeamte.

[1]) Für die Stationen von I und II Ordnung bezieht sich die Seehöhe auf das Quecksilberbarometer (Hb), für die von III Ordnung auf den Regenmesser (H).

STÜNDLICHE AUFZEICHNUNGEN

ÜBER

LUFTDRUCK UND TEMPERATUR

IN OSLO
(KRISTIANIA)

UND

NIEDERSCHLAG UND LUFTELEKTRISCHES POTENSIALGEFÄLLE

IN AAS

1925.

$H = 22\,m$, $H_b = 24.9\,m$ $\varphi = 59^0\ 55'$ N

$C_g = 1.35\,mb$ bei $1009\,mb$ $\lambda = 10^0\ 43'$ E

Januar.

Datum	1a	2a	3a	4a	5a	6a	7a	8a	9a	10a	11a	MT	1p	2p	3p	4p	5p	6p	7p	8p	9p	10p	11p	MN	Mittel
	900 oder 1000 mb +																								
1	85.2	85.3	86.0	85.8	86.4	86.6	87.1	87.7	88.0	88.6	88.7	88.6	88.6	88.6	88.8	88.7	**88.7**	89.0	89.0	88.9	87.4	85.8	83.6	**81.6**	87.20
2	**78.6**	75.6	72.4	69.3	66.1	63.6	63.3	64.5	65.6	65.8	65.9	66.4	66.6	66.8	67.0	67.2	66.9	66.8	65.8	64.7	62.0	59.3	56.6	**55.7**	65.95
3	**55.8**	55.9	57.0	59.4	61.1	63.9	66.1	67.9	70.0	71.7	72.7	73.6	73.9	74.5	74.6	74.8	75.6	76.5	77.5	78.2	78.9	79.7	80.4	**80.8**	70.85
4	**81.3**	82.0	82.1	82.1	82.3	82.8	82.8	84.6	85.1	85.1	84.7	84.4	84.0	82.7	82.4	82.3	82.2	82.2	82.5	83.4	85.3	86.4	87.4	**88.6**	83.70
5	**90.3**	91.6	92.6	93.4	94.0	94.9	95.0	95.8	96.7	96.9	**97.3**	97.3	96.7	96.2	95.7	95.5	94.9	94.7	94.4	94.4	93.9	93.9	93.5	93.2	94.70
6	93.2	**93.1**	93.2	93.3	93.7	94.4	94.6	95.5	96.5	96.7	96.8	97.6	98.3	99.2	00.6	01.9	02.8	03.7	04.3	05.0	05.2	**05.8**	05.8	05.6	99.03
7	**05.1**	04.9	04.0	03.0	01.6	00.1	98.6	97.3	96.5	95.3	94.6	94.0	93.5	92.9	92.4	**92.2**	92.3	92.7	94.7	96.0	97.8	98.8	99.3	00.2	97.41
8	01.1	02.0	02.3	03.0	03.1	03.2	03.4	03.8	04.4	**04.6**	04.5	04.5	04.4	04.2	04.1	03.8	03.3	03.1	02.1	01.4	01.1	00.2	99.7	**99.0**	02.76
9	**98.7**	98.1	97.4	96.7	95.8	94.9	94.5	93.5	92.9	92.8	92.2	91.9	91.8	92.6	94.1	96.5	98.6	01.2	03.7	05.0	05.9	07.5	08.1	**09.3**	98.07
10	10.3	11.5	12.7	13.2	14.3	15.2	15.6	16.6	17.0	17.4	**17.6**	16.7	16.0	15.3	14.5	13.3	12.3	11.3	10.7	10.0	09.4	08.9	08.6	**08.0**	13.18
11	07.9	07.3	07.1	07.0	06.7	**06.3**	06.9	07.3	08.0	08.8	09.3	10.3	11.0	11.8	12.4	13.5	14.3	14.9	15.4	15.6	15.9	16.5	16.6	**16.7**	11.15
12	**17.1**	17.4	17.7	17.8	17.8	18.4	18.8	19.0	**19.3**	19.2	19.2	18.8	18.5	18.2	18.5	18.4	18.4	18.4	18.2	18.1	18.0	17.9	17.9	17.8	18.28
13	17.3	17.1	17.1	17.0	17.1	17.1	17.5	17.6	17.8	**18.0**	18.0	17.9	17.3	16.9	16.5	16.4	**16.4**	16.4	16.6	16.5	16.5	16.8	17.0	17.0	17.08
14	**16.3**	16.1	15.5	15.2	15.0	13.9	13.3	12.4	12.0	11.1	10.2	09.5	08.4	07.2	05.3	05.1	04.7	03.4	02.9	**02.2**	02.8	03.0	03.4	03.4	08.85
15	03.5	03.5	03.5	03.5	03.5	03.5	03.5	03.6	02.8	02.5	01.4	01.4	00.2	**99.8**	00.1	00.6	01.6	02.6	03.8	04.7	06.6	07.8	09.0	**10.5**	03.48
16	**11.2**	11.6	12.7	13.1	13.4	13.8	13.6	13.8	14.4	14.3	14.2	13.9	13.8	13.5	13.8	13.6	14.0	13.9	14.8	14.7	14.9	15.7	**15.8**	15.8	13.93
17	**16.1**	16.4	16.7	17.0	17.4	17.9	18.5	18.5	19.4	19.9	20.3	20.2	20.2	20.5	20.7	21.3	21.4	21.5	21.7	21.8	22.3	**22.5**	22.5	22.4	19.88
18	22.6	22.8	**23.1**	22.7	22.6	22.4	22.4	22.4	22.4	22.4	22.5	22.3	22.1	21.6	21.4	21.2	21.0	20.3	19.1	18.4	17.8	17.8	**17.3**	18.0	21.11
19	**19.1**	20.0	20.7	22.2	23.3	24.9	25.7	26.4	29.9	31.6	33.0	34.3	35.1	36.4	37.9	38.9	40.4	40.6	41.4	41.9	42.5	43.4	44.0	**44.3**	33.25
20	**44.3**	44.2	44.2	44.1	43.5	43.4	43.4	43.3	43.3	43.2	43.1	42.5	42.3	41.9	41.5	41.5	41.3	41.3	41.0	40.8	40.8	40.7	40.7	**40.4**	42.36
21	**39.9**	39.8	39.7	39.6	39.5	39.5	39.4	39.0	39.0	39.4	39.3	39.0	38.7	38.6	**38.0**	38.0	38.2	38.2	38.3	38.3	38.3	38.3	38.3	38.2	38.85
22	**38.3**	37.8	37.7	37.6	37.4	36.9	36.7	36.7	36.7	36.7	36.5	35.8	35.4	34.8	34.2	33.6	33.3	32.6	31.9	31.5	30.8	30.5	30.0	**29.5**	34.70
23	**29.1**	28.4	27.7	27.3	26.4	26.2	26.0	24.9	24.4	24.3	24.1	23.5	23.1	22.9	22.3	22.1	22.2	22.1	**21.9**	22.0	22.2	22.3	22.5	22.6	24.19
24	**22.7**	22.9	23.3	23.5	23.9	24.5	25.1	26.1	26.7	27.5	28.3	28.4	28.5	28.7	29.1	29.9	30.2	30.5	31.4	31.5	31.9	32.4	32.9	**33.1**	28.04
25	**33.2**	33.3	33.7	33.9	34.7	35.3	35.9	36.9	38.3	39.2	39.8	40.1	40.2	40.6	41.1	41.2	42.0	42.2	43.1	43.2	43.6	43.9	44.1	**44.2**	39.32
26	**44.2**	44.2	44.1	44.0	43.9	43.9	44.0	44.0	43.8	43.9	43.8	43.6	42.9	42.3	42.0	41.6	41.5	41.3	41.1	41.0	40.7	40.2	39.8	**39.6**	42.56
27	**38.7**	38.4	37.7	37.3	36.9	36.5	35.7	35.0	34.5	34.2	33.5	33.2	32.5	31.6	30.7	30.3	29.6	29.5	28.5	28.1	27.9	27.6	27.2	**26.6**	32.57
28	**25.8**	25.4	24.7	24.3	23.6	22.8	22.1	21.6	20.7	20.5	19.8	18.9	18.4	17.7	16.8	16.6	16.1	15.8	15.5	15.1	14.7	14.6	14.5	**14.4**	19.18
29	**14.3**	13.8	13.6	13.2	12.8	12.6	12.5	11.8	11.3	10.7	09.9	08.9	07.8	05.2	03.0	00.8	98.0	95.8	92.7	90.2	87.8	85.3	83.2	**81.5**	03.20
30	80.8	**80.8**	80.8	80.9	81.4	82.0	82.2	82.8	83.1	83.4	83.8	83.5	83.7	83.9	83.9	84.1	84.6	85.3	85.6	85.7	86.1	86.3	86.3	**86.4**	83.64
31	**86.3**	85.9	85.0	83.1	80.2	78.6	76.9	75.0	74.2	74.1	74.1	73.8	**73.8**	74.6	76.0	77.6	79.4	81.6	82.7	83.7	84.4	84.6	84.4	84.5	79.77
M.	10.59	10.55	10.52	10.44	**10.30**	10.32	10.36	10.49	10.80	**10.96**	10.94	10.80	10.57	10.38	10.30	10.40	10.52	10.63	10.72	10.71	10.75	10.79	10.66	10.61	10.59

Februar.

Datum	1a	2a	3a	4a	5a	6a	7a	8a	9a	10a	11a	MT	1p	2p	3p	4p	5p	6p	7p	8p	9p	10p	11p	MN	Mittel
1	**84.8**	85.1	85.4	85.8	86.1	86.8	87.7	88.8	89.9	90.8	91.1	92.1	92.8	93.8	94.9	96.0	97.0	98.1	99.4	00.5	02.2	03.1	04.6	**05.6**	93.43
2	06.8	07.9	09.2	10.2	11.5	12.0	12.2	13.1	**13.6**	13.5	13.2	12.9	12.1	11.2	10.2	09.4	08.0	06.9	05.8	05.1	04.8	04.7	**04.5**	04.5	09.29
3	04.6	04.4	04.3	04.5	04.8	05.0	05.8	06.4	**06.9**	06.9	06.7	06.5	06.0	05.7	05.0	04.9	04.6	04.0	03.2	02.4	01.2	99.8	98.4	**97.4**	04.14
4	96.7	96.2	**96.1**	97.0	97.7	98.2	99.9	00.1	00.8	01.7	02.5	03.1	03.8	04.4	05.0	05.2	06.0	06.8	07.6	08.2	08.8	09.0	09.1	**09.3**	03.05
5	**08.9**	08.1	06.9	05.9	04.1	02.7	00.5	98.7	97.0	95.9	94.7	93.0	92.0	90.9	90.3	**90.1**	90.6	90.8	90.6	90.8	90.6	90.6	90.3	90.2	96.01
6	90.1	90.2	90.1	89.9	89.6	89.2	89.1	88.9	88.9	89.1	89.0	88.9	**88.5**	88.7	88.8	88.9	88.8	89.7	89.9	90.0	90.6	90.6	91.0	**91.1**	89.57
7	**91.3**	91.3	91.4	91.5	91.7	92.3	92.9	93.8	94.7	95.3	95.7	96.3	96.6	97.4	97.6	98.6	99.5	00.2	01.2	01.8	02.2	03.0	03.5	**03.6**	96.81
8	**03.6**	03.6	03.4	03.1	02.9	02.5	01.9	01.2	01.0	00.3	99.2	97.8	96.3	94.9	93.3	92.5	91.2	90.2	88.2	87.0	85.1	83.4	82.0	**80.1**	95.20
9	78.0	75.9	74.0	72.9	72.8	**72.4**	72.8	73.0	74.9	75.8	76.1	76.5	76.9	76.9	77.2	77.6	77.7	78.1	78.2	79.2	79.4	80.2	80.4	**81.2**	76.61
10	81.7	82.8	84.1	85.3	86.8	87.7	88.9	90.1	**90.6**	90.5	89.9	89.9	89.2	88.2	87.7	87.0	86.2	85.3	83.0	80.6	78.2	**77.2**	77.2	77.5	85.23
11	**79.2**	80.8	81.6	82.3	82.5	82.8	83.2	83.6	83.9	84.5	84.7	84.7	84.9	85.4	85.5	85.8	85.9	85.9	86.6	86.7	86.9	87.4	**87.7**	87.7	84.59
12	87.5	87.1	86.8	85.6	84.8	83.9	83.4	82.3	81.5	80.2	79.2	**78.7**	79.2	79.9	80.6	81.2	81.9	83.2	84.5	85.2	86.2	87.3	87.7	**89.2**	83.63
13	**89.6**	90.3	90.6	91.2	91.7	92.6	93.2	94.2	94.5	94.6	94.6	95.2	95.9	96.8	97.3	97.3	97.5	98.1	98.3	98.3	98.4	98.4	98.6	**98.9**	95.25
14	99.2	99.4	99.5	99.5	99.6	99.6	99.6	00.4	00.6	**00.8**	00.6	00.4	99.8	99.4	99.5	**98.8**	99.3	99.2	99.5	99.3	99.8	99.5	99.4	98.9	99.65
15	98.6	97.6	97.1	96.6	95.9	95.5	**95.3**	95.3	97.1	98.2	99.3	99.8	00.4	00.8	01.6	01.9	02.7	03.3	04.2	**05.0**	04.9	05.0	04.9	04.8	00.24
16	**04.7**	04.4	04.1	03.9	03.8	02.7	02.6	02.0	00.9	01.0	99.5	00.0	**99.2**	99.9	00.0	00.1	00.0	00.5	01.2	01.3	01.9	02.2	02.2	02.2	01.68
17	02.4	02.4	02.3	02.3	02.3	02.4	02.2	02.2	**02.5**	02.5	02.4	02.4	02.1	01.8	01.5	**01.4**	01.5	01.6	01.7	01.8	01.8	01.7	01.7	01.7	02.02
18	01.8	01.9	01.9	**01.8**	01.9	01.9	01.9	02.3	02.5	02.9	**03.1**	03.1	03.0	03.0	02.9	02.8	02.8	02.8	02.7	02.4	02.2	02.1	01.9	01.9	02.40
19	**02.1**	02.1	02.2	02.3	02.8	03.6	04.4	05.4	06.1	06.2	06.3	06.3	06.3	06.6	07.2	07.4	08.2	08.5	09.5	09.8	10.3	10.9	11.4	**11.7**	06.57
20	11.9	12.4	12.5	12.5	12.6	12.7	12.9	13.1	**13.9**	13.7	13.6	13.4	12.8	12.5	12.2	11.8	11.7	**11.5**	11.6	11.6	11.6	11.6	11.6	11.5	12.38
21	11.4	11.3	11.2	10.9	10.7	10.7	**10.6**	10.6	10.8	11.0	11.3	11.4	11.4	11.5	11.5	11.5	11.6	11.8	12.1	12.2	12.6	12.8	13.1	**13.3**	11.55
22	**13.9**	14.0	14.1	14.7	14.8	14.9	15.0	15.3	15.6	16.1	16.3	16.5	16.6	16.6	17.1	17.0	16.9	17.0	17.3	17.3	17.6	17.6	**17.6**	17.5	16.14
23	**17.4**	17.3	16.9	16.5	16.5	16.6	16.4	16.3	16.3	16.2	16.1	15.8	15.2	14.4	14.1	13.6	13.4	13.5	13.3	13.2	13.2	13.1	13.0	**12.9**	15.05
24	**12.8**	12.4	12.0	11.5	11.2	11.0	11.0	11.0	11.0	10.4	10.3	10.0	09.8	09.0	08.4	08.1	07.8	07.4	07.1	06.4	06.2	05.6	05.3	**04.7**	09.18
25	04.5	04.2	03.5	02.7	**02.6**	02.6	02.9	03.4	03.7	04.5	04.7	**04.8**	04.7	04.7	04.6	04.5	04.5	04.5	04.5	04.0	04.0	03.7	03.5	03.1	03.93
26	**02.8**	02.7	02.6	02.4	02.2	02.0	01.9	02.0	02.0	01.8	01.8	01.9	01.9	01.7	01.8	01.6	**01.2**	01.3	01.6	01.7	01.9	01.8	01.8	01.8	01.92
27	**01.8**	01.7	01.6	01.2	01.1	01.0	01.0	01.0	00.8	00.7	00.5	00.3	00.0	99.8	99.7	99.5	**99.2**	00.0	99.8	99.7	99.7	99.6	99.7	99.6	00.37
28	99.7	99.7	99.7	**99.6**	99.7	99.8	00.0	00.2	00.4	00.6	00.8	01.1	01.2	01.2	01.4	01.7	02.0	02.2	02.7	03.4	03.7	04.1	04.3	**04.5**	01.40
M.	99.56	99.54	99.47	**99.41**	99.45	99.47	99.61	99.81	00.09	00.20	00.11	00.10	99.95	99.90	99.89	99.86	99.92	00.09	00.19	00.18	00.22	00.21	**00.23**	00.23	99.90

$H = 22\,m$, $H_b = 24.9\,m$ $\varphi = 59^0\ 55'$ N

$C_g = 1.35$ mb bei 1009 mb **März.** $\lambda = 10^0\ 43'$ E

Datum	1a	2a	3a	4a	5a	6a	7a	8a	9a	10a	11a	MT	1p	2p	3p	4p	5p	6p	7p	8p	9p	10p	11p	MN	Mittel
	900 oder 1000 mb +																								
1	**04.9**	05.3	05.4	05.5	05.7	06.4	06.5	07.3	08.0	08.4	08.7	09.3	09.4	09.8	09.9	10.4	10.5	10.8	11.6	11.8	12.5	12.7	12.8	**13.2**	09.03
2	**13.6**	13.7	13.8	14.0	14.4	14.6	14.9	15.8	16.0	16.5	17.3	17.8	18.3	18.6	19.1	19.3	20.1	20.4	21.2	21.6	22.3	22.6	23.4	**24.2**	18.06
3	24.5	24.7	25.7	25.7	25.5	25.5	25.8	26.3	**26.6**	26.6	26.5	26.0	25.7	24.9	24.7	24.6	24.6	24.5	24.2	**24.1**	24.1	23.8	23.8	**23.1**	25.06
4	**22.5**	21.9	21.6	20.9	20.5	19.1	18.8	17.2	16.6	15.6	14.8	13.9	13.2	**12.2**	12.3	12.4	12.8	12.9	13.1	13.6	13.7	14.1	13.9	13.8	15.89
5	**13.2**	12.9	12.9	12.0	11.8	11.4	10.6	09.2	08.0	07.0	05.0	03.0	00.6	96.8	93.8	91.6	89.1	87.0	84.9	83.7	83.5	83.2	82.5	**81.8**	99.00
6	81.7	80.9	**80.7**	81.2	81.2	81.5	81.7	81.9	82.1	82.6	83.0	83.5	83.6	**83.6**	83.5	83.5	83.4	83.0	83.2	82.9	82.7	82.6	82.4	82.5	82.45
7	82.6	82.7	82.6	**82.6**	82.6	82.7	82.8	83.1	83.5	83.4	83.2	83.3	83.5	83.2	83.1	83.0	83.8	84.3	85.8	86.5	87.2	88.0	88.4	**89.1**	84.21
8	**89.3**	89.6	89.6	89.6	90.2	90.5	90.7	91.3	91.6	91.6	91.8	91.8	91.9	91.8	92.1	92.2	92.5	92.8	93.7	93.9	94.1	94.5	94.8	**95.0**	91.95
9	**95.2**	95.5	95.9	96.1	96.5	97.1	97.9	98.6	99.4	99.7	00.4	00.7	01.0	01.7	02.1	02.8	03.3	04.2	05.2	05.7	06.4	07.2	07.6	**08.5**	01.20
10	**09.1**	09.6	10.4	10.9	12.0	12.7	13.5	14.6	14.9	15.6	16.0	16.5	16.8	17.2	17.3	17.6	18.1	18.5	19.1	19.7	20.4	20.5	20.8	**21.0**	15.95
11	21.2	21.1	20.9	20.9	20.9	**20.8**	20.8	21.4	22.4	23.1	23.9	23.9	23.8	23.9	**24.0**	23.9	23.7	23.7	23.7	23.7	23.6	23.3	22.9	22.7	22.68
12	22.4	**22.4**	21.7	21.7	21.9	22.1	22.4	22.3	21.9	21.4	21.4	20.7	20.4	19.8	19.4	18.9	18.6	18.5	18.0	17.7	17.5	17.5	17.5	**17.4**	20.15
13	**17.7**	17.6	17.5	17.5	17.5	17.5	17.5	17.3	16.8	16.5	15.7	15.3	14.7	13.8	13.2	12.6	12.3	12.0	11.6	11.5	11.3	**11.2**	11.3	11.4	14.64
14	11.5	11.4	11.4	**11.4**	11.4	11.6	11.7	12.4	12.5	12.5	12.5	12.5	12.5	12.3	12.0	11.9	11.9	12.0	12.6	12.9	13.7	14.1	14.5	**14.8**	12.42
15	**15.3**	15.8	16.0	16.2	16.8	17.5	18.1	19.1	20.0	20.4	21.0	21.0	21.5	22.4	22.4	22.7	23.0	23.8	24.7	25.8	26.9	27.5	28.3	**29.2**	21.48
16	30.1	30.6	31.2	31.4	31.6	31.8	32.1	32.7	**32.8**	32.7	32.3	31.7	31.1	30.5	29.8	28.9	27.7	26.2	25.1	24.1	23.4	22.5	20.8	**20.2**	28.80
17	19.6	19.4	**19.4**	19.4	19.7	20.7	21.3	21.5	21.6	21.8	21.7	21.7	21.7	22.1	22.0	22.0	22.2	22.6	23.3	23.7	24.1	24.4	**24.4**	24.4	21.86
18	**24.1**	23.7	23.7	23.4	23.0	22.9	22.8	22.1	22.1	21.9	21.7	20.9	20.4	19.5	18.7	18.4	18.2	**18.1**	18.3	18.5	18.6	18.6	18.4	18.1	20.67
19	**17.6**	17.2	16.6	15.7	15.2	14.6	14.3	13.6	12.7	12.6	12.4	12.0	11.7	11.2	10.8	10.4	10.5	**10.4**	10.4	10.6	10.7	10.6	10.6	10.5	12.62
20	**09.7**	09.5	08.8	08.1	07.5	07.2	06.8	06.3	06.0	05.9	05.6	05.4	04.8	04.2	03.8	03.7	**03.6**	03.6	03.7	03.7	03.8	03.9	04.0	04.0	05.57
21	**04.1**	04.2	04.4	04.5	04.6	04.7	04.9	05.6	05.9	06.0	05.9	05.7	05.6	05.5	05.5	05.5	05.7	05.9	06.7	07.2	07.8	08.3	08.9	**09.2**	05.93
22	**09.7**	10.0	10.5	10.9	11.0	11.6	11.9	12.5	12.7	12.9	13.0	13.0	13.0	12.8	12.7	12.5	12.7	12.8	12.7	12.8	13.0	13.3	13.5	**13.6**	12.30
23	**13.7**	13.6	13.1	13.0	12.9	12.9	12.9	12.9	13.0	12.6	12.4	11.6	11.1	10.4	10.1	09.6	09.5	09.5	09.4	09.2	09.1	08.7	**08.6**	08.6	11.18
24	**08.5**	07.9	07.6	06.9	06.7	06.6	06.5	06.1	06.1	06.0	05.9	05.8	05.6	05.2	05.1	**05.0**	05.1	05.3	05.8	06.0	06.0	06.2	06.7	06.9	06.23
25	**07.1**	07.2	07.2	07.5	08.0	08.4	09.2	09.8	10.5	11.1	11.5	11.7	12.3	12.8	13.0	13.2	13.5	13.7	14.4	14.5	14.7	15.3	15.4	**15.6**	11.57
26	16.1	15.9	**15.8**	16.0	16.1	16.6	16.9	17.7	17.9	17.9	18.0	18.0	18.2	18.2	18.2	17.7	17.6	17.7	18.0	18.3	18.5	18.6	**18.8**	18.8	17.56
27	**18.8**	18.7	18.7	18.6	18.4	18.2	18.2	18.1	18.0	17.8	17.6	16.9	16.1	15.2	14.7	13.9	13.1	13.0	12.6	12.5	12.3	11.8	11.1	**10.8**	15.63
28	**10.1**	09.9	09.2	08.9	08.2	07.8	07.7	**07.2**	07.4	07.8	08.3	08.1	07.9	07.9	07.6	07.6	07.4	07.4	07.5	07.3	07.4	07.7	07.7	07.6	07.98
29	07.6	07.5	07.4	07.4	07.4	07.4	07.4	07.9	07.9	07.9	07.8	07.7	07.4	07.2	07.2	**07.2**	07.2	07.2	07.3	07.6	07.8	**08.1**	08.1	08.0	07.57
30	**07.6**	07.3	06.9	06.7	06.3	06.1	05.7	05.3	04.7	04.5	04.3	03.6	02.9	02.6	01.9	01.4	00.6	00.4	99.8	99.6	99.4	98.6	98.2	**97.7**	03.00
31	96.7	95.8	95.4	94.7	94.5	**94.3**	94.5	94.6	94.5	94.6	95.0	95.6	95.9	96.8	97.6	97.8	98.5	98.9	00.2	00.9	01.5	01.9	**02.4**	02.4	97.29
M.	10.51	10.44	10.39	10.30	10.32	10.41	10.54	10.70	10.78	**10.80**	10.79	10.60	10.41	10.13	09.92	09.75	**09.70**	09.71	09.93	10.05	10.26	10.36	10.40	10.45	10.32

April.

Datum	1a	2a	3a	4a	5a	6a	7a	8a	9a	10a	11a	MT	1p	2p	3p	4p	5p	6p	7p	8p	9p	10p	11p	MN	Mittel
1	02.6	02.3	02.1	02.0	01.6	00.9	00.9	00.2	99.0	97.7	96.1	95.7	95.1	**95.1**	95.3	95.9	96.5	98.2	99.4	00.3	01.3	01.7	02.7	**03.2**	99.41
2	04.0	04.2	04.5	04.7	04.8	05.0	05.0	**05.1**	05.0	04.8	04.0	03.2	02.9	02.3	01.7	00.8	00.1	99.9	99.3	98.7	97.8	97.5	96.7	**95.9**	02.00
3	95.7	**95.6**	95.6	95.7	96.2	96.6	96.9	97.3	97.6	97.8	98.5	99.2	99.8	00.5	00.7	01.5	01.9	03.1	04.0	05.0	05.6	06.1	07.0	**07.3**	00.22
4	**07.5**	08.0	08.1	08.3	09.0	09.3	10.0	10.6	11.2	11.5	11.9	12.1	12.3	12.7	13.2	13.4	13.3	13.9	14.6	15.0	15.0	15.2	15.5	**15.7**	11.97
5	**15.9**	16.1	16.1	16.3	16.4	17.0	17.4	18.2	18.3	18.5	18.4	18.3	18.2	18.1	18.2	18.3	18.3	18.4	18.5	18.5	18.6	18.7	**18.8**	18.8	17.85
6	19.0	19.2	19.2	19.1	19.1	19.2	19.2	19.3	19.2	19.1	18.9	18.6	18.3	18.1	18.0	**18.0**	18.0	18.1	18.2	18.5	19.0	19.1	19.3	**19.4**	18.80
7	19.4	19.5	19.5	19.8	19.8	20.1	20.2	20.3	**20.4**	20.4	20.3	20.4	20.4	19.9	19.6	19.4	19.2	**19.0**	19.0	19.2	19.4	19.4	19.5	19.7	19.74
8	19.8	19.9	20.2	20.2	20.3	20.4	20.7	20.9	**20.9**	20.9	20.8	20.7	20.5	19.9	19.7	19.2	18.8	18.7	**18.5**	18.5	18.6	18.6	18.7	18.7	19.75
9	18.8	18.9	18.9	18.8	18.7	18.7	18.9	**19.1**	18.9	18.8	18.7	18.4	18.1	17.8	17.7	17.4	**17.1**	17.1	17.2	17.6	17.8	18.1	18.2	18.4	18.25
10	**18.6**	18.6	18.8	18.9	18.9	19.6	19.7	20.6	20.8	21.0	21.0	21.0	21.0	21.1	21.0	20.7	20.8	20.8	21.1	21.7	22.4	22.7	22.8	**23.3**	20.70
11	23.7	23.8	23.9	23.9	24.0	24.6	24.8	25.0	**25.1**	24.9	24.8	24.5	23.8	23.4	23.0	22.7	22.5	22.4	**22.1**	22.4	22.5	22.4	22.3	22.2	23.53
12	**22.0**	21.8	21.7	21.5	21.3	21.1	20.9	20.9	20.5	20.3	19.6	19.2	18.5	17.9	17.2	16.6	16.1	15.7	15.5	15.4	15.3	15.0	14.7	**14.5**	18.47
13	**14.3**	14.1	13.3	13.1	12.9	12.5	12.2	11.8	11.3	11.0	10.4	09.9	09.1	08.0	07.2	06.8	06.4	06.1	05.7	05.7	05.7	05.7	**05.6**	05.7	09.35
14	05.6	05.7	05.6	05.8	05.9	05.9	05.9	05.8	05.9	**06.0**	05.8	05.4	05.2	05.2	05.1	04.7	04.6	04.8	04.7	04.7	04.5	03.7	03.6	**03.3**	05.14
15	**02.8**	02.6	01.9	01.7	01.4	01.1	00.8	00.2	99.7	99.6	99.0	98.5	97.7	96.7	95.9	95.0	93.7	92.7	90.8	89.9	88.8	88.0	87.6	**87.0**	96.38
16	86.7	86.6	86.2	86.0	**85.8**	85.9	86.2	86.3	86.7	86.8	86.8	87.2	87.7	88.2	88.7	89.0	89.1	89.2	89.9	90.2	90.4	90.9	91.1	**91.2**	88.03
17	**91.4**	91.5	91.6	91.7	92.2	92.6	93.3	93.6	93.8	94.1	94.1	94.1	94.3	94.9	94.8	94.4	94.4	94.4	94.5	94.6	95.0	95.3	95.4	**95.6**	93.82
18	**95.8**	95.9	96.5	96.7	97.0	97.6	97.8	98.5	98.8	99.0	99.3	99.0	99.3	99.7	99.7	99.7	99.7	99.8	00.0	00.7	00.9	01.1	01.4	**01.9**	98.99
19	**02.1**	02.3	02.7	03.0	03.4	04.2	04.6	05.4	06.0	06.1	06.2	06.3	06.4	06.5	06.8	06.9	07.1	07.3	07.9	08.5	09.3	09.9	10.4	**11.2**	06.27
20	11.4	12.0	12.2	12.5	12.9	13.3	13.7	**13.9**	13.7	13.6	13.3	12.7	12.3	11.7	11.2	10.5	10.3	10.0	09.9	09.9	10.2	09.9	**09.7**	09.7	11.69
21	**09.8**	10.3	10.6	11.4	11.6	12.3	12.8	13.7	14.5	14.8	14.9	14.9	14.8	14.8	14.6	14.3	14.2	14.2	14.4	14.8	15.1	**15.3**	15.2	15.1	13.68
22	**14.7**	14.3	14.0	13.9	13.8	13.6	13.4	12.7	12.2	11.9	11.1	10.5	09.7	09.7	09.7	08.9	08.9	08.9	08.0	07.8	07.2	06.8	06.0	**05.3**	10.54
23	**04.4**	03.2	02.0	01.0	00.2	99.0	98.6	97.4	96.8	96.3	96.3	96.1	96.1	96.1	96.0	95.9	**95.6**	95.7	96.3	96.4	96.5	96.5	96.6	96.6	97.73
24	96.6	96.4	96.5	**96.4**	96.4	96.6	96.8	97.2	97.3	97.3	97.4	97.5	97.6	97.6	97.8	98.7	99.0	99.6	99.8	99.9	00.0	00.1	**00.4**	00.3	98.05
25	00.2	00.0	00.0	00.0	00.0	00.0	00.2	00.4	00.1	00.1	00.1	00.0	99.9	**99.7**	99.8	99.7	99.8	99.8	00.0	00.1	00.2	00.4	00.4	**00.7**	00.07
26	**00.8**	00.8	01.0	01.2	01.8	02.2	02.7	03.1	03.2	03.4	03.9	04.0	03.9	04.0	04.1	04.0	04.0	04.0	04.3	05.0	05.2	05.5	05.6	**05.7**	03.48
27	05.9	**05.7**	05.9	06.3	06.3	06.5	06.7	06.7	06.5	06.4	06.3	06.2	06.2	06.2	06.2	06.1	06.2	06.3	06.4	06.6	07.5	07.8	08.2	**08.7**	06.58
28	08.9	08.9	08.9	08.9	08.9	08.9	09.0	09.5	09.5	09.3	09.0	08.9	08.6	08.2	08.0	07.9	07.8	**07.7**	07.9	08.7	09.0	09.5	10.1	**10.7**	08.86
29	10.9	11.1	11.3	11.4	11.9	12.1	12.3	13.0	**13.1**	13.1	13.0	12.9	12.8	12.1	12.0	11.7	11.1	10.9	10.7	10.6	10.5	10.0	10.0	**09.8**	11.60
30	**09.7**	09.6	09.1	08.9	08.5	08.1	08.0	07.5	07.1	06.9	06.2	06.1	06.0	05.8	05.7	05.8	**05.7**	05.8	06.5	06.5	06.6	06.9	07.0	06.7	07.11
M.	07.97	07.96	07.93	07.97	08.03	08.16	08.32	**08.47**	08.44	08.38	08.20	08.05	07.88	07.73	07.62	07.48	**07.34**	07.42	07.50	07.71	07.86	07.93	08.02	08.08	07.94

$H = 22\,m$, $H_b = 24.9\,m$ $\varphi = 59^0\ 55'$ N

$C_g = 1.35$ mb bei 1009 mb $\lambda = 10^0\ 43'$ E

Mai.

900 oder 1000 mb +

Datum	1a	2a	3a	4a	5a	6a	7a	8a	9a	10a	11a	MT	1p	2p	3p	4p	5p	6p	7p	8p	9p	10p	11p	MN	Mittel
1	06.7	06.7	06.6	06.5	06.4	06.4	06.4	06.5	06.6	06.8	06.6	06.5	06.4	06.1	**06.1**	06.2	06.3	06.5	07.1	07.7	08.5	08.7	09.0	**09.5**	06.95
2	09.6	00.8	09.9	09.9	09.9	09.9	09.9	10.1	**10.2**	10.2	09.8	09.4	09.8	09.7	09.3	08.8	08.4	08.7	07.2	07.0	06.8	06.7	06.4	**05.9**	08.89
3	05.8	05.5	05.5	05.5	05.5	05.4	05.4	05.1	**05.0**	05.1	05.6	05.6	05.8	06.3	06.6	06.6	06.8	07.0	07.7	08.0	08.5	09.0	09.5	**10.1**	06.54
4	**10.3**	10.5	11.5	11.8	12.3	12.7	13.4	13.7	14.2	14.3	14.4	14.5	14.4	14.4	14.5	14.5	14.5	14.7	14.9	15.6	15.9	16.1	16.6	**16.8**	14.02
5	16.9	16.9	16.9	17.0	17.0	17.2	17.4	17.8	**17.9**	17.6	17.2	16.9	16.8	16.6	16.3	16.0	15.8	15.7	**15.3**	15.5	15.6	15.7	15.7	15.8	16.56
6	15.8	15.8	15.7	15.7	15.7	15.9	16.0	**16.1**	16.1	15.8	15.6	15.0	14.9	14.6	13.9	13.9	13.2	**13.0**	13.1	13.5	13.9	14.0	14.1	14.0	14.80
7	**14.0**	13.8	13.3	13.1	13.0	12.9	12.8	12.2	12.1	11.9	11.3	11.0	10.9	10.5	10.1	09.9	09.4	09.0	**09.0**	09.0	09.0	09.2	09.1	09.1	11.07
8	**09.2**	09.3	09.3	09.3	09.3	09.4	09.4	09.6	10.1	10.0	09.9	09.7	09.9	10.1	10.2	10.1	10.2	10.2	10.1	10.1	10.2	10.4	10.8	**11.0**	09.91
9	11.1	10.9	10.7	10.7	10.8	10.5	10.7	11.0	11.2	11.2	11.4	11.4	10.7	10.8	10.7	10.6	10.2	10.6	09.4	**09.3**	09.3	10.0	10.1	10.4	10.57
10	**10.5**	10.7	11.0	11.0	11.6	11.7	12.0	13.0	13.2	13.7	13.7	13.8	13.8	14.0	14.0	13.8	13.7	13.5	13.8	14.0	14.1	**14.3**	14.1	14.1	13.05
11	13.5	**13.6**	13.4	13.1	13.0	12.5	12.3	12.2	12.3	11.8	11.6	10.8	10.0	09.3	08.8	08.0	07.7	07.5	07.0	06.8	06.8	**06.8**	07.0	07.5	10.14
12	**08.0**	08.3	09.0	09.4	09.8	10.2	10.3	10.4	10.4	10.5	11.0	11.3	11.4	11.7	12.2	12.2	12.5	12.8	13.3	13.5	13.8	14.3	**14.5**	14.5	11.47
13	14.6	**14.5**	14.6	14.6	14.8	14.8	14.8	15.4	15.5	15.4	15.0	14.8	15.0	15.0	15.0	14.8	14.6	14.7	15.3	15.9	16.4	17.0	17.7	**17.9**	15.34
14	18.7	18.6	19.0	19.0	19.2	19.5	19.9	19.6	19.7	19.5	19.3	19.3	19.3	19.1	19.0	18.7	**18.3**	18.3	18.6	19.0	19.2	19.9	20.1	**20.3**	19.21
15	20.3	20.8	20.9	21.1	21.2	21.4	21.5	**22.0**	21.7	21.2	21.0	20.4	20.0	19.3	18.9	18.3	18.0	17.7	17.4	**17.2**	17.3	17.5	17.5	17.4	19.58
16	17.6	17.6	17.6	17.6	17.8	**18.0**	17.9	17.6	17.4	17.3	17.2	16.9	16.4	16.1	16.1	16.0	15.9	15.7	15.4	**15.3**	15.4	15.7	16.2	16.4	16.71
17	**16.8**	17.0	17.0	17.3	17.4	17.7	18.2	18.7	19.0	18.9	18.9	19.0	19.1	19.1	19.1	18.9	18.8	18.9	18.9	19.1	19.2	19.5	20.1	**20.6**	18.63
18	**21.1**	21.5	21.9	22.5	22.7	22.7	23.0	**23.2**	23.1	22.9	22.8	22.6	22.4	21.9	21.6	21.3	21.1	21.1	21.3	21.4	21.7	21.9	22.1	22.4	22.09
19	22.7	23.0	23.2	23.2	23.2	**23.3**	23.3	23.2	23.1	23.0	22.4	22.0	21.4	20.8	20.2	20.0	19.6	19.1	18.5	18.5	18.7	18.6	18.5	**18.3**	21.16
20	**18.2**	18.1	18.0	17.8	17.3	17.1	16.5	15.6	15.1	14.2	13.3	12.4	11.5	10.0	09.1	08.2	07.5	06.9	06.1	05.7	05.7	05.7	05.7	**05.6**	11.72
21	**05.1**	05.1	05.5	05.9	06.6	07.0	07.7	**08.0**	07.9	07.8	07.7	07.2	07.0	06.7	06.2	06.0	05.9	05.8	05.8	05.9	06.1	06.4	06.4	06.4	06.50
22	**06.2**	06.0	05.8	05.5	05.4	05.2	05.2	05.0	04.6	04.3	03.7	03.3	03.1	02.7	02.2	01.5	01.0	00.7	**00.7**	00.8	01.3	01.4	01.7	01.9	03.30
23	**02.2**	02.3	02.9	03.0	03.2	03.5	03.6	04.1	04.4	04.5	04.6	04.7	04.8	05.2	05.2	05.2	04.9	05.2	05.3	05.8	06.1	06.3	06.7	**07.0**	04.61
24	**07.2**	07.2	07.8	08.0	08.2	08.4	08.9	09.2	09.5	10.1	10.2	**10.3**	10.3	10.3	10.4	10.4	10.3	10.4	**10.5**	10.5	10.3	10.4	10.2	09.9	09.54
25	**09.6**	09.4	09.2	09.2	09.0	09.1	09.1	08.9	08.9	08.8	08.7	08.7	08.6	08.1	07.8	07.8	07.8	07.7	**07.4**	07.4	07.5	07.5	07.5	07.4	08.38
26	07.2	07.1	07.0	**06.9**	06.9	06.9	07.1	07.4	07.4	07.5	07.6	07.7	07.8	**08.2**	08.1	08.1	08.1	07.9	07.9	07.9	08.0	08.0	07.8	07.5	07.58
27	**07.3**	07.3	07.3	07.3	07.2	07.0	06.9	06.8	06.8	06.7	06.4	06.3	06.1	05.7	05.2	04.8	04.2	03.6	03.1	02.6	02.0	02.1	01.3	**01.1**	05.21
28	**00.8**	00.2	99.7	99.4	99.2	99.2	99.2	**99.0**	99.0	99.2	99.4	99.6	99.8	99.5	99.6	99.7	99.7	99.9	00.0	99.9	00.0	99.9	00.4	00.7	99.71
29	**01.2**	01.4	01.5	01.6	01.9	01.9	02.2	02.4	02.5	02.3	02.1	01.9	01.8	01.7	01.5	01.5	01.6	01.7	02.4	02.8	02.5	**03.9**	03.9	03.9	02.17
30	04.4	04.5	04.8	04.9	**05.0**	05.0	04.8	04.7	04.7	04.0	03.8	03.8	03.1	02.3	01.7	01.6	01.2	01.1	01.3	01.5	**00.9**	01.1	01.1	01.3	03.02
31	02.5	02.6	02.7	02.3	02.0	02.0	02.0	**02.0**	02.2	02.3	02.3	02.3	02.3	02.7	02.6	02.7	02.7	03.4	03.8	04.3	04.8	05.6	06.3	**06.7**	03.13
M.	10.81	10.84	10.94	10.97	11.05	11.11	11.22	11.31	**11.35**	11.25	11.11	10.94	10.79	10.60	10.39	10.20	10.00	09.97	**09.92**	10.05	10.18	10.44	10.58	10.69	10.70

Juni.

Datum	1a	2a	3a	4a	5a	6a	7a	8a	9a	10a	11a	MT	1p	2p	3p	4p	5p	6p	7p	8p	9p	10p	11p	MN	Mittel
1	**06.9**	07.5	07.9	08.5	09.0	09.3	09.9	10.1	10.7	10.5	10.6	10.5	10.5	10.6	10.7	10.7	10.7	10.6	10.7	10.8	11.2	11.4	11.4	**11.6**	10.10
2	**11.7**	11.7	11.8	12.0	12.2	12.5	12.6	12.9	**13.0**	13.0	12.9	12.8	12.8	12.5	12.2	12.1	12.2	12.1	12.3	12.5	12.8	12.6	12.4	12.3	12.41
3	12.1	12.0	12.0	12.0	11.8	11.8	11.8	11.8	11.6	11.1	11.1	11.0	10.8	10.3	10.0	09.7	**09.6**	09.8	10.0	10.3	10.7	11.4	12.3	**12.7**	11.15
4	**13.3**	13.7	14.3	14.8	15.5	15.9	16.5	16.7	17.0	17.1	17.1	17.2	17.4	17.2	17.2	17.1	17.3	17.3	17.8	18.1	18.8	19.0	19.7	**19.9**	16.91
5	20.2	20.3	20.6	20.8	20.8	20.9	20.9	**21.1**	21.1	20.8	20.7	20.4	19.9	19.4	19.1	19.1	**19.1**	19.1	19.3	19.5	19.8	20.0	20.1	20.1	20.13
6	20.2	20.4	20.7	20.8	20.9	21.1	21.2	21.6	21.9	21.9	**22.0**	21.9	21.6	21.5	21.1	20.8	20.0	19.9	19.7	**19.5**	19.6	19.7	19.7	19.7	20.72
7	**19.8**	19.9	19.9	20.3	20.7	21.0	21.1	21.3	21.4	21.3	21.3	21.2	21.2	21.2	21.3	21.1	20.8	20.8	20.7	21.0	21.7	22.0	22.5	**22.6**	21.09
8	22.9	22.9	23.5	23.6	23.7	23.9	24.0	24.2	23.7	23.7	23.6	23.0	22.8	22.7	22.7	22.7	22.5	22.5	**22.2**	22.3	22.6	23.1	24.0	**24.4**	23.22
9	24.7	24.9	25.0	25.1	25.3	25.6	**25.7**	25.5	25.2	24.8	24.6	23.9	23.6	22.8	22.4	21.8	21.5	20.9	**20.7**	20.8	21.0	21.6	21.7	21.7	23.37
10	21.9	22.1	22.2	**22.5**	22.4	21.9	21.9	21.8	21.7	21.1	20.7	19.9	19.5	19.3	18.6	18.0	17.7	17.5	17.0	**16.9**	17.4	17.5	17.6	17.5	19.78
11	**17.7**	17.5	17.2	17.3	17.4	16.8	16.5	15.9	15.0	14.6	13.8	12.9	12.5	11.4	10.8	10.7	10.7	10.4	10.3	**10.2**	10.3	10.9	11.3	11.3	13.48
12	11.2	11.2	11.2	11.2	11.8	11.6	**12.0**	11.8	11.6	11.0	10.5	09.5	08.7	07.9	07.5	07.0	06.7	06.6	06.5	**06.4**	06.8	06.9	06.9	07.0	09.16
13	07.0	07.0	**07.1**	06.9	06.7	06.4	06.0	05.4	04.7	03.8	02.8	02.2	01.4	99.9	98.9	97.6	96.6	95.2	94.5	93.6	92.7	92.5	91.4	**90.7**	00.46
14	**90.8**	91.2	91.3	91.4	91.6	92.0	92.5	92.7	92.8	92.8	92.6	92.8	93.2	94.0	94.3	95.0	95.2	95.7	96.3	97.5	98.7	99.6	00.2	**00.9**	94.38
15	01.5	01.7	02.3	02.7	03.0	03.5	03.8	**04.0**	03.5	03.1	02.6	02.2	02.1	01.6	01.4	01.2	**01.2**	01.6	01.5	01.5	01.5	01.6	01.7	01.5	02.18
16	**01.3**	01.1	01.0	00.9	00.3	00.2	00.1	99.2	98.4	97.8	97.3	96.5	95.9	95.1	94.4	93.2	91.8	90.9	90.4	90.3	90.1	90.0	89.7	**89.5**	95.64
17	89.3	**88.8**	88.8	89.1	89.7	91.0	91.3	91.8	91.9	91.7	92.1	**92.3**	92.2	92.1	92.1	91.8	91.6	91.5	91.2	91.0	91.3	90.8	90.6	90.6	91.02
18	90.3	90.2	89.8	89.6	89.5	89.5	89.5	89.3	89.2	**89.2**	90.3	90.8	91.4	92.0	92.5	93.1	94.6	95.5	97.0	98.2	99.1	00.1	01.0	**01.3**	93.04
19	**01.8**	02.0	02.1	02.4	02.4	02.6	03.0	03.4	03.5	**03.5**	03.5	03.4	03.3	03.1	03.0	02.8	02.5	02.3	02.2	02.0	01.9	02.2	02.3	02.4	02.65
20	02.4	02.4	**02.5**	02.4	02.3	02.2	02.1	01.9	02.0	01.6	01.4	01.3	00.6	00.0	99.4	98.8	98.6	98.6	98.2	97.8	97.5	97.2	**96.7**	96.7	00.19
21	96.5	96.5	**96.4**	96.4	96.5	96.5	97.0	97.7	98.2	98.5	99.3	99.7	00.4	01.1	01.6	01.7	01.9	02.6	02.9	03.5	04.4	05.2	06.0	**06.7**	00.30
22	**06.9**	07.1	07.5	07.7	08.0	08.2	09.0	09.2	10.0	09.8	10.0	09.9	10.0	09.7	09.4	09.4	09.5	09.5	09.7	10.5	11.0	12.2	**12.3**	12.3	09.53
23	12.1	12.2	12.3	12.2	12.1	12.1	12.1	12.1	11.8	11.8	12.2	12.5	**12.7**	12.2	12.0	12.1	11.8	**11.7**	11.8	11.9	12.3	12.1	12.0	12.0	12.09
24	**12.1**	12.0	11.8	11.9	11.9	11.8	11.6	11.2	11.2	10.8	10.0	09.5	08.7	07.2	06.5	05.7	05.4	05.0	05.0	**04.9**	05.0	05.0	05.5	05.9	08.57
25	06.1	06.3	**06.7**	06.5	06.4	06.1	05.8	05.3	05.0	04.5	04.1	03.9	03.4	02.5	02.0	01.1	00.7	00.2	**00.2**	00.2	00.4	00.4	00.3	00.2	03.26
26	00.2	00.3	00.3	00.3	00.6	00.9	01.1	01.3	01.3	01.2	01.1	01.1	00.9	00.6	00.4	00.3	**00.2**	00.2	00.4	00.8	01.3	02.2	02.7	**03.0**	00.95
27	**03.4**	04.0	04.5	05.1	05.6	06.4	07.1	07.8	08.1	08.2	08.1	08.3	08.4	08.2	08.2	08.1	08.1	08.3	08.3	08.4	08.8	09.5	10.4	**10.7**	07.58
28	11.4	11.6	12.0	12.0	12.0	12.5	12.7	**13.1**	13.1	13.0	12.8	12.3	12.1	11.4	11.1	**11.0**	11.1	11.2	11.4	11.7	12.0	12.3	12.8	13.1	12.07
29	**13.4**	13.9	14.0	14.3	14.3	14.6	15.0	15.4	16.3	16.3	16.2	15.9	15.8	15.5	15.4	15.4	15.5	15.5	15.9	16.1	16.4	16.9	17.1	**17.4**	15.52
30	**17.5**	17.8	18.3	18.5	18.5	18.5	18.7	19.0	**19.1**	19.0	18.6	18.5	18.4	18.4	18.3	18.2	18.2	18.0	18.0	18.1	18.3	18.5	18.7	19.1	18.42
M.	08.89	09.01	09.17	09.31	09.43	09.59	09.75	**09.82**	09.80	09.58	09.46	09.24	09.07	08.71	08.48	08.24	08.11	**08.03**	08.07	08.21	08.51	08.81	09.03	09.16	08.98

$H = 22\,m$, $H_b = 24.9\,m$ $\varphi = 59^0\ 55'$ N

$C_g = 1.35$ mb bei 1009 mb **Juli.** $\lambda = 10^0\ 43'$ E

Datum	1a	2a	3a	4a	5a	6a	7a	8a	9a	10a	11a	MT	1p	2p	3p	4p	5p	6p	7p	8p	9p	10p	11p	MN	Mittel
	900 oder 1000 mb +																								
1	19.4	19.5	19.6	19.5	19.6	19.7	19.8	**20.1**	19.9	19.7	19.4	19.1	18.6	18.3	17.8	17.7	17.3	17.2	**17.0**	17.1	17.3	17.7	18.0	18.9	18.68
2	19.1	19.5	19.7	19.9	20.2	**20.5**	20.3	20.1	19.7	19.1	18.6	17.9	17.4	16.6	16.1	15.5	**15.1**	15.1	15.2	15.2	15.5	16.1	16.5	16.9	17.74
3	17.2	17.3	**17.4**	17.3	16.9	16.4	16.2	15.8	15.5	15.0	14.6	14.0	13.3	12.8	12.3	**12.2**	12.2	12.4	12.9	13.8	14.2	14.2	14.2	14.1	14.68
4	**13.5**	13.5	13.3	13.2	12.9	12.5	12.2	11.3	11.6	11.6	11.4	11.4	11.3	11.2	11.1	11.1	**11.0**	11.0	11.0	11.1	11.1	11.2	11.3	11.3	11.75
5	**11.4**	11.3	11.3	11.3	11.2	11.1	10.9	10.6	10.5	10.3	09.4	09.1	08.4	07.9	07.3	07.1	06.8	06.3	06.1	06.0	06.1	06.1	06.0	**05.9**	08.68
6	05.8	05.7	05.6	05.3	05.2	05.2	05.1	05.1	04.9	04.9	04.9	**04.2**	04.5	04.9	05.0	05.0	05.0	04.8	05.0	05.0	05.4	05.4	05.6	**06.0**	05.15
7	06.0	06.0	06.2	06.4	06.5	06.4	06.5	**06.8**	06.8	06.8	06.4	06.3	06.3	06.3	05.9	**05.8**	05.9	06.0	05.9	05.8	06.1	06.1	06.0	05.8	06.21
8	**05.5**	05.3	05.1	04.7	04.6	04.5	04.3	03.8	03.6	03.5	03.4	03.0	02.6	**02.5**	02.5	02.8	03.0	03.1	03.0	03.0	03.4	03.7	03.7	03.7	03.68
9	03.7	03.6	03.7	03.7	03.8	03.9	04.3	**04.4**	04.4	04.1	03.7	03.7	03.6	03.0	02.9	02.8	02.8	02.8	**02.6**	02.8	03.2	03.6	03.8	03.9	03.53
10	04.1	04.2	04.2	03.9	03.7	03.4	03.2	03.3	03.0	02.7	02.6	02.1	02.0	01.8	01.7	01.7	**01.6**	01.8	02.2	02.9	03.4	04.1	04.8	**04.9**	03.05
11	**05.6**	05.9	06.4	07.0	07.2	07.8	08.2	08.7	08.9	09.2	09.2	09.2	09.3	09.7	10.0	10.2	10.4	10.9	11.4	12.1	12.7	13.4	13.6	**14.2**	09.63
12	**14.6**	15.3	15.5	16.1	16.5	16.5	16.6	17.1	17.5	17.5	17.6	17.4	17.4	17.3	17.3	17.4	17.2	17.3	17.7	18.2	18.5	19.1	19.3	**19.5**	17.27
13	**20.0**	20.4	20.7	21.1	21.3	21.4	21.5	21.6	21.7	21.7	21.6	21.4	21.1	20.8	20.8	20.8	20.8	20.8	20.9	21.0	21.1	21.6	21.8	**21.9**	21.16
14	21.8	21.8	**21.9**	21.9	21.9	21.9	21.7	21.5	21.4	21.0	20.8	20.5	20.1	19.9	19.8	19.5	19.1	18.8	**18.8**	18.8	18.9	19.0	19.1	19.2	20.38
15	**19.2**	19.2	19.2	19.2	19.1	19.0	19.0	19.0	19.0	18.5	18.2	17.7	17.3	16.8	16.5	16.1	15.9	**15.6**	15.8	15.9	16.1	16.2	16.3	16.3	17.55
16	**16.4**	16.4	16.4	16.4	16.4	16.2	16.1	16.0	15.6	15.4	15.2	14.6	14.4	14.1	13.6	13.4	13.2	13.1	**12.6**	12.7	12.8	12.9	13.4	13.5	14.62
17	**13.7**	13.6	13.6	13.6	13.6	13.3	13.1	13.0	12.8	12.7	12.3	11.9	11.6	10.9	10.6	10.1	09.8	09.6	**09.2**	09.4	09.6	10.0	10.2	10.8	11.62
18	10.9	10.9	11.0	11.1	11.1	10.9	11.1	11.2	11.2	11.3	11.9	11.9	11.5	11.3	11.2	11.1	11.0	**10.9**	10.9	11.1	11.4	12.0	12.2	**12.4**	11.31
19	**12.9**	13.1	13.3	13.3	13.3	13.3	13.3	13.8	14.0	14.0	13.8	13.9	13.9	13.9	14.3	14.2	14.2	14.2	13.9	14.5	15.1	15.6	16.2	**16.5**	14.10
20	**16.7**	16.9	17.3	17.6	17.6	17.6	17.6	17.9	18.3	18.3	18.3	18.0	17.8	17.5	17.3	17.0	16.9	16.9	17.1	17.8	18.1	18.7	19.0	**19.5**	17.74
21	19.8	20.0	20.2	20.6	21.0	21.0	21.0	21.1	**21.3**	21.2	21.0	20.9	20.7	20.3	20.1	19.9	19.7	**19.6**	19.6	19.9	20.0	20.5	20.8	20.9	20.46
22	21.3	21.3	21.6	21.7	21.8	21.8	21.8	**22.0**	22.0	21.9	21.5	21.1	20.7	20.3	20.0	19.8	19.3	19.3	18.9	18.7	19.2	19.3	19.4	19.4	20.59
23	**19.3**	19.3	19.3	19.3	19.2	19.0	18.9	18.9	18.5	18.3	17.9	17.4	17.2	16.6	16.2	16.0	15.4	**15.3**	15.3	15.4	15.7	16.3	16.4	16.4	17.40
24	**16.5**	16.5	16.5	16.5	16.4	16.2	16.0	15.9	15.9	15.4	15.3	14.9	14.5	14.4	14.2	13.8	13.6	13.5	**13.1**	13.2	13.3	13.5	13.4	13.5	14.83
25	13.8	13.8	13.9	13.9	**14.2**	13.8	13.8	13.6	13.4	12.8	12.5	12.3	11.4	11.2	11.5	10.7	10.3	09.6	**09.4**	09.4	09.5	09.5	09.5	09.5	11.80
26	**09.5**	09.5	09.3	08.9	08.9	08.7	08.5	08.2	07.7	07.4	06.7	05.8	05.6	04.3	03.9	04.8	05.7	05.0	04.3	04.8	05.2	04.5	04.2	**03.8**	06.47
27	**02.7**	02.6	02.5	02.5	02.4	02.4	02.4	02.3	02.5	02.3	01.9	01.3	01.3	00.9	00.5	99.9	99.6	99.1	99.6	99.8	**00.0**	00.0	00.0	00.1	01.19
28	00.2	00.2	00.1	99.9	00.0	99.5	99.8	99.9	99.8	99.8	99.7	99.8	99.7	**99.5**	99.5	99.6	99.7	99.7	99.6	99.7	00.1	00.3	00.4	**00.5**	99.88
29	**00.3**	00.1	00.0	99.8	99.6	99.5	99.4	99.0	98.6	98.4	97.8	98.3	98.6	98.0	97.6	97.4	**97.2**	97.4	97.5	97.7	97.9	98.1	98.1	98.2	98.52
30	**98.3**	98.0	98.2	98.0	97.9	97.8	97.8	97.6	97.5	97.3	96.9	96.7	96.5	96.4	96.2	96.2	**95.9**	95.9	96.1	96.2	96.9	96.7	96.4	96.6	97.00
31	**96.2**	95.9	95.9	95.9	95.9	95.8	95.8	95.7	95.7	95.7	95.3	95.2	95.1	95.3	95.2	95.0	**94.8**	94.9	94.9	95.0	95.0	95.0	95.1	95.0	95.39
M.	11.46	11.50	11.58	11.60	**11.61**	11.52	11.49	11.46	11.39	11.22	10.96	10.68	10.44	10.15	09.96	09.83	09.69	09.61	**09.60**	09.81	10.09	10.34	10.47	10.62	10.71

August.

Datum	1a	2a	3a	4a	5a	6a	7a	8a	9a	10a	11a	MT	1p	2p	3p	4p	5p	6p	7p	8p	9p	10p	11p	MN	Mittel
1	**94.9**	94.9	94.8	94.7	94.6	94.6	94.4	94.4	94.5	94.3	94.2	94.2	94.0	93.8	**93.8**	93.8	93.9	93.8	93.8	94.0	94.3	94.4	94.5	94.5	94.30
2	94.4	94.4	**94.3**	94.3	94.4	94.3	94.4	94.4	94.3	94.4	94.7	94.9	95.2	95.7	95.9	96.2	96.5	96.6	97.0	97.6	98.0	98.6	98.8	**98.9**	95.76
3	**99.0**	99.1	99.6	99.8	00.1	00.5	00.6	00.8	01.1	01.2	01.1	01.1	01.1	01.2	01.1	01.1	01.3	01.3	01.3	01.4	01.6	01.7	02.1	**02.3**	00.90
4	**02.2**	02.1	01.9	01.8	01.8	01.9	02.0	01.8	01.6	01.3	01.1	00.5	00.2	00.0	00.0	99.4	99.3	99.1	**99.0**	99.1	99.3	99.3	99.3	99.4	00.56
5	99.1	99.1	99.0	98.9	98.9	99.0	99.0	99.3	**99.4**	99.2	98.8	98.4	98.0	97.3	**97.2**	97.3	97.5	97.7	97.9	98.2	98.5	99.0	99.0	99.0	98.53
6	**99.1**	99.1	99.3	99.4	99.6	99.7	99.7	00.0	00.4	00.4	00.4	00.3	00.3	00.6	00.7	01.0	01.1	01.7	02.2	03.0	03.8	04.4	04.6	**04.7**	01.06
7	**05.0**	05.4	05.8	06.0	06.5	06.9	06.9	07.2	07.3	07.4	07.4	07.4	07.4	07.4	07.4	07.4	07.6	08.1	08.2	08.7	09.1	09.3	09.8	**10.1**	07.49
8	**10.1**	10.7	10.8	10.9	10.9	11.2	11.6	11.9	11.9	12.2	12.2	12.2	12.2	12.0	11.6	11.5	11.5	11.6	11.6	11.8	12.2	12.4	**12.5**	12.5	11.67
9	12.3	12.2	12.2	12.3	12.4	12.4	12.5	12.7	13.0	12.8	**13.1**	13.0	12.9	12.8	12.6	12.5	12.5	12.2	12.2	12.4	12.3	12.1	11.5	**11.3**	12.42
10	**10.9**	10.2	10.0	09.2	08.7	08.2	07.9	07.2	06.7	06.5	06.4	06.2	05.9	05.7	05.6	05.4	05.0	04.9	05.1	04.9	05.3	04.9	04.8	**04.7**	06.68
11	04.5	04.0	03.2	02.7	02.5	02.5	02.1	**01.2**	01.2	01.7	02.0	02.1	02.4	02.8	03.0	03.1	03.2	03.4	04.0	04.3	04.4	04.9	05.1	**05.9**	03.18
12	**06.3**	07.1	08.1	09.2	10.0	10.3	11.1	11.9	12.4	12.7	13.2	13.4	13.5	13.8	13.8	13.7	13.7	13.8	14.4	14.5	15.0	15.4	15.6	**15.8**	12.45
13	16.2	16.2	16.1	**16.3**	15.9	16.0	15.8	15.9	15.9	15.8	15.9	15.9	15.7	15.3	15.1	14.6	14.1	13.7	13.3	13.2	13.2	13.4	13.3	**13.0**	14.99
14	**12.8**	12.5	12.5	12.3	11.8	11.7	11.6	11.2	10.7	10.5	10.4	10.2	10.3	10.3	**09.9**	09.9	10.0	10.1	10.7	11.2	11.3	12.0	12.1	12.2	11.18
15	12.2	12.4	**12.6**	12.3	12.4	12.5	12.2	12.2	12.1	12.1	11.9	11.4	11.1	10.7	10.6	10.5	10.5	10.6	**10.4**	10.5	10.9	11.2	11.3	11.5	11.50
16	11.7	11.7	11.7	11.7	11.9	**12.0**	11.9	11.7	11.5	11.3	10.6	10.3	09.8	09.4	09.1	08.5	07.7	07.5	07.1	06.8	06.6	06.5	06.3	**06.0**	09.55
17	**05.7**	05.5	05.3	05.3	05.1	04.7	04.6	04.5	04.7	04.2	03.9	03.4	03.0	02.2	02.0	01.4	**01.3**	01.3	01.4	01.6	02.1	02.1	02.0	01.8	03.30
18	**01.4**	01.4	01.1	00.1	99.3	99.1	98.5	97.9	97.7	97.5	97.3	97.3	97.3	**97.2**	97.6	97.6	97.6	97.8	98.1	98.6	99.5	99.8	00.6	00.8	98.80
19	**01.6**	01.8	02.0	02.6	02.8	03.6	03.9	04.6	04.8	04.8	04.6	04.4	04.3	04.4	04.5	04.4	04.3	04.2	04.3	04.4	04.6	04.7	04.7	**04.9**	03.97
20	**05.0**	04.8	04.7	04.6	04.5	04.7	04.8	04.9	04.8	04.8	04.6	04.4	04.4	04.5	04.4	04.3	04.2	04.3	04.1	**04.0**	04.3	04.3	04.4	04.4	04.51
21	04.5	**04.4**	04.5	04.6	04.7	04.7	04.8	04.8	05.2	05.4	05.3	05.2	05.1	05.3	05.3	05.5	05.5	05.6	06.0	06.5	07.1	07.5	07.7	**07.9**	05.55
22	**08.4**	08.6	08.8	08.8	09.0	09.5	09.7	10.1	10.3	10.6	10.4	10.8	10.9	11.1	11.2	11.1	11.2	11.3	11.8	12.3	12.5	12.9	**13.0**	13.0	10.72
23	**13.0**	13.1	13.3	13.7	13.8	13.9	14.1	14.7	**15.1**	15.1	15.0	15.0	14.7	14.5	14.2	13.9	13.9	13.9	14.2	14.7	15.0	15.0	15.1	15.1	14.33
24	**14.9**	14.9	14.9	14.8	14.7	14.6	14.7	14.5	14.8	14.6	14.5	13.9	13.8	13.2	12.8	12.4	12.1	12.1	12.0	11.8	11.7	11.7	**11.6**	11.8	13.45
25	12.0	11.9	11.8	11.7	11.6	11.7	11.8	12.1	12.4	12.1	11.8	11.8	11.7	11.4	11.2	**11.0**	11.0	11.1	11.4	12.0	12.2	12.9	13.0	**13.4**	11.88
26	**13.7**	13.9	14.1	14.5	14.6	15.1	15.5	**15.6**	15.4	15.0	14.9	14.7	14.4	14.7	14.4	14.3	14.2	14.2	14.4	14.7	15.1	15.3	15.3	15.3	14.72
27	15.2	15.3	15.6	16.0	16.0	16.1	**16.2**	16.0	15.7	15.5	15.2	14.7	14.4	14.3	13.8	13.4	12.8	12.5	12.1	11.9	11.6	11.4	10.7	**10.2**	14.02
28	**09.8**	09.7	09.7	09.5	09.1	09.0	08.8	08.8	08.6	08.6	08.5	08.3	08.2	**08.1**	08.2	08.4	08.4	08.5	09.1	09.3	09.4	09.3	09.3	09.3	08.91
29	**08.8**	08.6	08.3	07.5	06.5	05.9	05.2	04.1	03.5	02.6	01.3	00.3	99.9	99.0	98.7	98.4	98.0	97.9	97.9	97.9	98.0	97.9	97.7	**97.5**	01.72
30	**97.3**	97.3	97.4	97.7	97.8	98.5	98.8	99.6	00.3	00.8	01.2	01.5	01.9	02.1	02.3	02.4	02.6	03.3	04.5	06.1	06.5	07.0	07.8	**08.3**	01.79
31	08.7	09.4	09.4	**09.5**	09.5	09.4	09.3	08.6	08.3	07.5	06.4	05.5	04.8	04.1	03.0	02.4	01.6	00.3	99.0	98.2	97.4	97.2	97.2	**96.4**	04.30
M.	06.80	06.83	06.86	06.86	06.82	06.91	06.92	06.92	**06.95**	06.87	06.72	06.54	06.41	06.29	06.16	06.03	**05.94**	05.95	06.08	06.31	06.54	06.73	06.80	06.84	06.59

$H = 22\,m$, $H_b = 24.9\,m$ $\varphi = 59^0\ 55'$ N

$C_g = 1.35$ mb bei 1009 mb $\lambda = 10^0\ 43'$ E

September.

Datum	1a	2a	3a	4a	5a	6a	7a	8a	9a	10a	11a	MT	1p	2p	3p	4p	5p	6p	7p	8p	9p	10p	11p	MN	Mittel
	900 oder 1000 mb +																								
1	95.9	95.6	95.2	95.1	95.0	94.9	94.8	94.1	93.8	93.4	93.1	92.5	91.9	91.6	91.0	90.6	90.3	90.0	89.7	89.5	89.5	89.5	89.7	89.4	92.34
2	89.2	88.5	88.1	87.6	87.7	87.5	87.3	87.0	86.7	86.2	85.9	85.8	85.5	85.1	84.6	84.4	84.4	84.4	84.7	84.8	85.2	85.7	85.8	85.9	86.17
3	86.0	86.1	86.2	86.2	86.2	86.4	86.3	86.8	86.7	86.5	86.5	86.4	86.4	86.2	85.7	85.6	85.7	85.8	86.3	86.4	86.6	87.3	87.4	87.5	86.38
4	87.6	87.6	87.6	87.7	87.7	87.7	87.7	87.6	87.6	87.6	87.5	87.3	87.1	87.0	87.0	87.0	87.0	87.0	86.7	86.5	86.2	86.0	86.0	85.9	87.11
5	85.8	85.7	85.7	85.7	85.7	85.8	86.0	86.3	86.5	86.7	86.9	86.9	87.3	87.7	88.1	88.6	89.1	89.3	89.8	90.2	90.3	90.8	90.9	91.0	87.78
6	91.1	91.2	91.4	91.4	91.6	91.9	92.1	92.2	92.2	92.1	92.1	92.0	92.0	92.1	92.2	92.4	92.3	92.2	92.5	92.7	92.8	93.2	93.5	93.7	92.20
7	94.0	94.3	94.7	94.8	95.0	95.1	95.4	95.9	96.3	96.4	96.3	96.5	96.6	96.6	96.6	96.7	97.0	97.5	97.9	98.5	98.7	99.0	99.1	99.6	96.60
8	99.7	99.9	00.0	00.1	00.5	00.7	00.8	00.9	01.0	00.8	00.6	00.7	00.6	00.5	00.3	00.6	00.3	00.5	00.7	00.9	01.0	01.4	01.7	01.9	00.67
9	02.0	02.1	02.2	02.3	02.5	03.0	03.2	03.5	03.6	04.1	03.9	03.8	03.6	03.8	04.1	04.2	04.2	04.3	04.4	04.5	04.7	05.1	05.2	05.3	03.73
10	05.4	05.4	05.6	05.6	05.6	05.6	05.8	06.3	06.7	06.9	06.9	06.8	06.5	06.2	06.2	06.3	06.1	06.4	06.7	07.1	07.4	07.6	07.9	08.1	06.46
11	08.2	08.5	08.6	08.8	08.9	09.1	09.6	09.8	10.0	10.5	10.6	10.3	10.2	10.1	10.1	10.1	10.2	10.7	11.2	11.9	12.2	12.9	13.4	13.5	10.39
12	14.0	14.1	14.2	14.2	14.3	14.8	15.1	15.5	15.7	15.7	15.3	15.2	15.0	14.9	14.6	14.8	14.8	15.0	15.3	15.9	16.0	16.5	17.0	17.1	15.21
13	17.3	17.4	17.6	18.0	18.4	18.9	19.3	19.8	20.0	20.1	19.9	19.8	19.7	19.3	18.8	18.6	18.5	18.7	19.2	19.4	19.4	19.4	19.4	19.5	19.02
14	19.5	19.7	19.7	19.6	19.6	19.6	19.5	19.5	19.8	19.5	19.3	18.7	18.5	17.7	17.3	17.1	16.8	16.6	16.7	16.7	16.8	16.9	17.0	17.1	18.30
15	17.5	17.8	17.9	17.8	17.9	18.2	18.7	19.0	19.1	19.0	18.8	18.7	18.5	18.2	17.9	17.8	17.5	17.6	17.8	18.0	18.1	18.2	18.5	18.3	18.20
16	18.2	18.1	18.0	17.8	17.7	17.7	17.7	17.4	17.3	16.6	16.1	15.8	15.6	15.0	14.6	14.2	13.9	13.9	14.0	13.9	13.9	13.9	14.0	14.1	15.81
17	14.2	14.1	13.9	13.8	13.8	13.8	13.9	14.0	14.0	14.0	14.0	13.7	13.5	13.5	13.4	13.2	13.0	13.0	13.0	13.0	13.0	13.2	13.3	13.3	13.57
18	13.2	13.1	13.0	13.0	12.8	12.8	12.9	13.0	12.9	12.8	12.5	12.3	12.1	11.5	11.1	10.5	10.3	10.2	10.1	10.1	10.0	09.7	09.5	09.5	11.62
19	09.5	09.5	09.3	09.2	09.1	09.1	09.1	09.2	09.2	09.2	09.2	09.2	09.2	09.1	09.1	08.9	08.6	08.4	08.4	08.3	07.9	07.5	06.9	06.1	08.72
20	05.0	04.3	03.4	03.0	02.0	01.3	00.4	99.2	97.5	96.7	96.4	96.8	96.8	96.8	97.4	97.7	98.3	98.8	99.8	00.5	01.0	01.8	02.0	[illegible]	99.95
21	01.7	01.6	00.7	99.8	99.0	98.4	97.8	97.5	97.3	97.0	96.2	95.6	94.9	93.5	91.9	90.3	89.1	88.3	87.6	87.3	88.1	90.2	90.9	91.2	94.41
22	92.0	92.1	92.1	92.1	91.9	92.0	92.2	92.8	93.3	94.2	94.6	95.2	95.6	96.0	96.5	96.6	96.8	97.1	97.2	97.5	97.8	97.8	97.7	97.5	94.94
23	96.6	95.8	94.5	93.2	92.1	90.3	88.8	86.4	86.4	86.3	86.0	86.0	85.8	85.5	85.1	85.3	85.4	85.7	86.5	87.4	87.8	88.5	89.3	89.8	88.52
24	90.3	91.2	91.8	92.5	93.1	93.7	94.7	95.9	96.2	97.0	97.4	98.0	98.2	98.6	99.0	99.4	99.7	00.5	01.4	01.7	02.0	02.6	02.9	03.6	97.56
25	03.8	03.9	03.9	04.1	04.6	04.9	05.0	05.7	06.2	06.7	06.7	06.6	06.5	06.4	06.3	06.3	06.4	06.6	06.9	07.0	06.7	06.6	06.8	06.9	05.90
26	06.8	06.7	06.6	06.4	06.2	06.2	06.6	06.8	06.9	06.9	06.7	06.9	06.9	06.7	06.6	06.5	06.5	06.6	06.8	07.0	07.1	07.3	07.4	07.4	06.77
27	07.4	07.4	07.8	07.8	08.0	08.2	08.6	09.3	09.6	10.2	10.3	10.4	10.5	10.6	10.7	10.6	10.7	11.3	11.8	12.3	12.7	12.9	13.1	13.5	10.24
28	13.9	14.1	14.7	15.0	15.1	15.3	16.1	16.9	17.1	17.2	17.3	17.2	16.9	17.3	17.3	17.3	17.1	17.1	16.5	16.3	16.3	16.2	16.1	15.5	16.24
29	15.2	14.4	13.8	13.4	12.3	11.7	11.6	11.7	11.5	11.4	11.0	10.5	10.2	09.6	09.5	09.4	09.4	09.1	09.4	09.7	10.6	11.6	12.3	13.1	11.35
30	14.1	14.7	15.5	15.9	16.6	17.4	17.9	18.8	19.0	19.5	19.3	19.3	19.2	19.4	19.3	19.3	19.4	19.5	19.9	20.1	20.3	20.4	20.5	20.4	18.57
M.	03.84	03.83	03.79	03.73	03.70	03.73	03.83	03.97	04.00	04.04	03.91	03.83	03.71	03.55	03.41	03.34	03.29	03.40	03.63	03.84	04.00	04.32	04.51	04.59	03.82

Oktober.

Datum	1a	2a	3a	4a	5a	6a	7a	8a	9a	10a	11a	MT	1p	2p	3p	4p	5p	6p	7p	8p	9p	10p	11p	MN	Mittel
1	20.3	20.3	20.1	19.9	19.9	20.1	19.5	18.5	17.9	17.3	16.4	16.1	16.1	15.9	16.2	16.2	16.4	17.1	17.6	18.1	18.2	18.1	17.6	17.5	17.97
2	17.3	16.6	16.2	15.3	14.5	13.1	11.7	11.0	11.0	10.8	10.6	10.1	10.2	10.1	10.4	10.8	11.2	11.7	12.5	13.1	12.5	12.2	11.6	10.4	12.29
3	08.2	07.6	05.8	04.6	04.1	03.1	02.5	02.1	02.1	02.0	01.9	01.8	01.5	01.4	01.3	01.4	01.6	02.5	03.4	04.1	04.6	05.2	05.6	06.6	03.54
4	07.8	08.4	09.0	09.5	09.9	10.5	11.3	12.2	12.8	13.4	14.0	14.1	14.5	14.4	14.2	13.8	13.4	13.1	12.5	11.9	11.2	10.4	09.4	09.0	11.70
5	07.7	07.4	07.0	07.0	07.8	08.7	09.9	10.9	12.6	13.2	13.6	14.1	14.4	15.1	15.4	15.7	16.3	16.7	17.5	17.6	18.3	18.3	18.2	18.1	13.40
6	17.5	16.9	15.9	14.4	13.0	11.0	09.2	07.6	06.7	05.7	04.8	04.0	02.9	01.8	00.9	99.8	99.0	98.1	96.9	96.4	96.4	96.7	97.1	97.6	04.60
7	98.5	99.4	00.1	01.1	01.7	03.0	04.0	05.5	06.3	07.0	07.5	07.8	08.0	08.7	08.9	09.1	09.8	10.1	11.2	12.0	12.5	13.2	13.8	14.3	07.23
8	15.1	15.6	16.5	17.1	17.5	18.4	19.3	20.1	20.7	20.8	20.8	20.7	20.5	20.0	20.0	19.5	19.5	19.5	19.4	19.3	19.4	19.0	18.4	17.9	18.96
9	16.9	16.2	15.5	14.1	13.1	11.9	10.8	10.1	09.5	09.3	09.1	08.0	08.1	07.7	07.3	07.0	06.5	06.5	06.5	06.2	05.6	05.4	05.2	04.7	09.22
10	04.3	04.2	03.7	03.7	03.5	03.7	04.2	04.6	04.7	04.9	05.4	05.6	05.8	06.8	07.3	08.2	08.7	09.3	09.5	09.9	10.1	10.3	10.3	10.1	06.62
11	10.2	10.2	10.1	10.1	10.2	10.2	10.1	10.4	10.4	10.3	10.1	09.8	09.1	08.5	07.9	07.2	06.6	06.2	05.9	05.4	05.3	05.2	04.6	04.4	08.27
12	04.4	03.9	03.5	03.4	03.3	03.3	03.3	03.3	03.3	02.8	02.7	02.5	01.8	01.4	01.2	00.7	00.6	00.6	00.5	00.4	00.3	00.2	99.8	99.4	01.94
13	99.2	98.5	97.6	97.4	96.6	96.2	95.6	94.8	94.6	94.3	93.8	93.2	92.8	92.2	91.7	91.6	91.6	91.7	91.7	91.8	92.2	92.2	92.2	92.2	93.99
14	92.3	92.6	92.8	93.1	93.1	93.5	93.9	94.1	94.3	94.5	94.5	94.5	94.5	94.7	94.9	95.5	96.3	96.7	97.6	97.9	98.7	99.3	99.5	99.9	95.36
15	00.8	01.3	01.6	01.8	02.3	02.7	03.1	03.5	03.2	03.0	02.8	02.2	01.8	00.9	00.3	99.9	99.9	00.1	00.4	00.9	01.7	02.1	02.7	02.9	01.75
16	03.1	03.1	03.1	03.1	03.1	03.1	03.3	03.6	03.9	03.6	03.4	03.3	03.1	02.9	02.9	02.9	03.3	03.8	04.4	04.5	04.8	05.1	05.3	05.5	03.68
17	05.6	06.1	06.3	06.3	06.5	06.7	06.7	06.7	06.9	06.7	06.6	06.4	05.9	05.7	05.6	05.1	04.9	04.8	04.5	04.4	04.4	04.4	04.4	04.3	05.66
18	04.4	04.4	04.6	04.7	04.8	05.1	05.7	06.4	07.0	07.6	07.7	07.8	07.9	08.1	08.1	08.3	08.4	09.0	09.5	09.8	10.2	10.4	10.6	10.6	07.55
19	10.8	11.0	11.4	11.4	11.3	11.5	11.7	12.0	12.8	12.9	12.8	12.7	12.6	12.6	12.7	12.8	13.0	13.4	14.0	14.4	14.9	15.2	15.2	15.3	12.85
20	15.4	15.4	15.4	15.3	15.2	15.1	15.0	15.2	14.7	14.6	14.5	14.1	13.6	13.4	12.6	12.2	11.9	11.7	11.4	11.4	11.3	10.8	10.5	10.4	13.38
21	10.0	09.5	08.6	08.5	08.3	07.8	07.5	07.2	07.2	07.1	07.0	06.7	06.4	06.5	06.0	05.9	05.8	05.8	06.0	05.7	05.6	05.1	05.1	05.0	06.85
22	04.7	04.6	04.3	03.6	02.7	02.2	01.7	01.1	00.5	00.1	99.4	98.8	98.4	97.7	96.9	96.7	96.0	95.7	94.8	94.3	93.9	93.7	93.6	93.4	98.70
23	93.2	92.9	92.9	92.7	92.2	91.9	91.9	91.7	91.3	90.8	90.4	89.6	89.0	87.7	87.1	87.5	87.3	87.0	87.0	87.0	87.1	87.1	87.2	87.2	89.57
24	87.2	87.4	87.2	87.1	87.1	87.2	87.3	87.7	87.9	88.1	87.8	87.9	87.6	87.5	87.4	87.6	88.1	88.2	88.2	88.3	88.4	88.5	88.1	88.2	87.75
25	88.2	88.3	88.3	88.4	88.8	89.4	90.2	91.4	92.4	92.7	93.6	94.1	94.4	95.1	95.2	95.7	96.1	96.5	96.8	97.0	97.2	97.5	97.7	97.7	93.45
26	98.0	98.1	98.3	98.4	98.6	98.8	99.2	99.4	99.9	00.1	00.6	00.9	01.1	02.0	02.5	02.9	03.0	03.1	03.5	03.7	03.2	03.5	03.2	02.9	01.04
27	02.9	02.8	02.0	01.5	01.5	01.0	00.7	00.2	99.8	99.7	99.1	98.9	98.8	98.5	98.0	97.9	97.8	97.7	97.6	97.4	97.0	96.8	96.6	96.5	99.20
28	96.2	96.0	95.9	95.5	94.3	94.2	93.9	93.6	93.3	93.9	94.2	94.7	95.1	95.8	96.2	97.2	97.6	98.2	99.2	99.5	00.5	01.2	01.9	02.4	96.69
29	03.1	03.5	03.6	04.2	04.6	05.0	05.4	06.5	06.7	06.9	06.9	06.9	06.7	06.2	05.7	04.9	04.2	03.3	02.5	02.1	02.6	03.3	04.0	04.8	04.73
30	05.3	05.9	06.3	07.0	07.3	07.7	08.5	09.4	09.7	10.4	10.9	11.3	11.4	11.9	12.3	12.4	12.5	13.0	13.4	13.6	13.8	14.4	14.5	15.2	10.75
31	15.4	15.5	15.6	15.8	16.4	17.2	17.5	18.9	19.5	19.8	20.9	21.5	22.0	22.9	23.6	24.1	24.6	25.3	25.9	26.3	26.5	26.6	26.7	26.8	21.47
M.	05.29	05.28	05.14	05.03	04.94	04.95	04.99	05.15	05.28	05.30	05.28	05.16	05.03	04.97	04.86	04.85	04.90	05.05	05.22	05.30	05.43	05.53	05.50	05.52	05.16

$H = 22$ m, $H_b = 24.9$ m — $\varphi = 59^0\ 55'$ N

$C_g = 1.35$ mb bei 1009 mb — $\lambda = 10^0\ 43'$ E

November.

900 oder 1000 mb +

Datum	1a	2a	3a	4a	5a	6a	7a	8a	9a	10a	11a	MT	1p	2p	3p	4p	5p	6p	7p	8p	9p	10p	11p	MN	Mittel
1	26.8	26.8	26.8	26.9	26.8	26.8	26.9	27.3	27.8	28.0	28.1	28.3	28.4	28.5	28.6	28.6	28.7	28.7	28.7	28.6	28.6	28.3	28.0	27.9	27.87
2	27.7	27.6	27.4	26.8	26.5	26.3	26.1	25.4	25.9	25.7	25.3	24.8	24.0	23.5	22.9	22.6	21.9	21.8	21.1	20.5	20.1	19.8	19.0	18.7	23.81
3	17.9	17.7	16.9	16.1	15.7	14.8	14.3	13.5	12.7	12.0	11.7	10.9	10.4	09.4	08.8	08.2	07.8	07.0	06.1	05.1	04.8	03.9	02.9	02.1	10.45
4	01.1	00.0	98.9	97.5	96.2	95.3	94.9	94.0	93.9	93.9	94.1	94.3	94.5	94.8	95.4	95.7	96.4	96.6	97.3	97.5	98.1	98.3	98.5	98.6	96.49
5	98.7	98.8	99.3	99.4	99.4	99.4	99.6	99.8	99.8	99.5	99.5	99.3	98.9	98.7	98.2	97.9	97.7	97.1	96.5	95.9	95.7	95.3	95.0	94.8	98.09
6	94.6	94.2	94.0	93.5	93.3	93.1	92.6	92.4	92.3	92.5	92.8	92.6	92.7	93.5	94.3	94.9	95.3	95.5	95.9	96.2	96.5	96.9	97.3	97.5	94.35
7	97.8	98.3	98.6	98.6	98.7	98.9	98.9	99.3	99.4	99.1	99.1	98.9	98.7	98.7	98.5	98.3	98.2	98.2	98.3	98.5	98.7	98.8	98.7	98.7	98.66
8	98.5	98.4	98.4	98.4	98.4	98.7	98.9	99.1	99.3	99.4	00.0	99.9	99.8	99.9	99.8	99.5	99.6	99.8	99.9	00.0	00.4	00.6	00.7	00.6	99.50
9	00.7	00.6	00.6	00.5	00.5	00.5	00.6	00.8	01.4	01.5	01.5	01.3	01.3	01.2	01.5	01.7	02.1	02.6	03.0	03.5	03.8	04.1	04.5	04.7	01.85
10	04.9	05.0	05.1	05.0	05.1	05.1	05.9	06.7	07.1	07.1	07.2	07.3	07.3	07.8	08.4	09.0	09.3	10.1	10.6	11.4	12.1	12.6	13.4	13.7	08.22
11	14.4	14.8	15.5	15.7	16.2	16.9	17.7	19.1	20.0	21.0	21.6	21.9	22.3	22.7	23.4	23.8	24.4	25.0	25.8	26.8	26.8	27.0	27.2	27.6	21.57
12	27.8	27.9	27.9	28.0	28.0	28.0	28.2	29.1	29.1	29.0	28.9	28.7	28.2	27.7	27.3	27.1	27.0	26.6	26.3	26.1	26.0	25.9	25.8	25.3	27.50
13	25.0	24.4	24.2	24.1	23.9	23.7	23.7	23.5	23.3	23.3	23.0	22.8	22.3	21.7	21.2	21.0	20.9	20.6	20.7	20.3	20.3	20.1	19.9	19.3	22.22
14	19.0	18.4	18.1	17.8	17.2	16.8	16.2	16.0	16.0	15.8	15.5	15.1	14.9	14.3	14.1	14.2	14.2	14.1	14.3	14.5	14.8	15.0	15.4	15.6	15.72
15	15.6	15.7	15.8	16.4	16.6	16.5	16.6	17.1	17.4	17.6	18.1	18.4	18.4	17.9	17.6	17.6	17.8	17.8	18.0	18.0	18.2	18.4	18.4	18.4	17.43
16	18.4	18.4	18.3	18.2	18.3	18.3	18.3	18.3	18.8	19.3	19.2	18.7	18.6	18.3	18.0	17.7	17.7	17.5	17.6	17.7	17.9	18.8	19.6	20.1	18.42
17	20.7	21.3	22.3	23.2	23.6	24.7	25.6	26.8	27.7	28.6	29.3	29.4	29.4	29.7	30.4	30.5	30.8	31.4	31.6	32.1	32.4	32.7	33.3	33.4	28.37
18	33.4	33.1	32.7	32.6	32.5	32.5	32.4	32.5	32.3	32.2	32.4	32.0	31.7	31.1	30.5	30.0	29.9	29.9	29.5	29.5	29.6	29.5	29.4	29.0	31.26
19	28.8	27.9	27.7	27.1	26.7	26.4	25.8	25.1	24.6	23.6	23.1	22.3	21.4	20.5	19.6	19.4	19.0	18.4	17.4	17.0	16.2	15.5	15.0	13.6	21.75
20	13.1	12.3	12.0	11.3	10.7	10.7	10.5	10.3	10.4	10.9	11.1	11.2	11.2	11.3	11.6	12.2	12.8	13.3	14.2	14.3	14.2	13.9	14.3	13.9	12.15
21	13.3	13.1	12.2	11.4	10.4	09.5	08.9	08.2	08.0	07.8	07.6	07.6	08.2	08.1	08.3	08.6	09.2	09.7	10.1	10.1	10.4	10.3	10.5	10.5	09.67
22	10.0	10.1	09.9	09.7	09.7	09.5	09.5	09.2	08.8	08.4	07.8	06.6	05.6	04.3	03.2	01.6	00.4	99.1	97.7	96.5	95.8	95.8	95.7	95.8	04.20
23	97.1	97.7	98.6	99.5	99.9	00.8	01.6	02.1	03.4	03.6	03.9	04.0	04.0	04.2	04.2	04.2	04.2	04.4	04.6	04.8	04.4	04.5	04.3	03.9	02.66
24	03.1	02.6	01.8	00.0	98.7	97.5	96.5	96.7	97.9	98.7	99.3	99.5	99.7	00.0	00.0	00.1	00.0	99.7	99.7	99.5	98.9	98.5	97.9	97.9	99.34
25	97.8	97.8	97.9	97.8	97.8	98.2	98.8	99.2	00.1	00.5	00.8	00.8	00.8	01.1	01.5	02.0	02.5	03.3	04.1	04.5	05.3	05.5	06.2	06.5	01.28
26	06.7	06.8	07.5	07.6	07.7	08.3	08.7	09.1	09.2	09.0	08.4	07.8	07.5	06.5	05.6	04.6	03.4	02.1	00.1	99.2	97.1	95.2	93.6	91.7	04.31
27	90.1	89.2	88.5	87.8	87.3	87.2	87.1	86.8	86.7	86.8	86.8	86.8	87.0	87.2	87.3	87.4	87.5	87.7	88.1	88.2	88.2	88.4	88.5	88.5	87.71
28	88.6	88.6	88.5	88.4	88.6	88.9	89.7	90.5	91.7	92.9	94.0	95.6	96.6	97.9	99.0	01.1	02.1	03.3	04.4	05.6	06.4	07.1	07.5	07.8	96.87
29	08.3	08.4	08.5	08.4	08.3	08.3	08.4	08.7	08.9	08.9	08.8	08.7	08.5	08.3	07.9	07.8	07.8	07.6	07.7	07.6	07.7	07.6	07.5	07.3	08.16
30	07.3	07.6	07.4	07.5	07.5	07.5	07.5	07.7	07.6	07.9	08.0	08.1	08.0	08.0	08.2	08.5	08.9	09.0	09.3	09.4	09.3	09.4	09.8	09.9	08.30
M.	10.26	10.12	10.04	09.84	09.67	09.64	09.68	09.81	10.05	10.15	10.23	10.12	10.01	09.89	09.84	09.86	09.92	09.93	09.95	09.96	09.96	09.92	09.93	09.78	09.94

December.

Datum	1a	2a	3a	4a	5a	6a	7a	8a	9a	10a	11a	MT	1p	2p	3p	4p	5p	6p	7p	8p	9p	10p	11p	MN	Mittel
1	09.9	09.7	09.4	09.3	09.2	09.2	09.0	09.2	09.3	09.4	09.4	09.2	09.2	08.7	08.7	08.7	08.9	08.8	09.1	09.1	09.1	09.1	09.3	09.0	09.16
2	09.0	08.9	08.8	08.6	08.7	08.7	08.8	09.1	09.3	09.8	10.0	10.1	10.3	11.0	11.4	12.2	12.6	13.5	13.9	14.5	14.8	15.0	15.8	16.2	11.29
3	16.3	16.6	16.8	16.8	17.1	17.6	18.0	19.4	20.7	21.4	22.1	22.9	22.9	23.2	24.0	24.9	25.5	26.1	27.0	27.4	27.8	28.1	28.3	28.4	22.47
4	28.4	28.2	28.1	27.9	27.8	27.4	27.2	27.0	26.9	26.5	26.4	26.1	26.0	25.7	25.7	25.7	25.6	25.6	25.5	25.4	25.3	25.0	24.6	24.7	26.36
5	24.8	24.8	25.1	24.7	24.6	24.6	24.5	24.6	24.6	24.4	24.3	23.9	23.2	22.6	22.2	21.2	20.6	20.1	19.3	18.0	17.4	16.6	14.7	13.5	21.85
6	11.6	09.5	07.5	05.8	04.2	02.8	01.5	01.1	01.4	02.3	03.1	03.3	03.7	03.9	04.6	04.9	05.8	07.1	08.9	10.0	10.7	11.9	12.5	13.3	06.31
7	13.9	14.4	14.8	15.5	15.7	15.8	16.0	16.9	17.2	17.3	17.3	16.6	16.5	16.3	16.2	16.0	16.1	15.8	15.7	15.7	15.7	15.7	15.8	15.8	15.95
8	15.7	15.5	15.4	15.2	14.7	14.5	14.2	14.0	14.3	14.4	14.3	13.7	13.5	13.4	13.2	12.8	12.6	12.5	12.4	12.2	12.1	11.7	11.2	10.6	13.50
9	10.3	10.1	09.5	09.2	08.4	08.0	07.3	06.8	06.2	05.9	05.2	04.6	04.0	03.4	02.9	02.2	01.7	01.1	00.3	00.0	00.0	00.0	00.0	99.9	04.46
10	00.0	99.8	99.2	99.0	98.4	98.1	97.7	97.3	97.0	96.6	96.0	95.6	95.0	94.2	93.6	93.8	93.7	93.5	93.3	93.3	93.2	92.9	92.7	92.6	95.69
11	92.6	92.5	92.5	92.5	92.4	92.5	92.5	92.7	93.1	93.3	93.4	93.6	93.5	93.5	93.6	93.7	93.8	94.0	94.3	94.4	94.6	94.6	94.8	94.8	93.47
12	94.8	94.7	94.7	94.7	94.6	94.7	94.7	94.9	95.0	95.5	95.8	95.7	95.7	95.8	95.8	95.9	96.2	96.3	96.8	97.3	97.3	97.6	97.8	97.9	95.84
13	97.9	97.9	97.6	97.4	97.3	97.0	96.7	96.7	96.9	97.1	97.1	96.7	96.8	96.6	96.6	96.8	97.6	98.2	98.7	99.4	99.9	01.0	01.7	02.2	97.99
14	02.6	03.1	04.0	04.7	05.3	06.1	07.1	08.3	09.0	09.8	10.2	10.8	10.9	11.6	12.0	12.7	13.0	13.7	14.3	14.7	15.0	15.2	15.3	15.3	10.20
15	15.5	15.5	15.7	15.9	15.9	16.4	16.8	17.0	17.7	17.9	18.0	18.0	17.9	17.8	18.3	18.4	18.6	18.6	18.9	19.1	19.2	19.1	18.8	18.8	17.66
16	18.7	18.1	18.0	17.4	16.5	16.0	15.4	14.2	13.8	13.5	12.9	12.2	11.6	10.8	10.5	10.5	10.0	09.8	08.8	08.0	07.6	06.6	06.0	05.2	12.17
17	03.9	02.7	01.4	99.3	97.6	95.8	93.7	91.7	90.7	90.7	91.5	92.4	93.4	94.6	95.4	96.3	96.7	96.8	97.4	97.6	97.7	97.8	98.0	97.7	96.28
18	97.5	97.0	97.0	96.9	96.9	96.8	96.4	95.9	95.7	95.1	94.8	93.8	93.1	92.4	90.9	90.8	90.8	91.1	91.8	92.1	92.2	92.8	93.1	93.4	94.10
19	93.8	94.2	94.4	95.0	95.0	95.2	95.1	95.3	95.6	96.3	96.7	97.2	97.4	98.1	98.4	98.6	99.2	99.5	99.8	99.8	99.7	99.6	99.5	99.4	97.20
20	99.2	99.2	99.4	99.1	99.7	99.6	99.4	99.6	99.7	99.6	00.0	99.9	00.0	99.6	99.2	99.1	98.7	98.3	98.0	98.2	98.2	97.8	97.3	96.7	98.98
21	96.1	95.3	93.7	92.9	92.0	90.8	89.8	88.8	87.1	86.5	85.6	84.6	83.8	83.0	82.3	82.3	82.1	82.1	81.9	81.7	81.6	81.3	81.2	81.0	86.15
22	80.8	80.3	79.7	79.2	78.9	78.7	78.6	77.5	77.9	78.6	78.9	79.7	80.8	82.5	83.1	84.2	84.7	85.5	85.9	86.2	86.3	86.2	86.3	86.8	81.97
23	86.4	86.1	85.5	84.3	83.7	82.9	82.4	82.0	81.3	81.0	80.5	80.2	79.6	79.1	79.6	79.6	79.6	80.1	80.5	80.8	81.2	81.7	82.4	82.7	81.80
24	83.2	83.6	83.8	84.0	84.1	84.8	85.0	85.4	85.8	86.0	86.1	86.1	85.9	85.5	85.7	85.9	85.9	85.9	85.8	85.9	86.0	86.1	86.2	86.3	85.38
25	86.4	86.4	86.5	86.5	86.4	86.6	86.3	86.5	86.5	86.5	86.5	86.4	86.3	86.2	86.1	86.0	86.1	86.1	86.3	86.6	86.7	86.7	87.5	87.6	86.49
26	87.5	87.6	87.6	87.7	88.0	88.1	88.6	88.9	89.3	89.4	89.7	89.7	90.3	90.7	90.9	91.7	92.1	93.0	93.6	94.0	94.4	94.7	95.4	95.5	90.77
27	95.8	95.8	95.7	95.7	95.7	95.5	95.0	94.9	94.9	94.7	94.7	93.8	93.4	93.1	92.5	92.0	91.6	91.3	90.8	90.6	90.6	90.5	90.4	90.2	93.30
28	90.3	89.8	89.7	89.7	89.7	89.7	89.9	90.1	90.5	90.6	90.6	90.6	90.6	90.9	91.5	91.6	91.7	91.7	91.9	92.0	92.3	92.1	92.0	91.9	90.89
29	91.8	91.7	91.6	91.0	90.6	89.6	88.7	88.4	87.7	86.9	85.8	84.8	84.6	83.2	82.5	81.5	80.6	79.4	77.5	76.6	75.2	74.1	72.1	70.9	83.62
30	69.5	68.0	67.0	66.5	65.7	65.2	65.1	64.8	64.7	65.1	65.6	66.0	66.3	66.8	67.1	67.3	67.3	67.3	67.1	67.3	67.8	68.0	68.2	68.7	66.77
31	68.8	68.9	69.1	69.8	70.1	70.1	70.1	71.3	72.3	72.9	73.1	73.9	74.3	75.4	76.3	77.7	79.3	79.7	81.0	81.6	82.8	84.2	85.5	86.7	75.62
M.	99.77	99.55	99.33	99.10	98.87	98.67	98.44	98.40	98.45	98.55	98.57	98.45	98.40	98.37	98.41	98.55	98.67	98.79	98.92	99.02	99.11	99.15	99.17	99.15	98.83

H = 22 m
h_f = 2.1 m

φ = 59° 55′ N
λ = 10° 43′ E

Januar.

Datum	1a	2a	3a	4a	5a	6a	7a	8a	9a	10a	11a	MT	1p	2p	3p	4p	5p	6p	7p	8p	9p	10p	11p	MN	Mittel
1	1.9	1.3	0.8	0.5	0.2	0.2	0.1	0.2	**0.0**	0.1	0.4	0.9	1.4	1.9	2.4	2.3	1.7	1.7	1.5	1.7	2.3	2.7	**3.4**	3.3	1.37
2	2.7	2.3	3.3	5.4	5.6	**5.6**	5.4	4.9	4.6	4.2	4.6	4.9	5.0	5.2	5.6	4.9	4.8	4.5	4.5	4.5	3.6	**1.6**	1.7	1.9	4.22
3	1.7	1.6	1.5	1.7	2.0	2.2	1.7	1.8	2.3	**2.5**	1.9	2.1	2.2	2.1	1.6	1.4	0.9	0.8	-0.1	**-0.3**	-0.3	-0.1	-0.1	-0.2	1.29
4	0.0	-0.1	-0.2	-0.3	-0.3	-0.4	-0.4	-0.2	-0.3	-0.3	0.1	0.7	1.2	**1.3**	0.8	0.6	0.1	-0.7	-1.0	-1.5	-1.3	-1.1	-1.0	**-1.9**	-0.26
5	**-2.3**	-2.8	-3.0	-3.1	-3.4	-3.9	-3.9	**-4.9**	-4.9	-4.6	-4.6	-4.5	-3.9	-3.4	-3.1	-2.9	-2.9	-2.7	-2.8	-3.0	-3.2	-3.7	-4.1	-3.9	-3.56
6	-3.3	-3.5	-3.7	-4.0	-4.1	-3.9	-4.0	-4.0	**-4.1**	-3.4	-2.7	-0.8	1.1	1.0	1.1	0.7	0.3	**1.2**	0.5	0.4	-0.4	-0.3	-0.5	-0.3	-1.53
7	-0.5	-0.5	-0.6	-0.6	-0.6	-0.6	-0.6	-0.2	-0.2	-0.1	-0.1	0.3	0.3	0.2	0.0	-0.6	**-0.7**	-0.1	**7.8**	7.7	6.8	6.6	5.5	4.6	1.41
8	**4.8**	4.1	3.7	2.4	1.4	0.7	0.4	0.2	0.1	**-0.3**	0.3	0.4	0.6	1.3	1.5	1.4	1.7	2.6	3.0	2.9	3.0	3.1	3.0	3.1	1.89
9	2.9	2.9	2.9	2.8	2.9	2.6	2.6	2.7	2.6	2.7	2.8	3.0	3.3	3.1	3.0	**3.4**	3.3	3.4	3.0	2.6	1.3	0.5	0.3	**0.1**	2.53
10	**0.1**	0.0	-0.1	-0.6	-0.1	-1.0	-1.3	-2.2	-2.0	-1.9	-1.8	-1.7	-1.1	-0.3	-0.2	-0.3	-0.6	-0.8	-1.5	-1.5	-1.6	-1.6	-2.0	**-2.2**	-1.10
11	**-2.3**	-1.4	-1.2	-1.4	-1.2	0.5	1.4	2.1	2.9	2.9	3.2	3.5	3.6	4.2	4.5	4.7	4.5	4.0	5.3	5.4	5.8	5.9	6.1	**6.2**	2.88
12	**5.9**	5.7	4.6	4.1	3.5	3.1	2.5	2.3	1.9	1.6	1.0	1.0	1.0	1.1	0.4	0.7	0.4	-0.6	-1.0	**-1.3**	-1.0	-0.8	-0.8	-0.6	1.45
13	-0.7	-0.8	-1.1	-1.4	-1.7	-1.9	-2.1	-2.1	-2.3	-2.1	-2.1	-1.8	-1.6	-1.2	-1.7	-1.8	**-2.5**	-1.1	0.3	0.9	1.5	1.8	**2.4**	2.3	-0.87
14	**2.2**	2.6	3.5	4.0	3.9	4.1	3.8	3.4	3.2	2.8	2.9	2.8	2.8	3.0	3.3	3.6	3.8	4.6	5.3	**5.5**	5.3	5.0	4.6	4.6	3.78
15	4.9	4.4	4.2	3.9	3.8	3.8	**3.6**	3.7	3.8	4.1	4.4	4.4	4.5	**5.8**	5.7	4.7	3.8	3.7	3.6	3.9	3.7	3.9	4.1	3.6	4.17
16	3.7	4.7	4.7	3.9	3.8	3.7	**3.0**	4.0	3.5	3.9	4.6	5.0	5.5	5.7	5.7	5.6	5.4	5.3	5.1	6.3	**6.7**	6.6	6.3	6.0	4.95
17	5.4	**5.6**	5.5	4.8	4.4	3.8	3.3	2.8	2.7	2.7	2.8	3.7	4.6	5.3	4.8	3.7	3.2	2.4	1.3	0.5	0.0	-0.6	**-1.1**	-1.0	2.94
18	-1.2	-1.4	-1.5	**-1.6**	-1.5	-1.0	-0.4	-0.2	-0.1	0.2	0.5	0.8	1.1	2.4	2.6	2.1	1.6	1.5	1.4	2.9	3.2	2.3	3.0	**3.2**	0.83
19	2.6	3.2	2.5	3.2	3.5	3.0	2.5	2.0	2.5	2.4	2.7	3.7	4.5	**4.7**	4.6	3.8	2.7	1.7	0.3	-0.7	-1.3	-1.7	-2.6	**-3.0**	1.95
20	-3.5	-3.9	-4.5	-4.9	-5.3	-5.7	-6.2	-6.2	**-6.5**	-6.3	-6.0	-5.4	-4.5	-3.8	**-3.3**	-3.6	-3.9	-4.2	-5.0	-5.1	-5.6	-5.7	-5.9	-6.1	-5.05
21	-6.4	-6.5	-6.6	-6.8	-6.9	**-7.0**	-6.7	-6.4	-6.5	-6.5	-5.7	-4.7	-4.0	-3.3	-3.2	-3.3	-3.3	-2.9	-2.2	-2.1	-1.9	-1.9	-1.9	**-1.7**	-4.52
22	-1.7	-1.6	-1.7	**-1.8**	-1.7	-1.7	-1.7	-1.7	-1.8	-1.7	-1.5	-1.1	**-0.7**	-0.7	-0.7	-0.8	-1.1	-1.1	-1.0	-1.0	-1.1	-1.1	-1.1	-1.1	-1.30
23	**-1.4**	-1.5	-1.5	-1.6	-1.7	-1.8	-2.0	-2.3	-2.6	-2.6	**-2.6**	-2.6	-2.6	-2.5	-2.5	-2.5	-2.5	-2.5	-2.1	-2.0	-1.9	-1.8	-1.8	-1.8	-2.11
24	-1.9	-1.8	**-1.8**	-1.8	-1.9	-2.4	-2.5	-2.5	-2.5	-2.7	-2.7	-2.7	-2.7	-2.4	-2.3	-2.6	-3.0	-3.1	-3.8	-4.2	-4.4	-5.0	**-5.3**	-4.6	-2.94
25	**-4.3**	-4.0	-3.3	-4.0	-4.1	-3.6	-3.1	-2.9	-3.1	-2.8	-1.0	-0.6	0.2	**1.8**	1.2	0.1	-0.8	-1.2	-1.8	-2.0	-1.9	-2.9	-3.1	-3.7	-2.12
26	-4.1	-4.5	-4.5	-4.8	-5.1	-5.9	-6.0	-5.8	-6.1	-5.3	-4.7	-4.9	-4.3	**-4.1**	-4.1	-4.4	-5.1	-5.6	-5.7	-6.3	-6.9	-7.7	**-8.2**	-8.1	-5.51
27	-8.5	-8.7	-9.3	-9.3	-9.5	**-9.7**	-9.7	-9.5	-9.5	-9.1	-8.5	-7.4	-6.4	-5.4	**-4.9**	-5.7	-5.7	-5.9	-6.0	-5.9	-6.5	-6.8	-7.1	-7.2	-7.59
28	-7.1	-7.4	**-8.0**	-7.7	-7.4	-7.1	-6.6	-6.0	-6.0	-5.6	-5.4	-5.0	-4.8	-4.6	-4.6	-4.5	-4.5	-4.3	-4.4	-4.4	**-4.3**	-4.3	-4.4	-4.4	-5.53
29	-4.2	-4.2	-4.3	-4.3	-4.9	**-4.9**	-4.9	-4.6	-4.9	-4.5	-4.1	-3.9	-3.7	-2.9	-2.6	-1.6	-0.8	-0.5	0.8	**0.9**	0.7	0.6	0.5	0.3	-2.58
30	0.4	0.8	0.8	0.6	0.4	0.4	0.3	**0.0**	0.1	0.4	0.7	1.3	1.7	2.3	**2.6**	2.2	1.8	1.1	0.2	0.6	0.4	0.6	1.5	1.2	0.93
31	**1.8**	1.8	1.9	2.4	2.5	2.4	2.5	2.7	2.8	3.5	3.5	4.5	5.1	5.4	**6.9**	6.9	6.2	6.1	5.8	5.6	5.1	4.8	4.5	3.6	4.10
M.	-0.40	-0.44	-0.55	-0.65	-0.76	-0.85	-0.94	-0.93	**-0.98**	-0.83	-05.5	-0.13	0.30	0.75	**0.81**	0.59	0.28	0.24	0.36	0.35	0.19	-0.04	-0.13	-0.25	-0.19

Februar.

Datum	1a	2a	3a	4a	5a	6a	7a	8a	9a	10a	11a	MT	1p	2p	3p	4p	5p	6p	7p	8p	9p	10p	11p	MN	Mittel
1	2.9	2.5	2.0	2.0	2.1	2.2	2.1	2.0	1.7	1.7	2.5	3.0	3.3	**3.8**	3.2	2.5	1.3	0.5	-0.6	-1.1	-1.8	-2.1	-2.4	**-3.0**	1.26
2	-3.1	-3.1	-3.1	-3.3	-3.3	-3.4	-3.6	**-4.4**	-3.9	-3.9	-3.4	-1.6	-0.8	0.1	**0.3**	0.2	0.0	-0.3	-0.6	-0.9	-1.4	-1.6	-2.2	-2.6	-2.08
3	-3.2	-3.6	-3.9	-4.3	-4.3	-4.4	**-4.5**	-4.0	-3.3	-2.9	-1.9	0.2	2.7	4.3	**4.5**	4.4	3.8	3.5	2.6	2.7	3.0	3.3	3.3	3.2	0.05
4	3.0	2.5	2.3	2.4	2.1	2.0	1.2	0.9	1.3	1.7	2.3	3.2	3.7	4.8	**5.0**	4.2	3.4	2.5	1.6	1.6	1.5	1.4	1.1	**0.8**	2.35
5	0.7	**0.6**	0.9	0.8	1.4	2.8	3.2	3.7	3.9	4.2	4.6	4.8	6.0	6.5	6.4	**6.5**	5.8	5.0	4.6	4.5	4.4	3.8	3.6	3.1	3.82
6	3.0	3.0	2.8	2.3	1.9	1.7	1.5	1.2	1.2	2.1	3.4	4.2	4.9	5.5	**5.6**	4.9	3.6	2.9	2.4	-2.4	1.8	1.4	0.7	**0.5**	2.70
7	0.1	-0.2	-0.5	-0.5	-1.0	-1.7	-2.4	-2.9	**-3.1**	-2.8	-1.3	-1.2	2.4	3.0	**3.1**	2.8	1.7	1.1	0.1	1.2	-1.4	-1.6	-2.6	-2.9	-0.54
8	-3.2	-3.9	-4.5	-5.1	-5.7	-6.1	-6.6	**-6.8**	-6.8	-6.0	-5.3	-4.6	-3.3	-1.6	1.1	**1.8**	1.4	1.1	1.3	1.3	1.3	1.2	1.3	1.4	-2.35
9	1.5	1.2	1.3	1.2	0.5	0.4	0.4	0.3	**0.2**	0.8	1.5	2.2	3.2	3.7	**3.9**	3.8	3.6	3.1	2.6	2.0	1.7	1.4	0.8	0.9	1.76
10	1.6	1.5	1.0	0.8	0.0	**-0.6**	-0.3	-0.2	-0.3	0.1	1.0	2.2	2.9	3.4	4.4	4.3	4.2	4.2	**4.7**	4.6	4.5	4.4	4.3	4.1	2.37
11	3.9	3.7	3.6	3.6	3.6	3.6	3.6	3.6	3.7	3.8	4.0	**4.5**	4.5	4.4	4.2	3.7	3.5	3.5	3.1	3.0	3.0	**2.8**	2.9	2.9	3.61
12	2.9	2.9	2.9	**2.5**	2.8	3.8	5.0	5.2	5.4	5.6	5.5	5.5	**5.7**	5.3	5.0	4.8	**4.2**	3.9	3.8	3.7	3.4	2.9	2.8	2.8	4.10
13	2.9	3.0	2.9	3.0	2.8	**2.1**	2.6	3.2	4.0	4.4	**4.4**	2.8	3.0	2.8	2.7	2.9	3.1	3.1	3.4	3.4	3.7	3.6	3.2	3.1	3.17
14	3.1	3.2	3.4	3.3	3.5	3.5	3.4	3.3	3.1	2.9	**2.5**	2.9	3.2	3.6	3.7	3.7	3.9	3.9	**4.1**	4.0	3.9	3.8	3.8	3.8	3.48
15	3.8	3.7	3.7	3.6	3.0	**2.0**	2.0	2.4	2.3	2.7	3.4	4.7	5.5	**5.8**	5.0	4.5	3.8	3.4	3.2	3.2	3.1	3.2	3.2	3.3	3.52
16	3.1	2.9	**2.8**	2.9	2.9	3.0	3.0	3.0	3.2	3.9	**4.2**	4.2	4.2	4.1	3.5	3.2	3.4	3.5	3.8	3.5	3.6	3.7	3.8	3.7	3.46
17	3.7	3.6	3.6	3.5	3.4	3.2	3.3	3.6	3.6	**3.8**	3.8	3.7	3.5	3.5	3.6	3.3	3.1	3.0	2.8	2.7	2.6	2.6	2.6	**2.5**	3.28
18	2.3	2.1	1.3	1.4	1.2	1.2	1.2	0.8	1.1	1.4	1.8	1.8	1.7	1.8	**2.4**	2.1	1.7	1.5	1.2	0.8	0.5	**0.2**	0.4	0.2	1.34
19	**0.0**	-0.4	-0.4	-0.6	-1.1	-1.5	-3.1	-3.9	-3.6	-3.1	-2.4	-1.8	-1.0	-0.8	-1.0	-1.4	-1.7	-2.4	-2.6	-2.7	-3.0	-3.9	-4.2	**-4.4**	-2.12
20	-4.7	-4.9	-5.3	-5.5	-5.9	-6.6	-7.0	-7.6	-7.3	-6.2	-4.7	-3.3	-2.0	-1.2	**-1.0**	-1.2	-1.6	-2.5	-3.4	-4.6	-5.6	-6.2	-6.8	**-7.6**	-4.70
21	-8.0	-8.4	-8.9	-9.3	-9.2	-9.3	-10.1	**-10.2**	-10.2	-8.8	-6.7	-5.4	-3.7	-2.7	**-2.2**	-2.4	-2.6	-3.5	-4.0	-4.6	-5.1	-5.7	-5.9	-6.3	-6.38
22	-6.9	-7.1	-6.8	-6.6	-6.9	**-8.0**	-7.8	-7.0	-5.9	-5.0	-3.8	-3.1	-2.9	-1.8	-1.5	-1.4	**-1.2**	-1.5	-1.2	-1.5	-1.5	-1.8	-1.9	-2.1	-3.97
23	-2.5	-3.0	-3.6	-4.7	**-4.9**	-3.9	-3.9	-3.5	-2.7	-2.1	-1.8	-1.0	-0.1	0.1	**0.2**	0.2	0.2	0.1	-0.1	-0.2	-0.4	-0.9	-1.1	-1.6	-1.72
24	-1.8	-2.0	-2.4	**-2.8**	-2.7	-2.7	-2.5	-2.2	-2.1	-1.9	-1.8	-1.6	-1.2	**-0.2**	-0.8	-0.8	-1.4	-1.8	-1.7	-1.7	-1.7	-1.6	-1.4	-1.6	-1.77
25	**-1.5**	-1.5	-1.4	-1.2	-1.0	-0.8	-0.7	-0.2	-0.2	-0.1	-0.2	0.4	0.6	**0.8**	0.6	0.4	0.2	0.1	0.0	-0.3	-0.4	-0.4	-0.4	-0.2	-0.31
26	**0.2**	0.3	0.4	0.6	0.7	0.8	1.0	1.3	1.2	0.8	1.0	1.4	1.3	1.8	2.1	2.4	**2.5**	2.3	2.4	2.4	2.3	2.3	2.1	1.6	1.47
27	**1.4**	0.8	0.5	-0.1	-0.4	-0.5	-0.5	-0.5	-0.5	-0.6	-0.6	-0.6	-0.6	-1.0	-1.8	-2.4	-2.7	-3.1	-3.6	**-3.8**	-3.7	-3.5	-3.1	-3.2	-1.42
28	-3.1	-2.9	-2.7	-2.6	**-3.1**	-2.9	-2.7	-2.2	-2.1	-2.2	-1.8	-1.5	-1.3	-1.2	-1.1	-1.1	-1.1	-0.8	-0.8	**-0.7**	-0.7	-0.7	-0.8	-0.8	-1.70
M.	0.08	-0.12	-0.29	-0.45	-0.63	-0.72	**-0.79**	-0.75	-0.58	-0.20	0.36	0.93	1.62	2.09	**2.18**	2.00	1.65	1.30	1.04	0.80	0.63	0.43	0.25	0.06	0.45

H = 22 m
h_t = 2.1 m

φ = 59° 55′ N
λ = 10° 43′ E

März.

Datum	1a	2a	3a	4a	5a	6a	7a	8a	9a	10a	11a	MT	1p	2p	3p	4p	5p	6p	7p	8p	9p	10p	11p	MN	Mittel
1	-1.1	-1.1	-1.1	-1.2	-1.2	-1.1	-1.3	-0.8	-0.7	-0.7	-0.6	-0.5	-0.2	0.1	0.3	0.3	0.4	0.5	0.6	0.6	0.6	0.7	0.7	0.7	-0.25
2	0.7	0.6	0.6	0.6	0.6	0.6	0.6	1.0	1.3	1.3	1.4	1.8	2.0	2.4	2.5	2.4	1.4	0.5	0.3	-0.7	-1.6	-2.7	-3.3	-4.0	0.40
3	-5.3	-5.8	-6.5	-7.4	-7.6	-8.1	-8.4	-7.4	-6.5	-4.9	-3.1	-1.6	-0.3	1.3	1.2	0.9	0.2	-0.9	-1.2	-2.2	-2.8	-3.7	-4.7	-5.4	-3.76
4	-5.5	-5.2	-5.4	-5.9	-6.1	-6.3	-6.0	-5.6	-5.3	-4.4	-3.3	-2.0	0.0	3.3	4.0	4.4	4.4	3.9	3.2	2.4	1.4	0.4	-0.3	-1.3	-1.47
5	-2.0	-3.0	-3.9	-4.6	-5.5	-6.1	-6.1	-5.0	-4.3	-3.2	-3.1	-2.3	-1.9	0.8	2.0	2.9	3.0	2.1	1.3	0.9	5.2	5.0	5.0	4.9	-0.75
6	4.6	4.1	3.8	2.9	2.9	2.8	1.7	1.5	2.6	5.1	6.6	8.0	8.7	9.4	9.1	8.5	7.7	6.6	4.2	3.1	2.7	2.0	1.4	1.1	4.63
7	0.9	0.8	0.7	0.5	0.1	0.0	-0.5	-0.2	0.2	1.3	1.9	2.2	2.4	3.4	3.3	3.3	2.6	1.3	-0.5	-1.0	-1.3	-1.8	-2.3	-2.6	0.61
8	-3.0	-3.3	-3.8	-4.4	-4.9	-5.6	-6.1	-6.4	-6.1	-5.7	-5.1	-4.2	-3.4	-2.4	-2.3	-2.3	-2.7	-3.3	-4.0	-4.5	-4.6	-4.6	-5.0	-4.9	-4.28
9	-5.2	-5.5	-5.7	-6.1	-6.4	-6.6	-6.8	-6.7	-5.9	-5.6	-5.1	-4.1	-3.5	-2.3	-2.2	-2.3	-2.9	-3.5	-4.6	-5.1	-5.3	-5.6	-6.0	-6.5	-4.98
10	-6.6	-7.0	-7.4	-8.0	-8.5	-8.7	-9.4	-9.6	-8.5	-5.8	-4.6	-3.8	-3.6	-2.8	-2.6	-2.7	-2.9	-3.8	-4.8	-5.6	-6.7	-7.3	-8.2	-8.8	-6.15
11	-9.6	-10.1	-10.4	-11.0	-10.9	-11.0	-11.0	-10.3	-8.3	-7.9	-6.7	-5.7	-5.0	-4.7	-4.4	-4.4	-4.4	-5.1	-5.9	-6.3	-6.8	-6.9	-7.0	-6.7	-7.52
12	-6.1	-6.1	-5.9	-5.9	-5.9	-6.0	-6.3	-5.6	-4.6	-3.4	-2.5	-1.4	-0.9	-0.2	-0.2	-0.5	-1.1	-2.1	-3.2	-3.8	-4.2	-4.9	-5.0	-5.8	-3.82
13	-7.0	-7.0	-8.0	-8.1	-8.7	-9.2	-9.2	-8.2	-7.2	-6.5	-5.7	-5.0	-4.0	-3.2	-3.3	-3.7	-3.9	-4.7	-5.7	-6.2	-7.2	-8.1	-9.0	-9.5	-6.60
14	-9.8	-10.3	-10.5	-10.5	-10.6	-10.8	-11.5	-11.8	-10.5	-9.0	-7.5	-6.5	-4.9	-4.0	-3.8	-4.1	-4.7	-4.9	-5.4	-5.9	-6.2	-6.9	-7.2	-8.0	-7.72
15	-9.0	-9.8	-10.5	-11.2	-11.5	-12.0	-11.8	-11.3	-10.4	-8.8	-6.4	-4.9	-4.2	-2.3	-2.1	-2.1	-2.5	-3.0	-3.8	-4.9	-5.8	-6.0	-6.3	-6.8	-6.98
16	-7.5	-7.4	-7.7	-8.9	-9.6	-9.6	-9.4	-8.8	-7.9	-7.1	-6.4	-6.2	-6.1	-5.3	-5.3	-5.2	-5.1	-5.1	-4.8	-4.7	-4.6	-4.1	-3.6	-3.3	-6.40
17	-3.3	-3.3	-3.5	-4.8	-4.9	-4.9	-5.1	-4.5	-3.5	-2.0	-0.4	0.9	2.3	3.8	4.8	4.7	4.4	3.6	1.6	0.0	-1.4	-1.8	-2.3	-2.7	-0.93
18	-2.7	-2.8	-2.8	-2.6	-2.6	-2.4	-2.2	-1.2	0.1	1.5	1.8	2.7	4.2	6.4	5.6	5.5	5.7	5.3	3.6	2.0	1.5	0.6	-0.1	-0.6	1.10
19	-1.0	-1.1	-1.1	-1.1	-1.1	-1.3	-0.6	0.8	1.6	2.8	3.7	4.1	5.4	6.4	5.8	7.1	8.1	7.7	6.2	5.4	4.2	3.3	3.4	3.1	2.90
20	2.1	0.7	-0.3	-0.6	-0.7	-1.5	-1.5	0.0	2.3	3.5	3.7	4.9	5.8	7.0	7.5	7.0	6.7	5.4	3.3	2.2	2.0	1.6	0.2	0.0	2.55
21	-1.0	-1.3	-2.3	-3.2	-3.6	-4.0	-3.8	-2.3	-0.9	2.2	4.2	5.2	5.7	5.9	6.4	6.0	5.2	4.7	2.4	1.1	0.0	-0.1	-0.6	-1.0	1.04
22	-0.9	-0.9	-1.1	-1.7	-1.7	-2.6	-2.5	-1.6	0.3	1.6	2.8	4.2	4.4	4.4	4.2	4.4	4.2	3.2	2.4	1.2	-0.3	-0.8	-1.6	-2.0	0.82
23	-2.7	-3.5	-4.2	-4.6	-5.2	-5.6	-5.7	-5.0	-3.3	-1.3	0.2	2.0	3.7	3.9	3.6	3.4	2.6	1.9	1.3	1.4	1.5	1.5	1.5	1.3	-0.47
24	1.3	1.4	1.4	1.4	1.3	0.7	0.4	0.2	0.3	0.5	0.5	0.7	0.7	0.8	0.8	1.0	1.5	1.3	1.4	1.2	1.0	1.0	1.1	0.9	0.95
25	0.8	0.8	0.7	0.8	0.7	0.9	0.7	0.8	1.0	1.2	1.5	1.6	1.6	1.6	1.1	1.2	1.5	1.4	1.4	1.3	1.4	1.1	1.2	1.3	1.15
26	1.3	1.2	1.5	1.4	1.2	1.2	1.5	1.7	1.8	2.7	3.6	4.7	5.2	5.9	5.9	5.6	4.9	4.2	3.2	2.1	0.6	0.2	-0.6	-1.2	2.49
27	-1.6	-2.3	-2.5	-2.9	-3.0	-3.5	-3.7	-3.0	-2.0	-0.9	0.6	3.4	4.7	5.8	5.9	5.7	5.2	4.4	3.4	2.7	2.4	2.2	1.8	1.6	1.02
28	1.3	1.1	1.1	0.8	0.4	0.1	0.1	0.8	1.2	1.2	1.2	1.4	1.8	2.4	2.4	2.2	1.9	1.3	0.4	0.1	-0.1	-0.7	-1.2	-1.9	0.80
29	-2.7	-3.0	-3.1	-3.4	-3.8	-3.8	-3.8	-3.6	-2.5	-0.4	1.2	2.6	3.8	4.5	4.9	4.5	4.1	3.2	1.4	0.3	-0.2	-0.7	-1.1	-1.9	-0.15
30	-2.2	-2.4	-2.1	-1.7	-1.6	-0.7	0.3	1.4	2.7	3.5	3.6	5.4	7.0	7.5	8.1	8.1	7.1	6.2	5.3	4.9	3.9	4.1	4.1	4.3	3.20
31	4.7	4.8	4.3	4.2	4.0	3.6	4.3	5.1	6.1	8.1	9.0	9.8	9.9	10.0	9.8	9.5	8.2	7.4	5.8	4.7	3.5	2.0	2.7	2.5	6.04
M.	-2.52	-2.80	-3.09	-3.46	-3.69	-3.92	-3.97	-3.41	-2.48	-1.33	-0.42	0.56	1.33	2.25	2.35	2.30	1.96	1.28	0.26	-0.43	-0.88	-1.29	-1.69	-2.04	-1.05

April.

Datum	1a	2a	3a	4a	5a	6a	7a	8a	9a	10a	11a	MT	1p	2p	3p	4p	5p	6p	7p	8p	9p	10p	11p	MN	Mittel
1	2.0	1.8	1.7	1.4	1.0	1.1	1.1	0.3	-0.1	-0.4	0.0	0.1	0.5	1.0	1.3	2.1	2.0	1.5	0.8	-0.5	-1.2	-2.1	-2.7	-3.3	0.39
2	-3.9	-4.3	-5.1	-5.7	-6.1	-6.2	-5.1	-3.2	-2.6	-0.8	0.7	1.6	2.8	2.8	2.9	3.0	3.1	3.1	3.6	3.6	3.6	3.5	3.4	3.3	-0.08
3	2.6	1.7	1.3	0.7	0.0	-0.4	0.0	0.8	1.5	2.0	2.6	3.2	3.5	4.2	4.1	3.8	3.5	3.2	2.7	1.9	1.7	1.6	1.1	0.9	2.01
4	0.7	0.6	0.6	0.5	0.0	-0.3	-0.3	0.9	2.2	3.4	4.5	6.1	6.5	7.4	7.6	7.7	6.6	5.1	4.1	3.5	2.8	2.4	2.2	1.7	3.19
5	1.6	1.4	0.8	0.8	0.5	0.3	0.7	1.8	3.3	4.9	5.2	5.9	6.8	7.4	7.2	6.9	6.2	5.5	3.8	3.1	2.5	1.8	1.4	0.8	3.36
6	0.1	-0.2	-0.3	-0.4	-0.8	-0.9	-0.2	2.0	3.7	6.2	7.9	9.6	10.6	11.1	11.4	11.0	9.9	9.2	7.5	6.0	4.1	2.5	3.3	0.7	4.75
7	0.2	-0.7	-0.9	-1.0	-1.4	-1.7	-1.2	0.1	1.8	5.2	8.2	9.8	11.7	13.4	13.6	13.4	12.1	11.3	9.6	7.6	4.8	3.8	2.4	1.4	5.15
8	0.5	-0.2	-0.5	-0.9	-1.3	-1.4	-0.9	0.7	2.9	6.4	8.8	11.7	13.1	15.1	15.1	14.8	13.9	13.1	10.4	8.7	5.9	4.7	3.6	2.7	6.12
9	1.3	0.5	-0.1	-0.3	-0.5	-0.1	0.1	1.4	3.8	6.1	8.3	11.5	13.8	15.2	15.5	15.5	14.6	14.1	12.8	10.3	7.8	6.2	5.0	3.3	6.92
10	2.7	2.5	1.8	2.2	2.9	3.0	2.2	3.4	5.5	8.8	11.4	12.6	14.0	15.5	15.5	15.6	14.6	14.1	11.9	11.0	8.8	6.8	5.9	5.3	8.25
11	3.4	3.1	2.2	1.7	1.4	1.1	2.0	4.0	6.2	8.9	10.8	13.8	15.9	16.7	16.8	16.8	15.3	14.4	12.7	10.6	9.0	7.1	5.8	5.0	8.53
12	4.1	3.3	2.3	1.6	1.3	2.0	3.1	4.9	8.0	10.7	11.7	12.8	16.6	17.7	17.8	17.4	15.7	14.3	12.5	10.1	8.9	6.7	5.8	4.8	8.92
13	4.3	3.8	3.0	2.1	1.8	1.3	1.9	4.1	5.7	8.5	9.7	12.3	14.0	15.0	14.4	14.5	14.2	13.5	11.4	10.0	8.4	7.5	6.3	5.9	8.07
14	5.4	5.1	6.0	5.7	5.6	5.7	5.8	6.1	6.0	6.3	6.5	8.4	9.4	9.2	8.8	8.7	7.8	6.8	6.2	6.1	5.7	5.5	5.5	5.5	6.58
15	5.6	5.5	5.5	5.7	5.7	5.6	5.6	6.0	6.1	5.9	6.0	6.8	6.2	6.9	6.9	6.6	6.3	6.3	4.9	4.5	4.3	3.9	4.2	4.5	5.65
16	4.5	4.4	4.5	4.0	4.0	4.1	3.8	3.8	3.7	5.3	6.6	6.9	7.9	8.1	7.4	6.4	6.8	6.6	6.0	5.3	4.3	3.1	1.9	1.3	5.03
17	0.9	0.5	-0.2	-0.6	-0.7	-0.6	0.2	0.7	2.6	5.7	7.7	9.8	11.2	11.3	11.0	11.0	10.7	9.9	8.5	7.4	6.7	6.1	5.6	5.4	5.45
18	4.8	3.8	4.1	4.1	4.2	4.2	4.2	5.2	5.3	6.8	7.0	8.1	8.4	8.4	7.5	8.1	8.2	8.0	7.2	6.7	6.2	5.8	4.9	3.9	6.05
19	3.1	2.2	1.7	2.1	1.9	2.0	3.0	4.9	6.6	8.6	10.4	11.1	11.5	11.6	11.6	11.6	11.3	11.3	10.7	9.8	8.5	7.6	5.6	5.3	7.25
20	4.7	4.4	3.5	2.6	2.5	2.6	4.4	6.1	7.9	9.8	11.1	12.2	13.2	13.4	13.8	13.9	12.3	10.5	9.5	8.6	6.7	5.8	5.5	5.0	7.92
21	4.9	4.5	4.3	4.4	4.2	4.4	5.0	6.2	6.8	6.9	8.5	9.8	10.4	11.2	11.3	11.3	11.2	10.8	10.1	8.9	6.9	5.1	4.3	3.2	7.28
22	2.3	2.1	1.4	0.9	0.6	0.7	1.9	4.1	5.2	7.2	9.3	11.2	11.8	11.2	9.4	8.5	8.1	7.4	6.8	6.4	6.3	6.1	5.9	5.7	5.85
23	5.6	5.5	5.5	5.5	5.5	5.7	6.2	6.6	6.6	6.6	6.7	6.7	6.7	6.9	7.1	7.1	7.3	7.4	7.3	6.3	6.6	6.6	6.5	6.4	6.45
24	6.1	6.0	5.6	4.7	4.4	4.3	4.4	5.6	6.8	8.4	9.2	10.2	10.9	12.1	11.8	10.8	9.4	7.6	6.5	5.7	4.0	3.9	4.0	4.0	6.93
25	3.7	2.4	2.5	2.2	2.2	2.6	3.3	4.1	6.1	6.2	6.2	8.1	8.6	9.5	9.5	8.4	7.6	7.1	6.7	5.7	5.5	5.1	4.6	4.3	5.51
26	4.1	3.2	3.2	3.3	3.4	3.5	3.5	4.4	5.5	7.1	8.1	8.8	10.0	11.6	11.9	11.9	11.5	11.5	10.5	9.7	7.7	6.9	6.2	5.2	7.20
27	4.8	4.0	2.5	2.4	2.5	3.7	6.6	8.8	9.9	10.4	11.1	11.8	12.3	12.6	12.4	12.4	12.2	12.1	10.7	9.7	8.3	7.5	6.9	6.1	8.40
28	5.2	4.6	4.1	3.5	3.6	3.7	4.3	5.6	6.4	8.5	10.8	12.0	13.0	13.9	13.7	13.5	12.9	12.4	10.8	9.7	7.9	6.8	5.9	5.7	8.27
29	5.9	5.9	5.9	5.9	5.9	6.3	7.4	8.1	8.2	9.7	11.5	10.9	9.9	10.7	11.0	11.2	10.7	10.7	9.9	9.0	8.5	7.5	7.1	6.5	8.51
30	6.4	6.2	6.0	5.9	5.9	6.1	6.5	7.9	8.0	8.5	9.0	9.2	8.7	8.5	7.9	6.8	6.9	5.9	4.4	4.0	3.7	3.3	3.2	3.0	6.33
.	3.25	2.79	2.43	2.17	2.01	2.08	2.65	3.85	4.99	6.59	7.85	9.10	10.00	10.65	10.54	10.36	9.76	9.16	8.02	6.98	5.83	4.97	4.38	3.78	6.01

H = 22 m
h_t = 21. m

φ = 59° 55′ N
λ = 10° 43′ E

Mai.

Datum	1a	2a	3a	4a	5a	6a	7a	8a	9a	10a	11a	MT	1p	2p	3p	4p	5p	6p	7p	8p	9p	10p	11p	MN	Mittel
1	2.6	2.4	2.2	1.5	**1.4**	1.4	2.2	3.4	4.1	4.9	6.9	8.2	9.9	10.8	11.4	**11.4**	11.0	10.5	9.4	8.1	6.9	6.0	5.2	4.0	6.08
2	3.4	2.7	2.4	**2.3**	2.4	2.9	5.3	8.2	8.6	8.7	9.1	**9.7**	9.4	7.2	6.4	6.2	5.7	5.5	4.9	4.4	4.4	4.6	4.8	4.8	5.58
3	4.8	4.9	4.8	4.7	4.9	4.9	5.3	5.7	5.8	6.4	7.2	8.1	8.1	8.8	9.0	**10.0**	10.0	9.4	8.4	7.5	6.6	6.2	5.0	**4.6**	6.71
4	3.9	2.9	2.4	2.3	**2.1**	2.9	3.9	5.8	8.9	10.8	12.0	13.3	13.9	14.6	**14.7**	14.6	13.8	12.6	11.2	9.2	8.0	7.1	6.4	6.4	8.49
5	6.2	5.6	5.2	5.0	**4.9**	4.9	5.0	6.7	7.3	9.8	10.7	12.1	13.9	14.8	15.0	15.1	**15.1**	14.8	14.0	12.9	12.3	10.9	10.3	10.2	10.14
6	10.2	10.2	10.3	10.1	9.8	9.8	9.9	10.7	11.4	13.8	15.4	15.7	16.2	**17.4**	17.3	17.2	17.0	16.2	15.5	13.0	11.9	11.2	10.7	**9.6**	12.94
7	8.8	8.6	8.1	**8.0**	8.0	8.1	8.2	8.7	9.0	9.0	9.0	9.2	9.6	9.9	**9.9**	9.6	9.6	9.5	9.4	9.2	8.8	8.7	8.6	8.4	8.91
8	8.2	7.6	7.5	7.4	**7.3**	7.3	7.3	7.5	8.0	8.3	9.4	10.1	10.2	**10.7**	10.7	10.6	10.4	10.3	10.0	9.8	9.6	9.2	8.8	8.6	8.95
9	8.2	8.2	8.1	**8.0**	8.2	8.4	8.7	9.0	9.0	9.1	9.4	9.4	9.8	10.4	11.1	11.1	**11.6**	11.6	11.5	11.5	11.3	10.1	9.8	9.6	9.71
10	9.5	9.4	9.2	8.7	8.2	**8.0**	8.4	8.9	10.2	12.2	13.0	14.0	14.2	15.8	**15.8**	15.5	14.5	13.9	12.7	11.3	10.4	9.6	9.5	8.7	11.32
11	8.2	7.9	**7.6**	7.6	7.9	8.3	8.8	9.3	9.2	9.6	9.6	9.7	9.8	9.8	9.8	9.8	9.8	9.8	**10.0**	10.0	9.9	10.0	8.3	8.4	9.13
12	8.9	8.9	8.3	**8.0**	8.0	8.1	8.2	8.4	8.5	8.9	10.3	10.3	11.6	12.9	13.2	**13.5**	12.5	11.5	10.6	10.1	9.8	9.4	9.2	9.1	9.92
13	8.9	8.6	8.5	8.4	8.0	7.9	8.3	9.5	9.0	8.7	9.6	9.6	9.6	9.4	9.4	10.1	11.1	**12.0**	12.0	11.4	10.5	9.5	8.7	**7.2**	9.41
14	6.2	5.7	4.6	**4.3**	4.6	5.2	6.4	8.6	9.2	10.4	12.1	13.5	14.5	15.2	15.8	15.9	**15.9**	15.0	14.4	12.9	11.7	10.7	10.6	9.8	10.55
15	9.3	8.5	7.7	6.7	**6.6**	6.9	8.4	10.7	12.4	14.2	15.1	16.0	16.9	**17.8**	17.7	17.7	17.7	17.3	16.5	15.6	13.5	11.9	11.1	10.2	12.77
16	9.0	8.1	7.7	7.4	**7.2**	8.5	10.9	12.1	13.4	14.7	15.9	16.6	17.3	18.5	18.6	**18.7**	18.4	17.6	16.2	15.1	13.6	12.5	11.8	10.8	13.36
17	10.0	9.6	9.5	**9.4**	10.0	10.7	11.5	13.0	14.0	15.5	16.2	16.8	17.2	18.3	18.8	19.1	**19.2**	19.0	18.2	17.2	15.5	14.6	12.8	11.8	14.50
18	10.9	10.6	9.9	**9.5**	9.6	10.7	11.8	13.7	16.6	17.9	19.2	20.4	20.6	21.7	**22.0**	21.6	21.0	20.5	18.9	17.0	15.8	14.5	13.0	11.9	15.80
19	10.7	10.0	9.2	**8.6**	8.9	9.5	10.6	12.9	14.9	16.6	19.6	20.6	21.5	**21.8**	21.8	21.5	20.4	19.1	17.5	16.3	14.5	13.4	12.2	11.1	15.13
20	10.1	9.4	8.7	**8.1**	8.2	9.2	10.4	12.0	14.5	16.5	19.4	20.4	21.9	23.5	**23.6**	22.4	21.5	20.7	19.0	16.8	15.0	13.5	12.8	11.7	15.39
21	12.4	13.0	11.9	11.1	10.1	9.4	8.9	9.0	10.4	11.2	12.2	13.2	13.4	14.0	14.4	**14.6**	14.3	13.3	12.5	11.4	10.2	8.6	8.1	**8.0**	11.48
22	7.5	7.3	7.3	**7.2**	7.2	7.3	7.7	8.4	9.4	10.3	11.3	11.3	12.3	13.0	12.2	12.3	**13.3**	13.0	12.5	11.9	10.3	10.1	9.9	9.5	10.10
23	8.5	8.0	7.3	6.6	6.4	6.4	6.9	7.9	8.3	8.3	8.6	8.9	8.9	8.8	8.4	8.9	**9.7**	9.2	8.2	7.6	7.1	6.4	6.2	**5.9**	7.81
24	5.8	5.7	5.6	5.4	**5.2**	5.3	5.4	5.4	5.4	5.5	6.0	6.4	6.5	7.1	**7.2**	7.0	6.9	6.7	6.6	6.5	6.4	6.5	6.5	6.5	6.15
25	6.6	6.5	**6.4**	6.5	6.5	6.8	6.9	7.1	8.4	8.7	9.4	9.5	9.5	9.9	**10.4**	10.4	9.9	9.4	8.9	8.5	8.2	8.2	8.3	8.5	8.31
26	8.4	8.2	**8.0**	8.1	8.1	8.1	8.2	8.5	8.6	9.0	9.3	9.4	9.8	9.6	9.6	10.0	10.1	10.3	**10.7**	10.3	9.8	9.3	9.2	9.2	9.16
27	8.7	8.2	7.6	**7.3**	7.7	8.3	9.2	10.1	10.2	10.4	10.7	11.3	11.4	12.2	**12.5**	12.5	12.4	12.4	12.5	12.5	12.5	12.0	11.6	11.6	10.66
28	**11.7**	11.8	12.1	12.4	12.5	12.3	11.9	12.1	12.0	12.2	12.1	12.0	12.3	13.4	13.6	13.7	13.9	**14.1**	13.8	13.6	13.7	13.3	13.2	13.0	12.78
29	12.9	12.9	12.9	12.9	12.9	12.9	13.0	12.8	12.7	13.0	13.2	13.4	13.7	**14.4**	14.3	13.8	13.7	12.9	11.6	11.3	11.2	10.8	9.9	**9.8**	12.62
30	9.8	9.8	9.6	**9.5**	9.7	9.9	10.6	10.8	10.8	11.0	11.3	11.1	10.7	11.0	11.2	11.5	**12.2**	12.2	12.1	11.6	11.4	10.8	10.6	10.3	10.81
31	10.1	9.6	**9.4**	9.4	9.6	10.2	10.9	11.7	12.2	13.3	13.8	13.8	13.9	13.2	**14.2**	13.5	13.3	12.9	12.4	11.9	11.4	10.9	10.3	10.2	11.75
M.	8.40	8.09	7.74	7.50	**7.49**	7.76	8.38	9.31	10.08	10.93	11.84	12.39	12.85	13.42	**13.55**	13.54	13.42	13.01	12.33	11.50	10.72	10.02	9.46	9.01	10.53

Juni.

Datum	1a	2a	3a	4a	5a	6a	7a	8a	9a	10a	11a	MT	1p	2p	3p	4p	5p	6p	7p	8p	9p	10p	11p	MN	Mittel
1	10.4	10.5	10.0	9.9	9.9	10.9	11.5	12.4	13.0	14.2	15.7	**16.7**	16.4	15.8	15.2	16.2	14.7	14.8	14.3	12.8	11.9	10.4	9.9	**9.6**	12.80
2	8.8	8.5	7.6	**7.5**	7.6	8.5	10.1	11.4	12.6	13.8	15.0	15.2	15.4	**16.0**	14.8	15.3	14.9	13.8	14.0	12.5	11.8	10.2	9.3	8.6	11.80
3	8.4	**8.0**	8.1	8.3	8.3	8.4	8.7	9.4	10.5	13.0	14.2	15.8	16.1	16.1	17.0	17.9	**18.3**	18.3	17.7	16.8	15.1	13.3	12.4	11.1	12.97
4	10.7	10.2	9.5	**9.0**	10.4	11.3	12.5	14.1	15.1	15.6	16.2	17.1	17.8	17.8	18.5	**19.4**	19.0	18.8	18.4	17.0	15.2	13.9	12.9	11.2	14.65
5	10.3	9.4	8.9	**8.6**	9.3	10.6	11.8	13.3	15.5	16.9	18.3	19.7	21.0	**21.3**	21.0	20.9	20.3	19.4	18.1	16.6	15.1	14.2	13.4	13.3	15.30
6	13.3	13.2	13.1	13.0	**12.9**	12.9	12.9	13.1	13.4	13.7	14.3	14.8	15.4	17.3	17.6	**19.1**	18.9	18.7	17.8	16.0	15.3	14.2	13.9	13.4	14.92
7	13.0	12.4	11.8	**11.3**	12.1	12.9	13.6	15.0	16.5	17.5	18.7	20.6	21.8	22.9	**23.4**	22.9	22.6	21.7	20.6	19.1	17.5	16.4	15.6	14.5	17.27
8	13.7	13.0	12.5	**12.1**	12.7	13.6	15.2	17.0	19.6	20.8	22.5	23.6	24.7	25.2	26.0	25.9	26.3	**26.3**	25.8	24.9	23.4	20.8	19.8	20.4	20.24
9	20.6	19.4	18.4	**17.0**	17.4	17.6	18.4	19.6	20.6	22.1	23.3	24.6	25.9	27.1	27.6	27.8	**27.9**	27.6	27.2	25.6	24.2	22.4	22.3	21.5	22.75
10	21.6	20.0	19.2	**18.5**	18.8	19.2	20.5	21.7	23.7	26.2	27.7	28.9	29.2	29.6	30.4	30.4	**30.4**	30.2	29.8	26.7	25.5	23.8	22.4	21.0	24.81
11	20.3	19.7	19.6	20.5	20.5	20.8	22.7	23.8	24.9	25.8	25.6	26.7	27.4	28.1	**28.3**	27.2	24.6	23.4	22.5	21.4	20.2	18.7	17.5	**16.4**	22.78
12	15.4	14.4	13.7	13.3	12.5	12.4	14.1	15.1	16.3	16.7	18.4	19.6	20.1	20.6	**20.8**	20.6	20.4	18.7	18.2	16.5	15.2	13.7	12.6	**11.8**	16.30
13	11.6	11.5	**10.5**	10.5	10.9	11.5	12.4	14.2	15.7	17.4	**18.0**	16.1	15.8	16.5	17.2	17.1	17.3	17.3	17.0	16.1	15.5	15.0	14.7	14.2	14.75
14	13.0	12.0	10.6	**9.9**	11.1	11.9	12.6	14.4	14.5	15.5	16.0	17.4	16.5	16.4	**17.8**	17.2	15.6	16.5	15.6	14.2	13.2	12.1	11.4	10.1	13.98
15	9.7	9.4	8.8	**8.7**	9.8	11.0	12.5	13.8	16.0	17.5	18.5	19.5	20.2	21.3	21.0	**21.8**	19.5	17.7	17.0	16.6	15.1	14.2	13.1	12.2	15.20
16	11.9	11.8	**11.4**	11.6	12.5	13.7	15.1	15.3	17.6	17.9	18.0	19.1	19.0	18.7	20.4	20.0	**20.6**	18.9	18.3	17.5	16.0	14.8	13.2	12.2	16.06
17	11.1	10.4	10.2	**9.9**	10.2	10.2	10.1	11.5	12.4	12.7	12.7	13.0	**15.1**	14.2	13.9	14.9	13.5	13.0	12.8	12.8	11.8	11.2	10.7	10.0	12.01
18	9.6	9.2	9.2	9.1	8.0	7.8	7.7	8.3	9.0	11.9	10.2	11.7	13.2	14.2	**15.3**	14.5	11.1	10.3	9.3	9.2	9.0	8.2	**7.5**	7.5	10.04
19	**7.8**	7.8	8.2	8.3	8.7	9.1	9.5	11.0	11.9	14.1	15.3	17.2	19.0	19.9	**20.2**	19.2	19.2	19.8	19.6	17.9	16.8	15.7	15.2	14.9	14.43
20	13.8	12.8	11.7	11.8	11.9	11.9	10.5	10.0	**9.3**	10.0	11.0	11.6	13.3	14.2	**15.6**	15.3	15.0	13.8	13.4	12.5	12.3	12.4	12.4	12.4	12.45
21	12.4	11.9	**11.8**	11.8	12.0	12.0	12.2	12.4	12.6	13.4	12.9	13.2	13.3	13.5	14.1	14.9	14.9	15.0	14.9	**15.0**	14.9	13.9	13.0	12.8	13.28
22	12.1	11.8	**11.7**	11.7	11.8	12.0	12.4	13.2	13.6	14.8	15.7	16.8	16.7	18.2	17.7	**19.7**	18.4	18.3	17.9	15.9	15.7	13.7	12.9	12.8	14.81
23	12.9	12.8	13.0	12.8	12.8	12.9	13.0	**12.3**	12.3	13.0	13.8	14.2	14.3	15.4	**15.9**	14.8	14.8	15.0	15.1	15.0	14.9	14.8	14.6	14.3	13.95
24	14.5	**14.4**	14.5	14.7	15.0	15.0	15.5	16.4	16.2	16.5	19.0	20.1	21.4	22.6	23.3	23.4	**23.4**	23.1	22.2	21.0	19.2	17.6	16.6	15.1	18.36
25	14.3	13.0	11.5	**11.4**	11.5	12.4	14.1	16.0	16.9	17.4	18.4	19.1	19.7	20.2	20.5	20.9	**21.0**	19.4	18.1	16.7	15.7	14.2	13.4	12.2	16.17
26	11.3	10.3	**9.8**	10.9	11.0	11.2	11.4	12.3	13.1	14.2	15.3	15.7	17.8	18.3	18.9	**19.3**	19.2	19.3	18.6	18.2	17.6	16.6	15.8	15.4	15.06
27	15.4	15.3	14.7	14.5	14.1	14.0	**13.9**	14.3	15.4	16.5	17.6	18.3	19.2	**20.0**	19.6	19.7	20.0	19.6	20.0	19.0	17.7	16.1	15.2	14.5	16.86
28	13.4	12.8	12.3	**11.5**	11.8	12.9	14.2	16.1	17.5	18.7	19.9	21.0	21.8	22.8	**23.7**	23.7	23.0	21.9	20.6	19.2	17.6	16.5	14.8	13.9	17.57
29	13.6	12.9	**12.5**	12.5	13.2	13.6	13.7	14.1	14.9	16.1	17.9	19.8	21.6	23.3	**23.7**	23.6	22.7	21.6	20.5	19.2	17.7	16.4	15.2	13.9	17.26
30	13.0	11.6	10.9	**10.5**	11.4	11.5	12.3	12.9	14.3	16.7	20.1	22.6	23.8	24.8	**25.3**	25.2	25.0	24.2	23.4	21.3	19.9	18.1	17.1	15.5	17.98
M.	12.93	12.35	11.86	**11.70**	12.00	12.46	13.17	14.15	15.16	16.35	17.34	18.32	19.10	19.74	20.16	**20.29**	19.75	19.21	18.62	17.44	16.37	15.12	14.29	13.56	15.89

H = 22 m
h_t = 2.1 m

φ = 59° 55′ N
λ = 10° 43′ E

Juli.

Datum	1a	2a	3a	4a	5a	6a	7a	8a	9a	10a	11a	MT	1p	2p	3p	4p	5p	6p	7p	8p	9p	10p	11p	MN	Mittel
1	14.2	13.5	12.6	**12.2**	12.3	14.0	15.5	16.6	19.7	21.5	23.7	26.0	27.4	28.0	28.4	28.6	**28.7**	27.3	26.6	25.0	23.5	22.0	21.1	20.2	21.19
2	19.7	18.6	17.4	17.2	17.1	**16.7**	17.1	19.0	19.9	21.2	22.4	23.6	24.5	25.6	26.2	**26.4**	26.2	25.3	24.0	23.0	21.4	20.0	19.0	18.0	21.23
3	16.7	15.3	**14.4**	14.4	15.2	16.5	18.1	19.7	21.1	22.1	23.0	23.8	24.6	**24.8**	24.5	24.3	23.9	23.5	21.5	18.8	15.4	14.8	14.8	15.3	19.44
4	**15.3**	15.4	15.5	15.6	15.9	16.2	16.4	17.2	17.2	17.8	18.3	18.5	19.0	20.1	**20.4**	20.0	19.5	19.1	18.8	17.8	17.7	17.7	17.4	17.1	17.66
5	17.1	17.1	**17.0**	17.0	17.0	17.8	18.6	20.2	21.0	22.3	23.4	24.1	22.9	25.5	**26.3**	25.4	25.4	25.1	23.9	23.2	21.8	20.5	18.9	18.0	21.23
6	17.3	17.4	17.3	**17.0**	17.1	17.1	17.3	17.1	17.4	17.3	17.5	17.3	17.4	18.3	19.0	19.5	19.5	19.6	**20.7**	20.6	19.1	18.4	17.7	17.4	18.10
7	16.8	16.6	15.9	**15.7**	15.7	15.8	16.3	16.9	17.6	17.8	19.6	20.1	21.8	22.5	**22.5**	22.5	21.2	20.8	19.6	17.9	17.3	16.7	16.6	16.5	18.36
8	16.5	16.2	16.1	16.0	16.0	16.3	17.5	17.9	18.3	19.2	19.6	20.1	21.2	**22.2**	21.1	18.9	18.2	18.1	18.0	17.5	17.0	15.8	15.9	**15.7**	17.89
9	15.7	15.6	15.3	15.1	14.8	14.5	14.6	15.4	16.2	17.2	18.0	19.2	19.5	19.8	20.1	20.3	**20.5**	20.3	19.8	18.3	17.1	15.8	14.9	**14.0**	17.17
10	13.3	13.1	12.2	**12.0**	12.1	13.2	15.1	16.3	17.2	18.1	18.8	19.5	19.6	20.5	**20.7**	20.6	19.9	19.1	17.0	15.8	14.5	13.8	12.6	12.1	16.13
11	11.1	10.8	10.0	**9.8**	10.7	11.0	12.1	13.8	15.1	17.1	17.9	19.0	19.1	20.5	**20.9**	20.9	20.2	20.0	19.8	19.0	18.8	17.6	17.1	16.5	16.20
12	16.0	15.4	14.1	**14.0**	14.0	15.0	16.4	18.0	19.0	19.7	20.8	21.1	22.1	23.2	23.7	23.8	**23.8**	23.6	22.6	20.6	19.6	18.9	17.7	17.1	19.18
13	16.3	15.4	14.9	**14.6**	15.3	16.3	16.6	17.6	18.8	20.5	22.3	23.7	24.8	25.6	**25.7**	25.0	24.5	23.6	22.0	20.2	18.6	17.1	16.4	15.7	19.65
14	**15.1**	15.2	15.5	15.6	15.7	15.8	16.7	17.9	19.0	20.7	22.6	24.1	25.0	**25.5**	25.3	25.1	24.4	23.1	22.0	20.7	19.6	18.2	17.4	16.7	19.87
15	**16.1**	16.2	16.7	16.5	16.2	16.2	16.2	16.4	17.3	19.0	21.0	22.4	24.2	25.5	**26.0**	25.4	24.5	23.7	22.7	21.4	20.0	18.9	17.9	17.2	19.90
16	16.3	15.7	**15.0**	15.0	15.2	16.5	17.2	18.4	20.1	22.2	23.6	24.9	24.1	23.4	**25.5**	25.5	25.2	24.0	23.1	21.8	20.1	19.2	18.5	17.5	20.33
17	17.0	15.9	15.4	**15.1**	15.5	16.5	17.6	19.0	20.5	22.5	23.8	25.1	25.7	26.3	**26.5**	25.8	25.6	24.9	24.2	22.5	21.5	20.4	19.2	18.5	21.04
18	17.2	16.4	15.5	**15.4**	16.3	17.4	19.0	20.2	20.6	20.5	20.5	22.4	24.2	25.2	25.6	26.0	**26.1**	25.6	24.7	23.4	22.2	20.1	18.9	17.6	20.88
19	17.4	17.3	**17.1**	17.1	17.8	19.6	21.4	22.4	22.9	24.5	26.0	27.1	28.4	**28.5**	27.7	28.4	28.2	27.7	26.5	24.9	23.5	22.4	20.9	19.9	23.23
20	19.1	18.4	17.7	**17.0**	17.1	18.0	19.0	21.2	22.6	23.7	26.1	27.8	29.5	29.7	**30.4**	30.4	29.7	29.7	27.9	25.7	24.5	23.2	21.8	20.7	23.79
21	19.9	19.0	18.3	18.3	**18.0**	18.8	20.7	23.0	25.0	26.5	28.2	29.3	30.2	31.8	32.2	**32.3**	32.1	31.3	29.3	27.2	25.8	24.2	22.9	22.0	25.26
22	20.9	20.1	19.1	**18.4**	18.5	19.5	20.5	22.0	24.1	25.9	28.4	29.6	31.4	32.6	**32.7**	32.5	31.4	30.1	28.6	26.2	25.2	23.9	23.0	21.8	25.27
23	20.9	19.8	19.2	18.7	**18.4**	19.1	20.4	21.7	23.6	25.6	27.8	29.8	31.4	**32.3**	32.2	31.5	30.7	29.5	27.7	26.1	24.8	23.2	22.2	21.3	24.91
24	20.5	20.1	19.3	18.7	**18.6**	19.3	20.5	22.2	24.0	26.0	28.1	29.1	**29.5**	29.5	29.5	29.3	28.4	27.7	26.2	25.0	23.2	22.2	20.6	19.8	24.05
25	18.3	17.5	16.8	16.1	**16.0**	17.2	18.6	20.8	22.8	24.7	27.2	28.4	**29.0**	28.6	20.8	23.3	23.4	25.1	25.1	24.1	22.7	22.3	21.8	20.8	22.14
26	20.2	19.8	20.2	20.2	20.2	20.9	21.9	22.6	24.6	26.6	27.8	26.9	26.3	**28.2**	26.7	23.1	19.7	19.0	18.7	18.1	17.9	17.6	17.5	**17.2**	21.75
27	**17.0**	17.1	17.2	17.3	17.8	18.2	19.2	19.6	19.7	19.3	**20.8**	19.9	19.6	19.2	20.1	20.3	20.0	19.6	19.0	18.0	17.9	17.8	17.8	17.6	18.75
28	17.4	16.8	16.2	15.8	**15.6**	15.8	16.0	16.9	18.0	18.3	18.6	18.5	19.4	**20.4**	20.2	20.1	20.3	20.0	19.2	18.3	17.7	17.1	16.1	15.8	17.85
29	14.8	14.5	13.9	13.7	13.7	14.7	15.5	16.7	17.6	17.2	17.8	16.8	14.6	14.6	14.9	16.1	**17.9**	15.8	14.8	14.3	14.1	13.8	13.8	**13.2**	15.20
30	12.9	12.4	**12.1**	12.1	12.3	13.0	14.4	15.8	16.7	17.9	18.8	20.2	21.2	**21.4**	21.2	20.4	19.8	18.6	16.4	15.7	14.5	14.0	13.7	13.3	16.20
31	13.5	13.4	13.0	**12.8**	12.8	13.1	13.8	14.7	15.9	17.0	18.0	**18.8**	18.4	16.2	16.5	18.5	18.0	16.0	15.7	15.2	14.8	14.3	14.3	13.9	15.36
M.	16.79	16.32	15.84	**15.63**	15.77	16.45	17.43	18.62	19.79	20.96	22.27	23.13	23.74	**24.37**	24.31	24.20	23.77	23.12	22.13	20.85	19.74	18.77	18.01	17.37	19.97

August.

Datum	1a	2a	3a	4a	5a	6a	7a	8a	9a	10a	11a	MT	1p	2p	3p	4p	5p	6p	7p	8p	9p	10p	11p	MN	Mittel
1	13.7	**13.6**	13.6	13.6	13.7	13.6	14.1	14.7	15.6	17.2	18.0	19.4	20.1	**20.4**	19.7	19.1	18.1	17.1	16.7	16.1	15.9	15.7	15.5	14.9	16.25
2	14.6	14.5	14.2	**13.5**	13.7	14.0	14.7	16.0	16.2	16.6	15.9	16.2	16.1	16.7	16.2	16.0	**17.5**	16.9	16.3	16.0	15.7	15.1	14.9	14.9	15.52
3	14.9	14.8	14.6	14.5	14.4	14.7	15.6	16.4	17.3	17.7	18.4	19.3	**20.2**	19.6	20.2	19.4	17.6	17.0	17.8	17.1	16.2	15.3	14.6	**13.7**	16.72
4	13.2	12.9	12.5	**11.9**	11.9	12.7	14.1	15.9	17.4	19.0	19.9	21.2	21.4	**23.0**	20.3	21.8	22.0	21.6	20.5	19.1	18.3	17.3	16.5	15.8	17.51
5	15.6	15.4	15.3	15.0	15.0	15.1	15.6	15.8	15.4	15.5	17.7	18.9	20.1	21.6	**22.1**	21.0	19.7	19.0	20.1	18.5	17.1	15.8	14.9	**14.2**	17.27
6	13.8	13.3	13.3	**13.1**	13.3	14.0	14.9	16.4	18.0	19.2	19.4	21.6	21.2	22.7	22.0	**22.9**	22.1	21.8	20.3	19.7	18.2	16.6	15.7	15.1	17.86
7	14.7	14.3	14.0	13.3	**13.2**	13.4	15.1	16.6	18.4	20.5	21.9	23.0	24.1	25.0	25.2	**25.5**	22.9	22.1	21.4	20.0	19.2	18.2	17.3	16.3	18.98
8	15.8	**15.2**	15.7	16.0	16.0	15.9	15.7	15.9	16.3	17.4	18.9	20.1	21.4	22.4	23.0	**23.3**	23.3	22.0	20.0	18.9	18.0	17.1	17.0	16.8	18.42
9	16.9	17.1	17.1	17.0	16.7	16.6	16.8	17.4	18.2	19.3	20.9	22.1	22.4	**23.1**	22.1	21.3	19.9	19.0	18.2	17.3	16.4	16.1	15.9	**15.4**	18.47
10	15.3	15.1	**14.9**	15.0	15.1	15.3	15.6	15.7	16.1	16.2	16.4	16.8	17.9	19.1	20.0	**21.2**	20.6	20.0	19.6	19.0	18.4	18.0	17.7	17.5	17.35
11	17.3	17.3	17.2	16.8	16.8	15.6	**14.5**	14.6	15.1	16.9	17.9	19.3	20.3	21.2	21.1	**21.3**	20.6	19.4	18.3	17.4	17.4	17.3	16.9	16.2	17.78
12	14.9	13.8	13.1	12.4	**12.0**	12.3	13.3	14.8	16.3	17.8	19.0	20.1	21.0	**21.6**	21.6	21.4	21.0	19.4	18.0	17.3	16.9	16.6	16.2	16.2	16.96
13	15.9	15.5	15.7	15.8	15.5	15.5	**15.4**	16.1	16.4	16.6	17.0	15.8	15.7	15.7	15.6	16.1	16.6	16.7	17.3	**17.4**	17.3	17.2	17.0	16.7	16.27
14	16.7	16.6	16.6	16.5	16.4	16.4	16.4	17.0	18.4	19.6	20.7	20.8	20.9	21.0	21.5	**21.5**	19.9	19.9	17.6	16.4	14.2	13.9	13.6	**12.7**	17.72
15	12.3	11.6	11.4	10.8	10.3	**10.0**	11.5	13.6	15.1	16.9	18.2	19.9	19.5	**20.2**	19.9	19.7	18.6	17.6	17.1	15.4	14.2	13.0	12.4	11.4	15.02
16	11.3	12.0	10.6	10.3	9.9	**9.7**	10.4	13.0	14.2	15.7	16.7	17.8	18.4	19.4	**19.5**	19.5	19.3	19.2	18.2	17.4	16.5	16.2	15.5	15.1	15.24
17	14.4	14.1	14.1	13.5	13.0	12.7	12.8	**12.2**	13.5	14.7	15.8	16.0	16.8	17.9	17.9	**18.6**	18.4	18.0	16.5	15.1	14.0	13.3	12.9	13.3	14.98
18	13.7	13.6	12.0	**11.9**	12.4	12.8	13.3	14.6	13.7	14.0	14.8	15.5	16.0	**17.4**	17.0	16.0	16.9	17.1	16.9	16.4	16.0	15.9	15.4	15.1	14.93
19	14.8	14.8	14.4	14.1	13.5	**13.0**	14.1	15.0	16.0	17.2	18.5	19.1	19.4	20.0	**20.3**	20.0	19.7	19.5	18.2	16.9	16.2	16.1	15.9	15.5	16.75
20	15.4	15.3	15.2	15.0	14.3	**13.6**	14.6	16.4	17.6	18.3	19.0	19.2	19.6	**20.4**	19.3	19.0	18.7	18.4	17.6	16.9	16.3	15.9	15.5	15.4	16.95
21	15.4	15.2	15.2	15.0	**14.6**	14.8	15.2	15.8	16.6	18.1	18.8	19.6	20.6	**21.8**	21.6	21.7	20.4	18.8	17.8	17.0	16.6	16.3	16.1	15.6	17.44
22	14.8	14.9	14.8	14.5	14.4	**14.3**	15.0	15.8	16.0	17.2	18.4	19.0	19.1	19.3	19.1	**19.9**	18.4	18.2	17.8	16.3	15.9	15.5	15.7	16.2	16.69
23	16.2	15.8	15.4	15.3	15.4	15.6	15.8	16.7	17.4	17.7	18.4	19.2	19.7	**21.5**	20.4	20.3	20.1	19.5	18.7	17.1	16.8	15.9	15.5	**15.1**	17.48
24	15.1	15.0	14.6	14.6	14.6	**14.4**	14.5	15.0	15.7	16.6	17.5	17.9	18.0	18.6	**19.0**	19.0	18.7	18.5	17.8	17.4	16.9	16.8	16.8	16.6	16.65
25	16.6	16.1	15.7	15.7	15.5	15.0	**14.7**	14.9	14.9	15.2	15.9	17.3	17.4	18.2	18.4	19.7	**20.0**	19.5	18.6	17.4	16.7	16.2	16.4	16.0	16.75
26	15.9	15.5	14.9	13.9	13.5	13.3	13.7	15.0	15.7	16.9	17.2	18.4	18.4	19.5	19.8	**20.2**	19.4	18.2	17.5	16.0	14.3	13.1	**13.0**	13.2	16.10
27	13.5	14.0	13.9	13.6	13.1	**13.0**	13.1	14.5	14.8	16.1	16.8	18.0	18.3	**19.8**	19.0	18.9	18.5	18.0	17.0	16.2	15.3	15.3	15.0	15.0	15.86
28	15.2	14.8	13.4	13.0	12.7	12.4	12.4	12.4	12.3	12.7	13.0	13.9	15.0	15.6	**16.4**	16.1	16.3	15.8	15.1	14.3	13.4	12.5	11.9	**11.1**	13.82
29	10.8	**10.3**	10.5	11.1	11.2	11.5	12.2	13.2	12.7	12.9	13.2	13.8	15.3	17.3	**17.4**	16.6	16.4	17.0	15.5	14.2	14.2	14.2	13.9	13.1	13.69
30	12.7	11.3	10.6	10.3	**10.2**	10.5	11.9	13.6	15.1	16.6	18.0	18.8	19.6	20.4	**20.5**	20.5	20.0	18.1	16.8	14.4	12.8	11.6	11.1	10.4	14.82
31	9.9	9.1	8.1	7.3	7.2	**7.1**	8.2	9.8	11.3	13.3	**14.5**	13.5	12.9	12.2	12.0	12.3	12.5	12.6	12.6	12.1	12.1	11.3	10.2	9.2	10.89
M.	14.56	14.28	13.95	13.69	13.53	**13.51**	14.04	14.99	15.73	16.76	17.64	18.44	18.93	**19.76**	19.62	19.67	19.16	18.58	17.80	16.80	16.05	15.46	15.06	14.64	16.36

H = 22 m
h_t = 2.1 m

$\varphi = 59^0\ 55'$ N
$\lambda = 10^0\ 43'$ E

September.

Datum	1a	2a	3a	4a	5a	6a	7a	8a	9a	10a	11a	MT	1p	2p	3p	4p	5p	6p	7p	8p	9p	10p	11p	MN	Mittel
1	8.2	8.0	7.7	7.7	7.0	6.8	7.3	9.6	12.1	13.4	15.3	15.7	15.9	16.3	16.7	16.0	16.1	15.6	14.8	13.6	12.5	11.4	10.0	9.2	11.95
2	9.0	10.0	10.7	10.0	8.9	8.2	9.8	10.6	13.0	14.6	14.7	15.2	15.5	16.0	16.1	15.8	15.3	14.2	13.3	12.7	11.1	10.6	9.7	9.3	12.26
3	9.4	8.1	8.0	7.0	6.5	6.3	8.2	10.4	11.4	12.8	14.2	15.6	16.5	17.6	17.7	15.6	14.6	14.9	14.0	12.2	10.3	9.0	8.2	7.9	11.52
4	7.2	6.8	6.2	5.9	5.3	5.1	6.1	9.0	11.2	13.3	14.0	15.7	15.8	15.8	15.5	14.4	13.4	11.6	10.5	9.4	9.2	9.2	8.7	8.1	10.31
5	7.9	7.9	8.0	8.0	7.7	7.6	8.2	9.6	11.2	12.8	13.2	14.3	14.2	14.8	14.1	13.9	11.3	10.7	9.9	9.0	8.2	7.9	8.7	8.1	10.30
6	9.1	8.3	8.3	7.6	7.3	7.1	7.5	9.2	10.8	12.6	13.5	14.2	14.4	14.8	14.3	14.4	14.2	13.5	12.1	10.8	10.1	10.1	9.1	8.3	10.90
7	7.8	7.4	7.3	6.6	6.6	7.2	7.8	9.6	11.3	12.9	14.6	14.6	12.3	13.7	13.5	12.7	12.4	11.3	10.5	10.2	10.0	9.9	9.3	8.5	10.33
8	7.8	7.6	7.7	8.1	8.0	7.8	8.8	10.7	11.8	13.9	14.9	15.5	15.8	16.0	16.2	16.0	15.8	14.8	13.6	12.6	11.9	11.5	10.9	10.6	12.01
9	10.7	10.3	9.9	9.8	9.8	9.8	10.3	11.7	12.2	13.6	14.7	15.0	15.6	16.7	15.5	15.2	15.0	14.0	13.0	12.5	12.2	11.8	11.8	11.6	12.61
10	11.8	11.5	11.4	11.1	11.1	11.0	11.1	11.7	12.1	12.2	13.1	13.7	14.6	15.0	13.6	13.6	13.3	13.0	12.4	12.1	11.9	11.0	10.5	9.5	12.18
11	9.6	9.6	10.0	9.7	10.1	10.2	10.3	12.0	12.4	12.4	12.5	13.9	14.2	15.1	15.0	14.3	14.5	13.4	11.4	10.3	9.6	9.1	9.0	8.7	11.55
12	8.5	7.4	7.1	6.2	6.1	5.6	6.8	9.3	11.0	12.7	13.9	15.0	15.5	16.6	16.8	16.0	14.7	14.0	11.6	9.8	8.6	8.3	7.7	7.3	10.69
13	6.5	5.7	5.4	4.7	4.5	4.1	4.7	6.4	8.2	10.3	12.1	14.0	15.2	16.6	16.9	16.7	16.1	14.2	12.6	11.6	10.7	9.5	8.8	8.0	10.15
14	7.5	7.0	6.5	6.0	5.6	5.1	5.2	7.0	8.9	9.9	11.8	13.4	15.1	16.8	16.7	15.7	14.9	14.0	13.0	12.4	12.4	12.3	11.8	10.7	10.82
15	9.8	9.2	8.5	8.0	7.9	7.9	8.5	9.9	11.1	12.6	14.0	16.0	16.7	18.9	19.2	19.2	18.3	16.1	14.7	12.9	11.7	10.6	9.6	9.0	12.51
16	8.4	7.9	7.3	7.4	7.3	7.1	7.5	9.3	11.2	12.4	14.2	15.6	17.1	18.6	18.7	18.5	17.7	16.2	14.1	13.1	12.1	10.9	10.0	10.7	12.22
17	11.0	10.9	10.8	11.0	11.1	11.2	11.4	11.7	12.0	12.8	14.2	16.4	16.5	17.2	17.0	16.3	15.4	13.5	12.6	12.0	12.0	11.6	11.4	11.2	12.97
18	10.6	11.4	11.7	12.1	12.0	11.9	11.2	11.8	12.3	13.0	13.4	13.9	15.1	15.2	15.1	12.2	12.2	12.2	11.4	11.0	10.9	10.7	10.6	10.6	12.19
19	10.4	10.3	10.2	10.2	10.1	10.1	9.9	9.9	9.8	9.9	10.1	10.6	11.0	11.3	11.3	11.5	11.4	11.4	11.4	11.4	11.3	11.2	11.3	11.5	10.73
20	11.2	11.2	11.4	11.4	10.9	10.6	10.7	11.1	11.2	11.2	11.3	11.6	13.2	13.1	14.1	13.4	13.2	12.5	12.0	12.1	11.7	11.4	11.3	10.7	11.77
21	10.6	11.0	11.2	10.8	10.9	10.9	11.3	11.5	11.7	12.3	13.2	13.7	14.5	15.4	15.0	14.7	13.7	11.6	11.1	10.7	10.1	9.8	9.7	9.2	11.86
22	8.7	8.3	8.5	9.1	9.6	9.8	9.8	10.8	11.5	12.0	12.6	13.5	14.5	15.3	15.4	14.1	13.2	12.3	11.6	11.2	10.8	10.8	10.7	10.5	11.44
23	10.3	11.0	11.1	11.1	11.1	11.1	10.3	10.4	11.1	12.2	14.2	14.6	15.5	15.5	13.3	12.7	13.2	12.9	11.8	11.4	11.5	11.6	11.6	11.3	12.12
24	10.8	10.8	10.7	10.6	10.4	10.3	10.1	10.6	10.8	12.3	13.6	14.6	14.9	15.3	15.1	14.1	13.6	12.7	11.8	11.2	10.6	10.5	9.7	9.2	11.85
25	8.5	8.1	7.9	8.0	8.1	8.2	8.2	8.3	8.6	9.4	10.4	10.7	12.2	13.6	13.9	13.6	12.7	12.2	10.4	9.7	9.3	8.5	8.0	7.6	9.84
26	8.0	8.3	8.4	8.3	8.2	8.2	8.2	8.3	8.3	8.9	9.3	9.4	9.5	10.0	10.5	10.3	9.6	8.1	7.3	7.0	6.3	6.2	5.5	5.2	8.22
27	5.2	4.7	5.0	5.4	6.1	6.4	6.6	7.1	7.5	7.6	8.4	8.9	9.6	10.4	10.6	10.2	9.5	8.3	7.4	6.9	5.9	5.9	5.6	5.2	7.27
28	5.2	5.3	5.5	5.5	5.9	6.2	6.4	8.2	10.0	11.6	12.4	13.5	14.1	15.0	14.8	13.0	12.8	11.5	9.6	7.9	7.4	7.6	7.7	8.0	9.38
29	8.8	9.2	9.8	10.0	10.4	10.4	10.3	10.5	10.7	11.0	10.9	11.1	11.6	12.2	12.4	12.5	12.5	12.4	12.2	12.2	11.9	11.4	10.5	9.6	11.02
30	8.2	7.2	6.3	5.8	5.1	4.7	4.9	5.1	6.0	7.5	8.7	10.7	11.7	13.0	12.9	12.3	11.3	9.8	8.7	7.7	6.9	6.0	5.7	5.2	7.98
M.	8.89	8.68	8.62	8.44	8.32	8.23	8.58	9.71	10.71	11.80	12.78	13.69	14.28	15.06	14.93	14.30	13.73	12.76	11.69	10.92	10.30	9.88	9.44	9.02	11.03

Oktober.

Datum	1a	2a	3a	4a	5a	6a	7a	8a	9a	10a	11a	MT	1p	2p	3p	4p	5p	6p	7p	8p	9p	10p	11p	MN	Mittel
1	5.2	5.2	4.9	4.6	4.4	4.3	4.6	6.1	8.8	11.0	12.6	14.8	15.8	17.1	17.0	16.5	16.4	15.5	14.5	13.7	12.5	13.2	12.2	11.9	10.95
2	11.9	12.0	11.7	11.5	11.7	11.6	12.3	13.2	13.7	14.7	15.7	17.9	19.5	19.9	19.7	18.8	17.2	15.1	13.8	12.8	12.6	12.0	12.2	12.0	14.31
3	11.9	11.9	12.1	12.0	12.1	12.1	12.0	12.8	13.1	13.5	14.4	14.4	14.4	15.7	14.4	13.6	13.0	11.6	9.6	8.6	7.8	6.6	6.0	5.6	11.63
4	5.6	4.8	4.0	3.8	3.5	2.9	2.8	4.0	6.5	8.1	9.2	10.2	10.6	11.1	11.2	11.0	9.9	9.1	9.0	8.9	8.7	8.9	8.8	8.2	7.53
5	8.2	8.0	8.0	8.3	8.4	7.1	7.9	7.8	8.4	9.2	10.2	10.9	11.2	11.9	11.9	11.0	10.1	8.0	6.3	4.9	3.8	4.2	4.6	4.6	8.12
6	4.7	4.6	4.4	5.0	5.2	4.5	4.6	5.7	7.1	8.3	9.5	9.8	11.6	13.7	13.9	14.2	13.2	11.9	12.0	13.5	12.6	11.4	10.6	11.3	9.30
7	10.4	9.6	8.2	6.6	6.3	5.4	4.8	5.8	7.7	9.4	10.3	10.9	11.4	11.7	11.4	10.6	10.3	9.0	7.3	5.5	5.1	4.6	4.5	3.9	7.95
8	2.9	2.3	1.4	1.3	0.9	0.4	0.3	1.1	2.4	4.3	6.5	8.5	9.7	10.4	9.8	8.6	7.8	6.4	6.2	3.8	3.1	3.2	3.5	4.2	4.54
9	5.2	6.5	7.0	7.3	7.7	7.6	7.7	8.2	8.5	9.7	10.9	14.0	15.0	16.4	16.5	15.5	13.9	12.9	12.0	11.6	11.1	12.0	12.4	11.5	10.88
10	10.7	10.9	11.1	11.1	10.5	8.6	7.7	7.8	10.0	13.0	13.0	13.5	13.3	10.7	10.3	9.1	7.7	6.7	5.9	5.2	3.9	3.7	2.3	1.3	8.67
11	0.6	0.0	-0.7	-1.0	-1.5	-1.5	-0.8	0.2	1.7	3.4	4.5	6.3	6.6	7.6	7.7	6.9	6.4	4.5	3.3	2.6	2.3	1.2	0.6	-0.5	2.52
12	-0.6	-1.3	-1.5	-1.9	-1.9	-2.2	-2.2	-2.0	0.0	2.5	4.3	6.2	7.0	7.3	7.0	5.9	5.0	3.6	1.8	0.7	-0.3	-0.9	-1.3	-1.5	1.40
13	-1.7	-1.7	-1.6	-1.8	-1.4	-1.3	-1.2	-0.5	0.0	1.0	2.4	3.1	3.4	5.0	4.2	3.4	3.0	1.7	1.1	0.9	0.7	0.1	0.1	0.7	0.82
14	0.6	0.7	0.8	0.3	0.3	0.1	0.0	0.4	1.0	1.8	2.6	3.3	3.3	3.8	3.2	1.3	0.8	1.2	1.4	1.5	1.4	0.5	0.3	0.1	1.28
15	-0.5	-0.6	-0.9	-1.7	-2.0	-2.1	-2.9	-2.8	-1.9	-0.6	1.2	3.1	4.1	5.8	5.7	5.3	4.4	2.9	2.5	1.7	1.6	0.5	-0.3	-0.5	0.92
16	-0.8	-1.4	-1.4	-2.5	-2.7	-2.8	-2.9	-2.5	-1.6	0.6	2.5	4.8	6.6	6.9	6.6	6.0	4.6	3.6	2.4	1.4	1.5	0.9	0.3	-0.8	1.22
17	-1.3	-1.6	-1.8	-2.0	-2.4	-2.9	-3.3	-3.2	-2.0	-0.1	1.4	3.2	4.3	4.4	4.3	3.7	2.6	1.6	0.4	0.1	-0.4	-0.5	-0.6	-0.7	0.13
18	-0.4	0.4	0.4	0.4	0.3	8.3	-0.3	-0.5	0.0	0.7	1.7	2.3	2.6	3.0	2.8	2.2	1.2	0.3	-0.6	-0.8	-1.1	-1.7	-2.5	-3.2	0.31
19	-3.4	-4.0	-4.6	-5.3	-5.4	-6.0	-6.4	-6.5	-3.9	-2.4	-0.4	1.1	2.7	3.6	3.5	2.6	2.0	0.1	-1.0	-1.8	-2.4	-3.2	-3.7	-4.2	-2.04
20	-4.6	-5.3	-5.5	-5.7	-6.2	-6.2	-6.2	-4.8	-4.8	-3.2	-1.1	0.5	2.1	4.2	4.2	3.7	3.2	1.8	0.6	-0.9	-1.8	-2.2	-2.8	-3.2	-1.84
21	-3.7	-4.1	-4.3	-4.5	-4.4	-4.2	-3.2	-2.7	-2.1	-1.0	0.0	1.1	1.9	2.8	2.8	2.6	2.3	2.3	2.4	2.3	2.2	2.3	2.3	2.2	-0.20
22	2.2	2.2	2.0	1.4	1.3	1.2	1.2	1.3	1.3	1.3	1.6	1.6	1.6	2.0	2.1	2.3	2.5	2.5	2.2	2.0	2.3	2.4	2.6	2.5	1.90
23	2.6	2.7	2.8	2.9	2.9	2.9	2.9	2.9	3.2	3.3	3.5	3.7	3.7	4.0	4.2	4.5	4.4	4.7	5.3	5.6	5.9	6.5	6.6	6.8	4.10
24	6.9	6.9	7.4	7.1	7.0	6.9	6.8	7.6	7.7	7.7	7.7	8.4	8.7	9.3	9.5	9.1	9.7	9.7	9.8	9.8	9.6	9.3	9.4	9.3	8.39
25	9.4	9.5	9.4	9.5	9.3	8.9	9.0	9.2	9.1	9.4	9.5	9.5	9.6	9.7	9.6	9.5	9.3	9.2	9.1	9.0	8.8	8.8	8.7	8.6	9.23
26	8.7	8.7	8.7	8.5	8.5	8.6	8.5	8.6	8.8	8.9	9.3	9.4	9.8	9.6	9.6	9.5	8.8	8.4	8.4	8.6	8.7	8.8	9.1	9.1	8.90
27	9.1	8.9	8.9	8.9	8.4	7.9	8.0	8.3	8.6	8.7	8.8	9.0	9.0	9.1	9.0	9.1	9.0	9.0	9.2	9.1	9.2	9.2	9.3	9.3	8.88
28	9.4	8.8	9.1	9.2	9.2	9.2	9.3	9.5	9.6	9.6	10.2	10.7	10.7	11.6	11.5	10.3	9.9	9.9	9.3	8.9	8.1	7.0	7.0	6.6	9.36
29	5.7	5.3	4.7	4.5	4.3	3.6	3.1	3.3	3.3	4.4	5.2	6.4	6.4	6.5	6.5	7.0	7.5	8.1	8.3	8.4	8.4	7.1	6.2	6.1	5.85
30	6.0	5.1	4.3	4.1	4.4	4.1	3.8	4.2	4.1	4.1	4.4	4.5	5.1	5.2	5.3	5.4	5.2	5.1	5.2	5.2	5.2	5.2	5.1	5.1	4.81
31	5.1	5.1	5.1	5.2	5.1	5.1	5.1	5.5	5.5	5.5	5.5	5.5	5.1	4.7	4.0	3.7	3.2	3.0	2.6	1.9	1.8	1.3	1.0	0.8	4.02
M.	4.06	3.87	3.68	3.45	3.35	3.04	3.00	3.48	4.32	5.38	6.36	7.37	7.99	8.54	8.37	7.84	7.24	6.43	5.82	5.31	4.93	4.59	4.34	4.10	5.29

H = 22 m
h_t = 2.1 m

$\varphi = 59^0\ 55'$ N
$\lambda = 10^0\ 43'$ E

November.

Datum	1a	2a	3a	4a	5a	6a	7a	8a	9a	10a	11a	MT	1p	2p	3p	4p	5p	6p	7p	8p	9p	10p	11p	MN	Mittel
1	0.8	0.7	0.4	0.1	0.1	0.0	0.0	-0.1	-0.2	-0.2	-0.2	0.0	0.0	0.0	-0.3	-0.5	-0.7	-0.7	-0.8	-0.9	-0.9	-0.9	-0.9	-0.9	-0.25
2	-0.8	-0.8	-0.8	-0.7	-0.7	-0.7	-0.7	-0.8	-0.8	-0.8	-0.8	-0.7	-0.5	0.1	0.3	0.3	0.3	0.4	0.7	0.7	0.7	0.9	1.1	1.3	-0.12
3	1.3	1.3	1.2	1.2	1.2	1.2	1.2	0.7	0.7	1.1	1.4	1.5	1.5	1.7	1.8	1.7	1.6	1.6	1.6	1.5	1.4	1.4	1.3	1.3	1.35
4	1.2	0.9	0.8	1.0	1.1	1.4	1.7	2.0	2.0	2.8	2.8	2.9	2.9	2.6	2.1	1.9	1.8	1.7	1.3	1.2	1.3	1.5	1.5	1.4	1.74
5	1.5	1.6	1.2	1.4	1.2	1.1	1.0	1.2	1.2	1.3	1.7	1.7	1.8	2.2	2.2	1.9	1.3	0.4	-0.2	-1.1	-1.4	-1.7	-2.0	-2.0	0.73
6	-1.9	-2.0	-2.3	-2.4	-2.9	-2.9	-3.3	-3.8	-3.8	-3.9	-2.5	-1.0	1.4	2.1	1.8	0.9	0.0	-0.5	-1.3	-2.2	-3.4	-4.0	-4.5	-4.4	-1.95
8	-4.4	-4.3	-4.7	-5.1	-5.5	-5.5	-5.5	-5.8	-5.8	-5.0	-4.3	-3.3	-2.6	-1.6	-2.0	-2.6	-3.7	-5.1	-6.1	-6.2	-6.7	-6.9	-7.6	-7.6	-4.91
7	-6.6	-6.0	-6.1	-6.9	-7.0	-6.9	-6.6	-6.4	-6.3	-6.3	-7.0	-7.5	-7.4	-7.2	-7.1	-7.2	-7.7	-8.7	-8.8	-8.9	-8.8	-8.8	-8.8	-8.7	-7.40
9	-8.8	-9.1	-9.1	-9.1	-9.1	-7.2	-6.4	-5.8	-5.4	-5.1	-4.6	-3.9	-3.6	-3.3	-3.4	-4.0	-4.8	-4.9	-5.0	-5.0	-5.0	-5.3	-5.5	-5.7	-5.80
10	-5.9	-5.9	-5.9	-5.9	-6.0	-6.2	-6.4	-6.6	-6.7	-6.4	-5.5	-5.0	-4.7	-4.0	-4.0	-4.5	-4.8	-5.2	-5.3	-5.3	-5.6	-6.4	-6.9	-7.0	-5.67
11	-7.1	-7.9	-8.2	-8.9	-9.4	-9.4	-9.6	-9.8	-9.3	-8.5	-6.7	-4.6	-3.3	-2.4	-2.6	-3.4	-4.5	-5.6	-6.0	-6.4	-6.5	-6.5	-6.6	-6.5	-6.65
12	-6.3	-6.5	-7.0	-7.5	-7.7	-7.7	-7.7	-7.6	-7.2	-6.6	-6.3	-5.7	-5.3	-4.9	-4.7	-4.4	-4.3	-4.1	-4.1	-4.1	-4.1	-4.5	-5.0	-5.3	-5.78
13	-5.5	-5.8	-6.1	-5.9	-5.5	-5.5	-6.2	-6.3	-6.3	-5.4	-4.7	-4.1	-3.9	-3.8	-3.9	-4.2	-3.7	-3.4	-2.7	-2.7	-2.7	-2.6	-2.4	-2.1	-4.39
14	-1.9	-1.9	-1.7	-1.7	-1.6	-1.5	-1.4	-1.0	-0.8	-0.5	-0.4	0.0	0.3	0.6	0.6	0.3	0.1	0.0	0.0	-0.1	-0.4	-0.5	-0.5	-0.6	-0.61
15	-0.7	-0.8	-1.1	-1.3	-1.5	-1.5	-1.6	-1.8	-2.0	-2.0	-1.3	-1.0	-0.7	-0.3	-1.0	-1.4	-2.2	-2.8	-3.6	-4.2	-4.8	-5.6	-5.8	-6.4	-2.31
16	-6.4	-6.3	-6.4	-6.5	-7.0	-7.1	-7.1	-6.6	-6.4	-6.0	-5.4	-5.3	-5.1	-4.8	-4.8	-4.8	-4.5	-4.1	-4.0	-4.0	-4.2	-4.9	-4.8	-4.3	-5.45
17	-4.2	-4.5	-4.9	-5.1	-4.9	-5.3	-5.4	-5.6	-5.5	-4.8	-4.1	-3.0	-2.7	-1.9	-2.3	-2.5	-3.0	-3.2	-3.5	-4.1	-4.8	-5.1	-5.6	-5.9	-4.25
18	-6.4	-7.0	-7.3	-6.6	-6.4	-6.3	-6.1	-5.6	-6.0	-5.8	-5.4	-5.1	-5.0	-4.2	-4.4	-4.6	-4.7	-4.8	-4.8	-4.9	-5.1	-5.3	-5.8	-5.9	-5.56
19	-6.1	-6.7	-6.6	-6.5	-6.3	-6.1	-5.8	-5.6	-5.6	-4.8	-4.4	-4.1	-3.8	-3.4	-2.8	-2.5	-2.4	-1.6	-1.3	0.2	1.7	3.3	3.7	5.0	-3.02
20	5.4	5.4	5.1	4.6	4.4	4.2	3.3	2.8	2.7	3.0	3.5	3.6	3.7	4.7	4.6	4.5	3.1	2.6	2.2	1.9	1.2	1.0	0.6	1.0	3.30
21	1.2	1.2	1.0	0.9	0.7	0.6	0.6	0.7	0.3	-0.5	-0.2	0.4	1.6	3.6	3.4	2.9	2.5	2.4	2.1	2.1	2.0	1.9	1.9	1.7	1.46
22	1.4	1.3	1.1	1.2	1.3	1.3	1.3	1.4	1.4	1.4	1.5	1.7	1.7	1.6	1.4	1.3	1.4	1.5	1.7	1.6	1.4	1.3	1.3	1.1	1.40
23	0.3	-0.1	-0.4	-1.2	-1.9	-2.0	-2.6	-3.2	-2.3	-2.2	-2.3	-2.0	-1.7	-1.2	-1.3	-2.0	-2.1	-3.0	-3.2	-3.8	-4.5	-5.1	-5.8	-6.1	-2.49
24	-5.4	-5.4	-5.3	-5.4	-6.2	-6.5	-6.7	-6.0	-4.1	-2.8	-1.5	-1.5	-1.4	-0.6	-1.0	-2.0	-2.6	-3.2	-3.8	-3.9	-4.0	-4.1	-4.7	-5.2	-3.89
25	-5.5	-6.0	-6.4	-6.9	-7.1	-7.3	-7.4	-7.5	-7.6	-7.6	-6.9	-5.8	-4.5	-2.8	-2.7	-3.5	-3.7	-4.3	-4.5	-4.8	-4.8	-4.8	-5.0	-5.3	-5.53
26	-5.5	-5.8	-6.0	-6.7	-7.0	-7.6	-7.8	-7.8	-8.0	-7.6	-6.6	-5.4	-4.4	-4.0	-4.0	-3.9	-3.7	-3.3	-2.6	-3.0	-2.6	-1.8	-1.1	-0.4	-4.86
27	-0.4	-0.7	-1.0	-1.3	-1.3	-1.4	-2.1	-2.3	-2.6	-2.8	-2.6	-2.4	-2.6	-2.6	-2.9	-3.3	-3.5	-3.5	-3.5	-3.6	-3.6	-3.7	-4.5	-5.5	-2.65
28	-6.2	-6.9	-6.9	-5.3	-5.2	-4.2	-3.5	-1.4	-1.2	-0.7	-0.6	-1.1	-1.5	-1.7	-1.9	-2.1	-2.5	-2.9	-3.8	-3.9	-3.9	-4.2	-4.9	-4.9	-3.39
29	-5.1	-5.3	-5.4	-5.4	-5.6	-5.8	-5.9	-6.2	-6.1	-6.1	-6.1	-6.0	-6.0	-5.9	-6.2	-6.5	-6.6	-6.7	-7.3	-7.4	-7.5	-7.5	-7.5	-7.7	-6.32
30	-7.7	-7.9	-8.4	-9.2	-9.8	-10.4	-10.5	-10.4	-10.8	-11.3	-11.5	-12.0	-12.1	-12.2	-12.3	-12.9	-13.4	-13.8	-14.6	-14.9	-15.1	-15.1	-15.1	-15.5	-11.95
M.	-3.19	-3.37	-3.57	-3.70	-3.85	-3.84	-3.91	-3.84	-3.75	-3.47	-3.03	-2.62	-2.26	-1.79	-1.91	-2.24	-2.57	-2.83	-3.04	-3.21	-3.36	-3.47	-3.66	-3.70	-3.17

December.

Datum	1a	2a	3a	4a	5a	6a	7a	8a	9a	10a	11a	MT	1p	2p	3p	4p	5p	6p	7p	8p	9p	10p	11p	MN	Mittel
1	-15.5	-15.6	-15.6	-15.8	-15.9	-15.9	-15.9	-16.0	-16.2	-16.3	-16.2	-15.9	-15.6	-15.4	-15.5	-16.1	-16.5	-16.9	-17.2	-17.4	-17.4	-17.4	-17.4	-17.5	-16.30
2	-17.4	-17.4	-17.4	-17.3	-17.2	-17.1	-17.1	-17.0	-17.0	-17.0	-16.2	-15.1	-13.5	-12.8	-12.7	-12.8	-13.2	-13.5	-13.7	-14.0	-14.3	-14.9	-15.2	-15.2	-15.38
3	-15.1	-15.0	-14.8	-14.8	-14.5	-13.8	-14.1	-14.0	-13.7	-13.4	-11.9	-10.4	-10.2	-9.9	-9.9	-9.9	-10.1	-10.5	-12.4	-12.4	-12.5	-12.6	-12.5	-12.4	-12.53
4	-12.4	-11.6	-11.1	-10.7	-10.7	-10.6	-10.5	-10.2	-10.5	-10.7	-10.9	-11.5	-11.5	-11.4	-11.1	-10.5	-10.4	-11.3	-10.6	-10.9	-10.4	-10.4	-10.4	-10.3	-10.86
5	-10.4	-10.4	-10.4	-10.3	-10.2	-10.0	-9.5	-9.0	-9.3	-9.2	-8.6	-7.9	-6.9	-6.5	-6.7	-6.7	-6.3	-6.2	-6.0	-6.0	-5.9	-5.5	-5.5	-5.5	-7.87
6	-5.3	-5.3	-3.5	-2.0	-1.1	-0.5	-1.1	-1.4	-1.3	-1.4	-1.0	-0.1	0.3	1.1	0.3	-0.3	-0.5	-1.2	-1.4	-1.6	-1.7	-2.4	-2.7	-3.5	-1.57
7	-4.3	-4.7	-5.6	-6.3	-6.6	-7.3	-7.6	-7.7	-7.5	-7.9	-7.2	-6.9	-6.5	-5.9	-6.0	-6.2	-6.5	-4.7	-4.3	-4.0	-2.9	-3.0	-3.1	-2.9	-5.65
8	-2.5	-2.2	-2.2	-2.0	-1.6	-1.4	-0.8	-0.5	0.1	0.5	0.6	0.7	0.9	1.1	0.9	0.8	0.6	0.4	0.2	0.1	0.0	0.0	-0.1	-0.1	-0.27
9	0.0	0.0	-0.2	-0.2	-0.3	-0.4	-0.5	-0.4	-0.5	-0.5	-0.5	-0.5	-0.4	-0.5	-0.6	-0.6	-0.5	-0.5	-0.2	-0.2	-0.2	-0.1	0.0	0.3	-0.31
10	0.7	0.9	0.9	1.0	0.9	0.7	0.5	0.6	0.2	0.3	0.4	0.1	-0.1	0.0	0.0	-0.1	-0.2	-0.2	-0.4	-0.7	-0.8	-0.8	-0.6	-0.6	0.11
11	-0.7	-0.6	-0.6	-0.5	-0.5	-0.4	-0.5	-0.7	-0.6	-0.2	-0.2	-0.2	-0.2	0.0	0.0	-0.1	-0.1	-0.1	-0.4	-0.5	-0.5	-0.7	-1.0	-1.4	-0.45
12	-2.1	-2.7	-3.5	-4.3	-5.0	-5.1	-4.9	-4.5	-4.6	-4.6	-4.5	-4.4	-4.2	-4.4	-4.7	-5.1	-5.2	-5.2	-5.4	-5.8	-6.2	-6.4	-6.7	-7.0	-4.85
13	-7.7	-8.0	-8.8	-9.2	-9.8	-10.1	-10.2	-10.2	-11.0	-11.3	-11.1	-10.9	-10.6	-10.4	-10.4	-10.5	-10.5	-10.4	-10.3	-9.1	-8.3	-8.2	-8.0	-8.0	-9.71
14	-7.7	-7.3	-7.3	-7.1	-7.1	-6.9	-6.8	-6.6	-6.6	-6.6	-6.6	-6.6	-6.6	-6.6	-6.9	-7.5	-8.3	-8.7	-9.5	-10.2	-10.3	-10.3	-11.3	-11.3	-7.95
15	-11.3	-11.3	-11.4	-11.7	-12.1	-12.1	-12.3	-12.8	-12.5	-12.2	-11.8	-11.6	-11.4	-10.8	-11.4	-12.1	-12.5	-13.4	-13.8	-15.2	-15.3	-15.5	-15.5	-16.4	-12.77
16	-16.8	-16.8	-16.2	-15.5	-14.7	-14.3	-13.5	-12.8	-12.6	-12.3	-12.0	-11.2	-11.2	-11.0	-11.3	-12.3	-12.5	-13.0	-12.8	-12.6	-12.3	-12.0	-11.7	-11.3	-13.03
17	-10.8	-10.7	-10.2	-10.1	-10.0	-9.3	-8.8	-7.6	-7.4	-7.4	-6.4	-5.1	-4.2	-3.2	-2.2	-4.1	-4.9	-5.1	-5.2	-5.4	-5.6	-6.3	-6.3	-6.6	-6.79
18	-6.2	-6.7	-6.9	-6.9	-6.9	-6.2	-7.7	-8.0	-8.0	-6.2	-5.2	-4.2	-3.5	-3.0	-3.3	-4.6	-4.3	-5.0	-5.0	-6.2	-6.8	-6.8	-7.6	-7.5	-5.90
19	-7.8	-8.2	-8.0	-8.1	-8.2	-9.3	-10.0	-10.6	-11.4	-11.4	-11.2	-10.8	-9.4	-8.4	-9.9	-10.4	-11.5	-12.6	-13.8	-14.7	-14.8	-15.6	-14.8	-15.6	-11.10
20	-15.6	-16.3	-16.1	-16.4	-16.4	-16.6	-15.8	-17.0	-17.3	-17.1	-17.2	-17.1	-16.5	-15.8	-15.7	-15.9	-16.1	-16.5	-15.8	-15.9	-15.8	-15.1	-14.7	-13.8	-16.10
21	-13.0	-11.5	-10.3	-9.2	-8.8	-8.7	-8.1	-7.4	-7.0	-6.9	-6.5	-6.3	-6.0	-5.9	-5.7	-5.3	-5.2	-4.9	-4.6	-4.7	-4.5	-4.3	-4.0	-4.0	-6.78
22	-3.9	-3.8	-3.6	-3.6	-3.6	-3.8	-3.6	-3.2	-3.3	-3.3	-3.5	-3.7	-3.9	-4.6	-5.3	-6.1	-7.3	-8.4	-9.2	-9.5	-9.4	-8.6	-8.7	-8.1	-5.50
23	-7.6	-6.8	-6.0	-5.8	-5.2	-5.0	-5.0	-4.6	-4.5	-3.6	-3.2	-3.4	-3.6	-3.2	-3.4	-3.6	-3.6	-3.6	-3.7	-3.7	-3.4	-3.4	-3.5	-3.8	-4.30
24	-4.2	-4.8	-5.2	-5.4	-6.6	-7.6	-8.1	-8.8	-9.5	-9.7	-9.6	-8.9	-8.6	-8.2	-8.5	-8.6	-9.0	-10.5	-11.0	-11.2	-11.8	-12.6	-12.9	-13.2	-8.94
25	-13.1	-13.0	-12.8	-12.9	-13.0	-13.4	-12.4	-11.8	-11.8	-11.6	-10.9	-10.6	-10.3	-10.0	-9.9	-9.9	-10.1	-10.5	-10.7	-11.2	-11.8	-12.5	-13.1	-13.2	-11.69
26	-13.7	-13.3	-13.0	-13.0	-13.6	-14.1	-14.8	-15.1	-15.5	-15.2	-14.9	-14.8	-14.5	-13.8	-14.4	-15.1	-15.2	-14.9	-15.0	-15.6	-15.9	-16.0	-16.1	-16.1	-14.73
27	-15.9	-16.4	-16.8	-16.9	-17.0	-17.0	-17.0	-16.0	-15.7	-14.8	-14.0	-13.5	-12.7	-12.0	-12.1	-11.3	-10.9	-10.6	-9.7	-10.0	-9.9	-9.1	-8.7	-8.0	-13.17
28	-7.7	-7.6	-7.3	-7.2	-7.0	-6.8	-6.4	-6.1	-5.9	-5.8	-5.5	-5.0	-4.6	-4.0	-4.0	-3.9	-3.8	-3.7	-3.4	-3.4	-3.4	-3.6	-3.6	-3.6	-5.14
29	-3.7	-3.5	-3.4	-3.4	-3.4	-3.3	-3.0	-2.4	-2.0	-1.5	-1.1	-0.7	-0.4	0.4	0.4	0.5	0.5	0.6	1.1	1.1	1.4	1.7	2.3	2.5	-0.80
30	2.7	2.7	3.2	3.0	2.7	2.7	2.6	2.3	2.7	2.8	3.0	3.6	3.8	3.9	3.7	3.3	3.0	2.8	2.6	1.9	1.0	0.3	-0.6	-1.0	2.45
31	-1.2	-1.8	-2.1	-2.8	-2.8	-3.0	-3.0	-3.6	-3.9	-4.2	-4.2	-4.2	-4.0	-4.2	-4.5	-4.9	-5.4	-5.3	-5.7	-5.8	-6.3	-6.4	-6.4	-6.0	-4.24
M.	-8.07	-8.05	-7.94	-7.92	-7.94	-7.95	-7.93	-7.84	-7.87	-7.70	-7.36	-7.00	-6.65	-6.30	-6.48	-6.74	-6.98	-7.21	-7.33	-7.57	-7.61	-7.69	-7.75	-7.78	-7.49

H = 95 m
h_r = 1.6 m

φ = 59° 40′ N
λ = 10° 46′ E

Januar.

Dat.	1a	2a	3a	4a	5a	6a	7a	8a	9a	10a	11a	12a	1p	2p	3p	4p	5p	6p	7p	8p	9p	10p	11p	Summe	Dauer in Stunden
1	-	-	-	-	-	-	-	-	-	-	-	-	0.0	0.0	-	-	-	-	-	-	-	-	0.9	0.9	2.5
2	2.5	2.6	1.6	1.8	1.8	2.2	1.0	-	-	-	-	-	-	-	-	-	-	-	-	1.9	3.0	1.2	0.2	19.8	10.5
3	0.1	0.0	0.1	0.0	-	-	-	-	-	-	-	-	-	-	-	-	-	-	-	-	-	-	-	0.2	3.5
5	-	-	-	-	-	-	-	-	-	-	-	-	0.0	-	-	-	-	-	-	-	-	-	-	0.0	1.0
6	-	-	-	-	-	-	-	-	-	-	0.0	-	-	-	-	-	-	-	-	-	-	-	-	0.0	1.0
9	-	-	-	-	-	-	0.0	0.6	0.4	0.3	1.1	0.4	0.0	1.1	0.7	0.9	0.3	-	-	-	-	-	-	5.8	11.0
13	-	-	-	-	-	-	-	-	-	-	0.0	-	-	-	-	-	-	-	0.1	-	-	-	-	0.1	1.5
14	-	-	0.0	0.1	-	-	-	-	-	-	-	-	-	0.4	0.0	-	-	-	-	-	-	-	-	0.5	3.0
18	-	0.0	-	-	-	-	-	-	-	-	-	-	-	-	-	0.0	0.0	0.0	0.0	-	-	-	-	0.0	4.5
23	-	0.0	0.0	-	-	-	-	-	-	-	-	-	-	-	-	-	-	-	-	-	-	-	-	0.0	2.0
28	-	-	-	-	-	-	-	-	-	-	-	-	-	-	-	-	-	0.1	0.2	0.1	0.0	0.1	0.2	0.4	1.1	7.0
29	0.1	0.1	0.2	0.1	0.1	0.0	0.1	0.1	0.0	0.1	-	-	-	0.2	0.7	0.6	0.4	0.4	0.4	0.2	0.2	0.6	0.2	0.2	5.0	20.5
30	0.3	0.5	0.2	0.5	0.0	-	-	-	-	-	-	-	-	-	-	-	-	-	-	-	-	-	-	1.5	5.0
31	-	-	-	-	-	0.1	0.2	-	-	-	-	-	-	-	-	-	-	-	-	-	-	-	-	0.3	2.0
Sum	3.0	3.2	2.1	2.5	1.9	2.3	1.3	0.7	0.4	0.4	1.1	0.4	0.0	1.7	1.4	1.5	0.7	0.5	0.7	0.3	2.1	3.7	1.6	1.7	35.2	75.0

Februar.

Dat.	1a	2a	3a	4a	5a	6a	7a	8a	9a	10a	11a	12a	1p	2p	3p	4p	5p	6p	7p	8p	9p	10p	11p	Summe	Dauer in Stunden
4	-	0.4	0.1	-	-	-	-	-	-	-	-	-	-	-	-	-	-	-	-	-	-	-	-	0.5	1.0
8	-	-	-	-	-	-	-	-	-	-	-	-	-	-	-	0.2	0.3	0.3	0.2	0.4	0.3	0.5	0.8	1.8	4.8	9.0
9	2.4	2.6	1.0	0.3	1.4	1.6	0.4	0.0	0.0	-	-	-	-	-	-	-	-	-	-	-	-	-	-	-	9.7	8.5
10	-	-	-	-	-	-	-	-	-	-	-	-	0.3	0.0	-	-	-	-	0.0	0.1	0.0	0.4	0.3	-	1.1	6.0
11	-	-	-	-	-	-	-	-	-	-	-	-	-	-	-	-	-	-	-	-	-	-	-	0.3	0.3	1.0
12	0.4	0.4	1.4	0.3	0.4	-	-	-	0.2	0.4	1.6	0.5	-	-	-	-	-	-	-	-	-	-	-	-	5.6	9.0
13	-	-	-	-	-	-	-	0.2	0.2	-	-	1.9	3.8	3.0	0.4	-	-	-	0.1	0.3	0.2	1.4	1.8	1.0	14.3	12.0
14	0.3	0.4	-	-	-	-	-	-	-	0.1	0.0	-	-	-	-	-	-	-	-	-	-	0.0	-	-	0.8	4.0
15	0.1	0.2	0.2	1.3	2.9	1.5	0.4	-	-	-	-	-	-	-	-	-	-	-	-	-	-	-	-	-	6.6	6.0
16	-	-	-	-	0.1	0.1	-	-	-	-	-	-	-	-	-	0.2	0.1	-	-	-	0.0	-	-	-	0.5	4.5
17	0.0	-	-	-	0.0	0.1	0.0	0.1	-	0.1	-	-	-	-	-	-	-	-	-	-	-	-	-	-	0.3	6.0
18	-	-	-	-	-	-	-	-	-	-	-	-	0.0	-	-	-	-	-	-	-	-	-	-	-	0.0	0.5
22	-	-	-	-	-	-	-	-	-	-	-	-	0.0	0.0	-	-	-	0.3	-	-	-	0.5	0.2	-	1.0	3.5
23	-	-	-	-	0.0	0.2	0.0	0.1	0.1	-	-	-	-	-	-	-	-	-	-	-	-	-	-	-	0.4	4.5
24	-	-	-	-	-	-	-	-	-	-	-	-	-	-	-	-	0.0	0.2	0.2	0.2	-	-	0.1	0.3	1.0	5.5
25	0.0	0.0	0.2	0.1	0.1	0.0	0.4	0.0	-	-	0.4	-	-	-	-	-	-	-	-	0.1	0.2	0.2	0.2	0.2	2.1	14.0
26	0.4	0.2	0.5	0.4	0.1	0.0	0.0	0.0	0.1	0.2	0.4	1.5	0.7	0.5	-	-	-	-	-	-	-	-	-	-	5.0	13.5
27	-	-	-	-	-	-	-	-	-	-	-	-	-	0.0	0.0	0.1	0.1	0.3	0.6	-	-	0.1	0.1	0.1	1.4	9.0
28	0.2	0.2	0.2	0.7	0.1	1.6	-	-	0.3	0.2	0.1	-	0.2	0.4	0.9	0.6	0.0	-	-	0.1	0.3	0.6	0.4	0.4	7.5	18.0
Sum	3.8	4.4	3.6	3.1	5.1	5.1	1.2	0.4	0.9	1.0	2.5	3.9	5.0	3.9	1.3	1.1	0.5	1.1	1.1	1.2	1.0	3.7	3.9	4.1	62.9	135.5

März.

Dat.	1a	2a	3a	4a	5a	6a	7a	8a	9a	10a	11a	12a	1p	2p	3p	4p	5p	6p	7p	8p	9p	10p	11p	Summe	Dauer in Stunden
1	0.2	0.4	0.4	0.1	0.1	0.0	0.1	0.4	0.5	0.1	0.1	0.2	0.5	0.3	-	-	-	-	-	-	-	0.2	-	-	3.6	15.0
2	-	-	-	-	-	-	0.0	-	-	-	0.0	-	-	-	-	-	-	-	-	-	-	-	-	-	0.0	1.0
5	-	-	-	-	-	-	-	-	-	-	-	0.2	-	-	-	-	-	-	-	-	-	-	-	-	0.2	0.5
9	0.0	0.2	0.2	-	-	0.2	0.1	-	-	-	-	-	-	-	-	-	-	-	-	-	-	-	-	-	0.7	4.5
16	-	-	-	-	-	-	-	-	-	-	-	-	0.0	0.0	-	-	-	0.1	0.2	0.2	0.4	0.3	0.2	-	1.4	7.0
17	0.4	0.6	0.5	0.1	0.1	-	-	-	-	-	-	-	-	-	-	-	-	-	-	-	-	-	-	-	1.7	5.0
24	-	-	-	-	-	-	0.1	0.1	0.2	0.1	0.2	0.5	0.5	0.4	0.8	0.1	0.4	0.8	0.4	-	-	-	0.0	0.2	4.8	13.5
25	0.4	0.2	0.6	1.0	0.2	0.4	0.5	0.5	0.5	0.2	0.2	0.4	0.4	0.6	0.4	0.3	0.2	0.7	0.3	0.2	0.4	0.2	0.5	0.5	9.8	24.0
26	0.1	-	-	-	-	-	-	-	-	-	-	-	-	-	-	-	-	-	-	-	-	-	-	-	0.1	0.5
27	-	-	-	-	-	-	-	-	-	0.0	-	-	-	-	-	-	-	-	-	-	-	-	-	-	0.0	0.5
28	-	-	-	-	-	-	0.4	0.5	0.3	0.0	-	-	-	-	-	-	-	-	-	-	-	-	-	-	1.2	4.0
30	-	-	-	-	0.2	0.0	-	-	-	-	-	-	-	-	-	-	-	-	-	-	-	-	-	-	0.2	1.5
Sum	1.1	1.4	1.7	1.2	0.6	0.6	1.2	1.5	1.5	0.4	0.5	1.3	1.4	1.3	1.2	0.4	0.6	1.6	0.9	0.4	0.8	0.7	0.7	0.7	23.7	77.0

H = 95 m
h_r = 1.6 m

φ = 59° 40′ N
λ = 10° 46′ E

April.

Dat.	1a	2a	3a	4a	5a	6a	7a	8a	9a	10a	11a	12a	1p	2p	3p	4p	5p	6p	7p	8p	9p	10p	11p		Summe	Dauer in Stunden
1	-	-	-	-	-	-	0.6	0.9	1.6	1.1	0.8	2.0	0.6	0.1	1.1	0.2	-	-	-	-	-	-	-	-	9.0	9.5
2	-	-	-	-	-	-	-	-	-	-	-	0.0	-	-	-	-	-	-	-	-	0.0	0.4	0.2		0.6	4.0
14	-	-	-	-	-	-	-	0.0	-	-	-	-	-	-	-	0.3	2.6	2.4	1.4	0.8	0.2	0.2	-	0.2	8.1	9.0
15	2.3	1.1	0.8	0.6	-	-	-	-	-	-	-	0.4	-	-	-	-	-	0.1	0.6	0.6	0.7	0.5	0.0	0.2	7.9	11.0
16	0.2	0.2	0.4	0.9	0.5	0.6	0.9	0.1	0.3	-	0.8	0.5	0.1	-	0.0	-	-	-	-	-	-	-	-	-	5.5	12.0
18	-	-	-	-	-	-	0.0	0.6	-	-	-	-	-	-	-	-	-	-	-	-	-	-	-	-	0.6	1.5
20	-	-	-	-	-	-	-	-	-	-	-	-	-	-	-	-	-	-	-	-	0.1	0.4	0.7	1.5	2.7	4.0
21	1.0	1.1	0.8	0.2	0.1	-	-	-	-	-	-	-	-	-	-	-	-	-	-	-	-	-	-	-	3.2	5.0
22	-	-	-	-	-	-	-	-	-	-	-	-	-	-	-	-	-	-	-	-	-	-	-	0.2	0.2	1.0
23	0.8	0.1	0.1	0.1	-	-	0.3	0.2	0.4	0.4	0.2	0.1	0.3	0.2	-	-	-	-	-	-	-	-	-	-	3.2	12.0
25	-	-	-	-	-	-	-	-	-	0.8	-	-	-	-	-	-	-	-	-	-	-	-	-	-	0.8	0.5
29	-	-	-	-	-	-	-	-	-	-	-	-	-	-	-	0.4	-	-	-	-	-	-	-	-	0.4	0.5
Sum	4.3	2.5	2.1	1.8	0.6	0.6	1.8	1.8	2.3	2.3	1.8	3.0	1.0	0.3	1.1	0.9	2.6	2.5	2.0	1.4	1.0	1.1	1.1	2.3	42.2	70.0

Mai.

Dat.	1a	2a	3a	4a	5a	6a	7a	8a	9a	10a	11a	12a	1p	2p	3p	4p	5p	6p	7p	8p	9p	10p	11p		Summe	Dauer in Stunden
2	-	-	-	-	-	-	-	-	-	-	-	-	0.4	0.6	1.4	1.2	0.9	0.7	1.0	1.5	0.6	1.0	0.6	0.3	10.2	12.0
3	0.2	-	-	-	0.2	1.0	-	0.2	0.0	-	-	-	0.0	-	-	-	-	-	-	-	-	-	-	-	1.6	5.0
7	0.2	0.4	1.8	0.4	-	-	0.2	-	-	0.2	-	-	-	0.0	0.2	0.8	2.4	1.4	1.2	2.1	0.6	1.2	0.9	1.0	15.0	16.0
8	0.1	-	-	-	-	-	-	-	-	-	-	-	-	-	-	-	-	-	-	-	-	-	-	-	0.1	1.0
9	-	-	-	-	-	-	-	-	-	-	-	-	0.1	-	-	-	-	-	-	2.2	2.2	0.2	-	-	4.7	2.5
11	-	-	-	-	-	-	-	0.4	0.8	0.6	0.6	0.3	0.2	-	-	0.7	0.0	1.2	0.5	0.1	0.0	-	-	-	5.4	11.5
12	-	-	-	-	-	-	0.2	0.8	0.8	-	-	-	-	-	-	-	-	-	-	-	-	-	-	-	1.8	3.0
13	-	-	-	-	-	-	-	-	-	-	-	-	0.0	0.2	-	-	-	-	-	-	-	-	-	0.0	0.2	2.5
14	0.0	0.0	0.1	-	-	-	-	-	-	-	-	-	-	-	-	-	-	-	-	-	-	-	-	-	0.1	3.0
17	-	-	-	-	0.3	0.3	-	-	-	-	-	-	-	-	-	-	-	-	-	-	-	-	-	-	0.6	1.5
23	-	-	-	-	-	-	-	-	-	-	-	-	-	-	0.1	-	-	-	-	-	-	-	-	-	0.1	1.0
24	-	-	-	-	-	-	0.8	0.4	0.2	0.4	0.8	1.0	0.4	0.2	0.2	0.0	0.2	-	-	-	-	-	-	-	4.6	11.0
25	-	-	-	-	-	-	-	-	-	-	-	-	-	-	0.2	0.0	0.3	0.7	1.2	1.4	0.9	1.1	1.0	0.1	6.9	10.0
26	0.7	0.8	1.0	1.3	1.2	0.8	1.0	0.9	0.4	0.6	0.8	0.4	0.0	0.2	0.1	0.1	-	-	-	-	-	-	-	-	10.3	15.0
27	-	-	-	-	-	-	-	-	-	-	-	-	-	-	-	-	-	-	-	-	-	0.8	0.3	0.0	1.1	2.5
28	1.1	1.6	0.7	2.5	1.4	2.2	2.0	0.8	1.3	1.0	0.9	0.7	-	-	0.5	0.8	0.7	-	-	0.0	2.2	2.6	1.0	0.5	24.5	19.0
29	0.4	2.1	2.0	1.4	0.2	-	-	-	-	-	-	-	-	-	5.1	2.6	0.2	0.2	-	-	0.4	0.4	-	-	15.0	10.5
30	-	-	-	-	-	-	-	-	0.0	0.2	0.4	0.6	0.8	1.6	0.2	-	-	-	-	-	-	-	-	-	3.8	7.0
31	-	-	-	-	-	-	-	-	-	-	-	-	0.3	-	-	-	-	-	-	-	-	-	-	-	0.3	0.5
Sum	2.7	4.9	5.6	5.6	3.3	4.3	4.2	3.5	3.5	3.0	3.5	3.0	2.2	2.8	8.0	6.2	4.7	4.2	3.9	7.3	6.9	7.3	3.8	1.9	106.3	134.5

Juni.

Dat.	1a	2a	3a	4a	5a	6a	7a	8a	9a	10a	11a	12a	1p	2p	3p	4p	5p	6p	7p	8p	9p	10p	11p		Summe	Dauer in Stunden
1	-	-	-	-	-	-	-	-	-	-	-	-	-	-	-	-	-	-	-	-	-	-	0.0	-	0.0	0.5
2	-	-	-	-	-	-	-	-	-	-	-	-	-	-	-	-	-	0.2	-	-	-	-	-	-	0.2	0.5
13	-	-	-	-	-	-	-	-	-	0.0	-	-	-	-	0.0	-	-	-	-	-	-	-	-	-	0.0	1.0
16	-	-	-	-	-	-	-	-	-	-	-	-	-	-	-	-	0.2	-	-	0.0	-	-	-	-	0.2	1.0
17	-	-	-	-	-	-	1.2	0.7	-	-	-	-	-	-	-	-	-	-	-	-	-	-	-	-	1.9	1.5
18	-	-	-	-	0.0	0.1	0.2	0.2	0.6	0.4	0.7	-	-	-	-	-	0.2	1.3	0.7	-	-	-	-	-	4.4	8.5
19	-	-	-	-	0.1	0.1	-	-	-	-	-	-	-	-	-	-	-	-	-	-	-	-	-	-	0.2	1.5
20	-	0.2	0.2	-	-	-	-	-	0.7	1.1	0.3	0.1	-	-	-	-	-	2.0	2.4	0.6	-	-	-	-	7.6	7.5
21	-	-	-	-	-	0.2	0.1	0.1	0.0	0.8	0.4	-	-	-	-	-	-	0.2	-	-	-	-	-	-	1.8	7.0
22	-	-	-	-	-	-	-	-	-	-	-	-	-	-	-	-	-	-	-	-	-	1.0	0.2	-	1.2	2.0
23	-	-	0.2	0.3	0.3	1.0	1.2	1.7	0.7	-	-	-	-	-	-	-	-	-	-	-	-	-	-	-	5.4	6.5
28	-	-	-	-	-	-	-	-	-	-	-	-	-	-	-	-	-	-	-	-	-	0.0	-	-	0.0	1.0
29	-	-	-	-	-	-	0.0	-	-	-	-	-	-	-	-	-	-	-	-	-	-	-	-	-	0.0	0.5
30	-	-	-	0.1	0.0	-	-	-	-	-	-	-	-	-	-	-	-	-	-	-	-	-	-	-	0.1	2.0
Sum	-	0.2	0.4	0.4	0.4	1.4	2.7	2.7	2.0	2.3	1.4	0.1	-	-	0.0	-	0.4	3.5	3.3	0.6	-	1.0	0.2	-	23.0	41.0

H = 95 m
h_r = 1.6 m

φ = 59° 40′ N
λ = 10° 46′ E

Juli.

Dat.	1a	2a	3a	4a	5a	6a	7a	8a	9a	10a	11a	12a	1p	2p	3p	4p	5p	6p	7p	8p	9p	10p	11p		Summe	Dauer in Stunden
3	-	-	-	-	-	-	-	-	-	-	-	-	-	-	-	-	-	-	0.1	0.6	0.3	-	-		1.0	3.0
6	-	-	-	-	-	0.4	0.6	3.4	2.0	1.4	6.5	3.6	-	-	-	-	-	-	-	-	-	-	-		17.9	6.5
8	-	-	-	-	-	-	-	-	-	-	-	-	-	-	13.4	1.5	0.1	0.6	-	-	-	-	-		15.6	4.0
10	-	-	-	-	-	-	-	-	-	-	-	-	-	-	-	-	-	-	-	-	-	-	1.4		1.4	1.0
25	-	-	-	-	-	-	-	-	-	-	-	-	-	-	-	-	0.0	-	-	-	-	-	-		0.0	0.5
26	-	-	-	-	-	-	-	-	-	-	-	-	-	-	-	5.1	7.2	-	-	0.6	3.8	2.4	1.0	1.6	21.7	6.5
27	-	-	-	-	-	-	-	2.7	0.2	2.3	1.6	10.4	1.0	4.4	-	-	-	0.3	0.2	1.8	0.2	1.0	0.0	-	26.1	11.0
28	0.2	-	-	-	-	-	-	-	-	-	-	-	-	-	-	-	-	-	-	-	-	-	-	-	0.2	1.0
29	-	-	-	-	-	-	-	-	-	-	0.6	2.6	-	0.0	-	0.4	1.6	0.6	0.0	-	-	-	-	-	5.8	6.0
30	-	-	-	-	-	-	-	-	-	-	-	-	-	-	-	-	-	-	-	-	-	-	0.7	1.0	1.7	1.5
31	-	-	-	0.0	0.1	-	-	-	-	-	-	-	-	-	-	-	-	-	-	-	-	-	-	-	0.1	1.5
Sum	0.2	-	-	0.0	0.1	0.4	0.6	6.1	2.2	3.7	8.7	16.6	1.0	4.4	13.4	7.0	8.9	1.5	0.2	2.5	4.6	3.7	1.7	4.0	91.5	42.5

August.

Dat.	1a	2a	3a	4a	5a	6a	7a	8a	9a	10a	11a	12a	1p	2p	3p	4p	5p	6p	7p	8p	9p	10p	11p		Summe	Dauer in Stunden
1	-	-	0.1	-	-	-	-	-	-	-	-	-	-	-	0.5	0.3	-	-	-	-	-	-	-	-	0.9	2.0
2	-	-	-	-	-	-	-	-	-	5.1	6.1	0.0	-	-	-	-	-	0.0	-	-	-	-	-	-	11.2	2.0
3	-	-	-	-	-	-	-	-	0.0	-	-	-	-	-	-	-	-	-	-	-	-	-	-	-	0.0	1.0
5	-	-	-	-	-	-	-	-	-	0.7	0.7	-	-	-	-	-	-	-	-	-	-	-	-	-	1.4	2.0
6	-	-	-	-	-	0.1	-	-	-	-	-	-	-	-	-	-	-	-	-	-	-	-	-	-	0.1	1.0
7	-	-	-	-	-	0.0	-	-	-	-	-	-	-	-	-	-	-	-	-	-	-	-	-	-	0.0	1.0
9	-	-	-	-	-	-	-	-	-	-	-	-	-	-	-	-	-	-	-	0.2	0.2	0.3	0.0	0.1	0.8	5.0
10	0.0	0.4	0.6	-	-	-	-	-	-	-	-	-	-	-	-	-	-	-	-	-	-	-	-	-	1.0	3.0
11	-	-	0.1	0.1	2.8	4.8	1.4	0.2	0.4	-	-	-	-	-	-	-	-	-	-	-	-	-	-	-	9.8	7.0
13	-	-	-	-	-	-	1.6	-	-	0.1	1.0	3.8	3.0	3.0	1.0	0.3	-	-	-	-	-	-	-	-	13.8	7.0
17	-	-	-	-	0.0	-	-	-	-	-	-	-	-	-	-	-	-	-	-	-	-	-	-	-	0.0	1.0
18	-	-	0.6	0.6	-	-	-	-	-	0.4	0.2	0.0	0.1	-	-	0.0	0.3	-	-	-	0.1	0.3	0.1	-	2.7	9.5
20	-	-	-	-	-	-	-	-	-	-	-	-	-	-	-	-	-	-	0.1	0.0	-	-	-	-	0.1	1.5
21	-	-	-	-	-	-	-	-	-	-	-	0.0	-	-	-	-	-	-	-	-	-	-	-	-	0.0	0.5
22	-	-	-	-	-	-	0.0	-	-	-	-	-	-	-	-	-	-	-	-	-	-	-	-	-	0.0	0.5
25	-	-	-	-	-	-	-	-	-	-	-	0.0	-	-	-	-	-	-	-	-	-	-	-	-	0.0	1.0
28	-	0.8	1.4	1.0	1.4	1.7	3.7	5.2	3.0	1.6	-	-	-	-	-	-	-	-	-	-	-	-	-	-	19.8	9.0
29	-	-	-	-	-	-	-	-	-	0.1	1.0	4.1	0.7	-	-	-	-	-	-	-	-	-	-	-	5.9	3.5
31	-	-	-	-	-	-	-	-	-	-	-	0.0	0.4	0.4	0.6	-	-	-	-	-	-	-	-	-	1.4	3.5
Sum	0.0	1.2	2.8	1.7	4.2	6.6	6.7	5.4	3.4	8.0	9.0	7.9	4.2	3.4	2.1	0.6	0.3	0.0	0.1	0.2	0.3	0.6	0.1	0.1	68.9	61.0

September.

Dat.	1a	2a	3a	4a	5a	6a	7a	8a	9a	10a	11a	12a	1p	2p	3p	4p	5p	6p	7p	8p	9p	10p	11p		Summe	Dauer in Stunden
3	-	-	-	-	-	-	-	-	-	-	-	-	-	-	-	-	-	-	-	0.0	0.0	0.0	0.0		0.0	4.0
4	0.1	0.0	0.1	-	-	-	-	-	-	-	-	-	-	-	-	-	-	-	-	-	-	-	-		0.2	2.0
5	-	-	-	-	-	-	-	-	-	-	-	-	-	-	-	-	-	0.3	0.0	0.1	0.0	-	-		0.4	3.5
6	0.0	0.0	0.0	0.1	0.0	0.1	-	-	-	-	-	-	-	-	0.0	0.1	-	-	-	-	-	-	-		0.3	7.0
7	0.0	0.0	0.1	0.0	0.0	0.1	-	-	-	-	-	-	-	0.6	0.2	-	-	-	-	-	-	-	-		1.0	7.0
8	-	0.0	0.0	-	-	-	-	-	-	-	-	-	-	-	-	-	-	-	0.0	-	-	-	-		0.0	2.5
9	-	-	-	-	-	-	-	0.0	-	-	-	-	-	0.2	-	-	-	-	-	-	-	-	-		0.2	1.5
10	-	-	-	-	-	-	-	-	-	-	-	-	-	-	0.2	-	-	-	-	-	-	-	-		0.2	0.5
14	-	-	0.0	0.0	0.0	0.1	0.0	-	-	-	-	-	-	-	-	-	-	-	-	-	-	-	-		0.1	5.0
15	-	-	-	-	-	-	-	-	-	-	-	-	-	-	-	-	-	-	-	-	-	-	0.0		0.0	1.0
16	0.1	-	-	-	-	0.0	0.1	-	-	-	-	-	-	-	-	-	-	-	-	0.0	0.0	0.1	-	-	0.3	6.0
18	-	-	-	-	-	-	-	-	-	-	-	-	-	0.4	-	-	0.2	0.6	0.0	0.7	0.6	0.1	0.0	0.7	3.3	7.5
19	0.5	1.6	0.6	0.0	0.0	0.1	0.0	0.3	0.2	2.1	6.5	1.3	0.5	0.0	-	0.6	-	-	0.3	0.3	0.2	-	-	-	15.1	15.5
20	0.1	-	-	0.5	6.2	2.4	2.0	3.2	5.0	1.8	1.0	2.0	0.2	-	-	-	-	-	-	-	-	-	-	-	24.4	10.0
21	-	-	-	-	0.5	0.4	0.4	0.0	-	-	-	-	-	-	-	-	3.1	4.5	3.0	-	-	-	-	-	11.9	6.5
22	-	-	-	-	-	-	-	-	-	-	-	-	-	-	-	-	-	-	-	-	-	-	-	1.0	1.0	1.0
23	0.0	0.2	-	-	-	1.0	4.0	4.4	2.6	0.1	-	-	-	-	0.7	0.7	-	-	-	-	-	-	-	-	13.7	9.0
25	-	-	-	-	-	0.2	-	-	-	-	-	-	-	-	-	-	-	-	-	-	-	-	-	0.0	0.2	1.5
26	0.0	-	-	-	0.0	-	-	-	-	-	-	-	-	-	-	-	-	-	-	-	-	-	-	-	0.0	1.5
28	-	-	-	-	0.0	0.1	-	-	-	-	-	-	-	-	-	-	-	-	-	0.0	0.0	0.0	0.1	-	0.2	5.5
29	-	-	-	-	-	-	0.3	0.1	-	-	1.0	0.4	1.2	0.8	0.4	0.6	0.4	0.4	-	-	-	-	-	-	5.6	10.0
30	-	-	0.0	0.0	0.1	0.1	-	-	-	-	-	-	-	-	-	-	-	-	-	0.0	-	-	-	-	0.2	4.5
Sum	0.8	1.8	0.8	0.6	6.8	4.6	6.8	8.0	7.8	4.0	8.5	3.7	1.9	2.0	1.5	2.0	3.7	5.8	3.3	1.1	0.8	0.2	0.1	1.7	78.3	112.5

H = 95 m
h_r = 1.6 m

$\varphi = 59^0\ 40'$ N
$\lambda = 10^0\ 46'$ E

Oktober.

Dat.	1a	2a	3a	4a	5a	6a	7a	8a	9a	10a	11a	12a	1p	2p	3p	4p	5p	6p	7p	8p	9p	10p	11p	Summe	Dauer in Stunden
1	-	0.0	0.0	0.0	0.1	-	-	-	-	-	-	-	-	-	-	-	-	-	-	-	-	-	-	0.1	4.0
3	-	-	-	-	-	-	-	-	-	-	-	-	0.0	-	-	-	-	-	-	-	-	-	-	0.0	0.5
6	-	-	-	-	-	0.1	0.2	-	-	-	-	-	-	-	-	-	-	-	-	-	-	-	-	0.3	1.5
8	-	-	-	-	-	0.0	0.0	-	-	-	-	-	-	-	-	-	-	-	-	-	-	-	-	0.0	2.0
9	-	0.1	0.3	0.0	-	-	-	-	-	-	-	-	-	-	-	-	-	-	-	-	-	-	-	0.4	2.5
14	-	-	-	-	-	-	-	-	-	-	-	-	-	-	-	0.2	0.3	0.0	0.0	-	-	-	-	0.5	3.5
22	-	-	-	0.8	0.9	0.3	0.6	0.4	0.6	1.2	1.2	1.3	0.8	0.6	-	-	-	0.6	1.0	0.2	0.4	-	1.0	1.4	13.3	17.0
23	0.9	0.3	-	-	0.0	0.2	0.7	0.5	0.6	0.5	0.5	0.6	1.0	3.4	5.6	2.4	2.0	1.2	1.5	1.0	0.2	-	-	-	23.1	18.0
24	-	-	-	-	0.1	0.2	0.2	0.4	0.6	0.0	0.4	-	-	-	0.4	0.2	0.1	0.1	-	-	1.8	2.6	3.4	0.0	10.5	14.0
25	0.1	0.1	0.2	0.0	0.6	1.2	0.4	0.2	0.2	0.2	0.8	2.4	0.6	-	-	-	-	0.1	0.0	0.0	0.8	-	0.3	-	8.2	16.0
26	0.2	1.2	0.0	-	-	-	0.3	-	-	-	-	-	-	-	-	-	-	-	-	-	-	0.7	0.3	0.2	2.9	7.0
27	0.9	1.4	0.1	0.6	0.5	0.2	0.4	1.2	1.2	1.2	0.8	1.3	2.4	0.6	0.5	2.1	0.1	1.3	1.4	0.2	0.0	1.7	1.1	0.0	21.2	23.5
28	0.0	0.2	0.0	0.2	3.8	1.6	2.2	1.8	-	-	-	-	-	-	-	-	-	-	-	-	-	-	-	-	9.8	7.0
29	-	-	-	-	-	-	-	0.1	0.0	-	-	0.2	0.4	0.6	0.7	1.2	1.8	2.4	0.9	-	-	-	-	-	8.3	9.5
30	-	0.0	0.1	-	-	-	-	-	-	-	-	-	0.2	0.5	0.5	0.4	0.6	0.4	0.2	0.1	0.0	0.0	-	-	3.0	11.5
31	-	-	-	-	-	0.1	0.2	0.2	-	-	-	0.3	0.2	0.1	0.1	0.5	0.2	0.0	0.2	0.2	0.2	0.4	0.8	0.3	4.0	16.0
Sum	2.1	3.3	0.7	1.6	6.0	3.9	5.2	4.8	3.2	3.1	3.7	6.1	5.6	5.8	7.8	7.0	5.1	6.1	5.2	1.7	3.4	5.4	6.9	1.9	105.6	153.5

November.

Dat.	1a	2a	3a	4a	5a	6a	7a	8a	9a	10a	11a	12a	1p	2p	3p	4p	5p	6p	7p	8p	9p	10p	11p	Summe	Dauer in Stunden
1	0.4	0.8	0.7	0.8	0.9	0.5	0.7	0.8	1.0	1.3	0.8	0.7	0.7	1.0	1.8	0.8	1.4	1.0	0.6	0.4	0.4	0.7	0.1	0.3	18.6	24.0
2	0.3	0.4	0.5	0.1	0.1	0.1	0.0	0.1	0.2	0.2	0.1	0.2	0.2	0.0	0.2	0.2	0.2	-	0.0	-	-	-	-	-	3.1	17.5
3	-	-	-	-	-	-	0.1	0.9	0.2	0.3	0.2	0.1	0.0	0.1	-	-	-	-	-	-	-	-	-	-	1.9	7.5
6	-	-	-	-	-	-	-	-	0.0	-	-	-	-	-	-	-	-	-	-	-	-	-	-	-	0.0	0.5
7	-	-	-	-	-	-	-	-	-	-	-	-	-	-	-	-	-	-	-	-	-	-	0.0	0.0	0.0	1.5
8	-	-	-	-	-	-	-	-	0.0	-	-	-	-	0.0	-	-	-	-	-	-	-	-	-	0.0	0.0	1.5
13	-	-	-	-	-	-	-	-	-	-	-	-	-	-	-	-	-	-	-	-	0.1	0.1	-	-	0.2	1.0
14	-	-	-	-	-	-	-	-	-	-	-	-	-	-	-	-	0.1	-	0.1	0.1	0.4	0.1	0.0	0.1	0.9	7.0
16	-	-	-	-	-	-	-	-	-	-	-	-	-	-	-	0.1	0.7	0.8	-	-	-	-	-	-	1.6	2.5
21	-	-	-	-	-	-	-	-	-	-	-	-	-	-	-	-	-	-	-	-	0.0	0.3	0.1	0.3	0.7	3.5
22	0.3	0.0	-	-	-	-	-	-	-	-	-	-	0.0	-	-	-	-	-	-	-	-	0.0	-	-	0.3	3.5
23	-	-	-	-	-	-	-	0.0	-	0.1	-	-	-	-	-	-	-	-	-	-	-	-	-	-	0.1	1.0
24	-	-	-	-	-	-	-	-	0.0	-	-	-	-	-	-	-	-	-	-	-	-	-	-	-	0.0	0.5
26	-	-	-	-	-	-	-	-	-	-	-	-	-	-	-	-	-	-	0.0	-	0.2	0.3	0.3	0.5	1.3	4.0
27	0.3	0.4	0.5	0.6	0.3	0.4	0.1	0.1	-	-	-	-	0.1	0.0	-	-	-	-	-	-	-	-	-	-	2.8	9.5
28	-	-	-	-	-	-	0.2	1.3	0.2	0.1	-	-	-	0.0	0.0	-	-	-	-	-	-	-	-	-	1.8	5.0
Sum	1.3	1.6	1.7	1.5	1.3	1.0	1.1	3.2	1.6	2.0	1.1	1.0	1.0	1.1	2.0	1.1	2.4	1.8	0.7	0.5	1.1	1.5	0.5	1.2	33.3	90.0

December.

Dat.	1a	2a	3a	4a	5a	6a	7a	8a	9a	10a	11a	12a	1p	2p	3p	4p	5p	6p	7p	8p	9p	10p	11p	Summe	Dauer in Stunden
9	0.0	0.1	0.2	0.2	0.2	-	-	-	-	-	-	-	0.4	1.4	1.3	0.7	0.8	1.4	1.2	0.2	0.8	0.4	0.2	0.0	9.5	16.0
10	0.2	0.0	0.4	-	-	-	-	0.0	0.4	0.0	0.0	0.0	0.1	-	-	-	0.1	-	0.4	0.4	0.3	1.1	0.4	0.2	4.0	14.5
11	0.6	0.2	1.1	0.9	0.1	0.1	0.2	0.6	-	-	0.0	0.2	0.2	0.2	0.2	0.0	-	-	-	-	-	-	-	-	4.6	13.5
12	-	-	-	-	-	0.0	0.0	0.2	0.2	-	-	-	-	-	-	-	-	-	-	-	-	-	-	-	0.4	3.5
14	0.1	-	-	-	0.0	-	-	-	-	-	-	-	-	-	-	-	-	-	-	-	-	-	-	-	0.1	1.0
16	-	-	-	-	-	-	-	0.3	0.5	0.1	-	-	-	-	-	-	-	-	-	-	-	-	-	-	0.9	3.0
21	-	-	-	-	-	-	-	0.2	0.0	0.2	0.3	0.1	0.2	0.2	0.2	0.4	0.2	0.2	0.3	0.1	0.0	0.1	0.6	0.3	3.6	17.0
22	0.2	0.1	0.1	0.2	1.8	2.4	1.4	1.4	0.6	0.7	0.1	-	-	-	-	-	-	-	-	-	-	-	-	-	9.0	10.5
23	-	0.7	0.3	0.0	0.6	0.7	0.9	0.5	0.2	-	-	0.2	0.3	0.2	1.2	1.8	1.2	1.8	0.6	0.7	0.1	-	-	-	12.0	17.5
27	-	-	-	-	-	-	-	-	-	-	-	-	-	-	0.3	0.9	0.8	0.0	0.1	0.3	0.3	1.1	1.5	1.1	6.4	9.0
28	1.0	0.9	0.3	0.2	0.8	1.0	1.0	1.0	0.5	0.3	-	0.2	-	-	-	-	-	-	-	-	-	-	0.2	-	7.4	11.5
29	-	-	-	-	-	-	-	0.0	0.2	0.4	1.2	1.4	1.2	2.0	0.4	0.2	0.2	0.2	0.2	0.4	1.0	0.9	0.4	0.0	10.3	16.0
30	0.8	0.2	-	-	-	-	-	-	-	-	-	-	-	-	-	-	-	-	-	-	-	-	-	-	1.0	2.0
Sum	2.9	2.2	2.4	1.5	3.5	4.2	3.5	4.2	2.6	1.7	1.6	2.1	2.4	4.0	3.6	4.0	3.3	3.6	2.8	2.1	2.5	3.6	3.3	1.6	69.2	135.0

Aas. Meteorologisches Observatorium. **1925.** Luftelektrisches Potentialgefälle in 10 Volt/Meter.

H = 95 m

h_k = 4.5 m

Perturbierte Stunden sind mit p bezeichnet. Normaltage sind fett gedruckt.

Januar.

Datum	1a	2a	3a	4a	5a	6a	7a	8a	9a	10a	11a	12a	1p	2p	3p	4p	5p	6p	7p	8p	9p	10p	11p	Mittel
1	6	7	7	7	8	8	11	12	14	12	12	14	14	14	15	15	15	14	17	18	15	12	8	+p	
2	±p	±p	±p	±p	±p	—p	—p	±p	14	12	12	12	10	12	14	12	12	13	12	10	±p	±p	0	2	
3	**7**	**6**	**6**	**7**	**8**	**10**	**12**	**12**	**14**	**18**	**16**	**19**	**20**	**20**	**21**	**24**	**22**	**19**	**22**	**24**	**22**	**17**	**15**	**16**	**15.7**
4	12	11	10	10	12	13	16	14	14	15	17	20	22	16	23	20	26	32	50	56	62	39	28	26	
5	23	23	23	20	20	18	32	36	39	40	28	30	31	30	23	15	18	12	18	22	15	18	14	12	
6	8	7	4	4	7	7	12	25	34	24	12	15	22	20	16	15	14	16	15	18	15	18	15	12	
7	**15**	**19**	**12**	**12**	**12**	**12**	**14**	**14**	**15**	**15**	**16**	**18**	**23**	**24**	**24**	**32**	**32**	**20**	**16**	**15**	**15**	**14**	**12**	**10**	**17.1**
8	**15**	**11**	**10**	**10**	**8**	**8**	**15**	**18**	**22**	**20**	**18**	**20**	**22**	**20**	**16**	**15**	**12**	**10**	**20**	**15**	**10**	**16**	**13**	**13**	**14.9**
9	10	9	6	7	6	—8	—50	0	2	±p	—p	13	—14	—p	—p	—p	—20	14	14	16	18	17	14	10	
10	**10**	**10**	**10**	**14**	**12**	**14**	**14**	**26**	**31**	**28**	**29**	**26**	**22**	**23**	**28**	**28**	**26**	**19**	**18**	**26**	**24**	**23**	**21**	**21**	**21.0**
11	**23**	**18**	**15**	**15**	**16**	**18**	**16**	**18**	**16**	**15**	**23**	**24**	**20**	**24**	**12**	**16**	**14**	**14**	**15**	**11**	**14**	**14**	**11**	**9**	**16.3**
12	8	10	8	11	8	9	14	19	24	30	21	23	19	21	22	+p	+p	+p	+p	+p	+p	+p	+p	24	
13	24	19	15	15	16	17	18	15	12	10	8	10	8	10	23										
14													2	2	3	5	2	3	4	5	7	7	9	8	
15	8	6	7	7	7	8	8	16	16	22	24	20	16	19	16	12	9	9	8	12	12	9	9	8	
16	6	8	7	6	8	12	12	12	14	15	17	17	18	18	18	16	17	16	14	14	14	10	10	9	
17	8	8	8	8	8	8	12	12	15	15	14	15	16	15	18	18	17	20	20	22	20	22	14	11	
18	11	12	14	16	18	15	16	21	21	21	22	22	22	23	22	23	23	24	26	20	13	11	13	14	
19	12	8	6	6	5	6	8	8	7	9	10	12	14	12	10	12	9	11	14	24	24	16	12	10	
20	12	8	6	7	7	11	8	18	28	24	29	27	30	31	32	35	30	25	31	38	29	46	39	48	
21	45	36	40	36	29	39	24	46	46	36	34	39	38	28	30	21	30	31	44	40	60	47	44	38	
22	**30**	**18**	**15**	**15**	**15**	**15**	**18**	**16**	**16**	**15**	**12**	**15**	**22**	**16**	**14**	**14**	**22**	**28**	**24**	**20**	**26**	**30**	**20**	**21**	**19.0**
23	14	14	8	8	6	7	7	6	8	8	8	10	12	13	8	14	14	15	8	12	10	6	7	8	
24	7	2	5	4	9	3	4	0	8	14	14	9	6	8	11	14	14	16	14	16	16	14	16	16	
25	**26**	**24**	**29**	**19**	**23**	**20**	**21**	**21**	**21**	**24**	**16**	**20**	**16**	**16**	**14**	**11**	**9**	**10**	**12**	**14**	**14**	**14**	**15**	**14**	**17.6**
26	8	14	14	16	20	25	38	30	14	20	32	34	39	42	44	40	29	41	41	34	40	41	38	34	
27	45	48	47	32	30	29	37	32	36	40	46	50	56	74	76	76	56	47	56	47	50	46	48	46	
28	47	44	55	31	30	35	40	30	30	25	31	22	21	30	20	15	18	14	16	18	16	24	35	46	
29	24	26	21	20	20	20	31	21	11	12	8	16	16	20				±p	3	5	±p	±p	±p	16	
30	14	15	13	13	13	11	15	14	15	18	18	34	29	21	21	20	19	18	20	16	16	14	8	10	
31	9	11	0	—4	0	0	8	20	14	16	20	16	17	15	16	14	14	14	15	15	13	12	9	10	
M.	**18.0**	**15.1**	**13.9**	**13.1**	**13.4**	**13.9**	**15.7**	**17.9**	**19.3**	**19.3**	**18.6**	**20.3**	**20.7**	**20.4**	**18.4**	**20.0**	**19.6**	**17.1**	**18.1**	**17.9**	**17.9**	**18.3**	**15.3**	**14.9**	**17.4**

Februar.

Datum	1a	2a	3a	4a	5a	6a	7a	8a	9a	10a	11a	12a	1p	2p	3p	4p	5p	6p	7p	8p	9p	10p	11p	Mittel
1	7	8	7	8	8	8	8	10	12	15	14	15	18	16	18	19	22	18	20	20	18	16	15	14	
2	12	10	9	11	11	8	12	14	16	32	31	38	25	25	31	21	21	22	20	20	18	16	15	15	
3	17	15	11	10	10	8	10	14	18	22	17	26	23	24	18	18	20	22	18	14	20	20	16	7	
4	12	—p	7	7	8	9	8	8	10	10	8	10	10	10	10	10	9	10	10	12	13	14	16	13	
5	12	8	9	8	7	8	13	7	8	6	4	10	14	20	18	22	13	12	12	16	13	16	14	12	
6	**10**	**8**	**9**	**8**	**8**	**10**	**10**	**12**	**12**	**15**	**16**	**18**	**14**	**12**	**13**	**12**	**15**	**14**	**13**	**15**	**16**	**14**	**16**	**14**	**12.7**
7	**12**	**10**	**8**	**10**	**10**	**12**	**18**	**28**	**18**	**20**	**22**	**28**	**28**	**23**	**17**	**18**	**22**	**26**	**28**	**30**	**30**	**23**	**17**	**18**	**19.8**
8	18	18	16	18	18	16	16	16	17	12	8	23	20	16	14	12	24	+p	—14	—16	24	±p	—20	—18	
9	—p	—p	—40	±p	±p	±p	12	15	12	12	15	17	16	16	22	15	16	22	19	18	15	14	14	13	
10	10	10	12	8	10	8	8	14	20	23	16	12	—8	16	20	14	20	20	9	—25	0	14	+p	16	
11	15	14	14	14	14	15	14	12	14	14	14	17	16	14	14	14	15	10	8	10	10	12	—8	—4	
12	—13	—38	—p	0	0	4	8	—24	6	5	±p	±p	10	10	12	13	10	14	15	14	15	14	10	10	
13	12	12	13	15	16	14	16	18	—p	12	12	±p	±p	—p	0	12	13	12	—20	0	—15	—p	—p	—p	
14	—p	—p	0	12	11	11	13	13	14	10	10	0	0	7	7	15	7	8	6	9	14	22	22	20	
15	12	7	—10	—45	—p	—p	0	7	8	—4	10	12	12	14	14	14	16	18	16	16	17	27	23	22	
16	20	17	18	10	1	8	10	13	12	11	8	3	0	9	16	13	7	7	6	6	7	7	4	7	
17	10	12	8	8	10	8	14	24	26	26	7	10	7	14	14	7	14	14	18	14	14	15	18	10	
18	14	11	8	12	18	30	43	40	45	56	30	15	10	15	15	16	14	14	17	18	22	23	21	20	
19	**16**	**14**	**15**	**7**	**4**	**8**	**6**	**8**	**11**	**16**	**17**	**18**	**17**	**18**	**15**	**14**	**15**	**15**	**16**	**21**	**16**	**14**	**13**	**10**	**13.5**
20	10	8	8	8	9	9	9	11	20	28	31	24	24	29	23	24	24	26	32	46	64	78	60	58	
21	38	42	35	31	31	30	32	56	75	80	64	62	54	46	46	42	40	35	24	23	24	35	40	36	
22	38	32	28	26	23	24	23	16	22	38	47	50	32	39	34	26	22	16	14	18	26	±p	15	18	
23	20	12	16	16	15	8	11	12	17	14	15	18	21	22	23	23	23	21	19	18	18	19	16	16	
24								16	15	18	19	23	22	20	18	28	22	20	12	7	8	8	8	5	
25	8	12	15	12	5	0	6	7	14	58	15	10	14	12	8	11	6	10	12	14	21	16	14	21	
26	17	12	14	10	10	2	8	11	0	0	±p	±p	±p	5	7	8	11	11	12	14	12	10	8	2	
27	3	2	1	4	4	6	4	4	0	3	3	0	0	14	13	16	20	45	48	39	18	10	14	10	
28	10	12	11	±p	38	+p	6	9	23	20	8	—5	±p	18	16	23	24	18	16	22	20	23	32	34	
M.	**12.7**	**10.7**	**10.7**	**8.3**	**7.3**	**10.0**	**11.3**	**16.0**	**13.7**	**17.0**	**18.3**	**21.3**	**19.7**	**17.7**	**15.0**	**14.7**	**17.3**	**18.3**	**19.0**	**22.0**	**20.7**	**17.0**	**15.3**	**14.0**	**15.3**

H = 95 m
h_k = 4.5 m

Perturbierte Stunden sind mit p bezeichnet.
Normaltage sind fett gedruckt.

März.

Datum	1a	2a	3a	4a	5a	6a	7a	8a	9a	10a	11a	12a	1p	2p	3p	4p	5p	6p	7p	8p	9p	10p	11p	Mittel
1	15	13	20	12	9	7	8	24	18	12	20	22	24	23	16	17	14	8	10	13	9	6	8	10	
2	8	7	7	4	5	9	13	17	14	16	14	12	13	13	14	18	18	23	18	28	32	29	30	33	
3	24	12	10	11	15	23	20	24	28	28	42	44	51	55	57	52	55	40	26	30	41	43	52	45	
4	30	38	45	42	38	50	38	50	64	46	56	52	48	56	48	30	26	34	38	31	30	22	18	22	
5	19	18	16	15	16	20	29	35	46	32	20	+p	24	15	31	35	38	31	30	28	21	18	15	15	
6	14	13	12	13	12	13	15	18	26	30	34	19	14	14	18	14	22	23	18	19	19	18	14	14	
7	**18**	**16**	**16**	**16**	**16**	**22**	**23**	**29**	**35**	**32**	**18**	**17**	**17**	**23**	**22**	**24**	**23**	**24**	**23**	**19**	**17**	**16**	**15**	**15**	**20.7**
8	**15**	**14**	**13**	**13**	**13**	**13**	**14**	**16**	**18**	**16**	**16**	**16**	**15**	**15**	**19**	**15**	**14**	**17**	**15**	**21**	**19**	**19**	**18**	**13**	**15.7**
9	18	18	16	13	12	17	24	21	22	36	34	29	23	25	25	24	20	18	17	22	24	29	27	20	
10	20	17	14	12	12	14	16	19	25	30	12	14	15	17	19	19	21	20	22	26	32	34	36	28	
11	22	20	23	21	19	20	20	28	35	46	23	21	18	4	−8	−9	−7	10	26	28	22	31	30	30	
12	24	19	17	15	14	14	16	20	27	22	15	18	20	22	7	14	20	24	31	40	28	23	22	16	
13	16	15	14	18	22	17	17	23	25	20	21	21	23	24	22	22	20	20	25	29	34	33	30	32	
14	22	18	16	14	13	14	14	18	32	30	24	20	22	20	20	20	23	20	24	28	38	36	35	28	
15	**25**	**18**	**16**	**14**	**12**	**14**	**15**	**21**	**25**	**29**	**38**	**32**	**30**	**26**	**23**	**20**	**21**	**20**	**22**	**23**	**28**	**26**	**24**	**23**	**22.7**
16	14	14	14	12	12	13	21	25	21	15	16	18	26	28	20	12	12	22	35	38	49	32	10	3	
17	30	41	17	13	12	15	18	21	24	32	37	45	52	37	34	36	15	14	28	39	40	41	30	28	
18	20	24	26	21	18	18	18	26	32	38	43	33	52	54	45	48	32	30	20	24	26	24	22	18	
19	22	22	20	18	18	19	17	15	20	23	28	26	42	48	50	31	26	27	23	18	16	14	12	8	
20	7	7	7	7	8	16	24	24	26	14	10	11	6	5	7	5	4	10	7	8	8	7	6	3	
21	3	0	0	0	2	5	8	10	14	25	29	23	20	22	18	17	15	16	17	16	18	14	16	17	
22	**15**	**14**	**13**	**14**	**14**	**13**	**15**	**16**	**28**	**31**	**18**	**22**	**20**	**22**	**20**	**16**	**15**	**23**	**26**	**30**	**32**	**26**	**24**	**21**	**20.3**
23	16	16	17	15	16	12	46	52	39	38	28	33	34	32	31	27	27	24	23	21	19	19	17	14	
24	17	15	15	14	16	18	25	29	50	±p	+p	+p	+p	+p	12	20	±p	9	14	10	16	15	19	30	
25	±p	±p	0	2	5	15	10	30	35	20	4	35	±p	10	32	15	−5	0	−9	−38	−15	±p	±p	±p	
26	10	8	9	8	10	9	12	13	11	12	10	10	12	11	11	11	11	12	10	10	24	22	22	23	
27	20	24	25	32	40	53	62	51	30	27	20	20	20	15	20	23	20	20	19	25	29	30	24	19	
28	18	18	19	14	14	18	21	65	39	38	+p	20	8	17	12	11	9	15	21	23	21	19	17	14	
29	**13**	**11**	**11**	**12**	**9**	**11**	**14**	**13**	**12**	**15**	**18**	**18**	**14**	**14**	**13**	**12**	**12**	**14**	**19**	**22**	**20**	**19**	**21**	**18**	**14.8**
30	15	16	16	20	29	5	11	6	12	15	10	14	18	16	21	19	21	20	23	28	26	20	19	24	
31	25	21	21	22	23	26	25	27	23	22	25	23	10	9	10	15	10	12	13	12	12	11	14	14	
M.	**17.2**	**14.6**	**13.8**	**13.8**	**12.8**	**14.6**	**16.2**	**19.0**	**23.6**	**24.6**	**21.6**	**21.0**	**19.2**	**20.0**	**19.4**	**17.4**	**17.0**	**19.6**	**21.0**	**23.0**	**23.2**	**21.2**	**20.4**	**18.0**	**18.8**

April.

Datum	1a	2a	3a	4a	5a	6a	7a	8a	9a	10a	11a	12a	1p	2p	3p	4p	5p	6p	7p	8p	9p	10p	11p	Mittel
1	10	12	14	13	9	5	±p	±p	±p	±p	±p	±p	0	±p	0	9	11	13	20	31	24	26	27	32	
2	25	22	18	16	11	15	18	13	13	15	11	5	4	7	7	6	5	5	12	13	9	6	20	−p	
3	−38	0	23	20	9	10	11	13	9	15	14	13	13	14	13	14	13	16	14	19	19	16	11	9	
4	7	7	7	8	7	8	8	13	14	14	12	13	15	14	18	20	21	14	11	12	13	16	15	19	
5	**17**	**18**	**16**	**17**	**13**	**12**	**9**	**9**	**9**	**8**	**12**	**13**	**14**	**15**	**14**	**15**	**12**	**11**	**9**	**13**	**15**	**18**	**13**	**13**	**13.1**
6	11	13	10	8	8	9	11	14	17	18	12	11	14	16	20	12	15	17	11	18	25	24	18	20	
7	16	15	14	15	12	14	17	20	22	22	19	15	16	17	18	13	12	9	12	14	19	18	24	21	
8	16	13	15	14	15	16	21	21	24	23	19	15	14	13	11	9	9	8	10	12	18	16	14	11	
9	12	13	11	11	11	9	10	13	15	14	11	9	11	14	13	12	9	9	7	9	12	13	17	12	
10	12	10	9	8	9	11	11	11	12	11	10	9	9	8	9	10	9	9	9	9	11	18	15	13	
11	13	11	9	8	10	8	11	15	18	19	17	14	12	12	14	14	13	9	10	14	23	21	22	18	
12	15	13	11	10	12	11	10	12	13	12	10	8	7	6	9	9	8	7	6	6	8	11	10	8	
13	**8**	**9**	**8**	**7**	**5**	**6**	**6**	**6**	**10**	**10**	**9**	**9**	**8**	**9**	**11**	**12**	**11**	**11**	**9**	**10**	**11**	**12**	**14**	**13**	**9.3**
14	14	13	10	8	6	5	4	7	6	6	7	5	8	12	−p	−p	−p	±p	−p	−p	0	6	7	±p	
15	±p	±p	±p	±p	6	5	9	8	7	8	9	−p	7	6	2	10	11	±p	−p	−p	−p	−28	0	−p	
16	10	20	+p	+p	14	+p	+p	+p	+p	15	−p	±p	16	+p	±p	+p	16	14	12	14	26	24	21	14	
17	15	16	22	24	18	17	16	20	18	16	15	14	11	12	15	16	17	16	13	11	10	11	8	10	
18	10	7	5	7	6	6	5	±p	13	8	8	13	17	17	11	11	9	11	11	40	11	12	11	9	
19	**8**	**12**	**13**	**10**	**8**	**7**	**7**	**8**	**12**	**13**	**13**	**13**	**12**	**11**	**12**	**12**	**12**	**11**	**10**	**13**	**12**	**10**	**12**	**10**	**10.9**
20	8	9	9	9	11	14	14	18	18	15	14	15	16	14	17	20	17	14	11	9	−11	−20	−18	−p	
21	−15	−p	−36	−17	−8	6	9	10	11	10	15	15	14	13	14	14	12	12	10	14	20	20	16	15	
22	11	10	11	12	12	10	10	14	18	19	18	18	13	11	13	13	10	8	7	8	7	8	−2	−10	
23	−9	1	2	−8	−5	−7	−20	−24	−p	−p	−p	−8	−p	±p	40	15	22	13	17	19	12	13	17	13	
24	11	8	12	13	13	16	12	15	17	18	17	18	17	13	12	45	18	±p	±p	±p	±p	12	9	13	
25	13	12	12	13	14	22	20	13	20	±p	14	15	16	18	−p	±p	±p	±p	17	17	18	15	21	17	
26	26	35	47	43	52	40	45	33	25	13	10	12	12	11	12	13	12	11	11	11	17	17	13	16	
27	15	18	20	18	20	20	17	15	13	13	12	11	10	10	10	11	13	12	10	14	14	14	10	6	
28	7	7	6	5	6	7	9	12	13	13	10	8	8	9	12	12	12	11	12	12	15	15	15	10	
29	12	14	8	8	8	9	10	11	11	12	8	10	2	3	4	±p	4	6	6	7	8	11	8	5	
30	**4**	**3**	**2**	**2**	**3**	**3**	**4**	**4**	**5**	**5**	**7**	**8**	**10**	**11**	**12**	**13**	**14**	**14**	**15**	**16**	**13**	**10**	**8**	**9**	**8.1**
M.	**9.2**	**10.5**	**9.8**	**9.0**	**7.2**	**7.0**	**6.5**	**6.8**	**9.0**	**9.0**	**10.2**	**10.8**	**11.0**	**11.5**	**12.2**	**13.0**	**12.2**	**11.8**	**10.8**	**13.0**	**12.8**	**12.5**	**11.8**	**11.2**	**10.4**

H = 95 m
h_k = 4.5 m

Perturbierte Stunden sind mit p bezeichnet.
Normaltage sind fett gedruckt.

Mai.

Datum	1a	2a	3a	4a	5a	6a	7a	8a	9a	10a	11a	12a	1p	2p	3p	4p	5p	6p	7p	8p	9p	10p	11p	Mittel
1	8	8	7	7	8	9	9	10	9	10	10	10	12	11	13	12	12	10	10	12	10	10	13	13	
2	12	9	4	5	8	4	4	6	8	8	5	±p	±p	±p	±p	—p	—p	—p	0	±p	—12	—10	—12	—5	
3	—10	—5	—1	1	1	±p	0	0	5	8	8	5	4	10	10	9	15	8	8	8	8	10	17	15	
4	11	11	15	15	12	8	7	9	13	15	12	12	12	13	12	13	13	12	9	12	15	22	25	27	
5	28	55	35	14	9	10	5	7	8	11	10	9	9	10	11	12	10	10	11	10	16	17	13	8	
6	8	8	7	6	6	7	9	9	10	9	8	8	9	9	9	10	10	10	9	10	10	8	5	—p	
7	—p	—p	±p	±p	7	4	12	8	4	0	—1	2	—4	10	—25	—p	—p	—p	±p	±p	±p	±p	—p	±p	
8	20	3	1	0	0	3	4	7	7	8	8	7	0	4	3	5	8	1	4	4	5	3	0	3	
9	2	2	5	4	2	0	5	4	0	4	1	—8	4	6	7	6	6	11	12	15	10	±p	—3	—1	
10	0	—2	—3	—3	0	—1	—2	—1	8	8	3	12	10	11	11	10	10	12	12	9	—1	—2	—1	0	
11	—2	—5	—3	—2	—1	0	6	±p	±p	—p	—11	1	4	5	1	10	4	—p	7	8	8	30	13	12	
12	35	7	8	8	0	8	±p	±p	7	13	5	0	4	15	13	16	9	8	14	13	13	7	8	11	
13	12	18	36	35	16	13	9	7	5	0	3	7	8	20	14	13	19	14	12	20	26	34	40	48	
14	50	38	39	22	30	32	30	16	13	10	9	7	8	8	8	8	8	8	9	10	13	14	16	10	
15	**9**	**8**	**7**	**6**	**7**	**8**	**11**	**11**	**12**	**12**	**11**	**8**	**8**	**8**	**9**	**9**	**11**	**9**	**8**	**7**	**12**	**11**	**8**	**7**	**9.0**
16	6	6	6	6	5	6	8	6	6	7	6	8	6	7	7	7	6	7	5	4	5	6	3	4	
17	4	5	4	3	—8	0	4	3	4	5	3	4	4	4	4	4	4	4	3	5	7	7	6	5	
18	**6**	**5**	**6**	**7**	**6**	**6**	**7**	**7**	**8**	**9**	**9**	**10**	**8**	**8**	**9**	**8**	**8**	**8**	**10**	**9**	**8**	**10**	**13**	**13**	**8.2**
19	**8**	**7**	**7**	**8**	**7**	**6**	**8**	**12**	**12**	**11**	**10**	**8**	**9**	**10**	**10**	**9**	**9**	**11**	**10**	**9**	**8**	**8**	**7**	**7**	**8.8**
20	**7**	**7**	**7**	**6**	**7**	**6**	**8**	**9**	**11**	**9**	**8**	**8**	**12**	**13**	**13**	**12**	**8**	**9**	**9**	**11**	**10**	**9**	**8**	**7**	**8.9**
21	**5**	**6**	**7**	**6**	**4**	**3**	**3**	**4**	**6**	**6**	**6**	**7**	**7**	**8**	**8**	**8**	**8**	**8**	**8**	**7**	**8**	**9**	**11**	**9**	**6.8**
22	**7**	**8**	**6**	**6**	**6**	**6**	**7**	**8**	**9**	**8**	**4**	**4**	**6**	**8**	**7**	**10**	**10**	**9**	**8**	**5**	**4**	**4**	**5**	**5**	**6.7**
23	5	4	6	5	6	6	7	8	4	2	2	5	0	0	—4	4	8	7	7	7	7	7	7	6	
24	6	6	4	2	2	1	3	—10	4	2	—11	—12	0	3	4	6	5	3	4	2	4	5	7	4	
25	5	4	5	5	4	6	3	5	5	4	4	3	2	0	—12	—10	—p	±p	2	—20	—15	—8	2	4	
26	1	—5	—p	—26	—17	—p	—p	—15	—25	7	—20	4	4	5	—10	2	0	9	11	10	10	9	9	17	
27	16	17	19	14	9	7	8	8	7	6	5	4	5	5	4	4	4	5	6	6	6	—32	—14	—p	
28	±p	±p	±p	±p	—33	—15	—p	—p	±p	—p	—45	—8	6	7	10	21	8	8	10	18	±p	—p	—15	1	
29	5	20	37	9	3	4	5	5	4	6	3	4	2	2	—9	—12	4	4	8	6	10	—24	4	19	
30	30	24	16	12	8	5	8	7	6	7	6	±p	±p	±p	—5	1	3	9	11	14	13	13	14	13	
31	15	11	10	10	8	12	10	13	13	10	±p	20	±p	±p	±p	14	11	8	13	15	15	16	16	12	
M.	**7.0**	**6.8**	**6.7**	**6.5**	**6.2**	**5.8**	**7.3**	**8.5**	**9.7**	**9.2**	**8.0**	**7.5**	**8.3**	**9.2**	**9.3**	**9.3**	**9.0**	**9.0**	**8.8**	**8.0**	**8.3**	**8.5**	**8.7**	**8.0**	**8.1**

Juni.

Datum	1a	2a	3a	4a	5a	6a	7a	8a	9a	10a	11a	12a	1p	2p	3p	4p	5p	6p	7p	8p	9p	10p	11p	Mittel
1	10	8	8	9	9	10	13	13	12	10	10	9	11	±p	—p	14	12	11	12	12	13	8	±p	18	
2	12	8	6	6	8	9	8	8	8	7	7	8	8	9	10	12	14	±p	±p	±p	15	20	13	8	
3	10	10	17	14	12	20	16	12	11	13	12	10	10	8	11	9	8	8	8	10	10	8	7	6	
4	6	6	7	7	6	7	8	10	12	12	12	11	8	7	7	8	8	9	8	12	8	9	9	9	
5	**8**	**9**	**7**	**8**	**8**	**8**	**10**	**13**	**18**	**15**	**12**	**11**	**10**	**10**	**10**	**10**	**8**	**8**	**7**	**7**	**9**	**12**	**11**	**15**	**10.2**
6	20	16	17	15	18	15	23	22	10	5	4	7	7	8	9	12	9	10	11	10	10	11	13	13	
7	11	10	10	6	6	5	6	5	4	4	4	6	5	5	5	5	5	5	6	6	6	6	5	6	
8	6	6	5	5	4	5	6	6	8	7	6	6	6	6	7	6	8	8	7	10	9	8	7	9	
9	6	5	5	6	5	5	6	6	7	8	7	7	8	9	10	8	8	11	14	15	13	8	7	7	
10	**7**	**7**	**6**	**6**	**6**	**6**	**7**	**9**	**8**	**9**	**6**	**6**	**6**	**7**	**7**	**6**	**6**	**8**	**8**	**9**	**7**	**5**	**4**	**5**	**6.7**
11	4	3	3	5	4	5	10	10	11	10	7	7	6	5	4	3	6	8	7	—p	—p	10	10	8	
12	8	7	7	6	6	6	5	5	8	5							8	10	12	11	12	10	9	7	
13	8	8	5	6	7	9	10	15	15	13	10	10	8	6	12	13	13	12	14	8	4	5	5	6	
14	6	6	6	6	7	8	8	9	10	10	8	8	5	—5	6	7	7	9	9	8	7	8	8	10	
15	7	7	6	7	8	9	8	10	12	10	10	9	9	7	7	9	10	9	12	10	10	8	0	0	
16	0	0	0	1	5	6	5	8	10	13	14	14	15	14	13	13	±p	±p	8	8	6	7	6	6	
17	7	5	6	6	8	7	±p	9	11	11	7	6	7	8	7	6	8	5	6	8	11	10	9	9	
18	7	8	7	7	9	5	—p	—p	—p	—10	±p	0	8	8	10	9	±p	±p	—30	10	15	19	15	12	
19	11	10	7	5	6	3	3	9	12	18	17	16	13	11	10	9	10	13	15	12	15	12	10	9	
20	8	±p	±p	7	7	8	±p	10	±p	±p	±p	11	—10	1	9	10	—p	—p	±p	5	11	10	13	17	
21	12	10	12	13	8	7	4	5	3	0	0	—5	—30	10	11	10	—p	—p	6	6	12	13	13	11	
22	11	3	2	0	2	6	6	7	7	8	9	11	8	9	9	8	9	9	10	9	7	—p	7	4	
23	3	3	4	0	0	—9	—p	—p	—p	7	10	8	7	5	3	4	2	4	8	9	6	8	12	11	
24	**8**	**9**	**8**	**7**	**6**	**5**	**5**	**6**	**5**	**5**	**7**	**9**	**9**	**10**	**10**	**10**	**10**	**9**	**9**	**9**	**8**	**8**	**9**	**10**	**8.0**
25	**10**	**10**	**9**	**7**	**8**	**10**	**9**	**9**	**10**	**13**	**12**	**10**	**9**	**9**	**9**	**8**	**7**	**8**	**8**	**8**	**6**	**8**	**8**	**7**	**8.8**
26	7	8	7	8	7	7	7	6	8	7	7	7	8	9	8	8	7	8	8	8	3	1	4	3	
27	3	3	3	4	5	5	4	4	5	8	7	8	8	7	8	8	7	6	8	8	8	10	7	7	
28	7	7	5	4	5	5	5	6	7	6	7	7	8	7	7	7	7	7	8	8	8	8	7	6	
29	7	7	8	3	7	12	7	7	7	7	7	9	8	8	8	9	10	11	11	11	8	6	6	7	
30	6	7	12	±p	20	13	11	10	8	9	8	8	6	7	8	9	10	10	9	8	8	12	11	11	
M.	**8.2**	**8.8**	**7.5**	**7.0**	**7.0**	**7.2**	**7.8**	**9.2**	**10.2**	**10.5**	**9.2**	**9.0**	**8.5**	**9.0**	**9.0**	**8.5**	**7.8**	**8.2**	**8.0**	**8.2**	**7.5**	**8.2**	**8.0**	**9.2**	**8.4**

H = 95 m
h_k = 4.5 m

Perturbierte Stunden sind mit p bezeichnet.
Normaltage sind fett gedruckt.

Juli.

Datum	1a	2a	3a	4a	5a	6a	7a	8a	9a	10a	11a	12a	1p	2p	3p	4p	5p	6p	7p	8p	9p	10p	11p	Mittel
1	8	6	7	6	6	5	5	8	9	10	8	7	7	7	7	7	7	7	8	7	7	8	7	7	
2	7	5	6	6	8	11	12	12	12	10	9	9	9	9	10	10	11	10	11	12	10	10	11	11	
3	10	10	10	7	7	7	8	11	12	12	10	9	10	9	8	8	9	10	8	8	—20	10	7	11	
4	11	9	8	4	6	7	9	12	12	7	9	7	4	4	3	5	5	5	6	8	8	8	9	8	
5	5	6	5	5	7	8	5	8	8	7	7	8	7	7	8	7	8	7	7	8	14	12	12	10	
6	9	6	4	3	3	0	—2	—15	0	±p	±p	±p	9	11	10	9	9	9	9	9	9	13	12	9	
7	8	11	10	9	8	8	8	8	8	9	8	7	8	7	7	8	9	12	14	13	10	12	10	12	
8	9	8	6	8	8	6	7	8	5	5	7	7	6	10	±p	±p	±p	10	12	13	12	8	5	4	
9	**3**	**6**	**4**	**4**	**7**	**8**	**8**	**10**	**12**	**13**	**10**	**9**	**9**	**11**	**10**	**9**	**10**	**11**	**10**	**10**	**9**	**8**	**8**	**7**	**8.6**
10	6	5	6	7	7	12	15	14	10	10	9	11	9	9											
11																									
12																									
13											8	8	7	8	9	9	8	8	8	8	12	18	18	18	
14	15	12	—11	5	12	12	13	13	12	12	12	10	8	8	9	10	9	11	13	12	13	12	10	12	
15	9	10	—5	0	8	7	10	10	10	9	9	11	10	10	11	11	12	12	11	11	10	9	9	8	
16	7	7	7	7	6	8	8	9	10	9	7	7	8	8	9	8	9	10	12	11	13	13	10	9	
17	10	9	8	8	6	7	9	9	9	8	8	7	6	7	7	7	7	7	6	5	6	6	9	9	
18	**7**	**6**	**5**	**4**	**6**	**4**	**4**	**3**	**4**	**4**	**5**	**6**	**7**	**7**	**6**	**6**	**6**	**5**	**4**	**5**	**7**	**6**	**6**	**5**	**5.3**
19	4	3	3	3	3	4	6	6	6	6	6	5	±p	±p	2	3	5	4	4	4	5	6	5	6	
20	5	5	4	5	3	4	5	5	6	6	7	7	7	7	7	7	7	7	6	5	6	9	8	7	
21	**5**	**5**	**4**	**5**	**5**	**5**	**6**	**8**	**8**	**8**	**7**	**7**	**7**	**8**	**8**	**8**	**8**	**9**	**9**	**7**	**8**	**8**	**8**	**9**	**7.1**
22	7	8	6	8	7	6	8	11	11	10	9	8	8	8	9	9	10	10	9	9	8	9	8	9	
23	8	8	9	9	10	8	9	11	11	10	10	9	8	10	10	9	11	9	10	9	11	11	9	8	
24	6	6	5	5	5	7	8	11	12	11	12	11	11	9	9	10	11	10	10	9	8	10	9	8	
25	7	10	11	7	7	8	8	7	11	11	8	7	8	±p	±p	±p	7	7	8	9	10	11	9	7	
26	7	6	6	5	6	7	7	8	9	9	±p	20	6	9	±p					±p	±p	±p	±p	±p	
27	15	9	—8	—12	—8	—5	20	±p	±p	±p	4	5	±p	±p	20	10	11	±p	—11	±p	±p	±p	18	—10	
28	—28	—27	—13	—5	—4	0	12	17	16	13	13	12	13	13	10	10	11	—11	13	10	10	9	8	6	
29	7	7	6	7	8	8	10	10	5	17	±p	±p	12	12	6	±p	±p	±p	6	6	11	12	9	8	
30	8	8	7	7	7	6	8	13	12	9	8	8	10	9	8	8	9	6	11	12	10	±p	±p	±p	
31	13	10	13	18	14	16	18	16	13	14	11	10	16	±p	12	10	±p	9	9	8	10	—p	9	6	
M.	**5.0**	**5.7**	**4.3**	**4.3**	**6.0**	**5.7**	**6.0**	**7.0**	**8.0**	**8.3**	**7.3**	**7.3**	**7.7**	**8.7**	**8.0**	**7.7**	**8.0**	**8.3**	**7.7**	**7.3**	**8.0**	**7.3**	**7.3**	**7.0**	**7.0**

August.

Datum	1a	2a	3a	4a	5a	6a	7a	8a	9a	10a	11a	12a	1p	2p	3p	4p	5p	6p	7p	8p	9p	10p	11p	Mittel
1	15	10	9	8	7	8	14	9	9	10	8	10	9	±p	±p	±p	±p	±p	±p	6	12	11	10	10	
2	7	6	6	9	10	9	8	13	±p	±p	±p	±p	±p	±p	±p	10	12	13	14	15	17	15	10	7	
3	8	8	7	8	4	6	16	16	14	10	14	11	12	14	14	17	17	10	10	10	10	12	13	12	
4	12	11	10	12	15	25	31	25	16	15	13	12	11	9	14	13	20	11	11	10	10	12	14	18	
5	12	9	7	7	7	7	13	18	±p	±p	±p	16	15	15	12	12	11	15	20	9	10	11	11	11	
6	10	11	13	12	9	9	9	10	10	10	11	10	11	10	9	16	19	12	8	7	9	8	9	8	
7	7	6	8	7	7	6	10	13	12	11	11	9	8	10	9	11	10	11	8	7	10	7	9	11	
8	13	10	9	11	22	10	8	9	12	11	8	7	9	9	10	10	9	9	12	15	18	23	17	14	
9	13	17	19	20	16	15	11	14	15	13	11	11	11	11	12	12	11	11	9	5	7	9	15	10	
10	±p	—20	3	5	3	4	0	0	—1	5	—20	35	13	13	9	12	11	13	14	16	18	18	14	10	
11	9	5	9	—p	±p	±p	6	9	28	18	22	16	10	11	12	12	13	13	14	10	12	12	14	17	
12	**10**	**7**	**8**	**7**	**8**	**10**	**16**	**15**	**15**	**16**	**16**	**17**	**15**	**16**	**15**	**14**	**13**	**10**	**12**	**11**	**10**	**11**	**8**	**8**	**12.0**
13	7	5	6	6	6	4	—10	10	9	11	15	±p	—15	10	10	20	23	0	8	5	8	9	15	13	
14	15	17	15	12	17	19	20	23	18	10	8	12	8	8	8	8	8	8	8	9	8	8	7	7	
15	**8**	**9**	**8**	**7**	**7**	**8**	**9**	**12**	**13**	**15**	**15**	**12**	**13**	**12**	**8**	**9**	**7**	**8**	**4**	**7**	**9**	**11**	**10**	**8**	**9.5**
16	**10**	**10**	**8**	**7**	**6**	**7**	**9**	**12**	**12**	**8**	**8**	**11**	**11**	**8**	**10**	**9**	**9**	**10**	**8**	**5**	**5**	**4**	**6**	**5**	**8.2**
17	7	4	6	3	5	6	6	8	9	9	11	9	9	9	11	8	8	9	7	9	8	10	7	7	
18	5	7	—5	6	6	6	7	8	9	9	10	13	10	13	13	12	12	13	13	14	8	15	8	8	
19	7	7	5	6	6	8	13	13	10	10	12	13	11	12	10	11	13	11	9	10	11	11	9	10	
20	12	10	8	7	8	9	9	9	10	9	8	8	6	4	3	5	7	—2	0	5	4	6	4	3	
21	3	6	7	8	7	8	7	8	6	5	5	8	10	9	10	11	8	8	5	8	9	8	8	9	
22	6	7	4	4	4	6	8	6	8	8	7	6	5	6	8	6	7	5	4	7	10	4	7	7	
23	**8**	**8**	**7**	**7**	**7**	**7**	**7**	**7**	**7**	**9**	**9**	**8**	**9**	**9**	**8**	**8**	**10**	**8**	**9**	**9**	**9**	**9**	**9**	**9**	**8.2**
24	**9**	**8**	**8**	**8**	**8**	**9**	**8**	**9**	**9**	**9**	**9**	**8**	**9**	**10**	**11**	**11**	**11**	**10**	**11**	**11**	**10**	**9**	**9**	**8**	**9.2**
25	8	8	8	8	8	9	9	9	8	7	4	7	20	15	9	9	8	7	7	8	9	9	10	8	
26	**9**	**8**	**7**	**7**	**8**	**8**	**8**	**9**	**9**	**8**	**8**	**8**	**8**	**9**	**8**	**8**	**7**	**6**	**6**	**11**	**9**	**8**	**7**	**7**	**8.0**
27	**5**	**7**	**7**	**6**	**6**	**4**	**5**	**7**	**8**	**7**	**7**	**8**	**6**	**7**	**7**	**8**	**6**	**5**	**7**	**7**	**6**	**6**	**6**	**5**	**6.4**
28	12	—p	—25	—p	—p	±p	±p	±p	±p	20	30	25	18	12	14	14	15	14	13	16	28	25	21	17	
29	23	—35	30	18	12	9	11	5	3	4	0	±p	25	11	12	10	9	9	9	11	8	12	8	9	
30	8	8	8	8	8	7	10	13	12	13	13	12	13	11	12	12	12	12	11	10	12	12	10	9	
31	8	7	8	7	8	9	13	13	19	15	16	12	7	2	4	15	8	9	11	16	12	12	9	7	
M.	**8.4**	**8.1**	**7.6**	**7.0**	**7.1**	**7.6**	**8.9**	**10.1**	**10.4**	**10.3**	**10.3**	**10.3**	**10.1**	**10.1**	**9.6**	**9.6**	**9.0**	**8.1**	**8.1**	**8.7**	**8.3**	**8.3**	**7.9**	**7.1**	**8.8**

H = 95 m
h_k = 4.5 m

Perturbierte Stunden sind mit p bezeichnet.
Normaltage sind fett gedruckt.

September.

Datum	1a	2a	3a	4a	5a	6a	7a	8a	9a	10a	11a	12a	1p	2p	3p	4p	5p	6p	7p	8p	9p	10p	11p	Mittel
1	**8**	**9**	**7**	**8**	**7**	**9**	**11**	**12**	**15**	**17**	**14**	**16**	**16**	**11**	**12**	**12**	**10**	**9**	**8**	**7**	**9**	**9**	**10**	**8**	**10.6**
2	**8**	**7**	**8**	**8**	**6**	**8**	**9**	**13**	**9**	**9**	**11**	**10**	**10**	**11**	**11**	**10**	**10**	**11**	**12**	**14**	**13**	**12**	**10**	**7**	**9.9**
3	7	6	5	6	6	8	9	13	15	12	9	15	12	13	13	11	12	11	13	15	20	15	12	11	
4	8	7	10	6	6	5	8	12	13	13	12	10	4	5	4	4	7	4	2	4	5	4	7	8	
5	6	6	6	2	3	3	4	6	7	9	13	11	7	7	0	2	10	±p	10	10	11	12	6	5	
6	5	3					1	3	4	6	5	5	3	6	—p	10	8	5	9	18	17	15	12	11	
7	10	10	8	6	4	5	4	4	6	8	12					6	9	9	9	9	6	7	5	4	
8	4	3	3	2	1	1	2	4	8	12	8	7	10	10	11	9	9	9	8	11	10	11	8	8	
9	9	7	7	6	7	7	6	9	13	10	10	10	9	8	±p	13	9	8	10	8	10	12	11	6	
10	7	7	5	7	8	9	8	12	13	12	13	9	10	11	±p	13	14	13	13	15	17	15	11	9	
11	**10**	**11**	**10**	**10**	**9**	**10**	**13**	**13**	**13**	**14**	**12**	**13**	**11**	**13**	**13**	**15**	**13**	**14**	**14**	**15**	**13**	**11**	**11**	**9**	**12.1**
12	**9**	**8**	**7**	**6**	**7**	**7**	**8**	**9**	**11**	**13**	**12**	**12**	**12**	**10**	**10**	**12**	**11**	**9**	**12**	**12**	**18**	**14**	**13**	**13**	**10.6**
13	**11**	**12**	**14**	**12**	**10**	**11**	**10**	**11**	**10**	**11**	**10**	**10**	**11**	**12**	**10**	**9**	**11**	**10**	**8**	**8**	**8**	**8**	**9**	**6**	**10.1**
14	7	7	8	8	8	8	16	23	20	15	10	14	13	14	11	11	12	11	11	12	9	8	7	8	
15	7	9	12	11	11	10	12	13	12	11	11	10	7	9	11	9	9	8	12	12	8	10	7	8	
16	8	7	12	6	8	7	8	9	10	10	10	12	11	10	11	12	11	9	11	10	12	15	23	10	
17	6	7	4	5	6	5	8	6	10	8	9	11	13	12	11	10	9	10	12	13	14	12	12	9	
18	7	7	5	5	5	5	9	9	8	8	8	8	0	—p	+p	4	±p	±p	—30	—14	0	3	1	—p	
19	±p	±p	10	2	—p	—7	+p	—35	10	±p	±p	8	6	10	7	—15	8	8	5	25	6	8	4	4	
20	1	1	0	±p	±p	±p	±p	±p	—p	4	6	5	9	20	15	13	—p	14	16	17	18	19	18	13	
21	8	7	8	10	8	—p	0	0	±p	15	15	10	18	14	9	10	±p	±p	±p	13	14	11	12	15	
22	13	15	15	14	15	21	21	23	18	14	12	10	10	12	12	11	10	±p	11	12	9	13	±p	±p	
23	10	—12	16	15	8	±p	±p	±p	5	12	22	15	14	14	±p	±p	13	13	14	13	13	12	11	9	
24	9	7	7	9	7	8	9	10	12	11	10	12	12	13	13	13	11	10	9	10	9	10	10	11	
25	8	8	10	13	12	11	18	20	23	24	14	17	14	12	13	10	6	6	5	4	7	10	10	11	
26	12	12	18	28	25	19	15	16	17	15	12	11	10	10	10	11	10	14	23	18	22	17	13	12	
27	**11**	**10**	**8**	**9**	**6**	**5**	**5**	**6**	**7**	**8**	**8**	**8**	**9**	**10**	**10**	**11**	**9**	**10**	**13**	**15**	**18**	**16**	**23**	**23**	**10.8**
28	22	25	21	19	17	16	15	15	15	12	10	9	8	8	8	7	8	16	12	14	15	13	14	13	
29	9	9	6	4	5	4	0	5	8	6	—p	15	25	20	12	10	13	15	23	21	25	18	20	18	
30	11	11	8	9	8	8	8	8	10	13	18	16	15	13	13	16	12	12	12	13	15	11	12	16	
M.	**9.5**	**9.5**	**9.0**	**8.8**	**7.5**	**8.3**	**9.3**	**10.7**	**10.8**	**12.0**	**11.2**	**11.5**	**11.5**	**11.2**	**11.0**	**11.5**	**10.7**	**10.5**	**11.2**	**11.8**	**13.2**	**11.7**	**12.7**	**11.0**	**10.7**

Oktober.

Datum	1a	2a	3a	4a	5a	6a	7a	8a	9a	10a	11a	12a	1p	2p	3p	4p	5p	6p	7p	8p	9p	10p	11p	Mittel
1	12	11	12	11	6	7	10	11	12	11	16	15	11	9	14	12	10	8	10	7	9	11	8	6	
2	**4**	**4**	**5**	**4**	**4**	**4**	**5**	**7**	**10**	**13**	**12**	**11**	**8**	**7**	**9**	**8**	**8**	**8**	**9**	**8**	**7**	**6**	**6**	**5**	**7.2**
3	7	8	8	7	6	4	7	8	13	12	8	7	18	9	12	11	10	10	9	12	10	10	10	9	
4	7	5	7	7	8	7	7	7	10	12	8	9	9	8	9	8	11	9	8	8	8	9	10	14	
5	**12**	**10**	**9**	**7**	**5**	**7**	**13**	**11**	**14**	**18**	**15**	**10**	**9**	**10**	**10**	**10**	**10**	**11**	**20**	**15**	**13**	**14**	**11**	**16**	**11.7**
6	10	7	7	6	5	0	—5	13	12	11	13	16	21	18	21	19	10	11	8	8	9	8	7	8	
7	**7**	**7**	**6**	**6**	**6**	**6**	**7**	**8**	**9**	**9**	**9**	**9**	**9**	**10**	**11**	**10**	**10**	**11**	**11**	**11**	**11**	**10**	**6**	**8**	**8.6**
8	**8**	**8**	**8**	**7**	**7**	**8**	**11**	**12**	**13**	**12**	**11**	**15**	**14**	**16**	**13**	**13**	**14**	**11**	**14**	**11**	**11**	**9**	**8**	**8**	**10.9**
9	6	5	—10	7	6	6	5	8	9	13	14	14	13	11	12	13	11	9	8	7	9	8	8	8	
10	8	7	7	7	7	7	7	8	10	15	17	8	8	8	11	10	12	12	9	8	8	7	7	7	
11	8	11	8	6	7	7	8	7	15	12	8	9	11	10	10	10	9	7	6	10	12	10	8	8	
12	**8**	**8**	**8**	**8**	**6**	**7**	**6**	**9**	**8**	**10**	**10**	**12**	**13**	**14**	**11**	**10**	**8**	**9**	**12**	**18**	**15**	**14**	**10**	**9**	**10.1**
13	**9**	**9**	**9**	**9**	**10**	**7**	**9**	**14**	**15**	**11**	**13**	**16**	**16**	**15**	**12**	**13**	**18**	**19**	**18**	**17**	**18**	**16**	**13**	**10**	**13.2**
14	11	10	10	10	8	9	9	13	11	9	11	10	10	10	10	±p	±p	35	40	13	14	15	13	13	
15	**10**	**8**	**8**	**8**	**9**	**9**	**10**	**13**	**13**	**13**	**16**	**18**	**18**	**15**	**13**	**9**	**11**	**12**	**15**	**12**	**15**	**18**	**13**	**12**	**12.4**
16	**10**	**10**	**11**	**10**	**8**	**11**	**10**	**15**	**17**	**14**	**18**	**14**	**11**	**13**	**14**	**9**	**8**	**13**	**12**	**12**	**14**	**12**	**11**	**5**	**11.8**
17	3	2	2	2	0	2	3	2	10	11	13	14	16	15	12	18	21	21	20	19	25	18	14	16	
18	14	14	9	9	9	9	9	9	11	13	13							13	15	14	13	11	11	13	
19	12	8	7	6	6	8	8	10	11	13	14	15	14	17	18	14	12	20	32	45	38	35	25	20	
20	17	12	13	15	12	16	17	27	19	17	14	14	17	17	16	12	11	17	13	19	23	20	17	13	
21	11	10	10	8	5	7	7	8	10	11	11	11	12	13	16	14	15	16	11	10	8	8	8	7	
22	6	4	4	±p	±p	14	20	18	±p	±p	±p	6	0	0	3	3	1	5	0	3	7	3	—1	—12	
23							5	3	3	—7	±p	±p	±p	±p	±p	±p	±p	±p	±p	±p	—2	0	4	5	
24	6	6	8	7	5	7	4	14	7	7	±p	9	10	9	0	11	11	14	18	—p	±p	—p	—5	4	
25	4	3	20	6	±p	±p	6										15	15	10	6	±p	8	7	6	
26	±p	±p	7	5	7	8	—p	11	12	12	15	16	13	17	16	16	20	23	12	8	15	14	11	±p	
27	—p	—p	5	0	—p	—p	—p	—30	—p	—p	—p	±p	—10	15	0	4	6	8	5	5	+p	±p	±p	6	
28	12	8	7	10	±p	±p	±p	±p	5	8	10	9	10	11	11	11	9	7	10	9	12	17	6	7	
29	6	6	7	7	6	7	8	8	12	11	12	10	5	—15	—5	—p	15	—p	0	4	15	18	14	11	
30	8	9	13	13	14	14	11	22	20	21	15	11	8	—15	—34	—20	10	22	23	24	27	15	7	6	
31	6	4	4	2	6	3	4	7	8	4	2	4	3	2	—6	—9	—20	0	2	3	6	15	9	8	
M.	**8.5**	**8.0**	**8.0**	**7.4**	**6.9**	**7.4**	**8.9**	**11.1**	**12.4**	**12.5**	**13.0**	**13.1**	**12.2**	**12.5**	**11.6**	**10.2**	**10.9**	**11.8**	**13.9**	**13.0**	**13.0**	**12.4**	**9.8**	**9.1**	**10.7**

H = 95 m
h_k = 4.5 m

Perturbierte Stunden sind mit p bezeichnet.
Normaltage sind fett gedruckt.

November.

Datum	1a	2a	3a	4a	5a	6a	7a	8a	9a	10a	11a	12a	1p	2p	3p	4p	5p	6p	7p	8p	9p	10p	11p	Mittel
1	15	20	16	15	8	6	7	15	17	22	20	15	16	+p	+p	+p	±p	25						
2								12	12	8	12	12	15	11	18	16	13	7	7	9	8	10	7	6
3	6	6	7	4	4	3	2	±p	25	22	22	11	6	10	13	8	9	15	20	15	15	16	11	12
4	9	7	4	4	6	8	9	11	12	13	14	14	14	11	12	14	18	29	62	60	53	46	33	18
5	22	35	36	27	22	21	18	23	26	18	20	16	12	9	14	19	24	31	33	48	65	53	50	41
6	39	35	28	29	36	30	18	16	28	30	36	25	22	26	23	28	26	25	27	23	32	33	35	56
7	35	38	15	10	10	8	10	18	21	21	19	26	27	20	16	15	25	36	37	39	40	42	24	17
8	13	12	9	8	10	11	9	10	10	9	10	12	13	14	14	13	14	14	18	24	26	23	16	13
9	**11**	**10**	**10**	**10**	**10**	**11**	**10**	**11**	**14**	**15**	**13**	**16**	**16**	**21**	**20**	**20**	**21**	**20**	**17**	**18**	**19**	**17**	**13**	**12**	**14.8**
10	10	10	9	9	9	9	11	12	18	24	22	24	20	22	23	24	30	34	26	25	31	25	15	12
11	11	10	11	10	12	11	16	22	44	46	37	30	25	23	22	23	32	45	43	45	47	60	56	37
12	30	29	30	33	22	23	32	35	32	41	54	52	40	35	48	59	48	60	62	59	67	54	40	43
13	55	34	32	33	19	18	26	39	52	56	38	25	30	21	32	35	24	30	40	62	61	40	13	21
14	11	7	12	11	18	22	21	25	21	22	19	15	17	19	21	13	16	7	2	21	26	23	20	19
15	19	14	14	13	12	10	9	10	14	20	25	36	42	38	24	23	28	27	35	37	42	38	30	27
16	20	20	23	14	15	14	30	45	47	43	40	42	53	45	38	±p	±p	15	27	26	46	48	35	41
17	40	33	30	22	22	19	18	24	30	31	32	33	42	46	63	70	67	66	67	70	+p	+p	45	32
18	20	25	35	47	48	+p	+p	68	63	67	65	37	38	55	60	50	53	53	54	+p	+p	60	40	38
19	30	35	33	40	49	52	50	42	43	30	25	23	28	21	13	14	15	18	23	24	26	25	13	12
20	14	13	11	12	13	12	11	11	13	17	19	24	28	29	23	21	24	29	38	37	33	48	28	16
21	16	17	17	14	12	10	13	13	17	27	35	30	30	23	24	22	22	20	13	0	—p	—25	0	—23
22	—5	7	6	7	7	7	8	9	6	7	6	12	6	7	25	23	16	18	19	24	32	14	13	14
23	18	13	11	11	10	9	11	12	19	22	21	27	24	27	27	26	37	50	65	53	42	+p	50	29
24	**22**	**22**	**19**	**17**	**11**	**8**	**9**	**10**	**15**	**20**	**15**	**14**	**14**	**15**	**17**	**14**	**16**	**19**	**23**	**20**	**23**	**24**	**25**	**20**	**17.1**
25	**15**	**15**	**13**	**17**	**18**	**13**	**15**	**29**	**25**	**23**	**20**	**21**	**22**	**21**	**15**	**14**	**23**	**35**	**30**	**23**	**18**	**19**	**20**	**23**	**20.3**
26	12	9	10	10	10	9	10	15	16	20	31	35	19	19	27	28	30	26	22	19	15	28	35	18
27	9	7	11	9	11	9	13	12	10	10	9	14	10	10	18	24	25	23	25	32	47	30	32	23
28	15	11	11	9	10	7	14	±p	±p	30	18	—1	—5	8	13	13	0	5	10	12	18	15	9	9
29	**8**	**8**	**8**	**7**	**6**	**6**	**6**	**7**	**9**	**12**	**14**	**21**	**14**	**12**	**10**	**10**	**18**	**22**	**22**	**25**	**32**	**29**	**21**	**13**	**14.2**
30	**14**	**11**	**10**	**10**	**8**	**9**	**12**	**11**	**20**	**18**	**22**	**25**	**25**	**26**	**23**	**24**	**29**	**33**	**34**	**35**	**37**	**34**	**33**	**24**	**22.0**
M.	**14.0**	**12.8**	**12.0**	**12.2**	**10.6**	**9.4**	**10.4**	**13.6**	**16.6**	**17.6**	**16.8**	**19.4**	**18.2**	**19.0**	**17.0**	**16.4**	**21.4**	**25.8**	**25.2**	**24.2**	**25.8**	**24.6**	**22.4**	**18.4**	**17.7**

December.

Datum	1a	2a	3a	4a	5a	6a	7a	8a	9a	10a	11a	12a	1p	2p	3p	4p	5p	6p	7p	8p	9p	10p	11p	Mittel
1	**15**	**17**	**19**	**19**	**18**	**10**	**10**	**18**	**24**	**23**	**25**	**24**	**22**	**24**	**27**	**31**	**34**	**40**	**32**	**40**	**42**	**40**	**29**	**24**	**25.3**
2	13	23	13	15	8	17	23	18	20	30	45	44	35	34	38	41	50	55	74	65	68	+p	+p	70
3	75	54	38	19	40	47	40	25	26	38	44	36	45	49	51	50	63	67	65	+p	+p	+p	+p	30
4	19	9	7	13	21	24	45	32	23	18	20	34	45	68	47	39	47	55	29	31	56	45	39	37
5	26	24	24	20	26	25	28	30	32	26	23	34	36	25	29	30	+p	39	62	63	38	42	30	14
6	**6**	**9**	**12**	**11**	**10**	**10**	**12**	**13**	**15**	**17**	**20**	**22**	**21**	**18**	**19**	**16**	**15**	**16**	**22**	**26**	**28**	**30**	**32**	**30**	**17.9**
7	25	20	19	23	24	28	30	35	28	29	45	32	38	50	47	43	40	42	50	42	44	51	52	33
8	20	28	44	36	23	14	11	15	14	15	15	15	12	18	14	11	8	6	7	2	3	—2	0	—3
9	0	7	9	8	7	0	9	18	15	14	15	13	±p	±p	±p	±p	±p	±p	±p	±p	±p	±p	18	17
10	23	30	±p	5	12	18	15	12	23	10	18	20	8	11	15	12	15	6	24	+p	+p	+p	+p	18
11	8	8	±p	±p	+p	9	8	+p	18	15	13	18	24	±p	±p	18	12	15	19	14	16	13	19	11
12						14	18	17	28	14	16	18	22	23	28	34	40	36	23	24	18	16	13	10
13	**7**	**11**	**12**	**13**	**12**	**10**	**13**	**16**	**23**	**24**	**17**	**16**	**14**	**18**	**19**	**24**	**23**	**25**	**24**	**25**	**21**	**19**	**16**	**13**	**17.3**
14	**17**	**13**	**12**	**10**	**8**	**9**	**9**	**10**	**13**	**16**	**20**	**21**	**19**	**19**	**20**	**21**	**22**	**21**	**23**	**21**	**18**	**16**	**15**	**14**	**16.1**
15	15	14	13	12	12	13	13	16	25	16	+p	+p	+p	16	19	18	21	19	23	23	19	23	25	15
16	8	9	9	6	10	15	17	14	13	12	10	13	10	13	13	13	10	10	10	10	10	10	8	7
17	6	5	4	4	3	2	2	1																
18						4	4	5	4	1	2	5	10	13	12	15	16	16	14	12	15	9	10	8
19	**10**	**10**	**11**	**11**	**14**	**14**	**15**	**15**	**18**	**22**	**20**	**18**	**15**	**16**	**15**	**15**	**17**	**19**	**22**	**22**	**22**	**18**	**14**	**15**	**16.2**
20	10	11	17	20	25	+p	25	22	+p	17	16	14	22	24	25	+p	+p	22	16	13	12	12	10	9
21	8	8															13	8	9	11	11	17	18	11
22	13	9	9	23	±p	±p	±p	+p	+p	46	19	21	25	27	27	38	61	63	52	48	50	49	50	55
23	30	23	19	15	18	37	+p	±p	12	3	4	30	57	38	±p	±p	±p	±p	23	42	19	10	8	8
24	9	11	12	10	10	10	13	20	31	24	35	32	37	33	47	45	43	40	55	+p	+p	+p	63	39
25	34	28	22	13	9	11	8	11																
26																								
27																								
28										12	15	12	12	13	12	15	3	2	2	3	3	—5	0	2	
29	2	2	2	3	2	0	2	8	6	±p	±p	±p	±p	15	13	7	12	16	30	±p	±p	18	—p	18	
30	—20	0	12	7	15	23	35	29	26	19	16	14	14	19	18	16	12	14	15	20	19	15	15	10	
31	13	10	10	9	12	16	40	32	45	42	51	34	52	64	59	+p	60	46	+p	+p	+p	+p	76	72	
M.	**11.0**	**12.0**	**13.2**	**12.8**	**12.4**	**10.6**	**11.8**	**14.4**	**18.6**	**20.4**	**20.4**	**20.2**	**18.2**	**19.0**	**20.0**	**21.4**	**22.2**	**24.2**	**24.6**	**26.8**	**26.2**	**24.6**	**21.2**	**19.2**	**18.6**

H = 95.4 m

h_e = 4.5

Monatsmittel des luftelektrischen Potentialgefälles für jede Stunde (in 10 Volt/meter).

	1a	2a	3a	4a	5a	6a	7a	8a	9a	10a	11a	12a	1p	2p	3p	4p	5p	6p	7p	8p	9p	10p	11p	Mittel.
Jan.	18.0	15.1	13.0	13.1	13.4	13.0	15.7	17.9	19.3	19.3	18.6	20.3	20.7	20.4	18.4	20.0	19.6	17.1	18.1	17.9	17.0	18.3	15.3	14.9	17.4
Febr.	12.7	10.7	10.7	8.3	7.3	10.0	11.3	16.0	13.7	17.0	18.3	21.3	19.7	17.7	15.0	14.7	17.3	18.3	19.0	22.0	20.7	17.0	15.3	14.0	15.3
März	17.2	14.6	13.8	13.8	12.8	14.6	19.2	19.0	23.6	24.6	21.6	21.0	19.2	20.0	19.4	17.4	17.0	19.6	21.0	23.0	23.2	21.2	20.4	18.0	18.8
April	9.2	10.5	9.8	9.0	7.2	7.0	6.5	6.8	9.0	9.0	10.2	10.8	11.0	11.5	12.2	13.0	12.2	11.8	10.8	13.0	12.8	12.5	11.8	11.2	10.4
Mai	7.0	6.8	6.7	6.5	6.2	5.8	7.3	8.5	9.7	9.2	8.0	7.5	8.3	9.2	9.3	9.3	9.0	9.0	8.8	8.0	8.3	8.5	8.7	8.0	8.1
Juni	8.2	8.8	7.5	7.0	7.0	7.2	7.8	9.2	10.2	10.5	9.2	9.0	8.5	9.0	9.0	8.5	7.8	8.2	8.0	8.2	7.5	8.2	8.0	9.2	8.4
Juli	5.0	5.7	4.3	4.3	6.0	5.7	6.0	7.0	8.0	8.3	7.3	7.3	7.7	8.7	8.0	7.7	8.0	8.3	7.7	7.3	8.0	7.3	7.3	7.0	7.0
Aug.	8.4	8.1	7.6	7.0	7.1	7.6	8.0	10.1	10.4	10.3	10.3	16.3	10.1	10.1	9.6	9.6	9.0	8.1	8.1	8.7	8.3	8.3	7.9	7.1	8.8
Septbr.	9.5	9.5	9.0	8.8	7.5	8.3	9.3	10.7	10.8	12.0	11.2	11.5	11.5	11.2	11.0	11.5	10.7	10.5	11.2	11.8	13.2	11.7	12.7	11.0	10.7
Oktbr.	8.5	8.0	8.0	7.4	6.9	7.4	8.0	11.1	12.4	12.5	13.0	13.1	12.2	12.5	11.6	10.2	10.9	11.8	13.9	13.0	13.0	12.4	9.8	9.1	10.7
Novbr.	14.0	12.8	12.0	12.2	10.0	9.4	10.4	13.6	16.6	17.6	16.8	19.4	18.2	19.0	17.0	16.4	21.4	25.8	25.2	24.2	25.8	24.6	22.4	18.4	17.7
Decbr.	11.0	12.0	13.2	12.8	12.4	10.6	11.8	14.4	18.6	20.4	20.4	20.2	18.2	19.0	20.0	21.4	22.2	24.2	24.6	26.8	26.2	24.6	21.2	19.2	18.6
Jahr	10.7	10.2	9.7	9.2	8.7	9.0	10.0	12.0	13.5	14.2	13.7	14.3	13.8	14.0	13.4	13.3	13.8	14.4	14.7	15.3	15.4	14.6	13.4	12.3	12.7

Täglicher Gang des luftelektrischen Potentialgefälles nach Abweichungen vom Monatsmittel (in 10 Volt/meter).

Jan.	0.6	-2.3	-3.5	-4.3	-4.0	-3.5	-1.7	0.5	1.9	1.9	1.2	2.9	3.3	3.0	1.0	2.6	2.2	-0.3	0.7	0.5	0.5	0.9	-2.1	-2.5	
Febr.	-2.6	-4.0	-4.6	-7.0	-8.0	-5.3	-4.6	0.7	-1.6	1.7	3.0	6.0	4.4	2.4	-0.3	-0.6	2.0	3.0	3.7	6.7	5.4	1.7	0.7	-1.3	
März	-1.6	-4.2	-5.0	-5.0	-6.0	-4.2	-2.6	0.2	4.8	5.8	2.8	2.2	0.4	1.2	0.6	-1.4	-1.8	0.8	2.2	4.2	4.4	2.4	1.0	-0.8	
April	-1.2	0.1	-0.6	-1.4	-3.2	-3.4	-3.0	-3.6	-1.4	-1.4	-0.2	0.4	0.6	1.1	1.8	2.6	1.8	1.4	0.4	2.6	2.4	2.1	1.4	0.8	
Mai	-1.1	-1.3	-1.4	-1.6	-1.9	-2.3	-0.8	0.4	1.6	1.1	-0.1	-0.6	0.2	1.1	1.2	1.2	0.9	0.9	0.7	-0.1	0.2	0.4	0.6	-0.1	
Juni	-0.2	0.4	-0.9	-1.4	-1.4	-1.2	-0.6	0.8	1.8	2.1	0.8	0.6	0.1	0.6	0.6	0.1	-0.6	-0.2	-0.4	-0.2	-0.9	-0.2	-0.4	0.8	
Juli	-2.0	-1.3	-2.7	-2.7	-1.0	-1.5	-1.0	0.0	1.0	1.3	0.3	0.3	0.7	1.7	1.0	0.7	1.0	1.3	0.7	0.3	1.0	0.3	0.3	0.0	
Aug.	-0.4	-0.7	-1.2	-1.8	-1.7	-1.2	0.1	1.3	1.6	1.5	1.5	1.5	1.3	1.3	0.8	0.8	0.2	-0.7	-0.7	-0.1	-0.5	-0.5	-0.9	-1.7	
Septbr.	-1.2	-1.2	-1.7	-1.9	-3.2	-2.4	-1.4	0.0	0.1	1.3	0.5	0.8	0.8	0.5	0.3	0.8	0.0	-0.2	0.5	1.1	2.5	1.0	2.0	0.3	
Oktbr.	-2.2	-2.7	-2.7	-3.3	-3.8	-3.3	-1.8	0.4	1.7	1.8	2.3	2.4	1.5	1.8	0.9	-0.5	0.2	1.1	3.2	2.3	2.3	1.7	-0.9	-1.6	
Novbr.	-3.7	-4.9	-5.7	-5.5	-7.1	-8.3	-7.3	-4.1	-1.1	-0.1	-0.9	1.7	0.5	1.3	-0.7	-1.3	3.7	8.1	7.5	6.5	8.1	6.9	4.7	0.7	
Decbr.	-7.6	-6.0	-5.4	-5.8	-6.2	-8.0	-6.8	-4.2	0.0	1.8	1.8	1.6	-0.4	0.4	1.4	2.8	3.6	5.6	6.0	8.2	7.6	6.0	2.6	0.6	
Jahr	-2.0	-2.5	-3.0	-3.5	-4.0	-3.7	-2.7	-0.7	0.8	1.5	1.0	1.6	1.1	1.3	0.7	0.6	1.1	1.7	2.0	2.6	2.7	1.9	0.7	-0.4	

h_e = 2.5 m

Monatsmittel der luftelektrischen Leitfähigkeit (λ —) für jede Stunde

	1a	2a	3a	4a	5a	6a	7a	8a	9a	10a	11a	12a	1p	2p	3p	4p	5p	6p	7p	8p	9p	10p	11p	Mittel.
Jan.	0.97	1.03	1.07	1.12	1.16	1.12	1.12	1.04	0.97	0.90	0.94	0.93	0.93	0.97	0.97	0.91	0.86	0.94	1.00	1.06	1.01	1.06	1.13	1.07	1.01
Febr.	1.10	1.20	1.30	1.37	1.40	1.37	1.33	1.13	1.07	1.03	1.03	1.00	1.03	1.10	1.27	1.30	1.20	1.17	1.17	1.07	1.07	1.07	1.10	1.13	1.17
März	0.88	0.90	0.88	0.92	0.94	0.96	0.86	0.86	0.82	0.80	0.96	0.98	0.94	0.94	0.86	1.04	1.04	0.88	0.88	0.82	0.78	0.82	0.80	0.86	0.89
April	0.98	1.10	1.10	1.12	1.25	1.22	1.28	1.28	1.30	1.32	1.28	1.22	1.15	1.22	1.20	1.22	1.20	1.22	1.20	1.00	0.92	0.90	0.92	0.95	1.15
Mai	1.16	1.16	1.27	1.32	1.47	1.50	1.60	1.30	1.23	1.23	1.27	1.32	1.37	1.28	1.28	1.28	1.30	1.30	1.35	1.32	1.27	1.15	1.12	1.20	1.29
Juni	1.15	1.18	1.25	1.28	1.35	1.28	1.25	1.20	1.15	1.12	1.20	1.20	1.12	1.10	1.15	1.20	1.28	1.22	1.28	1.30	1.30	1.25	1.22	1.20	1.22
Juli	1.40	1.43	1.40	1.43	1.50	1.53	1.47	1.43	1.40	1.37	1.60	1.67	1.53	1.30	1.50	1.53	1.40	1.50	1.43	1.37	1.27	1.27	1.30	1.33	1.43
Aug.	1.41	1.47	1.46	1.47	1.51	1.46	1.36	1.34	1.37	1.36	1.33	1.36	1.24	1.27	1.33	1.31	1.34	1.43	1.37	1.27	1.27	1.29	1.34	1.37	1.36
Septbr.	1.50	1.50	1.55	1.48	1.55	1.52	1.47	1.43	1.15	1.40	1.40	1.42	1.35	1.33	1.43	1.42	1.43	1.53	1.45	1.43	1.40	1.47	1.42	1.45	1.45
Oktbr.	1.58	1.58	1.64	1.61	1.65	1.58	1.45	1.28	1.22	1.30	1.30	1.29	1.36	1.35	1.40	1.42	1.41	1.21	1.15	1.32	1.38	1.31	1.44	1.49	1.40
Novbr.	1.04	1.14	1.18	1.16	1.24	1.34	1.34	1.16	1.16	1.08	1.04	0.92	0.92	1.02	0.96	0.94	0.82	0.74	0.76	0.82	0.92	0.84	0.84	0.90	1.01
Decbr.	0.98	1.02	1.06	1.10	1.18	1.22	1.26	1.12	0.98	0.90	0.78	0.74	0.82	0.94	0.96	0.94	0.84	0.72	0.66	0.64	0.58	0.58	0.70	0.82	0.90
Jahr	1.18	1.23	1.26	1.28	1.35	1.34	1.32	1.21	1.18	1.15	1.18	1.17	1.15	1.15	1.19	1.21	1.18	1.15	1.14	1.12	1.10	1.08	1.11	1.15	1.19

Täglicher Gang der luftelektrischen Leitfähigkeit (λ —) nach Abweichungen vom Monatsmittel.

Jan.	-0.04	0.02	0.06	0.11	0.15	0.11	0.11	0.03	-0.04	-0.11	-0.07	-0.08	-0.08	-0.04	-0.04	-0.10	-0.15	-0.07	-0.01	0.05	0.00	0.05	0.12	0.06	
Febr.	-0.07	0.03	0.13	0.20	0.23	0.20	0.16	-0.04	-0.10	-0.14	-0.14	-0.17	-0.14	-0.07	0.10	0.13	0.03	0.00	0.00	-0.10	-0.10	-0.10	-0.07	-0.04	
März	-0.01	0.01	-0.01	0.03	0.05	0.07	-0.03	-0.03	-0.07	-0.09	0.07	0.09	0.05	0.05	-0.03	0.15	0.15	-0.01	-0.01	-0.07	-0.11	-0.07	-0.09	-0.03	
April	-0.17	-0.05	-0.05	-0.03	0.10	0.07	0.13	0.13	0.15	0.17	0.13	0.07	0.00	0.07	0.05	0.07	0.05	0.07	0.05	-0.15	-0.23	-0.25	-0.23	-0.20	
Mai	-0.13	-0.13	-0.02	0.03	0.18	0.21	0.31	0.01	-0.06	-0.06	-0.02	0.03	0.08	-0.01	-0.01	-0.01	0.01	0.01	0.06	0.03	-0.02	-0.14	-0.17	-0.09	
Juni	-0.07	-0.04	0.03	0.06	0.13	0.06	0.03	-0.02	-0.07	-0.10	-0.02	-0.02	-0.10	-0.12	-0.07	-0.02	0.06	0.00	0.06	0.08	0.08	0.03	0.00	-0.02	
Juli	-0.03	0.00	-0.03	0.00	0.07	0.10	0.04	0.00	-0.03	-0.06	0.17	0.24	0.10	-0.13	0.07	0.10	-0.03	0.07	0.00	-0.06	-0.16	-0.16	-0.13	-0.10	
Aug.	0.05	0.11	0.10	0.11	0.15	0.10	0.00	-0.02	0.01	0.00	-0.03	0.00	-0.12	-0.09	-0.03	-0.05	-0.02	0.07	0.01	-0.09	-0.09	-0.07	-0.02	0.01	
Septbr.	0.05	0.05	0.10	0.03	0.10	0.07	0.02	-0.02	0.00	-0.05	-0.05	-0.03	-0.10	-0.12	-0.02	-0.03	-0.02	0.08	0.00	-0.02	-0.05	0.02	-0.03	0.00	
Oktbr.	0.18	0.18	0.24	0.21	0.25	0.18	0.05	-0.12	-0.18	-0.10	-0.10	-0.11	-0.04	-0.05	0.00	0.02	0.01	-0.19	-0.25	-0.08	-0.02	-0.09	0.04	0.09	
Novbr.	0.03	0.13	0.17	0.15	0.23	0.33	0.33	0.15	0.15	0.07	0.03	-0.09	-0.09	0.01	-0.05	-0.07	-0.19	-0.27	-0.25	-0.19	-0.09	-0.17	-0.17	-0.11	
Decbr.	0.08	0.12	0.16	0.20	0.28	0.32	0.36	0.22	0.08	0.00	-0.12	-0.16	-0.08	0.04	0.06	0.04	-0.06	-0.18	-0.24	-0.26	-0.32	-0.32	-0.20	-0.08	
Jahr	-0.01	0.04	0.07	0.09	0.16	0.15	0.13	0.02	-0.01	-0.04	-0.01	-0.02	-0.04	-0.04	0.00	0.02	-0.01	-0.04	-0.05	-0.07	-0.09	-0.11	-0.08	-0.04	

TERMIN-BEOBACHTUNGEN

AN

ZEHN STATIONEN IN NORWEGEN

1925.

$H = 642\,m$, $H_b = 644.0\,m$ — $\varphi = 62^0\ 5'$ N

$C_g = 1.25$ mb bei 961 mb — $\lambda = 9^0\ 7'$ E

Januar.

Datum.	Luftdruck. 800 oder 900 + 8	2	7	Luft-Temperatur. Min.	8	2	7	Absolute Feuchtigkeit. 8	2	7	Relative Feuchtigk. 8	2	7	Richtung und Stärke des Windes. 8		2		7		Bewölkung. 8	2	7	Niederschl.	Bemerkungen.
1	09.3	09.4	08.4	-5.7	-4.8	-2.7	-2.6	2.9	3.3	3.2	92	87	84	SW	2	SSE	7	S	2	5	10*	1	0.0	* n, a, p.
2	**87.0**	87.5	88.5	-4.8	-0.8	-0.6	0.6	4.1	3.5	3.2	94	79	66	SSE	5	SSE	6		0	10	4	6	0.5	* n, p.
3	92.6	98.2	00.0	-5.2	-3.4	-0.7	-0.7	2.8	2.6	2.9	79	59	66		0		0	SE	2	6	3	10	0.0	
4	06.2	07.9	10.1	-4.0	-2.3	-5.8	-7.2	3.0	2.6	2.5	78	87	93	SW	2		0		0	10	2	7	0.1	* n.
5	17.3	15.0	14.8	-10.5	-9.5	-5.6	-5.0	1.9	2.3	2.6	81	76	82		0	SSE	2	W	2	6	6	9		
6	18.9	26.1	29.0	-9.5	-4.1	-3.2	-6.2	3.2	3.3	2.8	95	89	95	SW	1	NW	3		0	10*	6	6	0.6	* n, a, p.
7	19.2	16.0	21.8	-7.6	-4.6	-5.0	-0.2	3.3	2.9	4.3	98	95	95		0		0		0	10*	10*	10	8.1	* n, a.
8	27.1	25.4	22.5	-6.0	-1.6	2.8	1.7	4.1	4.1	4.3	98	72	81		0	N	1		0	8	6	7	7.2	* n.
9	17.4	24.0	30.3	-3.0	-1.7	-1.7	-4.8	4.0	3.2	2.7	00	79	84		0	WSW	2	E	1	10*	9	3	0.2	* n, a.
10	37.9	34.7	31.1	-7.0	-6.0	-1.3	-1.2	2.7	2.9	3.4	90	67	82		0	S	3		0	10	8	10	0.1	* n.
11	32.9	35.8	39.9	-6.0	0.8	4.0	0.4	**4.8**	4.4	4.0	98	72	84		0	NNW	2	NNW	2	10*	4	6	14.5	* n, a.
12	41.8	41.5	40.9	-0.5	0.5	0.9	-1.5	3.7	3.5	3.1	78	72	75		0	W	1		0	10	10	10	1.0	
13	37.5	35.8	36.8	-7.0	-6.2	-5.5	-6.5	2.7	2.9	2.7	92	92	94		0	SSE	2	NNE	2	6	8	7		
14	28.3	17.5	17.4	-8.0	-0.3	3.0	2.3	3.9	4.6	4.4	87	81	81	S	4	S	9	SSW	8	10	8	9●		● * a, ● p.
15	18.4	18.9	24.1	-0.3	1.8	-0.8	-2.0	4.0	3.9	3.7	76	92	92	SSW	8		0		0	9	10*	10*	2.5	● * n, * a, p.
16	32.5	32.6	34.6	-3.5	2.2	**4.6**	3.5	4.5	4.3	**4.8**	84	69	82	SW	3	N	3		0	10	10	10●	0.7	● * n, ● p.
17	39.4	42.1	42.0	2.2	3.6	4.2	0.9	4.3	3.9	3.4	73	63	69		0	N	1	SW	2	10	4	4	0.0	
18	41.6	41.3	36.5	-3.0	-2.4	4.5	3.8	3.3	4.6	4.5	87	73	75		0	S	2	SSW	4	4	6	10		
19	49.7	57.4	64.5	-3.2	-3.2	-3.4	-3.1	3.6	2.6	2.7	96	72	72	WNW	4	WNW	3		0	10	1	0	1.8	* n, a.
20	62.6	62.1	61.0	-14.0	-13.8	-10.4	-12.8	1.4	1.8	1.6	84	84	90		0	W	1		0	0	0	0	0.0	
21	58.0	57.5	57.8	-14.8	-13.8	-12.8	-12.8	1.5	1.6	1.6	90	87	90		0		0		0	0	0	0		
22	56.6	54.8	52.7	-13.8	-11.4	-10.5	-11.7	1.8	1.8	1.7	90	86	90		0		0		0	10	4	3		
23	45.8	44.3	44.4	-14.7	-13.7	-12.8	-10.3	1.6	1.6	1.9	98	92	92		0		0		0	0	3	6		
24	48.2	51.7	54.2	-14.5	-7.5	-4.7	-9.0	2.2	2.4	2.0	79	72	86		0		0		0	1	1	0		
25	61.4	65.5	66.3	-11.8	-9.7	-9.6	-12.6	2.2	2.1	1.7	98	92	95		0		0		0	0	5	0		
26	**66.7**	65.3	61.7	-15.0	-13.4	-10.8	-12.4	1.6	1.7	1.4	91	81	75		0		0		0	0	0	0		
27	56.1	54.3	51.8	-15.0	-15.0	-11.7	-15.5	1.1	1.3	**1.0**	76	72	76		0		0		0	0	0	0		
28	42.6	40.9	38.1	-18.8	-18.8	-16.0	-18.2	**1.0**	1.2	**1.0**	86	84	86		0	W	1		0	0	1	7		
29	32.6	25.4	15.9	**-19.0**	-13.8	-11.3	-8.4	1.5	1.8	2.1	89	90	85		0		0	S	3	10	6*	10*		* a, p.
30	04.5	04.0	05.3	-13.8	-4.0	-1.7	0.2	3.2	3.7	4.3	95	90	92	S	2	S	2		0	10	10	7*	1.5	* n, a, p.
31	00.7	01.2	06.8	-4.0	-2.2	-0.8	-0.8	3.7	3.8	4.0	93	86	92	S	3	S	2		0	10*	10	9	2.2	* n, a, p.
M.	32.0	32.1	32.6	-8.4	-5.8	-4.1	-4.9	2.9	2.9	2.9	88	80	84		1.1		1.7		0.9	6.6	5.3	5.7	41.0	

Februar.

Datum.	Luftdruck. 800 oder 900 + 8	2	7	Luft-Temperatur. Min.	8	2	7	Absolute Feuchtigkeit. 8	2	7	Relative Feuchtigk. 8	2	7	Richtung und Stärke des Windes. 8		2		7		Bewölkung. 8	2	7	Niederschl.	Bemerkungen.
1	15.3	20.8	25.5	-5.5	-4.7	-4.0	-5.2	2.4	2.4	3.0	73	69	96		0		0		0	7	8*	9*	1.0	* n, a, p.
2	34.0	30.0	25.9	-9.5	-8.8	-3.8	-5.8	1.8	2.6	2.3	76	75	76		0	SSW	2		0	5	10	7	3.5	* n, a.
3	27.7	27.0	22.1	-8.8	-3.8	0.8	**1.7**	3.0	3.2	3.3	84	64	63	E	2	SSW	1	WSW	3	4	6	10	1.0	* n.
4	20.1	24.8	28.6	-8.0	-2.8	-3.0	-0.4	2.7	3.2	3.1	73	87	69		0	W	2	SW	1	10*	10*	6	0.0	* n, a.
5	15.3	10.4	10.0	-6.0	-0.2	-1.2	-1.7	3.4	3.8	2.7	75	90	67	S	5	SW	9	SSW	8	10	4	6	0.8	* a.
6	03.0	07.9	11.7	-5.0	-3.0	-2.0	-4.3	3.6	3.9	3.3	98	98	98	SSW	9	W	2		0	10	10*	3	2.4	* n, a, p.
7	19.0	23.4	27.0	-9.8	-7.7	-6.8	-10.8	2.5	2.6	1.9	96	95	93		0		0	E	2	9	1	0	1.4	* n.
8	18.1	10.8	06.4	-16.0	-6.8	-5.1	-3.2	2.6	2.6	3.5	92	82	95	S	8	S	9	S	7	10	10*	10*		* a, p.
9	96.7	96.2	96.7	-8.0	-1.8	-1.6	-2.2	3.8	3.2	3.1	95	79	79	S	5	WSW	4	SSW	4	10	10*	7	2.0	* a, p.
10	09.7	09.1	03.6	-8.2	-5.5	-2.8	-1.6	2.2	2.7	3.2	72	72	78	S	2	S	2	S	2	8	10*	10	0.5	* a, p.
11	04.3	06.0	08.5	-5.5	-1.0	-0.5	-1.3	3.9	3.6	3.5	90	79	84	S	3	S	6	SE	2	10	10*	10	0.6	* n, a, p.
12	05.5	**94.7**	96.0	-3.6	-2.0	1.3	-0.6	3.7	4.3	4.0	93	86	91		0	SSE	6	W	8	10*	5	10*	0.4	* n, a, p.
13	12.4	17.9	19.5	-4.0	-2.0	0.5	-0.3	2.6	3.4	2.9	64	69	64	S	2	S	3	SSE	4	7	8	10	3.7	* a.
14	23.4	25.7	25.6	-3.0	1.2	1.6	0.8	4.2	4.0	4.2	82	79	87	S	7	S	3	SW	2	10*	10*	10*	0.2	* n, a, p.
15	21.2	21.4	25.3	-2.8	1.3	0.6	0.5	**4.5**	**4.5**	4.4	89	93	92		0	S	2		0	10*	10*	10	2.0	* n, a, p.
16	29.9	28.1	26.8	-5.5	-4.8	-2.0	-1.0	3.1	3.4	4.0	97	84	92		0		0		0	10	10	10	2.1	
17	26.2	25.7	24.5	-5.0	-2.1	0.0	-5.2	3.6	3.5	2.7	91	75	86		0	S	1		0	10	3	1		
18	27.4	28.4	28.1	-9.5	-7.2	-6.2	-9.0	2.4	2.4	2.0	89	81	86		0		0		0	10	1	3		
19	32.0	33.7	34.2	-15.6	-14.9	-8.1	-13.8	1.1	1.3	**0.9**	73	51	57		0		0		0	0	0	0	0.0	* n.
20	35.8	35.6	35.2	**-20.0**	-18.3	-12.6	-14.1	**0.9**	1.1	1.0	79	61	63		0		0		0	2	1	3		
21	33.1	32.2	34.2	-18.3	-15.7	-11.2	-12.8	1.1	1.6	1.6	81	78	90		0		0		0	10*	8	2	1.1	* n, a, p.
22	36.7	37.4	37.3	-15.7	-15.0	-9.2	-9.6	1.4	1.8	1.8	92	75	79		0		0		0	6	7	6	0.9	
23	**38.2**	38.1	37.3	-15.3	-9.5	-6.6	-7.6	1.9	2.0	2.1	85	70	78		0	S	4		0	10*	3	9	0.0	* n, a.
24	35.8	35.5	33.3	-10.2	-8.8	-6.6	-7.8	1.7	1.8	1.9	72	64	76		0	S	2		0	10*	8	7	0.2	* n.
25	28.5	28.4	27.8	-9.0	-4.8	-2.6	-4.5	2.1	2.8	2.9	66	72	87	N	4	S	3	S	2	10	10*	10*	0.4	* n, a, p.
26	26.2	26.4	26.6	-4.8	-3.2	-1.5	-1.8	3.3	3.4	3.3	89	81	81	S	2	S	3	S	2	10*	10*	10*	1.7	* n, a, p.
27	26.9	27.2	26.4	-5.0	-4.6	-4.7	-7.7	2.5	2.0	1.7	76	63	66	S	2	S	1		0	10	10*	10*	1.1	* n, a, p.
28	26.9	26.8	27.1	-9.5	-7.5	-4.2	-4.6	2.2	2.5	2.6	84	75	78	S	2	SSW	2		0	10	9*	9	0.0	* a.
M.	22.5	22.5	22.5	-8.8	-5.8	-3.6	-4.8	2.6	2.8	2.7	83	77	80		1.9		2.4		1.7	8.5	7.2	7.1	27.0	

$H = 642$ m, $H_b = 644.0$ m
$C_\varphi = 1.25$ mb bei 961 mb

$\varphi = 62^0\ 5'$ N
$\lambda = 9^0\ 7'$ E

März.

Datum.	Luftdruck. 800 oder 900 + 8	2	7	Luft-Temperatur. Min.	8	2	7	Absolute Feuchtigkeit. 8	2	7	Relative Feuchtigk. 8	2	7	Richtung und Stärke des Windes. 8	2	7	Bewölkung. 8	2	7	Niederschl.	Bemerkungen
1	31.1	33.4	36.0	-9.5	-6.7	-2.4	-4.6	2.5	2.8	3.0	89	72	92	0 S 2		0	10	10*	10*	0.2	✱ n, a, p.
2	41.0	44.7	45.9	-6.8	-5.5	-4.3	-11.1	2.1	1.7	1.2	69	50	61	W 2	0	0	10	1	0	0.5	✱ n.
3	48.6	46.6	45.7	-14.0	-12.8	-5.0	-5.7	1.4	1.8	1.9	79	56	63	0	0	0	9	10	9		
4	38.1	38.0	36.8	-13.0	-1.5	-1.1	-4.0	3.4	2.8	2.7	82	67	78	S 2 N	3 N	4	9*	9	2	0.0	✱ n, a, p.
5	28.3	13.6	09.3	-4.8	-3.0	-0.6	-0.8	3.0	3.7	3.4	82	85	78	S 2 S	6 W	2	10*	10	6	0.0	✱ n, a, p.
6	08.4	10.4	09.2	-4.8	-1.7	-0.4	-2.2	3.9	3.3	3.8	97	75	96	W 2 W	2	0	10*	8	10*	1.6	✱ n, a. p.
7	**08.1**	10.6	12.9	-7.7	-6.2	-5.8	-11.2	2.8	2.0	1.0	94	66	50	0 N	2 NE	2	10	10	7	3.9	✱ n, a.
8	15.7	16.2	17.4	-16.7	-16.7	-8.2	-13.6	0.9	1.3	0.9	66	51	51	0 S	3 N	1	4	1	1	0.0	
9	23.7	26.5	30.2	**-22.1**	**-22.1**	-11.7	-16.7	**0.6**	1.0	0.7	69	53	53	0 S	2 N	2	0	0	0		
10	37.0	40.2	41.0	**-22.1**	-12.4	-6.4	-8.9	1.3	1.3	1.3	73	47	53	NW 2 NW	2 N	1	1	0	9		
11	45.7	50.0	**50.3**	-20.5	-12.3	-10.3	-11.4	1.4	1.0	0.9	78	48	45	N 2 NE	3 NW	2	3	1	8	0.0	✱ n.
12	48.1	45.6	43.5	-14.8	-12.5	-5.7	-7.5	1.4	1.6	1.9	75	51	72	NW 2 NW	2 N	2	0	7	10	0.3	✱ n.
13	39.9	36.9	33.9	-17.0	-16.3	-9.6	-13.2	0.7	1.0	0.8	55	45	50	N 2 N	1 NW	2	1	0	5		
14	33.9	34.1	33.9	-21.1	-21.1	-10.5	-13.8	**0.6**	1.2	0.8	61	53	51	0 N	1 NW	2	0	9	10		
15	39.8	42.7	45.1	-21.1	-14.3	-3.2	-5.4	1.4	2.2	2.0	90	61	66	0	0 W	2	4	10*	10	0.1	✱ n, a, p.
16	48.5	45.7	41.5	-14.3	-10.2	-8.2	-9.3	1.6	1.8	1.8	72	70	78	S 4 S	6 S	5	10*	10*	10	0.0	✱ n, a, p.
17	44.0	46.6	46.7	-10.2	-5.3	-0.8	-3.2	2.7	2.3	2.0	86	53	55	S 2 N	2 S	2	9*	4	10	1.2	✱ n.
18	43.6	43.9	42.2	-5.3	-3.5	**5.5**	3.6	3.4	3.6	3.5	95	53	59	0 W	3 NW	1	10*	6	8	2.2	✱ n, a.
19	37.9	36.4	34.2	-3.5	0.8	1.4	-1.6	**4.1**	2.7	2.4	84	53	60	W 1 N	1	0	10*	2	2	0.0	✱ n, a.
20	29.1	29.4	28.9	-7.2	-4.6	-0.4	-3.8	2.1	3.0	2.8	66	67	78	NE 2 W	2 NW	1	8	10	10	1.1	✱ n, a.
21	30.5	32.3	33.6	-6.7	-4.6	-0.4	-4.5	2.7	2.7	2.4	81	60	72	NNW 2 NW	2 NW	2	8	10	7	0.2	
22	36.8	37.2	36.2	-8.8	-7.5	-1.2	-3.4	2.4	2.2	2.4	91	53	66	NE 1 N	1 N	1	6	8	9		
23	33.6	31.1	28.3	-14.5	-13.3	-2.5	-3.0	1.5	2.2	2.5	86	56	66	0 S	2 S	4	1	9	10		
24	24.5	25.8	28.8	-13.3	-2.5	-0.8	-1.8	3.1	3.6	3.3	79	81	82	S 5 SSW	7 S	5	6*	10*	10	0.0	✱ n, a.
25	34.3	36.5	37.1	-6.0	-4.3	1.2	-0.7	2.8	3.5	3.4	84	70	79	N 2 ESE	2	0	10	10	10	0.0	✱ n.
26	40.7	41.4	41.7	-7.8	-6.8	-0.2	-3.4	2.3	2.9	2.4	82	64	66	0 S	2 S	1	5	1	0		
27	40.8	38.7	36.5	-10.8	-10.3	0.1	-2.1	2.0	2.9	3.6	93	64	90	0 S	1 N	1	4	10	10		✱ p.
28	35.1	33.5	32.2	-13.0	-7.2	-3.0	-5.6	2.1	2.0	1.7	75	53	54	NW 1 N	3 W	2	2	7	8	0.7	
29	30.8	30.2	30.1	-13.8	-9.4	-0.3	-5.7	1.8	2.3	1.6	79	50	55	0 W	2 S	2	2	8	4		
30	22.7	20.2	18.7	-9.4	-5.3	3.8	3.0	2.7	**4.1**	4.0	87	67	70	S 6 S	3 SSW	6	9	9	10*		△ u. ✱ p.
31	15.3	20.8	22.5	-5.3	0.8	2.9	-1.6	3.2	3.9	2.6	66	69	63	W 1 NW	3	0	7	6	2	0.0	
M.	33.4	33.5	33.3	-11.8	-8.3	-2.8	-5.6	2.2	2.4	2.2	80	60	66	1.4	2.3	1.8	6.1	6.6	7.0	12.0	

April.

Datum.	Luftdruck. 8	2	7	Luft-Temperatur. Min.	8	2	7	Absolute Feuchtigkeit. 8	2	7	Relative Feuchtigk. 8	2	7	Richtung und Stärke des Windes. 8	2	7	Bewölkung. 8	2	7	Niederschl.	Bemerkungen
1	25.0	23.1	24.7	-10.0	-7.2	-1.7	-5.0	1.9	2.2	**1.8**	70	54	57	NW 2 N	2 NW	2	9	4	1		
2	22.8	16.3	16.7	**-12.3**	-5.6	-1.0	-1.2	2.1	3.0	3.2	69	70	75	SSE 3 S	7 S	8	10	10	7		✱ p.
3	18.7	20.0	25.2	-8.2	-6.0	-1.2	-4.1	2.6	2.8	2.3	86	66	67	S 2 W	2 NW	2	1	10*	4	0.3	✱ n, a, p.
4	33.2	36.5	36.6	-7.0	-3.6	1.9	-0.9	2.1	2.3	2.3	60	45	53	NNW 2 S	2 S	3	4	8	10	1.0	
5	38.1	38.5	39.1	-4.0	-1.4	2.4	2.0	2.9	3.0	2.7	70	55	51	S 4 S	3 S	2	7	4	9		
6	41.3	41.8	41.8	-5.6	0.2	5.0	3.0	3.3	3.5	2.7	70	54	47	0 S	5 S	2	10	8	6		
7	44.0	43.9	44.1	-5.8	-2.2	4.7	3.0	2.8	3.1	2.7	72	49	47	0 S	2 S	2	1	0	1		
8	45.3	44.5	43.4	-6.0	-2.9	6.2	5.0	2.7	3.1	2.9	72	44	45	0 S	2 S	2	0	0	0		
9	43.9	42.9	42.9	-4.8	-1.4	6.4	5.3	3.0	3.6	3.5	72	50	53	0 S	3	0	7	7	1		
10	48.3	48.2	49.2	-4.4	0.2	7.8	5.5	3.3	3.9	3.7	72	50	55	0	0 S	1	0	0	0		
11	**50.3**	**50.3**	48.5	-4.6	0.4	**8.4**	6.8	3.8	4.3	3.5	79	53	47	0 S	1	0	0	0	0		
12	46.5	43.6	42.2	-4.5	0.2	8.0	5.4	3.7	4.1	3.4	79	53	51	0 S	2	0	0	6	10		
13	38.0	34.6	32.5	-4.8	-0.2	7.5	5.0	3.2	3.7	3.4	72	48	53	0 SSW	2 S	2	4	8	3		
14	30.6	31.1	30.6	-1.0	2.3	2.8	1.4	5.0	**5.1**	5.0	90	90	98	S 5 S	3 S	1	10	10	10*		✱ a, p.
15	23.9	21.4	16.2	-0.6	0.8	3.2	2.0	4.7	4.7	4.0	96	82	75	S 1 S	3 S	4	10*	10*	6	3.7	✱ n, ● ✱ a, p.
16	**11.2**	12.3	13.8	-0.5	1.2	3.1	1.8	4.5	**5.1**	5.0	89	90	94	S 4 S	3 S	2	10*	10●	9●	2.2	✱ n, ● ✱ a, p.
17	19.0	20.1	22.0	-3.2	0.8	5.4	1.9	4.2	3.8	3.2	87	56	59	0 W	2 N	3	9	9	10	0.4	● ✱ a.
18	24.0	25.9	27.2	-4.0	1.0	3.5	1.0	3.4	2.8	2.4	70	47	48	0 WNW	2 N	2	3	4	2	0.7	✱ n.
19	30.1	34.3	35.2	-2.1	1.4	4.0	2.2	3.7	3.7	4.1	72	61	75	NW 1 N	2 N	1	9	9	9		
20	38.6	36.4	35.7	-1.2	2.0	7.0	2.2	4.0	4.4	5.0	75	59	93	S 1 SW	2	0	9	10●	10		● a, p.
21	39.8	41.1	40.2	-2.8	0.6	2.8	2.8	3.2	2.8	2.5	66	50	45	W 2 NW	2 N	1	3	8	6	0.0	
22	33.9	30.8	28.3	-5.0	1.4	5.6	3.8	3.1	3.2	3.9	60	47	63	S 6 S	6	0	10	10	7		
23	17.1	16.2	19.3	1.0	2.8	5.8	3.6	4.6	4.9	2.9	82	72	49	ESE 6 SSE	6	0	10	10●	2		● a, p.
24	22.2	21.8	22.3	-5.6	-1.4	3.7	2.6	2.9	3.0	3.2	69	50	57	0 SSW	2 SSW	1	0	4	8	1.2	
25	22.9	22.7	23.4	-3.0	1.7	4.6	2.7	3.8	3.5	3.3	73	54	59	S 3 S	2 S	2	9	10	7		
26	29.6	30.1	31.4	-5.8	0.0	6.1	4.5	3.0	3.3	3.1	66	47	50	0	0	0	0	5	0		
27	34.3	34.5	34.8	-5.5	0.6	4.0	2.4	3.7	3.1	3.4	76	51	61	0 W	2 N	1	1	4	9		
28	33.9	33.3	34.0	-4.0	0.5	5.3	4.3	3.7	3.6	3.1	78	54	49	0 S	1 SSW	2	8	4	5		
29	39.2	38.2	37.9	-7.0	-0.8	5.5	5.8	3.3	3.4	3.2	76	50	47	0 SSE	2	0	0	1	3		
30	36.2	33.5	31.7	-5.0	0.4	4.9	3.0	3.1	3.1	2.5	66	47	43	0 NNE	2 WNW	2	5	10	7		
M.	32.7	32.3	32.4	-4.6	-0.5	4.4	2.6	3.4	3.5	3.3	74	57	59	1.4	2.5	1.6	5.3	6.4	5.4	9.5	

$H = 642$ m, $H_b = 644.0$ m
$C_g = 1.25$ mb bei 961 mb

$\varphi = 62^0\ 5'$ N
$\lambda = 9^0\ 7'$ E

Mai.

Datum.	Luftdruck. 800 oder 900 + 8	2	7	Luft-Temperatur. Min.	8	2	7	Absolute Feuchtigkeit. 8	2	7	Relative Feuchtigk. 8	2	7	Richtung und Stärke des Windes. 8	2	7	Bewölkung. 8	2	7	Niederschl.	Bemerkungen.
1	29.2	30.1	32.6	-2.2	1.0	3.2	2.6	3.6	3.2	**3.1**	73	55	55		0 WNW	3 NNW 1	9	1	2		
2	35.9	35.7	35.6	**-3.5**	0.5	7.8	6.2	3.6	3.9	4.0	76	51	57		0 S	2 S 2	0	2	10		
3	30.9	30.3	33.3	0.5	1.2	2.2	2.0	4.9	5.1	4.8	98	94	90		0	0 NW 2	10●	10●	10	1.8	● ✱ n, a, p.
4	39.2	39.5	40.1	-1.5	2.0	7.2	7.5	4.6	3.8	**3.1**	85	50	41		0 S	1 0	3	1	5	3.4	
5	41.7	41.7	42.2	-1.3	4.0	11.1	9.2	4.0	4.0	3.6	66	41	41		0 S	2 SW 1	7	10	10		
6	44.1	42.0	40.9	-0.2	4.6	12.6	8.7	4.7	5.7	5.0	75	52	59	SSW	1 S	3 S 2	7	9	9		
7	39.4	38.0	37.8	2.0	6.3	8.7	4.6	5.1	5.0	5.4	73	59	86	SSW	4 S	5 S 4	1	9	10		
8	36.6	36.4	36.0	2.6	4.4	6.8	6.0	5.8	6.0	5.8	93	82	84	S	1 S	4 S 2	10●	10	10	2.0	● n.
9	36.3	35.9	35.3	2.0	6.6	11.1	7.2	5.7	5.9	6.4	79	60	84	S	3 S	3 S 2	5	9	9		● p.
10	35.2	36.7	38.0	4.2	7.8	9.8	8.4	6.1	4.4	4.4	78	49	54	S	3 S	2 S 2	5	8	8	0.0	
11	38.3	35.9	34.2	0.8	6.3	12.4	6.6	5.1	5.4	5.9	73	50	82		0 SSE	5 S 2	9	9	10		● p.
12	32.1	34.3	36.1	2.0	5.6	10.8	9.7	5.3	5.5	4.8	79	57	53	S	6 S	4 S 2	10	6	10	6.2	● n, a.
13	36.5	36.8	40.5	2.5	6.3	6.9	8.3	4.9	5.5	4.1	69	75	51	S	2 S	2 WSW 3	9	10●	2	0.0	● a, p.
14	44.2	44.7	45.7	0.6	5.1	9.8	9.4	4.7	4.5	3.8	72	54	43	S	1 W	3 S 2	9	10	5	0.2	
15	47.0	45.0	43.0	-2.0	4.2	11.5	11.8	4.4	4.2	3.3	72	41	32	S	1 SW	2 S 2	0	1	1		
16	42.3	40.7	41.3	-0.8	6.6	14.3	13.6	4.3	4.7	4.2	59	39	36		0 SSW	2 0	0	1	1		
17	43.4	43.2	44.4	2.8	9.8	**18.4**	16.7	6.6	7.5	6.6	73	48	47	S	2 S	3 S 3	5	6	8		
18	**48.5**	47.4	46.7	5.0	11.2	17.2	18.2	7.5	6.3	5.7	75	43	37	S	2 S	5 0	1	1	0		
19	48.4	46.6	46.3	5.0	10.4	**18.4**	16.1	6.6	5.6	4.9	70	35	36		0 S	2 0	0	0	0		
20	43.6	39.9	37.4	1.5	10.2	14.5	10.0	6.2	5.4	5.9	67	44	64	N	1 NW	4 0	4	9	8		● p.
21	36.1	35.2	33.8	1.2	4.2	7.4	5.8	3.4	3.5	3.4	55	45	50	WNW	4 SSW	2 W 4	6	7	5	0.0	
22	30.2	28.5	28.7	-0.3	3.7	6.2	4.8	3.9	3.6	4.1	66	50	64	WNW	1 S	1 S 2	10	10	10		
23	31.3	31.5	31.5	-0.7	2.4	5.6	4.8	5.0	5.8	4.9	92	85	76	SSW	1 S	4 S 2	10●	10●	9	1.0	● ✱ n, ● a, ● ✱ p.
24	34.3	33.9	35.2	-0.7	2.7	7.6	7.1	4.0	4.6	4.7	73	59	63	SSE	2 S	2 S 3	10	10	10	4.3	● ✱ n.
25	34.8	34.4	34.6	1.0	3.8	7.8	8.6	5.4	5.7	5.9	89	72	70	S	3 S	3 S 2	10	10	10	0.2	● n, a.
26	34.5	33.9	32.6	3.0	6.1	9.8	7.3	5.7	6.9	6.5	82	76	86	SSW	1 S	4 S 5	10	10●	9	0.0	● a, p.
27	31.0	30.6	29.4	3.0	7.4	9.0	7.7	6.2	6.4	6.6	81	75	84	S	4 SSE	4 S 6	10	9	10	0.6	● p.
28	24.8	25.3	24.4	6.0	9.3	10.6	10.3	8.1	8.1	8.0	94	85	87	S	2 S	7 S 9	10	10●	9	2.5	● n, a, p.
29	28.3	27.5	27.0	8.8	11.3	10.8	10.1	8.0	**9.0**	7.8	81	94	84	SSW	3 SSE	5 SSE 4	9	10●	10●	1.2	● n, a, p.
30	26.5	**24.2**	**24.2**	6.0	8.4	7.8	9.2	5.4	7.1	7.1	66	90	81	SSE	5 S	8 S 5	8	10●	10	8.6	● n, a, p.
31	25.0	25.7	27.0	4.0	8.6	10.0	9.8	5.5	5.5	4.9	66	60	55	S	6 S	6 SSW 4	9	10	8	3.3	● n, a.
M.	36.4	35.9	36.0	1.7	5.9	9.9	8.7	5.3	5.4	5.1	76	60	62		1.9	3.3 2.5	6.6	7.4	7.4	35.3	

Juni.

Datum.	Luftdruck. 800 oder 900 + 8	2	7	Luft-Temperatur. Min.	8	2	7	Absolute Feuchtigkeit. 8	2	7	Relative Feuchtigk. 8	2	7	Richtung und Stärke des Windes. 8	2	7	Bewölkung. 8	2	7	Niederschl.	Bemerkungen.
1	34.1	35.1	34.1	3.0	9.4	11.9	9.5	5.2	5.1	4.9	59	49	55	SSE	1 S	1 S 2	9	8	10	0.0	
2	35.6	36.4	36.6	**1.2**	8.4	11.6	10.0	5.2	4.9	4.6	63	48	50		0 S	2 0	7	8	9		
3	37.9	36.4	38.4	1.5	8.0	10.8	10.8	4.8	4.6	4.9	60	47	51	W	1 N	2 WSW 2	6	9	5		● sch. a, △ p.
4	43.5	44.1	45.5	1.8	7.8	13.0	15.4	4.9	4.2	**3.6**	61	38	27		0 SSW	2 0	5	2	2	0.0	
5	47.1	45.4	45.4	3.0	9.3	19.5	16.3	5.6	7.9	7.7	64	47	56		0 S	2 W 2	6	10	9		
6	46.7	44.9	42.5	7.5	13.4	20.8	18.6	9.0	7.1	6.5	78	39	41	WNW	1 SSW	2 S 2	10	5	7		
7	47.2	48.6	49.0	7.3	12.4	16.4	18.3	6.9	6.2	5.3	64	44	34	S	2 W	2 W 2	7	10	5		
8	52.1	51.5	52.9	4.8	11.5	21.4	18.4	6.5	6.9	5.2	64	36	33		0 W	2 0	10	6	9		
9	**53.7**	53.0	52.2	8.0	15.9	22.8	21.8	8.1	8.7	9.1	60	42	47		0 W	1 0	6	7	3		
10	51.5	49.3	49.6	10.0	18.4	**24.0**	22.1	**10.5**	9.5	8.4	66	43	43		0 S	2 S 1	0	1	1		
11	45.8	43.7	41.5	4.0	15.1	15.8	10.5	7.8	6.6	5.6	61	50	59		0 NW	3 S 2	9	10	10		
12	37.7	35.8	35.3	4.0	8.2	11.5	9.5	6.3	5.3	5.3	78	53	60	S	2 W	2 WNW 3	9	8	7	0.5	● n.
13	29.2	24.2	19.7	3.0	7.4	9.5	10.0	6.8	7.4	6.5	89	86	70		0 S	2 SW 1	10	10●	10		● a, p.
14	21.8	24.2	28.7	3.0	4.8	5.8	5.0	5.9	5.4	5.1	92	79	79	NW	5 NNW	6 NW 4	10●	7	8	3.6	● n, a, p.
15	32.4	30.1	28.6	1.5	6.6	10.8	11.5	4.7	6.3	7.6	66	66	75	NW	1 NNW	1 S 2	8	10	9	0.1	● n, a.
16	25.2	21.7	**18.4**	4.8	8.0	10.4	8.7	7.1	7.1	6.0	89	75	72		0 S	3 WSW 2	10	10	10	0.0	● a, p.
17	21.2	21.0	19.5	2.0	3.4	5.2	4.7	6.9	4.6	4.8	78	69	75	N	6 NNW	5 W 2	9✱	10	9	0.8	●, ● ✱ u. ✱ n, a.
18	22.0	25.4	29.2	1.8	4.4	9.4	9.1	5.6	7.3	7.0	90	84	82	WNW	2 WNW	2 NW 3	10	9	9	0.0	● a.
19	33.8	32.8	32.5	3.0	10.0	13.6	13.1	6.5	5.7	5.5	70	49	49	NW	2 NW	2 NNW 3	8	1	8	1.3	
20	29.3	28.0	26.3	4.2	9.7	12.7	9.7	5.6	6.9	8.4	63	63	94	NW	1	0 0	8	10	10●		● a, p.
21	28.8	31.6	33.7	8.0	10.7	15.2	13.3	6.6	6.0	5.4	70	47	47	NNW	4 NW	2 NNW 2	9	8	10	2.5	● n, a.
22	37.6	38.4	40.6	6.0	13.5	15.6	12.7	6.6	5.9	9.0	57	45	84		0 SSE	2 0	8	8	9	0.0	● p.
23	43.5	41.0	41.0	8.0	11.8	18.9	15.2	7.7	7.1	7.1	75	44	55		0 S	2 0	9	8	8	0.4	
24	42.0	38.2	37.9	5.0	9.7	16.3	14.6	7.7	4.8	5.1	86	35	41	SSW	2 W	2 NNW 6	10	0	0		
25	35.1	31.7	30.6	2.6	9.8	11.8	9.5	5.5	5.1	4.3	61	49	48	NW	3 NNW	5 NNW 4	4	8	8		
26	30.7	30.0	32.6	1.4	8.2	13.7	12.1	4.9	5.1	5.0	61	43	47	W	2 W	2 N 5	5	5	2		
27	36.1	36.4	37.9	4.2	9.4	14.4	15.6	6.8	5.9	5.5	78	49	42		0 SSW	2 N 2	10	5	1		
28	40.5	38.7	39.7	2.9	10.6	19.2	19.7	6.8	5.2	5.4	72	31	32		0 WNW	2 NW 3	4	2	1		
29	43.2	42.2	42.4	5.3	10.2	19.7	22.4	7.8	5.7	**3.6**	84	34	18		0 WNW	1 W 2	1	2	9		
30	44.8	44.2	45.6	5.6	16.4	22.5	19.4	9.1	7.0	8.1	66	35	49	NNW	2 S	2 0	0	5	7		● p.
M.	37.7	36.8	36.9	4.3	10.1	14.8	13.6	6.6	6.2	6.0	71	51	54		1.2	2.2 1.9	7.2	6.7	6.8	9.2	

$H = 642$ m, $H_b = 644.0$ m
$C_g = 1.25$ mb bei 961 mb

$\varphi = 62^0\ 5'$ N
$\lambda = 9^0\ 7'$ E

Juli.

Datum.	Luftdruck. 800 oder 900 + 8	2	7	Luft-Temperatur. Min.	8	2	7	Absolute Feuchtigkeit. 8	2	7	Relative Feuchtigk. 8	2	7	Richtung und Stärke des Windes. 8	2	7	Bewölkung. 8	2	7	Niederschl.	Bemerkungen.
1	46.2	46.2	46.3	8.3	16.2	23.1	22.0	9.6	6.0	5.7	70	29	29	0 S 4		W 2	0	3	9	0.0	
2	48.0	45.8	44.7	11.8	19.3	23.5	24.2	10.8	7.9	5.8	64	36	26	S 2	NNW 2	E 5	4	5	2		
3	45.0	43.0	41.7	10.0	18.2	21.8	20.0	8.1	6.4	7.0	53	33	41	S 1	S 4	S 2	0	0	8		
4	41.6	40.5	39.1	14.0	15.4	15.1	15.2	11.3	11.7	12.3	87	91	95	SSE 3	S 6	S 2	10•	10•	10•	0.5	● n, a, p.
5	39.2	37.2	36.4	7.5	15.3	22.5	24.5	11.3	8.8	7.3	87	44	32	SSE 2	S 2	S 2	1	5	5	5.3	● n.
6	35.1	33.4	33.2	8.0	15.5	16.4	15.2	10.7	**12.7**	12.4	82	92	97	WSW 2	WSW 2	0	10	10•	10		● a, p.
7	34.7	33.4	33.8	11.0	15.2	20.4	15.4	10.9	10.3	12.0	85	57	92	0	S 3	0	9	10	9	12.7	● n, p.
8	31.0	33.4	34.7	10.0	16.8	13.4	10.0	11.2	9.5	8.3	78	84	91	S 4	SSW 2	0	7	10•	10•	3.0	● n, a, p.
9	34.8	34.1	33.0	7.0	7.6	12.0	11.2	7.4	6.9	6.5	95	66	66	0	0	NNW 2	10	10	7	19.1	● n, a.
10	31.1	30.7	32.2	**5.4**	9.5	11.2	8.6	6.8	6.1	5.8	76	61	69	WSW 2	W 2	NW 1	9	10	10	0.6	
11	35.3	37.6	40.1	5.8	9.7	13.5	12.1	6.9	6.8	6.1	76	59	59	W 2	SSW 2	W 3	9	9	5		● p.
12	44.3	44.6	46.0	5.5	9.2	17.9	16.9	6.5	8.6	7.9	75	57	55	0	SSW 2	0	10	8	9	0.0	
13	49.0	48.5	47.9	9.0	15.3	19.6	19.8	7.3	4.7	**4.5**	57	28	26	W 2	WNW 3	0	1	0	5		
14	47.9	45.8	45.2	6.8	13.4	19.8	21.4	8.6	8.2	8.4	75	48	44	0	S 2	S 5	9	6	8		
15	45.0	42.5	43.6	8.6	17.9	21.4	15.7	11.4	8.5	10.5	75	45	79	S 2	S 4	S 2	9	8	10•		● p.
16	42.8	41.1	40.1	9.2	15.2	19.8	19.4	9.7	8.5	7.8	75	50	47	SW 2	WNW 2	S 1	10	6	10	1.6	● n.
17	39.0	37.3	37.3	9.8	17.7	22.4	21.4	9.9	8.6	8.5	66	43	45	S 4	S 2	S 3	0	8	8		
18	38.4	38.6	39.0	11.7	17.7	21.2	19.8	8.3	9.8	10.3	56	53	60	SSE 6	S 4	S 2	9	10	7		● p.
19	41.9	41.6	42.7	10.7	16.8	25.4	20.0	11.6	10.3	**12.7**	81	44	73	0	S 3	S 2	2	7	7	0.0	● p.
20	46.9	46.7	47.9	10.0	17.5	25.2	22.0	12.0	11.1	11.2	81	47	57	0	S 2	0	0	7	8	0.4	● p.
21	**50.4**	49.1	49.0	13.0	19.0	24.1	22.1	12.4	10.7	9.7	76	48	49	0	SSW 3	S 2	3	8	9	0.6	
22	50.1	48.6	48.2	11.3	18.4	**26.9**	24.2	12.2	9.4	9.6	78	36	43	W 2	WNW 2	0	0	7	6		
23	45.4	45.3	44.7	13.4	20.7	25.1	20.2	11.4	7.4	9.0	63	32	51	0	SW 4	0	7	6	9		
24	43.9	43.3	43.3	14.0	17.4	22.8	21.6	12.0	11.1	11.2	81	54	59	S 2	S 2	0	8	8	3		● p.
25	42.0	39.7	38.1	9.0	16.4	24.6	23.2	11.3	11.2	8.3	81	49	39	S 1	S 4	S 6	6	5	2	0.0	
26	38.4	35.2	35.0	13.2	19.0	23.1	16.5	11.7	9.5	12.4	72	45	89	S 1	S 7	0	6	5	9		● p.
27	30.9	29.8	28.8	13.0	15.2	21.9	18.0	11.7	11.7	11.2	91	60	73	S 2	S 7	S 4	10	9	10	1.9	● n, a, p.
28	26.4	26.4	25.6	13.2	15.3	17.2	17.6	12.1	11.4	9.4	93	78	63	S 2	0	S 6	10•	9	10	5.0	● n, a.
29	27.0	25.8	24.9	8.8	12.6	17.4	14.0	8.8	7.2	7.5	82	49	63	S 3	S 6	S 2	10	8	6	0.5	
30	25.1	24.9	24.9	8.0	10.2	13.0	13.0	9.0	9.2	8.3	97	84	75	0	0	S 4	10•	10	7	1.2	● n, a, p.
31	24.6	24.3	**23.1**	7.0	12.2	13.0	14.5	8.6	9.0	8.2	82	81	67	0	S 1	WNW 2	10	7•	9•	4.1	● a, p.
M.	39.4	38.5	38.4	9.8	15.3	19.8	18.1	10.0	9.0	8.9	77	54	60	1.5	2.9	1.9	6.4	7.2	7.6	56.5	

August.

Datum.	8	2	7	Min.	8	2	7	8	2	7	8	2	7	8	2	7	8	2	7	Niederschl.	Bemerkungen.
1	**23.1**	23.3	24.1	8.6	10.8	14.2	12.8	9.2	9.4	9.8	96	78	90	S 1	S 2	0	10•	10•	9	7.2	● n, a, p.
2	23.6	23.6	24.6	8.7	12.4	16.2	12.5	9.2	8.7	9.6	87	63	90	0	W 2	0	8	8	9	8.0	● n, a, p.
3	28.0	28.3	29.7	9.5	12.0	15.9	14.7	9.4	7.7	10.0	91	57	81	0	W 2	0	9•	9	8	13.5	● n, p.
4	29.8	30.1	29.1	10.2	12.1	14.5	14.2	9.3	7.5	8.6	89	61	72	NW 1	NW 1	0	10	10	9	2.7	● n, p.
5	28.5	27.5	28.0	7.9	11.4	12.5	13.7	9.1	8.8	9.0	90	82	78	0	0	0	8	10•	9	2.6	● n, a, p.
6	30.0	30.7	32.1	8.2	11.8	16.7	14.8	9.2	8.1	**10.9**	90	57	87	0	0	0	10	10	9	1.7	● p.
7	35.3	35.3	37.9	7.2	12.7	**19.4**	16.7	9.9	7.8	7.5	91	47	53	0	W 2	NW 3	2	3	8	4.1	● n.
8	39.5	38.6	38.8	8.4	13.2	**19.4**	16.9	9.7	9.0	8.5	87	54	60	WSW 2	S 2	S 6	1	9	10		
9	39.6	39.2	36.4	9.7	12.0	18.2	16.8	9.6	7.3	7.7	93	48	54	0	S 2	S 2	9	6	10	5.7	● n.
10	34.4	32.3	30.9	11.7	13.8	17.4	16.8	9.9	10.3	7.5	85	69	53	S 6	S 3	S 2	10	6	7	0.5	● n.
11	29.2	28.6	30.5	7.2	9.8	17.4	12.7	8.1	7.0	7.6	90	48	70	S 2	S 2	0	10	10	10		● p.
12	38.3	39.2	39.1	7.0	11.3	16.0	13.5	7.2	5.8	6.8	72	43	59	SW 1	W 2	S 2	3	1	10	0.0	● p.
13	38.9	38.8	37.5	10.0	11.6	13.4	13.6	8.3	9.7	9.7	82	86	84	S 5	S 6	S 6	10	10	10•	0.2	● n, a, p.
14	37.0	38.7	39.8	9.2	10.8	13.0	9.4	8.2	**4.8**	6.6	85	43	75	0	W 5	S 2	6	4	9•	0.3	● p.
15	40.7	40.6	40.8	6.0	7.4	9.8	8.0	6.5	5.7	5.4	84	63	66	S 1	S 1	W 1	9	9	4	0.0	● a, p.
16	39.6	38.1	35.7	3.6	7.4	12.2	10.8	6.2	5.3	5.4	81	50	56	W 2	WNW 1	WSW 2	3	7	10	1.0	
17	32.4	32.3	32.5	5.9	9.4	11.0	9.8	7.9	5.4	6.5	89	55	72	W 1	W 2	NNW 2	7	9	8	1.0	● n.
18	29.3	29.9	30.2	8.1	10.2	12.0	10.2	7.0	7.0	7.6	76	67	82	NNW 3	NNW 4	NNW 4	10	10	9	0.0	● n.
19	32.7	32.5	32.9	8.3	11.4	15.5	14.0	8.4	7.3	8.0	84	56	67	W 1	NNW 2	0	9	9	10	1.1	● n,
20	32.9	32.2	31.9	8.4	10.5	16.7	12.8	8.6	8.1	10.4	92	57	95	0	0	0	10	10	10•	0.0	● n. p.
21	31.6	32.0	33.0	10.0	11.8	14.8	13.2	9.7	9.5	10.0	95	76	89	0	0	S 2	10	10•	5	7.6	● n, a, p.
22	37.1	38.2	38.7	10.9	13.2	14.8	12.8	8.8	9.0	9.3	79	72	86	S 4	S 4	S 2	8	9	9	5.9	● a, p.
23	41.2	41.6	42.1	10.2	12.0	16.0	15.2	9.4	9.7	9.0	92	72	70	S 1	S 4	S 5	10•	9	6	2.9	● n.
24	41.4	40.5	39.8	10.2	12.6	15.2	12.8	8.6	7.8	7.2	79	60	66	S 5	S 6	S 5	10	9	9		
25	39.3	39.5	40.2	9.9	13.1	14.8	12.8	9.0	6.6	7.6	81	53	69	S 4	S 5	S 1	9	5	9		● a.
26	**42.5**	42.0	40.7	12.2	12.4	15.6	12.8	8.1	7.5	6.2	76	57	56	S 5	S 4	S 3	6	7	7	0.0	
27	40.3	39.2	38.2	7.5	11.2	14.2	11.2	6.9	6.4	6.9	70	53	69	S 4	S 4	S 3	10	9	10		
28	34.5	36.0	36.7	8.3	9.8	12.6	11.0	7.9	9.1	8.0	87	85	82	S 6	S 4	S 2	10•	10•	8	0.1	● n, a, p.
29	27.5	25.0	23.2	8.6	9.3	13.1	10.7	6.1	5.8	5.3	70	51	55	SSE 7	S 2	S 7	10	5	8	2.3	● a.
30	28.1	30.6	33.5	5.2	7.2	9.5	7.6	6.5	6.1	5.7	86	69	73	WSW 2	WNW 2	NNW 4	9	9	8•	0.5	● n, p,
31	31.7	26.0	24.2	**3.2**	5.4	8.5	8.8	5.9	6.7	5.0	87	81	59	WSW 2	S 3	WNW 4	10•	8	4	0.2	● a.
M.	34.1	33.9	34.0	8.4	11.0	14.5	12.7	8.3	7.6	7.8	85	62	72	2.1	2.5	2.3	8.3	8.1	8.4	69.1	

$H = 642$ m, $H_b = 644.0$ m
$C_g = 1.25$ mb bei 961 mb

$\varphi = 62^0\ 5'$ N
$\lambda = 9^0\ 7'$ E

September.

Datum.	Luftdruck. 800 oder 900 + 8	2	7	Luft-Temperatur. Min.	8	2	7	Absolute Feuchtigkeit. 8	2	7	Relative Feuchtigk. 8	2	7	Richtung und Stärke des Windes. 8	2	7	Bewölkung. 8	2	7	Niederschl.	Bemerkungen.
1	17.2	15.9	15.1	4.1	6.2	10.4	6.9	4.9	5.1	4.7	70	54	64	S 6	SW 1	WSW 2	7	8	9	2.1	
2	11.1	11.4	13.9	3.4	5.4	7.8	3.9	5.7	6.7	6.1	85	84	00	SW 2	W 2	WNW 1	10•	9•	10•	0.5	● n, a, p.
3	15.0	15.8	15.6	2.1	4.4	8.8	6.8	5.6	5.4	5.9	90	64	79	0	NW 2	WSW 2	8	10	8	10.0	● n, a.
4	13.5	12.8	12.7	4.4	5.6	7.7	5.4	5.2	4.6	6.2	76	59	92	SSW 2	WSW 2	ESE 1	9	10	10•	0.0	● p.
5	15.5	18.1	20.2	3.2	4.4	8.8	7.0	6.1	6.2	5.6	98	73	76	0	0	0	10	9	9	4.0	● n, a.
6	20.6	21.0	22.2	4.4	5.3	7.3	7.2	6.5	6.5	6.8	97	86	90	0	0	0	10•	10	9	1.9	● n, a, p.
7	24.7	27.2	27.8	5.2	5.7	8.7	7.7	6.5	7.5	6.9	96	89	89	0	0	0	10•	7	10	5.4	● n, a, p.
8	29.6	28.9	29.9	4.2	6.3	12.0	7.4	6.7	6.2	6.9	95	60	90	0	SSW 2	0	9	5	9	11.5	● n, p.
9	31.7	32.1	32.0	3.8	4.4	12.6	8.4	5.8	5.9	6.0	93	55	72	0	S 1	S 2	3	9	5	0.6	
10	34.1	34.7	35.3	2.4	4.7	11.1	6.8	5.9	6.3	5.4	93	63	73	0	0	0	10	9	10		
11	38.2	38.8	39.3	2.7	4.5	9.1	5.9	6.1	6.3	6.4	97	73	93	0	S 1	0	10	10•	1		● a, p.
12	42.6	42.5	42.8	-1.4	1.1	12.8	7.2	4.8	5.5	5.0	96	50	67	0	WSW 2	0	0	6	1	2.4	
13	45.3	45.0	44.9	0.5	2.8	10.8	7.1	5.2	4.7	4.6	93	48	61	0	SSW 2	0	9	2	1		
14	43.8	41.8	42.8	-0.6	3.0	11.6	6.4	5.1	5.6	7.0	90	55	97	0	0	0	5	10	10		● p.
15	44.8	**45.8**	45.1	3.0	5.8	13.6	10.2	6.7	5.5	6.1	97	47	66	0	W 1	0	10	8	8	2.8	
16	43.6	41.5	40.6	5.3	7.7	**15.7**	11.6	7.4	7.2	7.2	94	55	72	0	0	0	9	9	10		
17	40.1	39.7	39.5	5.4	8.6	14.7	9.9	7.5	7.2	6.3	91	57	69	0	S 4	0	10	9	6		
18	37.7	36.7	35.0	7.4	8.9	10.7	8.8	7.1	7.3	6.6	85	76	79	S 4	S 4	S 3	6	7	10•		● a, p.
19	34.0	34.0	33.9	6.1	7.3	10.4	7.6	6.9	6.8	6.6	90	73	85	S 2	S 2	S 4	10	8	7	0.9	● n.
20	25.8	20.4	20.5	6.8	6.8	7.9	8.3	7.1	7.5	6.6	96	94	81	SSW 8	SSE 8	S 7	10•	10•	10	2.2	● n, a, p.
21	23.2	19.4	14.0	3.9	3.9	8.2	7.8	6.1	**7.9**	7.6	99	97	95	S 6	S 3	S 3	10•	10•	10•	12.9	● n, a, p.
22	14.6	18.1	21.2	4.1	6.4	9.5	6.2	5.3	5.1	4.0	73	57	57	SSE 5	S 4	0	7	9	9	22.2	● n.
23	16.0	11.5	**08.8**	3.4	5.4	7.8	8.5	6.2	7.2	7.7	92	92	93	SE 3	S 3	S 6	10•	10	9•	1.4	● n, a, p.
24	19.1	22.6	25.4	5.4	7.2	12.5	8.4	6.5	5.9	5.2	86	55	64	S 3	SSE 3	S 4	9	7	10	9.1	● n.
25	31.1	31.4	31.9	-0.5	3.0	9.8	6.4	5.5	5.8	5.0	96	64	69	0	SSE 2	0	2	8	8		
26	32.9	32.2	32.6	-1.2	0.6	8.2	3.7	4.7	5.6	4.9	98	69	81	0	0	0	0	3	1		
27	35.8	36.9	39.2	-0.7	0.7	8.2	5.0	4.9	4.7	5.7	99	59	87	0	S 2	S 2	5	8	8		
28	43.1	41.7	38.5	0.3	3.0	9.1	7.2	5.6	5.1	4.2	99	60	55	0	S 3	S 3	7•	7	9	1.0	● n.
29	31.7	32.8	35.6	3.0	7.0	11.6	5.5	5.9	6.2	4.3	78	61	64	S 4	S 2	0	10	10	2	0.6	● n.
30	44.5	44.2	43.4	0.1	1.8	7.6	6.3	4.5	4.2	**3.9**	85	54	55	0	S 1	S 3	10	3	10		
M.	30.0	29.8	30.0	3.0	4.9	10.2	7.2	5.9	6.1	5.8	91	66	77	1.5	1.9	1.4	7.8	8.0	7.6	91.5	

Oktober.

Datum.	Luftdruck. 8	2	7	Luft-Temperatur. Min.	8	2	7	Absolute Feuchtigkeit. 8	2	7	Relative Feuchtigk. 8	2	7	Richtung und Stärke des Windes. 8	2	7	Bewölkung. 8	2	7	Niederschl.	Bemerkungen.
1	37.1	41.2	42.5	1.3	8.3	7.2	6.5	5.6	6.1	4.8	69	81	67	S 4	S 3	0	9	5	10		● a.
2	32.9	38.7	38.9	5.2	6.9	8.8	5.7	**6.6**	6.0	4.3	89	70	63	0	S 2	W 2	10•	8	8	7.0	● n, a.
3	28.8	27.9	31.0	1.2	1.4	4.0	-0.5	5.0	5.1	3.6	97	84	79	0	W 2	W 3	10	2	10	15.3	✱ n, p.
4	36.4	38.3	33.6	-1.8	-1.1	3.0	2.7	3.9	3.9	3.6	93	67	64	0	W 2	W 3	9	6	10	0.3	✱ n.
5	37.6	41.5	42.9	-1.6	-1.1	1.3	0.5	3.7	3.3	3.4	87	63	72	0	W 2	S 1	9*	8	9	0.5	✱ n, p.
6	30.4	24.8	22.9	-1.5	0.4	**9.7**	6.3	3.4	5.1	4.7	72	57	66	S 2	WSW 3	NNW 3	9	4	6	0.0	
7	32.4	36.1	39.7	-0.5	-0.3	2.0	0.0	4.4	4.4	4.2	96	82	91	0	W 2	ENE 4	8	6	10*	1.8	✱ n, a, p.
8	43.7	43.9	42.1	-2.1	-0.6	3.4	1.4	3.6	3.1	3.1	79	53	61	0	SSW 2	0	9	8	10	0.5	✱ n.
9	32.5	33.0	32.4	-0.6	7.1	9.0	7.2	4.6	4.8	5.0	61	56	67	NW 2	W 3	0	5	3	10		
10	32.1	35.3	35.5	-0.8	-0.6	-0.7	-3.0	3.9	3.1	3.1	89	73	84	NE 2	W 2	NE 2	7*	10*	10*	1.0	✱ n, a, p.
11	34.0	31.9	29.7	-7.1	-4.1	-0.6	-2.7	3.0	2.8	3.0	87	64	79	0	SSW 2	0	9*	10	9	1.2	✱ n.
12	27.2	25.9	25.6	-8.7	-6.4	-0.6	-2.6	2.6	3.3	3.3	93	73	86	0	0	0	10	8	6		✱ a, p.
13	19.9	18.6	20.1	-6.4	-6.1	-1.7	-6.6	2.9	2.7	2.2	98	67	76	0	0	0	6	7	8	1.7	✱ n.
14	24.5	25.9	28.6	-9.8	-8.3	-2.7	-9.2	1.9	2.1	1.6	78	56	70	0	NW 3	0	7	8	3		
15	28.3	25.5	28.8	-12.8	-10.6	-0.8	-6.0	1.7	3.2	2.2	82	73	75	0	S 2	0	7	8	5		✱ p.
16	27.6	28.0	29.5	-11.1	-5.2	-0.8	-2.8	3.1	3.2	3.4	97	73	91	0	SSW 2	0	10	6	8*	1.5	✱ n, p.
17	30.4	30.1	29.9	-8.9	-8.7	-2.0	-8.5	2.4	2.6	2.0	98	64	78	0	0	N 2	1	1	0	1.0	✱ n.
18	31.4	33.2	34.9	-10.2	-9.0	-4.6	-9.8	2.0	2.1	1.8	87	66	82	0	0	NE 2	6	2	0		
19	36.3	37.0	38.1	**-15.0**	-13.7	-3.8	-3.4	**1.3**	2.3	2.6	78	64	72	0	0	0	4	1	2		
20	36.6	35.5	35.1	-13.9	-8.5	-0.2	-5.4	2.2	2.5	2.2	89	55	70	0	W 2	0	7	1	0		
21	31.3	29.2	30.1	-12.2	-11.5	-3.0	-1.2	1.8	2.6	3.1	92	69	72	0	0	S 7	2	3	10		
22	24.0	23.1	21.2	-11.7	-3.2	0.1	-1.0	3.0	3.5	3.7	84	75	86	SSW 8	S 7	S 7	10	9	7		
23	19.4	16.8	14.2	-3.2	-0.7	1.2	2.0	4.0	4.4	4.9	90	87	93	E 2	S 6	E 5	10	10*	10		✱ a, p.
24	**13.6**	13.7	14.7	-0.7	3.4	4.5	4.4	5.5	5.7	5.9	96	91	96	S 2	S 5	0	9	7	10•	2.3	● n, p.
25	15.5	19.0	21.0	3.0	4.9	6.6	5.4	6.1	6.1	6.1	96	84	91	S 4	S 5	S 2	10	5	5	3.1	● n.
26	24.4	26.6	26.9	3.2	4.2	6.1	3.8	5.3	5.8	5.2	86	82	87	S 2	S 2	0	10	8	3		● a.
27	23.9	24.2	22.9	3.1	5.3	4.6	5.2	6.0	5.8	6.3	91	93	95	S 5	S 2	0	10•	10•	10•	0.6	● n, a, p.
28	18.5	19.0	22.9	4.2	4.2	6.2	4.2	5.8	5.9	5.2	93	84	85	0	SSE 2	S 1	10•	7	7	1.2	● n, a.
29	29.3	30.3	29.4	1.9	1.9	4.1	1.9	5.1	4.8	4.9	79	79	92	0	S 1	0	4	7	10•	0.2	● p.
30	35.2	37.2	38.3	-2.0	2.0	0.6	-0.2	5.3	4.7	4.5	00	98	99	0	0	0	6	10	2	0.1	● n.
31	42.1	44.6	**47.1**	-1.7	0.7	2.2	0.8	4.7	4.8	4.2	96	89	86	0	S 3	S 4	10	10	10	0.5	● n, ✱ p.
M.	29.6	30.2	30.7	-3.9	-1.6	2.0	-0.2	3.9	4.1	3.8	88	73	80	1.1	2.2	1.5	7.8	6.4	7.0	39.8	

$H = 642$ m, $H_b = 644.0$ m
$C_g = 1.25$ mb bei 961 mb

$\varphi = 62^0\ 5'$ N
$\lambda = 9^0\ 7'$ E

November.

Datum.	Luftdruck. 800 oder 900 + 8	2	7	Luft-Temperatur. Min.	8	2	7	Absolute Feuchtigkeit. 8	2	7	Relative Feuchtigk. 8	2	7	Richtung und Stärke des Windes. 8	2	7	Bewölkung. 8	2	7	Niederschl.	Bemerkungen.
1	47.9	48.2	48.3	-2.4	-2.2	-2.3	-3.6	3.6	3.4	3.3	92	87	91	S 4	S 7	S 7	10	10*	10*	0.7	* n, a, p.
2	45.9	44.0	42.5	-4.4	-4.3	-3.0	-3.2	3.1	3.2	3.0	92	87	84	S 5	S 5	S 6	10*	10*	8	2.3	* n, a, p.
3	35.4	32.4	29.6	-4.3	-2.6	-0.9	-2.0	3.3	3.3	3.4	86	75	84	S 5	S 4	0	10	10	10	0.7	
4	22.0	21.6	23.6	-4.3	-4.0	-1.2	-1.4	3.2	3.8	3.6	95	89	84	0	W 1	0	10	10*	0		* a, p.
5	24.2	22.2	20.7	-5.9	-3.4	-1.7	-2.6	2.7	2.8	3.1	75	70	81	0	0	0	10	10	10*	0.0	● p.
6	16.7	20.4	21.9	-6.8	-4.8	-3.2	-7.4	3.1	2.3	1.9	96	63	70	0	0	0	10*	6	2	3.4	* n, a.
7	24.3	23.2	23.1	-13.8	-12.0	-10.8	-14.0	1.5	1.4	1.3	81	70	79	0	0	0	1	1	2	0.0	
8	23.5	23.3	23.1	-15.0	-11.8	-9.3	-10.5	1.6	1.7	1.6	82	76	78	0	0	0	10	10	10		
9	23.9	25.2	26.5	-19.8	-19.8	-11.9	-12.6	**0.9**	1.5	1.6	90	81	87	N 1	0	S 2	2	6*	6		* a, p.
10	33.3	34.5	36.8	**-20.4**	-18.4	-14.8	-15.9	1.0	1.2	1.2	89	81	85	0	0	0	0	0	1	0.6	
11	42.0	45.5	47.7	-18.5	-13.7	-7.2	-7.4	1.4	2.1	2.4	85	78	89	0	0	0	6	8	6		* sch. a.
12	48.3	47.1	46.6	-13.7	-7.4	-3.3	-4.6	2.4	3.2	3.0	89	86	91	0	0	0	8	9	5	0.0	* a.
13	46.1	44.5	41.8	-7.6	-4.5	-1.7	-5.0	2.8	2.4	2.6	84	67	81	0	0	0	8	10	0	0.0	
14	39.5	38.7	39.1	-10.5	-10.5	-8.8	-10.8	2.1	2.3	2.0	99	96	97	0	0	0	10	10	10		
15	42.1	42.3	41.9	-12.8	-12.6	-8.6	-13.8	1.7	2.3	1.5	97	94	93	0	0	0	10	2	0		
16	41.3	40.1	42.4	-14.6	-11.4	-9.8	-9.1	1.8	2.0	2.2	93	91	92	0	0	0	9	10*	4		* a.
17	49.7	52.9	**54.2**	-12.8	-2.2	-0.8	-4.4	3.5	3.5	3.1	89	81	93	0	0	0	8	8	0	0.0	
18	52.8	52.0	51.6	-8.2	-7.0	-6.8	1.4	2.7	2.3	3.6	97	82	69	S 1	0	E 1	3	1	2		
19	43.9	39.1	38.2	-7.8	2.7	1.9	**4.0**	3.8	3.4	**5.5**	67	64	89	0	NW 6	E 2	8	10●	10●		● p.
20	36.9	38.6	39.2	0.5	0.7	0.8	-0.3	4.7	4.5	3.7	95	92	84	S 1	0	ESE 2	10*	5	5	26.0	* n.
21	33.9	34.2	34.5	-1.3	-1.0	-1.2	-1.5	4.2	3.6	3.4	97	86	82	0	E 2	0	10*	8	10	2.8	* n, a.
22	29.6	25.1	19.0	-4.0	-3.0	-0.8	0.4	3.4	3.9	3.9	94	89	81	0	S 4	0	10*	10	10	6.8	* n, a, p.
23	29.5	29.1	28.9	-6.8	-5.1	-3.3	-4.6	2.7	3.1	3.1	86	84	95	ENE 2	0	0	10*	10*	9*	1.3	* n, a. p.
24	23.6	23.5	22.4	-9.7	-9.4	-6.4	-8.7	1.8	2.6	2.2	79	91	91	0	E 2	0	8	10*	7	5.0	* n, a, p.
25	24.4	27.4	30.0	-10.8	-7.7	-7.3	-8.0	2.4	2.2	2.2	91	82	86	0	0	0	10	7	7	2.5	* a, p.
26	31.3	25.2	17.1	-12.5	-12.4	-9.4	-7.6	1.7	2.0	2.4	93	87	90	0	S 2	SSE 7	8	10*	10*	1.4	* n, a, p.
27	15.9	**14.7**	15.2	-14.0	-11.0	-7.9	-7.6	1.8	2.1	2.1	90	81	81	0	0	0	10	10	8	2.6	* n.
28	19.5	26.6	29.7	-12.1	-10.8	-5.0	-7.2	1.9	2.1	1.9	90	63	70	0	S 2	SE 2	10*	10	9	0.2	* n, a.
29	29.8	30.3	28.9	-13.6	-13.4	-15.6	-16.4	1.3	1.1	1.2	79	82	87	S 2	0	0	1	2	7	0.8	
30	29.7	30.7	32.1	-18.5	-18.0	-13.4	-16.3	1.0	1.3	1.1	86	81	78	0	E 1	ENE 2	1	3	7		
M.	33.6	33.4	33.2	-10.2	-8.0	-5.8	-6.7	2.4	2.6	2.6	89	81	85	0.7	1.2	1.0	7.7	7.5	6.2	57.1	

December.

Datum.	Luftdruck. 800 oder 900 + 8	2	7	Luft-Temperatur. Min.	8	2	7	Absolute Feuchtigkeit. 8	2	7	Relative Feuchtigk. 8	2	7	Richtung und Stärke des Windes. 8	2	7	Bewölkung. 8	2	7	Niederschl.	Bemerkungen.
1	30.2	29.7	30.9	-18.8	-18.5	-16.1	-15.8	0.9	1.1	1.2	81	78	84	0	0	0	6	6	6		
2	32.3	34.4	36.5	-18.5	-11.4	-11.2	-13.4	1.6	1.6	1.5	81	81	89	0	0	0	1	3	5		
3	41.3	44.4	45.9	-15.0	-8.5	-7.6	-10.5	2.2	2.3	1.9	91	87	92	0	0	0	10*	10	7	0.0	* n, a.
4	45.9	45.2	45.3	-11.8	-11.6	-0.4	0.2	1.8	3.5	3.8	92	78	82	0	0	0	5	4	4	0.0	
5	**46.0**	42.6	37.8	-11.7	-1.7	-0.2	1.0	2.9	3.2	3.2	72	70	64	0	S 2	S 4	2	10	10		
6	25.0	30.4	34.3	-4.4	-0.4	0.2	-1.2	3.3	3.7	3.0	73	79	72	W 3	W 5	W 5	3	10	6	1.3	* n, a.
7	37.8	37.5	37.0	-10.2	-9.7	-9.7	-9.8	2.1	2.0	2.0	91	89	90	0	0	0	4	4	0	0.1	
8	32.5	31.7	31.3	-14.4	-11.2	-2.4	-2.6	1.9	3.3	3.2	94	85	84	0	S 7	S 6	2	7	8		
9	28.2	25.6	23.8	-11.2	-3.1	-3.6	-4.2	3.0	3.0	2.9	82	84	86	S 4	S 8	S 8	10	10*	10*		* a, p.
10	22.1	19.5	18.5	-4.2	-3.4	-3.3	-3.1	3.0	3.3	3.3	82	89	89	S 2	0	S 3	8*	7*	10*	0.3	* n, a. p.
11	19.3	21.0	21.4	-7.4	-6.8	-7.6	-10.4	2.5	2.2	1.9	89	85	90	0	0	0	10	10	9	0.0	
12	20.8	22.5	22.7	-11.4	-4.8	-6.8	-8.0	2.8	2.1	2.2	85	78	87	0	NNW 2	0	9	5	10*	0.0	* n, a, p.
13	19.6	21.3	25.5	-10.7	-10.4	-11.4	-13.4	2.0	1.8	1.4	93	89	82	0	0	0	4	7	5	1.5	* n, a.
14	35.0	39.0	37.1	-19.4	-18.6	-18.4	-18.5	0.9	1.0	0.9	84	85	79	0	0	0	2	0	0	0.5	* a.
15	39.9	40.4	41.8	-22.3	-19.2	-21.5	-23.9	0.9	0.8	**0.6**	84	84	85	0	0	0	7	0	0	0.0	
16	33.7	34.4	29.2	**-24.0**	-18.2	-16.1	-15.6	1.0	1.1	1.2	87	86	87	0	0	0	10*	9*	10	0.6	* n, a, p.
17	18.8	20.6	20.3	-18.2	-5.8	-8.6	-10.0	2.7	2.3	2.0	89	94	93	0	0	0	10	10*	10*	4.1	* n, a, p.
18	19.1	15.7	16.1	-10.5	-7.7	-8.0	-11.8	2.3	2.4	1.7	87	93	87	0	SW 2	0	10*	10*	2	7.1	* n, a, p,
19	19.7	21.5	21.2	-15.3	-15.3	-14.3	-17.2	1.2	1.1	1.0	85	73	79	0	0	0	1	6	7	1.5	* n.
20	20.6	20.6	20.9	-18.7	-18.0	-19.3	-20.2	1.0	0.9	0.9	87	87	90	0	0	0	2	2	0		
21	17.3	14.5	10.6	-21.5	-17.4	-9.4	-9.4	1.1	1.9	1.8	87	81	79	0	S 2	0	10	10*	10		* a, p.
22	07.6	07.9	10.7	-17.4	-9.1	-10.8	-15.4	2.2	1.9	1.3	92	93	91	0	0	0	10*	9	2	3.0	* n, a.
23	10.8	09.9	09.2	-16.8	-15.8	-14.0	-14.2	1.3	1.5	1.4	91	90	91	0	0	0	10	10*	10	1.0	* a, p.
24	09.7	10.6	10.7	-16.2	-12.3	-13.3	-16.1	1.6	1.4	1.2	89	85	93	0	0	0	10	10	0	1.7	
25	08.7	09.4	11.1	-21.2	-15.6	-21.3	-22.0	1.3	0.8	0.8	91	89	91	0	0	0	1	2	0		
26	12.8	15.4	16.9	-22.5	-19.6	-16.6	-14.5	0.9	1.2	1.4	87	87	92	0	0	0	2	2	0		
27	18.2	15.9	14.2	-20.5	-17.0	-15.8	-16.6	1.1	1.3	1.2	86	90	91	0	0	0	0	3	7		
28	14.2	14.4	14.7	-17.0	-13.8	-12.2	-11.4	1.5	1.6	1.8	92	91	92	0	0	0	7	7	10	1.0	* n.
29	12.6	07.0	01.8	-14.1	-9.5	-3.9	-2.6	2.2	3.3	3.5	94	95	92	0	S 7	S 7	10*	10*	10*	0.0	* n, a, p.
30	**87.6**	88.4	91.4	-9.5	0.0	**2.0**	0.2	**4.2**	4.0	3.4	90	75	72	SE 8	E 1	0	9*	6	10	5.3	* n, a.
31	98.2	03.3	06.9	-5.3	-5.1	-5.6	-7.8	2.8	2.6	2.3	89	84	90	0	0	0	1	7	3	0.0	
M.	22.1	22.4	22.4	-14.8	-11.0	-9.9	-10.9	1.9	2.1	1.9	87	85	86	0.5	1.2	1.1	6.0	6.6	5.8	29.0	

$H = 22$ m, $H_b = 24.9$ m — $\varphi = 59^0\ 55'$ N

$C_g = 1.35$ mb bei 1009 mb — $\lambda = 10^0\ 43'$ E

Januar.

Datum.	Luftdruck 900 oder 1000 + 8	2	7	Luft-Temperatur. Min.	8	2	7	Absolute Feuchtigkeit. 8	2	7	Relative Feuchtigk. 8	2	7	Richtung und Stärke des Windes. 8		2		7		Bewölkung. 8	2	7	Niederschl	Bemerkungen
1	87.7	88.6	89.0	-0.2	0.2	1.9	1.5	4.6	4.9	4.7	98	93	93		0	S	2		0	8	7	5	5.8	● ✱ n, ⊍ p. ◍ abd.
2	**64.5**	66.8	65.8	-0.7	4.9	5.2	4.5	5.4	5.5	5.0	82	83	79	SSW	4	SSW	3	S	5	7	9	10	6.8	◍ n, ● tr. a, ◍ abd.
3	67.9	74.5	77.5	1.5	1.8	2.1	-0.1	4.7	4.4	4.3	89	82	93		0		0		0	2	5	7	6.5	◍ n.
4	84.6	82.7	82.5	-0.2	-0.2	1.3	-1.0	4.2	4.7	4.1	93	92	95		0		0		0	0	10	10≡		≡ p, abd.
5	95.8	96.2	94.4	-4.9	-4.9	-3.4	-2.8	3.2	3.6	3.6	99	00	95		0		0		0	10≡	3	0		≡ n, mg.
6	95.5	99.2	04.3	-5.5	-4.0	1.0	0.5	3.3	3.5	2.4	97	71	51		0	W	1	W	2	2	2	1		⊍ abd.
7	97.3	92.9	94.7	-4.1	-0.2	0.2	**7.8**	3.8	4.2	3.8	83	90	47		0		0	W	4	10	7	0		
8	03.8	04.2	02.1	-0.2	0.2	1.3	3.0	3.9	4.5	4.8	83	89	85		0		0		0	2	8	10		
9	93.5	92.6	03.7	-0.1	2.7	3.1	3.0	5.3	5.4	3.1	94	95	54	S	2		0	E	1	10●	10●	1	0.0	● tr. mg., ◍ a, p.
10	16.6	15.3	10.7	-2.2	-2.2	-0.3	-1.5	3.2	3.6	3.6	82	81	88		0		0		0	0	8	0	3.4	⊍ abd.
11	07.3	11.8	15.4	-2.5	2.1	4.2	5.3	5.0	5.2	4.7	91	84	71	NE	2		0		0	2	9	10		
12	19.0	18.2	18.2	2.1	2.3	1.1	-1.0	4.7	4.6	4.1	82	92	95		0		0		0	6	1	8		
13	17.6	16.9	16.6	-2.1	-2.1	-1.2	0.3	3.9	4.2	4.5	98	99	96	SSE	1		0		0	10	9	0		
14	12.4	07.2	02.9	-2.8	3.4	3.0	5.3	5.7	5.2	**6.3**	98	91	96	S	4	SSW	4	S	3	10●	10●	10●	0.5	◍ mg., ● tr. a, p, abd.
15	03.6	99.8	03.8	2.7	3.7	5.8	3.6	5.3	4.8	3.9	88	70	65	S	3	SW	4	SW	4	2	4	0	0.3	
16	13.8	13.5	14.8	2.7	4.0	5.7	5.1	4.7	5.3	5.0	77	77	77		0	SW	2	SW	2	7	7	0		⊍ mg., ⊍⁰ abd.
17	18.5	20.5	21.7	2.8	2.8	5.3	1.3	4.6	4.8	4.5	80	72	89	SSW	3	ESE	1		0	0	0	0		
18	22.4	21.6	19.1	-1.8	-0.2	2.4	1.4	4.2	5.3	5.0	91	96	98		0		0		0	10	10≡	10≡		≡ a, ≡² p.
19	26.4	36.4	41.4	-0.4	2.0	4.7	0.3	3.4	3.5	3.2	64	55	68		0	WSW	1		0	0	0	0		
20	43.3	41.9	41.0	-6.2	-6.2	-3.8	-5.0	2.4	3.0	2.7	83	87	85		0		0		0	0	0	0		
21	39.0	38.6	38.3	-6.7	-6.4	-3.3	-2.2	2.4	3.3	3.7	83	90	93	ENE	1		0		0	10≡	10	10		≡ mg.
22	36.7	34.8	31.9	-6.4	-1.7	-0.7	-1.0	3.8	4.0	3.7	94	91	86		0		0		0	10	10	10		
23	24.9	22.9	21.9	-2.3	-2.3	-2.5	-2.1	3.2	3.1	3.3	82	79	85	WSW	1	WSW	1		0	10	10	10		✱ fl. a.
24	26.1	28.7	31.4	-2.7	-2.5	-2.4	-3.8	3.1	2.6	3.0	82	69	87		0		0		0	10	1	0	0.0	
25	36.9	40.6	43.1	-5.9	-2.9	1.8	-1.8	3.3	3.5	3.5	88	67	87		0		0		0	2	1	0		
26	**44.0**	42.3	41.1	-6.6	-5.8	-4.1	-5.7	2.7	3.0	2.8	90	86	92		0		0		0	1	1	0		
27	35.0	31.6	28.5	**-10.3**	-9.5	-5.4	-6.0	**2.1**	2.6	2.6	92	85	87		0		0		0	0	0	0		
28	21.6	17.7	15.5	-9.5	-6.0	-4.6	-4.4	2.5	2.7	3.0	84	83	89	ENE	1		0	ENE	2	10	10	10✱		✱ p, abd.
29	11.8	05.2	92.7	-6.1	-4.6	-2.9	0.8	3.1	3.5	4.2	94	93	86		0	ENE	1	SSE	4	10✱	10✱	10●	1.9	✱ n, mg., a, p, ● ✱ abd.
30	82.8	83.9	85.6	-4.8	0.0	2.3	0.2	4.4	4.9	4.2	96	91	90		0	S	1		0	10	2	0	8.0	● ✱ n.
31	75.0	74.6	82.7	-0.3	2.7	5.4	5.8	5.5	5.8	3.4	98	86	50		0		0	WSW	3	10	4	7		
M.	10.5	10.4	10.7	-2.7	-0.9	0.7	0.4	3.9	4.2	3.9	88	84	82		0.7		0.7		1.0	5.8	5.7	4.5	33.2	

Februar.

Datum.	Luftdruck 900 oder 1000 + 8	2	7	Luft-Temperatur. Min.	8	2	7	Absolute Feuchtigkeit. 8	2	7	Relative Feuchtigk. 8	2	7	Richtung und Stärke des Windes. 8		2		7		Bewölkung. 8	2	7	Niederschl	Bemerkungen
1	88.8	93.8	99.4	1.6	2.0	3.8	-0.6	2.6	3.2	2.8	50	53	64	NW	1		0		0	6	2	2		
2	13.1	11.2	05.8	-4.4	-4.4	0.1	-0.6	2.4	3.0	3.1	71	65	70		0		0		0	1	9	1		⊕ a.
3	06.4	05.7	03.2	-4.4	-4.0	4.3	2.6	3.2	4.1	4.7	92	66	84		0	SW	2	SSW	2	0	1	5		⊍ p.
4	00.1	04.4	07.6	-4.3	0.9	4.8	1.6	2.9	3.0	3.3	59	46	63	SW	3	W	3	WSW	3	1	3	0		
5	98.7	90.9	90.6	-0.5	3.7	**6.5**	4.6	5.3	5.8	3.7	88	81	57	SSW	4	S	3	S	4	10	6	0		
6	88.9	88.7	89.9	1.2	1.2	5.5	2.4	3.7	3.2	3.0	73	48	54	S	3	SW	4	SW	3	1	1	1		
7	93.8	97.4	01.2	-2.9	-2.9	3.0	0.1	3.0	3.1	3.0	81	54	65		0	ENE	2		0	2	1	0		
8	01.2	94.9	88.2	-6.8	-6.8	-1.6	1.3	2.3	3.7	4.8	82	90	94		0		0	S	4	2	10	10●		✱ fl. a, ● p, ◍ ✱ abd.
9	**73.0**	76.9	78.2	-6.8	0.3	3.7	2.6	4.6	4.7	4.2	98	78	75		0	SW	4	SSW	3	9	6	2	9.3	◍ ✱ n.
10	90.1	88.2	83.0	-1.7	-0.2	3.4	4.7	3.2	5.1	5.6	71	87	87		0	S	3	SSE	4	1	9	10		
11	83.6	85.4	86.6	-0.6	3.6	4.4	3.1	4.8	4.9	5.2	82	79	91	SSW	2	SSW	2		0	10	9	10		
12	82.3	79.9	84.5	2.1	5.2	5.3	3.8	**6.2**	5.1	4.5	94	76	75	S	5	SSW	6	SSW	4	10	7	8	1.5	● n, mg., a, ● tr. p.
13	94.2	96.8	98.3	1.7	3.2	2.8	3.4	5.1	5.3	5.4	89	94	93	S	2	SSW	3	SSE	2	8	10●	10●	1.3	● a, p, abd.
14	00.4	99.4	99.5	2.6	3.3	3.6	4.1	5.3	5.2	5.6	92	88	92	SE	2	NE	2	E	2	10	10	10	7.2	● n, ● ✱ a.
15	95.3	00.8	04.2	1.1	2.4	5.8	3.2	5.3	5.7	5.5	96	84	95	SSW	4	S	3	S	2	10●	3	10	8.1	◍ n, ◍ tr. mg., a.
16	02.0	99.9	01.2	2.1	3.0	4.1	3.8	4.7	4.8	5.6	83	79	93	ENE	3	ENE	1		0	10	10	10●	0.0	◍ tr. p, ◍ abd.
17	02.2	01.8	01.7	2.8	3.6	3.5	2.8	5.7	5.6	5.5	97	95	98		0		0		0	10	10	10	1.4	◍ tr. mg., a.
18	02.3	03.0	02.7	0.8	0.8	1.8	1.2	4.6	4.5	4.6	94	85	92	NNE	2	ENE	2		0	4	8	9	0.0	
19	05.4	06.6	09.5	-3.9	-3.9	-0.8	-2.6	2.7	2.1	2.4	77	49	63	NNE	3	NNE	3	NNE	3	2	1	2		
20	13.1	12.5	11.6	-7.6	-7.6	-1.2	-3.4	2.0	2.2	2.4	75	52	66		0		0		0	0	3	1		
21	10.6	11.5	12.1	-10.2	-10.2	-2.7	-4.0	**1.8**	2.3	2.6	84	60	77	NE	2		0		0	2	0	0		
22	15.3	16.6	**17.3**	**-10.3**	-7.0	-1.8	-1.2	2.4	3.4	3.7	88	85	88		0		0		0	10	10✱	10✱		✱ fl. 9½-10½ a, von 1 p an, p, ✱ abd,
23	16.3	14.4	13.3	-7.0	-3.5	0.1	-0.1	3.0	3.0	3.3	85	65	73	E	2	ESE	3	ENE	2	10✱	3	9	0.8	✱ n, mg., a.
24	11.0	09.0	07.1	-3.8	-2.2	-0.2	-1.7	2.4	2.9	3.4	62	65	83	NNE	4	ENE	4	ENE	4	10	6✱	10✱	0.0	✱ fl. a, ✱ p, abd.
25	03.4	04.7	04.5	-2.5	-0.2	0.8	0.0	4.0	3.7	3.1	87	76	63	SE	4	ESE	3	NE	2	10✱	10	10	3.4	✱ n, mg., ✱ fl. a, p.
26	02.0	01.7	01.6	-0.3	1.3	1.8	2.4	4.3	4.5	4.1	85	85	75	E	3	SSE	4	E	4	10✱	10✱	10	1.7	✱ n, ✱ fl. mg., ✱ a, ✱ fl. p.
27	01.0	99.8	99.8	-0.5	-0.5	-1.0	-3.6	3.2	3.0	3.0	72	69	85	ENE	3	ENE	4	NE	4	10✱	10✱	10✱	1.0	✱ a, p, abd.
28	00.2	01.2	02.7	-3.6	-2.2	-1.2	-0.8	2.9	3.2	3.4	73	75	78	NE	5	ENE	3	NNE	3	10	10✱	10✱	3.7	✱ n, ✱ fl. a, ✱ p, ✱ fl. abd.
M.	99.8	99.9	0.02	-2.4	-0.8	2.1	1.0	3.7	3.9	4.0	81	72	78		2.0		2.3		3.0	6.4	6.4	6.4	39.4	

H = 22 m, H_b = 24.9 m
C_g = 1.35 mb bei 1009 mb

φ = 59° 55′ N
λ = 10° 43′ E

März.

Datum.	Luftdruck. 900 oder 1000 + 8	2	7	Luft-Temperatur. Min.	8	2	7	Absolute Feuchtigkeit. 8	2	7	Relative Feuchtigk. 8	2	7	Richtung und Stärke des Windes. 8		2		7		Bewölkung. 8	2	7	Niederschl.	Bemerkungen.
1	07.3	09.8	11.6	-2.6	-0.8	0.1	0.6	3.6	4.0	4.1	82	85	84	NE	2	NE	2	NE	2	10✱	10✱	10✱	1.2	✱ fl. n, mg., ✱ a, ✱ fl. p, abd.
2	15.8	18.6	21.2	-0.8	1.0	2.4	-0.3	4.0	3.6	4.0	81	65	89	NE	2	NE	2		0	10✱	9	9	1.2	✱ fl. n, mg., ✱ a.
3	26.3	24.9	24.2	-8.1	-7.4	1.3	-1.2	2.2	2.9	3.4	81	56	81		0		0		0	3	5	8	0.2	⊕ a, p.
4	17.2	12.2	13.1	-7.4	-5.6	3.3	3.2	3.0	4.2	3.4	98	71	58		0		0		0	10≡	2	8		≡ mg.
5	09.2	96.8	84.9	-5.9	-5.0	0.8	1.3	2.6	4.1	4.1	83	85	81		0	SSW	1		0	10≡	2	1		≡ mg., ✱ a.
6	**81.9**	83.6	83.2	-5.5	1.5	9.4	4.2	3.2	3.1	4.5	63	34	73	SW	2	SW	2	NE	2	1	8	9	0.2	
7	83.1	83.2	85.8	-0.5	-0.2	3.4	-0.5	4.0	4.1	2.8	87	70	64	ENE	1		0	ENE	5	8	8	8		✱ sch. p.
8	91.3	91.8	93.7	-6.4	-6.4	-2.4	-4.0	1.7	1.5	1.7	58	39	49		0	NE	2	ENE	2	2	8	8	0.0	
9	98.6	01.7	05.2	-6.8	-6.7	-2.3	-4.6	2.1	2.1	2.1	74	55	63	NNE	2	NE	3	NNE	2	5	2	1	0.0	✱ n.
10	14.6	17.2	19.1	-9.6	-9.6	-2.8	-4.8	1.6	2.4	1.4	71	65	44		0	NE	4	NE	2	1	0	0		
11	21.4	23.9	23.7	-12.0	-10.3	-4.7	-5.9	1.4	1.2	**1.1**	66	37	37	E	2	NE	4	NNE	4	8	4	0		✱ fl. a.
12	22.3	19.8	18.0	-10.4	-5.6	-0.2	-3.2	1.2	1.2	1.5	39	26	40	NNE	5	NNE	5	NNE	4	0	1	1	0.0	
13	17.3	13.8	11.6	-10.0	-8.2	-3.2	-5.7	1.2	1.5	1.3	49	40	43	NNE	2	NNE	3	ENE	2	1	1	1		
14	12.4	12.3	12.6	-11.8	-11.8	-4.0	-5.4	1.2	1.4	1.2	62	40	39		0	SE	2	E	1	1	1	8		
15	19.1	22.4	24.7	**-12.8**	-11.3	-2.3	-3.8	1.3	1.9	1.6	63	48	45		0		0	NE	1	8	0	1		
16	**32.7**	30.5	25.1	-11.5	-8.8	-5.3	-4.8	1.4	2.2	3.0	56	71	93		0	S	3	S	3	10	10✱	10✱		✱ a, p, abd.
17	21.5	22.1	23.3	-9.2	-4.5	3.8	1.6	2.5	4.0	3.1	76	65	59	NNE	2	S	1		0	5	1	7	5.1	✱ n.
18	22.1	19.5	18.3	-4.6	-1.2	6.4	3.6	3.4	4.1	4.3	79	57	72		0		0		0	8	0	1		
19	13.6	11.2	10.4	-1.4	0.8	6.4	6.2	4.1	5.0	4.3	85	70	60		0		0		0	10	8	5		
20	06.3	04.2	03.7	-2.0	0.0	7.0	3.3	3.1	2.5	2.9	67	34	50	SSW	1	W	3	W	1	0	2	3		
21	05.6	05.5	06.7	-4.3	-2.3	5.9	2.4	3.1	2.1	2.6	80	30	47		0	NNE	3	N	1	2	2	1		
22	12.5	12.8	12.7	-3.0	-1.6	4.4	2.4	2.2	3.9	2.8	55	62	51		0	SSW	2	SSW	1	0	3	3		
23	12.9	10.4	09.4	-6.0	-5.0	3.9	1.3	2.4	3.1	4.2	75	51	83		0	SSE	3	S	3	1	2	8		
24	06.1	05.2	05.8	-5.5	0.2	0.8	1.4	4.5	4.7	4.9	96	96	96	SSE	3	SE	1	SSE	3	10✱	10✱	10✱	0.5	✱ n, mg., a, ✱² p, ✱ abd.
25	09.8	12.8	14.4	0.0	0.8	1.6	1.4	4.8	5.1	4.9	98	98	96		0		0		0	10✱	10●✱	10●✱	10.7	✱ n, mg., ● ✱ a, p, abd.
26	17.7	18.2	18.0	0.7	1.7	5.9	3.2	5.0	4.8	4.4	96	69	76		0	SSW	1		0	10●	3	0	7.0	● n, mg., a.
27	18.1	15.2	12.6	-3.8	-3.0	5.8	3.4	3.5	4.4	4.2	95	64	71		0	S	1		0	0	1	5	0.1	
28	07.2	07.9	07.5	-3.3	0.8	2.4	0.4	4.2	2.5	2.1	86	46	45		0	N	4	NW	3	10✱	8	1	0.5	✱ n, mg., a.
29	07.9	07.2	07.3	-5.3	-3.6	4.5	1.4	1.9	2.4	2.6	53	38	51		0	S	1	WSW	1	0	1	2	0.1	
30	05.3	02.6	99.8	-4.2	1.4	7.5	5.3	3.8	5.0	5.0	74	65	74	SSW	4	SSW	3	S	4	8	2	9	0.3	✱ n.
31	94.6	96.8	00.2	1.3	5.1	**10.0**	5.8	**5.4**	3.1	3.4	83	35	50	SW	4	W	3	WSW	1	8	6	2	0.0	● tr. mg., ⊕ a.
M.	10.7	10.1	09.9	-5.6	-3.4	2.2	0.3	2.9	3.2	3.1	74	57	63		1.0		1.9		1.5	5.5	4.2	4.8	27.1	

April.

Datum.	Luftdruck. 900 oder 1000 + 8	2	7	Luft-Temperatur. Min.	8	2	7	Absolute Feuchtigkeit. 8	2	7	Relative Feuchtigk. 8	2	7	Richtung und Stärke des Windes. 8		2		7		Bewölkung. 8	2	7	Niederschl.	Bemerkungen.
1	00.2	95.1	99.4	0.3	0.3	1.0	0.8	4.3	4.2	3.7	92	85	76		0	NW	2	W	2	10✱	10✱	2	0.6	✱ n, mg., ✱² u. ✱ a, p.
2	05.1	02.3	99.3	**-6.1**	-3.2	2.8	3.4	3.0	5.1	5.2	83	91	88		0	S	5	S	4	8	10●	10	3.5	● tr. a, p, abd.
3	97.3	00.5	04.0	-3.4	0.8	4.2	2.7	3.9	2.5	2.3	80	40	41	SW	4	SW	3	WSW	1	1	7	1	0.5	● tr. n.
4	10.6	12.7	14.6	-2.1	0.9	7.4	4.1	2.5	3.0	3.8	50	39	61	S	1	SSE	1	SSE	2	1	8	10		◫ abd.
5	18.2	18.1	18.5	0.0	1.8	7.4	3.8	4.5	4.1	4.2	85	53	70	SW	1	SSE	3	SSW	1	4	2	4		
6	19.3	18.1	18.2	0.9	2.0	11.1	7.5	3.6	4.4	3.0	68	44	39		0	SSW	2		0	1	1	1		
7	20.3	19.9	19.0	-2.0	0.1	13.4	9.6	3.8	4.4	3.4	81	39	38		0	SW	1		0	1	1	1		
8	20.9	19.9	18.5	-1.7	0.7	15.1	10.4	3.6	4.0	4.4	74	31	46		0	SW	2		0	1	1	1		
9	19.1	17.8	17.2	-1.1	1.4	15.2	12.8	4.0	5.0	4.5	78	39	40		0	W	2		0	0	0	0		
10	20.6	21.1	21.1	0.0	3.4	15.5	11.9	4.7	5.6	6.4	80	43	65		0	SW	1		0	0	0	0		
11	**25.0**	23.4	22.1	1.0	4.0	16.7	12.7	5.1	5.5	5.5	84	39	50		0	SW	2	SSW	1	0	1	1		
12	20.9	17.9	15.5	0.9	4.9	**17.7**	12.5	5.2	3.9	5.2	79	26	48		0	SSW	2		0	1	1	1		
13	11.8	08.0	05.7	-0.5	4.1	15.0	11.4	4.9	5.5	6.0	80	44	59	ESE	1	SW	2		0	1	2	7		⊕ a.
14	05.8	05.2	04.7	3.6	6.1	9.2	6.2	5.5	5.8	6.7	78	67	94	ENE	2	E	2		0	10	10	10●		● tr. a. ● p, abd.
15	00.2	96.7	90.8	5.6	6.0	6.9	4.9	6.4	6.3	5.7	91	84	89	SSE	2	S	2	ENE	2	10	9	10●	10.8	● n, ● tr. mg., ● a, p. abd.
16	**86.3**	88.2	89.9	3.6	3.8	8.1	6.0	5.6	6.1	5.2	93	75	75	SSE	2	SSE	3	S	2	10●	8	2	6.7	● n, ● tr. mg., ● sch. a, ● tr. p.
17	93.6	94.9	94.5	-1.0	0.7	11.3	8.5	4.7	4.1	5.5	98	41	66		0	WSW	2	SSE	2	10≡	6	5	2.0	≡ n, mg.
18	98.5	99.7	00.0	0.7	5.2	8.4	7.2	5.6	5.2	5.4	77	63	72	NNE	2	N	1		0	9	9	5	0.0	● tr. mg., ● sch. 3½ u. 7½ p.
19	05.4	06.5	07.9	1.4	4.9	11.6	10.7	3.7	3.3	4.1	56	33	42	S	1	NNE	3	N	3	0	6	3	0.2	
20	13.9	11.7	09.9	1.9	6.1	13.4	9.5	4.6	4.7	5.7	66	41	64		0	SSW	3	SW	2	1	2	10●		● tr. von 6¾ p an, ● abd.
21	13.7	14.8	14.4	3.9	6.2	11.2	10.1	4.4	3.5	4.0	62	35	44	NNE	3	NNW	1	ENE	2	9	2	1	2.3	● n bis 3¼ a.
22	12.7	09.7	08.0	0.6	4.1	11.2	6.8	4.4	4.7	5.5	72	48	74		0	SSW	4	SSW	3	3	9	10		⊕ mg., ● abd.
23	97.4	96.1	96.3	3.8	6.6	6.9	7.3	6.5	**6.9**	6.8	90	93	89	SSW	4	S	4	WNW	3	10●	10	9	1.0	● n, ● tr. mg., ● a.
24	97.2	97.6	99.8	3.9	5.6	12.1	6.5	5.9	4.3	5.2	86	41	72	WSW	1	SW	4	SSW	3	8	5	8	0.8	● 7¾-9 p.
25	00.4	99.7	00.0	2.5	4.1	9.5	6.7	5.4	5.3	5.5	88	60	76	SSE	1	S	1	SSW	2	2	5	5	0.5	
26	03.1	04.0	04.3	3.2	4.4	11.6	10.5	5.6	5.5	4.7	90	54	50		0	SSW	2	W	2	8	2	1		● tr. 3 p.
27	06.7	06.2	06.4	1.3	8.8	12.6	10.7	3.6	3.8	3.2	42	35	33	N	4	ENE	3	ENE	3	2	5	2	0.0	● tr. 1¾ p.
28	09.5	08.2	07.9	2.9	5.6	13.9	10.8	3.4	3.7	4.4	51	31	46	SE	2	SW	2	SSE	2	2	2	2	0.0	
29	13.0	12.1	10.7	5.3	8.1	10.7	9.9	6.0	5.9	4.7	74	62	51	SSE	1	NW	2	NNE	2	6	7	1		● tr. a, p.
30	07.5	05.8	06.5	4.9	7.9	8.5	4.4	**2.0**	2.6	4.2	25	31	66	NNE	3	NNE	3	ENE	2	3	9	4	0.0	◫ abd.
M.	08.5	07.7	07.5	1.1	3.8	10.7	8.0	4.5	4.6	4.8	75	50	61		1.2		2.3		1.5	4.4	5.0	4.2	27.9	

Oslo. (Kristiania). **1925.**

$H = 22\,m$, $H_b = 24.9\,m$ — $\varphi = 59^0\ 55'$ N

$C_g = 1.35$ mb bei 1009 mb — **Mai.** — $\lambda = 10^0\ 43'$ E

Datum.	Luftdruck. 900 oder 1000 + 8	2	7	Luft-Temperatur. Min.	8	2	7	Absolute Feuchtigkeit. 8	2	7	Relative Feuchtigk. 8	2	7	Richtung und Stärke des Windes. 8	2	7	Bewölkung. 8	2	7	Niederschl.	Bemerkungen.
1	06.5	06.1	07.1	**0.1**	3.4	10.8	9.4	3.8	4.4	5.4	65	46	61	SSW 1	S 2	SW 3	9	2	1		
2	10.1	09.7	07.2	2.2	8.2	7.2	4.9	4.8	6.1	5.7	60	80	89	ENE 2	ENE 3	ENE 5	8	10•	10•		● von $1^1/_2$ p an, p, abd.
3	05.1	06.3	07.7	4.4	5.7	8.8	8.4	6.4	7.1	7.3	94	84	89	0	S 1	0	10•	9	4	14.4	● n, mg., a bis 10 a, $6^1/_4$-$6^1/_2$ p.
4	13.7	14.4	14.9	2.1	5.8	14.6	11.2	5.8	5.1	5.7	85	41	58	SSE 1	SSW 2	SSW 2	0	1	1	1.6	
5	17.8	16.6	15.3	4.8	6.7	14.8	14.0	6.4	7.0	7.0	87	56	59	0	SSW 1	0	10	8	6		⊕ a.
6	16.1	14.6	13.1	6.3	10.7	17.4	15.5	6.5	4.9	5.6	68	34	43	ENE 2	ENE 3	SE 2	10	2	4		
7	12.2	10.5	09.0	7.6	8.7	9.9	9.4	5.8	6.3	7.4	69	69	86	NE 3	ENE 3	NNE 2	10	10	10•	0.6	● $12^1/_2$-3 a, ● tr. a, ● von $2^1/_2$ p an, abd.
8	09.6	10.1	10.1	7.2	7.5	10.7	10.0	6.6	7.1	7.0	86	73	76	NE 2	NE 1	NE 1	10	10	10	12.3	● n bis 3 a, ● tr. p, abd.
9	11.0	10.8	09.4	7.5	9.0	10.4	11.5	7.2	7.7	7.9	84	82	78	E 2	E 3	NE 2	10	10	7	0.0	● $11^3/_4$ a-$1^1/_4$ p, ●^{2} $9^1/_2$-$9^3/_4$ p.
10	13.0	14.0	13.8	7.7	8.9	15.8	12.7	7.6	7.1	8.0	89	54	74	SE 2	SSW 2	S 1	8	6	2	4.1	
11	12.2	09.3	07.0	7.3	9.3	9.8	10.0	7.4	8.2	9.8	86	91	98	E 2	NE 3	0	10•	10•	10•	0.2	● mg. von 7 a an, a, p, abd.
12	10.4	11.7	13.3	7.6	8.4	12.9	10.6	8.1	9.1	8.3	99	83	89	S 3	S 3	SSE 2	10•	6	10	8.6	● n, mg., bis $9^1/_2$ a.
13	15.4	15.0	15.3	7.7	9.5	9.4	12.0	7.6	8.1	8.8	87	92	85	S 2	S 3	0	10	10	1	0.6	● a.
14	19.6	19.1	18.6	3.9	8.6	15.2	14.4	6.7	6.0	7.1	81	47	58	0	S 1	0	3	2	1	0.6	
15	22.0	19.3	17.4	6.0	10.7	17.8	16.5	5.9	5.3	6.0	62	35	43	0	SSW 2	SW 1	0	1	0		
16	17.6	16.1	15.4	6.8	12.1	18.5	16.2	7.8	9.0	8.0	71	57	59	SSE 1	SSW 2	SSW 2	3	1	1		
17	18.7	19.1	18.9	9.4	13.0	18.3	18.2	9.1	9.3	8.3	81	60	54	0	SSE 2	0	8	2	0		
18	**23.2**	21.9	21.3	9.3	13.7	21.7	18.9	8.4	6.7	7.9	72	35	50	SSE 1	SSW 2	WSW 1	0	0	0		
19	**23.2**	20.8	18.5	8.7	12.9	21.8	17.5	7.2	6.5	7.1	65	33	48	SSE 1	SE 3	SSE 2	0	0	0		
20	15.6	10.0	06.1	8.0	12.0	**23.5**	19.0	6.9	8.7	8.3	66	40	51	SSW 1	SSW 2	S 2	0	1	1		
21	08.0	06.7	05.8	8.6	9.0	14.0	12.5	**3.4**	4.6	3.9	40	39	35	NE 4	NE 4	NE 3	9	1	2		⊕ p, abd.
22	05.0	02.7	00.7	6.5	8.4	13.0	12.5	3.7	5.0	5.0	45	45	46	E 2	SSW 2	ENE 2	8	7	8		
23	04.1	05.2	05.3	6.3	7.9	8.8	8.2	5.6	6.3	6.3	71	74	79	ESE 2	E 1	ENE 3	10	10•	9		● zeitw. von $9^3/_4$ a an, p, $9^1/_4$ p-$12^1/_4$ a.
24	09.2	10.3	10.5	4.8	5.4	7.1	6.6	6.1	6.7	6.6	91	88	91	NE 3	ENE 2	ENE 2	10•	10•	10•	1.7	● von 3 a an, a, p, abd. bis 10 p.
25	08.9	08.1	07.4	5.4	7.1	9.9	8.9	5.5	6.2	7.5	73	68	88	ENE 2	NNE 2	NNE 3	10•	10	10•	5.0	● tr. mg., a, ● p, abd.
26	07.4	08.2	07.9	6.9	8.5	9.6	10.7	7.7	8.4	8.9	93	95	93	ENE 2	SW 2	SSW 1	10•	10•	9	12.2	● n, mg., a, p bis $3^1/_4$ p.
27	06.8	05.7	03.1	7.0	10.1	12.2	12.5	8.3	8.4	7.9	89	80	73	0	0	NE 2	10	10	10	1.7	● tr. a, ● abd. von $9^1/_4$ p an.
28	**99.0**	99.5	00.0	10.1	12.1	13.4	13.8	10.0	10.0	**11.1**	96	88	95	SE 4	ESE 3	SSE 3	10•	10•	10•	8.0	● n, mg., a, p, abd. [$8^1/_2$-$10^1/_2$ p.
29	02.4	01.7	02.4	11.7	12.8	14.4	11.6	10.5	**11.1**	9.7	96	92	96	ENE 1	SSE 1	SSW 2	10•	10	10	15.2	● n bis $5^1/_2$ a, ● tr. a, ● $2^1/_2$-$6^1/_2$ p,
30	04.7	02.3	01.3	9.0	10.8	11.0	12.1	8.7	9.3	9.1	90	95	88	SSE 3	SSE 4	SSE 5	10•	10•	9	9.6	● tr. mg., ● a. zeitw. p bis $3^1/_2$ p.
31	02.0	02.7	03.8	9.0	11.7	13.2	12.4	7.4	7.7	7.4	73	68	69	SW 4	SW 4	SSW 4	8	9	9	1.7	● tr. $12^1/_2$ p, ● sch. 2^{15}-2^{22} p.
M.	11.3	10.6	09.9	6.8	9.3	13.4	12.3	6.9	7.2	7.4	78	65	71	1.7	2.2	1.9	7.5	6.4	5.6	98.1	

Juni.

Datum.	8	2	7	Min.	8	2	7	8	2	7	8	2	7	8	2	7	8	2	7	Niederschl.	Bemerkungen.
1	10.1	10.6	10.7	9.1	12.4	15.8	14.3	6.9	7.5	7.5	64	56	62	S 2	SSW 4	SSW 2	1	7	6	0.0	● 9^{40}-10 p.
2	12.9	12.5	12.3	7.5	11.4	16.0	14.0	6.6	7.3	7.6	65	54	64	SSW 3	S 3	S 2	7	3	5	0.5	● 8^{40}-10 p, ☈ 9 p.
3	11.8	10.3	10.0	7.6	9.4	16.1	17.7	7.9	6.3	5.2	89	47	35	S 2	S 3	W 3	1	4	5	1.6	
4	16.7	17.2	17.8	8.7	14.1	17.8	18.4	7.4	6.4	7.1	52	42	45	E 3	SW 2	SW 1	2	4	1		
5	21.1	19.4	19.3	8.1	13.3	21.3	18.1	7.8	7.7	9.7	68	41	63	SSW 2	S 2	S 2	2	1	2		
6	21.6	21.5	19.7	12.3	13.1	17.3	17.8	10.4	11.2	10.0	94	76	66	S 2	SW 1	SSW 2	10	2	2	0.0	●^{0} 7 a.
7	21.3	21.2	20.7	11.2	15.0	22.9	20.6	9.6	9.3	10.4	75	45	58	0	S 2	S 2	7	8	6		
8	24.2	22.7	22.2	11.8	17.0	25.2	25.8	10.8	10.9	9.0	75	46	37	0	SW 2	E 2	5	3	4		
9	**25.5**	22.8	20.7	16.5	19.6	27.1	27.2	9.1	10.4	12.1	53	40	44	SSW 2	S 1	SW 1	0	3	7		
10	21.8	19.3	17.0	17.8	21.7	29.6	**29.8**	12.6	12.5	**13.4**	66	40	43	S 2	SW 2	SW 2	1	1	1		
11	15.9	11.4	10.3	19.4	23.8	28.1	22.5	11.4	12.1	7.6	52	43	38	ENE 2	SW 2	NW 2	7	3	10		
12	11.8	07.9	06.5	12.2	15.1	20.6	18.2	5.6	5.2	5.4	44	29	35	NNW 2	WSW 2	WNW 3	1	3	4		
13	05.4	99.9	94.5	10.1	14.2	16.5	17.0	6.1	7.5	8.3	51	54	58	SSW 3	SSW 3	WSW 3	3	7	10		● tr. zeitw. p, 7-8 p.
14	92.7	94.0	96.3	9.1	14.4	16.4	15.6	4.9	4.3	**3.6**	40	32	27	NNW 2	N 3	NNE 3	4	9	1	0.0	
15	04.0	01.6	01.5	8.2	13.8	21.3	17.0	4.3	5.3	6.9	37	28	48	N 3	S 2	S 3	2	7	7		
16	99.2	95.1	90.4	11.1	15.3	18.7	18.3	6.9	9.5	8.1	54	59	52	0	SSW 3	W 3	7	9	9		● tr. a.
17	91.8	92.1	91.2	9.4	11.5	14.2	12.8	5.4	3.8	4.6	54	32	41	NNW 3	N 3	W 2	10	9	9	0.0	● tr. zeitw. p. [4-$6^1/_2$ p.
18	**89.3**	92.0	97.0	7.3	8.3	14.2	9.3	6.3	8.1	7.4	77	67	86	NNE 3	N 3	NE 2	10•	10	9	0.4	● 5-6 a, von $7^1/_2$ a an, 10^{50}-11 a, 1^{45}-1^{50} p,
19	03.4	03.1	02.2	**7.1**	11.0	19.9	19.6	8.7	8.3	9.6	89	48	56	ENE 1	NE 2	SSW 2	10	8	3	7.1	● sch. 7 a, ● tr. 4 p. [$5^1/_4$ p an, 7-10 p.
20	01.9	00.0	98.2	9.8	10.0	14.2	13.4	8.0	9.9	10.1	87	83	89	NE 2	NE 0	ENE 1	10•	9	10•	2.0	● $5^3/_4$ a, $8^1/_2$-$10^1/_2$ a, ● tr. 4 p, ● p von
21	97.7	01.1	02.9	9.2	12.4	13.5	14.9	9.1	9.7	10.1	86	85	81	E 3	E 3	E 1	10•	10•	9	14.0	● $7^3/_4$-$8^1/_2$ a, von 10 a an, 2-3 p, ●^{0} $4^1/_2$ p.
22	09.2	09.7	09.7	11.3	13.2	18.2	17.9	7.8	8.5	9.1	69	55	60	NNE 3	NNE 2	NE 2	9	6	6	2.5	● tr. $4^1/_2$ p, ● $7^1/_2$ p, 9-11 p.
23	12.1	12.2	11.8	12.1	12.3	15.4	15.1	9.3	10.1	10.4	88	78	82	NE 3	NNE 1	NNE 2	10•	9	10	3.2	● von 6 a an, 8-9^{20} a, 4-5 p.
24	11.2	07.2	05.0	12.1	16.4	22.6	22.2	8.9	8.5	4.9	65	42	24	NNE 3	NE 3	NE 2	9	2	1	2.9	
25	05.3	02.5	00.2	11.1	16.0	20.2	18.1	4.7	6.9	7.9	35	40	52	ENE 2	SSE 1	SW 3	1	2	5		⊕ a.
26	01.3	00.6	00.4	9.6	12.3	18.3	18.6	5.4	10.0	7.5	51	63	47	NNE 3	ENE 2	ENE 2	8	6	8		
27	07.8	08.2	08.3	12.3	14.3	20.0	20.0	6.4	8.3	7.9	54	47	45	NE 2	SSW 2	SE 2	8	7	1		
28	13.1	11.4	11.4	11.1	16.1	22.8	20.6	7.0	8.5	10.4	52	41	58	SE 2	SSW 2	S 2	1	1	1		
29	15.4	15.5	15.9	12.2	14.1	23.3	20.5	10.5	10.1	8.6	88	48	48	SSE 2	SSW 2	S 3	10	1	0		
30	19.0	18.4	18.0	10.3	12.9	24.8	23.4	9.9	7.8	11.1	90	32	52	S 1	WSW 1	SSW 1	9	0	0		
M.	09.8	08.7	08.1	10.8	14.1	19.7	18.6	7.8	8.4	8.4	66	50	53	2.0	2.2	2.1	5.8	5.1	5.1	34.2	

H = 22 m, H_b = 24.9 m
C_g = 1.35 mb bei 1009 mb

φ = 59° 55′ N
λ = 10° 43′ E

Juli.

Datum.	Luftdruck. 900 oder 1000 + 8	2	7	Luft-Temperatur. Min.	8	2	7	Absolute Feuchtigkeit. 8	2	7	Relative Feuchtigk. 8	2	7	Richtung und Stärke des Windes. 8		2		7		Bewölkung. 8	2	7	Niederschl.	Bemerkungen.
1	20.1	18.3	17.0	12.3	16.6	28.0	26.6	10.1	8.2	9.5	71	29	37	SE	1	NNE	1		0	3	2	2		
2	20.1	16.6	15.2	16.2	19.0	25.6	24.0	8.2	8.1	8.2	50	33	36	E	3	ENE	3	ENE	2	1	2	2		
3	15.8	12.8	12.9	14.1	19.7	24.8	21.5	7.4	7.4	9.5	43	32	50	NE	2	ENE	3	ENE	4	1	7	9		● 8-10 p.
4	11.3	11.2	11.0	14.4	17.2	20.1	18.8	11.1	11.2	12.4	76	61	77	ENE	2	NE	3	ENE	2	10	8	9	1.0	● tr. abd.
5	10.6	07.9	06.1	16.9	20.2	25.5	23.9	13.4	13.0	13.3	76	54	61	SE	2	SW	2		0	6	4	5	0.0	● tr. 12½ p.
6	05.1	04.9	05.0	16.7	17.1	18.3	20.7	13.9	15.0	13.9	96	96	77		0		0	SSW	1	10●	9	7	16.5	●² von 5½ a an, ● bis 1¾ p.
7	06.8	06.3	05.9	15.7	16.9	22.5	19.6	12.1	13.6	12.5	85	67	74	SSE	2	SSW	2	SSW	3	10	3	2	22.5	
8	03.8	02.5	03.0	15.9	17.9	22.2	18.0	12.2	13.1	14.4	80	66	94		0	SSW	2		0	9	8	9		● 3¾-6¾ p, ⊼ 3⁵⁰ p.
9	04.4	03.0	02.6	14.1	15.4	19.8	19.8	8.9	8.5	7.7	68	50	45	NNE	3	NE	1	ENE	3	9	8	2	2.9	
10	03.3	01.8	02.2	11.6	16.3	20.5	17.0	**7.2**	8.1	7.9	53	45	55	WSW	3	SSW	3	ENE	4	2	3	8		●⁰ sch. 12 p.
11	08.7	09.7	11.4	**9.8**	13.8	20.5	19.8	8.1	7.9	8.9	69	45	52	NNE	1	SSW	2		0	2	3	9	0.1	
12	17.1	17.3	17.7	13.6	18.0	23.2	22.6	8.9	9.3	11.3	58	44	56	SW	2	SSW	2	SSW	2	2	2	1		
13	21.6	20.8	20.9	14.6	17.6	25.6	22.0	12.6	10.4	8.0	84	43	41	S	2	S	3	S	3	2	2	1		
14	21.5	19.9	18.8	15.5	17.9	25.5	22.0	12.2	9.8	10.5	80	41	54	S	2	S	3	S	2	2	2	2		
15	19.0	16.8	15.8	15.6	16.4	25.5	22.7	12.6	12.4	12.0	91	51	59	SSE	2	S	3	S	3	10	2	1		
16	16.0	14.1	12.6	14.7	18.4	23.4	23.1	12.7	12.0	10.7	80	56	51	S	1	SW	2	SSW	3	1	3	2		
17	13.0	10.9	09.2	14.7	19.0	26.3	24.2	12.9	10.3	11.3	79	41	50	SSW	1	SW	3	SW	2	1	1	2		
18	11.2	11.3	10.9	15.1	20.2	25.2	24.7	12.2	12.5	10.8	69	53	47	SSE	1	S	1		0	8	2	1		
19	13.8	13.9	13.9	16.9	22.4	28.5	26.5	12.0	12.3	12.7	60	43	50	E	1	SSW	2		0	7	5	1	0.0	● tr. 7½ a, ⊼ 12⁴⁰ p.
20	17.9	17.5	17.1	17.0	21.2	29.7	27.9	12.8	12.1	12.5	68	39	45		0	SSW	1	SSW	1	0	3	2		
21	21.1	20.3	19.6	17.9	23.0	31.8	29.3	13.9	11.5	14.3	66	33	47	SSW	1	SW	2	SW	2	1	2	1		
22	**22.0**	20.3	18.9	18.2	22.0	**32.6**	28.6	13.2	10.4	13.0	67	28	45	SSW	1	SSW	2	SSE	2	0	1	1		
23	18.9	16.6	15.3	17.9	21.7	32.3	27.7	13.7	11.5	13.0	71	32	47		0	S	3	SSE	2	1	1	1		
24	15.9	14.4	13.1	18.8	22.2	29.5	26.2	14.7	11.7	10.7	74	38	43	SSE	1	SSW	3	S	3	0	1	1		
25	13.6	11.2	09.4	16.2	20.8	28.6	25.1	10.3	11.8	14.1	56	40	60	ENE	2	SSW	2	NE	2	2	9	3		⊼ 2¹² p, ● 2½-3½ p. [7½ p-12¾ a
26	08.2	04.3	04.3	19.6	22.6	28.2	18.7	14.0	12.9	13.7	69	45	86	NE	3	ESE	2	ENE	2	3	7	10	4.0	⊼ 11³⁷ a, ● tr. 12½ p, ⊼ p, ● 4½-6½ p,
27	02.3	00.9	99.6	16.7	19.6	19.2	19.0	15.3	**15.6**	15.4	90	94	94	S	2		0	SSW	3	10*	10●	10●	21.0	⊼ n, ● tr. mg., ● a, ⊼ 11⁴⁴ a, ⊼ u. ● p,
28	99.9	99.5	99.6	15.8	16.9	20.4	19.2	11.0	11.1	10.3	77	63	62	SSW	4	SW	3	SW	3	3	2	1	14.3	[● abd. bis 10 p.
29	99.0	98.0	97.5	13.4	16.7	14.6	14.8	10.3	11.1	10.5	72	90	84	E	2	ENE	1	NE	1	8	7	8●		⊼ 11³³ a, ● 12½-1¾ p, ● tr. von 6 p,
30	97.6	96.4	96.1	11.8	15.8	21.4	16.4	10.8	9.7	9.6	81	51	69	SE	2	S	3	SW	1	6	3	9●	2.5	● tr. p, ⊼ 6¹⁶ p, ● 7½-10¼ p. [an, abd.
31	95.7	95.3	**94.9**	12.8	14.7	16.2	15.7	11.1	11.4	10.9	89	83	82	ESE	1	W	1	ENE	1	5	9●	7●	6.9	● von 1¼ p an, ⊼ 1³² p, ● shh. u. ⊼ p.
M	11.5	10.2	09.6	15.3	18.6	24.4	22.1	11.6	11.1	11.4	72	51	59		1.6		2.1		1.8	4.4	4.2	4.2	90.7	

August.

Datum.	Luftdruck. 8	2	7	Luft-Temperatur. Min.	8	2	7	Absolute Feuchtigkeit. 8	2	7	Relative Feuchtigk. 8	2	7	Richtung und Stärke des Windes. 8		2		7		Bewölkung. 8	2	7	Niederschl.	Bemerkungen.
1	94.4	**93.8**	**93.8**	13.3	14.7	20.4	16.7	10.5	10.6	10.8	85	59	76	ESE	3	SSW	2		0	4	6	4	1.8	⊼ 2¹² p.
2	94.4	95.7	97.0	13.8	16.0	16.7	16.3	11.2	11.8	10.9	83	83	79	ESE	2	SSE	3	SSW	3	8	8	8		● 11-12 a.
3	00.8	01.2	01.3	14.1	16.4	19.6	17.8	11.0	10.3	10.8	79	61	71	S	1	S	4	SW	1	9	7	6	2.4	⊼ 4¹³ p, ● sch. 4½ p.
4	01.8	00.0	99.0	12.1	15.9	23.0	20.5	10.9	10.5	11.7	81	50	65	SE	1	WSW	2	SW	2	2	5	3	0.1	● tr. 11½ a, ⊼ 2 p, ● sch. 3 p. [⊼ p.
5	99.3	97.3	97.9	14.8	15.8	21.6	20.1	11.4	11.3	11.3	85	60	65		0	SSW	2	ENE	1	10	2	3	0.1	● 7-7½ a, ⊼ 7¼ a, ● tr. a, ● sch. 3½ p,
6	00.0	00.6	02.2	12.9	16.4	22.7	20.3	10.7	9.7	10.5	77	48	58		0	NNE	2	ENE	1	8	3	3	0.2	● sch. 10½ a, ● tr. zeitw. a, ⊼ 12³⁴ p,
7	07.2	07.4	08.2	13.0	16.6	**25.0**	21.4	10.7	11.4	12.5	76	48	66		0	SSW	1	SSW	1	3	2	1	0.2	⊼ 3⁷ p. [● tr. u. ⊼ p.
8	11.9	12.0	11.6	15.3	15.9	22.4	20.0	12.0	13.0	11.5	89	65	66	ENE	1	SW	2	SSW	3	9	2	2		
9	12.7	12.8	12.2	15.8	17.4	23.1	18.2	12.7	10.7	12.0	86	51	77	S	1	SSW	4	S	3	7	4	10		● abd. von 7½ p an.
10	07.2	05.7	05.1	14.6	15.7	19.1	19.6	12.7	**15.0**	14.5	96	91	86		0	SSW	2	SSW	4	10●	1	4	8.4	● n, mg. bis 10½ a.
11	01.2	02.8	04.0	14.5	14.6	21.2	18.3	11.7	11.8	12.3	94	64	79	NW	2	S	4	S	4	9●	5	9	11.0	● 4-8 a, ● tr. a, ● sch. 6¾ p.
12	11.9	13.8	14.4	12.0	14.8	21.6	18.0	9.4	9.5	10.6	75	50	69	SSW	1	SSW	4	SSW	4	1	1	6	0.1	
13	15.9	15.3	13.3	14.2	16.1	15.7	17.3	12.3	12.7	13.8	90	96	94	S	2	SSW	5	SSW	2	9	10●	10	0.3	● 6¼-7 a, 11 a-3 p.
14	11.2	10.3	10.7	15.5	17.0	21.0	17.6	11.5	7.3	**6.3**	80	39	42	SW	3	E	4	E	3	1	1	1	9.2	
15	12.2	10.7	10.4	9.9	13.6	20.2	17.1	7.2	7.6	7.5	62	43	52		0	SW	2	ENE	3	5	9	8		
16	11.7	09.4	07.1	9.8	13.0	19.4	18.2	6.6	6.6	7.7	59	39	50		0	S	2	S	1	1	1	9		
17	04.5	02.2	01.4	12.2	12.2	17.9	16.5	8.1	8.7	7.0	76	57	50	NE	2	S	2	NNE	2	10●	5	1	0.2	● von 4¼ a an, mg., ● tr. a.
18	97.9	97.2	98.1	11.9	14.6	17.4	16.9	8.9	9.6	9.3	72	65	65	NW	1	NNE	3	ENE	3	10●	10	10	0.5	● 2-3 a, ● tr. mg. von 7¾ a an, ● sch. a, p.
19	04.6	04.4	04.3	12.7	15.0	20.0	18.2	9.3	9.6	10.2	73	55	66	NE	1	SSW	2		0	3	4	2	1.2	
20	04.9	04.5	04.1	13.6	16.4	20.4	17.6	11.7	12.2	11.3	84	68	75	S	2	S	2	S	1	3	8	9		● tr. a.
21	04.8	05.3	06.0	14.7	15.8	21.8	17.8	11.6	10.0	10.4	87	51	69		0	S	2	SSW	1	9	3	2	0.0	● tr. abd.
22	10.1	11.1	11.8	14.0	15.8	19.3	17.8	10.8	11.8	11.7	81	71	77	ENE	3	S	1		0	9	9	6	0.0	● sch. 8¾ a u. 4¾ p.
23	14.7	14.5	14.2	14.9	16.7	21.5	18.7	11.7	11.2	10.2	82	61	63	SE	2	ENE	3	E	3	8	6	7	0.3	● tr. 1½ p.
24	14.5	13.2	12.0	14.4	15.0	18.6	17.8	9.7	9.9	10.4	76	62	69	ENE	4	E	3	ENE	3	10	9	9	0.0	
25	12.1	11.4	11.4	14.8	14.9	18.2	18.6	9.0	9.2	9.5	71	59	60	NE	3	ENE	4	NE	2	9	9	8		
26	15.6	14.7	14.4	13.1	15.0	19.5	17.5	9.0	7.3	7.9	71	44	53	ENE	3	E	3		0	4	2	2		
27	**16.0**	14.3	12.1	12.8	14.5	19.8	17.0	8.0	8.0	8.6	65	47	60	ENE	2	S	2	SE	1	2	6	10		
28	08.8	08.1	09.1	12.4	12.4	15.6	15.1	10.0	11.1	10.7	94	84	84	ENE	3	SE	2	E	2	10●	9	2	7.3	● von 1¾ a an, mg. bis 12 a.
29	04.1	99.0	97.9	9.8	13.2	17.3	15.5	10.6	13.3	8.3	95	91	63	S	2	SW	2	SW	3	10	7	1	6.8	● tr. mg., ● 10 a-12½ p.
30	99.6	02.1	04.5	9.9	13.6	20.4	16.8	6.9	6.4	6.9	59	36	49	NNE	1	WNW	4	NNE	2	1	4	3	4.9	
31	08.6	04.1	99.0	**6.7**	9.8	12.2	12.6	6.9	8.7	9.3	76	83	87		0	S	3	SSE	2	1	10●	9		⊕ mg., ● a von 12½ p an.
M.	06.9	06.3	06.1	13.0	15.0	19.8	17.8	10.2	10.2	10.2	79	61	67		1.5		2.7		2.0	6.3	5.4	5.4	55.0	

Oslo. (Kristiania). **1925.**

$H = 22$ m, $H_b = 24.9$ m — $\varphi = 59^0\ 55'$ N

$C_g = 1.35$ mb bei 1009 mb — $\lambda = 10^0\ 43'$ E

September.

Datum.	Luftdruck. 900 oder 1000 + 8	2	7	Luft-Temperatur. Min.	8	2	7	Absolute Feuchtigkeit. 8	2	7	Relative Feuchtigk. 8	2	7	Richtung und Stärke des Windes. 8	2	7	Bewölkung. 8	2	7	Niederschl.	Bemerkungen.
1	93.1	91.6	89.7	6.9	9.6	16.3	14.8	6.7	6.6	6.8	75	48	54	SW 3	SW 4	SW 3	1	8	2	0.5	● tr. 1 p.
2	87.0	85.1	**84.7**	8.1	10.6	16.0	13.3	6.4	6.1	6.1	68	45	53	SW 2	WSW 3	WSW 2	4	9	3	0.0	
3	86.8	86.2	86.3	6.2	10.4	17.6	14.0	6.3	6.6	7.0	68	44	59	0	SW 2	NNE 1	8	2	2		
4	87.6	87.0	86.7	5.2	9.0	15.8	10.5	7.4	**5.7**	6.2	87	42	65	SSE 2	WSW 3	WSW 2	1	9	9		
5	86.3	87.7	89.8	7.9	9.6	14.8	9.9	7.1	6.9	8.3	80	55	91	NE 1	NE 1	NW 2	8	7	7		● tr. 1^{25} p, ● ^{2} sch. $2^3/_4$ u. $4^1/_4$ p.
6	92.2	92.1	92.5	6.8	9.2	14.8	12.1	6.6	7.9	8.1	76	63	78	NNE 2	NE 2	ESE 1	2	9	4	1.8	● tr. 1 p, ● sch. $1^1/_2$ u. $2^1/_2$ p, ● tr. $4^1/_2$ u.
7	95.9	96.6	97.9	6.1	9.6	13.7	10.5	7.4	9.7	8.0	84	83	85	0	WSW 1	0	9	5	7	0.5	● 12 a-1 p. $10^1/_4$ p.
8	00.9	00.5	00.7	7.4	10.7	16.0	13.6	7.3	7.0	7.6	76	52	65	NE 1	WSW 1	0	3	7	8	2.0	● tr. a.
9	03.5	03.8	04.4	9.7	11.7	16.7	13.0	8.3	8.0	8.1	81	56	73	0	NW 2	E 1	9	9	8	0.0	
10	06.3	06.2	06.7	10.9	11.7	15.0	12.4	7.8	7.5	7.5	76	59	70	NE 2	E 1	ENE 2	9	5	9		● ^{2} sch. $2^3/_4$ p.
11	09.8	10.1	11.2	9.9	12.0	15.1	11.4	7.4	6.4	6.8	71	51	73	ENE 4	NNE 4	0	8	5	1	0.4	● tr. 2^{20} p.
12	15.5	14.9	15.3	6.1	9.3	16.6	11.6	6.0	6.3	6.6	69	45	64	NNE 1	NNE 1	0	1	2	1	0.0	
13	19.8	19.3	19.2	**3.8**	6.4	16.6	12.6	6.1	7.2	8.1	86	51	75	0	SSW 2	SSW 1	1	3	1		
14	19.5	17.7	16.7	4.9	7.0	16.8	13.0	6.7	7.9	8.6	89	56	77	0	SSW 2	S 2	1	1	2		
15	19.0	18.2	17.8	6.6	9.9	**18.9**	14.7	7.8	9.8	8.8	86	55	71	ENE 1	S 1	0	6	3	1		
16	17.4	15.0	14.0	7.0	9.3	18.6	14.1	7.4	8.4	8.7	86	53	73	0	S 1	0	1	2	2		
17	14.0	13.5	13.0	8.8	11.7	17.2	12.6	9.1	9.4	8.6	89	64	80	ENE 2	SW 2	0	10	3	5		
18	13.0	11.5	10.1	10.7	11.8	15.2	11.4	8.9	8.6	9.3	87	67	93	ENE 2	SSE 2	SSE 2	9	9	10●	0.4	● sch. $6^1/_2$ a, ● tr. a, ● p, abd.
19	09.2	09.1	08.4	9.9	9.9	11.3	11.4	8.6	9.2	9.2	95	93	92	E 2	ENE 2	ENE 1	10●	10●	10	18.4	● n, mg., a, p, abd.
20	99.2	96.8	99.8	9.7	11.1	13.1	12.0	9.1	9.7	8.2	93	87	79	SE 4	S 5	S 4	10●	6	3	12.5	● n, mg., a bis 1 p, ⟨ 1^{40}-1^{50} p.
21	97.5	93.5	87.6	9.9	11.5	15.4	11.1	9.4	9.4	9.2	93	72	94	SSE 4	SSE 2	SSE 4	10●	9	10●	9.7	● $2^3/_4$-9 a, ⟨ $4^1/_2$ p, ● $4^3/_4$-$7^1/_2$ p.
22	92.8	96.0	97.2	8.5	10.8	15.3	11.6	7.7	7.1	8.8	81	55	87	SSW 3	SSW 3	SSW 3	9	2	9	5.5	
23	86.4	85.5	86.5	10.4	10.4	15.5	11.8	8.7	9.8	9.3	93	75	91	SE 4	S 4	SSW 4	10●	9	3	6.8	● sch. $12^1/_2$-$2^1/_4$ a, ● 6-10 a, p.
24	95.9	98.6	01.4	9.8	10.6	15.3	11.8	8.3	8.1	8.8	89	62	86	S 2	SSW 3	SSW 3	2	4	2	6.5	♊ 10 p-$12^1/_2$ a.
25	05.7	06.4	06.9	7.5	8.3	13.6	10.4	7.6	7.8	7.8	93	68	84	0	S 1	0	10	1	2		
26	06.8	06.7	06.8	7.5	8.3	10.0	7.3	7.4	7.6	6.7	91	83	88	SW 2	0	NE 1	10	10	1		
27	09.3	10.6	11.8	4.3	7.1	10.4	7.4	6.6	6.6	7.0	87	70	91	E 1	NE 1	0	10	3	2		
28	16.9	17.3	16.5	5.0	8.2	15.0	9.6	7.3	7.2	7.8	91	57	88	0	N 2	0	8	6	2		
29	11.7	09.6	09.4	7.3	10.5	12.2	12.2	7.3	10.2	**10.3**	76	97	98	S 3	S 1	0	10●	10●	10	0.0	● tr. mg., ● a, p.
30	18.8	19.4	**19.9**	4.7	5.1	13.0	8.7	6.1	7.0	6.8	92	63	81	0	S 1	0	5	1	1	1.7	
M.	04.0	03.6	03.6	7.6	9.7	15.1	11.7	7.5	7.9	8.0	84	62	79	1.6	2.0	1.3	6.5	5.6	4.6	66.7	

Oktober.

Datum.	8	2	7	Min.	8	2	7	8	2	7	8	2	7	8	2	7	8	2	7	Niederschl.	Bemerkungen.
1	18.5	15.9	17.6	4.3	6.1	17.1	14.5	6.5	**9.2**	9.1	93	63	74	0	SSW 5	ESE 2	3	2	2		
2	11.0	10.1	12.5	5.9	13.2	**19.9**	13.8	8.8	7.1	5.3	78	41	46	SSW 5	WSW 3	WSW 2	2	5	6		
3	02.1	01.4	03.4	11.4	12.8	15.7	9.6	8.7	5.4	4.7	80	40	53	SW 3	W 3	0	9	3	0		
4	12.2	14.4	12.5	2.4	4.0	11.1	9.0	3.5	3.3	4.5	58	33	52	W 2	W 4	WSW 3	1	3	4		⊔ mg.
5	10.9	15.1	17.5	3.6	7.8	11.9	6.3	3.4	3.0	3.5	44	29	49	NNE 3	NNE 2	0	1	1	0		
6	07.6	01.8	96.9	3.7	5.7	13.7	12.0	5.4	7.2	6.1	79	61	58	S 2	SW 1	WSW 3	8	1	1	0.0	● sch. $5^3/_4$ a.
7	05.5	08.7	11.2	4.6	5.8	11.7	7.3	3.7	4.1	3.9	54	42	51	0	NW 3	NNW 2	1	3	1		
8	20.1	20.0	19.4	0.1	1.1	10.4	6.2	4.0	3.7	4.9	81	39	69	0	SSW 2	0	0	1	1		⊔ mg.
9	10.1	07.7	06.5	0.7	8.2	16.4	12.0	6.1	5.7	6.5	75	41	63	SSW 3	SW 4	SW 3	8	1	1		♊ 7 p-$12^1/_2$ a.
10	04.6	06.8	09.5	7.3	7.8	10.7	5.9	5.9	3.2	2.8	75	33	40	0	NE 3	NE 2	2	7	8		
11	10.4	08.5	05.9	-1.8	0.2	7.6	3.3	3.0	2.8	3.1	63	35	53	ENE 1	SSW 3	0	0	1	7		⊔ mg.
12	03.3	01.4	00.5	-2.7	-2.0	7.3	1.8	3.0	2.9	3.1	76	38	59	0	SSW 2	0	1	1	0		⊔ ^{2} mg.
13	94.8	92.2	91.7	-2.1	-0.5	5.0	1.1	3.6	3.1	3.2	80	48	62	0	ENE 2	0	10	7	1		⊔ ^{2} mg.
14	94.1	94.7	97.6	-0.7	0.4	3.8	1.4	2.7	2.7	3.8	56	45	74	NNE 3	N 4	N 3	1	9	10		✳ $3^3/_4$-$6^1/_2$ p.
15	03.5	00.9	00.4	-3.2	-2.8	5.8	2.5	2.4	2.4	2.8	62	34	51	0	SW 3	SW 2	1	1	2	0.1	
16	03.6	02.9	04.4	-3.0	-2.5	6.9	2.4	2.7	3.0	2.9	70	40	52	0	NW 1	NW 1	2	1	0		
17	06.7	05.7	04.5	-3.2	-3.2	4.4	0.4	2.9	3.5	3.0	80	55	64	0	0	0	2	8	0		
18	06.4	08.1	09.5	-3.4	-0.5	3.0	-0.6	2.8	**2.0**	2.1	62	36	47	NE 2	NE 2	NNE 2	2	1	1		
19	12.0	12.6	14.0	**-6.5**	**-6.5**	3.6	-1.0	2.3	2.8	2.7	80	48	63	0	SSE 1	0	2	0	0		
20	15.2	13.4	11.4	**-6.5**	-4.8	4.2	0.6	2.9	3.4	3.6	91	55	82	0	SSW 2	0	10≡	1	0		≡ mg., ≡ ^{0} a.
21	07.2	06.5	06.0	-4.9	-2.7	2.8	2.4	2.8	3.0	3.4	74	54	61	E 2	ENE 3	E 3	9	9	10		
22	01.1	97.7	94.8	-2.8	1.3	2.0	2.2	4.7	4.8	4.9	92	91	91	ENE 3	ENE 3	NE 2	10●✳	10●	10●✳	0.8	● ✳ n, mg., a, ● p bis $3^1/_2$ p, ● ✳ von $6^1/_2$ p
23	91.7	87.7	**87.0**	1.0	2.9	4.0	5.3	5.2	5.3	6.2	93	85	94	ENE 3	NE 5	NE 3	10●	10●	10●	11.0	● n, mg., a, p, abd. an, ● abd.
24	87.7	87.5	88.2	2.8	7.6	9.3	9.8	7.2	7.9	8.3	93	91	92	ENE 3	ENE 3	ESE 3	10	10	10	20.7	● n, a, $5^1/_2$-$6^1/_2$ p, abd.
25	91.4	95.1	96.8	7.6	9.2	9.7	9.1	8.4	8.9	8.5	98	99	99	0	SSE 2	0	10	10	10	9.4	● n, $11^1/_2$ a-$1^1/_2$ p, abd.
26	99.4	02.0	03.5	8.5	8.6	9.6	8.4	8.2	8.2	8.0	99	92	97	0	S 3	S 2	10	9	8	4.5	
27	00.2	98.5	97.6	7.5	8.3	9.1	9.2	7.7	8.4	8.6	94	98	99	SSE 4	SSE 3	SSE 2	10●	10●	10	4.1	● n, mg., a, p, abd.
28	93.6	95.8	99.2	8.2	9.5	11.6	9.3	8.5	8.3	7.6	96	82	88	S 5	S 4	S 2	10●	6	3	17.9	● n, mg., ● tr. a, bis 9 a.
29	06.5	06.2	02.5	3.3	3.3	6.5	8.3	5.5	6.5	8.0	95	90	98	0	0	0	2	10●	10●	0.1	● von $12^1/_2$ p an, p.
30	09.4	11.9	13.4	3.2	4.2	5.2	5.2	6.0	6.3	6.4	97	95	97	0	E 1	0	10	10●	10●	6.9	● n, von $1^3/_4$ p an, p, abd.
31	18.9	22.9	**25.9**	3.8	5.5	4.7	2.6	6.0	5.8	5.2	89	90	94	NE 2	E 2	ENE 2	10	10●	10●	2.1	● tr. von $10^1/_2$ a an, ● p, ✳ abd.
M.	05.2	05.0	05.2	1.6	3.5	8.5	5.8	5.0	5.0	5.1	79	59	70	1.5	2.5	1.4	5.4	5.2	4.7	77.6	

$H = 22\,m$, $H_b = 24.9\,m$ — $\varphi = 59^0\ 55'$ N

$C_g = 1.35\,mb$ bei $1009\,mb$ — $\lambda = 10^0\ 43'$ E

November.

Datum.	Luftdruck. 900 oder 1000 + 8	2	7	Luft-Temperatur. Min.	8	2	7	Absolute Feuchtigkeit. 8	2	7	Relative Feuchtigk. 8	2	7	Richtung und Stärke des Windes. 8	2	7	Bewölkung. 8	2	7	Niederschl.	Bemerkungen.
1	27.3	28.5	28.7	-0.1	-0.1	0.0	-0.8	4.5	4.4	4.1	98	96	95	ENE 3	ENE 4	ENE 2	10*	10*	10*	10.8	✱ n, mg., a, p, abd.
2	25.4	23.5	21.1	-0.9	-0.8	0.1	0.7	4.2	4.4	4.5	97	94	92	ENE 2	E 2	ENE 2	10*	10*	10	21.2	✱ n, mg., a bis 3½ p.
3	13.5	09.4	06.1	-1.0	0.7	1.7	1.6	4.7	4.7	4.8	96	91	93	ENE 2	ENE 1	NE 2	10*	10●*	10	7.7	✱ 8 mg., ● ✱ a bis 3 p.
4	94.0	94.8	97.3	0.6	2.0	2.6	1.3	4.4	4.4	4.6	82	80	91	NNE 2	ENE 2	ENE 1	9	2	10	0.6	
5	99.8	98.7	96.5	1.2	1.2	2.2	-0.2	3.9	4.6	4.2	77	86	93	NE 1	0	0	9	9	3		
6	92.4	93.5	95.9	-3.8	-3.8	2.1	-1.3	3.5	3.4	3.3	99	62	79	0 N	3 N	2	10=	2	2		≡ n, mg.
7	99.3	98.7	98.3	-5.8	-5.8	-1.6	-6.1	2.1	2.4	2.2	70	59	75	N 2	NE 2	0	2	1	0		
8	99.1	99.9	99.9	-7.6	-6.4	-7.2	-8.8	1.9	2.0	2.1	66	73	86	N 2	NNE 3	0	9	8*	0		✱ fl. 1¾-2¼ p.
9	00.8	01.2	03.0	-9.5	-5.8	-3.3	-5.0	2.3	3.1	2.4	76	85	75	NNE 2	ENE 2	NNE 2	10	2	9	0.0	
10	06.7	07.8	10.6	-6.6	-6.6	-4.0	-5.3	2.0	2.2	1.9	71	64	61	NNE 3	NNE 4	NNE 4	2	8	2		✱ fl. a, ♊ abd.
11	19.1	22.7	25.8	-9.8	-9.8	-2.4	-6.0	2.0	2.8	2.6	88	73	87	0	0	0	2	0	2	0.0	
12	29.1	27.7	26.3	-9.8	-7.6	-4.9	-4.1	2.5	3.0	3.2	96	93	94	0	0	0	10≡	8	10≡		≡ mg., abd.
13	23.5	21.7	20.7	-7.6	-6.3	-3.8	-2.7	2.7	3.0	3.5	92	84	93	0 ENE	2 ENE	2	7	2	10		✱ abd.
14	16.0	14.3	14.3	-6.5	-1.0	0.6	0.0	3.9	4.1	4.3	90	86	93	0	0	0	10≡	10	10*	0.4	✱ n, ≡ mg., a, ✱ fl. von 5¾ p an, ✱ abd.
15	17.1	17.9	18.0	-1.8	-1.8	-0.3	-3.6	3.6	3.7	3.1	89	83	87	0 WSW	1	0	8	9	2	0.1	
16	18.3	18.3	17.6	-7.4	-6.6	-4.8	-4.0	2.6	3.0	3.1	91	93	89	0	0	0	8	10≡	10*		✱ fl. p von 3¼ p an, ✱ abd.
17	26.8	29.7	31.6	-6.6	-5.6	-1.9	-3.5	2.8	3.6	3.3	93	89	92	0	0	0	2	3	4	0.3	
18	**32.5**	31.1	29.5	-7.4	-5.6	-4.2	-4.8	2.9	3.3	3.1	95	96	96	0	0	0	10*≡	10≡	10≡	0.0	≡ mg., ✱ von 7¾ a an, a, ≡ a, p, abd.
19	25.1	20.5	17.4	-7.0	-5.6	-3.4	-1.3	2.9	3.4	4.2	95	95	99	0	0	0	10	10	10	0.0	≡ n.
20	10.3	11.3	14.2	-5.6	2.8	**4.7**	2.2	5.1	**5.5**	5.0	91	86	93	ENE 1	0	0	2	1	6		
21	08.2	08.1	10.1	0.7	0.7	3.6	2.1	4.6	4.9	5.0	94	83	93	0 ENE	2	0	4	7	10●		● tr. von 5¾ p an, ● abd.
22	09.2	04.3	97.7	-1.0	1.4	1.6	1.7	4.6	4.7	5.1	91	91	98	SE 1 SSE	2	0	10	10	10≡	4.0	● n, ≡ p, abd.
23	02.1	04.2	04.6	-3.2	-3.2	-1.2	-3.2	3.6	4.1	3.5	00	97	95	0	0	0	10≡	2	7		≡ n, mg.
24	96.7	00.0	99.7	-6.8	-6.0	-0.6	-3.8	2.7	1.9	2.3	91	43	65	0 NNE	2	0	8	1	2		
25	99.2	01.1	04.1	-7.5	-7.5	-2.8	-4.5	2.3	2.8	2.0	87	74	60	0 SSW	2 SSW	1	2	1	0		
26	09.1	06.5	00.1	-8.4	-7.8	-4.0	-2.6	2.0	2.6	2.4	78	74	63	0 S	1 SSW	2	3	7	10		✱ 8½-10 p.
27	**86.8**	87.2	88.1	-8.0	-2.3	-2.6	-3.5	3.7	3.2	2.8	96	84	77	WNW 1 N	1 NNE	1	10*	9*	10	3.0	✱ von 7½ a an, a, ✱ fl. p.
28	90.5	97.9	04.4	-7.2	-1.4	-1.7	-3.8	3.7	3.2	2.4	88	78	69	ENE 3	ENE 5	ENE 4	10*	10*	3	0.7	✱ mg., a, p, abd.
29	08.7	08.3	07.7	-6.2	-6.2	-5.9	-7.3	1.9	1.9	2.0	67	65	73	NNE 2	ENE 2	0	10	9	10	1.2	
30	07.7	08.0	09.3	-10.7	-10.4	-12.2	**-14.6**	1.7	1.7	**1.4**	80	93	91	ENE 1	ENE 3	ENE 2	3	2	0		
M.	09.8	09.9	10.0	-5.4	-3.8	-1.8	-3.0	3.2	3.4	3.3	88	82	85	0.9	1.5	0.9	7.3	6.1	6.4	50.0	

December.

Datum.	8	2	7	Min.	8	2	7	8	2	7	8	2	7	8	2	7	8	2	7	Niederschl.	Bemerkungen.
1	09.2	08.7	09.1	-16.2	-16.0	-15.4	-17.2	1.3	1.2	**1.0**	95	85	84	ENE 2	ENE 2	NE 2	2	1	1		
2	09.1	11.0	13.9	**-17.8**	-17.0	-12.8	-13.7	1.1	1.4	1.5	84	80	92	ENE 2	E 2	0	2	2	3		
3	19.4	23.2	**27.0**	-17.5	-14.0	-9.9	-12.4	1.4	1.8	1.6	87	81	89	NE 2	E 1	0	7	2	4		
4	**27.0**	25.7	25.5	-14.2	-10.2	-11.4	-10.6	2.0	1.8	1.9	94	90	90	NW 1	E 2	0	10	10	10		
5	24.6	22.6	19.3	-11.4	-9.0	-6.5	-6.0	2.0	2.5	2.7	85	86	92	ENE 1	ENE 1	0	10	10	10		
6	01.1	03.9	08.9	-9.3	-1.4	1.1	-1.4	3.8	4.4	3.2	92	89	77	0	0	NE 1	1	1	2		
7	16.9	16.3	15.7	-7.7	-7.7	-5.9	-4.3	2.4	2.7	3.0	90	89	89	ENE 1	0	0	2	2	10≡		≡ abd.
8	14.0	13.4	12.4	-8.4	-0.5	1.1	0.2	4.3	4.5	3.9	97	90	83	0 SE	3 S	2	10	10	10		
9	06.8	03.4	00.3	-0.5	-0.4	-0.5	-0.2	3.8	4.1	4.3	85	93	95	SE 2 ENE	2 ENE	1	10	10*	10*		✱ von 12⁵⁰ p an, ✱² p, ✱ abd.
10	97.3	94.2	93.3	-0.4	0.6	0.0	-0.4	4.5	4.1	4.0	94	89	89	ENE 2 ENE	2 NE	3	10*	10*	10*	6.6	✱ mg., a, p, abd.
11	92.7	93.5	94.3	-0.9	-0.7	0.0	-0.4	4.1	4.0	3.8	93	87	85	NE 1 NE	1	0	9	10*	10	3.8	✱ mg., a, ✱ fl. p.
12	94.9	95.8	96.8	-7.0	-4.5	-4.4	-5.4	3.1	3.1	2.9	94	91	93	ENE 1	0	0	10	4	2	0.6	✱ mg.
13	96.7	96.6	98.7	-11.1	-10.2	-10.4	-10.3	2.0	1.9	1.9	94	87	87	0	0	0	9	3	2		
14	08.3	11.6	14.3	-11.3	-6.6	-6.6	-9.5	2.0	1.9	1.5	71	66	68	NNE 3 NE	2 NE	2	4	1	0	0.0	✱⁰ n.
15	17.0	17.8	18.9	-14.3	-12.8	-10.8	-13.8	1.1	1.3	1.3	63	65	78	ENE 2 NW	1	0	1	1	2		
16	14.2	10.8	08.8	-17.4	-12.8	-11.0	-12.8	1.5	1.7	1.4	84	83	80	NE 1 NE	1 ENE	2	10*	10≡	10	0.7	✱ mg. bis 11 a, ≡ a, p.
17	91.7	94.6	97.4	-13.3	-7.6	-3.2	-5.2	2.5	2.9	1.9	93	78	61	NW 1 N	2 NW	1	10	2	0	0.1	
18	95.9	92.4	91.8	-8.0	-8.0	-3.0	-5.0	1.7	2.0	1.9	68	53	59	W 2 W	3 WNW	1	0	1	0		♊⁰ abd.
19	95.3	98.1	99.8	-10.6	-10.6	-8.4	-13.8	1.6	1.3	1.3	76	51	78	ENE 1 N	2	0	0	0	0		
20	99.6	99.6	98.0	-17.0	-17.0	-15.8	-15.8	1.2	1.1	1.1	94	80	80	0	0 ENE	2	0	3	6		♋ p.
21	88.8	83.0	81.9	-17.0	-7.4	-5.9	-4.6	2.2	2.5	2.4	81	84	73	ENE 4	ENE 4	NE 4	10*	10*	10*	1.2	✱ n, mg., a, p, abd.
22	77.5	82.5	85.9	-7.4	-3.2	-4.6	-9.2	3.4	2.8	2.1	92	86	89	N 3	W 2	WSW 1	10*	1	2	11.7	✱ n, mg., a, ♋ p.
23	82.0	79.1	80.5	-9.6	-4.6	-3.2	-3.7	2.8	2.9	3.3	86	80	94	NE 3	NNE 3	SW 1	10*	10*	10*	5.1	✱ n, mg., a, p, abd.
24	85.4	85.5	85.8	-8.8	-8.8	-8.2	-11.0	2.1	2.2	1.8	89	86	90	NE 2	0	NE 1	1	2	2	9.1	
25	86.5	86.2	86.3	-13.5	-11.8	-10.0	-10.7	1.7	2.0	1.7	89	91	83	ENE 1	0	ENE 2	9	10	10		
26	88.9	90.7	93.6	-15.1	-15.1	-13.8	-15.0	1.3	1.4	1.3	86	83	86	ENE 1	ENE 2	NE 2	2	10	9		
27	94.9	93.1	90.8	-16.9	-16.0	-12.0	-9.7	1.2	1.7	2.0	85	93	88	ENE 2	NE 3	E 3	2	10	10*		✱ p, abd.
28	90.1	90.9	91.9	-16.4	-6.1	-4.0	-3.4	2.9	2.8	3.0	98	82	82	0	ENE 2	0	10*	10*	10	10.4	✱ n, mg., ✱ fl. von 11⁴⁰ a an, p, abd.
29	88.4	83.2	77.5	-6.3	-2.4	0.4	1.1	3.5	4.4	4.7	91	92	94	ENE 1	E 2	NE 1	10*	10*	10	0.5	✱ mg., ✱² a, ✱ p, ● abd.
30	**64.8**	66.8	67.1	-2.5	2.3	**3.9**	2.6	5.3	**5.6**	5.1	98	92	93	SSE 2	SSW 1	SSE 1	9	8	4	11.1	
31	71.3	75.4	81.0	-3.6	-3.6	-4.2	-5.7	3.3	2.6	2.8	92	69	92	0	0	0	2	8	2		
M.	98.4	98.4	98.9	-10.7	-7.8	-6.3	-7.3	2.5	2.6	2.5	88	82	84	1.4	1.5	1.1	6.2	5.9	5.8	60.9	

$H = 8\,m$, $H_b = 10.7\,m$ $\varphi = 58^0\ 4'\ N$

$C_g = 1.15$ mb bei 984 mb **Januar.** $\lambda = 8^0\ 4'\ E$

Datum.	Luftdruck. 900 oder 1000 + 8	2	7	Luft-Temperatur. Min.	8	2	7	Absolute Feuchtigkeit. 8	2	7	Relative Feuchtigk. 8	2	7	Richtung und Stärke des Windes. 8	2	7	Bewölkung. 8	2	7	Niederschl.	Bemerkungen.
1	91.4	93.0	90.7	3.0	5.0	5.8	6.8	5.5	6.1	5.5	84	88	74	SW 4	SW 5	SSW 5	8	9	10•	3.0	● n, ● sch. a, p.
2	71.3	75.7	**63.4**	5.0	7.4	7.4	5.4	5.9	5.9	6.3	77	77	94	SW 9	SW 9	SSE 5	10	9	10•	11.3	● n, p.
3	76.9	77.9	84.7	5.4	5.6	5.0	4.8	5.5	5.9	5.6	82	90	87	WSW 4	W 3	WSW 4	8	7	4	4.4	● n, a.
4	89.4	85.1	87.8	4.8	6.6	4.6	3.4	4.7	5.3	5.2	65	84	90	SW 4	W 1	WSW 3	10	10•	7	5.5	● a, p.
5	00.0	00.2	00.2	2.2	3.2	6.3	5.0	4.8	5.8	5.5	83	81	84	WSW 1	WSW 2	WSW 3	2	7	6	3.2	
6	01.5	05.6	12.2	2.2	3.2	4.4	2.4	4.6	4.1	3.6	80	65	65	NNW 4	NNW 5	WNW 3	6	1	0	1.7	● n.
7	03.5	00.6	02.4	2.4	7.6	9.8	**10.0**	7.1	6.7	6.4	91	74	69	W 3	W 5	NW 9	10	6	1		
8	11.0	11.4	09.4	7.2	8.2	7.4	6.6	6.8	6.6	6.4	83	86	88	WSW 3	WSW 4	WSW 4	10	8	10•		
9	95.9	94.1	08.6	7.0	7.0	7.0	5.6	7.3	6.4	3.9	98	85	58	WSW 3	NW 4	N 1	10•	6	1	2.0	● n.
10	21.6	19.5	17.6	3.6	3.6	7.2	7.4	4.9	6.5	6.8	83	86	89	WSW 1	SW 4	WSW 4	9	10	10		
11	16.1	19.1	22.4	3.3	8.8	8.4	7.8	6.4	7.1	6.8	76	87	86	W 1	WSW 3	W 2	5	10	10		
12	25.0	23.8	24.1	4.8	6.8	7.0	6.0	6.5	6.4	5.9	88	85	85	WSW 1	WSW 3	W 2	10	10	6		
13	22.4	21.1	20.7	4.3	6.0	6.0	6.2	5.7	5.7	6.0	82	82	86	SW 3	SW 3	SSW 4	10	10	10		
14	15.1	09.3	10.0	4.1	5.6	6.4	8.0	6.2	6.8	7.3	91	94	92	SSW 4	SSW 4	SW 5	10	10•	10		● a, p.
15	09.4	08.0	14.0	5.2	7.2	8.0	6.2	6.7	6.2	5.6	89	78	79	WSW 3	WSW 4	WSW 5	10	7	0	8.0	● sch. a, p.
16	22.4	24.2	25.8	5.4	7.4	8.2	7.4	6.6	6.5	6.6	86	81	86	W 4	W 4	WSW 4	8	9	10	0.7	
17	25.8	26.4	26.7	6.6	7.4	7.8	6.6	7.0	**7.9**	6.6	91	00	91	WSW 4	SW 3	SW 1	10	7	6		
18	26.5	27.1	26.3	6.3	7.8	8.0	7.8	7.7	7.8	7.7	98	98	98	WSW 2	SW 2	WSW 4	10≡	10≡	10≡	1.0	● sch. n.
19	34.8	41.4	44.3	5.1	5.6	6.4	2.4	5.1	5.1	4.7	75	71	86	W 1	WSW 1	NNW 1	3	1	1		
20	**45.3**	44.6	43.0	-1.0	-1.0	2.0	1.6	3.9	4.4	4.6	90	82	89	N 1	N 1	N 1	2	7	2		
21	40.4	40.0	39.2	-1.0	2.6	3.0	2.4	4.6	4.9	4.5	82	87	82	SSE 1	ESE 2	E 3	10	10	6		
22	37.7	35.3	32.3	1.0	2.0	2.8	2.6	4.6	4.5	4.6	85	79	82	E 1	E 2	E 3	10	10	10		
23	25.7	23.9	23.3	1.6	2.6	2.2	2.6	4.8	4.4	4.8	86	82	86	E 2	ENE 2	SE 2	10	10	10		
24	26.0	29.2	31.8	1.6	2.6	3.4	2.2	5.3	5.4	5.2	96	93	96	NNE 1	ENE 1	ENE 2	10	10≡	10		
25	37.2	40.2	43.0	1.2	1.2	3.8	4.0	3.9	4.6	4.9	77	77	80	NNE 1	NE 4	E 3	10	10	5		
26	44.7	44.1	42.6	0.2	0.4	2.4	1.4	3.8	4.5	4.3	80	82	85	NNE 3	NNE 1	NE 1	6	8	7		
27	36.0	32.3	29.2	-1.9	-1.4	-0.4	-1.2	3.6	3.5	**3.1**	85	78	73	NNW 2	N 2	ENE 2	10	10	8		
28	21.0	17.5	16.6	-2.1	-0.8	-1.4	-1.6	3.8	3.7	3.7	86	90	90	NE 2	N 2	NE 3	10*	10*	10		* a, p.
29	12.2	01.8	88.8	**-2.3**	1.2	3.6	3.6	4.1	5.5	5.5	81	93	93	SE 1	SSE 4	SSE 5	10*	10•	10•	0.8	* a, ● p.
30	89.4	93.1	95.4	0.7	4.2	4.6	4.4	5.2	5.3	5.4	84	84	87	W 4	W 4	W 4	9	8	7	10.7	● n, ● sch. a, p.
31	83.2	90.2	93.6	4.2	7.4	6.8	5.6	6.2	5.5	5.5	80	74	82	WSW 6	W 7	W 4	9	6	0	3.0	● n, ● sch. a, p.
M.	14.8	14.7	15.2	2.8	4.4	5.1	4.5	5.4	5.6	5.4	84	84	84	2.7	3.2	3.3	8.5	8.2	6.7	55.3	

Februar.

Datum.	Luftdruck. 900 oder 1000 + 8	2	7	Luft-Temperatur. Min.	8	2	7	Absolute Feuchtigkeit. 8	2	7	Relative Feuchtigk. 8	2	7	Richtung und Stärke des Windes. 8	2	7	Bewölkung. 8	2	7	Niederschl.	Bemerkungen.
1	94.3	97.7	04.0	2.4	3.4	4.6	2.8	4.5	4.3	4.1	76	68	72	W 3	W 3	WSW 3	7	8	3	3.3	
2	**18.0**	16.5	11.3	0.4	0.4	5.0	6.2	3.4	5.1	6.7	72	78	94	W 2	WSW 3	SW 4	1	10	10•		● p.
3	12.2	12.4	09.4	0.3	5.8	6.8	6.2	5.4	6.5	6.5	79	88	91	WSW 3	WSW 4	SW 4	4	8	10	0.0	
4	09.7	13.6	16.3	2.4	3.4	5.2	3.8	4.9	5.2	5.2	83	78	87	W 4	WSW 4	WSW 3	6	4	1		
5	05.5	98.7	00.0	3.4	6.4	**7.6**	4.8	6.6	**7.3**	5.6	91	94	87	SW 5	WSW 6	W 4	10	10•	6		● a, p.
6	96.3	97.1	96.2	4.8	5.8	4.0	3.8	6.1	5.3	4.8	88	87	80	WSW 5	W 4	W 3	7	8•	3	2.7	● n, a.
7	96.3	98.7	02.6	-0.4	-0.4	2.0	1.2	4.1	4.2	4.1	91	78	81	NNW 2	NNW 2	NNW 1	6	8	1	1.2	
8	00.9	93.4	85.9	-3.0	3.0	3.4	6.4	4.7	5.6	6.8	83	97	94	S 3	SSE 8	SSW 5	7	10•	10•		● a, p.
9	82.1	84.9	86.8	3.0	5.4	6.0	5.0	5.0	5.5	5.5	75	79	84	W 4	WNW 8	W 4	7•	10•*	6	10.5	● n, * u. ● sch. a, p.
10	94.1	93.4	86.8	3.4	5.4	6.8	7.0	5.7	6.7	6.8	85	91	91	WSW 4	SW 5	SW 7	6	10	10•	3.4	● n, p.
11	88.8	88.5	89.2	4.8	4.8	5.0	4.0	5.8	6.3	5.9	90	97	97	WSW 3	0	0	10•	10•	10•	6.0	● n, a, p.
12	**80.8**	85.5	89.7	4.0	7.2	6.4	5.6	6.7	6.3	5.5	89	88	82	SSE 5	SW 9	WSW 5	10	8	9	9.9	● n, ● sch. p.
13	94.1	96.6	95.9	5.6	6.2	5.8	6.0	6.0	6.3	6.4	86	91	91	S 4	SSE 4	S 4	10	10	10•	2.0	● n, a, p.
14	95.9	95.6	96.6	4.4	5.4	5.0	5.2	6.3	6.1	6.4	94	94	97	E 4	E 4	E 3	10	10	10•	9.8	● n, p.
15	99.8	03.1	03.8	2.6	3.6	4.6	4.4	5.7	6.1	5.8	97	97	93	E 1	ESE 1	ENE 3	10	10	10	15.2	● n.
16	93.7	96.2	00.2	3.3	4.8	6.0	5.6	5.4	6.1	6.2	84	88	91	ENE 8	SE 3	S 4	10	10	10		● a, p.
17	01.1	01.3	01.4	4.3	4.8	5.0	4.4	6.0	5.9	5.8	94	90	93	SSE 3	SSE 3	SE 4	10	10	10•	4.8	● n.
18	00.2	01.2	02.4	3.6	4.6	4.4	3.0	6.1	5.8	5.3	97	93	93	ESE 3	E 2	NE 3	10•	10	10•	6.3	● n, a, p.
19	03.2	06.7	09.6	2.2	2.2	0.2	-1.0	5.0	3.7	3.3	93	79	77	ENE 4	NE 4	NNE 3	10	10	2	3.3	● n.
20	14.9	15.2	14.4	-4.6	-4.6	-1.0	-1.8	2.0	**1.5**	2.9	60	36	72	NNE 3	ENE 1	WSW 1	2	2	1		
21	13.7	14.0	14.1	**-4.9**	-3.4	0.6	1.2	2.6	4.3	4.1	63	88	81	N 1	WSW 1	WSW 1	10*	7	8		* a.
22	16.8	17.5	17.0	-3.8	0.2	1.6	1.2	3.3	3.8	4.1	71	74	81	S 2	S 2	ESE 3	6	7	10	2.6	* n.
23	12.0	10.8	10.4	-0.2	0.8	1.8	1.6	4.1	4.1	4.0	85	78	78	SSE 3	ESE 4	ENE 4	10*	10	8	0.3	* n, a.
24	07.2	05.1	02.8	-1.8	-1.8	-0.8	-1.0	3.4	3.8	3.9	85	86	90	NE 4	ENE 5	ENE 4	10*	10*	10*	0.4	* a, p.
25	98.9	98.6	97.9	-1.8	2.6	2.4	2.0	4.8	5.1	4.9	86	93	93	ESE 4	ESE 5	ESE 4	10	10•*	10•*	3.4	* u. ● n, a, p.
26	94.2	94.0	92.6	1.3	3.8	3.6	4.0	5.6	5.3	5.1	93	90	84	ESE 4	ESE 7	E 8	10	10	10	10.8	● n.
27	89.7	90.4	91.3	1.8	1.8	1.2	1.0	4.7	4.8	4.6	89	96	92	E 9	ENE 9	ENE 9	10•*	10•*	10*	4.0	* u. ● n, a, p.
28	94.1	98.0	99.0	-0.4	-0.4	0.0	0.4	3.9	4.4	4.4	87	96	92	ENE 7	ENE 5	ENE 4	10*	10	10*	10.5	* n, * sch. a, p.
M.	00.3	00.9	01.0	1.2	2.8	3.6	3.2	4.9	5.2	5.2	85	85	87	3.8	4.1	3.8	8.2	8.9	7.8	110.4	

$H = 8$ m, $H_b = 10.7$ m
$C_g = 1.15$ mb bei 984 mb

$\varphi = 58^0\ 4'$ N
$\lambda = 8^0\ 4'$ E

März.

Datum.	Luftdruck. 900 oder 1000 + 8	2	7	Luft-Temperatur. Min.	8	2	7	Absolute Feuchtigkeit. 8	2	7	Relative Feuchtigk. 8	2	7	Richtung und Stärke des Windes. 8	2	7	Bewölkung. 8	2	7	Niederschl.	Bemerkungen
1	05.6	09.0	11.5	-1.4	1.0	1.2	1.4	4.0	4.7	4.3	81	92	85	ENE 3	NE 3	ENE 3	10	10	10	3.1	● n.
2	16.8	19.3	22.8	0.0	0.8	2.6	2.0	4.1	4.4	4.4	85	79	82	NNW 1	ENE 1	NE 1	7	10	10		
3	28.4	29.0	27.3	-1.8	-0.8	2.0	2.0	2.8	3.2	4.4	65	60	82	NNE 1	S 1	WSW 2	6	3	7		
4	22.9	18.9	17.3	-1.8	2.2	5.8	4.8	4.8	5.0	3.6	89	73	56	WSW 2	W 2	NW 4	10	9	10		
5	14.6	04.8	94.7	2.2	2.2	5.8	7.0	3.9	6.1	5.3	72	88	71	WSW 1	WSW 4	W 5	8	10	8		
6	89.2	91.0	90.4	2.2	5.2	6.6	4.8	3.8	4.1	3.5	57	57	53	NW 5	NW 4	W 3	2	4	2		
7	89.2	88.0	88.3	1.8	6.8	5.2	3.2	5.5	3.6	4.0	74	54	69	WSW 1	WNW 1	W 1	1	2	3		
8	**87.9**	90.6	94.2	-2.0	-2.0	-1.2	-2.0	2.7	2.7	3.0	67	64	76	NE 4	NE 3	NNW 1	10	10	3		
9	98.5	01.6	05.3	-5.6	-5.6	-2.6	-1.8	2.2	2.3	2.5	73	61	63	NNE 2	ENE 3	N 2	4	8	2		
10	15.3	18.7	19.8	-5.7	-5.4	-0.8	-0.8	**1.3**	1.6	1.9	42	36	45	N 2	E 2	WNW 1	1	0	0		
11	22.9	23.2	24.8	-6.6	-6.6	-2.0	-3.8	1.5	2.1	1.5	54	53	43	NNW 1	ENE 4	ENE 4	2	7	4		
12	24.7	23.4	21.6	**-7.3**	-4.8	0.4	-0.4	1.4	**1.3**	1.5	44	30	34	NNW 2	N 3	NNW 2	1	0	1		
13	18.0	16.6	14.0	-5.3	-5.0	-3.2	-3.4	1.4	1.8	2.1	43	50	58	NNE 2	E 3	SE 1	2	4	4		
14	11.9	12.4	13.7	-6.0	-6.0	-3.8	-3.4	2.0	2.5	2.1	67	72	58	NE 2	ENE 4	ENE 3	9	10*	10		* p.
15	21.4	24.1	25.6	-7.0	-5.8	0.0	-0.8	2.2	3.3	3.2	73	71	74	NNW 2	SW 1	W 1	1	2	4	0.0	
16	**32.1**	31.3	26.5	-6.4	-1.4	-1.6	-1.2	3.1	3.5	3.8	75	85	90	ESE 4	ESE 3	ESE 3	10	10*	10*		* a, p.
17	21.5	25.2	26.7	-3.5	-2.0	1.8	1.0	3.0	3.1	3.8	76	59	77	NE 1	E 3	WSW 2	3	3	4	1.2	
18	26.4	25.3	23.8	-3.5	-1.0	6.4	3.8	3.1	5.7	4.4	73	79	73	WSW 1	WNW 3	WSW 3	3	8	3		
19	21.1	17.9	17.4	-1.0	3.0	**8.8**	6.0	4.5	6.0	3.5	79	71	50	WSW 3	W 3	W 3	9	8	10		
20	12.8	10.7	08.3	1.9	2.4	4.4	3.0	3.0	2.2	2.2	54	34	39	W 1	NW 4	WNW 1	1	1	3		
21	06.8	08.2	08.9	-1.2	-0.2	3.6	2.8	2.3	1.9	2.7	51	31	48	NNW 2	E 2	W 2	6	5	4		
22	14.2	16.3	15.9	-0.8	-0.8	2.6	2.2	2.1	2.5	2.9	49	44	54	NNW 2	ESE 2	WSW 1	0	1	2		
23	15.4	13.9	11.5	-3.7	-3.4	3.8	2.6	2.6	3.7	3.6	73	61	65	0	S 3	S 4	2	6	10		
24	03.4	04.4	04.6	-3.4	3.0	3.4	2.6	4.3	4.3	4.0	76	73	72	S 2	SW 1	SSE 3	10	10●	10	2.8	● n, a, p.
25	08.2	11.3	13.3	1.2	3.2	3.2	3.0	5.6	4.4	4.3	97	76	76	SE 2	SE 1	E 1	10	10●	10●	10.3	● n, a, p.
26	17.0	18.7	18.7	1.6	2.6	3.2	2.8	5.1	4.8	3.3	93	83	59	E 3	E 3	NE 2	10	8	3	3.6	● n.
27	19.1	17.5	15.5	-0.2	0.8	3.6	3.0	2.6	4.5	4.7	53	77	83	N 1	ESE 2	WSW 1	2	2	4		
28	08.9	09.8	11.1	0.2	2.0	3.8	1.8	4.4	4.6	2.4	82	77	45	N 4	NNE 4	NNW 4	8	2	2		
29	09.9	10.9	11.4	-1.4	-1.4	1.8	1.4	2.7	1.8	2.6	64	35	51	N 2	SE 1	S 1	3	2	4		
30	09.1	08.5	06.0	-1.4	3.6	5.4	4.6	5.7	**6.3**	5.9	97	94	94	SW 1	WSW 4	SW 4	10	10	10	0.2	● n.
31	00.8	04.1	05.2	3.0	5.0	6.0	4.4	**6.3**	5.9	5.8	97	85	93	WSW 4	WSW 4	WSW 1	10	6	10		
M.	12.7	13.1	12.8	-2.2	-0.4	2.5	1.7	3.4	3.7	3.5	70	65	65	2.1	2.6	2.3	5.5	5.8	5.7	21.2	

April.

Datum.	Luftdruck. 900 oder 1000 + 8	2	7	Luft-Temperatur. Min.	8	2	7	Absolute Feuchtigkeit. 8	2	7	Relative Feuchtigk. 8	2	7	Richtung und Stärke des Windes. 8	2	7	Bewölkung. 8	2	7	Niederschl.	Bemerkungen
1	98.3	99.2	05.5	2.8	4.8	5.2	4.2	6.2	4.4	4.0	97	66	65	SSW 4	WNW 5	NW 3	10●	2	2	↘4.7	● n, a.
2	06.8	04.7	02.0	1.7	4.2	5.2	5.0	5.6	6.2	6.1	90	94	94	SSW 4	SSW 4	SSW 4	10	10	10	1.3	
3	05.1	08.6	11.4	-0.4	1.6	3.0	2.4	3.8	**3.2**	3.6	74	56	65	W 3	WNW 4	WNW 2	2	2	1		
4	16.0	17.5	17.9	**-0.5**	2.0	4.8	4.2	4.4	4.8	5.2	82	74	84	W 2	WSW 4	SW 2	10	10	8		
5	18.9	19.0	18.0	2.0	3.6	4.4	3.8	4.5	5.0	5.0	77	80	83	SSE 1	E 3	ENE 4	1	10	8		
6	17.6	17.2	16.9	2.0	3.0	4.6	5.4	4.9	5.1	4.8	87	81	72	NE 4	ENE 5	ENE 4	3	2	2		
7	19.5	20.1	19.3	1.2	4.2	5.2	5.4	5.0	5.0	4.2	80	75	63	ENE 4	ENE 4	ENE 3	0	1	1		
8	21.1	21.1	19.7	3.3	4.8	6.2	6.2	4.2	4.4	3.4	65	62	48	ENE 2	E 5	ENE 2	1	1	1		
9	18.6	18.3	17.4	3.8	5.8	7.0	7.6	4.6	5.3	5.4	67	71	69	ENE 3	ENE 4	ENE 3	1	1	1		
10	19.6	21.5	22.3	5.1	6.6	7.0	9.0	5.4	5.8	5.8	74	77	68	ENE 4	ENE 5	ENE 3	2	2	1		
11	25.1	**25.2**	24.0	5.3	6.8	8.2	8.4	5.9	5.9	5.6	80	73	67	ENE 1	ENE 2	ENE 1	3	3	1		
12	20.6	19.4	17.3	3.0	6.0	6.6	8.6	5.3	6.6	5.9	76	91	70	N 1	E 5	ENE 2	1	3	1		
13	13.1	10.3	07.7	2.8	4.8	7.8	8.0	5.4	7.0	7.3	84	89	92	NNW 1	SE 1	E 1	8	8	10		
14	03.9	04.4	04.7	3.9	6.4	6.2	6.0	6.8	6.7	6.8	94	94	97	ENE 2	ENE 3	SW 1	10	10	10		
15	00.8	92.2	**87.1**	2.8	4.8	5.2	5.4	5.8	6.0	6.5	90	90	97	SSE 1	SE 5	SW 3	10	10●	10●		● a, p.
16	87.2	89.6	91.5	3.4	5.4	8.0	5.8	6.1	6.9	6.3	91	86	91	SSW 2	SW 2	SW 2	6	5	3	↘8.0	
17	95.1	97.5	98.9	1.8	3.6	**10.2**	8.2	5.1	5.1	6.1	87	55	75	W 1	WNW 3	WNW 3	2	7	8		
18	01.6	03.3	02.9	3.1	5.6	8.2	7.0	3.5	6.8	6.2	52	83	82	WNW 1	WSW 4	WSW 1	3	4	9		
19	06.8	10.4	11.1	2.2	5.2	9.2	7.4	4.4	5.9	6.6	66	68	86	N 2	SW 1	SW 1	1	2	1		
20	16.0	16.6	14.6	2.8	4.8	8.8	9.4	5.0	6.4	6.0	78	76	69	NNW 1	SSW 1	NW 3	1	1	8		
21	16.2	17.4	17.2	4.0	7.0	8.4	8.0	4.3	6.0	6.2	57	73	78	NNW 3	E 2	WSW 1	2	4	4		
22	16.7	14.3	11.3	1.9	5.4	8.4	6.4	6.1	6.9	6.6	91	84	91	SW 1	SW 4	SSW 3	8	9	10●		
23	98.4	98.8	99.3	4.7	6.2	7.6	6.2	6.7	**7.6**	6.7	94	98	94	SSW 5	SW 3	SW 2	10●	8	10	↖10.3	● n, a.
24	00.2	01.1	02.1	3.4	6.4	6.6	6.2	6.8	6.4	6.7	94	88	94	SSW 2	WSW 4	SW 2	8	9	8	4.0	
25	01.3	01.3	00.7	4.1	6.6	8.0	7.0	6.4	7.1	7.0	88	89	94	S 2	S 2	SSW 1	7	7	4		
26	03.5	05.7	06.4	3.7	6.2	7.6	7.4	6.5	6.9	6.8	91	89	89	ENE 2	E 2	E 1	7	5	3		
27	07.2	08.2	09.0	3.4	5.4	9.6	**10.2**	5.5	6.1	6.9	82	69	74	NNW 2	E 2	WSW 1	8	5	5		
28	09.8	09.9	10.1	3.0	7.8	8.6	8.4	5.7	5.7	7.5	72	68	92	ENE 1	E 1	SW 1	2	1	6		
29	13.4	13.9	13.3	4.5	6.0	8.8	7.6	6.4	6.6	6.5	91	78	83	NNW 1	NW 1	NW 1	9	6	6		
30	10.4	09.3	07.6	4.0	6.0	9.4	8.6	5.5	6.9	6.7	79	79	81	NW 1	WSW 2	SW 1	6	5	4		
M.	09.6	09.9	09.6	3.0	5.2	7.1	6.8	5.4	6.0	6.0	81	78	80	2.1	3.1	2.1	5.1	5.1	5.2	28.3	

$H = 8$ m, $H_b = 10.7$ m — $\varphi = 58^0\ 4'$ N

$C_g = 1.15$ mb bei 984 mb — $\lambda = 8^0\ 4'$ E

Mai.

Datum.	Luftdruck. 900 oder 1000 + 8	2	7	Luft-Temperatur. Min.	8	2	7	Absolute Feuchtigkeit. 8	2	7	Relative Feuchtigk. 8	2	7	Richtung und Stärke des Windes. 8	2	7	Bewölkung. 8	2	7	Niederschl.	Bemerkungen.
1	07.2	08.0	08.9	4.2	6.2	7.8	7.2	**5.0**	5.7	6.3	71	72	83	NE 3	ENE 3	ENE 3	6	5	8		
2	08.6	07.8	06.7	5.2	7.2	6.2	5.4	5.2	6.2	6.1	69	88	91	NE 3	N 4	N 3	10	10•	10•		◍ a, p.
3	07.8	10.0	12.5	5.1	7.8	8.6	7.6	6.6	5.9	5.6	83	70	72	W 3	WSW 5	WSW 4	7	2	1	9.8	◍ n.
4	16.0	17.0	16.4	**3.1**	6.4	9.4	8.8	5.7	7.9	7.5	79	89	89	0	SE 1	ENE 2	10	7	7		
5	16.2	16.0	14.9	6.3	8.8	10.2	10.4	6.2	7.6	6.9	73	82	74	ENE 4	ENE 4	ENE 4	10	10	7		
6	13.9	13.4	12.2	8.1	9.6	11.0	10.6	7.2	7.1	7.6	82	73	80	ENE 3	ENE 4	ENE 3	6	9	4		
7	09.0	06.6	05.9	8.0	8.0	8.2	8.4	7.1	7.4	8.0	89	92	98	NE 4	ENE 4	ENE 3	10	10•	10≡		◍ a, p.
8	09.1	10.1	09.7	7.7	8.2	7.8	8.4	7.7	7.5	7.8	94	94	94	ENE 3	ENE 4	ENE 4	10	10•	10	2.0	◍ a, p.
9	09.0	10.3	10.0	7.5	8.0	8.6	8.4	7.8	8.1	8.0	98	98	98	ENE 4	E 4	SSW 2	10•	10•	6	18.9	◍ n, a, p.
10	15.0	16.4	15.8	7.2	9.2	10.2	9.8	8.0	8.6	8.3	92	93	92	ESE 1	E 2	E 1	10	6	10	4.1	
11	11.1	08.4	09.6	8.0	10.0	9.2	8.8	7.7	8.2	7.8	84	95	92	ENE 3	ENE 3	WSW 3	10	10•	4		◍ a, p.
12	12.0	15.1	16.8	8.3	8.8	10.4	10.2	8.2	9.2	8.8	98	98	95	SSW 3	SW 2	SW 2	10≡	7≡	4	8.5	◍ n, a.
13	18.2	18.6	19.8	8.6	8.6	9.8	10.8	8.1	8.6	8.9	98	95	93	S 3	SW 3	WSW 2	10	10	5	1.0	
14	21.2	21.9	20.7	5.0	7.0	11.8	11.2	6.8	9.1	9.2	91	88	93	NNW 1	SW 2	SW 2	4	10	2		
15	22.5	21.3	19.3	6.9	10.4	11.0	11.0	6.7	7.8	7.4	72	80	75	E 2	E 2	E 1	3	3	1		
16	17.2	16.3	15.5	7.0	12.0	13.0	12.0	6.5	9.3	9.2	63	85	89	ENE 2	ENE 3	ENE 3	2	8	8		
17	18.6	19.4	19.8	10.7	12.4	14.5	14.0	8.5	7.1	6.7	79	57	57	ENE 3	ENE 3	ENE 3	2	1	1		
18	22.3	22.8	21.9	8.8	12.8	13.0	14.0	8.4	7.1	6.5	77	73	55	ENE 4	ENE 4	ENE 3	1	1	1		
19	**24.3**	23.6	21.4	10.7	12.4	12.8	13.2	8.0	8.4	9.2	74	77	82	E 3	E 3	ENE 1	2	1	1		
20	18.1	15.3	10.1	7.8	11.8	**15.0**	13.8	8.6	9.4	8.9	84	74	76	0	SW 2	WSW 3	1	2	4		
21	06.5	08.5	08.0	9.6	12.6	11.0	12.0	8.1	6.2	7.0	75	63	67	ENE 4	E 5	E 1	8	6	4		
22	05.4	03.0	01.2	6.3	10.8	11.8	12.0	7.5	7.8	7.2	77	76	69	WSW 2	WSW 5	WSW 3	3	3	3		
23	03.5	05.4	05.4	7.5	12.0	13.0	13.0	7.2	8.8	9.6	69	80	87	N 1	SE 1	SW 1	2	6	3		
24	06.5	06.6	05.8	8.8	10.8	12.2	10.4	8.2	8.8	7.7	85	84	82	ENE 4	ENE 4	ENE 5	10	10	10		
25	07.1	08.7	08.5	8.2	8.2	7.4	8.4	7.7	7.2	7.5	94	94	92	NE 3	NE 3	NNE 2	10•	10•	10	6.6	◍ n, a, p.
26	08.6	09.3	08.8	6.3	11.8	12.2	11.4	8.3	9.1	7.4	81	87	73	0	S 1	SE 1	6	8	10	8.6	
27	05.8	03.0	00.6	10.8	10.8	12.2	12.2	8.7	10.1	9.8	90	96	94	E 3	E 3	ESE 1	10	10	10•		
28	96.4	**96.1**	97.4	10.7	12.2	12.4	12.0	10.1	**10.5**	10.2	96	98	98	SE 3	SSE 2	S 2	10•	10•	10•	22.0	◍ n, a, p.
29	02.3	03.6	04.8	7.9	10.4	13.6	12.2	8.9	**10.5**	9.6	95	92	91	NNE 1	S 1	SW 3	10	8	6	15.0	
30	03.5	03.4	05.0	10.4	11.0	13.0	12.0	9.0	10.1	9.2	93	91	89	S 4	SW 4	SW 3	10•	7	9		
31	06.5	09.1	11.1	9.6	11.6	11.4	10.4	8.7	8.1	8.2	86	81	88	WSW 4	WSW 5	WSW 4	7	7	6	3.0	
M.	11.3	11.5	11.1	7.8	9.9	10.9	10.6	7.6	8.2	8.0	84	84	84	2.6	3.1	2.5	7.1	7.0	6.0	90.4	

Juni.

Datum.	8	2	7	Min.	8	2	7	8	2	7	8	2	7	8	2	7	8	2	7	Niederschl.	Bemerkungen.
1	14.9	16.0	15.8	7.9	11.4	12.8	11.4	9.3	9.5	9.3	93	87	93	SW 2	WSW 3	SW 2	6	6	7		
2	17.3	17.4	17.2	7.9	11.4	12.6	11.0	9.3	8.6	8.1	93	80	83	SW 2	WSW 2	SW 3	6	4	4	2.5	◍ n.
3	17.7	16.7	17.1	7.8	11.8	11.2	11.8	9.3	8.9	7.4	91	90	72	SW 2	WSW 4	W 4	6	8	10		◍ a.
4	19.4	21.3	21.7	7.4	12.6	14.0	13.0	9.8	10.3	9.8	91	87	89	WSW 1	WSW 2	SW 1	2	4	2	2.0	
5	23.4	23.5	21.8	9.0	14.0	15.0	13.6	10.3	10.8	10.5	87	85	92	SW 1	SW 2	SW 3	3	10	7		
6	23.3	23.3	22.4	10.1	11.6	13.6	12.6	9.9	10.0	10.3	98	87	96	SW 1	E 2	E 1	10≡	3	10≡		
7	24.4	25.4	24.9	10.5	16.0	17.0	16.0	11.0	11.5	11.5	81	80	85	ESE 1	S 1	SW 1	7	10	8		
8	26.3	25.9	24.8	12.0	16.0	17.6	16.4	12.1	12.6	12.4	89	84	89	SW 1	SW 3	WSW 2	7	5	4		
9	**27.0**	26.9	24.8	13.5	20.2	18.6	17.8	11.6	12.2	13.0	66	77	86	ENE 2	ESE 1	SW 2	2	1	1		
10	24.0	23.8	21.3	13.7	23.2	22.6	18.2	12.5	**14.1**	13.4	59	69	86	ENE 2	WSW 1	WSW 2	0	1	2		
11	19.3	16.6	15.8	15.2	21.2	**25.8**	22.2	12.2	9.0	8.9	65	37	45	NNW 1	W 4	NW 4	2	2	6		
12	16.3	13.5	13.0	12.5	15.0	17.8	15.0	5.7	5.9	6.1	45	39	49	NW 4	W 4	WNW 4	1	3	5		
13	11.1	07.3	02.7	10.0	12.0	13.8	12.6	8.2	8.1	8.3	79	69	77	WSW 4	WNW 6	W 4	8	8	10		◍ sch. a.
14	97.9	98.9	01.5	9.0	13.0	15.4	14.0	5.7	6.1	6.7	51	47	57	NNW 4	NW 4	NW 5	4	2	1	0.5	
15	07.9	06.1	07.1	8.6	13.6	16.4	11.4	7.0	7.8	8.8	60	56	88	NNW 1	WSW 4	WSW 4	1	5	4		
16	04.2	00.8	99.8	9.1	11.6	13.8	13.0	9.2	9.4	8.3	91	80	75	WSW 3	SW 4	W 4	7	8	9		
17	98.4	99.7	00.7	9.6	10.6	13.0	11.0	5.8	**5.5**	5.8	61	49	59	WNW 4	NW 8	WNW 6	6	4	3		
18	**94.2**	94.3	97.1	**4.0**	11.0	14.0	13.0	6.0	8.5	9.6	61	71	87	NNW 3	S 2	WSW 1	2	7	9		
19	06.5	07.0	05.1	10.8	12.0	14.6	13.8	8.9	10.2	9.4	86	83	80	WSW 1	SSW 2	SW 3	10	6	6		
20	02.0	01.2	98.9	10.1	14.6	14.6	13.0	9.4	9.1	9.8	76	74	89	WNW 1	ESE 2	E 1	10	8	8		
21	94.8	99.6	02.2	9.9	12.4	11.2	9.8	8.9	7.5	8.1	85	75	89	NW 1	E 4	NNE 2	9	10	10•		
22	07.8	09.7	09.8	8.7	12.2	15.2	14.4	8.8	9.3	10.8	84	72	90	NE 5	ENE 4	NE 1	9	7	9	10.2	◍ n, p.
23	11.0	11.8	11.6	10.8	12.8	14.8	15.2	9.0	11.1	10.6	82	89	83	NE 3	ENE 3	NE 2	10•	10	8	3.0	◍ n.
24	11.0	10.5	08.3	11.6	15.6	17.0	15.6	10.9	11.8	12.3	83	82	93	NE 1	E 2	S 1	10	5	5	0.5	◍ n, p
25	07.0	06.4	03.7	12.6	15.6	15.8	15.0	8.0	9.7	10.5	60	73	83	E 3	SSE 1	SW 2	6	4	4	4.0	
26	99.4	01.5	01.9	11.2	14.2	13.0	13.4	9.1	9.6	9.9	76	87	87	NE 3	NE 4	E 1	8	10	6		
27	07.3	10.6	12.1	11.8	13.8	15.4	16.0	9.9	10.5	12.1	85	81	89	ENE 3	ENE 1	SW 1	10	2	6		
28	14.8	15.6	15.3	11.9	16.6	16.0	15.0	12.9	11.5	11.3	92	85	89	SW 2	SW 3	SW 3	3	2	2		
29	16.4	17.9	18.2	11.4	15.4	16.2	15.6	12.2	11.7	12.3	93	85	93	SW 1	S 1	WSW 2	1	1	2		
30	20.6	21.3	20.5	11.3	13.0	16.0	15.2	9.8	11.5	11.5	89	85	89	E 1	SW 1	WSW 2	9	1	1		
M.	12.2	12.4	11.9	10.3	14.1	15.5	14.2	9.4	9.7	9.9	78	75	82	2.2	2.8	2.5	5.8	5.2	5.6	22.7	

$H = 8$ m, $H_b = 10.7$ m
$C_\varphi = 1.15$ mb bei 984 mb

$\varphi = 58^0\ 4'$ N
$\lambda = 8^0\ 4'$ E

Juli.

Datum.	Luftdruck. 900 oder 1000 + 8	2	7	Luft-Temperatur. Min.	8	2	7	Absolute Feuchtigkeit. 8	2	7	Relative Feuchtigk. 8	2	7	Richtung und Stärke des Windes. 8	2	7	Bewölkung. 8	2	7	Niederschl.	Bemerkungen.
1	20.8	20.7	18.7	11.2	17.2	18.8	21.0	11.9	13.0	12.0	82	81	65	NNW 1	ENE 2	ENE 1	3	7	3		
2	18.7	17.5	15.4	16.2	18.2	18.0	19.4	12.2	10.3	10.6	78	67	63	E 3	ENE 5	ENE 3	4	8	6		
3	15.3	14.4	12.9	16.8	17.8	19.4	19.0	10.4	10.0	11.4	68	60	70	ENE 4	ENE 4	ENE 3	3	1	7		
4	12.8	12.3	12.2	15.4	16.0	17.4	17.4	10.7	11.5	12.7	79	78	86	ENE 3	E 3	ENE 1	10	2	7		
5	12.3	11.4	09.6	15.4	18.4	19.4	20.4	13.6	14.8	13.9	86	89	78	ENE 1	ESE 1	WSW 2	10	2	1		
6	06.8	06.3	07.0	16.5	19.0	18.2	16.8	13.5	13.1	12.5	83	84	88	WSW 2	WSW 6	WSW 4	2	2	2		
7	09.4	09.5	08.3	14.9	16.2	18.0	16.6	11.7	13.2	13.2	85	86	94	WSW 3	SW 2	SSW 1	3	10	10		
8	05.8	06.6	06.9	15.3	16.0	16.4	18.8	12.7	9.6	9.0	93	69	56	WSW 1	NW 5	WSW 3	10	10	5	6.0	● n.
9	08.0	07.2	07.6	12.1	15.6	18.2	16.6	8.0	8.5	**7.9**	60	55	56	NW 4	W 4	WNW 4	2	1	1		
10	07.7	07.1	06.6	**11.0**	16.0	14.0	13.0	8.5	9.2	10.1	63	78	91	W 3	WSW 4	SW 4	2	3	10		
11	11.0	12.7	14.1	11.7	16.4	17.6	18.0	9.4	12.0	11.7	68	80	76	NNW 1	ESE 1	SE 1	1	7	2		
12	18.8	20.3	20.8	12.6	17.6	19.6	17.0	11.1	12.8	13.0	74	76	90	0	SW 2	SW 2	2	2	3		
13	23.5	24.7	23.6	13.5	17.0	18.0	18.0	12.3	13.2	13.2	86	86	86	E 2	S 1	SE 1	4	8	2		
14	23.0	22.5	21.3	13.8	15.8	20.0	19.4	12.5	13.5	12.9	93	78	77	NE 1	SSW 2	SW 3	10	4	2		
15	21.0	21.0	19.6	14.5	18.0	20.8	20.4	12.0	12.4	12.3	78	68	69	WSW 1	SSW 1	SSW 1	1	2	2		
16	17.7	16.6	14.9	15.0	20.0	22.0	21.4	11.7	13.2	12.7	67	67	67	NE 1	SSE 1	SW 1	3	3	1		
17	13.7	12.4	10.1	16.4	21.4	20.8	20.4	14.5	13.6	14.2	77	75	80	SE 1	ENE 2	ENE 3	7	5	7		
18	10.5	12.0	11.4	17.4	19.4	20.0	20.6	14.5	14.8	13.8	87	85	76	E 3	E 4	ENE 3	8	8	5		
19	13.6	15.5	15.9	19.4	20.6	21.8	21.8	13.8	15.0	14.6	76	77	75	ENE 3	E 4	ENE 2	10	2	1		
20	20.3	20.8	20.3	17.2	21.2	23.6	25.0	14.0	14.8	16.4	75	69	70	NNW 1	SSE 1	SSW 1	2	1	0		
21	23.3	23.8	23.3	17.2	21.2	25.0	**25.8**	15.0	16.0	15.5	80	68	63	NW 1	SE 1	0	1	1	0		
22	**24.9**	24.2	22.3	17.6	22.8	25.4	**25.8**	13.4	17.6	18.1	65	73	73	0	S 1	0	1	1	1		
23	20.7	19.8	18.4	18.0	24.0	25.4	24.6	16.6	18.3	**18.8**	75	76	82	N 1	ESE 1	ENE 1	2	3	3		
24	18.0	17.5	15.6	18.2	23.4	24.6	24.2	17.0	16.3	16.5	80	71	74	E 1	SE 1	ENE 1	3	3	5		
25	13.8	12.2	09.9	17.1	23.6	23.6	24.6	16.2	17.9	13.6	75	83	59	E 1	ENE 3	ENE 3	2	2	2		
26	06.1	04.1	01.8	20.0	22.0	22.4	21.4	14.5	14.3	14.5	74	71	77	ENE 4	E 5	ESE 6	10	10	10	3.0	● u, ⊼ n.
27	02.1	01.8	02.7	18.8	19.8	21.2	19.0	14.9	15.3	12.0	87	82	74	SE 1	WSW 3	SW 4	10	9	7	2.5	● n, a.
28	01.3	00.7	00.9	15.5	18.0	16.0	16.8	11.4	11.0	10.8	75	81	76	SE 3	SE 3	E 3	10	9	7	2.0	● sch. u. ⊼ a.
29	97.9	99.6	00.6	13.8	13.8	17.8	16.6	9.4	11.6	11.4	80	76	81	NNW 3	0	WSW 3	10●	5	6	15.2	● n, a, p.
30	99.5	98.5	98.2	13.2	16.2	19.0	18.2	12.0	11.7	11.3	87	72	73	SSW 1	SW 4	WSW 4	7	6	5	13.9	● n.
31	97.8	98.2	**96.6**	14.5	17.0	17.0	17.0	11.5	13.0	11.8	80	90	82	WNW 1	SW 1	SW 3	6	7	7		● a, p.
M.	12.8	12.6	11.7 ~~12.7~~	15.5	18.7	20.0	19.8	12.6	13.3	13.0	78	76	75	1.8	2.5	2.3	5.1	4.6	4.2	42.6	

August.

Datum.	Luftdruck. 900 oder 1000 + 8	2	7	Luft-Temperatur. Min.	8	2	7	Absolute Feuchtigkeit. 8	2	7	Relative Feuchtigk. 8	2	7	Richtung und Stärke des Windes. 8	2	7	Bewölkung. 8	2	7	Niederschl.	Bemerkungen.
1	96.4	**96.1**	97.9	14.7	16.2	17.8	16.4	10.8	8.5	9.6	79	57	69	W 3	WSW 5	WSW 5	7	5	5	5.9	
2	96.7	97.7	99.0	12.6	16.6	17.8	16.2	12.6	11.9	11.1	90	78	81	SW 3	SSW 3	SSW 1	8	6	6		
3	03.2	04.0	04.2	12.9	16.4	17.8	18.6	11.6	10.7	11.7	83	70	73	W 1	WSW 5	WSW 4	5	5	3		
4	04.6	03.0	01.8	11.6	17.6	19.0	18.4	10.8	12.3	12.1	72	75	77	WNW 2	SW 5	WSW 3	1	2	1		
5	00.3	99.8	99.4	14.0	18.0	**20.8**	20.2	9.8	10.9	12.5	63	60	71	NW 1	SW 1	SW 1	1	2	1		
6	02.2	03.3	05.4	14.5	18.0	20.0	19.6	10.0	11.7	10.2	65	67	60	WNW 1	WSW 4	W 4	1	1	2		
7	10.6	12.0	12.2	14.8	17.8	19.0	16.8	11.6	11.4	11.6	76	70	81	WSW 2	WSW 4	WSW 4	6	5	4		
8	14.0	15.1	15.3	13.6	16.6	18.4	17.2	9.0	13.0	13.1	64	82	90	WSW 2	SW 4	WSW 3	4	7	9		
9	16.3	15.4	12.5	14.1	17.4	18.0	17.0	13.6	13.5	13.5	92	88	94	0	SE 1	E 2	8	10	10●		● p.
10	08.9	09.0	08.1	15.8	16.8	19.8	18.0	13.9	**15.2**	13.5	98	89	88	WSW 1	SW 3	SW 3	10	8	10	9.2	● n.
11	05.1	06.5	08.7	15.1	16.6	18.4	17.8	12.0	13.3	11.3	85	84	74	WSW 1	SSW 4	W 3	6	6	3		● a.
12	16.8	**18.3**	18.0	13.6	15.6	18.8	17.0	9.8	10.7	12.1	75	66	84	W 1	SW 2	S 1	1	3	8	1.7	
13	16.8	17.2	17.3	14.9	15.4	16.4	16.4	12.5	13.6	13.3	96	98	96	S 3	SW 3	SW 2	10●	10	10	2.0	● n, a.
14	17.7	16.9	16.2	14.7	16.2	17.6	15.5	10.8	9.2	8.1	79	61	61	WSW 3	WNW 4	WNW 4	2	1	2	11.5	
15	16.4	14.4	13.0	11.4	14.4	18.0	18.0	8.2	9.5	9.5	67	62	62	NNW 2	W 2	NW 3	6	8	6		
16	14.1	12.9	10.4	11.8	14.2	18.2	18.6	8.1	11.0	10.5	67	71	66	NNW 1	SSE 1	WNW 3	0	1	4		
17	07.3	04.7	04.2	13.8	16.0	17.4	15.8	10.4	11.2	11.9	77	76	89	W 1	WSW 3	NNE 1	8	10	10		
18	02.8	01.4	00.5	12.8	15.0	20.2	19.0	9.2	12.8	11.4	72	73	70	NW 1	SW 2	WSW 2	2	9	7		
19	05.9	07.6	07.4	12.6	16.6	18.2	18.0	10.1	11.9	12.6	71	76	82	ENE 3	ESE 1	SSE 1	8	5	5		
20	07.4	07.2	06.3	14.6	15.6	18.0	16.0	10.7	10.3	10.1	81	67	75	WSW 2	SW 3	WSW 3	3	1	2		
21	07.7	07.6	07.8	12.6	14.6	17.2	15.8	9.4	10.5	10.0	76	72	75	W 1	S 1	WSW 1	9	3	8		
22	09.8	11.4	11.4	13.5	16.0	17.0	17.0	10.1	10.9	11.2	75	76	78	ENE 1	ESE 1	ENE 3	7	4	10		
23	10.3	11.3	10.6	16.0	17.0	17.8	18.6	13.0	12.7	13.4	90	84	84	E 5	ENE 5	E 4	10	10	10	0.2	● sch. n.
24	10.4	09.5	07.8	16.1	16.6	17.0	18.0	12.3	12.6	12.6	87	88	82	E 5	ENE 5	ENE 4	10	10●	10		
25	07.0	08.2	09.4	16.4	16.4	16.6	16.4	12.4	12.9	12.7	89	92	92	ENE 4	E 4	ENE 4	10	10	10	1.5	● n, a, p.
26	14.0	14.7	15.0	15.8	15.8	16.8	16.8	11.4	9.9	10.2	85	69	72	ENE 4	ENE 4	NE 3	10	4	4	14.2	● n.
27	15.3	14.0	11.4	14.5	17.0	16.8	15.4	11.8	11.3	11.3	82	79	87	ESE 3	ESE 3	SE 2	8	10	10●		● p.
28	10.9	11.3	12.6	11.6	13.6	18.4	16.6	10.0	10.1	10.3	87	63	73	WNW 2	WNW 2	W 3	3	4	2	15.5	● n.
29	06.0	05.7	05.5	12.6	15.6	16.4	14.6	12.9	9.1	8.1	98	66	65	SSW 4	WNW 4	WSW 4	10●	5	5	0.0	
30	06.9	09.9	10.4	12.5	14.0	16.2	14.8	8.7	8.7	**7.7**	74	63	62	W 3	WNW 6	WNW 6	1	8	8		
31	12.7	08.4	05.1	**7.2**	12.2	14.4	14.6	8.1	11.7	10.2	76	96	83	W 2	WSW 3	W 3	7	10●	7		● sch. a
M.	08.9	08.9	08.5	13.6	16.0	17.9	17.1	10.8	11.4	11.2	80	75	77	2.2	3.2	2.9	5.9	5.9	6.2	61.7	

$H = 8$ m, $H_b = 10.7$ m
$C_g = 1.15$ mb bei 984 mb

$\varphi = 58^0\ 4'$ N
$\lambda = 8^0\ 4'$ E

September.

Datum.	Luftdruck. 900 oder 1000 + 8	2	7	Luft-Temperatur. Min.	8	2	7	Absolute Feuchtigkeit. 8	2	7	Relative Feuchtigk. 8	2	7	Richtung und Stärke des Windes. 8	2	7	Bewölkung. 8	2	7	Niederschl.	Bemerkungen.
1	00.1	99.0	98.8	10.9	12.4	14.4	12.4	7.7	8.0	8.2	72	65	77	W 4	WNW 5	W 4	4	6	8	0.6	
2	94.9	94.7	93.9	10.5	11.0	13.8	11.6	7.6	7.8	7.2	77	67	71	W 4	WNW 5	W 5	1	4	1		
3	91.0	**89.1**	90.1	8.0	10.0	16.0	13.4	7.1	7.8	8.1	79	57	71	W 3	WNW 2	WNW 2	6	4	3		
4	92.4	92.9	92.6	9.8	11.2	14.6	11.4	**6.3**	7.4	7.4	63	59	73	NW 4	WNW 5	W 4	4	3	9		
5	89.9	90.7	91.6	9.8	12.8	16.0	13.2	8.0	8.8	9.0	73	64	80	WNW 2	WNW 4	W 3	7	7	8		
6	95.9	95.1	95.9	9.8	10.8	**17.0**	13.8	7.7	6.9	8.1	81	48	69	NNW 1	NW 2	WNW 2	1	6	5		
7	98.3	99.0	00.1	10.6	12.8	16.8	14.2	8.2	9.4	9.9	75	66	83	NW 1	NE 1	NE 1	4	4	6		
8	03.0	03.9	03.3	10.2	11.2	15.2	14.0	8.2	9.6	9.2	83	74	78	NNW 1	S 1	WSW 2	8	8	5		
9	03.9	05.1	05.3	8.8	9.8	15.0	12.6	8.1	9.7	8.8	89	76	82	NNW 1	SW 1	SE 1	7	5	5		
10	04.6	05.5	05.7	9.0	12.0	14.0	13.4	9.2	9.5	8.8	89	80	77	NE 4	ENE 5	NE 4	8	7	4	5.0	● n, a.
11	09.1	11.1	12.5	10.2	11.2	12.8	12.8	8.4	8.7	8.2	85	80	75	NNE 3	NE 4	N 1	8	7	3	1.7	● sch. a.
12	16.9	18.2	18.1	8.3	9.8	14.0	13.8	6.7	8.0	9.6	74	67	82	NNW 2	E 1	SW 1	1	1	1	1.0	
13	21.8	23.4	22.5	8.6	8.6	14.8	14.4	7.7	9.5	8.5	92	76	70	NNW 2	SSW 1	WSW 1	0	2	3		
14	24.1	23.8	22.7	6.6	10.6	14.2	13.8	7.8	9.6	9.6	83	80	82	W 1	WSW 3	WSW 3	3	7	9		
15	22.9	22.6	21.4	10.4	13.4	15.6	14.4	10.9	**12.0**	11.4	96	91	94	WSW 1	WSW 3	WSW 3	10	9	10		
16	19.2	18.4	17.0	12.8	14.0	15.2	13.4	10.6	10.4	10.4	90	81	91	WSW 2	SW 3	SW 1	10	8	4		
17	14.7	14.1	13.1	9.2	11.2	15.0	14.2	9.7	9.9	9.4	98	78	78	NE 1	E 3	E 3	7	6	10		
18	11.9	11.0	09.6	10.8	13.6	13.8	13.4	9.7	10.2	10.4	85	87	91	ESE 2	ESE 2	SSE 1	9	10●	10●		● sch. a, p.
19	09.0	08.9	06.7	11.7	12.2	14.8	13.0	9.8	9.5	9.1	94	76	82	WSW 1	SW 1	E 3	9	3	10	1.3	● n.
20	94.6	98.6	02.7	8.6	13.6	13.4	13.0	9.7	9.4	8.6	85	82	77	S 5	SW 5	SW 4	10	8●	7	3.0	● n, a, p.
21	96.4	90.0	93.5	11.0	13.0	12.4	10.2	10.4	10.2	7.8	94	95	84	SSE 4	S 4	W 3	10●	10●	10	6.4	● n, a, p.
22	97.8	99.8	98.9	10.2	11.4	14.0	12.6	8.3	9.8	8.8	83	82	82	WSW 3	SW 4	SSE 3	7	10	10	10.9	● sch. n, ● p.
23	85.4	86.0	90.1	9.0	14.0	14.0	12.6	10.3	9.8	8.8	87	82	82	SSW 4	SW 5	SW 5	6	7	10	16.2	● n, a.
24	98.6	02.2	04.5	11.7	12.2	13.4	11.8	9.1	8.3	8.6	87	73	84	SW 3	SW 3	WSW 2	5	5	5	1.5	
25	08.8	09.6	09.0	**6.3**	6.8	12.6	11.4	7.2	8.8	7.8	98	82	78	WNW 1	WSW 3	SW 1	6	6	4		
26	08.4	07.6	07.2	6.8	8.4	12.8	11.0	7.8	9.0	8.6	94	82	87	NW 1	SE 1	SSE 1	7	8	10●	4.0	● n.
27	09.3	11.8	13.7	8.4	9.4	11.4	10.8	7.9	8.6	8.9	89	86	93	N 2	E 2	0	10	4	3	0.5	● n.
28	18.1	20.2	20.3	6.5	7.0	12.4	11.2	7.0	8.2	8.4	94	77	85	NNW 2	E 1	SW 1	2	1	4		
29	15.5	13.8	14.5	6.9	12.4	13.6	13.2	10.0	11.1	10.8	94	96	96	SW 3	SW 4	WSW 3	10●	10●	10●	1.5	● n, a, p.
30	21.0	22.7	**23.8**	8.4	8.4	13.0	12.0	7.1	7.3	8.0	87	66	76	NW 1	SW 1	WSW 1	2	1	1	2.5	
M.	05.9	06.3	06.7	9.3	11.2	14.2	12.8	8.5	9.1	8.9	86	76	81	2.3	2.8	2.3	6.1	5.9	6.3	56.1	

Oktober.

Datum.	8	2	7	Min.	8	2	7	8	2	7	8	2	7	8	2	7	8	2	7	Niederschl.	Bemerkungen.
1	**26.3**	26.2	26.2	8.0	11.0	13.6	12.8	8.8	9.2	9.7	90	80	89	WSW 3	W 6	WSW 3	1	5	4		
2	21.9	19.0	20.0	6.8	11.8	**15.2**	13.0	9.1	9.3	9.6	88	72	87	WSW 4	W 4	WSW 3	7	5	1		
3	10.1	07.1	10.0	11.8	12.8	14.2	11.2	9.7	**9.9**	7.5	89	83	75	WSW 4	W 4	WSW 3	10	6	1		
4	19.0	21.1	20.9	6.0	6.6	10.6	9.0	5.4	5.3	5.6	74	56	66	W 2	WNW 3	W 3	3	2	8		
5	16.2	17.3	20.0	6.6	11.0	14.4	11.0	7.8	6.7	5.5	80	55	56	WSW 2	NW 3	WNW 1	8	1	1		
6	14.6	08.6	05.7	5.7	9.2	15.0	13.4	8.4	9.4	8.1	98	74	71	WSW 2	WSW 4	W 5	10	1	7		
7	10.8	13.3	15.5	7.3	8.0	11.4	9.0	5.4	5.5	5.8	67	55	68	WNW 3	NW 4	NW 2	1	1	0		
8	22.5	24.3	24.5	5.0	5.0	10.0	9.0	5.1	6.4	6.3	78	69	73	NNW 2	SW 1	W 1	3	3	4		
9	19.9	16.8	16.5	3.4	10.4	13.4	11.4	6.1	7.6	7.1	65	66	71	WSW 4	WNW 4	WNW 4	8	5	5		
10	13.2	11.9	12.0	10.2	11.2	13.8	10.0	8.4	7.6	5.2	85	65	57	WSW 4	WNW 4	W 4	6	8	9		
11	15.1	12.9	10.4	4.9	5.4	8.0	6.4	3.5	4.3	4.3	52	55	59	NW 1	WNW 4	NW 4	1	1	8		
12	05.0	04.7	04.2	3.4	3.4	7.4	6.0	4.5	4.7	3.5	76	61	50	NNW 2	SSW 1	NW 3	1	1	1		
13	97.3	93.1	90.8	2.0	3.0	7.0	4.8	4.3	4.3	3.6	76	57	56	NW 1	WSW 1	NW 1	2	6	5		
14	94.5	97.2	99.5	0.2	2.2	4.8	3.6	3.3	3.8	3.4	60	59	57	NNE 4	NW 4	NNW 4	6	6	1		
15	06.8	06.5	06.0	0.5	1.0	6.2	5.0	3.4	3.6	4.5	69	50	69	NNW 1	WSW 1	WNW 2	1	1	6		
16	07.9	07.5	09.2	-0.5	2.0	8.0	5.4	4.2	4.3	4.2	78	55	63	NNW 1	NW 4	NW 4	2	1	1		
17	09.4	07.3	03.3	-0.8	2.2	4.8	5.4	4.2	4.8	4.6	79	74	69	NW 1	ESE 1	E 3	8	10	10		
18	03.7	07.6	10.4	2.0	4.0	2.6	2.0	5.1	4.4	3.8	84	79	71	ENE 5	NE 4	N 3	10●	10	3	3.5	● n.
19	14.5	15.6	17.2	**-2.4**	**-2.4**	3.4	2.6	2.9	3.9	4.4	75	66	79	NNW 2	WSW 1	W 1	1	1	0		
20	18.2	16.6	13.6	**-2.4**	-0.6	5.6	5.8	**2.5**	5.5	5.2	57	82	76	NNW 2	N 1	S 3	4	6	7		● sch. p.
21	04.0	03.0	02.2	-1.3	5.2	6.4	6.6	5.0	6.1	6.4	75	86	88	ESE 3	E 4	E 5	10	10	10●	0.3	● p.
22	94.3	92.3	90.6	5.2	6.2	4.8	4.4	6.9	6.0	6.0	97	94	97	NE 5	NE 4	NNE 4	10●	10	10●	20.0	● n, a, p.
23	83.3	**81.5**	83.3	4.0	6.0	10.6	10.8	6.8	9.3	8.4	97	98	89	NE 7	SE 4	SSE 3	10●	10	10	13.8	● n, a.
24	83.9	85.2	85.0	6.0	9.6	10.0	9.8	8.4	8.4	8.6	95	92	95	SE 4	SE 3	SE 4	10●	10●	10●	17.0	● n, a, p.
25	91.2	95.0	97.9	8.8	9.8	10.6	9.4	8.3	8.8	8.1	92	93	92	SSW 2	SSW 1	S 1	7	7	5	10.1	● n,
26	02.5	04.2	03.9	8.8	9.8	10.2	10.2	8.6	8.8	8.8	95	95	95	SSW 2	SSW 1	SSE 2	7	10	10	2.0	● n.
27	97.9	97.4	96.9	9.3	10.8	10.8	10.8	9.4	9.2	8.9	98	95	93	S 4	SSE 3	S 4	10	10●	8	8.3	● n, a. p.
28	96.6	01.8	06.4	8.6	10.6	10.8	9.0	8.8	8.9	7.4	93	93	87	SW 7	WSW 5	WSW 3	10	10	7	11.3	● n.
29	08.0	04.5	05.6	7.0	10.0	10.8	10.4	8.2	9.4	9.2	89	98	98	SSE 3	S 4	SW 3	10●	10●	10●	1.5	● n, a, p.
30	10.7	13.0	14.3	8.4	8.4	10.6	9.0	8.0	9.3	8.1	98	98	95	0	SW 1	0	10=	10=	10=	12.6	● n.
31	17.6	20.2	22.0	7.3	8.8	8.6	8.8	8.2	7.7	7.8	98	92	92	ENE 3	ENE 5	ENE 4	10	10	10●		● p.
M.	07.6	07.5	07.9	4.8	6.9	9.5	8.3	6.4	6.9	6.4	82	76	77	2.9	3.0	2.9	6.4	6.0	5.9	100.4	

$H = 8\,m$, $H_b = 10.7\,m$ — $\varphi = 58^0\ 4'\ N$

$C_g = 1.15\,mb$ bei $984\,mb$ — $\lambda = 8^0\ 4'\ E$

November.

Datum.	Luftdruck. 900 oder 1000 + 8	2	7	Luft-Temperatur. Min.	8	2	7	Absolute Feuchtigkeit. 8	2	7	Relative Feuchtigk. 8	2	7	Richtung und Stärke des Windes. 8	2	7	Bewölkung. 8	2	7	Niederschl.	Bemerkungen.
1	23.1	23.5	23.9	8.2	8.2	7.8	7.2	7.4	7.5	7.1	92	94	94	ESE 4	E 5	ESE 4	10	10•	10•	12.6	◎ n, a, p.
2	20.9	18.0	16.8	5.8	6.8	7.0	6.6	6.5	6.0	6.9	88	79	94	E 5	ESE 5	ESE 4	10•	10	10•	30.8	◎ n, a, p.
3	09.8	07.7	02.6	5.7	7.2	5.8	5.0	6.9	6.7	6.3	91	97	97	E 3	NNE 3	ENE 4	10	10	10•	20.0	◎ n, a, p.
4	90.3	97.7	99.9	3.0	4.0	7.4	7.6	5.5	6.2	6.7	90	80	86	NNE 6	WSW 1	WSW 1	10	6	4	15.6	◎ n.
5	00.1	99.2	98.1	3.1	6.6	9.6	7.4	5.6	7.4	6.4	77	84	83	WSW 1	WSW 2	WSW 2	3	4	10		
6	99.0	97.9	98.5	2.5	3.2	6.2	3.8	3.6	4.0	4.2	63	56	70	NW 4	WNW 4	W 3	1	3	1		
7	99.0	98.5	97.4	-0.3	1.2	0.2	-1.0	3.9	3.7	3.1	77	79	73	NE 3	NE 4	NE 4	8	10	8		
8	95.9	96.6	97.6	-3.4	-3.4	-2.0	-3.2	2.1	2.5	2.2	58	62	59	N 4	NE 4	N 3	4	5	10		
9	98.0	98.8	00.1	-4.4	-2.6	-2.0	-2.0	3.0	3.0	2.7	79	76	67	NE 4	NNE 4	NE 4	10	6	6		
10	04.8	08.6	13.1	-3.8	-1.8	0.6	-1.8	2.4	3.9	**1.8**	58	80	45	N 4	N 2	NNE 1	5	3	1		
11	22.1	25.6	28.4	-4.2	-4.2	2.0	0.0	2.2	3.4	3.7	66	64	79	NNW 1	WSW 1	N 1	1	1	2		
12	32.2	31.4	30.6	-4.2	-1.2	3.5	2.8	3.1	4.9	4.8	73	83	86	NNW 1	WSW 1	WSW 1	5	2	2		
13	26.3	22.8	20.7	-1.6	-0.6	4.6	4.2	4.0	5.3	5.2	91	84	84	NNW 1	WSW 1	SSE 3	6	4	10		
14	15.9	15.5	16.2	-1.0	2.0	2.2	2.0	4.7	4.8	4.6	89	89	85	N 1	N 1	0	10	10	10		
15	18.8	19.7	20.2	-1.4	-0.4	0.4	0.2	3.5	3.8	3.9	78	80	83	N 2	N 1	N 1	10	8	5		
16	21.3	20.8	21.2	-1.8	0.2	3.2	4.0	4.1	5.4	5.5	88	93	90	N 2	0	WSW 2	10	10•	2		◎ p.
17	29.2	32.2	34.4	0.2	2.4	4.4	1.0	4.1	4.8	4.0	75	77	81	NNW 2	0	0	3	3	3	2.2	
18	**35.6**	34.9	34.1	-1.5	-1.0	5.0	4.2	3.7	5.3	5.0	86	81	80	0	WSW 3	WSW 3	4	4	2		
19	31.2	27.7	26.0	-1.0	4.4	7.2	6.8	5.2	6.3	6.3	84	83	86	WSW 2	W 4	WSW 3	4	10	4		
20	19.6	17.7	18.6	4.2	8.2	10.4	9.8	7.4	**8.0**	7.6	92	85	84	WSW 3	W 4	W 2	10	4	1		
21	13.3	12.7	13.0	6.9	9.4	**10.6**	9.6	7.9	6.8	7.4	89	72	84	WSW 2	W 1	WSW 3	2	4	10		
22	10.0	07.4	02.9	6.1	6.6	7.8	7.2	6.4	7.0	6.7	88	89	89	W 2	WSW 3	WSW 4	8	9	3		
23	07.3	07.3	08.0	4.2	4.2	5.8	3.4	4.6	4.4	4.5	74	64	76	W 2	NNW 4	WNW 3	1	1	0		
24	03.5	04.2	04.3	1.2	4.2	3.4	1.0	4.6	3.5	2.9	74	60	58	WSW 4	NW 3	NNW 3	5	3	2		
25	98.4	02.7	05.8	-0.8	0.2	0.4	-0.2	1.9	2.5	1.9	40	52	43	NNE 3	NNE 4	N 3	10	4	1		
26	11.7	10.5	05.1	-3.2	-3.2	-0.4	3.0	2.0	2.2	4.3	54	50	76	NNW 2	W 1	WSW 4	3	6	10		
27	90.2	**87.5**	88.2	-3.2	0.6	-0.2	-1.0	3.3	3.0	2.4	68	67	56	W 2	NNE 1	N 2	3	6	6	4.2	
28	89.1	90.8	96.8	-4.6	-4.6	-1.6	1.0	2.3	3.3	4.4	70	81	89	N 3	NNE 6	ENE 9	4	6	10•		✱ u. ◎ p.
29	08.4	08.3	08.3	-5.4	-5.4	-5.2	-5.6	2.1	2.2	2.1	68	69	68	NNE 4	NNE 3	NE 3	10•	7	6	0.6	
30	08.6	08.4	08.6	**-6.5**	-5.0	-3.2	-3.0	2.2	2.7	2.7	69	73	74	NNE 3	NE 2	N 2	10	10	10		
M.	11.1	11.2	11.3	0.0	1.5	3.4	2.7	4.2	4.7	4.6	76	76	77	2.7	2.6	2.7	6.3	6.0	5.6	76.0	

December.

Datum.	Luftdruck. 900 oder 1000 + 8	2	7	Luft-Temperatur. Min.	8	2	7	Absolute Feuchtigkeit. 8	2	7	Relative Feuchtigk. 8	2	7	Richtung und Stärke des Windes. 8	2	7	Bewölkung. 8	2	7	Niederschl.	Bemerkungen.
1	08.8	09.3	09.7	-6.0	-6.0	-6.6	-7.0	2.0	2.0	1.8	67	71	64	NNE 3	N 2	NE 1	10	3	1		
2	10.3	11.4	14.5	-9.5	-9.0	-5.6	-5.2	1.4	2.2	2.3	59	73	74	NNW 3	NNW 2	N 1	10=	2	1		
3	20.6	24.8	29.0	-9.4	-8.6	-3.4	-4.6	1.8	1.8	2.3	73	49	70	NNW 2	N 2	NNW 3	2	2	1		
4	**31.0**	29.3	29.6	-9.4	-4.4	1.6	2.0	2.4	4.6	4.4	71	89	82	W 1	WSW 3	WSW 2	3	4	1		
5	28.6	27.1	24.8	-4.6	3.4	4.0	4.6	4.5	5.5	5.1	76	90	81	WSW 2	WSW 1	SW 4	4	10	10		
6	10.0	09.0	12.2	3.4	6.0	**7.2**	4.8	5.7	**6.9**	4.6	82	91	71	WSW 5	WSW 4	W 3	10	8	10		
7	17.2	18.0	17.3	-0.5	0.0	-0.4	1.6	3.7	4.3	4.6	79	95	89	NNW 2	NNE 1	N 1	7	10	10		
8	13.8	11.5	08.9	0.0	1.8	3.2	3.4	4.1	4.6	4.9	78	80	83	ESE 3	ESE 3	SE 3	10	10	10•		
9	01.7	98.6	97.8	0.6	2.6	2.6	1.4	4.9	5.1	4.7	89	93	92	SE 4	SSE 3	N 1	10•	10•	3	5.1	◎ n, ● u. ✱ a, p.
10	91.9	88.3	88.2	1.4	3.4	3.6	4.8	5.4	5.5	6.0	93	93	94	SE 5	ESE 4	ESE 2	10•	10•	10	7.5	◎ n, a.
11	91.8	93.9	94.9	1.3	1.8	2.0	1.6	4.5	4.4	4.4	85	82	85	NNE 3	N 1	NW 1	10	10	10	8.4	◎ n.
12	95.9	97.3	99.0	-1.4	-1.4	-0.4	0.6	3.0	3.9	3.9	72	87	80	N 1	NNE 2	N 2	2	10•	10		
13	99.2	98.9	99.3	-4.2	-4.2	-3.6	-4.4	2.2	2.2	1.9	66	63	56	NNW 2	NNW 2	NNW 3	3	3	1	0.0	
14	07.9	12.2	15.2	-6.3	-5.8	-4.4	-5.8	1.9	2.0	2.0	62	61	67	NNE 3	NE 4	NNE 2	5	3	3		
15	17.7	19.1	20.6	-10.6	-9.6	-8.2	-9.2	1.5	**0.9**	1.4	64	37	58	NNE 3	NNE 4	N 2	7	3	2		
16	18.0	12.6	11.2	**-10.8**	-6.8	-2.0	1.0	1.8	3.4	4.2	65	85	85	0	NNW 1	WSW 3	10	10	7		
17	97.2	99.7	04.6	-7.0	5.0	3.0	-0.4	6.1	2.6	2.8	94	46	62	WSW 4	NW 4	NW 2	8	1	3		
18	03.8	01.4	97.9	-3.4	-2.4	-1.0	-2.0	2.9	2.6	2.7	75	60	67	W 3	W 1	NNW 3	1	1	0		
19	97.0	99.5	02.6	-4.1	-3.6	-3.6	-5.6	1.9	1.2	1.8	53	34	57	N 3	NNW 3	N 2	2	2	0		
20	01.1	98.7	93.4	-9.5	-9.0	-4.0	-1.4	1.1	2.3	2.1	46	67	51	N 1	ESE 2	ESE 7	4	8	10		
21	77.0	74.9	76.9	-9.1	-4.6	-4.4	-3.6	2.8	2.9	3.1	86	86	87	ENE 8	NE 7	NNE 5	10•	10•	10	1.1	✱ n, a, p.
22	82.0	85.4	85.8	-5.7	-3.2	-2.4	-4.8	3.2	3.3	2.4	88	84	75	W 2	W 1	N 1	7	8	10	3.3	✱ n.
23	79.5	82.1	86.5	-5.4	-3.4	-1.6	-1.0	3.0	2.8	3.3	82	68	77	N 4	NW 3	W 1	10•	8	9	1.2	✱ n.
24	89.0	87.5	87.7	-3.6	0.4	1.0	-1.6	4.4	4.6	3.7	92	92	90	WNW 1	WSW 1	0	8	8	7		
25	89.0	90.2	89.7	-3.7	0.8	1.8	2.0	4.1	3.7	4.0	85	71	75	WSW 2	WSW 3	WSW 4	7	6	6	0.5	✱ sch. n.
26	92.9	95.3	97.7	0.6	0.6	0.6	-0.4	3.9	4.3	3.9	80	88	87	W 3	W 2	W 1	6	6	3		
27	92.7	89.1	88.0	-2.6	2.4	0.8	0.2	5.1	4.7	4.3	93	96	92	ESE 3	E 3	NE 3	10	10•	10		✱ u. ◎ a, p.
28	88.6	90.2	91.4	-2.6	-2.6	-1.2	-0.8	3.0	3.8	3.9	79	90	91	ENE 3	ENE 2	ENE 3	10	10	10	16.5	✱ n.
29	84.9	82.0	76.5	-2.6	3.2	2.4	4.4	5.6	5.3	6.0	97	96	97	SSE 3	0	S 3	10•	10=	10•	2.6	◎ n, a, p.
30	72.4	72.4	72.4	2.3	4.8	5.0	4.0	6.0	5.9	5.7	94	90	93	WSW 4	WSW 5	WSW 3	10	9	8	18.0	◎ n.
31	**71.4**	78.1	85.4	1.8	3.8	4.0	4.4	5.6	5.7	5.2	93	93	84	W 1	W 1	WSW 3	10	6	4	1.3	● n.
M.	99.4	99.6	00.3	-3.9	-1.4	-0.3	-0.5	3.5	3.7	3.7	78	77	78	2.8	2.5	2.4	7.3	6.8	6.1	65.5	

$H = 43$ m, $H_b = 44.4$ m $\varphi = 60^0\ 24'$ N

$C_g = 1.35$ mb bei 1014 mb $\lambda = 5^0\ 19'$ E

Januar.

Datum	Luftdruck 900 oder 1000 + 8	2	7	Luft-Temperatur. Min.	8	2	7	Absolute Feuchtigkeit. 8	2	7	Relative Feuchtigk. 8	2	7	Richtung und Stärke des Windes. 8	2	7	Bewölkung. 8	2	7	Niederschl.	Bemerkungen.
1	78.3	80.7	76.9	1.9	3.1	5.8	4.3	5.5	6.2	5.3	96	90	85	SSE 6	SW 5	S 4	10●*	9●	10	11.7	●*^{0}, △, ● n, ●*, △, ● a, ●^{0}, △^{0}, ●*^{0} p.
2	**54.8**	61.9	57.5	0.7	4.2	5.7	3.8	5.9	6.2	5.9	96	91	98	SSW 5	WSW 3	SSE 4	10●*	10●	10●	28.5	●, ●*, △, ⫽ böen S n, K 6 1/2 a, ●^{0} a, p.
3	68.2	72.2	75.5	2.1	5.4	2.2	3.8	4.2	5.4	5.6	63	00	93	WSW 2	S 4	SSE 2	10	10△	10	15.2	● sch., △^{0} sch. n, ●, ●*, △ sch. a, ●, △^{2} sch. p, K 6^{17}, 7^{45} p.
4	79.7	79.4	85.3	1.3	2.6	2.6	3.0	5.5	5.3	4.9	00	96	87	SE 2	NNE 3	NW 1	9	9	9	13.6	△ sch. n, ●^{0} sch. a.
5	91.7	90.9	90.9	0.7	2.7	3.7	2.6	4.7	5.2	4.8	84	87	86	SSE 4	SSW 2	WSW 2	10*	7	9	2.1	*^{0} n, ●^{0}, ●*^{0}, △ a, K^2 10^{20} a, ●*^{0} p.
6	00.3	07.7	09.0	0.6	0.6	1.7	0.3	4.8	3.9	4.3	00	74	92	WNW 5	N 4	SE 2	10*	6	10	11.1	* sch., △ sch. n, *^{0} sch., △ sch. a, *^{0} sch. p.
7	96.1	97.8	02.3	0.0	7.6	8.0	6.5	7.8	7.7	6.8	00	96	94	WNW 4	W 3	WNW 2	10●	10●≡	10	30.2	*, ●, ⫽ böen W n, ●, ≡ ●^{0} a, ●^{0}, ● p.
8	04.2	03.3	99.4	6.1	7.5	7.1	6.3	7.4	7.3	6.9	96	98	98	WSW 2	WSW 3	WSW 2	10	10●≡	10●	15.2	● sch. n, ●^{0} a, ●^{0}, ● p.
9	88.4	00.9	07.8	4.2	5.7	4.8	2.8	6.7	5.1	5.4	99	79	96	WNW 2	N 4	NNW 1	10●	3	9	29.8	● n, a, ●^{0} sch. p.
10	13.7	10.3	09.3	2.2	4.0	6.4	6.8	5.4	6.9	7.4	88	96	00	SSE 3	S 5	S 5	10	10●	10●≡	4.8	●^{0} sch. n, ●^{0} a, ● p.
11	13.5	15.0	17.0	3.7	8.7	8.7	7.4	7.6	7.6	7.7	91	91	00	W 2	W 2	SSE 2	10	10	10	14.4	●, ⫽ böen WSW n, ●^{0} sch. a, ≡ ●^{0} p.
12	17.2	17.2	16.3	6.7	6.7	6.6	6.6	6.7	6.9	6.3	91	94	87	SSE 3	SSE 4	SSE 4	10	10	10	5.3	●^{0} sch. n, ● tr. a.
13	12.4	09.5	09.9	4.6	5.1	5.7	5.4	5.6	5.5	6.6	86	80	99	SSE 5	S 6	SSE 5	10●≡	10	10●≡	0.0	≡ ●^{0} n, ● tr. a, ●^{0}, ● p.
14	95.8	93.0	95.0	4.7	**9.7**	7.1	7.8	5.8	7.2	6.6	64	96	83	S 8	S 9	S 6	10	10●	10	3.5	● tr., ⫽ böen S n, ●, ⫽ böen S a, ●^{0} p.
15	96.6	99.4	06.7	6.6	7.4	5.8	4.7	6.6	5.8	5.8	86	85	90	SSW 4	WNW 3	NNW 1	10	9△	5	7.1	⫽ böen WSW n, ● sch., △^{0} sch. a, △^{0} sch. p.
16	14.1	17.1	18.4	4.0	7.4	7.5	7.0	7.2	7.6	7.4	94	99	99	SSW 5	SSW 5	SSW 5	10●	10●≡	10	12.7	●, △ sch., ⫽ böen WSW n, ●^{0} a, ● p.
17	18.4	18.8	17.8	6.3	6.6	6.5	6.2	7.1	5.7	5.9	98	80	84	SSW 3	SSE 4	S 5	10	10	10	10.6	●^{0} sch. n, a, p.
18	17.8	17.5	16.4	5.6	8.0	8.4	8.3	**7.9**	7.8	7.6	99	94	93	SSE 4	S 4	SSW 2	10●	10	10●	7.8	● n, ● sch. a, ● p.
19	32.1	38.1	40.0	3.4	3.5	4.1	2.5	4.9	5.3	4.2	83	87	75	NNE 3	WNW 2	NE 1	10△	2	0	13.1	●^{0} sch., △^{0} sch. n, △ sch. a, ⩍ III.
20	37.6	35.5	34.7	0.9	2.2	5.5	5.1	2.9	**2.5**	**2.5**	54	36	38	SE 2	SSE 4	S 3	0	5	0	0.3	
21	31.4	30.8	29.6	1.8	4.4	4.6	2.9	4.6	3.9	3.9	74	62	69	SSE 5	SSE 3	SE 2	10	6	3		
22	28.1	26.6	23.7	1.6	1.9	3.1	1.2	4.0	4.5	4.3	76	78	85	SE 2	SE 2	SSE 2	9	7	0		
23	18.2	17.7	17.7	0.9	1.6	2.5	2.2	4.2	4.3	4.6	82	77	86	SSE 2	SSE 3	S 1	9	10	0		
24	22.1	24.5	26.2	0.8	0.8	1.9	1.2	4.5	4.7	4.7	92	89	92	NW 0	WNW 1	0	8	8	0		●^{0} sch. a, p.
25	33.2	37.1	38.9	-1.5	-1.4	1.6	0.6	3.8	4.2	3.8	93	82	79	0	0	W 0	0	0	0	0.1	⊔ n.
26	**40.2**	39.1	37.3	-1.5	-1.2	2.0	-0.9	3.3	3.7	3.5	79	69	82	W 0	SE 0	0	0	2	0		⊔ n.
27	30.8	27.7	23.7	-3.4	-3.4	0.6	-1.9	3.3	3.4	3.2	93	72	80	W 1	W 1	SW 1	0	3	3		⊔ n.
28	16.3	13.7	11.1	-3.7	-3.7	1.5	-1.1	3.2	4.1	3.1	93	80	74	0	SE 1	SE 1	4	5	4		⊽ III.
29	03.2	88.1	74.4	**-3.9**	0.6	4.0	2.2	3.3	3.5	4.8	68	58	89	SSE 4	SSE 6	SSE 6	10*	10	10●*	0.0	* fl. n, a, ●^{0}, ●*, ⫽ böen S p, K 11^{20} p.
30	78.7	81.6	84.9	0.6	5.0	6.6	6.4	5.2	5.1	5.0	80	70	69	WSW 3	WSW 3	WSW 5	10	10●	10	24.7	●*, △ n, △^{0}, ●^{0} a, △^{0}, ●^{0}, ⫽ böen W p.
31	68.5	83.3	86.1	2.1	6.4	5.6	4.5	6.8	5.3	4.3	94	79	68	SSW 5	WNW 4	WNW 2	10●	9	9	21.3	△, ●*, ● n, ●, ●^{0}, ⫽ böen WNW a, ●^{0}, △^{0} p.
M.	06.5	07.6	07.7	1.9	3.9	4.8	3.8	5.4	5.4	5.3	87	83	85	3.1	3.3	2.5	8.4	7.7	6.8	283.1	

Februar.

Datum	Luftdruck 900 oder 1000 + 8	2	7	Luft-Temperatur. Min.	8	2	7	Absolute Feuchtigkeit. 8	2	7	Relative Feuchtigk. 8	2	7	Richtung und Stärke des Windes. 8	2	7	Bewölkung. 8	2	7	Niederschl.	Bemerkungen.
1	91.1	96.4	05.2	0.3	0.4	2.5	0.8	4.8	4.9	4.5	00	89	92	SE 1	SSE 1	N 2	9*	9	9*	10.6	△^{0} sch., *^{0} n, *^{0} sch., ●*^{0} sch. a, p.
2	**12.3**	05.3	04.1	-1.1	0.9	1.9	6.2	3.6	5.0	6.0	74	94	86	SSW 3	SSE 5	W 3	10	10●*	8	1.5	*^{0} sch. n, *, ●* a, ●, △ sch. p.
3	04.5	03.0	96.2	0.8	3.8	5.3	6.2	5.3	6.1	6.5	88	92	93	SSE 3	S 2	S 6	10●	10●	10	15.2	△ sch., ●^{0} sch. n, ●^{0} sch. a, ●^{0}, ● p.
4	01.3	06.0	08.0	1.6	2.8	2.0	2.0	4.7	4.7	4.8	83	89	85	NW 3	NW 3	SSE 2	10	8*	10	15.1	●, △^{2}, ⫽ SSW n, K 9^{20} a, △, * a, *^{0} p.
5	90.3	90.1	89.0	1.4	6.6	5.2	1.9	**7.0**	4.8	4.8	96	72	91	S 4	WSW 3	WSW 5	10●	7	10●*	22.2	●*, ●, ⫽ böen S n, ● sch. a, ●*, △ p.
6	85.4	87.9	88.4	0.5	4.0	2.5	1.6	4.0	4.3	4.8	66	77	93	WSW 4	NW 2	NW 0	9	8	10△	5.5	△ sch., *^{0} sch., ⫽ böen WNW n, *^{0} sch., △^{0} sch. a, p.
7	92.9	97.2	98.7	0.0	0.4	2.0	-1.2	4.6	4.0	3.4	96	75	81	N 1	N 2	SE 2	3	1	0	12.5	* sch. n.
8	85.2	79.0	74.4	-1.5	2.8	3.3	4.1	3.9	4.9	5.5	69	85	90	S 7	SSE 6	SSE 5	10	10●	10△		⫽ böen S n, *, ●*, ⫽ SSE a, ●^{0} p.
9	72.1	72.4	76.4	1.2	3.6	4.1	2.3	5.1	4.8	5.1	87	79	93	SW 3	WSW 4	W 5	10△	8	10△	13.7	△, ●*, ●^{0} n, △^{0}, ●*^{0}, ⫽ WSW a, △^{2}, ●*^{0} p.
10	82.8	79.8	67.6	0.7	2.5	6.1	6.9	5.2	6.0	6.8	94	86	91	SSE 2	SSE 5	S 7	10●*	10	10●	11.4	△, ●* n, △ a, ●, ⫽ SSE p, K 6^{50} p.
11	78.1	80.1	81.0	2.3	4.8	4.6	2.8	5.1	5.5	5.4	79	87	96	S 4	W 2	SE 3	10	9	7	20.9	●, △, ⫽ böen WSW n, △ a, △, ●^{0} p.
12	66.4	**60.1**	77.0	2.6	5.0	5.4	1.4	6.2	6.0	5.0	95	89	98	SSE 4	WSW 5	SE 2	10●	10	10●*	16.3	● n, ●, ●*, △, ⫽ böen SSE a, ●, ●* p.
13	83.6	88.3	85.6	0.7	1.9	4.3	4.9	5.2	5.2	5.1	98	84	79	SSE 3	SSE 3	SSE 2	10●*	7	10●	23.9	●* sch., △ sch., ● sch. n, K 4^{10} a, ●* sch. a, ●^{0} p.
14	87.9	88.3	89.2	1.3	8.3	**9.3**	9.1	4.1	4.7	5.0	51	53	58	SSE 2	E 2	SSE 5	10	10	10●	5.0	● sch. n, ●^{0} p.
15	93.7	97.1	99.8	3.3	3.4	5.8	4.6	5.6	5.8	5.9	97	85	94	SE 1	SSE 2	0	10●	9	9●	3.0	●^{0} n, a, ⊕ II, ●^{0} sch. p.
16	92.3	88.5	91.2	2.8	6.0	9.1	7.9	3.1	4.7	4.4	45	55	56	E 3	ENE 4	ENE 4	10	7	10	0.2	●^{0} sch., ⫽ böen ENE a.
17	94.2	95.5	95.5	5.7	7.0	9.0	5.3	3.9	4.2	4.6	52	49	69	ENE 5	SSE 1	S 1	8	6	9	0.0	
18	95.8	97.8	99.1	2.7	2.7	8.0	3.3	4.5	4.2	4.3	81	54	73	WNW 1	WSW 1	SSW 0	2	0	0	0.0	●^{0} sch. n.
19	99.1	03.6	06.9	-1.3	-0.8	2.1	0.8	3.7	**1.6**	1.7	86	30	35	W 1	NE 4	NNE 2	1	0	0		⊔ n.
20	09.2	09.0	07.8	**-3.3**	-1.4	2.2	0.4	1.8	2.2	3.0	44	41	64	SE 2	SE 3	SSE 2	2	9	9*		*^{0} sch. p.
21	06.1	07.5	08.5	-1.6	0.4	2.8	2.1	4.2	4.3	4.2	89	76	78	SE 2	SSE 3	SSE 3	10	9	10	0.3	*^{0} sch. n, a, p.
22	09.0	08.9	08.0	0.4	0.9	1.9	1.5	3.0	2.9	2.4	62	56	47	SSE 3	SSE 4	SSE 4	7	10	10	0.3	
23	06.8	05.4	05.6	-1.8	-1.5	3.0	1.0	2.1	2.1	2.2	52	36	45	SSE 1	E 2	ESE 2	3	6	3		
24	03.5	01.0	99.2	-1.7	-1.7	3.7	0.8	2.1	2.0	1.9	53	33	40	S 1	E 3	ENE 3	2	1	2		
25	93.7	93.3	91.9	-1.7	2.1	4.6	3.8	2.2	3.0	2.7	41	47	45	ENE 4	E 3	E 2	2	8	10		
26	86.1	85.5	84.0	1.8	6.1	8.0	7.4	3.1	3.3	3.2	45	41	41	E 4	E 4	E 5	10	10	10		⫽ böen ENE n, ● tr. a.
27	85.2	86.7	86.8	4.5	4.6	4.2	3.6	2.9	2.8	2.6	45	44	44	E 5	ENE 4	ENE 6	10	10	10	0.0	⫽ böen ENE p.
28	90.4	92.0	94.2	3.6	4.6	6.8	5.2	3.5	3.7	4.3	54	50	65	SW 1	ENE 3	SSW 1	10	9	10		● tr. p.
M.	92.8	93.1	93.5	0.9	2.9	4.6	3.5	4.1	4.2	4.3	72	66	72	2.8	3.1	3.0	7.8	7.5	8.1	177.6	

$H = 43$ m, $H_b = 44.4$ m — $\varphi = 60^0\ 24'$ N

$C_y = 1.35$ mb bei 1014 mb — $\lambda = 5^0\ 19'$ E

März.

Datum.	Luftdruck. 900 oder 1000 + 8	2	7	Luft-Temperatur. Min.	8	2	7	Absolute Feuchtigkeit. 8	2	7	Relative Feuchtigk. 8	2	7	Richtung und Stärke des Windes. 8	2	7	Bewölkung. 8	2	7	Niederschl.	Bemerkungen.
1	01.5	05.1	07.2	2.3	2.4	5.0	4.2	4.5	4.7	4.9	82	72	79	SSE 2	SSW 1	WNW 1	8×	9	9	0.0	✱⁰ n, a.
2	12.4	15.3	18.0	1.6	1.6	5.0	3.0	4.6	4.5	4.1	89	69	72	WNW 1	NNW 1	NW 2	6	6	3	0.0	
3	24.5	**24.9**	24.3	-1.1	-0.5	4.0	2.9	3.9	3.9	4.2	88	63	74	0	0	S 2	7	10	10×		⊕ II, ✱ fl. p.
4	18.2	18.0	17.1	-0.5	4.1	4.6	2.1	5.8	4.2	5.0	95	67	93	NNW 1	N 2	N 2	10	9	10	3.7	✱ sch., ⊛⁰ sch. n, ⊛⁰ sch. a, p.
5	06.8	96.2	91.7	0.6	0.8	5.7	5.2	4.9	6.7	5.8	00	99	87	ENE 3	WSW 4	N 2	10•	10•	9×	2.0	✱⁰ n, ⊛ ✱, ⊛ a, ⊛⁰, △⁰ p.
6	89.9	89.1	87.1	0.8	2.9	3.4	2.8	5.2	5.5	5.2	93	95	93	NW 4	NW 3	WNW 3	10•	10•	9•	18.1	⊛⁰ sch., △⁰ sch. n, a, p.
7	84.8	84.0	**83.0**	0.0	0.4	3.0	0.4	4.6	4.6	4.4	96	81	92	NNE 2	W 1	SE 2	10×	7×	4	5.9	✱⁰ sch., △⁰ sch. n, ✱⁰ sch. a, ✱⁰ sch.,
8	85.3	89.1	90.0	-2.5	-2.5	-0.4	-2.4	2.4	2.1	2.3	63	48	59	NNE 2	N 1	S 1	7	2	10	7.4	✱ sch. n, ✱⁰ sch. p. [△⁰ sch. p.
9	93.2	99.4	02.5	-4.5	-3.4	-0.4	-1.1	2.3	2.1	2.3	65	47	54	0	NNW 3	N 2	4	3	3	0.0	✱⁰ sch. n.
10	13.2	15.6	16.7	-3.8	-2.6	1.1	-0.6	2.0	2.2	2.4	54	44	55	N 2	N 2	N 0	0	0	1		
11	19.9	21.1	24.5	-4.1	-2.7	0.3	-2.4	2.7	1.6	**1.2**	73	35	32	SW 0	NNE 4	NNE 4	0	0	1		
12	23.8	22.3	20.2	-4.2	-3.8	1.1	-0.2	2.1	2.3	2.0	60	47	45	NE 1	NNE 2	NNE 2	1	5	3		
13	13.2	09.3	07.1	-4.1	-3.1	2.1	-1.0	2.7	2.4	2.2	74	45	51	SSE 1	S 2	SE 2	9	3	1		
14	04.9	05.9	07.4	-3.4	-2.0	0.0	-1.0	3.0	2.6	2.6	76	58	61	N 1	NNW 2	N 2	7×	10×	8	0.0	✱⁰ sch. n, ⊕ 10 a, ✱⁰ sch. a, p.
15	16.9	20.1	21.6	**-4.7**	-3.4	2.0	0.7	1.6	2.7	3.5	46	51	73	SE 2	SSE 2	SSE 2	6	9	10×	0.0	✱ fl. p.
16	20.8	19.4	16.0	-3.4	1.6	1.5	1.5	5.0	4.9	5.1	96	96	00	SSE 4	S 6	SSE 5	10•	10•̣	10•̣	1.2	✱ sch., ⊛⁰ n, ⊛⁰, ⊛ ✱ u. ⸝böen S a, ⊛⁰,
17	20.7	23.1	23.4	1.0	1.6	4.4	3.0	4.1	3.8	4.3	80	60	76	NW 2	NW 1	W 0	1	10	10	16.6	⊛ ✱, ✱ n. [⊛ ✱ p.
18	22.7	21.8	20.6	1.4	2.4	4.5	4.5	5.3	6.3	6.3	96	00	00	SE 3	SSE 2	SSE 2	10•	10•̣	10•̣	1.0	⊛⁰ n, a, ≡ ⊛⁰ p.
19	14.2	15.5	14.0	2.3	6.4	4.8	3.9	**7.2**	6.0	5.4	00	94	88	W 2	WNW 2	W 1	10•	9	8	7.5	⊛ n, ⊛⁰ sch. a, ⊛⁰ sch. mit ⊛ ✱ p.
20	09.9	07.6	06.4	-0.6	0.3	3.2	1.0	4.5	4.3	4.2	96	74	85	WNW 2	NNW 2	NNE 2	10	9	7	4.7	△ sch., ✱ sch. n, ✱ sch. a, ✱⁰ sch. p.
21	05.8	07.4	08.8	-0.3	0.5	3.5	2.6	3.6	3.3	3.1	77	55	55	NNE 2	NNE 4	NNE 4	6	3	2	5.2	✱⁰ sch. n.
22	12.4	13.4	12.3	-0.1	0.5	3.9	2.7	3.1	3.6	4.0	66	59	72	N 2	NW 2	NNW 2	1	3	8		✱⁰ sch. p.
23	05.5	00.9	97.9	0.5	1.0	1.9	1.0	3.6	4.4	5.0	72	84	00	SSE 5	SSE 6	S 7	10×	10×	10×	0.0	✱ fl. n, ✱⁰ a, ✱, ⸝ böen S p.
24	93.4	94.5	96.0	0.2	1.5	2.9	3.4	4.9	5.2	4.9	96	93	83	SSE 5	SSE 5	SSE 4	10•̣	8	7	16.5	✱, ⊛ ✱ sch. n, ⊛ ✱ sch. a.
25	03.9	06.8	08.4	1.3	2.8	**7.6**	5.6	4.1	4.1	3.7	72	53	55	0	NW 1	NE 2	6	3	1	2.5	
26	13.0	14.1	14.7	0.3	0.8	5.6	4.4	4.2	4.3	5.0	86	64	80	SW 0	W 1	NW 1	0	5	2		⌣ n.
27	15.1	13.3	09.7	0.6	1.7	1.9	1.7	4.7	4.9	4.8	91	93	93	SE 2	SSE 3	SSE 4	10	10•̣	10•̣		⊛⁰, ⊛ ✱ a, ⊛ ✱⁰, ⊛ ✱ p.
28	12.0	11.1	08.6	-1.3	-1.0	1.2	-1.0	2.6	3.1	4.0	61	63	93	NNE 4	NNW 2	0	2	5	10×	5.0	⊛ ✱ sch., ✱⁰ sch. n, ✱⁰ sch. a, ✱⁰ p.
29	06.5	06.7	04.3	-4.3	-1.8	-0.3	1.0	3.1	3.7	3.4	76	83	69	SE 1	ESE 3	SSE 3	4	10×	10	1.9	✱ sch. n, ✱⁰ a, ✱⁰ sch. p.
30	98.6	97.5	94.0	-1.8	5.3	6.3	6.0	6.1	6.0	6.0	92	84	87	S 5	S 4	SSE 5	10•	10	10	5.1	✱ sch., ⊛ sch. n, ⊛⁰ a. [✱⁰ sch. p.
31	94.0	99.1	00.8	2.8	3.1	5.8	2.6	5.0	4.7	4.3	88	69	77	W 0	WNW 2	N 1	8	6	10	6.5	⊛ sch., ⸝ böen S n, ⊛⁰ sch , ⊛ ✱⁰ sch. a,
M.	08.3	08.6	08.2	-0.9	0.5	3.1	1.8	4.0	4.0	4.1	81	69	75	2.0	2.5	2.3	6.5	6.9	7.0	110.8	

April.

Datum.	Luftdruck. 900 oder 1000 + 8	2	7	Luft-Temperatur. Min.	8	2	7	Absolute Feuchtigkeit. 8	2	7	Relative Feuchtigk. 8	2	7	Richtung und Stärke des Windes. 8	2	7	Bewölkung. 8	2	7	Niederschl.	Bemerkungen.
1	96.5	97.7	99.5	0.6	1.2	3.8	2.2	3.3	4.1	3.6	66	67	66	NNE 3	NNW 4	SW 1	8	7	9	1.0	⊛⁰ sch. a. [⊛⁰ p.
2	92.0	92.5	94.5	1.2	3.8	2.8	3.1	5.3	4.9	4.0	88	88	69	S 7	SW 2	WSW 1	10•	10•	9	7.7	⊛, ⸝böen SSE n, ⊛, ⊛ ✱, ⸝ böen SSE a,
3	99.6	03.9	06.0	**-2.5**	-2.1	3.1	0.0	3.5	3.5	3.6	90	62	78	N 1	WNW 4	WNW 1	10×	4	9×	30.1	✱ sch., △⁰ sch. n, ✱ sch., △ sch. a, ✱⁰ sch.,
4	09.7	09.8	09.8	-2.1	1.1	3.7	3.3	3.9	3.6	4.4	78	60	75	SSE 3	SSE 4	SSE 5	9	10	10	2.8	✱⁰ sch. n, ✱ fl. a. [△⁰ sch. p.
5	10.6	09.8	09.6	1.0	3.3	6.8	7.4	3.5	3.8	4.3	60	52	57	SSE 3	SSE 4	SSE 2	8	10	8	0.0	
6	07.5	07.9	08.0	3.3	11.0	14.7	13.0	4.1	4.3	3.6	42	35	32	SSE 3	SSE 3	SSE 2	7	5	9		⊕ a.
7	10.9	11.6	11.7	10.2	12.3	15.7	13.3	**2.4**	3.0	3.2	22	23	28	SSE 2	SSE 4	SSE 2	2	0	0		
8	13.4	13.5	13.1	2.8	6.5	15.1	12.7	3.9	3.1	3.2	54	24	29	0	SSE 5	S 3	5	2	1		⌣ n.
9	11.3	11.0	11.4	3.3	6.3	15.7	12.9	4.1	3.9	3.8	58	30	34	W 1	SSE 3	SSE 2	1	2	2		⌣ n.
10	14.0	15.9	17.9	6.2	9.5	**16.2**	13.6	4.8	4.1	3.9	54	30	33	W 1	SSE 3	SSE 2	0	0	0		
11	**20.9**	19.8	18.7	4.4	7.4	15.5	13.6	4.7	5.0	4.9	61	39	42	SW 1	ESE 3	SSW 4	0	8	1		
12	17.0	14.6	12.6	4.8	7.1	15.4	11.6	5.1	4.6	5.4	68	35	53	WSW 0	SSW 1	NW 1	0	1	3		⌣ n.
13	07.2	03.4	01.1	3.7	6.1	14.3	9.4	5.0	4.9	5.9	72	41	67	0	SSE 3	S 2	0	3	10		⊛⁰ sch. p.
14	98.6	00.0	00.2	6.1	6.3	7.3	6.9	6.3	6.1	6.3	88	80	84	SSE 4	SSE 4	S 2	10•	10	9	2.4	⊛⁰ n, ⊛ a, ⊛⁰ sch. p.
15	91.0	83.9	80.0	4.3	6.3	9.5	7.9	4.7	3.2	4.1	66	36	52	SSE 1	SSE 3	ESE 2	1	9	10•	3.8	⊛⁰ sch. n, ⊛ tr. p.
16	**79.5**	84.0	87.2	4.7	4.7	3.7	4.4	5.0	5.3	5.0	78	88	80	SSE 3	SSE 4	SSE 2	10•	10•	9	0.0	⊛⁰ sch. n, ⊛⁰ a, p.
17	93.8	95.7	96.4	2.6	3.8	6.1	6.0	5.3	5.1	4.9	88	74	70	SSE 1	NNE 3	NW 2	10•	8	7	3.1	⊛⁰ sch. n, a.
18	98.7	00.1	01.1	2.1	2.5	7.2	5.5	5.2	5.4	4.5	94	72	67	SSW 1	N 2	NNW 2	10•̣	7•	3	5.9	⊛ sch., ⊛ ✱ sch. n, ⊛ ✱ sch., ⊛⁰ sch. a, p.
19	06.7	09.2	11.1	1.8	4.8	7.8	5.5	4.8	5.1	4.5	74	64	67	N 2	NNW 2	NNW 3	1	7	5	1.3	
20	13.8	13.6	13.8	2.9	4.6	5.8	4.5	5.1	6.5	5.6	81	94	89	NW 0	SSE 2	N 1	10	10•	4		≡ ⊛⁰ a, ⊛ sch. p.
21	15.9	15.0	13.5	3.4	4.8	8.7	6.7	4.6	4.4	5.0	71	52	69	N 2	W 2	W 1	7	6	7	6.2	⊛⁰ sch. n, ⊕ a.
22	05.4	04.1	00.2	4.2	6.8	6.6	5.9	3.1	6.3	6.7	42	87	97	SSE 6	SSE 3	SSE 3	10	9	10•̣		⊛, ⊛² a, ≡ ⊛⁰ p.
23	87.4	91.2	92.3	4.4	6.9	7.4	6.2	**7.0**	4.7	4.8	94	61	67	SSW 5	SW 4	SSW 4	9	7	6	52.8	⊛, ⊛² n. [△⁰ sch. p.
24	91.9	93.3	93.8	3.4	4.6	5.2	5.0	5.0	5.6	5.3	79	84	81	S 6	S 4	SSE 3	8•	9×	9•	1.8	△ sch., ⊛⁰ sch. n, ⊛⁰ sch., △⁰ sch., ⊛ ✱⁰ sch. a,
25	92.0	93.0	93.5	1.6	4.3	6.0	6.3	5.4	5.8	5.7	87	84	79	SSE 5	S 4	SSE 3	9	8	8	22.5	⊛² sch., △ n, △⁰ sch., ⊛⁰ sch., ⊛ ✱ a, △ p.
26	99.2	02.3	03.5	2.5	5.4	10.1	7.8	5.3	5.2	5.4	78	56	68	W 1	W 2	SE 1	10	7	2	8.2	△⁰ sch. n, ⊛⁰ sch. mit △⁰ p.
27	05.2	05.4	05.7	2.1	5.5	13.0	9.3	4.7	4.2	5.6	70	38	63	0	NW 2	NW 2	0	2	0	1.3	⌣ n.
28	05.9	06.2	05.8	2.0	6.1	7.9	7.0	4.9	4.7	4.4	71	59	59	SE 1	WNW 3	WNW 2	5	4	3		
29	08.7	09.9	10.0	2.3	6.3	11.3	9.3	5.0	5.4	5.6	71	53	63	0	SSW 3	W 2	3	7	2		⊛⁰ sch. mit △⁰ p.
30	07.0	05.1	04.1	2.1	5.1	9.6	7.4	5.7	5.4	5.4	88	60	70	0	WNW 2	WNW 2	7	3	1	0.1	⌣ n.
M.	03.7	04.1	04.2	3.0	5.4	9.2	7.6	4.7	4.7	4.8	71	58	63	2.1	3.1	2.2	6.0	6.2	5.5	151.0	

$H = 43$ m, $H_b = 44.4$ m
$C_g = 1.35$ mb bei 1014 mb

$\varphi = 60^0\ 24'$ N
$\lambda = 5^0\ 19'$ E

Mai.

Datum.	Luftdruck. 900 oder 1000 + 8	2	7	Luft-Temperatur. Min.	8	2	7	Absolute Feuchtigkeit. 8	2	7	Relative Feuchtigk. 8	2	7	Richtung und Stärke des Windes. 8	2	7	Bewölkung. 8	2	7	Niederschl.	Bemerkungen.
1	02.7	04.0	05.1	3.4	5.4	7.5	7.5	4.8	5.2	5.2	72	68	68	SSE 2	W 1	NNE 1	8	10	7		
2	07.0	06.0	05.5	3.7	5.6	12.6	9.8	5.6	4.8	5.4	83	44	59	N 1	NW 2	WNW 1	7	4	9		
3	03.6	06.1	08.6	3.8	5.8	8.6	7.2	5.7	5.3	5.3	84	64	70	0	W 3	W 3	6	6	7		⊗⁰ sch. p.
4	10.8	10.9	10.5	**2.5**	7.0	10.8	11.6	**4.2**	6.0	5.4	56	62	53	SE 2	WSW 2	E 1	2	9	9	0.0	⊗⁰ sch. n.
5	10.2	10.4	10.4	7.0	12.4	15.6	14.7	5.5	5.2	5.8	51	39	48	SSE 3	SE 3	E 2	10	10	9		⊗ tr. a.
6	09.5	08.6	07.1	8.0	12.0	17.6	16.2	6.1	6.3	5.1	58	42	37	W 1	W 1	ENE 4	0	5	0	0.0	
7	05.0	02.7	01.7	8.7	12.7	17.4	14.5	6.2	6.0	5.9	57	41	49	NE 1	E 1	SE 2	2	5	9		⊗ tr. p.
8	03.7	03.3	04.2	9.1	11.7	15.9	10.0	7.5	6.7	7.7	74	50	84	NE 2	NW 2	SE 2	2	7	10•	2.1	⊗ sch. n, ⊗⁰, ⸗ böen SSW p.
9	04.8	04.6	03.2	7.4	9.4	10.8	11.2	7.3	8.7	8.1	84	90	81	SSE 1	NE 1	WNW 1	10	10•	10•	1.7	⊗⁰ sch. n, ⊗⁰ a, ⊗⁰ sch. p.
10	06.4	09.6	10.0	7.1	8.1	10.0	10.0	7.1	7.7	7.7	88	84	84	SSE 5	SSW 4	SSW 3	10•	9	2	15.1	⊗ n, ⊗⁰ a.
11	06.5	04.2	02.6	8.1	13.2	12.1	8.8	5.4	7.5	7.4	47	72	88	SSE 4	SSE 2	SSE 3	1	10•	10•	2.3	⊗ tr. a, ⊗⁰ p.
12	03.6	07.6	09.5	8.4	9.1	10.8	10.9	7.4	7.4	7.0	87	76	71	S 6	SSW 5	S 3	10	7	9	5.5	⊗⁰ sch. n.
13	08.2	13.8	16.3	7.2	7.7	10.2	9.4	7.7	6.5	6.6	98	70	75	SSE 3	WNW 3	SSW 3	10•	7	9	8.0	⊗, ⊗⁰ a.
14	18.4	19.3	**20.0**	7.3	9.0	11.5	10.3	7.5	7.1	7.5	88	70	79	ESE 2	W 2	W 2	8	4	3	1.4	⊗⁰ sch. n.
15	17.4	15.0	13.8	4.8	8.7	16.2	11.9	6.7	5.4	7.2	80	40	69	0	WSW 1	SSE 2	0	2	6		
16	10.9	08.9	07.2	8.2	15.1	19.6	19.6	5.7	4.7	5.3	45	28	31	SSE 3	SSE 3	SSE 3	7	2	8		
17	08.5	10.6	12.5	14.7	19.7	22.4	16.6	6.8	6.5	7.2	40	33	51	SSE 4	SSE 6	SSE 2	10	10	8	0.2	⊗⁰ sch. n.
18	15.1	15.3	15.8	12.4	17.3	**22.6**	21.0	6.5	5.2	4.6	44	26	25	W 1	S 4	SSE 3	0	2	7		
19	18.1	18.0	16.9	10.6	15.2	21.2	17.3	6.7	6.5	6.2	52	35	43	0	NW 1	WNW 3	0	0	0		
20	13.7	10.6	07.4	9.2	13.7	19.6	17.2	6.2	7.8	7.1	53	46	48	NW 1	NW 3	NNW 2	0	0	0		
21	02.0	01.6	01.7	8.3	11.4	18.6	15.0	7.2	6.6	6.8	72	42	53	NW 2	NW 1	SSW 4	0	3	7		
22	01.0	00.1	99.9	7.3	9.4	11.7	8.8	6.8	6.4	5.6	78	62	67	S 1	W 3	NNW 3	8	7	3		
23	01.0	01.5	01.4	6.0	9.1	9.9	11.6	5.6	6.1	6.1	65	67	59	SE 2	W 3	NNW 1	4	7	7		⊗ tr. p.
24	01.9	02.7	02.1	7.7	10.8	12.6	12.5	6.7	7.1	7.4	70	66	69	E 1	W 2	NNW 2	9	10	10	0.0	⊗ tr. p.
25	01.4	02.8	03.7	9.1	9.6	9.9	10.5	8.0	8.7	9.2	89	96	98	0	NW 0	0	10•	10⊜	10	4.6	⊗⁰ n, ⊗⁰, ≡ ⊗⁰ a, ⊗⁰ p.
26	04.0	03.6	02.2	9.3	9.5	10.8	11.5	8.6	8.3	9.2	98	87	92	W 0	SSW 3	ENE 0	10•	10	7	10.3	⊗, ⊗⁰ n, ⊗⁰ a, ⊗⁰ sch. p.
27	97.0	93.5	89.7	9.4	11.7	13.5	12.5	7.9	8.0	7.9	78	70	73	SSE 4	SSE 2	SSE 4	10	10•	10•	6.2	⊗ sch. n, ⊗⁰ a. p.
28	88.1	**87.2**	88.8	11.2	12.6	16.2	12.4	9.8	8.0	**10.3**	91	59	97	SSE 2	SE 5	SSW 5	10•	10•	10•	5.3	⊗⁰ n, ⊗ tr. a, ⊗⁰, ⊗ p.
29	95.6	94.4	95.1	10.1	13.0	15.4	13.2	5.4	6.0	6.4	48	46	56	SSE 3	SSW 5	S 5	8	7	5	8.3	⊗ n, ⸗ böen S p.
30	91.2	92.6	94.6	10.1	10.1	10.9	11.0	7.7	8.3	7.7	83	85	79	S 4	S 6	S 4	10•	10	10	0.6	⊗⁰ n, ⊗⁰, ⊗ a.
31	95.1	98.7	02.3	7.9	8.6	9.4	9.2	7.5	8.3	8.4	91	95	98	S 4	SSW 4	W 2	10•	10•	10•	11.8	⊗⁰, ⊗ n, ⊗⁰ sch. a, ⊗ sch. p.
M.	05.2	05.4	05.5	8.0	10.8	13.9	12.4	6.7	6.7	6.9	71	60	66	2.1	2.7	2.5	6.2	6.9	7.1	83.4	

Juni.

Datum.	Luftdruck. 900 oder 1000 + 8	2	7	Luft-Temperatur. Min.	8	2	7	Absolute Feuchtigkeit. 8	2	7	Relative Feuchtigk. 8	2	7	Richtung und Stärke des Windes. 8	2	7	Bewölkung. 8	2	7	Niederschl.	Bemerkungen.
1	05.9	07.8	07.8	8.4	10.0	10.9	10.0	8.2	7.7	7.5	89	79	82	SSE 5	SSW 5	SSW 4	10•	10	6	8.0	⊗ sch. n, ⊗⁰ sch. a, p.
2	07.8	09.2	10.0	7.8	9.3	11.9	9.8	7.9	7.4	7.6	91	72	84	S 4	SSW 4	SSW 3	10•	8	10	18.8	⊗² sch., △ sch., ⸗ n, ⊗⁰ sch. a.
3	10.9	12.1	13.1	7.3	9.5	11.1	10.3	8.0	7.8	7.5	91	79	79	SW 1	WNW 3	WNW 2	10	7	8	3.2	⊗ sch. n, ⊗ tr. p.
4	15.6	17.0	18.0	6.1	9.3	15.3	13.4	7.4	7.2	7.8	86	56	69	SSW 0	SW 2	SSW 2	7	6	7	0.0	
5	17.9	17.6	17.0	9.3	13.4	16.9	14.9	8.6	9.3	10.8	75	65	86	SE 1	SSE 4	SSE 2	10	10	10		
6	16.0	15.9	16.1	12.2	15.1	15.4	15.4	11.2	9.7	7.5	88	75	58	E 1	SSW 5	SSW 3	4	9	10		⊗ tr. p.
7	20.1	19.9	20.1	11.3	12.6	19.6	17.4	10.3	12.2	10.7	96	72	72	N 2	N 2	N 2	8	8	3	0.5	⊗⁰ sch. n.
8	**22.9**	**22.9**	22.4	10.9	14.5	19.5	19.3	10.4	11.7	9.4	85	70	56	NNE 1	N 2	NW 3	2	1	1		
9	22.3	22.1	22.0	12.7	19.1	**24.8**	23.2	10.8	12.6	11.1	65	55	53	NW 0	N 1	NW 1	0	0	0		
10	22.6	21.9	21.8	12.9	16.9	22.6	19.2	11.8	**13.2**	7.0	83	65	43	N 1	WNW 1	NNW 2	0	3	0		
11	19.8	18.4	17.0	12.5	15.8	16.1	13.5	11.9	7.5	7.8	89	55	68	NW 1	NW 2	N 1	9	8	10		
12	14.8	13.4	11.8	8.7	9.4	12.3	10.7	8.2	7.0	7.6	93	66	79	N 2	WNW 2	WNW 3	9	9	10	2.0	⊗ sch. n, ⊗⁰ sch. a, p.
13	05.3	01.5	97.5	9.0	10.1	10.6	10.2	9.2	9.5	9.2	00	00	99	WNW 1	NW 1	NW 3	10•	10⊜	10•	12.4	⊗ n, a, p.
14	99.6	03.5	04.8	7.0	8.3	9.9	9.2	6.9	6.5	6.7	86	71	78	N 4	N 5	NNW 4	8•	9•	9	28.1	△⁰ sch., ⊗⁰ sch., ⊗ sch. n, ⊗⁰ sch. a, p.
15	07.0	05.2	03.8	7.2	9.2	10.0	9.3	6.6	6.6	8.7	76	72	00	0	SSE 3	SE 3	10	10•	10⊜	0.3	⊗⁰ sch. n, ⊗ tr. a, ≡ ⊗⁰ p.
16	98.8	96.4	**92.6**	8.6	9.2	10.7	10.1	8.7	8.3	8.7	00	87	95	S 3	SSW 2	W 4	10⊜	10•	9•	*10.4	⊗⁰, ⊗ n, ⊗⁰ a, ⊗, ⊗⁰ p.
17	99.1	00.4	98.1	5.8	6.5	6.8	6.6	**6.2**	6.5	7.1	86	88	98	NW 5	NW 4	NW 3	7	10•	10•	13.9	⊗ sch. n, ⊗⁰ sch. a, ⊗, ⊗⁰ p.
18	96.6	98.5	00.6	**5.5**	7.5	12.7	11.1	7.5	9.5	8.7	98	88	89	NNE 3	N 4	N 3	10•	9	8	9.4	⊗ sch. n, ⊗⁰ a.
19	04.7	05.2	05.4	7.5	10.8	13.2	10.9	8.7	9.0	7.9	90	80	82	N 3	NNW 3	NW 2	7	5	7	0.1	
20	01.8	00.3	98.6	8.1	8.3	9.5	8.5	8.2	8.9	7.8	00	00	94	NW 1	W 1	NW 3	10•	10⊜	10	1.5	⊗ n, ⊗⁰, ≡ ⊗⁰ a, ≡ ⊗⁰ p.
21	94.4	96.8	00.7	7.9	10.8	20.1	18.7	7.6	8.1	7.8	79	46	49	N 2	E 3	E 1	7	8	7	0.5	
22	06.5	07.1	07.4	10.8	14.7	19.5	16.4	8.4	9.7	10.9	68	57	78	N 1	W 2	N 0	2	6	5		⊗ tr. p.
23	10.3	09.7	09.2	12.3	16.9	21.2	19.8	8.0	9.5	10.8	56	51	62	NE 1	NW 1	N 2	8	7	4	0.0	
24	09.4	07.3	05.0	12.0	16.2	18.9	18.1	10.3	10.9	9.1	75	67	59	WNW 1	WNW 2	WNW 2	0	1	2		
25	03.7	03.4	03.1	10.9	12.9	15.1	12.4	7.5	8.2	7.2	68	64	68	N 3	N 2	NNE 3	7	3	3		Iris. Ci. Cu 3¹⁵ p.
26	99.7	98.6	98.6	8.3	10.5	16.3	14.6	7.0	7.5	7.6	74	55	61	N 2	NNW 4	N 4	4	3	3		
27	04.1	06.0	07.1	10.5	14.7	19.8	16.6	8.8	8.2	9.2	71	48	66	W 1	W 2	NW 2	1	2	0		
28	12.5	13.5	14.2	8.7	9.8	12.8	11.4	8.3	8.2	7.6	92	75	76	NNW 1	W 3	NNW 3	10	1	2		
29	14.9	14.8	15.4	8.7	12.0	14.5	13.2	8.9	9.5	8.7	86	77	77	NW 2	W 2	W 2	3	2	1		
30	16.3	16.7	16.6	8.9	13.0	17.3	16.5	9.3	10.7	10.0	85	73	71	NW 1	WNW 2	WNW 3	0	0	1		
M.	09.4	09.4	09.2	9.3	11.9	15.2	13.7	8.7	9.0	8.5	84	70	74	1.8	2.6	2.5	6.4	6.2	5.9	109.1	

$H = 43$ m, $H_b = 44.4$ m
$C_g = 1.35$ mb bei 1014 mb

$\varphi = 60^0\ 24'$ N
$\lambda = 5^0\ 19'$ E

Juli.

Datum.	Luftdruck. 900 oder 1000 + 8	2	7	Luft-Temperatur. Min.	8	2	7	Absolute Feuchtigkeit. 8	2	7	Relative Feuchtigk. 8	2	7	Richtung und Stärke des Windes. 8	2	7	Bewölkung. 8	2	7	Niederschl.	Bemerkungen.
1	17.0	16.3	16.0	10.4	11.1	21.8	17.3	9.9	9.8	12.0	00	51	82	W 1	SSW 3	NW 1	10≡	7	7		≡⁰ n, a, ⊕ H.
2	13.7	11.9	11.2	11.1	19.3	**27.9**	20.5	11.1	10.6	9.8	66	38	54	NW 1	SE 2	SSE 2	3	6	8		
3	11.8	10.2	09.6	13.8	17.1	24.2	21.1	10.3	7.4	10.6	71	33	57	SW 1	NNW 2	NW 2	7	6	2		
4	07.6	07.8	08.0	15.7	17.9	20.6	18.4	11.8	10.3	10.8	77	57	68	SE 1	SSW 4	SSW 3	7	6	8	0.0	◍ tr. n, ◍⁰ sch. a.
5	08.7	08.4	07.0	13.9	16.6	18.8	19.1	12.7	12.4	11.3	91	77	69	NE 1	NW 2	NW 2	3	3	3	0.0	
6	03.3	02.5	04.1	14.4	17.1	19.7	14.0	12.3	12.6	11.2	85	74	95	WNW 1	WNW 2	W 2	2	3	10		
7	04.8	04.5	04.3	13.4	14.9	17.2	15.0	10.5	10.8	11.2	84	74	88	SW 1	WNW 2	W 2	7	7	10		
8	06.3	08.3	08.4	11.2	12.4	14.4	13.6	9.5	8.0	7.7	89	65	67	WNW 2	W 3	WNW 3	9	4	3	8.8	◍ sch. n.
9	07.0	06.7	06.6	10.7	11.5	15.2	13.4	8.6	7.9	7.8	86	61	69	SW 0	WNW 2	W 2	9•	7	5	0.3	◍⁰ sch. n, a.
10	04.3	04.1	04.5	11.3	12.5	14.0	13.2	8.0	7.6	7.8	75	64	69	N 0	WNW 2	W 1	8	8	9	0.5	
11	09.2	12.9	14.6	10.3	11.6	13.4	12.9	8.9	7.7	**7.0**	88	67	64	NNW 3	NW 0	NNW 1	10	9	9	0.1	◍⁰ sch. n, ◍ sch. a.
12	17.3	18.2	19.3	**9.9**	13.1	17.2	15.2	8.5	10.5	10.8	76	72	84	NW 0	W 2	W 1	6	9	9	0.2	
13	**21.6**	21.3	19.5	13.1	15.6	19.1	17.4	11.2	10.3	8.7	85	63	59	NNW 1	W 2	NNW 2	4	8	7		⊕ p.
14	18.4	16.2	15.6	14.1	16.6	20.4	18.0	10.1	11.9	9.5	71	67	62	S 1	SSW 4	SSW 5	9	2	2	0.0	◍ tr. n.
15	13.2	13.8	12.7	16.5	16.8	16.2	17.4	9.5	10.6	9.8	67	77	67	S 5	SSE 4	SSE 4	9	9	9		◍⁰ sch. a, p.
16	11.7	10.0	09.3	14.0	16.9	21.8	20.2	10.8	9.1	9.8	76	47	55	SE 1	SSW 5	S 2	9	3	4	2.8	
17	08.4	06.4	05.5	16.0	16.6	19.8	18.4	11.9	11.5	10.9	84	67	69	W 1	W 1	SSE 2	10	10•	10•	0.1	◍⁰ sch. n, ◍ tr. a, ◍⁰ sch. p.
18	04.6	05.0	06.8	15.5	18.0	24.4	21.6	12.0	10.2	12.5	78	40	66	W 1	SSE 3	0	8	8	9	2.4	◍⁰ sch. n, p.
19	09.1	11.2	10.7	16.5	19.0	24.8	24.6	12.0	10.0	11.3	74	43	49	W 0	SSE 4	W 1	8	9	9	0.3	◍⁰ sch. n, ◍ tr. p.
20	15.2	16.5	16.7	17.6	20.2	25.0	23.0	12.6	13.0	12.9	72	56	62	NNW 1	N 2	W 1	0	1	0	0.0	
21	17.4	18.1	18.3	17.3	21.4	27.5	24.6	13.3	11.8	8.6	70	43	37	SE 1	S 1	SSW 4	0	0	0		
22	18.7	18.2	17.3	19.6	24.6	26.3	24.2	9.3	11.4	9.7	41	45	44	SSE 3	SSW 3	S 3	3	7	8		
23	14.7	14.8	13.9	21.1	24.8	26.9	25.0	10.3	9.9	11.7	45	38	50	SSE 2	SSW 3	SSW 1	2	1	2	0.0	◍ tr. n.
24	14.3	13.5	12.1	18.1	20.2	20.8	19.8	**14.5**	13.8	12.7	83	76	74	NW 1	NW 2	N 3	9	8	1		
25	08.4	07.2	06.0	15.8	18.5	25.6	25.7	13.2	12.3	9.1	83	50	38	0	SSW 3	S 2	4	1	8		
26	02.2	99.1	97.7	18.2	21.6	26.4	23.3	9.8	11.5	12.1	51	46	57	S 5	WNW 1	S 1	9•	5	9	0.0	◍ tr. n, ◍⁰ sch. a.
27	96.1	97.9	97.9	17.6	19.6	19.7	17.4	13.8	12.2	12.8	81	71	87	SSE 2	S 2	WNW 1	9	9	10	0.9	◍⁰ sch. n, ◍² sch., ◍⁰ sch. a, ◍⁰ sch. p.
28	96.9	96.5	96.1	14.2	15.7	16.9	15.3	11.0	11.5	11.7	83	81	90	W 1	NW 1	NW 1	9	10	9	14.2	◍ n, ◍⁰ sch. p.
29	95.5	95.4	95.8	13.0	15.0	18.6	16.7	11.9	11.1	10.5	93	70	74	0	W 1	N 2	7	8	6	2.1	⊼, ◍⁰ sch. p.
30	94.9	94.8	94.1	12.9	14.8	15.0	14.6	10.6	10.6	10.7	85	84	87	SSE 2	SE 1	S 1	9	9•	7	0.9	◍⁰ sch. n, ◍ sch., ◍⁰ sch. a, ◍⁰ sch. p.
31	92.8	93.0	**92.3**	13.1	13.9	16.3	16.0	10.6	9.7	11.0	91	70	81	0	W 1	NNE 1	9	9	9	9.9	◍⁰ sch. n, a, p.
M.	08.6	08.4	08.1	14.5	16.9	20.5	18.6	11.0	10.6	10.5	77	60	67	1.3	2.3	1.9	6.7	6.2	6.5	43.5	

August.

Datum.	Luftdruck. 8	2	7	Luft-Temperatur. Min.	8	2	7	Absolute Feuchtigkeit. 8	2	7	Relative Feuchtigk. 8	2	7	Richtung und Stärke des Windes. 8	2	7	Bewölkung. 8	2	7	Niederschl.	Bemerkungen.
1	**91.6**	92.0	92.3	12.3	15.7	15.8	15.7	10.1	11.1	10.9	76	83	82	SE 1	W 1	N 1	6	9•	7	1.4	◍⁰ sch. a, ◍² sch., ◍⁰ sch. p.
2	92.7	93.0	94.4	11.7	14.1	18.9	17.2	11.4	11.3	11.2	96	70	77	NNE 1	N 3	NNW 3	9	5	8	16.4	⊼ n.
3	98.2	00.0	01.6	14.1	15.6	17.8	15.6	11.5	11.6	10.9	87	76	83	SE 2	W 3	NW 1	9•	7	9	0.2	◍⁰ sch. n, a, p.
4	02.6	02.7	01.6	13.0	14.0	14.1	13.2	10.4	10.5	10.8	88	88	96	NNW 1	W 3	W 1	10	9•	9	1.2	◍⁰ sch. n, a, p.
5	98.8	97.7	97.4	12.4	13.9	17.9	16.8	10.4	10.6	11.0	88	69	77	SSE 2	W 2	W 2	9	5	2	3.7	◍⁰ n, ◍⁰ sch. a.
6	99.9	01.3	02.8	13.1	14.4	19.2	17.5	11.9	11.3	9.2	98	68	62	WNW 2	NW 2	NNW 1	9•	2	1	3.3	◍⁰ sch. n, a.
7	05.8	08.6	09.5	13.5	14.8	17.1	17.2	12.0	12.0	11.6	96	83	80	SSW 3	NW 1	NW 0	9	9	5	6.9	◍ sch. n, ◍ tr. p.
8	09.6	09.8	09.9	13.1	16.0	19.4	16.8	10.4	9.3	12.0	77	55	84	0	SSW 3	SSW 1	9	9	10•	0.0	◍⁰ p.
9	09.4	06.6	02.4	14.2	16.8	19.3	15.7	10.8	10.1	11.3	76	61	85	SSE 3	SSE 4	S 3	9	10	10•	7.3	◍, ⊼ n, ◍⁰ p.
10	02.6	03.0	02.3	15.1	16.9	18.8	17.3	12.0	8.7	9.8	84	54	67	SSE 4	S 4	SSW 3	8	3	2	9.6	◍ n.
11	99.3	00.5	02.9	13.7	13.7	14.3	14.6	11.0	10.9	9.9	95	91	81	SSE 2	S 2	W 2	10•	10•	9	7.0	◍, ⊼ n, ◍² sch. a, ◍⁰ sch. p.
12	10.4	09.7	07.6	11.2	13.4	16.3	14.6	9.2	**7.2**	11.3	81	53	91	SE 3	S 3	SSE 5	3	10	10•	22.1	◍ n, p.
13	07.3	07.8	09.5	13.4	14.7	16.0	15.6	12.2	**13.4**	12.3	98	99	93	SSE 4	S 5	SSW 3	10•	10•	10	35.6	◍⁰, ◍ n, ◍ a, p.
14	14.4	16.2	**16.5**	10.9	11.4	13.1	11.6	8.6	7.6	9.2	86	68	91	0	WNW 3	N 2	6	9	9	29.7	◍⁰ sch. n, a, p.
15	16.1	15.6	14.2	10.4	11.4	12.9	12.7	8.6	8.3	8.0	86	75	74	NNE 4	NNW 3	N 2	10	9	6	2.1	◍⁰ sch. n, a, p.
16	12.8	11.5	09.4	9.9	11.8	13.0	11.9	8.3	10.1	10.4	81	91	00	0	ESE 1	WNW 2	9	10•	10•	1.0	≡ ◍⁰ a, ≡ ◍ p.
17	03.5	03.0	02.7	11.4	12.2	16.9	15.0	10.3	10.6	9.6	98	74	75	NW 2	NNW 3	N 2	10•	5	4	13.7	◍, ≡ ◍⁰ n, ≡ ◍⁰ a.
18	03.4	02.3	01.5	12.2	12.8	15.2	14.8	9.1	9.6	9.8	83	74	78	NNW 5	N 5	NNE 4	9	6	8	0.2	
19	01.5	02.4	02.5	11.7	13.2	18.4	16.6	9.1	10.5	10.1	81	66	71	N 0	SSW 4	SSW 2	5	4	2		
20	02.9	02.6	02.0	11.9	14.1	17.3	14.9	10.0	10.0	10.3	84	68	82	ESE 1	SSW 2	W 1	3	6	7		
21	01.6	02.4	03.6	12.3	12.7	14.9	13.9	10.3	9.1	8.5	95	72	72	SE 1	SSW 3	SSW 2	10	9	8	0.0	◍⁰ sch. n, ◍ tr. a.
22	05.9	06.4	06.5	12.4	13.5	17.3	16.2	9.9	10.0	10.6	87	68	77	SE 1	SSW 1	WNW 1	5	9	7	0.0	
23	05.8	06.1	05.3	13.5	17.0	20.6	20.6	10.5	10.7	8.7	73	59	48	W 0	ESE 0	SE 2	9	10	8		
24	05.6	05.0	04.4	15.2	16.2	19.2	16.7	10.2	10.3	12.2	74	62	86	SW 1	SE 1	NW 1	10•	9	9	1.7	◍⁰ n, ◍⁰ sch. a, p.
25	03.5	04.7	06.8	15.0	17.7	19.8	16.4	9.4	10.1	11.7	62	58	84	E 3	N 1	S 1	10	10	10•	0.1	◍⁰ p.
26	08.5	08.3	09.6	14.8	16.5	**21.1**	16.1	11.6	8.6	11.0	83	46	81	0	SSW 3	SSE 2	10	7	10	0.4	◍⁰ n.
27	07.8	06.2	05.1	14.1	15.9	15.5	13.4	8.2	9.0	10.9	61	68	96	SSE 3	SSE 4	SSE 4	10	10	10•	1.6	◍⁰ n, ◍⁰ sch. a, ◍ p.
28	06.6	08.3	07.5	11.8	12.1	14.9	13.2	10.4	9.9	8.3	99	78	74	SE 1	W 2	SSE 3	9	6	9	15.4	◍ n, ◍ sch. a.
29	98.9	98.3	96.4	11.4	12.6	13.2	11.9	8.8	9.3	9.6	82	83	94	NNW 2	SW 6	WSW 2	9	10•	10•	15.8	◍ n, ◍ sch. a, ⸝ böen SSW, ◍ sch. p.
30	05.1	09.0	10.4	10.2	10.9	11.8	9.9	9.3	8.2	8.9	97	80	98	NW 4	NNW 4	NNW 2	10•	10	8	21.2	◍² sch. n, ◍ sch. a, ◍⁰ sch. p.
31	05.1	01.6	99.8	**9.0**	10.0	11.5	10.2	8.8	9.7	8.1	96	97	87	SSE 4	W 1	SSE 3	10•	10•	9	8.1	◍⁰ sch. n, ◍, ◍⁰ a, ◍ sch. p.
M.	04.4	04.6	04.5	12.5	14.1	16.5	15.0	10.2	10.0	10.3	85	72	81	1.9	2.7	2.1	8.5	8.0	7.6	225.7	

$H = 43$ m, $H_b = 44.4$ m

$C_g = 1.35$ mb bei 1014 mb

$\varphi = 60^0\ 24'$ N

$\lambda = 5^0\ 19'$ E

September.

Datum.	Luftdruck, 900 oder 1000 + 8	2	7	Luft-Temperatur. Min.	8	2	7	Absolute Feuchtigkeit. 8	2	7	Relative Feuchtigk. 8	2	7	Richtung und Stärke des Windes. 8	2	7	Bewölkung. 8	2	7	Niederschl.	Bemerkungen.
1	92.5	92.1	91.6	8.9	10.0	11.5	9.5	7.7	8.4	8.0	84	83	91	SSW 3	WSW 4	NW 2	10	9	7	17.5	⊗ sch. n, a, p.
2	89.9	90.6	90.5	9.2	10.0	10.1	9.4	8.2	8.5	8.4	89	92	96	NW 5	NW 4	NW 2	8	10•	10•	17.5	⊗ sch. n, a, p.
3	87.3	88.8	91.0	8.3	8.8	11.1	9.9	8.5	8.4	8.3	00	85	91	SE 2	NNW 2	N 4	10•	9	9•	25.0	⊗ sch. n, a, p.
4	91.1	90.3	87.3	7.7	8.6	8.4	9.6	7.8	7.9	8.9	93	96	00	NW 3	WNW 2	N 2	10	10•	10•	10.1	⊗ sch. n, ⊗⁰ sch. a, ⊗², ⊗ p.
5	87.8	88.6	89.6	8.1	10.2	12.8	12.3	8.6	8.7	8.8	93	80	83	NNW 2	NNW 3	N 4	10•	6	5	21.9	⊗² sch., ⊗⁰ sch. n, ⊗⁰ sch. a, p.
6	94.4	94.3	95.4	9.7	10.8	11.1	11.5	8.2	9.6	9.2	85	98	92	N 3	NW 5	N 3	10	10	10	2.3	⊗⁰ sch. n, ⊗, ⊗⁰ a, ⊗⁰ sch. p.
7	97.6	98.3	98.7	9.5	11.0	12.9	12.1	9.2	9.8	9.1	94	89	88	NNE 2	N 3	N 2	8	5	5	5.7	⊗⁰ sch. a.
8	00.4	00.3	00.2	6.9	7.2	15.4	11.0	7.6	9.4	8.3	00	72	85	SW 0	NW 1	NW 2	10≡	5	6	0.5	≡ n, a, ⊗² sch. p.
9	99.2	00.0	01.6	7.2	8.3	15.7	10.7	8.1	9.9	9.0	99	75	94	0	N 1	NW 1	7	6	8•	6.9	⊼ n, ⊼ 4 p, ⊗⁰ sch., △ sch. p.
10	02.9	03.3	04.1	7.7	8.9	16.5	14.4	8.2	8.1	6.6	96	58	54	0	NW 1	E 3	4	3	7	2.0	⊗⁰ sch. n, p.
11	06.4	07.7	08.5	8.9	10.4	16.4	14.8	8.0	8.6	6.4	85	61	51	S 0	W 2	N 0	6	4	8	0.0	⊼⁰ p.
12	13.8	15.0	15.7	7.9	8.4	15.2	12.4	7.5	7.9	9.3	92	61	88	0	WNW 3	NW 2	0	2	1		⊼ n.
13	18.9	**20.0**	19.7	7.5	8.9	12.9	10.8	8.3	7.4	7.3	98	67	75	NW 1	W 2	W 0	8	8	8		⊗⁰ a, p.
14	17.4	16.3	16.0	7.9	10.6	12.6	11.6	7.5	8.3	9.7	79	77	96	SSE 4	S 5	SSE 4	9	10•	10		⊗⁰ n, ⊗⁰ sch. a, ⊗ tr. p.
15	17.3	17.7	16.6	10.6	12.4	14.9	13.6	10.2	10.7	**11.3**	95	85	98	SSE 2	SSE 1	SE 2	10	10	10	4.0	⊗⁰ n.
16	13.8	12.4	10.9	11.8	12.6	15.6	13.4	9.6	8.5	7.8	89	64	69	SSE 2	SSE 2	S 3	10	10	10	2.4	⊗⁰ n.
17	08.7	07.8	06.2	10.2	11.1	**16.8**	14.8	8.5	**5.1**	6.6	86	35	53	W 1	SSE 2	0	10	9	8		⊗⁰, ⊗ a, p.
18	03.5	04.2	02.5	11.1	12.3	11.3	10.5	6.6	8.3	9.1	62	83	96	SSE 1	S 2	SSE 2	10	10•	10		⊗⁰, ⊗ a, p.
19	03.8	03.4	00.1	10.2	10.6	14.7	12.2	9.0	7.9	9.6	95	63	91	SSW 1	SSE 3	0	5	5	10	14.7	⊗ sch. n.
20	80.3	83.5	87.5	10.3	16.7	10.7	11.8	7.2	8.4	8.1	51	89	78	SE 4	S 5	S 6	10	10•	10	1.8	⊗, ⊗⁰ n, ⊗, ⊗⁰, ⊼ a, ⊗, ⊗⁰, ⸗ böen S p.
21	88.9	86.3	84.0	8.6	10.1	10.3	8.7	7.7	8.3	7.6	83	89	91	SSE 4	S 3	SSE 3	8	10•	10	23.5	⊗² sch. mit △, ⊼ n, ⊗⁰ a, ⊗⁰ sch. p.
22	88.0	91.0	90.6	8.5	10.3	11.1	10.1	8.4	7.1	7.7	90	72	83	WSW 3	S 6	SSE 4	9•	9•	10	15.4	⊗ sch. n, ⊗⁰ sch. a, ⊗ sch. p.
23	75.5	**72.5**	78.9	9.4	13.2	11.0	10.5	7.0	8.6	9.5	62	87	00	SSE 3	ESE 5	WSW 2	9•	10•	10•	9.9	⊗ n, ⊗⁰ a, ⊗ sch., ⸗ böen SSW p.
24	90.8	93.5	97.6	8.5	8.8	10.8	10.2	7.6	9.0	8.3	91	94	90	SSE 2	SSW 3	SSW 3	10•	8	7	16.3	⊗² sch., ⊗⁰ sch. n, ⊗ sch. a, ⊗⁰ sch. p.
25	02.3	03.5	03.4	8.6	8.8	11.7	10.0	8.3	7.8	7.7	99	76	84	SSE 2	SSE 4	SSE 2	6	5	9	14.8	⊗ sch. n, ⊗⁰ sch. a, p.
26	02.8	03.3	04.0	8.3	8.7	11.8	9.9	7.9	8.2	8.4	95	80	92	SE 2	W 1	NW 1	4	8•	10	3.5	⊗ sch. n, ⊗ tr. a, p.
27	07.6	10.5	13.0	8.2	8.5	11.4	9.0	7.5	7.4	7.6	91	73	89	N 1	NNW 3	NNE 3	6	7	2	0.0	⊗⁰ sch. p.
28	15.1	14.0	12.4	**5.8**	6.3	11.0	9.9	6.5	5.8	6.8	91	59	74	0	SSW 3	S 5	7	8	10	0.1	⊗ tr. p.
29	04.6	08.0	11.8	6.3	11.8	10.5	9.7	10.3	9.3	8.1	00	99	91	SSW 3	E 1	NNW 1	10≡	10	8	23.5	⊗, ⸗ böen SSE n, ≡ ⊗ a.
30	17.8	18.4	18.4	6.7	7.5	10.9	10.1	7.0	7.0	8.1	90	71	88	SSE 2	S 3	SSE 3	4	10	10	7.6	⊗⁰ sch. n, p.
M.	00.7	01.2	01.6	8.6	10.1	12.6	11.1	8.1	8.3	8.3	89	77	85	1.9	2.8	2.4	7.9	7.9	8.3	246.9	

Oktober.

Datum.	Luftdruck, 900 oder 1000 + 8	2	7	Luft-Temperatur. Min.	8	2	7	Absolute Feuchtigkeit. 8	2	7	Relative Feuchtigk. 8	2	7	Richtung und Stärke des Windes. 8	2	7	Bewölkung. 8	2	7	Niederschl.	Bemerkungen.
1	17.4	19.7	19.7	7.4	11.0	11.9	11.0	9.8	9.8	9.8	00	95	00	S 4	WSW 2	S 2	10≡	10	10≡	8.4	⊗ n, ⊗, ≡ ⊗⁰ a, ≡ ⊗⁰ p.
2	12.8	16.8	15.0	9.8	11.6	11.4	10.0	**10.1**	8.3	8.0	99	83	87	W 4	NW 1	SSE 3	10•	9	10≡	29.5	≡ ⊗⁰, ⊗ n, ⊗⁰ a, ≡ ⊗⁰ p.
3	05.0	06.8	09.4	8.1	8.1	8.5	6.8	8.1	7.8	5.7	00	94	77	N 1	N 2	N 3	10•	10	10	42.6	⊗, ⊗² n, ⊗, ⊗⁰ sch. a, ⊗⁰ sch. p.
4	16.9	18.2	16.3	3.6	4.4	6.8	7.3	5.4	6.5	6.7	87	88	88	SE 1	SSE 0	SSW 1	7	9	10	7.4	⊗⁰ sch. n, ⊗ sch. a, p.
5	14.9	17.9	18.0	4.2	6.8	8.5	5.8	5.8	4.8	5.2	78	58	76	NNE 3	NNE 3	SE 1	8	5	4	9.6	⊗ n.
6	06.3	05.5	04.2	5.3	8.3	10.9	8.5	8.2	9.7	7.9	00	00	96	ESE 2	W 2	WNW 2	10•	10•	10	9.1	⊗ n, ≡ ⊗ a, ⊗⁰ sch., ⊗ sch. p.
7	10.9	14.1	16.0	4.1	4.5	6.1	4.7	5.8	5.5	5.5	92	78	86	NNE 5	NNE 2	NNE 2	7•	9•	4	10.3	⊗⁰ sch. n, a, p.
8	**20.2**	**20.2**	19.9	1.7	2.0	7.0	5.8	5.2	5.4	5.8	98	72	85	SE 0	0	SSE 3	2	10	10•	1.3	⊗⁰ sch., ⊔ n, ⊗⁰ p.
9	15.8	15.4	14.7	2.0	8.8	8.8	9.0	8.1	8.5	8.6	96	00	00	0	WNW 2	WNW 3	10≡	10≡	10≡	17.7	⊗⁰, ⊗ n, ≡ ⊗⁰ a, p.
10	11.4	12.7	12.4	6.8	6.8	5.9	4.3	6.7	5.0	4.5	91	72	73	NNE 3	NNE 4	NNE 3	10	10	10	15.5	⊗⁰, ⊗ n.
11	12.2	10.3	06.2	1.0	2.0	3.0	2.6	4.2	4.8	4.9	78	85	89	NW 2	0	SE 1	8	10*	10	1.2	⊗ ✱⁰, ✱⁰ sch. n, ✱⁰ sch. a, ⊗⁰ sch. p.
12	03.4	03.3	02.3	0.2	0.7	4.5	2.5	4.5	5.4	4.9	92	86	89	NW 1	NNW 0	NNW 2	3	8	10•	2.9	✱⁰ sch. n, ✱⁰ sch., ⊗ ✱⁰ sch. p.
13	93.5	90.8	90.3	0.2	0.6	2.1	0.8	4.8	4.8	4.2	00	89	86	SW 0	NNW 2	N 2	10*	10	2	5.1	✱⁰, ✱ sch. n, ✱⁰ sch. a.
14	95.0	96.9	99.6	0.2	1.1	3.6	1.6	3.1	3.9	3.0	62	65	57	N 2	N 3	NNE 3	2	1	0	0.7	
15	03.7	04.0	02.6	-2.7	-2.2	2.0	0.8	**2.8**	4.2	4.9	72	78	00	SW 0	SSE 1	SE 2	4	10	10*		✱ sch. a, ✱, ⊗ ✱⁰ p.
16	05.9	06.5	07.2	**-2.9**	0.1	2.2	1.0	4.7	5.1	5.0	00	95	00	E 0	W 1	SE 0	10*	9	10	4.6	✱⁰ sch. n, ✱ sch. a, ✱ sch., ⊗ ✱⁰ sch. p.
17	04.7	01.7	98.6	-1.1	-1.1	2.4	1.5	3.9	4.7	4.4	92	86	85	SE 1	W 1	W 0	10	9	10	9.7	✱ sch. n.
18	01.7	05.1	07.4	-1.5	-0.6	6.3	1.1	3.3	3.1	3.6	74	44	71	0	W 1	S 1	0	1	0		
19	10.5	12.1	13.6	-2.7	-2.7	3.0	0.5	3.0	3.4	3.6	81	60	75	0	0	0	2	0	0		
20	12.4	09.9	06.5	-2.8	0.6	5.8	4.0	3.7	3.9	3.9	77	57	64	SSE 2	SSE 3	SE 2	6	5	2		
21	96.8	94.5	90.9	0.6	3.9	5.2	5.6	4.0	4.5	4.7	66	68	70	S 0	W 1	W 0	10	10	10		
22	85.6	83.3	81.4	3.5	6.5	8.5	8.9	7.0	6.7	6.8	98	81	80	W 1	NW 1	NW 1	10•	10	10•	13.0	⊗ n, a, ⊗⁰ sch. p.
23	74.2	72.6	**70.7**	6.3	13.0	12.8	**13.7**	6.4	7.3	5.6	57	67	48	SE 3	SE 4	SE 4	10	10•	6	3.6	⊗⁰ n, ⊗⁰ a, p, ⸗ böen SSE spätabd.
24	74.6	76.0	78.5	10.6	12.7	12.1	10.2	6.3	6.7	8.3	58	64	90	SSE 4	SSE 5	SE 2	10	10•	10•	3.0	⊗ sch. n, ⊗⁰ sch. a, ⊗⁰, ⊗ p.
25	83.6	87.1	89.2	10.0	10.4	10.9	9.9	8.0	7.9	8.3	85	82	91	SSE 4	SSE 4	S 4	10	10	10•	4.0	⊗ sch. n, a, ⊗⁰ p.
26	94.0	95.2	92.8	9.1	9.7	10.9	10.8	7.8	8.0	7.0	87	83	72	SSE 4	S 3	S 5	10	7	8	12.2	⊗, ⊗² n, ⊗ sch. a.
27	89.1	88.3	87.7	9.5	10.9	12.8	9.8	6.5	5.8	7.0	68	53	78	SSE 3	SSE 4	SSE 4	2	10	10•	1.2	⊗⁰ sch. n, ⊗⁰ p.
28	86.2	93.3	96.9	8.6	8.9	9.0	8.1	8.3	7.6	7.8	98	89	98	SSE 3	WSW 3	S 3	10•	10	10•	10.7	⊗, ⊗⁰ n, ⊗ sch. a, ⊗ p.
29	99.3	95.9	98.2	7.6	8.3	9.3	9.5	7.0	7.6	8.9	87	88	00	SSE 4	SSE 5	SSE 3	10	10≡	10	10.9	⊗ sch. n, ⊗⁰ a, ⊗⁰, ⊗ p.
30	03.9	06.0	08.0	8.2	8.7	8.9	10.1	8.2	8.5	8.9	98	00	96	W 1	S 1	SSE 3	10•	10≡	10≡	2.2	⊗⁰ n, ≡ ⊗ a, ≡ ⊗⁰ p.
31	10.1	11.4	13.3	7.1	8.1	10.8	9.4	7.7	7.8	8.6	96	82	98	W 1	WSW 1	NW 1	10	9	10•	6.0	⊗⁰ n, ⊗⁰ sch. a, ⊗ sch. p.
M.	02.3	03.0	02.8	3.9	5.5	7.5	6.3	6.1	6.2	6.2	86	79	84	1.9	2.0	2.1	7.8	8.4	7.9	242.4	

$H = 43$ m, $H_b = 44.4$ m
$C_g = 1.35$ mb bei 1014 mb

$\varphi = 60^0\ 24'$ N
$\lambda = 5^0\ 19'$ E

November.

Datum.	Luftdruck. 900 oder 1000 + 8	2	7	Luft-Temperatur. Min.	8	2	7	Absolute Feuchtigkeit. 8	2	7	Relative Feuchtigk. 8	2	7	Richtung und Stärke des Windes. 8	2	7	Bewölkung. 8	2	7	Niederschl.	Bemerkungen.
1	13.5	12.6	12.5	7.9	8.6	8.3	8.0	8.3	8.2	7.8	00	00	98	WNW 0	W 1	SSE 3	10●	10	10●	9.4	◍ n, a, p.
2	09.2	07.8	06.9	7.2	7.4	**10.2**	8.8	6.2	5.9	5.2	80	64	62	W 0	SSE 1	SSE 3	9	6	10●	31.8	◍ n, ◍⁰ p.
3	01.7	99.0	95.5	5.6	7.1	10.3	7.9	6.3	5.4	6.7	84	58	85	NE 1	SSE 2	W 1	10	9	10	3.9	◍⁰, ◍ n, ◍⁰ sch. p.
4	90.7	94.5	96.9	5.1	5.1	7.1	6.5	5.4	6.3	6.3	83	84	87	NW 0	NNW 0	NW 1	2	10	10	0.6	◍ sch. n.
5	96.8	97.0	96.5	4.5	4.5	5.9	2.7	5.0	4.3	5.3	79	62	94	N 1	N 2	NW 0	10	8	9		◍⁰ sch. p.
6	95.3	95.7	95.4	1.2	2.8	4.8	2.6	5.3	4.1	4.5	94	64	81	N 3	NNW 4	NNW 2	10	7	10	3.5	◍⁰, ◍ ✱⁰, ✱⁰ n, ◍ ✱⁰ a, Nebensonne II,
7	94.9	93.9	93.5	-1.8	-1.8	2.4	-0.9	3.8	3.0	2.9	94	56	67	SE 0	SW 1	SSW 1	1	0	0	4.6	✱ sch. n. △⁰ p.
8	93.3	93.7	94.2	-3.7	-3.4	0.5	-2.4	2.8	3.1	3.0	80	66	77	0	W 0	0	4	7	0		
9	94.6	95.2	96.8	-5.2	-4.9	0.8	-2.1	2.4	3.1	2.8	75	63	72	SE 0	S 1	0	1	3	2		
10	02.9	06.7	10.3	**-5.3**	-3.5	2.2	-2.3	2.5	2.3	2.3	69	43	59	SW 1	NE 1	S 1	0	1	0		♖ spätabd.
11	17.7	21.4	23.6	-3.9	-1.1	3.4	1.0	3.7	4.1	4.2	87	70	85	S 1	SSE 2	SSE 2	2	7	10	0.0	✱⁰ sch. n.
12	24.6	24.1	23.2	-1.5	2.9	5.3	5.4	5.1	5.8	6.0	90	87	89	SSE 4	SSE 4	SSE 3	10	9	8	0.3	◍⁰ sch. n, a.
13	19.8	17.5	15.2	2.7	4.8	6.5	4.2	5.4	5.1	4.8	84	71	77	SSE 3	SSE 3	SE 2	10	2	3	0.0	
14	11.2	10.8	11.2	2.3	2.3	4.6	2.6	4.2	4.6	4.4	77	73	79	SSE 1	SW 0	S 1	6	7	0		
15	12.4	13.0	13.4	2.1	3.7	5.1	4.5	4.4	4.9	5.0	73	75	79	SE 2	SSE 4	ESE 2	7	10	10●		◍⁰ a, p,
16	11.9	14.0	17.9	3.5	5.0	5.7	3.3	5.3	6.0	5.3	81	88	92	S 6	N 1	SSE 0	10●	8	4	0.7	◍⁰ n, ◍ a, ◍ sch. p.
17	26.1	28.8	30.3	2.3	3.6	5.5	3.1	5.2	5.8	5.3	88	86	93	SE 2	SW 1	SE 2	10●	10	0	15.3	◍⁰ sch. n, a.
18	**30.5**	**30.5**	30.2	2.3	5.0	5.7	5.7	5.2	5.5	5.9	80	80	86	SSE 3	SSE 3	SSE 3	10	9	10	0.2	◍⁰ sch. a, p.
19	26.4	23.2	20.4	4.9	6.7	7.5	8.6	6.2	6.6	7.5	84	86	91	S 3	S 2	WSW 3	10	10	10●	0.0	◍⁰ sch. n, a, ≡ ◍⁰ p.
20	15.3	15.1	14.9	6.5	8.4	8.8	8.0	8.1	**8.5**	8.0	99	00	00	W 3	WNW 1	0	10●	10●	10●	3.7	≡ ◍⁰ n, a, p.
21	11.2	10.2	08.7	8.0	8.0	8.3	8.5	8.0	8.2	7.8	00	00	94	WNW 4	WNW 3	WNW 3	10●	10●	10	23.0	◍, ≡ ◍⁰ n, ≡ ◍⁰ a, p.
22	02.8	97.9	96.3	6.3	6.5	5.2	5.6	6.4	5.9	5.8	88	89	85	S 2	W 3	NW 3	10	10●	9	1.8	◍⁰ n, ◍⁰, ◍ a, ◍⁰ sch., ◍⁰ sch. mit △⁰ p.
23	04.7	05.8	06.3	2.2	3.2	2.4	0.7	4.2	5.0	4.5	73	91	92	NNE 3	0	SE 1	7	5	7	9.5	◍⁰ sch. n, ✱ sch. a, ✱⁰ sch. p.
24	01.8	02.1	99.9	-0.6	0.1	0.0	-1.5	3.4	3.8	3.9	74	83	95	NNE 4	0	SSE 2	3	5	10	4.6	✱⁰ sch. n, a, ✱ sch. p.
25	99.2	03.7	06.6	-2.4	-1.2	0.4	-1.3	2.7	3.3	2.8	74	69	68	NNE 4	NNE 3	N 2	2	3	1	3.5	✱⁰ sch. n.
26	07.7	01.6	92.5	-3.8	-2.3	-1.6	1.3	2.4	4.0	4.9	63	99	96	SE 2	SSE 5	SE 3	10	10✱	10		✱⁰ a, ✱ p.
27	**85.6**	87.4	88.1	-2.3	-1.5	-1.4	-1.8	3.9	2.9	2.6	95	71	64	SE 1	NNE 3	N 1	9	1	0	13.9	✱, ✱⁰ n, ✱ a.
28	87.3	91.6	96.8	-3.8	-3.3	-0.7	0.7	2.2	**2.1**	2.4	61	49	49	S 2	NE 3	ENE 6	0	7	5	1.4	
29	01.6	01.0	99.8	**-5.3**	-2.0	-1.7	-1.9	2.4	2.4	2.3	60	59	58	SE 2	SSE 3	SSE 3	9	10	10		
30	03.4	04.8	04.5	-2.4	-2.4	-1.0	-1.3	2.7	3.4	3.6	70	80	86	0	SW 1	SW 1	9	10	10✱		✱⁰ sch. p.
M.	06.5	06.7	06.6	1.1	2.3	4.0	2.8	4.6	4.8	4.8	81	76	81	1.9	1.9	1.8	7.0	7.1	6.6	131.7	

December.

Datum.	Luftdruck. 900 oder 1000 + 8	2	7	Luft-Temperatur. Min.	8	2	7	Absolute Feuchtigkeit. 8	2	7	Relative Feuchtigk. 8	2	7	Richtung und Stärke des Windes. 8	2	7	Bewölkung. 8	2	7	Niederschl.	Bemerkungen.
1	03.9	04.5	05.4	-5.1	-4.8	-2.8	-3.7	3.0	3.4	3.2	93	91	93	SW 1	N 1	WSW 1	0	6	6	0.0	✱⁰ n.
2	06.9	08.6	10.9	-4.9	-4.6	-2.4	-3.0	3.1	2.7	2.9	94	71	78	SW 1	W 1	SW 1	2	4	3		
3	17.3	20.2	23.2	-6.1	-5.8	-0.6	-1.0	2.7	2.3	2.5	90	53	59		0	SSE 1	SE 2	8	10		
4	**25.6**	25.4	25.0	-6.1	1.2	2.0	2.7	4.3	5.0	5.4	86	94	96	SE 3	SE 2	SE 3	10	10●	10●		◍⁰ a, p.
5	22.5	19.3	15.2	1.2	3.6	4.4	4.7	5.1	4.9	5.0	87	79	78	SSE 2	SSE 4	SSE 5	10	10	10	4.8	◍⁰ n, ◍ tr. p.
6	05.8	09.9	10.5	3.6	5.0	4.2	2.4	6.0	5.4	4.9	92	87	89	NW 1	NNE 2	NNE 1	7	8	0	24.6	◍² n, ◍⁰ sch. a.
7	09.7	08.8	06.3	0.0	3.6	4.9	6.0	3.8	4.8	4.2	64	73	60	SE 2	SE 3	S 4	10	8	0	0.5	◍ tr. p.
8	97.6	96.7	94.1	3.5	9.1	8.9	**9.6**	5.1	6.0	6.0	60	71	67	S 6	S 6	S 6	10●	10●	10●	0.0	◍⁰ sch. n, ◍⁰ sch., ⸝ böen S a, ◍⁰ p.
9	89.3	90.7	89.2	6.6	6.6	3.6	4.2	5.8	5.2	4.2	80	88	68	SSE 4	SSE 4	SSE 4	10●	10●	0	10.4	◍ n, ◍, ◍⁰ a, p.
10	85.0	84.6	86.0	2.6	5.3	6.1	4.1	3.4	3.2	3.9	51	46	63		0	SE 2		3	9	2	12.8
11	89.7	91.0	92.5	0.2	0.2	0.9	0.4	3.7	4.3	3.7	80	87	78	N 1		0 NW 2	1	10✱	0		⌣ n, ✱⁰ a, p.
12	95.7	97.9	98.5	-0.3	1.9	1.1	-0.6	4.1	3.0	3.5	78	61	80	NNE 3	NNE 3	NNE 2	2	1	1	0.3	
13	96.8	96.5	95.3	-4.2	-3.6	-2.0	-3.2	3.0	3.2	3.4	86	82	93	N 1	SE 1	S 1	3	8	1	0.0	✱⁰ sch. n, a, ✱ sch. p.
14	05.5	09.8	11.7	-4.8	-4.2	-4.2	-6.6	2.3	2.3	2.1	69	69	74	W 1	S 1	SSE 1	0	0	0	2.4	
15	11.5	12.8	14.1	**-7.5**	-5.1	-4.2	-3.7	2.5	2.6	1.9	79	76	55	SSE 1	SSE 1	SSE 2	6	2	9		
16	08.4	07.9	06.1	-6.1	-0.7	1.2	1.9	4.2	4.8	4.8	97	96	91	SSE 3	SE 3	SE 2	10✱	10	10●	0.3	✱⁰ n, ◍ ✱⁰ a, ◍ ✱⁰, ◍⁰ p.
17	95.8	00.9	01.7	-0.7	1.6	-1.0	-2.9	3.7	4.1	3.4	71	97	91	NNE 5	NNE 4	NNE 4	8	9✱	10✱	10.8	◍, ◍ ✱ n, ✱⁰ sch. a, p.
18	99.6	96.6	92.9	-4.0	-3.0	-1.7	-2.8	3.5	3.2	3.6	95	79	96	NNW 3	N 1	SE 3	10✱	9✱	10✱	8.3	✱ sch. n, a, ✱⁰ sch. p.
19	95.8	97.2	97.5	-3.5	-3.3	-4.1	-5.8	**1.7**	2.3	2.6	46	67	88	NE 2	NE 0	SSE 1	0	9✱	0	2.5	✱ sch. n, ✱⁰ sch. a, p.
20	94.3	92.8	89.9	-6.0	-3.6	-3.3	-5.6	2.7	2.5	2.7	77	69	90	SE 2	ESE 2	SSE 1	4	5	4	0.0	
21	79.0	77.9	76.7	-5.8	-1.8	-3.7	-3.2	1.8	2.2	2.4	45	64	65	ENE 7	ENE 3	W 0	10	10✱	1		⸝ böen ENE n, ✱⁰ a, ✱⁰ sch. p, ▯ III.
22	78.6	81.2	82.0	-4.7	-4.7	-4.1	-5.5	2.1	2.3	2.0	66	67	66	SE 0	SSE 1	SE 1	1	7	1	0.0	
23	79.5	79.8	80.8	-5.5	-4.2	-1.8	-1.4	2.6	2.0	2.7	78	49	65	SE 1	SSE 2	SE 3	7	8	5		✱ sch. p.
24	80.6	79.7	79.8	-4.7	0.1	0.1	-0.3	4.3	4.6	4.2	93	00	94	SSE 4	SSE 2	SE 1	10	9	9✱	6.0	✱ sch. n, ✱ a, ✱ sch. p.
25	80.9	80.3	81.3	-1.2	3.1	1.5	1.5	3.8	4.9	4.9	66	96	94	W 5	WNW 3	NW 1	10	10●✱	10	12.2	✱ sch. n, ✱, ◍ ✱⁰ a, ◍ ✱, ◍⁰ p.
26	86.3	89.9	91.4	0.5	0.8	1.2	1.2	4.4	4.2	4.4	90	83	87	SSW 4	SSW 2	SSE 3	10△	10	9	16.9	◍ ✱, △⁰ n, ◍ ✱⁰ sch. a, ✱⁰ sch. p.
27	85.1	80.2	77.6	0.3	2.6	3.0	3.6	3.6	4.6	4.7	65	81	80	SSE 3	W 1	SSE 3	10	10●	10●	1.8	◍⁰ a, p.
28	79.5	81.9	83.1	2.2	3.7	4.2	4.0	5.3	5.4	5.3	88	87	87	SSE 3	SSE 4	SSE 3	10●	10●	10	7.1	◍⁰ n, a, p.
29	75.3	70.7	62.6	3.0	3.5	4.7	4.8	5.2	5.5	5.8	88	86	90	SSE 4	SSE 4	SSE 6	10●	10	10●	5.5	◍⁰ n, ◍⁰, ◍ a, ◍ p.
30	**62.5**	64.6	65.4	3.2	6.6	4.7	4.0	**6.2**	5.9	5.7	86	92	93	WSW 3	WSW 3	SSE 3	10	10●	9●	17.4	◍, ⸝ böen WSW n, ◍⁰ a, p.
31	67.2	73.2	79.1	3.7	3.7	3.5	2.0	5.3	5.2	5.1	88	88	96	W 1	SE 3	N 4	10●	10●	10●✱	2.5	◍⁰ n, ◍⁰ sch. a, ◍⁰ p.
M.	93.9	94.6	94.4	-1.6	0.4	0.8	0.3	3.8	3.9	3.9	78	78	81	2.5	2.3	2.4	6.6	8.1	5.8	147.1	

$H = 2$ m, $H_b = 6.3$ m — $\varphi = 62^0\ 28'$ N

$C_g = 1.55$ mb bei 1020 mb — $\lambda = 6^0\ 10'$ E

Januar.

Datum.	Luftdruck 900 oder 1000 + 8	2	7	Luft-Temperatur. Min.	8	2	7	Absolute Feuchtigkeit. 8	2	7	Relative Feuchtigk. 8	2	7	Richtung und Stärke des Windes. 8	2	7	Bewölkung. 8	2	7	Niederschl.	Bemerkungen.
1	78.7	79.3	80.0	2.9	4.8	5.6	3.4	5.1	5.2	5.0	80	78	85	S 4	S 6	S 5	10	10	10•	0.7	●u. ☇ n, ≡ ●⁰ u. ● ✶⁰ a, ●⁰ p.
2	56.6	**56.5**	61.6	2.0	5.1	4.4	4.8	5.3	5.3	5.4	81	85	85	SW 4	SSW 5	W 3	10	10	10	6.6	●⁰ n, a, p, ⸝ WSW 3-6 p.
3	65.8	71.0	74.4	1.5	4.6	4.2	5.4	5.2	5.2	5.4	83	85	80	W 6	SW 4	SW 7	10•*	10•	10•*	4.8	●⁰ u. ● ✶⁰ n, a, p.
4	81.4	84.9	88.6	1.5	4.3	3.4	3.2	5.2	5.1	4.3	83	87	74	W 5	W 5	W 4	9	10	10	5.5	●⁰, △⁰ u. < n, ●⁰ a, p.
5	90.2	92.5	90.9	1.9	4.4	3.6	1.4	4.3	5.0	4.6	69	85	91	SSW 6	SW 4	NW 5	10	10•*	10•*	0.2	●⁰ u. ● ✶⁰ n, a, p.
6	03.2	09.7	07.2	1.4	3.4	1.6	1.2	4.1	4.1	4.4	81	80	87	NNW 8	NW 6	W 6	10•*	10*	10*	18.4	●u. △⁰ n, ✶⁰ a, p.
7	94.7	91.8	01.1	0.2	7.2	8.2	5.8	6.9	7.2	6.2	91	89	89	W 7	W 7	W 7	10•	10•	10	4.7	●⁰ n, a, p.
8	03.3	00.4	99.4	4.4	6.4	8.4	6.2	5.9	6.8	6.5	83	83	91	SW 3	SW 8	W 6	10•	10	10•	4.7	●⁰ u. ● ✶⁰ n, ● a, p.
9	98.7	04.2	10.4	0.9	1.8	4.4	2.0	4.8	4.5	4.8	91	72	91	0	NNW 4	WNW 4	10	8	10	28.1	●² n, ●⁰ a bis 9 a, ✶⁰, △⁰ u. ●⁰ p.
10	12.6	05.8	02.5	1.4	4.4	6.8	9.6	4.6	5.9	7.1	74	80	81	S 2	S 6	SW 9	10	10	10	1.6	● ✶⁰ n, ●⁰ a, ● p.
11	10.8	14.3	16.5	4.2	8.8	9.2	8.8	**7.5**	6.9	6.7	89	80	80	SW 8	SW 7	SSW 4	10•	10	10	8.7	● n, ●⁰ tr. a, ●⁰ p. ⸝ W n.
12	16.6	17.4	15.8	7.4	8.6	8.4	7.8	7.0	6.3	5.8	85	77	74	S 5	SSW 5	SW 4	10•	10	10	3.9	●⁰ n, a.
13	12.2	08.9	08.8	7.3	8.0	7.4	8.2	5.6	5.3	5.8	70	69	72	S 4	SW 5	SW 6	10	10	10	0.1	
14	88.8	87.2	85.8	6.6	**13.6**	8.0	8.4	6.4	6.4	5.7	55	81	68	S 10	S 7	SW 9	10	10	10•		⊔ n, ● a, p. ⸝ WSW mg.
15	92.7	94.2	05.0	3.2	6.2	5.2	5.0	5.5	5.6	4.8	77	85	74	SW 9	W 7	W 8	10	9	10•	7.3	●⁰ u. ● ✶⁰ n, ♊ 4 a, ● ✶⁰ u. △⁰ a, p.
16	05.8	08.8	10.0	1.2	8.2	9.2	8.8	7.0	**7.5**	**7.5**	87	87	89	WSW 10	WSW 11	WSW 11	10•	10	10	10.4	●⁰ n, a, p.
17	17.9	18.2	17.2	6.5	7.8	7.0	7.2	7.1	6.1	5.6	91	81	74	WSW 6	WSW 5	WSW 3	10	7	4	4.3	●⁰ n, a, ●⁰ tr. p.
18	15.2	14.9	12.0	6.5	10.3	10.2	8.2	**7.5**	7.2	6.8	80	77	83	SW 7	SW 7	WSW 8	10	10	10•	3.7	●⁰ von 6 a an, ●⁰ tr. a, ● p.
19	33.6	40.7	43.2	3.7	4.7	4.4	4.4	4.8	4.5	4.5	74	72	73	NW 6	WSW 5	WSW 3	10	7	10	6.9	●⁰ u. ☇ n.
20	38.3	36.9	35.4	3.3	4.7	6.0	6.2	4.4	4.4	4.2	68	63	59	S 4	SE 2	SW 3	0	2	3		
21	33.5	32.2	31.0	3.4	5.6	6.0	2.6	4.1	5.1	4.3	61	73	78	S 3	S 2	S 1	2	2	1		
22	29.6	27.6	24.4	0.4	0.8	2.6	0.0	4.4	4.9	4.2	89	89	91	0	0	0	5	5	5		
23	21.9	21.9	22.1	-1.1	1.2	2.6	2.4	4.3	5.1	5.0	85	93	91	0	0	SE 1	2	10	10		≡⁰ a.
24	26.4	30.6	32.9	0.5	3.1	4.2	3.5	4.8	5.0	5.4	85	81	91	SE 2	0	S 1	10	10	10		♊ n, ●⁰ p.
25	39.8	43.4	45.9	2.1	2.4	2.8	1.6	5.0	4.7	4.4	91	85	85	SE 3	SE 2	SE 2	2	3	3	0.0	
26	**46.7**	44.0	42.5	0.2	1.4	2.3	0.6	4.2	4.4	4.0	81	80	83	SE 3	SE 4	SE 3	5	2	2		
27	35.8	31.4	28.3	-1.1	-0.6	0.7	-1.2	3.6	4.1	3.7	83	85	87	SE 1	SE 2	SE 2	1	1	1		
28	20.1	19.1	15.1	**-2.5**	-2.0	0.6	-0.2	3.5	4.0	3.9	87	81	85	SE 2	SE 1	SE 2	1	8	10		
29	06.9	94.8	79.9	-2.1	-0.4	1.8	2.6	**3.4**	3.6	3.8	75	70	68	SE 4	ESE 5	SE 5	6	3	10		
30	73.3	74.6	82.7	-0.4	3.6	5.6	5.5	5.3	6.1	5.7	89	89	85	SSW 6	SW 9	WNW 8	10•	10•	10	1.4	●⁰ u. ● ✶⁰ n, < SW 4 p, ● a, p.
31	71.5	80.0	86.4	0.8	3.6	4.0	3.2	5.3	5.5	5.4	91	91	93	SE 3	SW 6	NW 5	10•	10•	10•*	12.4	●⁰ n, ●⁰ u. ● ✶⁰ a, ●⁰ u. △⁰ p.
M.	07.2	07.7	08.3	2.2	4.7	5.1	4.4	5.2	5.4	5.2	81	81	82	4.5	4.7	4.7	7.8	8.0	8.4	134.4	

Februar.

Datum.	Luftdruck 900 oder 1000 + 8	2	7	Luft-Temperatur. Min.	8	2	7	Absolute Feuchtigkeit. 8	2	7	Relative Feuchtigk. 8	2	7	Richtung und Stärke des Windes. 8	2	7	Bewölkung. 8	2	7	Niederschl.	Bemerkungen.
1	92.8	97.6	09.4	0.5	1.5	1.4	3.4	4.5	4.6	3.9	87	91	66	W 5	NW 7	NW 5	10•*	10*	10	20.6	● ✶ n, a, p.
2	11.2	00.5	01.4	-0.8	2.0	5.0	6.4	4.0	5.2	5.8	75	80	81	SE 4	SE 7	SW 8	3	10•	10•	7.6	✶⁰ n, ●⁰ von 2 p an, < abd.
3	02.7	00.6	93.5	1.6	4.8	6.6	3.0	5.3	5.8	5.1	83	80	89	SW 6	S 5	SSW 8	10	5	10•	5.2	●⁰ n, abd. ☇², ● ✶⁰ u △⁰ sch. spätabd.
4	97.7	02.4	05.7	0.7	1.8	2.4	4.0	4.6	4.4	4.5	87	80	74	SSW 7	W 7	W 7	10•*	8	10	13.7	● ✶⁰ u. △⁰ n, a, ☇ a.
5	83.3	85.1	81.2	0.9	**8.4**	3.0	2.8	**6.6**	4.8	4.6	81	85	81	SW 9	WSW 8	WSW 8	10	10	10	15.0	●⁰ n, ●⁰ u. ● ✶⁰ a, p, < abd.
6	78.7	86.0	89.7	-0.1	4.2	4.6	3.2	5.1	5.0	4.7	83	80	81	SW 10	WNW 7	NW 3	10	10•*	10	8.5	● ✶⁰ u. ⸝ SW n, ● ✶⁰ u. △⁰ a, p.
7	98.1	03.0	02.0	-0.4	0.8	1.4	1.6	4.2	4.7	4.7	87	93	91	W 2	N 3	E 2	10	10*	2	5.4	✶ n, a.
8	84.9	76.5	71.0	-1.6	2.2	4.6	1.4	3.5	4.4	3.8	64	70	75	SE 7	S 9	SSW 8	10	10	10	5.1	
9	67.4	66.6	73.5	1.2	2.5	4.2	2.8	4.8	5.0	4.6	87	80	81	SW 7	SW 5	W 8	10•*	10•*	10	7.2	● u. ● ✶⁰ n, ●⁰ u. ● ✶⁰ a, p.
10	83.4	78.6	68.7	-0.6	1.4	3.5	4.6	4.4	5.1	5.2	85	87	83	W 3	SSW 4	SE 3	10	10•	10	5.3	✶⁰ n, ●⁰ u. ● ✶⁰ a, ●⁰ p.
11	75.9	81.4	82.8	0.9	4.4	3.3	2.5	5.1	5.2	4.3	83	89	74	SW 6	SW 6	SE 1	10•	10	10	15.8	● n, ● ✶⁰ u. ●⁰ a.
12	78.1	**65.5**	77.9	2.3	3.8	5.4	4.2	4.6	6.1	4.9	77	91	78	SE 3	SE 3	NW 1	10	10*	10•	5.1	● ✶⁰ n, ● ✶ a, p.
13	86.8	91.0	93.1	0.1	0.8	2.0	3.5	4.4	3.9	4.3	91	74	75	S 1	N 1	E 1	10*	9	10	16.5	✶ n, ● ✶ a.
14	94.9	96.6	96.8	0.5	4.0	8.2	7.6	5.5	5.6	5.1	91	69	65	SE 1	SE 1	SE 1	10	10	10	1.0	●⁰ n.
15	96.9	98.3	01.7	3.4	5.4	4.4	5.0	6.1	5.4	5.7	91	87	87	SSW 1	SW 4	SSW 4	10•	10•	10•	1.4	●⁰ n, a, p
16	04.9	01.0	99.6	3.7	4.5	5.4	5.2	5.1	5.6	5.3	81	83	80	ESE 2	ENE 4	ENE 3	10	9	10	7.0	●⁰ n.
17	00.8	00.6	99.9	2.7	2.7	6.0	4.0	5.1	5.6	5.3	91	81	87	0	0	0	10	10	10		
18	03.0	04.5	06.3	1.3	1.8	4.1	2.6	3.8	4.5	4.5	74	73	80	E 1	ESE 2	ENE 5	1	4	10		
19	09.6	11.6	13.0	-0.8	-0.3	1.7	0.4	3.4	3.8	3.5	74	73	75	E 4	E 1	E 3	1	2	5		
20	**13.4**	12.7	11.1	**-1.8**	**-1.8**	1.4	0.4	3.3	3.8	3.4	80	74	72	E 4	E 3	E 2	3	2	10		
21	11.5	09.2	10.8	**-1.8**	1.8	3.2	2.8	4.5	4.9	4.6	85	85	81	SW 2	E 2	SSE 3	10	7	10	0.8	✶ n.
22	11.6	11.4	11.2	1.6	2.8	3.6	2.0	3.8	3.9	3.4	68	65	64	SE 3	SE 3	SE 3	10	6	10		
23	12.6	12.6	12.4	-0.4	-0.4	2.0	0.1	3.1	3.1	2.8	67	59	59	E 3	E 3	E 3	3	1	2		
24	10.0	07.3	05.5	-0.7	-0.7	1.2	0.4	**2.6**	2.8	2.7	60	57	59	E 3	SE 2	E 3	2	0	2		
25	02.3	01.3	00.4	**-1.8**	1.4	3.6	2.8	3.0	3.4	3.2	59	57	57	E 4	E 4	E 3	10	2	5		♊ n.
26	97.2	95.4	95.8	1.4	4.0	6.5	5.6	3.5	4.2	3.8	58	58	57	E 2	SE 4	ESE 4	8	10	10		
27	95.7	95.9	95.7	3.4	4.2	5.8	3.6	3.5	3.7	3.4	57	54	57	ESE 4	ESE 5	ESE 5	9	9	5		
28	98.2	99.2	01.5	1.4	2.0	4.7	2.0	3.2	4.0	3.7	60	63	69	ESE 4	ESE 2	ESE 2	3	3	6		
M.	96.6	96.2	96.8	0.6	2.5	3.9	3.0	4.3	4.6	4.3	77	76	74	3.9	4.0	3.8	8.0	7.4	8.5	141.2	

$H = 2$ m, $H_b = 6.3$ m
$C_g = 1.55$ mb bei 1020 mb

$\varphi = 62^0\ 28'$ N
$\lambda = 6^0\ 10'$ E

März.

Datum.	Luftdruck. 900 oder 1000 + 8	2	7	Luft-Temperatur. Min.	8	2	7	Absolute Feuchtigkeit. 8	2	7	Relative Feuchtigk. 8	2	7	Richtung und Stärke des Windes. 8	2	7	Bewölkung. 8	2	7	Niederschl.	Bemerkungen.
1	08.0	13.0	15.8	0.4	2.6	2.6	1.0	4.7	5.2	4.1	85	91	80	NE 5	NE 5	NE 2	10	10	10		♊ n.
2	20.9	23.9	25.6	-1.6	-1.0	2.6	1.4	3.4	3.9	3.6	81	70	70	E 1	E 1	E 1	4	9	7		
3	27.6	26.0	23.3	-1.5	2.2	3.8	4.0	4.3	4.4	5.0	81	74	83	S 2	S 4	SW 5	10	10	10		✱⁰ fl. p.
4	20.9	21.8	19.2	2.0	3.8	1.0	1.6	5.1	4.6	4.7	85	93	91	WNW 7	NW 5	NW 6	10	10•	10	2.5	◎⁰ n, ◎ ✱⁰ sch. a, p.
5	03.4	90.0	87.3	0.5	3.6	6.8	4.8	5.3	**6.8**	5.2	89	91	81	SSW 4	SW 8	WNW 8	10	10•	10•	2.2	◎⁰ n, ◐ a, ◎⁰ p.
6	89.5	88.2	88.1	1.8	4.0	3.0	3.4	5.5	5.4	5.1	91	95	87	NNE 5	WNW 5	WNW 6	10•	10•	10•	11.1	◎ u. ◎ ✱⁰ n, ◎⁰ a, p.
7	**85.1**	89.3	89.7	-1.5	0.9	-2.0	-2.2	4.2	3.2	2.5	85	80	64	SW 4	NE 4	NE 3	10•	10•	10	14.2	◎ ✱ n, a, ♍ abd.
8	92.1	93.1	92.3	-5.1	-4.6	-1.8	-1.5	2.3	3.7	3.1	70	91	75	E 4	SW 3	SW 3	3	10•	10	5.0	✱ a, p, ♍ abd.
9	98.8	02.4	10.1	-4.6	-2.7	-0.2	-0.7	2.7	4.0	3.3	72	87	75	SE 4	SE 3	ENE 4	8	10	5	3.5	✱⁰ fl. n, ✱ a, p.
10	18.5	20.6	21.5	-4.4	-2.8	1.4	0.0	3.1	3.8	3.9	83	74	85	E 2	E 1	W 3	4	7	10•	6.1	✱ von 6³⁰ p, an.
11	27.9	31.9	**33.6**	-3.4	-2.4	-2.2	-4.6	3.0	2.3	2.1	77	60	63	ESE 4	E 4	E 2	5	0	1	2.0	
12	30.5	28.3	24.0	-5.0	-3.0	-0.2	-1.4	3.2	3.6	3.7	85	80	89	ESE 3	SSE 2	S 1	6	3	10		
13	20.4	16.6	13.7	-5.5	-5.2	-3.0	-4.3	2.2	2.3	2.2	70	63	65	SE 3	SE 5	ENE 4	2	2	2	0.5	✱ n.
14	12.4	12.3	15.0	**-6.9**	-6.4	-3.0	-4.0	**2.0**	2.4	2.2	68	64	65	SE 3	ESE 3	ESE 3	1	2	3		
15	18.8	22.7	24.8	-6.4	-0.6	2.5	0.7	3.9	4.3	3.8	80	77	77	E 1	W 3	ESE 1	10	8	0	2.0	✱ n, a.
16	20.5	16.8	18.7	-1.7	4.0	6.5	0.8	5.2	5.4	4.5	85	75	93	SSE 3	SW 4	SSW 4	10	10	10•	1.5	◎⁰ tr. n, ◎⁰ a, ◎ ✱⁰ u. ◎⁰ p.
17	25.4	25.4	23.7	0.3	1.9	5.2	3.3	3.9	4.4	4.4	74	67	77	E 1	SE 2	SSW 3	7	10	10	5.9	◎⁰ n, bis 4 a.
18	22.6	20.3	18.6	1.5	6.0	**7.6**	0.8	5.5	6.3	6.1	80	81	83	SW 6	SSW 6	SSW 5	10	10	10•	0.6	◎⁰ n, a, ◎⁰ tr. p.
19	17.0	15.9	13.6	3.5	5.0	5.0	3.5	5.3	5.3	5.1	81	81	87	WSW 4	WSW 6	WSW 5	7	7	10	8.7	◎ n, ◎⁰ u. ◎ ✱⁰ p.
20	09.5	10.3	09.4	0.3	2.8	1.3	1.0	4.7	4.6	4.5	85	91	91	NNW 7	NNW 5	NNW 5	10•	10	10	9.2	◎ ✱ n, ✱ u. △⁰ a.
21	11.1	14.4	14.4	-0.2	-0.2	0.8	0.3	4.3	4.4	4.3	95	89	93	E 2	NNE 4	NE 2	9	10•	10	6.9	✱ n, ✱ sch. a, p.
22	17.0	17.0	15.7	-1.0	0.0	2.7	0.3	4.4	4.4	4.4	95	80	95	NW 3	SW 3	NW 1	10•	8	10	8.4	✱ n, a, p, spätabd.
23	06.3	01.0	99.0	-0.9	1.8	3.8	3.6	3.6	4.1	4.0	68	68	68	SE 4	SE 3	SE 5	8	10	5	4.9	
24	97.3	99.1	02.9	1.8	4.2	6.5	5.3	4.2	4.2	4.2	67	59	63	SE 2	SE 3	SE 3	9	9	8		
25	10.7	14.1	16.5	1.5	2.7	5.2	2.1	3.9	4.8	4.3	70	73	81	SE 2	SE 2	NE 2	3	4	2		
26	19.2	19.1	19.3	0.0	0.4	3.1	1.8	3.8	4.3	4.6	80	74	87	SE 3	SE 1	SE 3	1	2	3		
27	13.7	14.8	16.1	-0.5	4.0	2.0	1.1	4.4	4.8	4.2	72	91	80	SSW 3	WNW 6	NW 4	10	10•	10•		◎⁰ tr. a, ◎ ✱⁰ p.
28	15.7	13.4	11.8	-1.7	0.0	-0.8	-1.0	3.4	3.3	3.5	74	77	83	NW 5	SW 7	SW 3	9	10	10	3.5	✱⁰ n, a, p.
29	08.1	08.7	03.7	-2.7	-0.1	2.6	2.0	3.9	4.1	4.0	85	74	75	SW 4	SW 4	SW 2	10	10	10	5.4	✱⁰ n, ✱⁰ fl. a, p
30	94.6	93.0	87.5	-0.3	5.0	6.0	6.8	5.7	6.0	5.9	87	87	80	SW 5	SW 5	SSW 7	10•	10•	10	6.6	◎ n, a.
31	95.2	00.1	03.0	1.3	2.7	4.2	2.7	5.0	4.6	4.5	89	74	81	W 5	WSW 6	WSW 5	10•	10	10	47.5	◎ u. ◎ ✱⁰ n, ◎ ✱⁰ u. △⁰ a.
M.	11.6	11.7	11.5	-1.3	0.9	2.4	1.3	4.1	4.4	4.1	81	78	80	3.6	4.0	3.6	7.6	8.1	7.9	158.2	

April.

Datum.	Luftdruck. 900 oder 1000 + 8	2	7	Luft-Temperatur. Min.	8	2	7	Absolute Feuchtigkeit. 8	2	7	Relative Feuchtigk. 8	2	7	Richtung und Stärke des Windes. 8	2	7	Bewölkung. 8	2	7	Niederschl.	Bemerkungen.
1	02.8	01.9	01.6	-0.2	0.8	1.8	1.2	4.0	4.6	3.8	83	87	75	SE 2	SW 3	SW 3	3	10	3	3.4	✱ n, ✱⁰ fl. a.
2	87.9	88.8	93.2	-0.2	5.1	5.2	1.4	4.5	5.1	4.3	70	77	85	S 8	SW 8	SW 7	10	10	10	0.0	◎ a, ✱ u. ⚡ SW p.
3	95.0	01.1	05.2	-0.9	-0.2	2.2	0.6	**3.6**	4.4	4.0	80	83	83	SSW 8	W 8	W 7	10•	10	10	7.9	✱ n, ✱ u. △⁰ a, ◎ ✱⁰ sch. p.
4	11.0	11.3	10.2	**-2.2**	2.4	5.4	5.0	4.2	4.5	4.8	77	68	74	SW 4	SE 2	SSW 6	10	4	10	7.2	✱⁰ n.
5	12.5	15.1	14.6	2.0	5.0	9.0	6.0	4.4	5.1	4.7	68	60	67	SW 3	SE 2	0	4	5	10		
6	14.7	13.0	13.3	2.9	5.4	11.8	11.2	5.1	**7.0**	6.0	77	68	60	SSW 1	S 2	SE 3	10•	7	8	0.0	◎⁰ 8-9 a.
7	16.0	16.6	17.7	5.1	9.8	**13.2**	9.6	4.8	6.3	5.1	53	55	56	SE 3	SE 1	SE 3	4	3	2	0.3	
8	17.0	18.4	17.9	4.7	7.7	8.6	6.8	4.5	6.2	5.7	58	74	77	SE 4	SE 3	SE 2	4	3	2		
9	17.3	16.9	17.3	2.6	7.2	12.0	11.0	4.6	5.2	4.8	61	49	50	SE 3	SE 3	SE 1	2	1	3		
10	21.2	22.6	23.4	5.5	8.1	10.4	11.4	5.2	5.0	5.4	65	53	54	SE 3	SE 2	SE 2	4	1	1		
11	**25.8**	25.6	24.8	5.9	8.0	12.9	10.6	5.3	6.3	5.2	66	57	55	SE 3	SE 3	SE 2	1	2	2		
12	21.5	20.5	18.2	6.0	8.2	10.6	9.8	5.3	6.4	6.4	65	68	70	SE 3	0	SE 3	2	1	3		
13	12.4	08.7	05.6	5.2	7.2	13.1	9.0	5.0	6.3	5.1	66	56	59	SE 3	SE 3	SE 1	3	7	5		
14	01.9	02.3	03.4	5.4	7.6	8.4	7.7	5.0	6.6	6.3	64	81	81	SE 3	SE 1	NW 3	4	10	5		
15	97.5	90.6	86.9	5.2	6.0	11.8	9.0	6.4	6.2	4.7	91	60	55	SE 1	SE 4	ESE 4	10	1	3		
16	**83.8**	87.9	89.8	5.4	7.2	9.2	7.6	5.2	5.9	5.8	68	68	75	SE 1	SE 1	SW 3	10	10	8		◎⁰ von 11 p an.
17	97.2	98.8	99.7	4.2	4.2	6.4	4.4	5.5	5.8	5.5	89	81	89	NNW 5	SW 3	SW 4	10	10	9	2.1	◎⁰ n, p.
18	01.9	04.1	05.5	2.1	4.6	7.0	3.5	5.3	5.6	5.5	85	75	93	WSW 3	SW 4	SW 4	8	9	10	2.3	◎⁰ n u. von 5 p an.
19	10.8	14.1	16.4	2.1	5.3	5.4	4.5	6.0	6.0	5.3	91	89	85	NW 5	NNW 4	W 4	10	10	10	5.5	◐ n, ◎⁰ a, ◎⁰ tr. p.
20	14.9	13.6	15.8	3.6	6.2	7.2	5.6	5.9	6.3	5.8	85	83	85	SW 4	SW 3	WSW 3	10	10	7	1.6	◎⁰ n, p.
21	20.6	19.2	16.0	2.2	4.2	6.2	5.0	4.9	5.2	5.3	78	74	81	SW 4	SW 1	0	10	6	8	5.8	◎⁰ sch. n.
22	03.6	04.5	02.5	3.7	10.3	8.6	8.2	5.0	5.9	5.5	53	70	67	S 4	S 4	SW 1	10	9	2		◎⁰ tr. a, p.
23	86.9	90.2	94.0	6.2	10.2	9.0	5.2	6.3	5.5	5.2	68	65	78	SSW 5	SW 6	SW 6	10	6	7	0.0	◎⁰ tr. a, ◎⁰ sch. p.
24	95.2	96.0	96.6	4.4	7.4	9.6	8.8	4.6	5.1	5.1	60	56	61	SE 4	SE 3	S 2	3	9	7	0.1	
25	95.4	96.6	99.0	4.2	5.2	9.6	8.4	4.9	5.8	5.2	74	65	63	SE 4	E 4	E 1	10	9	8	0.0	◎⁰ tr. n, a.
26	04.7	07.6	09.4	3.0	6.1	7.5	7.4	5.5	6.4	6.2	77	83	81	SE 1	NE 4	NE 3	2	2	1	0.0	
27	12.9	13.4	13.2	4.4	6.4	6.5	5.8	5.5	5.3	5.1	77	74	75	0	NE 3	NE 4	6	2	1		
28	10.6	11.2	11.5	1.8	4.8	6.6	6.6	5.1	5.4	5.3	80	74	73	E 1	ENE 4	NE 3	1	7	7		
29	15.6	16.4	16.6	2.8	5.2	6.6	5.8	4.9	5.7	5.5	74	78	81	E 3	NE 4	NE 5	1	2	2		
30	13.2	10.6	09.0	2.8	5.3	6.4	7.0	5.3	5.5	6.0	80	77	80	SE 1	NE 4	NE 3	2	1	3		
M.	07.4	07.9	08.3	3.3	6.0	8.3	6.8	5.1	5.7	5.3	73	70	72	3.2	3.2	3.1	6.1	5.9	5.6	36.2	

$H = 2$ m, $H_b = 6.3$ m
$C_g = 1.55$ mb bei 1020 mb

$\varphi = 62^0\ 28'$ N
$\lambda = 6^0\ 10'$ E

Mai.

Datum.	Luftdruck. 900 oder 1000 + 8	2	7	Luft-Temperatur. Min.	8	2	7	Absolute Feuchtigkeit. 8	2	7	Relative Feuchtigk. 8	2	7	Richtung und Stärke des Windes. 8	2	7	Bewölkung. 8	2	7	Niederschl.	Bemerkungen.
1	07.8	09.2	11.1	3.2	5.1	5.4	5.2	5.2	5.0	4.9	80	75	74	E 1	NE 4	NE 5	2	5	4		
2	13.8	13.8	13.1	**1.4**	4.4	6.2	6.2	**4.8**	5.4	5.7	77	77	81	ENE 2	NE 4	NE 3	3	2	8		
3	08.6	08.3	12.2	3.2	6.2	7.4	5.8	5.9	5.9	6.1	85	77	89	0	E 1	E 2	7	10	10•		⊗⁰ tr. p.
4	17.7	17.3	17.5	4.2	6.8	7.2	8.0	6.4	6.1	6.4	87	81	81	E 2	NE 4	NE 2	3	3	4	0.0	⊗⁰ tr. n.
5	17.4	17.8	18.3	6.2	8.4	9.2	7.9	5.9	7.1	7.2	72	81	91	E 1	NE 2	NE 1	7	10	10		
6	17.6	16.0	14.7	5.6	8.4	8.0	8.8	6.6	6.7	7.5	81	83	89	NE 1	NE 2	NE 3	1	1	0		
7	11.3	09.4	07.3	6.4	11.6	16.4	16.8	6.9	7.2	7.4	68	52	52	E 1	SE 4	SE 2	1	0	0		
8	09.5	09.0	08.6	9.2	9.8	10.8	10.2	7.9	8.0	8.1	87	83	87	NW 1	NE 4	NNE 3	10	3	5	0.0	⊗⁰ tr. 4 a.
9	10.6	10.6	09.5	8.0	9.8	9.8	9.0	7.9	8.1	7.7	87	89	91	0	NE 4	NE 2	2	2	9		⊗⁶ tr. p.
10•	10.9	12.3	12.9	7.8	8.7	11.0	10.0	7.9	7.8	6.8	95	80	74	S 1	S 1	S 1	10•	10	10	3.0	⊗⁰ von 6³⁰a an, ⊗⁰ tr. p.
11	11.7	08.3	05.8	7.6	9.8	16.8	10.2	7.9	8.3	6.9	87	59	75	S 1	SE 3	WSW 4	6	3	10	1.8	⊗⁰ sch. n.
12	04.1	08.7	11.1	8.7	11.8	11.0	11.2	7.5	7.8	6.9	73	80	69	SW 2	SW 4	SW 5	9	9	9	0.0	⊗⁰ sch. n, ⊗⁰ a, ⊗⁰ tr. p.
13	11.2	13.6	17.2	8.1	8.4	10.4	9.0	7.3	7.4	7.4	89	78	87	SE 1	SW 4	SW 5	10•	8	10•	2.6	⊗⁰ n, ⊗⁶ sch. a, ⊗ sch. p.
14	20.5	22.1	23.5	7.1	8.5	9.4	9.6	6.7	7.3	7.3	81	85	83	SSW 4	SW 5	WSW 5	10	4	5	5.5	⊗⁰ sch. n, a, ⊗⁰ tr. p.
15	23.5	21.2	18.2	6.9	9.2	9.8	10.0	6.7	6.1	8.2	78	68	89	SE 2	NNE 3	NE 2	2	3	2	1.8	
16	15.5	14.6	13.6	8.6	13.4	14.8	12.6	7.5	8.5	8.6	65	68	80	SE 3	SE 1	N 2	7	5	3		
17	13.0	13.6	17.2	12.2	17.2	**23.2**	13.8	8.5	**10.6**	9.0	58	50	77	SE 2	SE 3	NW 4	3	7	8		
18	21.2	21.4	21.2	10.0	14.7	18.2	15.8	9.1	9.3	9.3	73	60	70	E 3	E 2	NE 1	1	1	3		
19	23.3	**24.6**	23.1	13.2	15.8	16.0	15.4	8.4	8.5	8.8	63	63	67	SE 2	NNW 1	0	1	0	0		≡⁰ a.
20	20.2	18.2	17.2	10.1	10.8	9.4	8.3	8.4	8.0	6.6	89	91	81	N 3	N 4	NE 4	8	7	9		
21	15.0	13.7	12.0	6.1	7.6	8.0	7.4	5.3	6.2	5.9	68	78	77	NE 5	NE 6	NE 6	3	2	5		
22	07.7	07.1	06.5	5.5	7.2	7.0	6.8	5.6	5.6	6.0	74	75	81	NE 3	NE 4	NE 5	4	10	8		
23	08.2	08.4	09.1	4.7	7.7	8.2	8.0	5.4	6.0	6.3	70	74	80	NE 3	NE 6	NE 6	2	2	3		
24	09.6	09.3	10.1	5.3	7.9	9.1	8.6	6.2	7.1	6.7	78	83	81	NE 2	NE 5	NE 5	3	4	6		
25	08.7	08.7	09.5	5.3	9.6	9.4	8.8	6.8	7.3	7.1	77	85	85	NE 1	NE 5	NE 4	7	5	7		
26	09.5	08.1	07.1	8.4	9.8	10.2	9.8	7.9	8.3	8.2	87	90	91	NE 2	NE 2	NW 1	8	9	10•		⊗⁰ von 5 p an.
27	02.5	99.8	96.6	8.3	11.3	17.8	16.0	8.3	8.5	7.8	83	57	57	E 2	SE 4	SE 1	9	4	10	7.1	
28	**91.9**	92.0	92.7	10.9	16.8	14.4	19.0	9.4	9.8	9.7	66	81	59	SE 3	SE 1	SE 3	10	10	8	3.5	⊗⁰ n.
29	00.5	00.5	98.7	10.9	13.2	15.3	11.8	9.5	9.1	8.3	85	70	81	SE 1	SW 4	E 2	2	10	7	0.0	⊗⁰ tr. n, p.
30	96.4	93.8	95.3	10.0	14.6	16.0	13.4	8.1	8.3	7.8	65	61	69	SE 4	SE 3	SSW 4	9	10•	6	0.0	⊗⁰ tr. a, p.
31	96.7	99.2	02.2	10.2	12.4	13.3	10.0	7.1	8.3	7.7	66	73	85	SE 2	SW 2	W 6	3	10	10•	0.1	⊗⁰ n, a, ⊗ p.
M.	10.8	10.7	10.7	7.5	10.2	11.6	10.4	7.2	7.5	7.4	77	74	78	2.0	3.3	3.2	5.3	5.5	6.4	25.4	

Juni.

Datum.	Luftdruck. 900 oder 1000 + 8	2	7	Luft-Temperatur. Min.	8	2	7	Absolute Feuchtigkeit. 8	2	7	Relative Feuchtigk. 8	2	7	Richtung und Stärke des Windes. 8	2	7	Bewölkung. 8	2	7	Niederschl.	Bemerkungen.
1	08.3	10.6	11.5	8.5	9.2	14.4	10.4	7.2	8.7	7.4	83	72	78	SE 1	SE 1	SE 1	10•	5	10	9.1	⊗ n, ⊗⁰ a, p.
2	11.6	11.8	12.4	9.2	13.2	12.8	12.2	7.7	7.3	7.2	68	67	68	SE 1	SW 3	SSW 2	6	10	8	2.4	
3	13.5	15.5	17.0	8.9	11.4	10.4	9.7	8.1	7.7	7.8	81	83	87	SW 2	SW 4	WNW 2	8	9	6	0.0	⊗⁰ tr. n, ⊗⁰ sch. a.
4	21.9	21.8	22.2	8.1	11.4	11.9	11.2	8.1	7.7	7.7	81	74	78	0	NNE 3	NE 2	3	2	9	1.0	
5	21.5	20.4	20.0	10.4	14.4	15.2	**18.0**	9.7	10.4	11.0	80	81	72	0	SSW 1	0	9	10	10		
6	19.6	19.7	18.4	11.1	13.0	11.7	11.8	10.2	9.6	10.0	93	95	97	SE 1	NW 3	WNW 4	10	10•	10		⊗⁰ von 6³⁰ p an, spätabd.
7	26.0	27.2	27.0	9.2	9.8	11.6	11.2	8.2	8.2	8.8	91	81	89	NW 3	NE 3	NE 4	3	3	5	6.4	
8	28.8	**30.5**	30.2	9.6	13.0	14.8	15.6	10.1	9.4	9.1	91	75	68	0	NW 2	0	7	3	2		
9	29.4	28.6	27.7	11.0	15.0	16.6	**18.0**	9.8	9.9	10.7	77	70	70	0	NE 3	N 2	2	1	1		
10	26.2	26.6	25.9	12.7	17.2	15.8	14.2	**11.6**	**11.6**	10.4	80	87	87	0	NNW 4	NNW 3	1	1	8		
11	22.4	21.2	19.5	11.4	13.2	14.0	11.6	9.7	9.6	8.2	87	81	81	WSW 3	WSW 4	WSW 5	10	10	10		
12	15.9	13.8	12.4	8.6	9.0	10.3	10.4	7.2	8.0	7.7	85	87	83	SW 4	SW 5	SW 4	10•	10•	10	5.4	⊗ n, ⊗⁰ sch. a, p.
13	02.6	98.4	98.9	8.6	11.6	11.6	8.5	8.6	9.2	6.8	85	91	83	SW 4	SW 6	WNW 6	10•	10	10	7.5	⊗ n, a, ⊗⁰ p.
14	03.3	07.5	09.4	5.8	8.8	7.9	6.6	7.0	7.4	7.0	83	93	95	NNW 7	NNW 5	NNW 4	6	10	10•	15.7	⊗ n, ⊗⁰ a, p.
15	07.8	03.2	03.0	6.6	10.5	11.4	12.4	6.8	8.0	8.6	73	80	80	SW 3	SW 2	SW 6	10	10	10	3.1	⊗⁰ sch. n, ⊗⁰ tr. a.
16	99.2	95.3	**93.6**	9.2	11.8	11.6	8.6	8.7	7.6	7.9	85	75	95	SW 6	SW 5	N 5	10	10•	10•	0.0	⊗ a, p.
17	01.2	00.5	99.0	**4.7**	6.6	7.6	7.7	**6.5**	6.9	6.7	90	89	87	W 6	W 7	NW 5	10	10•	9	17.1	⊗ n, a, p.
18	01.1	07.3	11.3	5.4	9.4	9.4	9.0	8.8	8.8	8.6	00	00	00	N 8	NNE 7	NNE 5	10•	10	10	19.1	⊗ n, ⊗⁰ a, p.
19	12.3	12.0	10.8	7.4	8.6	9.6	9.5	7.5	7.1	7.3	91	80	83	NE 3	NE 3	N 3	10	9	10	2.7	⊗⁰ n.
20	05.6	04.3	02.9	8.0	9.0	9.8	9.2	8.0	8.3	8.2	93	93	95	0	N 2	N 2	10•	10•	10•	1.5	⊗⁰ n, a, ⊗ p.
21	03.5	06.2	07.8	8.3	12.6	16.4	15.6	8.3	10.3	9.8	77	74	75	0	NE 4	NE 7	7	5	4	8.4	⊗⁰ n.
22	14.9	16.9	17.3	8.4	10.2	10.4	10.6	8.4	8.4	8.6	91	91	91	NE 3	NE 4	NE 6	10	6	7		
23	19.9	20.1	19.8	9.1	9.6	10.4	12.1	8.4	8.4	9.0	95	91	87	ENE 6	ENE 5	NE 5	3	3	2		
24	19.6	18.2	17.1	9.1	10.6	10.6	9.8	7.8	8.1	7.6	83	85	85	ENE 2	NE 5	NE 7	9	2	6		
25	12.9	11.5	10.4	8.2	9.7	9.8	8.2	8.0	6.8	7.0	89	75	87	NNE 2	NNE 3	NW 3	9	8	10	0.3	⊗⁰ n.
26	08.4	09.3	11.0	7.4	10.4	10.2	10.2	6.8	7.0	8.2	73	77	89	NE 2	NE 4	NE 4	10	8	8		
27	14.2	15.0	14.2	9.1	11.1	11.6	12.0	8.4	8.3	8.8	85	83	85	NE 4	NE 5	NE 4	7	2	2	0.0	⊗⁰ tr. n.
28	15.9	17.8	19.1	9.2	10.2	11.2	10.2	8.2	8.2	7.8	89	81	85	NE 1	NW 3	NW 2	10	10	10		
29	19.8	20.0	19.0	9.0	12.2	12.6	14.2	8.4	9.1	9.6	81	85	81	0	NE 3	N 2	5	2	2		
30	20.4	21.3	21.5	11.3	14.8	14.4	15.4	10.1	10.8	9.7	81	89	75	SE 2	NE 3	NE 4	2	1	1		
M.	14.3	14.4	14.3	8.8	11.2	11.9	11.5	8.5	8.6	8.4	85	83	84	2.5	3.7	3.6	7.6	6.7	7.3	60.8	

$H = 2$ m, $H_b = 6.3$ m
$C_\varphi = 1.55$ mb bei 1020 mb

$\varphi = 62^0\ 28'$ N
$\lambda = 6^0\ 10'$ E

Juli.

Datum.	Luftdruck. 900 oder 1000 + 8	2	7	Luft-Temperatur. Min.	8	2	7	Absolute Feuchtigkeit. 8	2	7	Relative Feuchtigk. 8	2	7	Richtung und Stärke des Windes. 8	2	7	Bewölkung. 8	2	7	Niederschl.	Bemerkungen.
1	20.1	21.6	21.9	11.9	15.2	12.2	13.0	10.9	10.0	10.1	85	95	91	N 1	N 1	N 2	2	5	6		≡ von 9^{30} a - 1^{30} p.
2	21.0	19.1	16.4	10.7	14.8	18.8	17.2	11.1	12.9	11.6	89	80	80	N 1	N 3	N 3	4	2	1		≡ ^{0} n.
3	17.0	16.3	15.6	13.5	18.7	19.9	19.2	11.2	13.0	11.3	70	80	68	N 1	W 2	N 3	2	2	1		
4	13.2	11.6	12.0	14.4	17.4	18.1	18.4	12.0	12.4	12.2	81	80	78	0	NW 2	0	3	5	10		⊗ ^{0} sch. p.
5	12.2	13.7	14.3	14.4	17.9	13.2	13.0	12.4	10.6	10.5	81	95	95	0	WNW 4	0	4	10	10	0.0	≡ ^{0} a.
6	09.3	06.6	05.8	12.9	15.2	16.4	15.6	12.0	12.6	12.3	93	91	93	NE 2	NE 3	NE 1	10	7	9		⊗ ^{0} sch. von 10 p. an.
7	09.1	09.4	09.4	14.1	14.8	14.2	14.0	10.1	10.6	10.7	81	89	91	W 3	NW 3	NW 1	8	4	10	0.2	⊗ ^{0} sch. n.
8	07.7	10.4	11.0	12.0	12.9	13.6	13.2	10.7	9.6	8.5	97	83	75	W 3	W 5	W 4	10	10	6	4.5	⊗ von 4^{30} a an, ⊗ ^{0} sch. a.
9	10.4	10.3	10.2	11.3	14.4	15.0	12.4	9.4	10.1	8.8	77	80	83	NE 1	NW 3	NW 2	9	9	8	1.0	⊗ ^{0} sch. a, p.
10	08.4	08.0	09.2	**10.3**	12.8	13.2	12.6	8.6	**8.2**	8.3	78	73	77	NW 1	NW 3	NW 2	10	5	6	0.5	⊗ ^{0} sch. n.
11	11.6	16.8	18.3	12.6	12.6	12.4	12.4	9.6	9.2	8.9	89	87	85	0	W 5	W 5	10	10	9	0.0	⊗ ^{0} von 6 a an, a.
12	19.7	20.6	21.4	11.2	15.0	15.8	16.0	9.4	10.7	11.2	74	80	83	N 1	NW 3	W 5	10	10	10	0.6	
13	26.3	**26.6**	26.3	11.7	14.3	14.6	13.8	9.6	9.5	8.6	80	77	73	W 4	NW 2	N 2	7	10	10	0.6	⊗ ^{0} n.
14	22.3	20.7	19.0	11.0	14.8	15.8	15.2	9.9	10.4	10.9	80	78	85	E 1	NW 3	NW 2	2	8	10		
15	15.1	16.6	15.9	14.0	18.4	17.2	15.0	12.8	12.4	11.9	81	85	93	0	NW 2	NNE 2	10	10	10	0.0	⊗ ^{0} sch. von 6 a an, ⊗ ^{0} tr. p.
16	16.6	15.5	12.9	13.6	14.6	16.0	15.8	11.8	12.1	12.2	95	89	91	N 1	N 2	0	10	10	5	0.5	⊗ ^{0} sch. n, u. von 11^{30} p. an.
17	11.4	12.5	10.8	14.4	16.2	14.3	15.6	12.5	10.9	11.8	91	91	89	NW 2	NNE 2	N 1	9	10	10•	0.0	⊗ ^{0} sch. n, ⊗ ^{0} tr. a, p.
18	09.9	10.7	11.6	13.5	18.2	19.7	20.5	13.2	13.8	12.3	85	81	69	SE 1	NNE 2	NE 1	10	10	5	0.0	⊗ ^{0} tr. n.
19	14.7	15.4	16.4	16.4	19.6	20.2	20.1	13.8	13.7	13.4	81	78	77	E 1	N 3	NNE 2	4	2	0		
20	19.7	20.9	21.8	17.5	22.9	22.0	21.3	14.3	14.5	15.1	69	74	80	E 1	NW 3	NW 1	2	1	1		
21	22.6	22.2	22.8	16.7	19.2	21.4	21.8	14.3	**15.4**	13.3	87	81	69	E 1	NW 3	W 3	7	4	0		≡ ^{0} n.
22	23.0	23.4	20.7	17.0	18.2	16.0	17.6	13.5	12.8	13.9	87	95	93	WNW 4	NNW 4	0	5	10	7		≡ ^{0} 7 - 7^{30} p.
23	18.2	19.2	19.3	15.5	18.4	17.0	15.8	12.8	13.4	12.6	81	93	95	E 2	NW 4	NNW 2	10•	10	10	1.5	⊗ ^{0} n.
24	20.5	20.5	19.1	13.3	13.8	15.0	14.8	11.3	11.0	10.9	97	87	87	NE 4	NE 3	NE 1	10•	10	9	0.6	⊗ ^{0} u. ≡ ^{2} n.
25	14.8	11.6	10.5	12.7	17.2	19.2	19.8	12.4	14.3	14.6	85	87	85	E 2	E 3	NE 2	4	2	10		⊗ ^{0} u. ⊼ p.
26	06.6	05.3	04.1	12.3	24.8	**25.8**	21.0	13.8	13.0	12.6	59	53	68	E 1	0	0	3	9	3	0.7	⊗ ^{0} u. ⊼ n.
27	00.6	03.6	02.6	18.2	18.2	19.0	18.4	13.4	14.6	14.0	81	89	89	SE 1	NE 2	NW 3	10	3	10	1.1	⊗ ^{0} u. ≡ ^{0} n.
28	00.7	00.6	99.6	14.5	15.4	16.8	15.5	12.3	13.2	12.7	95	93	97	NW 3	0	N 3	10•	10	10	9.0	⊗ n, ≡ ⊗ a, p.
29	00.7	00.7	00.2	14.9	16.2	15.6	15.0	12.5	11.8	11.6	91	89	91	W 1	W 3	0	7	10	10	3.0	⊗ ^{0} n, a, p.
30	99.2	99.0	98.5	14.2	16.0	16.0	15.6	12.1	11.2	11.8	89	83	89	W 1	W 3	SE 1	8	8	9	0.5	⊗ ^{0} p.
31	98.8	97.5	**97.1**	13.8	16.8	16.8	18.0	11.9	12.3	11.3	83	87	74	SE 1	N 4	NE 2	9	7	5	0.6	
M.	12.9	13.1	12.7	13.7	16.6	16.8	16.4	11.8	11.9	11.6	84	84	84	1.5	2.7	1.8	7.1	7.2	7.1	24.9	

August.

Datum.	Luftdruck. 900 oder 1000 + 8	2	7	Luft-Temperatur. Min.	8	2	7	Absolute Feuchtigkeit. 8	2	7	Relative Feuchtigk. 8	2	7	Richtung und Stärke des Windes. 8	2	7	Bewölkung. 8	2	7	Niederschl.	Bemerkungen.
1	97.6	97.7	98.3	14.4	15.2	15.6	15.0	11.7	11.5	11.6	91	87	91	NE 5	NE 4	NE 4	10	8	10		
2	98.2	99.4	99.4	13.6	15.6	17.0	16.0	11.5	11.6	11.8	87	81	87	N 1	NE 3	NE 4	3	4	7		
3	02.5	03.8	04.8	14.2	16.0	16.4	15.8	11.8	10.9	11.4	87	78	85	0	NW 3	NW 3	9	5	8		
4	05.5	05.3	05.1	14.0	15.6	16.0	15.4	10.9	11.5	11.3	83	85	87	NW 2	W 4	0	9	10•	10	0.0	⊗ ^{0} tr. n, a, ⊗ ^{0} p.
5	02.6	02.3	02.2	14.0	16.0	16.6	17.0	11.5	12.0	12.0	85	85	80	N 1	NW 3	NW 1	9	7	3	0.7	
6	04.3	07.0	06.6	13.5	16.0	16.6	17.0	11.8	11.7	12.2	87	83	85	0	NE 2	NE 3	10	4	3		
7	09.3	11.6	13.6	13.7	17.2	17.0	15.8	12.1	12.2	12.2	83	85	91	0	NW 2	W 1	2	8	10•		⊗ ^{0} p.
8	13.9	14.1	13.5	14.3	16.2	17.6	18.0	12.2	11.1	14.0	89	74	70	E 2	E 2	E 2	4	6	8	4.1	
9	14.0	12.4	07.3	14.6	17.1	19.0	19.8	12.0	11.7	11.1	83	72	64	NE 1	ENE 2	SE 2	3	4	10	4.1	⊗ n.
10	05.1	04.6	04.1	16.7	18.6	**20.2**	18.4	11.8	11.3	10.2	74	64	68	SE 1	SW 5	WSW 5	5	3	2	1.3	⊗ ^{0} u. ⊼ n.
11	01.3	01.4	04.9	15.8	17.8	19.0	15.8	9.7	9.8	10.3	64	60	77	SW 1	S 2	W 7	9	8	10•		⊗ ^{0} p.
12	12.6	13.4	12.4	12.1	13.2	17.0	14.4	9.0	8.5	8.7	80	59	72	SW 3	NW 1	E 2	8	8	10	5.3	⊗ ^{6} n, p.
13	09.0	10.6	11.4	12.7	17.8	17.4	15.4	10.3	12.0	11.6	68	81	89	SSW 5	0	W 4	10	10	10	2.0	⊗ ^{0} n, ⊗ a, p.
14	13.9	17.0	17.9	10.8	11.8	12.4	11.0	8.2	8.6	8.7	80	80	89	SSW 5	W 5	NW 5	10	10•	10	36.1	⊗ n, a, p.
15	19.3	**19.9**	19.1	**9.8**	11.4	11.4	11.8	8.0	8.1	8.3	80	81	81	NW 4	NW 3	0	10	10	9	10.0	⊗ ^{0} n, p.
16	17.0	13.8	10.9	10.8	12.0	15.0	12.0	8.6	8.5	9.2	83	67	89	E 3	SW 1	ENE 2	10	10	10	0.7	
17	09.6	11.2	11.5	10.9	12.6	12.6	11.7	7.8	8.6	8.4	72	80	83	NE 3	NE 4	N 5	8	9	10•	5.7	⊗ n, a.
18	10.3	10.2	10.1	10.5	12.2	12.5	11.9	9.6	9.8	9.5	91	91	93	NE 5	NE 4	NE 5	10	10	10•	4.6	⊗ ^{0} n, a, ⊗ ^{0} tr. p.
19	09.1	09.6	09.2	11.3	12.2	13.3	12.8	10.0	9.8	9.5	95	87	87	NE 3	NE 3	NE 3	10	10	10	5.6	⊗ ^{0} n, a.
20	08.8	08.3	07.0	11.9	13.7	13.8	13.8	10.3	10.5	10.5	89	91	91	0	NE 3	NE 3	10	10	9	0.8	
21	05.6	06.3	08.1	12.7	13.7	15.4	14.6	10.7	11.6	11.5	93	89	93	E 1	E 1	0	10	10	7	0.0	⊗ ^{0} von 7^{30} a an, a, p.
22	11.1	10.9	11.5	13.6	13.6	16.7	16.4	10.4	12.2	12.6	91	87	91	W 3	N 1	W 3	9	6	8	1.9	⊗ ^{0} n, ⊗ ^{0} sch. 6 p.
23	12.9	12.7	12.0	13.4	15.6	17.8	17.2	12.3	**13.2**	12.9	93	87	89	0	ENE 3	NE 2	6	4	5	0.1	
24	10.9	10.8	11.1	15.2	18.6	20.0	19.2	10.1	10.2	11.3	63	58	68	SE 2	NW 2	0	7	5	4		
25	09.7	10.0	11.5	15.5	18.2	19.7	18.4	9.5	12.5	11.6	61	73	74	E 1	SE 1	0	4	7	8	0.2	⊗ ^{0} n.
26	14.4	13.6	12.5	15.5	17.0	19.2	18.6	12.5	12.8	11.8	87	77	74	0	0	SE 1	10	9	10		
27	12.8	11.4	08.7	14.7	15.0	17.0	15.5	11.3	11.1	10.1	89	77	77	SE 1	0	S 1	9	10	9	0.7	⊗ ^{0} n, p.
28	08.5	10.5	12.7	13.7	14.2	15.3	14.4	9.4	9.6	9.4	78	74	77	0	SW 3	W 3	10	9	10	2.6	⊗ ^{0} n, ⊗ ^{0} tr. a, ⊗ ^{0} sch. p.
29	98.3	**96.4**	99.7	13.0	13.0	13.0	13.0	8.7	8.2	8.3	78	74	75	SW 5	W 6	SW 4	10•	10•	10	1.6	⊗ ^{0} n, ⊗ a, ⊗ ^{0} p.
30	05.7	11.1	12.9	11.1	12.4	12.6	10.0	8.9	8.7	8.0	85	81	87	NW 6	W 6	SW 6	9	10•	10	13.9	⊗ sch. n, ⊗ ^{0} a, p.
31	01.5	00.2	97.7	10.0	13.0	13.4	11.6	7.8	9.0	**7.2**	70	78	72	SSW 5	SW 7	SW 6	10	10	10•	2.7	⊗ ^{0} n.
M.	08.2	08.6	08.6	13.2	14.9	16.0	15.1	10.3	10.6	10.6	82	78	82	2.2	2.8	2.8	8.2	7.9	8.4	104.7	

Aalesund. **1925.**

$H = 2\,m$, $H_b = 6.3\,m$ — $\varphi = 62^0\ 28'$ N

$C_g = 1.55$ mb bei 1020 mb — $\lambda = 6^0\ 10'$ E

September.

Datum.	Luftdruck. 900 oder 1000 + 8	2	7	Luft-Temperatur. Min.	8	2	7	Absolute Feuchtigkeit. 8	2	7	Relative Feuchtigk. 8	2	7	Richtung und Stärke des Windes. 8	2	7	Bewölkung. 8	2	7	Niederschl.	Bemerkungen.
1	89.4	89.5	87.9	9.5	11.0	10.6	10.2	7.4	7.4	7.5	75	78	81	SW 8	W 8	SW 7	10	10•	10•	14.3	⊜⁰ n, ⊜ a, p.
2	85.9	88.7	90.2	8.5	11.0	11.0	11.2	8.3	8.8	8.9	85	91	91	WNW 8	WNW 9	NW 6	10•	10•	10	20.4	⊜ n, a, ⊜⁰ p.
3	90.6	92.2	93.5	8.8	10.3	10.6	10.0	8.4	8.2	8.3	91	87	91	NW 2	NW 5	NW 6	10•	10	10•	17.0	⊜ n, ⊜⁰ a, p.
4	90.1	88.0	88.5	8.4	8.6	11.6	11.7	7.5	9.2	9.4	91	91	93	SW 7	NW 4	NW 5	10•	10•	10•	15.7	⊜ n, a, p.
5	91.4	95.8	96.9	8.1	10.3	11.2	12.6	8.4	8.6	9.6	91	87	89	E 1	NE 3	N 1	9	7	10	29.4	⊜ sch. n, ⊜⁰ a.
6	95.3	97.0	98.4	9.9	10.8	12.1	11.8	9.2	9.6	9.4	95	93	93	NW 5	NNW 4	NNW 5	10•	10•	10	20.5	⊜ n, ⊜⁰ a, p.
7	02.2	03.4	04.4	10.6	11.6	12.0	11.6	9.4	8.9	9.4	93	87	93	NNW 4	NNW 2	NNW 2	10	8	7	5.5	⊜⁰ n, a.
8	05.6	05.5	05.1	9.6	10.4	12.4	10.4	8.7	8.8	8.7	93	83	93	NW 3	WNW 2	0	9•	8	9	2.6	⊜⁰ n, p.
9	05.4	06.3	07.2	8.0	9.0	13.0	12.0	8.1	9.3	9.2	95	85	89	SE 1	NE 1	0	6	6	5	0.0	
10	09.4	10.2	10.6	8.7	10.0	13.9	12.2	8.4	10.4	9.6	93	89	91	0	N 1	NE 3	10	4	4		
11	13.0	14.3	15.2	7.8	8.8	13.0	11.2	7.6	7.0	8.6	91	63	87	E 1	ENE 4	0	4	2	0		
12	18.7	19.8	20.5	8.5	10.0	12.2	11.2	8.3	8.8	8.1	91	85	81	SE 1	NE 3	N 3	4	7	10		⊜⁰ tr. a, p.
13	23.0	23.0	**23.1**	9.3	10.3	12.2	11.2	7.5	7.6	7.2	80	72	73	SW 3	SW 3	SW 3	10	10	8	0.8	⊜ 2-3 a.
14	16.8	15.8	16.8	7.4	12.6	14.0	13.3	6.2	7.7	8.5	57	65	75	S 4	SSW 4	SW 5	7	10	10		⊜⁰ tr. a, p.
15	20.3	21.2	21.2	11.0	13.8	14.7	13.2	8.7	9.6	9.5	75	77	85	SW 2	SW 4	0	10	10•	10	0.0	⊜⁰ tr. n, a.
16	18.1	16.8	15.6	11.9	13.0	14.0	12.8	9.3	10.6	10.0	85	89	91	0	NW 1	SW 1	10	10	10	0.0	⊜⁰ tr. p.
17	13.7	13.6	12.8	11.0	11.9	14.2	12.6	9.5	**10.7**	10.1	93	89	93	0	0	0	9	7	8	0.0	⊜⁰ tr. n.
18	09.2	08.2	08.2	10.4	12.4	12.8	11.6	7.8	10.0	9.1	73	91	89	S 1	WNW 4	0	3	10	10•		⊜⁰ tr. p.
19	07.9	08.8	06.0	10.4	11.4	12.7	11.3	9.1	8.6	8.6	91	80	87	W 3	N 1	S 1	9	2	10	1.2	⊜⁰ n.
20	91.7	89.6	87.9	9.8	**14.9**	11.4	10.2	7.2	7.7	**5.2**	57	77	56	E 6	W 4	WSW 4	10	10	10	0.0	⊜⁰ tr. von 7 a an, ⊜⁰ a, ⊜⁰ tr. p.
21	89.5	91.0	87.5	10.2	12.6	13.6	10.0	6.9	7.8	7.6	63	68	83	E 1	NNE 2	0	9	9	10	2.0	⊜⁰ p.
22	87.4	91.2	92.4	9.4	10.4	11.6	11.6	7.4	6.9	6.1	78	68	60	SW 4	SW 5	SSW 8	10•	8	5	4.8	⊜⁰ n. a, p.
23	85.3	82.0	**81.6**	9.9	11.6	12.2	10.8	6.1	8.0	8.3	60	75	87	E 3	0	0	10•	4	10	1.6	⊜⁰ von 7 a an, a, p.
24	93.3	97.2	00.1	9.8	10.5	12.8	11.4	7.3	6.9	7.7	77	63	77	W 3	SW 3	NW 1	10•	8	9	8.8	⊜ n, ⊜⁰ tr. a.
25	05.6	06.6	07.1	10.1	11.8	11.8	10.9	7.6	7.8	7.8	74	77	81	SW 4	W 4	W 3	10	8	9	0.3	⊜⁰ n, ⊜⁰ tr. a, p.
26	07.7	07.9	09.8	8.9	9.3	10.1	10.0	7.3	6.9	6.9	85	75	75	NE 1	NW 2	NE 1	10	10	9	0.0	
27	12.5	15.3	17.9	8.4	8.6	11.2	8.5	7.0	8.6	6.6	85	87	80	W 1	NW 2	NNW 2	10	10	9	1.5	⊜⁰ n, ⊜ a.
28	19.3	16.1	09.3	**5.9**	7.2	10.2	11.6	6.7	6.5	5.7	89	70	56	SE 2	SE 1	S 4	10	5	10•	7.5	⊜⁰ n, u. von 6³⁰ p an.
29	07.0	10.3	13.4	6.7	11.0	10.8	9.6	8.1	7.0	6.6	83	72	74	SSW 6	SSW 6	WSW 3	10•	10	3•	6.7	⊜ n, ⊜⁰ a, p.
30	18.8	18.0	16.3	8.3	9.9	12.3	12.6	6.4	6.4	6.9	70	60	63	W 3	SW 4	SW 6	5	9	10	6.4	⊜⁰ n.
M.	04.1	04.8	04.8	9.2	10.8	12.2	11.3	7.9	8.3	8.2	82	79	82	2.9	3.2	2.7	8.8	8.1	8.5	167.0	

Oktober.

Datum.	8	2	7	Min.	8	2	7	8	2	7	8	2	7	8	2	7	8	2	7	Niederschl.	Bemerkungen.
1	13.7	17.9	19.2	9.4	9.6	11.6	10.9	7.4	7.0	6.8	85	69	70	W 7	W 7	SW 6	10•	8	10	11.2	⊜ n, ⊜⁰ a, p.
2	12.8	17.6	15.3	8.1	8.7	10.0	9.0	7.3	6.6	6.2	87	72	72	NNW 4	SW 5	W 4	10•	8	10•	21.9	⊜ n, ⊜⁰ tr. a, ⊜⁰ p.
3	05.2	09.3	12.2	8.3	9.2	7.9	5.2	7.1	5.3	5.0	81	67	75	W 7	NW 7	NW 7	10•	10	10	12.6	⊜ n, ⊜⁰ a, ⊜⁰ u. △⁰ p.
4	17.1	16.3	13.4	2.6	5.4	6.8	7.9	5.4	5.8	6.6	81	78	83	SW 6	WNW 7	WNW 6	10•*	10	10•	7.9	⊜ u. △⁰ n, ⊜⁰ u. △⁰ a, p.
5	18.9	22.4	21.3	3.6	6.2	6.4	6.0	4.8	4.6	4.7	68	64	67	NNW 5	NNW 4	NNW 1	9	10	7	5.8	⊜⁰ u. △⁰ n, ⊜⁰ tr. a, p.
6	05.0	02.5	06.0	5.4	9.7	10.2	8.0	7.5	7.8	6.4	85	85	81	SW 6	SW 7	SW 8	10•	10	10•	1.7	⊜⁰ n, a, p.
7	13.4	16.4	19.5	3.7	5.2	7.2	4.2	5.8	5.9	5.2	87	77	85	NNW 7	NNW 6	NNW 5	10•*	8•	10	9.2	⊜ u. △⁰ n, ⊜⁰ u. △⁰ a, p.
8	**22.8**	21.6	17.7	2.6	4.4	6.8	7.0	5.4	5.4	5.9	87	73	78	SW 3	SW 4	SW 5	10•	10	10	7.9	⊜⁰ n, a, p.
9	13.7	12.2	12.6	2.6	8.9	10.4	9.2	7.4	**8.0**	7.8	87	85	91	W 8	W 7	W 8	10	10	10•	2.8	⊜⁰ n, ⊜⁰ tr. a, ⊜⁰ p.
10	15.1	16.8	16.3	3.6	4.7	4.2	3.8	4.9	4.2	4.7	77	69	78	NNW 8	NNW 7	N 4	10•*	10	10	2.8	⊜⁰ u. ⊜ ✱⁰ n, ⊜⁰ u. △⁰ a, ✱⁰ p.
11	14.3	11.7	08.3	0.5	2.7	2.7	3.6	4.8	4.5	4.6	85	81	78	NW 7	W 7	W 5	10	10•*	10	3.1	⊜ ✱⁰ n, a, p.
12	06.0	05.3	04.6	1.4	3.6	3.0	2.0	4.9	4.8	4.8	83	85	91	NNW 3	N 5	N 6	7	7	10•*	7.6	⊜ ✱⁰ n, ✱⁰ u. △⁰ sch. a, p.
13	00.6	95.7	97.0	0.6	0.6	1.1	0.6	4.4	4.5	4.4	91	91	89	SW 2	N 1	E 1	10•	10•*	9	11.3	✱ n, ⊜ ✱⁰ a, p bis 6 p.
14	02.3	05.4	06.8	**-1.6**	**-1.6**	1.0	0.4	3.6	3.4	3.8	87	70	80	E 2	E 2	0	8	3	3	2.9	✱⁰ n.
15	06.0	05.5	08.4	**-1.6**	1.0	2.8	1.4	4.7	5.0	4.6	94	90	91	SE 1	WSW 3	0	7•	8	10	4.0	✱ n, ⊜⁰ u. ⊜ ✱ a.
16	07.5	07.9	09.6	0.1	3.4	3.1	1.6	5.0	4.7	4.6	85	83	89	NNW 6	N 4	NW 2	10△*	10	10	12.2	⊜ ✱ u. ⊜⁰ n, ⊜ ✱⁰ a, p.
17	07.5	07.1	05.6	0.6	1.6	4.2	1.4	4.6	4.8	4.2	89	78	81	SW 2	SW 3	SE 1	10•*	5	1	11.7	⊜ ✱⁰ n, a.
18	08.9	12.0	13.3	-1.4	-0.9	1.8	-0.4	3.5	3.8	**3.3**	83	73	74	SE 1	SE 1	SE 2	0	1	10	2.6	
19	15.1	16.6	16.8	-0.9	1.0	1.2	2.0	4.1	4.7	4.5	83	93	85	SE 1	E 1	SSW 3	7	10	5	1.3	✱⁰ n, ⊜ ✱⁰ a, ⊜⁰ p.
20	14.8	13.5	11.4	-0.8	2.2	4.6	3.9	4.5	4.3	4.2	85	68	69	SW 4	SW 3	SE 1	7	9	1	4.6	⊜⁰ n.
21	03.5	00.4	96.5	0.2	1.4	3.4	3.4	3.4	3.7	**3.3**	67	64	57	NE 2	E 2	E 2	1	7	8		
22	90.4	89.4	87.6	0.4	7.4	9.0	8.4	5.5	5.0	5.2	72	59	63	SE 4	E 3	SE 3	10•	10	8	3.0	⊜⁰ n, ⊜⁰ tr. a, ♊² 10-12 p.
23	83.5	80.9	**78.1**	7.1	10.0	10.8	12.6	5.5	6.1	6.5	60	63	60	SE 5	E 2	SE 3	9	10•	7	0.0	⊜⁰ tr. a, p.
24	79.6	80.9	83.8	9.4	12.4	**13.6**	10.6	6.3	6.5	5.7	59	56	59	SSE 1	SSE 3	0	7	10	10	0.0	⊜⁰ tr. a.
25	86.4	88.8	91.1	8.5	10.8	12.4	11.8	6.5	7.0	6.8	68	65	66	0	SE 2	S 2	8	10	7	0.0	⊜⁰ tr. a, ⊜⁰ p.
26	96.6	98.6	97.8	8.9	9.6	10.8	9.1	6.6	6.3	6.0	74	65	70	S 2	SE 2	0	9	5	4	1.3	⊜⁰ tr. n.
27	93.3	94.1	92.6	8.0	11.4	12.6	10.2	6.4	6.6	5.9	64	61	64	S 2	S 2	0	2	5	9		
28	91.4	93.6	96.2	6.7	8.0	8.2	8.4	6.3	7.2	6.4	80	89	78	0	NE 0	NE 1	10	10	5		⊜⁰ a, p.
29	03.5	03.2	02.9	6.8	7.8	8.6	7.6	6.2	6.4	6.5	80	77	83	SW 2	E 2	SE 1	5	9	10	7.4	⊜ n, ⊜⁰ p.
30	10.3	13.5	15.0	6.7	7.0	8.0	6.6	6.8	7.0	6.3	91	87	87	SE 1	SE 1	SE 1	10•	9	10	3.4	⊜⁰ n, a.
31	17.5	17.7	18.8	5.6	6.0	8.2	7.6	5.7	6.4	6.7	80	80	87	SE 2	0	0	10	6	10	0.6	⊜⁰ 6 p.
M.	05.7	06.3	06.3	3.7	5.7	6.9	5.9	5.6	5.6	5.4	80	74	77	3.6	3.5	2.8	8.3	8.3	8.2	160.8	

$H = 2$ m, $H_b = 6.3$ m — $\varphi = 62^0\ 28'$ N

$C_g = 1.55$ mb bei 1020 mb — $\lambda = 6^0\ 10'$ E

November.

Datum.	Luftdruck. 960 oder 1000 + 8	2	7	Luft-Temperatur. Min.	8	2	7	Absolute Feuchtigkeit. 8	2	7	Relative Feuchtigk. 8	2	7	Richtung und Stärke des Windes. 8	2	7	Bewölkung. 8	2	7	Niederschl.	Bemerkungen.
1	19.6	18.2	17.9	5.8	7.5	8.4	7.9	6.7	6.6	6.3	87	81	80	E 3	E 3	E 2	10●	10	10	4.2	◎⁰ n, ◎⁰ tr. a, ◎⁰ p.
2	15.9	15.1	12.4	5.9	5.9	5.7	7.6	6.0	6.0	5.5	87	87	70	SE 5	E 3	E 3	10●	10●	10	7.2	◎ n, a, ◎⁰ p bis 2³⁰ p.
3	08.7	05.9	02.8	0.2	5.4	5.7	5.6	5.6	6.0	5.4	83	89	81	SE 1	E 1	E 1	10	8	10	5.3	◎⁰ n, a.
4	97.9	99.9	02.4	3.8	5.4	4.8	4.2	5.9	5.6	5.1	87	87	83	ENE 3	ENE 3	ENE 3	10	10●	7	1.2	◎⁶ tr. n, ◎⁰ sch. p.
5	01.6	99.8	99.8	2.4	2.6	4.9	2.8	4.8	5.5	3.9	87	85	69	E 1	WNW 5	WNW 4	10●	10	10	0.9	◎⁰ von 6 a an, ◎⁰ u. △⁰ a, ◎ ✳⁰ p.
6	98.3	97.8	00.2	0.0	2.2	1.5	1.2	4.9	4.7	4.6	91	91	91	N 7	SE 2	SE 1	10	8●	10	6.3	◎ ✳ n, ◎ ✳⁰ a.
7	01.7	00.5	99.6	-1.4	-1.2	1.2	-0.5	3.7	4.3	4.0	89	85	89	E 3	0 E	1	10	10	1	0.9	✳⁰ fl. n, a, ✳⁰ p.
8	99.6	99.5	99.4	-3.0	-3.0	-1.9	-3.6	3.2	3.0	**2.7**	85	73	77	E 1	E 3	E 3	1	1	2	0.5	
9	98.7	99.1	01.6	-4.2	-2.2	-0.4	-1.0	3.1	3.1	3.0	80	69	68	SE 2	SE 2	SE 2	4	9	5	—	
10	08.6	11.5	13.7	-2.9	-1.4	1.6	-1.0	3.2	3.7	3.1	77	70	74	SE 3	SE 2	E 1	3	2	2		
11	21.5	23.6	24.0	-1.7	-0.4	2.2	2.2	4.1	4.3	4.1	91	80	75	NE 1	SW 3	SW 3	7	10	10	2.9	✳ n, ✳⁰ fl. a.
12	23.2	22.7	22.1	-2.2	5.4	7.6	7.4	5.1	5.3	5.0	77	68	60	SW 5	SW 7	SW 6	10	9	10	0.2	◎⁰ n.
13	21.1	20.5	18.6	5.0	6.6	7.2	5.0	4.3	4.3	4.3	59	57	65	S 4	S 3	S 1	6	9	3		
14	14.1	14.5	14.7	4.1	4.7	6.0	5.0	4.5	5.1	4.8	69	73	74	S 1	S 1	S 2	9	10	10		
15	16.6	17.0	16.6	3.0	4.0	4.6	4.8	4.2	4.1	4.2	69	65	65	S 2	SE 4	SE 4	10	10	10		
16	13.6	16.9	20.6	3.5	6.7	2.8	4.0	4.2	5.2	5.5	57	93	89	SSE 4	NW 2	W 2	10	7	2●	0.0	◎⁰ n, a, p.
17	29.4	31.2	**32.2**	2.2	4.0	5.4	6.2	5.3	5.1	5.3	87	77	75	NW 1	S 2	S 2	10	10	10	9.0	◎⁰ n.
18	29.7	29.0	28.5	3.9	7.4	8.3	8.2	5.4	5.7	5.9	70	70	73	SSW 6	WSW 7	SW 7	10	10	10	—	◎⁰ p.
19	21.7	18.3	16.2	6.5	8.3	**10.0**	9.2	6.6	7.7	**8.1**	81	85	93	SW 8	SW 9	SW 8	10	10●	10●	0.1	◎⁰ tr. n, ◎ a, p.
20	17.3	19.4	18.8	4.6	7.2	6.4	5.6	6.2	7.9	5.4	81	80	80	NW 4	NW 3	S 1	10	10	10	18.1	
21	14.0	14.3	12.7	2.0	3.0	4.2	2.9	5.3	5.4	5.2	93	87	91	0	0	0	10●	10	10	4.0	◎⁰ n, a, p.
22	01.9	95.4	99.2	1.0	6.3	6.2	4.0	6.1	6.0	5.6	85	85	91	SW 4	SW 4	NW 8	10●	10●	10●	6.3	◎⁰ u. ◎ ✳⁰ n, ◎ a, p.
23	07.4	08.4	09.2	0.6	2.2	2.7	3.8	4.8	5.0	4.4	89	89	74	NNW 4	NNW 6	NNW 7	9	10●	10	18.5	◎ ✳⁰ u. △⁰ n, ◎ ✳⁰ sch. a, p.
24	04.9	03.9	01.8	-1.9	-1.4	0.7	-0.7	3.8	4.1	4.0	93	83	91	NNW 5	NNW 6	NNW 4	9●	7	10	8.6	◎ ✳⁰ n, ✳ u. △⁰ a, p.
25	06.3	09.3	11.1	-2.1	-0.3	-0.2	1.2	3.8	4.1	3.8	85	89	75	N 6	NE 2	NE 5	10	8	10△	12.7	✳ n, ✳ u. △⁰ a, p.
26	08.1	97.1	**93.4**	-2.0	0.0	1.6	1.9	4.0	4.2	4.7	87	81	89	SW 3	SW 6	NW 5	10	10	10●	12.7	✳ n, ✳⁰ a, ◎ ✳⁰ p.
27	95.0	94.7	94.4	-1.9	-1.4	-0.7	-0.8	3.4	4.1	3.7	81	93	83	SE 2	NE 1	NE 5	10	9	10	4.2	◎ ✳⁰ n, ◎ ✳⁰ sch. a.
28	96.3	00.8	04.2	**-4.7**	-3.8	-1.4	-1.0	2.9	3.1	3.6	81	73	73	E 4	E 3	E 1	6	7	8	1.1	✳⁰ n.
29	03.4	02.5	03.0	-4.2	-1.4	0.2	-1.5	2.8	3.7	4.0	69	78	95	E 5	SE 4	SE 3	7	10+	10+		✳⁰ von 1³⁰ p an, ✳ p.
30	09.5	10.1	10.0	-1.9	-1.4	-2.0	-3.6	3.7	**2.7**	2.8	89	67	80	E 2	E 1	E 2	10	5	7	6.6	✳ n, ▥ abd.
M.	10.2	09.9	10.1	0.7	2.6	3.4	2.9	4.6	4.9	4.6	82	80	79	3.3	3.3	3.2	8.7	8.6	8.2	131.5	

December.

Datum.	Luftdruck. 960 oder 1000 + 8	2	7	Luft-Temperatur. Min.	8	2	7	Absolute Feuchtigkeit. 8	2	7	Relative Feuchtigk. 8	2	7	Richtung und Stärke des Windes. 8	2	7	Bewölkung. 8	2	7	Niederschl.	Bemerkungen.
1	07.6	08.4	08.6	-3.8	-1.8	1.2	-2.0	3.8	4.8	3.7	93	95	93	E 2	E 2	E 1	10+	10+	4	1.0	✳⁰ n, ✳ a, p.
2	11.0	13.5	16.2	-2.7	-0.6	0.4	-1.6	4.1	4.4	3.9	93	93	95	E 1	S 1	S 1	10+	10	10+	5.9	✳⁰ n, ✳ a, p.
3	21.3	22.4	24.0	-2.2	-0.2	2.2	2.5	4.1	4.3	4.5	89	81	83	E 1	S 1	S 2	10	7	10	6.4	✳⁰ fl. n.
4	25.0	**25.9**	25.5	-0.5	4.7	5.0	5.2	5.4	6.9	6.0	85	93	91	SW 6	SW 6	SW 5	10	10●	10●	0.0	◎⁰ tr. n, ◎⁶ a, ◎ p.
5	22.9	18.3	10.1	4.4	5.4	6.2	6.6	5.9	5.1	5.0	87	72	69	W 4	SW 6	SW 6	10●	10	10	7.7	◎ n.
6	06.5	13.1	14.5	4.6	4.8	4.5	3.6	5.4	5.1	5.0	85	81	89	W 7	W 5	0	10●	10	10	9.1	◎ n, ◎⁰ a, p, spätabd.
7	14.5	08.9	05.5	1.2	2.2	3.6	9.4	4.4	4.7	6.4	81	80	72	E 1	E 1	S 2	10	6	2	2.7	
8	99.2	97.4	97.1	0.9	11.4	12.0	11.4	4.8	6.3	**7.2**	48	61	72	S 4	S 4	S 1	4	9	4		
9	93.3	93.0	92.9	8.4	9.4	9.2	**12.2**	5.6	5.2	6.2	63	59	59	SE 3	S 2	SW 1	6	8	10		
10	93.5	92.2	91.8	3.6	4.2	4.0	2.8	3.5	3.8	3.7	57	63	66	E 4	E 3	S 1	5	4	2		
11	94.1	97.4	99.6	0.8	1.0	1.2	1.0	4.5	4.5	4.4	91	89	89	SE 1	ESE 2	ESE 2	7	7	10+	3.0	✳ 5-7 a, ◎ ✳ von 5³⁰ p an.
12	04.3	04.2	03.3	-0.1	1.4	-0.2	0.0	4.1	4.0	3.9	80	87	85	NE 6	NE 4	NE 7	10+	6	10	9.1	◎⁰ u. ✳ n, ✳ sch. a, p.
13	98.3	00.6	05.0	-3.5	0.2	-0.4	-1.6	3.8	4.1	3.2	81	91	78	N 8	NE 2	NE 5	10+	10	10	15.0	✳ n, ✳⁰ a.
14	14.4	16.3	16.7	-5.1	-4.4	-4.5	-4.4	**2.5**	**2.5**	2.6	75	75	78	NE 3	E 3	E 3	2	2	10	1.3	
15	16.4	16.2	14.7	**-5.6**	-3.0	-3.1	-0.6	**2.5**	2.8	3.5	68	77	72	E 2	ESE 3	ESE 3	3	3	10		
16	00.6	08.7	07.7	-3.8	3.1	3.4	1.6	4.6	5.2	4.8	81	91	93	SSW 6	SSW 1	W 2	10	10	10●		✳⁰ früh, ◎ ✳⁰ u. ◎⁰ p.
17	00.4	01.6	01.9	-1.4	-1.4	1.4	-0.6	3.7	3.9	3.3	91	77	73	N 5	NW 8	NW 7	5	10+	10	25.8	✳ n, ✳ sch. a, p.
18	99.6	95.8	97.9	-4.8	-1.8	-0.4	0.0	3.4	4.3	3.4	85	95	74	N 4	NNW 7	NNE 7	10	10+	10	8.5	✳ sch. n, a, p.
19	99.1	00.6	99.7	-4.1	-1.8	-4.4	-1.9	3.7	3.1	3.7	91	91	93	NW 3	SE 3	W 1	10△	4	10+	5.5	✳⁰ u. △⁰ n, ✳⁰ a, p.
20	96.5	95.8	94.6	-4.4	-0.6	-1.7	-1.8	3.7	3.7	3.3	85	93	80	W 3	SE 4	SE 1	10+	10	10	8.2	✳ n, ✳⁰ a.
21	90.0	86.5	84.3	-4.5	-3.4	-1.8	-3.0	2.6	2.7	2.7	72	67	75	SE 5	E 2	E 2	10	10	10	1.5	
22	83.1	84.1	85.3	-3.7	-2.2	-0.2	-1.4	2.8	3.6	3.1	70	80	74	SE 3	SE 1	E 1	10	6	1		
23	84.2	83.9	85.1	-3.9	-2.6	-2.0	-2.1	2.7	2.8	2.7	70	69	70	SE 1	SE 2	SE 2	2	6	4		
24	85.0	84.4	83.7	-2.9	-1.5	-1.4	-2.4	3.0	3.1	3.0	72	75	77	SE 1	SE 1	SE 3	3	2	2		
25	82.6	~~80.7~~ 80.7	89.7 87.7	-4.1	-3.2	-2.4	-2.0	2.7	3.0	3.0	73	78	75	SE 2	SE 2	SE 2	1	4	3		
26	86.1	89.6	92.9	-4.3	1.6	2.8	2.8	4.6	5.0	4.4	89	89	77	S 1	SW 4	SW 4	8	10	10	0.1	◎ ✳⁰ n, ◎⁰ u. ◎ ✳⁰ a.
27	90.6	89.3	85.1	1.0	1.4	0.8	-0.2	3.5	3.3	3.0	69	68	68	SE 1	SE 2	SE 4	6	10	2	0.4	
28	85.3	87.1	87.9	-0.8	0.7	1.8	1.4	3.3	3.7	4.3	69	72	85	SE 1	SE 1	0	10	10	10	—	▥ n.
29	80.7	73.4	66.8	-0.7	5.3	5.0	6.2	4.8	4.3	4.7	72	67	66	SE 1	E 5	SE 6	10	10	10	0.6	◎ ✳⁰ n.
30	**57.8**	63.0	65.4	4.5	5.0	5.8	4.2	5.4	6.3	5.4	83	91	87	SW 5	SW 6	SW 6	10●	10	10	0.7	◎⁰ n, a, p.
31	71.0	77.4	87.6	2.7	3.2	3.4	2.2	5.0	5.1	5.1	87	87	95	SE 1	E 1	NE 7	5	10	10●	2.7	◎⁰ n, ◎⁰ u. ◎ ✳⁰ p.
M.	97.6	~~98.0~~ 98.4		-1.1	1.2	1.7	1.5	4.0	4.2	4.2	78	80	79	3.1	3.1	3.1	7.6	8.1	7.9	115.2	

Trondhjem. 1925.

H = 34 m, H_b = 37.0 m — $\varphi = 63^0\ 26'$ N

C_g = 1.55 mb bei 994 mb — $\lambda = 10^0\ 25'$ E

Januar.

Datum.	Luftdruck 900 oder 1000 + 8	2	7	Luft-Temperatur. Min.	8	2	7	Absolute Feuchtigkeit. 8	2	7	Relative Feuchtigk. 8	2	7	Richtung und Stärke des Windes. 8	2	7	Bewölkung. 8	2	7	Niederschl.	Bemerkungen.
1	78.4	76.8	76.8	-0.7	0.6	2.5	2.4	4.2	2.9	2.8	89	53	51	SSW 2	SSW 5	S 4	6	10	2		◍⁰ a, ≡⁰ p, ◍⁰ sch. spätabd.
2	**54.0**	55.0	55.0	-0.6	5.9	3.0	3.9	3.7	5.1	3.6	53	90	59	SSW 7	ENE 1	SW 4	10	9≡	10		
3	60.3	65.7	68.2	1.9	2.7	2.0	1.4	4.6	4.7	4.0	82	89	78	SSW 3	W 4	S 3	10•	10•*	8•	1.5	◍⁰ sch. n, mg., ◍ ✱⁰ p, ◍⁰ sch. abd.
4	75.3	78.0	80.1	0.0	1.8	2.2	1.1	4.1	3.8	4.5	78	72	90	W 3	WSW 3	SW 4	6•	5	10*	4.5	◍⁰ sch. n, mg., ✱⁰ sch. p, abd.
5	85.6	83.9	83.3	0.9	1.2	0.8	1.8	2.9	3.4	3.7	58	69	71	W 3	S 1	S 3	10	8	8	1.0	✱⁰ sch. n.
6	86.8	95.3	99.3	-1.1	-0.1	0.8	-0.6	3.5	4.5	3.6	77	92	82	SW 4	WNW 8	SW 4	10*	10*	2	1.5	✱⁰ sch. früh, ✱ sch. a, ✱⁰ sch. p.
7	89.6	85.3	90.0	-0.9	-0.6	1.0	2.9	3.7	4.2	4.7	84	85	82	S 2	S 1	W 4	10*	10•*	7	5.1	✱⁰ sch. n, ✱ a, ◍ ✱ p, ◍ ✱⁰ sch. spätabd.
8	97.3	97.0	95.8	-1.1	3.4	2.4	1.0	4.3	4.9	4.7	73	89	96	SW 4	SSW 2	SSW 3	10	10•	10•	18.8	◍⁰ sch. n, a, ◍ sch. p. ≡⁰ mg. a.
9	91.4	96.4	00.5	0.4	1.2	1.0	1.2	4.7	4.4	4.3	94	89	85	S 2	W 3	W 2	10≡	4	10*	8.4	◍⁰ sch. n, ✱⁰ sch. a, abd. △⁰ sch. abd.,
10	10.0	02.1	97.2	-0.6	0.1	1.0	3.9	3.9	4.0	4.9	83	81	80	S 2	NW 3	SW 4	10	10≡	8•	9.7	✱⁰ sch. n, mtg., ◍⁰ sch. p, abd. ≡⁰ p.
11	99.9	05.7	09.2	-0.2	6.6	7.2	7.6	**6.6**	6.5	6.0	91	86	77	W 4	SSW 3	W 4	10•≡	10	9	9.1	◍ sch. n, ◍² a, ◍ sch. mtg., ◍⁰ sch. spätabd.
12	11.8	12.9	12.1	4.0	5.3	4.7	2.8	5.3	5.1	4.4	80	79	77	S 4	S 3	S 4	9	9	7	13.9	≡⁰ mg. a.
13	09.1	07.1	06.1	-0.2	1.0	2.0	0.7	3.3	3.2	3.2	67	60	67	SSW 3	S 3	S 4	10	10	10		≡⁰ a.
14	95.2	83.9	82.2	0.5	6.6	**9.9**	7.9	3.4	4.2	4.3	47	46	55	SSW 7	SSW 7	SSW 7	10	7	8		⸝ böen a, abd.
15	86.3	86.4	91.7	3.0	3.8	2.6	2.0	4.6	4.6	4.0	77	82	75	SSW 3	SW 4	W 6	9	10•	9•△	4.5	◍ sch. n, a, ◍ ✱⁰ sch p, abd. △⁰ sch. abd.
16	98.4	98.3	99.6	0.1	2.8	5.2	6.2	4.7	6.0	6.2	82	90	88	SW 4	WSW 4	SW 4	10•*	10•	10•	16.0	◍ ✱ sch. n, ◍² a, p, ◍ abd.
17	09.7	13.2	13.0	2.6	6.0	5.4	4.0	5.4	6.1	5.4	78	91	88	W 7	SSW 4	SSW 3	10•	10•	7	49.5	◍² sch. u. ⸝ n, ◍ mg., ◍⁰ sch. mtg., p.
18	08.9	09.9	04.8	2.0	4.4	6.6	4.8	4.0	5.4	4.6	63	74	71	S 2	SSW 3	S 4	9	4	10	0.5	◍⁰ sch. a, ◍ sch. spätabd. ⸝ böen spätabd.
19	20.2	32.8	37.5	1.0	2.0	2.0	2.8	3.4	4.3	3.0	64	82	54	WNW 9	W 8	W 5	6△	10•△	10	5.1	◍ ✱⁰ sch., △⁰ u. ⸢ n, ✱⁰ sch u. △⁰ a.
20	34.9	34.1	33.3	-0.5	0.3	-0.5	-1.4	3.5	3.3	2.8	74	74	68	SSW 4	SSW 3	S 2	10	1	0	1.0	
21	32.2	31.1	30.8	-4.7	-4.5	-2.7	-4.3	2.8	2.7	2.6	83	72	78	S 3	SSW 2	S 3	0	0≡	0		≡⁰ mtg. p.
22	28.2	25.8	23.6	-5.3	-3.3	-2.3	-2.6	2.7	3.1	3.0	75	80	79	S 2	S 1	S 1	5	5≡	0		≡⁰ a, mtg., p.
23	19.0	18.9	19.1	-3.9	-3.5	-2.1	-1.0	2.6	3.0	3.3	73	75	77	SSW 3	S 2	S 2	7	6≡	10≡		≡⁰ a, mtg., p, abd.
24	22.6	25.4	28.5	-4.3	1.1	2.4	2.1	4.0	3.9	4.8	81	72	89	SSW 3	S 3	SSW 3	10	10•≡	10•		◍⁰ sch. p, abd. ≡⁰ mtg., p.
25	37.1	39.8	41.1	1.1	1.8	2.4	0.1	4.7	4.6	3.9	90	84	83	S 2	S 3	SSW 4	10	8	0	1.5	◍⁰ sch. n.
26	**41.2**	40.1	38.0	-4.8	-3.0	0.5	1.4	3.1	3.9	4.0	83	82	78	SSW 4	SSW 3	SSW 4	10	10	10		
27	31.9	29.1	26.2	-3.5	1.2	1.4	0.4	4.4	4.0	3.4	89	78	72	SSW 4	S 3	S 3	10	10	10		
28	17.5	14.9	13.1	-6.6	-6.5	-5.0	-6.5	2.2	2.2	**1.8**	77	69	63	S 3	S 3	S 4	5	6	5		⌣⁰ a.
29	06.0	96.6	86.8	**-9.1**	-8.1	-1.4	-2.6	1.9	1.9	2.6	74	45	68	ENE 1	ESE 3	S 4	9	5	0		⌣⁰ a, ≡⁰ a.
30	73.2	71.2	71.5	-8.5	0.5	3.7	2.2	3.4	2.6	4.8	72	43	89	SSW 4	SSW 3	SSW 5	7	10	10•	0.0	✱⁰ sch. früh, ◍ sch. spätabd.
31	72.0	71.5	77.5	-0.3	1.5	3.0	2.0	3.7	3.7	4.1	72	66	77	W 1	NW 1	SSW 2	10	10≡	10≡	5.5	≡⁰ p, abd. ◍⁰ sch. spätabd.
M.	02.7	02.7	03.0	-1.3	1.0	2.0	1.5	3.8	4.1	4.0	76	75	76	3.5	3.2	3.6	8.6	8.0	7.1	157.1	

Februar.

Datum.	Luftdruck 900 oder 1000 + 8	2	7	Luft-Temperatur. Min.	8	2	7	Absolute Feuchtigkeit. 8	2	7	Relative Feuchtigk. 8	2	7	Richtung und Stärke des Windes. 8	2	7	Bewölkung. 8	2	7	Niederschl.	Bemerkungen.
1	86.5	91.8	97.4	0.8	1.2	1.1	0.4	4.1	3.6	4.4	82	71	92	SSW 2	SSW 3	SSW 4	10*	5	10*	2.5	✱⁰ sch. früh.
2	06.5	99.2	94.1	-1.5	-0.7	0.8	2.4	3.8	3.5	3.5	86	71	65	SSW 3	SSW 3	SSW 4	5*	10	6	0.3	✱⁰ mg., ✱⁰ sch. a, p, ≡⁰ mtg.
3	96.2	95.9	89.7	-1.0	3.6	2.6	2.0	3.8	4.6	3.0	63	82	57	W 5	SSW 3	SSW 4	5	5	7	10.5	◍ sch. u. ✱⁰ sch. n, ◍ ✱ sch. a ⸝ p, abd.
4	90.2	94.2	97.1	-0.4	-0.4	1.1	0.8	3.8	3.8	3.7	85	77	76	SW 3	W 5	W 6	10	10*	7*	8.6	◍ u. ✱ n, ✱ sch. u △ sch. a, ⸢ p, ✱⁰ sch. p, abd.
5	79.9	80.3	77.2	-0.5	5.6	2.8	1.8	3.6	4.3	3.4	54	75	65	SSW 4	WSW 2	SW 6	10	10≡	10•	3.8	✱⁰, ◍⁰ u. △⁰ n, ◍ a, ◍ ✱ p, ≡⁰ p, ◍⁰ abd.
6	67.2	72.4	79.7	-1.2	-1.0	3.9	0.8	3.4	4.0	4.5	80	65	92	WSW 5	W 7	WNW 4	10*	10	10•*	4.6	◍⁰ u. ✱⁰ n, ✱ sch. a, ◍ ✱ sch. p, abd. ⸢ p.
7	91.3	97.0	99.8	-1.2	-1.0	0.0	-2.6	4.1	4.6	3.6	95	00	95	SSW 3	W 2	S 2	10	10*	3	20.4	✱² sch. n, ✱⁰ sch. a, p. ⸝ mtg.
8	86.5	79.3	74.8	-8.3	-2.4	0.4	2.0	2.8	2.7	4.0	73	56	75	SSW 4	S 5	S 7	9	10	10	1.3	✱⁰ sch. n, a.
9	65.6	63.7	65.0	-2.6	1.9	3.1	2.4	4.4	2.9	3.2	84	51	57	S 3	ENE 1	WSW 4	10	6	8	0.4	✱⁰ u. ⸝ n, ◍⁰ sch mg.
10	80.0	79.0	73.2	-1.7	-1.5	0.1	2.2	4.0	3.4	3.7	96	73	68	SSW 4	S 3	S 5	5	9	10	7.3	✱ sch. n, a.
11	72.3	73.8	79.6	-1.6	2.9	4.8	1.4	4.3	3.0	3.8	76	46	74	S 2	S 2	S 2	10	5	0	0.3	◍⁰ sch. mg.
12	78.1	64.8	**61.1**	-2.5	-0.3	3.9	5.0	3.4	4.3	3.7	75	70	57	S 2	NE 3	SW 5	10≡	8	10		✱⁰ sch. a, ≡⁰ a, ◍⁰ u. ◍ ✱⁰ spätabd.
13	83.1	87.3	91.8	-0.6	0.6	2.2	1.9	3.4	4.2	3.3	70	79	62	S 2	N 2	S 2	10	7≡	5≡	1.8	≡⁰ p, abd.
14	93.9	96.8	98.0	0.0	5.7	**6.6**	5.1	3.9	4.0	4.0	57	56	61	SSW 4	S 5	ENE 2	10	10	10		
15	96.2	94.2	96.4	4.1	4.1	3.6	2.3	4.9	4.8	4.9	80	82	91	ENE 1	ENE 2	SSW 3	10	9	10•		◍⁰ a, abd. ≡⁰ a, p.
16	02.5	02.8	01.1	1.7	3.0	3.6	2.3	4.8	**5.3**	5.1	85	90	94	SSW 3	NNE 1	NNE 4	10	10≡	10	2.7	◍⁰ sch. n, ≡⁰ a, mtg., p.
17	97.7	97.3	97.6	2.1	3.7	4.5	3.1	4.4	4.9	4.7	73	78	83	ENE 2	NNE 3	NNE 3	10	10≡	10	0.5	◍⁰ sch. n, ≡ a, mtg., ≡⁰ p.
18	00.5	01.9	03.6	-0.1	0.0	-0.2	-1.4	4.0	4.2	3.6	87	91	85	S 2	NNE 4	NNE 4	10	10*	5		✱⁰ sch. mg., a, ✱ p, ≡⁰ mg., a, ≡ mtg.
19	07.2	09.3	10.7	-5.4	-4.2	-2.8	-3.2	2.9	3.0	2.9	86	79	78	S 2	NNE 4	NNE 2	10	10≡	10	0.9	≡⁰ p.
20	10.9	08.3	06.7	**-11.5**	-11.3	-4.2	-2.7	**1.6**	1.9	2.4	78	56	63	S 4	S 2	S 3	2	9≡	9		≡⁰ p.
21	05.8	06.6	07.2	-11.4	-3.4	-1.4	-1.2	2.9	3.4	3.5	80	81	84	S 3	S 1	W 1	9≡	10≡	10*		✱⁰ a, ✱ mtg. ✱⁰ abd. ≡⁰ a, p.
22	08.4	09.7	09.6	-3.4	-1.9	-0.2	-4.0	3.7	3.9	3.0	92	85	87	ENE 1	NE 2	S 1	10≡	10≡	9≡	6.3	✱⁰ sch. a, ≡⁰ a, p, abd.
23	11.2	11.0	11.5	-7.0	-6.8	-1.0	-2.4	2.0	3.0	2.9	71	69	75	ENE 1	S 4	S 3	4≡	0	0	0.0	≡⁰ a.
24	**12.3**	11.3	10.7	-7.0	-5.3	-1.3	-3.0	2.3	2.3	1.9	74	55	50	NE 3	SE 4	E 4	1≡	1	5		≡⁰ mg., a.
25	08.1	05.5	03.3	-6.2	-1.8	1.0	0.2	3.3	3.4	3.3	80	69	71	NNE 4	ENE 3	SSE 3	10	6	9		
26	01.8	01.1	01.0	-2.1	0.7	3.9	3.2	2.9	2.8	3.1	59	47	53	ENE 3	SE 5	SE 5	10	6	6		≡⁰ a.
27	02.3	03.0	03.2	-0.9	-0.8	-1.2	-4.8	2.5	2.0	2.3	57	47	70	SE 4	SE 4	E 5	1	2	1		
28	01.0	00.4	00.4	-5.8	-3.8	-0.5	-1.0	2.5	2.1	2.2	72	48	52	E 5	ENE 4	E 4	8	8	10		
M.	94.4	94.2	94.3	-2.7	-0.5	1.3	0.5	3.5	3.6	3.5	77	70	73	3.0	3.2	3.6	8.2	7.7	7.5	72.2	

$H = 34\,m$, $H_b = 37.0\,m$ $\varphi = 63^0\ 26'$ N

$C_g = 1.55$ mb bei 994 mb $\lambda = 10^0\ 25'$ E

März.

Datum.	Luftdruck. 900 oder 1000 + 8	2	7	Luft-Temperatur. Min.	8	2	7	Absolute Feuchtigkeit. 8	2	7	Relative Feuchtigk. 8	2	7	Richtung und Stärke des Windes. 8	2	7	Bewölkung. 8	2	7	Niederschl.	Bemerkungen.
1	04.6	08.6	11.4	-4.3	-2.4	0.7	-0.1	3.1	3.3	3.5	79	68	77	S 1	N 4	NW 4	4	5	10		≡⁰ a, p, ✱⁰ sch. p.
2	17.5	18.9	19.9	-7.3	-5.9	0.2	-0.2	2.6	3.2	3.2	87	67	71	S 5	SSW 3	SSW 4	9	10	9	0.0	⌣⁰ mg., ≡⁰ mtg.
3	22.1	20.4	17.0	-6.6	0.4	2.8	2.6	4.0	3.1	3.6	84	55	65	SW 4	SSW 4	SW 4	10	10	10		[/ a
4	10.3	11.1	10.1	0.4	2.5	-0.4	0.0	3.6	4.3	4.0	65	95	87	WNW 8	W 7	NW 8	10*	10	10*	2.2	◍⁰ n, △⁰ mg., ✱⁰ sch. a, p, ✱ sch. spätabd,
5	98.0	79.6	**76.3**	-1.0	0.3	2.5	3.5	4.3	4.7	4.0	92	84	69	SW 4	SW 4	WNW 8	10	10●	10	5.4	✱ sch. a, ◍ sch. u. ◍ ✱⁰ sch. p, ◍⁰ sch. abd.
6	79.4	82.5	81.9	0.3	2.6	2.8	0.5	3.6	3.2	4.0	65	57	84	WNW 7	NW 6	N 1	7	4	10	17.5	✱⁰ sch. u. ◍ sch. n, ✱⁰ sch. a.
7	79.6	85.2	86.8	-3.2	-2.3	-2.1	-3.2	3.6	2.9	2.3	91	73	64	NNW 3	N 6	SSE 2	10	3	1	4.5	✱ sch. früh.
8	87.3	87.6	88.7	-11.0	-9.6	-2.6	-4.0	1.5	2.6	2.5	67	68	72	SSW 5	SSW 4	SSW 4	10	10	8*		
9	96.9	01.3	05.0	-11.2	-11.0	-4.0	-5.8	1.6	2.2	2.0	79	64	67	S 2	ESE 2	ESE 2	5	1	9	0.0	
10	16.2	17.1	17.2	-11.7	-11.1	-4.9	-5.0	1.7	2.2	2.4	82	67	75	S 2	W 1	SW 2	10*	9	10*	0.0	✱⁰ sch. p, abd. ✱ sch. spätabd.
11	26.3	**29.2**	27.4	-11.3	-10.3	-5.4	-4.2	1.6	1.7	2.2	73	55	66	ENE 2	N 2	W 4	5	0	9	1.2	✱⁰ sch. spätabd.
12	26.4	22.9	21.5	-10.3	-8.0	-2.9	-4.6	2.1	3.0	2.1	84	81	63	S 3	ENE 2	NNE 3	6	3	3	1.5	✱⁰ a, mtg. ≡⁰ mtg.
13	18.6	14.7	12.2	-14.8	-14.7	-6.1	-8.0	1.2	1.7	1.5	77	58	59	S 4	ENE 1	SSW 2	3	7	9	0.0	✱⁰ sch. p.
14	11.3	10.7	11.1	-16.8	-15.8	-6.6	-10.0	**1.0**	1.4	1.2	70	48	53	S 4	ESE 2	SSE 2	6	5	9	0.0	
15	18.9	21.7	23.6	**-17.1**	-16.0	-5.7	-7.0	**1.0**	1.8	1.5	74	60	53	SSW 3	NNE 3	E 2	1	1	8		
16	21.9	17.0	12.0	-16.0	-7.0	-3.0	-2.7	1.7	2.8	3.3	62	76	88	ENE 2	ESE 2	NNE 2	10	10*	10*		✱⁰ a, mtg., ✱ p, abd.
17	18.3	20.0	19.0	-7.3	1.2	4.0	2.6	3.9	3.3	3.2	78	55	58	SSW 3	WNW 4	SSW 3	8	9	10	4.6	✱⁰ sch. n, △⁰ u. ✱⁰ mg. ✱⁰ sch. a, spätabd.
18	13.3	13.6	12.0	-0.2	3.8	**7.8**	5.3	**5.2**	5.0	5.1	87	62	76	SSW 2	SW 3	SSW 4	10	7	10●	11.9	✱⁰ sch. u. ◍ sch. n, ◍⁰ n, ◍⁰ sch. p, abd.
19	09.2	08.4	06.4	2.0	2.6	2.5	0.8	4.3	4.4	4.2	77	79	87	W 3	W 4	W 5	5	7	10*	5.6	◍ sch. n, ✱⁰ sch. u. △⁰ sch. a, ✱ sch. mtg.,
20	00.1	00.4	00.7	-1.5	-0.2	1.9	1.1	4.1	4.1	3.9	80	78	79	SSW 3	W 5	NW 5	9*	9	10*	3.2	✱⁰ sch. n, a, p, abd. [✱⁰ sch. p, abd.
21	03.8	06.5	07.8	-1.1	0.2	2.1	-0.1	4.1	3.7	4.2	88	69	91	NW 4	NW 4	W 3	10	9	10	6.6	✱ sch. n, ✱⁰ sch. a.
22	10.3	10.9	09.5	-2.4	-1.5	1.9	0.5	3.7	3.6	4.3	90	67	90	SW 3	SSW 2	WNW 2	10*	10	10	2.5	✱⁰ sch. n, mg. a, p, spätabd.
23	06.8	02.8	00.1	-5.1	-4.6	1.9	0.7	2.6	3.4	3.3	78	64	68	SE 2	SSE 2	SE 2	3	2	10	4.9	✱ sch. n.
24	97.5	99.1	01.1	-4.9	0.6	5.7	2.7	4.0	3.0	2.9	82	44	52	SSW 2	S 3	SSE 5	5	6	3		
25	07.8	10.5	12.2	-3.1	-2.0	2.4	2.9	3.1	3.4	4.0	78	61	71	S 3	NNW 1	NW 4	4	6	6		⌣⁰ mg. a.
26	15.9	16.0	15.9	-5.2	-3.7	2.5	0.1	3.0	3.3	4.5	85	60	98	SSW 3	NNE 2	S 2	6	1	2≡		⌣ mg. ≡⁰ abd.
27	12.0	09.9	09.0	-5.8	-2.3	0.7	1.0	3.0	4.5	4.6	77	92	92	ESE 2	S 2	NW 5	10	10*	10*		⌣⁰ mg ✱⁰ mtg, p, ✱⁰ sch. spätabd.
28	08.9	07.7	06.2	-4.3	-3.1	0.4	-2.1	3.0	3.8	3.0	81	80	75	SW 4	SW 3	SW 3	1	6	6	1.4	✱⁰ sch. n, a, spätabd.
29	03.4	03.2	02.4	-3.8	-2.9	3.5	0.9	2.9	2.8	3.0	79	47	61	SSW 6	W 3	SSW 3	10	10	5	0.7	✱⁰ sch. mtg.
30	91.0	87.7	85.0	-2.9	0.1	6.7	5.0	4.1	3.5	4.9	87	47	75	S 3	SSW 5	W 2	10*	10●	10≡	1.3	✱⁰ mg., a, ◍⁰ sch. p, ≡⁰ abd. [spätabd.
31	85.3	91.1	95.0	0.0	3.3	3.7	1.1	4.1	4.7	4.3	71	78	87	SSW 4	WNW 6	SSW 4	7	9	3	1.4	◍⁰ n, ◍⁰, ✱⁰ u. △⁰ sch. a, ✱⁰ sch. p, △⁰ sch.
M.	07.1	07.0	06.6	-6.0	-3.8	0.4	-0.8	3.0	3.2	3.3	79	66	73	3.4	3.3	3.4	7.2	6.7	8.1	76.4	

April.

Datum.	Luftdruck. 900 oder 1000 + 8	2	7	Luft-Temperatur. Min.	8	2	7	Absolute Feuchtigkeit. 8	2	7	Relative Feuchtigk. 8	2	7	Richtung und Stärke des Windes. 8	2	7	Bewölkung. 8	2	7	Niederschl.	Bemerkungen.
1	99.0	97.3	97.9	-2.3	-0.9	3.6	1.1	3.6	2.7	3.8	84	46	75	S 4	NNW 4	SSW 2	7	7	10	7.0	✱ sch. n, ✱⁰ sch. p.
2	91.5	86.3	85.0	**-4.1**	0.1	3.7	5.4	3.4	**2.5**	3.1	73	42	46	SSE 6	SE 9	S 7	10	9	7	0.0	/ böen mtg., p.
3	89.0	88.5	94.4	-1.3	-0.4	0.0	1.4	3.4	4.4	3.8	76	96	74	SSW 3	SSW 6	W 6	2	10	10		✱² mtg., ✱⁰ sch. p.
4	02.8	08.6	08.6	-1.8	1.0	4.8	3.7	4.1	3.2	3.0	83	50	49	W 7	W 3	E 3	10	9	10	2.4	✱⁰ sch. n, a.
5	09.2	10.8	12.2	0.2	2.5	6.4	4.6	3.3	3.3	4.0	60	45	64	W 1	NNW 3	W 1	8	7	7	0.0	
6	12.8	12.1	12.2	1.1	3.0	7.8	6.5	3.6	4.9	4.8	62	61	67	ESE 1	NNW 2	ESE 1	8	9	10≡		≡⁰ p, abd.
7	14.2	14.8	14.4	2.9	4.2	9.0	8.3	3.6	4.3	4.4	58	51	55	WNW 1	NNW 1	SSW 1	10≡	6	6		≡⁰ a.
8	15.6	14.8	14.3	1.4	3.8	8.8	7.9	3.1	3.6	5.0	51	44	63	ESE 2	N 2	SSW 1	0	0	1		
9	15.9	15.2	14.9	0.4	2.8	8.5	7.7	3.5	3.7	4.7	62	46	60	NE 1	NNW 2	WNW 3	1	1	2		⌣⁰ mg.
10	19.3	20.2	20.1	0.4	3.0	8.3	8.5	4.3	4.9	4.5	76	60	55	WNW 1	NNW 3	WNW 1	0	0	0		⌣⁰ mg.
11	**23.1**	22.6	21.6	1.2	3.2	7.8	6.9	3.8	4.9	4.9	66	61	66	S 3	N 2	ENE 1	0	0	0≡		≡⁰ abd.
12	19.2	16.8	14.7	0.9	2.1	6.8	6.1	3.9	5.5	5.0	73	74	72	SE 1	N 2	SSE 2	10	10	10≡		≡⁰ abd.
13	10.6	07.8	04.8	0.2	2.8	7.6	8.1	4.5	5.2	5.7	79	67	71	NW 1	N 3	WNW 0	10	1	1		⌣⁰ mg.
14	02.4	01.7	01.0	2.6	7.6	10.5	8.8	4.4	4.5	4.1	57	47	49	S 7	S 6	S 5	1	1	1		
15	97.3	93.4	88.8	5.2	6.3	8.6	7.0	4.1	4.4	4.4	58	52	59	E 5	E 6	ESE 6	10	10	8		
16	**82.6**	82.9	85.1	5.1	6.7	10.2	6.6	4.4	3.9	4.8	60	43	67	ESE 3	S 6	SSE 3	9	8	10●		◍ sch. △ u. ✱⁰ p, ◍⁰ sch. p, abd.
17	90.2	92.9	93.5	3.6	4.7	6.8	4.8	4.8	4.5	4.5	74	61	70	SSW 5	WNW 8	SW 1	10●	9	9	1.4	◍⁰ sch. früh, a, p.
18	96.3	98.2	98.9	2.0	5.1	7.4	4.5	4.2	4.2	5.0	64	55	79	W 3	W 5	SW 3	9	9	10●	0.6	◍⁰ sch. früh, a, p.
19	03.9	07.4	09.3	3.0	5.7	6.5	4.1	5.2	5.1	4.6	76	71	76	WNW 3	N 4	NW 4	10	10●	10●	1.1	◍⁰ sch. n, a, p, abd.
20	10.5	09.0	09.2	2.0	2.6	5.4	4.7	5.0	**5.9**	5.6	91	87	87	SSW 3	SSW 3	W 2	10●	10	10●	5.0	◍⁰ n, ◍⁰ sch. a, p, ≡⁰ mg., a.
21	13.6	15.5	14.2	1.7	4.2	5.0	4.5	4.4	4.3	4.4	71	66	70	W 3	NW 5	N 2	9●	10	10	6.0	◍⁰ sch. n, a.
22	05.4	00.2	01.3	-0.7	2.1	9.5	7.2	3.8	3.1	5.4	71	35	72	NE 2	SW 3	NE 1	7≡	10	9	0.3	≡⁰ mg., a.
23	86.6	85.8	90.8	1.8	7.5	**11.7**	4.2	4.4	4.8	5.6	58	46	90	SSW 7	S 6	NE 1	10	6	10●		◍⁰ sch. a, ◍ p, ◍ sch. abd.
24	93.6	92.2	93.1	1.9	4.3	9.0	7.7	5.0	3.6	3.9	80	44	50	ESE 1	NNE 3	W 2	1	1	7	4.2	◍ früh.
25	94.4	94.0	95.9	0.9	4.5	9.1	8.0	3.8	4.3	4.8	60	50	60	NE 2	NNE 5	W 2	2	5	8		
26	00.9	03.1	04.4	2.4	4.9	9.0	7.7	4.9	3.4	4.2	75	40	55	SSW 2	WNW 6	WNW 6	6	6	2		
27	08.5	09.1	09.3	1.9	4.4	6.8	6.2	4.5	4.2	3.7	71	57	52	NW 3	N 2	NNW 6	8	6	4	1.9	◍ sch. n, a, mtg.
28	08.6	08.3	08.6	-0.4	2.9	6.6	6.3	3.9	3.7	3.4	69	51	48	SE 1	NNE 6	NNE 5	9	3	7	0.7	
29	13.5	14.2	13.4	0.4	3.1	6.9	7.5	3.9	3.8	3.4	68	51	44	NE 3	NNW 3	N 3	10	9	2		
30	11.0	08.2	07.6	-0.2	3.7	8.6	4.8	4.2	2.7	3.2	70	33	50	N 1	ENE 6	E 3	4	6	10		✱⁰ sch. abd.
M.	04.7	04.4	04.6	1.1	3.6	7.4	6.0	4.1	4.1	4.4	69	54	63	2.9	4.2	2.8	6.7	6.3	6.7	30.6	

$H = 34\,m$, $H_b = 37.0\,m$ — $\varphi = 63^0\ 26'$ N

$C_g = 1.55\,mb$ bei $994\,mb$ — $\lambda = 10^0\ 25'$ E

Mai.

Datum.	Luftdruck. 900 oder 1000 + 8	2	7	Luft-Temperatur. Min.	8	2	7	Absolute Feuchtigkeit. 8	2	7	Relative Feuchtigk 8	2	7	Richtung und Stärke des Windes. 8	2	7	Bewölkung. 8	2	7	Niederschl.	Bemerkungen.
1	05.2	05.6	07.2	0.1	1.7	3.3	3.0	3.7	3.6	4.1	71	61	73	NNE 5	NW 3	SSW 2	10*	10	10	0.0	✱⁰ sch. u. ●⁰ sch. p.
2	10.7	11.5	10.5	**0.0**	3.5	8.4	8.1	3.5	**3.3**	3.6	60	39	46	SSE 5	N 4	NNE 4	2	7	10	0.2	
3	05.4	03.2	05.4	3.4	3.6	4.8	4.8	5.3	5.7	5.3	90	89	82	NE 3	W 1	W 3	10●	10●	10	0.6	●⁰ früh, ● sch. a, ●⁰ sch. p.
4	12.6	15.1	15.8	2.2	4.3	7.4	7.7	5.1	4.3	4.6	82	57	59	WNW 2	NW 3	NE 2	10●	10	2	3.6	●⁰ sch. mg., a.
5	16.3	15.8	15.8	0.5	4.9	10.5	8.8	4.3	4.5	4.7	65	47	55	NNE 1	NNE 3	ENE 3	6	9	9	0.3	
6	16.4	14.6	12.8	4.1	7.0	11.9	13.8	5.2	5.4	6.6	70	52	57	N 3	N 3	NW 2	3	0	0		
7	12.4	10.9	08.1	4.4	9.0	14.0	12.0	5.6	4.5	5.2	66	38	49	N 2	SE 6	SSE 6	0	1	1		
8	07.3	08.1	06.2	8.8	10.8	10.9	11.1	4.8	5.8	5.8	50	60	59	S 5	S 4	S 3	8	10●	9		●⁰ sch. p.
9	07.5	07.1	05.7	5.0	8.2	13.0	15.0	6.4	6.2	6.3	79	55	50	N 3	NW 2	ESE 2	7	2	9	0.2	
10	05.8	07.9	09.8	6.6	9.2	12.3	11.3	6.9	6.7	7.3	80	63	73	N 1	NW 7	NW 4	6	9	9		●⁰ sch. p, ≡⁰ a.
11	10.9	07.2	04.5	4.7	8.4	17.4	14.1	6.5	4.5	5.4	79	30	46	NNW 1	S 4	SSE 3	10	1	8	0.0	≡⁰ a.
12	02.4	04.5	08.0	7.7	9.1	13.6	11.3	6.5	6.6	6.8	75	57	68	S 2	NNW 4	NNW 2	10	9	7	1.0	●⁰ sch. früh, a, p.
13	08.7	08.1	11.5	6.9	9.9	11.2	10.1	6.6	6.4	6.6	73	65	72	N 2	NW 7	W 3	10	10	10	0.1	●⁰ sch. n, a, p, spätabd.
14	16.2	17.8	18.8	6.1	7.7	8.8	9.4	5.9	6.3	5.6	75	74	63	S 4	NW 6	W 2	10	10	9	1.9	●⁰ sch. a, p.
15	**20.5**	18.4	16.2	4.8	9.0	12.7	13.4	5.5	5.3	5.2	65	48	46	S 2	ESE 3	NNW 3	6	1	1	0.1	●⁰ sch. früh.
16	14.4	12.8	12.4	4.2	8.9	14.0	15.7	5.8	6.7	6.5	67	57	49	NNW 2	N 3	S 1	2	3	9		
17	12.6	12.3	12.5	7.0	12.1	18.6	**19.9**	6.4	8.0	8.7	61	51	50	N 1	NW 2	N 1	7	6	9		
18	19.2	18.3	17.5	10.4	12.5	18.8	19.1	7.9	7.9	7.8	73	49	47	N 2	NW 2	NW 5	5	3	3		
19	19.9	18.9	18.0	9.3	14.4	18.5	17.8	8.5	6.5	5.9	70	42	39	NE 3	WNW 6	WNW 3	4	2	6		
20	15.5	13.5	11.8	9.5	10.0	10.2	7.9	7.6	6.1	5.7	83	66	72	NW 4	WNW 4	WNW 5	10	9	10	0.1	●⁰ sch. früh, ●⁰ u. ≡⁰ a, ●⁰ sch. p, spätabd.
21	10.9	09.8	08.4	3.9	5.8	7.6	6.3	4.6	4.5	4.1	67	58	58	WNW 6	NW 5	NW 5	9	10	9	1.2	●⁰ sch. a.
22	03.7	02.8	03.3	2.9	4.4	5.4	4.5	5.0	5.1	5.5	80	77	87	SSW 4	NW 5	NNE 3	10	10	10●	0.3	●⁰ sch. früh, a, p, abd.
23	06.3	05.8	05.5	1.7	6.6	9.4	9.3	4.7	4.6	4.8	65	52	55	NNE 2	NNE 6	NE 3	7	3	7	7.1	● sch. n.
24	07.9	07.3	07.0	3.1	8.8	11.2	11.6	5.0	4.7	4.9	59	48	48	S 2	NNE 4	NNE 3	4	7	2		
25	07.5	06.1	05.9	4.3	9.4	13.3	13.0	5.3	5.1	6.5	60	44	58	NE 3	NNE 5	NNE 4	7	6	9		
26	07.0	05.0	03.4	5.8	10.8	14.0	14.5	6.7	6.0	7.2	70	51	58	N 3	N 4	ESE 3	3	6	10		
27	00.8	99.3	98.1	9.8	14.6	17.0	16.8	6.4	6.2	5.5	52	43	39	SSW 3	SSE 6	S 7	1	7	3		
28	94.9	94.9	96.7	12.3	13.8	17.2	14.6	7.4	7.8	7.2	62	54	58	S 4	S 6	SE 6	10	10●	10	0.2	●⁰ sch. früh, a.
29	99.6	99.3	96.7	13.7	15.4	17.5	18.3	7.6	8.6	**9.1**	59	58	59	SSE 6	SSE 3	SSE 3	9	10	10	0.0	●⁰ sch. früh, ● sch. spätabd.
30	96.0	94.8	**93.1**	10.6	15.8	14.5	14.8	6.9	5.8	6.6	52	48	53	S 5	SE 6	S 5	1	10	7	2.7	
31	94.1	93.9	97.6	9.6	15.0	16.4	12.9	6.6	5.8	6.2	52	42	56	NW 2	ENE 3	NW 4	3	9●	6		●⁰ sch. p.
M.	08.7	08.1	07.9	5.9	9.2	12.4	12.0	5.9	5.8	6.0	68	54	58	3.0	4.2	3.4	6.5	6.8	7.2	19.6	

Juni.

Datum.	Luftdruck. 900 oder 1000 + 8	2	7	Luft-Temperatur. Min.	8	2	7	Absolute Feuchtigkeit. 8	2	7	Relative Feuchtigk 8	2	7	Richtung und Stärke des Windes. 8	2	7	Bewölkung. 8	2	7	Niederschl.	Bemerkungen.
1	05.1	06.6	08.4	6.3	10.3	14.8	10.4	7.5	6.9	8.2	79	55	88	S 3	NE 3	SW 2	10	7	10●	5.7	● sch. n, ●⁰ sch. a, ● sch. p, spätabd.
2	08.5	08.0	08.1	6.9	9.7	14.4	12.6	7.5	7.1	7.2	84	58	67	SSW 2	NNW 3	ENE 1	10	8	9	2.8	●⁰ sch. spätabd.
3	09.6	10.4	11.9	7.3	9.0	11.6	11.1	7.5	7.0	6.6	88	69	67	N 1	N 3	NW 4	10	8	4	4.5	● n, ●⁰ sch. p.
4	17.7	19.0	19.3	7.1	10.2	13.3	14.9	6.8	6.0	6.2	73	52	50	NW 5	NW 5	NW 3	10●	4	1	2.3	● sch. früh, ●⁰ sch. a.
5	19.5	18.5	17.8	5.8	9.0	14.2	13.8	6.6	8.0	8.7	77	66	74	WSW 1	NE 2	WNW 1	10	10	10●	0.0	●⁰ sch. früh, ●⁰ p, abd.
6	17.1	15.5	13.1	8.5	14.3	16.5	20.7	9.2	9.0	**10.5**	76	65	58	NW 2	NNW 1	NNW 1	9	10	8	0.0	
7	21.3	23.2	23.3	10.7	11.4	13.3	14.3	7.0	7.8	7.3	70	68	60	NW 4	NW 5	N 3	7	7	8	3.6	● sch. n.
8	25.0	**25.6**	25.3	8.2	11.1	13.4	14.8	8.5	8.8	9.7	86	77	77	S 1	NNE 1	S 0	10●	10	10	0.0	●⁰ sch. mg., a, p.
9	24.5	24.3	24.3	11.1	15.2	17.4	18.9	8.9	10.3	**5.0**	69	69	31	WNW 1	N 2	NW 4	9	9	4	0.3	
10	22.9	20.3	19.8	12.0	15.6	**23.7**	20.8	8.8	9.3	7.1	66	42	39	N 1	NW 3	WNW 6	2	2	4		
11	17.5	15.5	13.0	13.1	14.2	15.0	12.3	9.4	5.8	6.7	78	46	63	NNE 3	WNW 5	W 4	10●	10	10	0.0	●⁰ sch. n, mg., spätabd.
12	08.7	07.6	05.8	7.6	9.0	9.1	10.6	7.1	7.3	6.2	83	86	65	W 3	WNW 5	WNW 7	9	10	8●	1.9	●⁰ sch. früh, a, p.
13	98.8	91.6	**89.4**	7.6	9.4	11.4	8.7	8.1	9.3	7.6	92	93	91	SSW 3	WNW 2	WNW 6	10	10●	9●	3.4	●⁰ sch. früh, a, ● sch. p, abd.
14	91.2	95.9	99.1	6.1	8.1	7.9	8.2	6.3	6.4	5.8	78	81	71	NW 8	NW 9	NW 9	10●	10●	9●	12.9	● sch. n, ●⁰ sch. a, p.
15	03.8	00.8	98.8	5.9	7.5	10.5	8.2	6.4	6.7	7.6	83	71	93	WNW 3	NNE 1	NW 0	9●	10●	10●	4.9	●⁰ sch. n, a, ●⁰ p.
16	96.2	91.5	89.7	7.4	8.9	10.2	8.2	8.0	8.6	7.4	95	93	92	E 1	NE 3	SW 5	10●	10●	10●	6.3	●⁰ sch. n, a, ● p.
17	92.4	91.8	91.1	5.6	5.6	8.5	7.8	5.5	6.0	6.0	82	73	76	WNW 4	NW 8	NW 7	10	10	10	13.5	● sch. n, ●⁰ sch. a, p.
18	94.1	97.5	01.4	**5.4**	7.5	11.7	9.8	7.1	8.4	8.1	91	83	89	SSW 4	WNW 6	WNW 5	10●	10	10	4.1	● sch. n, ●⁰ sch. a.
19	07.6	07.5	06.6	7.3	8.4	9.9	9.3	7.1	6.9	6.1	87	75	70	NW 4	NNW 5	NW 4	10	10	10	0.3	●⁰ sch. n.
20	02.8	01.4	99.2	6.7	9.3	11.8	14.8	6.2	6.0	6.6	71	58	53	NE 2	NNW 4	NNW 3	10	4	9		●² sch. spätabd.
21	02.8	04.4	05.5	8.8	13.6	19.5	19.2	9.2	8.0	7.4	80	48	45	NNW 2	NNE 5	ENE 4	9	4	9	1.0	
22	10.5	11.7	13.0	10.9	13.4	14.6	12.5	8.5	8.8	8.1	75	71	76	NW 4	NW 6	NW 5	2	3	2		
23	16.3	16.2	16.1	8.0	9.3	11.6	12.2	7.6	7.7	7.4	88	76	70	NW 4	WNW 4	NW 6	10	10	7		
24	16.2	13.8	11.9	9.1	12.0	13.4	12.2	7.8	6.3	6.4	75	55	61	NW 2	NW 6	WNW 6	9	6	1		
25	06.9	04.7	03.8	7.7	8.1	10.8	8.4	6.1	6.0	6.3	75	62	77	NW 5	WNW 7	W 6	10	9	9	0.4	●⁰ sch. n, p, spätabd.
26	03.2	04.1	05.3	6.6	8.9	11.7	10.2	7.1	6.8	8.1	84	67	87	SSW 1	WNW 4	SW 2	9	10	10	1.9	●⁰ sch. n, a, p.
27	09.4	11.4	12.0	8.0	9.5	11.8	10.6	7.3	7.1	6.8	83	69	72	NW 5	NW 5	NW 5	10	9	10	0.7	●⁰ sch. n, a.
28	12.0	12.8	14.2	6.4	11.8	15.0	13.5	7.8	7.6	7.0	76	60	61	N 4	NW 5	NW 4	3	3	2	0.0	
29	16.7	16.6	16.2	8.2	11.4	16.6	18.2	7.6	8.6	9.1	76	61	58	NE 2	N 3	N 1	10	1	3		
30	16.8	16.8	17.3	9.6	15.3	20.6	20.1	9.6	8.7	9.2	74	48	53	NW 3	NNW 3	NW 5	2	2	1		
M.	09.8	09.5	09.4	8.0	10.6	13.5	12.9	7.6	7.6	7.4	80	67	68	2.9	4.1	4.0	8.6	7.5	7.2	70.5	

H = 34 m, H_b = 37.0 m $\varphi = 63^0\ 26'$ N

C_g = 1.55 mb bei 994 mb $\lambda = 10^0\ 25'$ E

Juli.

Datum.	Luftdruck. 900 oder 1000 + 8	2	7	Luft-Temperatur. Min.	8	2	7	Absolute Feuchtigkeit. 8	2	7	Relative Feuchtigk. 8	2	7	Richtung und Stärke des Windes. 8	2	7	Bewölkung. 8	2	7	Niederschl.	Bemerkungen.
1	17.3	14.9	17.2	12.4	15.7	23.4	21.0	10.1	12.7	10.3	76	59	56	NNW 2	NW 2	NW 5	5	1	3		
2	19.4	17.1	15.3	14.0	10.9	24.6	25.3	11.4	11.6	**6.4**	80	50	27	NW 2	NE 3	E 4	7	2	1		
3	16.1	14.0	12.1	14.5	19.8	24.7	25.2	9.9	6.8	9.7	57	30	41	ENE 3	NNE 3	ESE 3	1	0	7		
4	12.1	08.9	08.3	18.2	21.9	24.9	23.4	11.1	11.4	10.8	57	49	51	ENE 3	NNE 5	S 6	1	4	9		ꓘ^0 W 6^{20} p, ●^{0} sch. spätabd.
5	08.6	07.8	07.6	17.9	21.6	22.9	20.3	12.5	12.4	11.2	66	60	63	NW 4	NW 3	NW 5	7	9	8	0.0	
6	07.3	05.0	02.9	14.1	15.4	17.7	16.5	10.8	11.5	12.9	83	76	93	SSE 3	NNW 4	ENE 1	10	10	10		●^{0} sch. a, p, spätabd.
7	05.4	05.8	05.5	15.0	16.4	18.6	15.7	10.6	10.9	11.0	76	69	83	NW 5	N 4	WNW 4	7	9	10	0.8	●^{2} sch. u. ꓘ^2 p, ● sch. abd.
8	01.1	04.0	07.3	13.6	16.5	15.3	12.9	12.1	9.8	8.5	86	70	77	ENE 3	WNW 6	WNW 2	9	10●	10	11.3	●^{0} sch. p, abd.
9	06.9	06.2	05.6	10.6	12.4	12.6	13.4	8.9	8.2	7.2	85	76	63	NW 4	WNW 4	NW 3	10●	10●	10	0.4	●^{0} mg. ● sch. a.
10	03.6	02.5	03.6	10.8	10.8	11.3	9.3	8.2	8.3	8.4	85	83	96	WNW 5	WNW 5	S 1	10●	10●	10●	3.0	●^{0} sch. früh, ● sch. mg., ●^{0} sch. a, ● p, abd.
11	06.9	09.5	12.2	**8.7**	10.8	14.4	13.0	8.2	7.9	8.7	85	64	78	SSW 2	NW 4	W 2	10	10	10	20.6	● n, ●^{0} sch. a, p.
12	15.9	16.9	17.8	10.6	11.8	14.6	13.9	8.2	9.7	10.2	80	78	86	SSW 3	NNW 3	SSW 0	10	10	10	1.0	●^{0} sch. mg. a.
13	22.6	**23.7**	22.7	11.4	13.2	15.8	16.8	9.0	8.4	9.5	80	63	67	S 1	NNW 2	N 3	9	9	3	2.5	● sch. früh.
14	19.4	17.2	15.1	10.3	15.0	18.9	20.6	9.2	11.2	12.4	72	69	69	N 3	NNW 2	NW 0	7	5	5		●^{0} sch. p.
15	13.4	11.9	13.0	13.1	18.6	22.7	16.8	11.5	11.9	10.2	72	58	72	N 1	NNW 3	NW 7	1	10	10	0.2	⌓^{0} mg., ●^{0} sch. abd.
16	12.8	11.9	10.1	13.1	15.8	19.3	19.8	11.9	12.6	13.3	89	75	78	NNW 1	N 3	NW 2	10	9	4	0.4	●^{0} sch. a.
17	08.0	08.3	09.2	14.2	18.4	18.9	18.0	11.9	11.0	10.6	76	68	69	WNW 3	NW 6	SW 2	5	3	10	0.0	
18	07.3	07.2	08.1	13.0	18.2	23.7	23.0	11.6	11.4	10.8	75	52	52	NE 3	NNW 1	SW 1	8	10	9		
19	11.6	11.8	12.2	14.7	18.9	24.2	25.1	12.4	12.2	12.4	76	54	53	N 2	N 2	WNW 3	6	4	7		
20	16.6	17.1	17.4	16.0	19.8	25.2	25.5	13.3	14.9	**15.0**	78	63	62	N 2	WNW 1	NNW 1	8	4	8		
21	19.5	17.8	18.0	16.7	20.8	26.2	24.4	13.6	14.3	13.8	75	57	61	ENE 1	N 2	SW 4	8	6	10●		●^{0} sch. p, abd. ꓘ^0 p.
22	19.0	17.4	17.7	17.1	22.2	25.7	22.0	14.4	13.1	12.1	72	53	62	NE 2	NW 4	NW 4	3	2	9	0.0	
23	13.6	14.5	15.2	16.8	19.0	22.0	18.9	13.5	12.1	13.1	83	62	81	N 0	NNW 5	NNW 2	10	10	10		●^{0} sch. p.
24	15.6	16.9	16.9	14.8	14.8	16.2	17.7	10.7	10.0	8.4	86	73	56	WNW 5	NW 5	NW 5	10	9	3	0.5	
25	13.8	09.4	07.0	10.6	14.6	22.9	22.4	8.1	11.6	13.1	65	56	65	ENE 2	NNE 3	SSW 2	7	5	8		
26	05.8	03.3	01.1	14.3	20.7	**28.3**	27.4	14.4	10.5	10.2	79	37	37	NNE 2	S 6	S 5	7	8	7		
27	99.0	97.4	97.9	20.1	21.2	23.8	22.0	11.8	13.1	12.4	64	60	64	SSE 3	SSW 2	NNW 5	10●	9	8		●^{0} sch. a.
28	95.8	95.2	94.6	16.5	17.7	21.7	18.7	13.5	13.7	12.6	90	71	79	SSW 2	NW 4	NW 5	10	8	9●	0.8	●^{0} sch. früh, a, abd.
29	95.4	95.7	95.2	15.7	17.2	18.4	18.0	12.5	11.6	10.9	86	74	71	NNW 2	WNW 5	NW 6	10	10	4	0.0	●^{2} sch. u. ꓘ^2 spätabd.
30	95.1	95.0	94.8	12.3	15.5	14.4	16.7	11.1	11.0	10.0	85	91	70	SSE 1	S 1	NW 2	10	10●	8	9.8	●^{0} sch. früh, mtg. p, ꓘ mtg.
31	95.1	**93.8**	**93.8**	10.0	14.0	19.9	14.5	10.3	10.7	11.1	87	62	91	W 1	NW 4	SW 1	10	9	10●	1.8	●^{0} sch. früh, ● sch. u. ꓘ p, ●^{2} sch. abd.
M.	09.7	09.0	08.9	13.9	17.0	20.4	19.3	11.2	11.2	10.9	78	63	67	2.5	3.5	3.1	7.6	7.3	7.7	53.1	

August.

Datum.	Luftdruck 8	2	7	Min.	8	2	7	Abs. F. 8	2	7	Rel. F. 8	2	7	Wind 8	2	7	Bew. 8	2	7	Niederschl.	Bemerkungen.
1	92.9	93.1	93.1	12.5	14.2	15.9	17.4	10.4	10.6	10.1	87	79	68	SSW 2	NW 4	WNW 6	10	8	9	10.0	●^{0} sch. früh, ● sch. a.
2	94.2	94.4	95.2	12.8	15.4	19.0	17.3	10.8	10.7	10.2	83	65	69	NW 3	N 3	NE 1	9	7	9	3.3	● sch. früh.
3	98.2	99.3	99.7	13.9	15.1	16.8	18.5	11.5	11.9	11.7	90	83	74	SSW 1	SW 2	WNW 3	10●	9●	7	0.4	●^{0} sch. mg. ● sch. u. ꓘ p.
4	01.1	00.7	00.0	14.3	15.7	16.4	15.9	10.5	10.2	10.1	79	73	75	NW 1	WNW 4	WNW 4	9	9	8	1.7	●^{0} sch. n, mtg.
5	99.4	98.1	98.1	11.9	15.3	18.6	18.1	10.4	9.9	10.7	81	62	69	N 1	NNW 2	NNW 4	6	4	6	0.2	●^{0} sch. n.
6	00.7	02.3	03.7	12.9	14.4	16.5	16.3	10.3	9.3	10.0	85	67	72	E 1	WNW 5	WNW 4	9	9	7		
7	06.5	07.6	08.6	12.1	14.2	18.4	19.0	9.5	10.8	10.9	79	68	67	S 2	N 3	NW 2	10	5	3		
8	11.5	10.3	09.8	12.5	17.0	19.5	19.1	10.8	12.1	10.8	75	72	65	NNW 1	NW 4	SSW 3	5	2	9		●^{0} sch. abd.
9	10.4	10.3	07.6	13.7	16.5	18.8	18.8	11.9	11.0	10.2	85	68	63	S 1	NW 3	NNE 2	10	8	8	1.9	●^{0} sch. a.
10	03.1	00.5	01.7	15.3	18.1	21.2	17.0	10.8	11.4	10.8	70	62	75	ENE 1	S 0	NW 6	9●	10●	3	0.4	●^{0} sch. früh, a, ●^{2} u. ꓘ p.
11	98.6	97.9	98.0	12.7	15.3	19.2	17.7	10.4	10.6	10.8	81	63	71	NE 2	NNW 3	NNE 1	10	8	6	9.5	● sch. abd. ꓘ abd.
12	08.7	11.7	11.0	11.8	12.7	16.8	15.6	9.5	7.9	7.9	88	56	60	NW 4	NNW 4	NE 3	10	5	10	2.8	●^{0} sch. n, a.
13	07.8	06.6	05.7	12.1	15.2	18.4	16.7	10.0	11.9	12.2	77	76	86	S 2	ESE 1	ESE 1	10●	10	9	0.6	●^{0} sch. mg. p.
14	08.9	08.8	08.4	10.3	10.6	15.0	11.1	8.3	6.9	6.7	88	54	68	WSW 2	W 6	WSW 5	9	8	10●	5.8	● sch. n, ●^{0} sch. a, abd.
15	08.3	08.8	10.8	9.5	11.2	11.0	10.0	7.8	8.9	8.3	79	91	91	WNW 4	W 6	NW 7	10●	10●	10●	34.3	●^{2} n, ● a, ● sch. p. ●^{0} sch. abd.
16	11.5	10.5	08.6	9.1	10.1	12.8	12.4	6.8	7.1	6.9	74	65	64	SW 2	WNW 4	WNW 5	10	9	4	15.7	
17	05.7	04.2	03.3	**6.2**	9.2	11.8	11.7	7.3	8.4	9.4	84	83	93	S 2	SSW 1	WNW 4	10	10●	10●	0.0	●^{0} sch. mg., a, ● p, abd.
18	00.1	00.6	01.3	8.8	12.2	12.7	12.3	9.7	9.4	9.4	93	87	89	WNW 6	NW 6	NW 7	10●	10●	10	27.3	●^{2} sch. n, ●^{0} sch. a, p.
19	03.7	04.5	04.9	11.0	12.6	14.3	12.1	9.7	9.4	9.8	90	78	94	SSW 2	NW 4	WNW 1	9	10	10●	8.2	● n, ●^{0} sch. p, ● sch. spätabd.
20	04.2	04.2	03.8	11.2	11.8	13.3	13.4	9.8	10.6	10.8	96	94	95	SSW 3	NE 1	SSW 1	10●	10●	10	5.3	● n, ●^{0} a, ●^{0} sch. p.
21	02.7	02.5	03.4	11.5	12.7	16.4	16.9	9.9	11.7	**12.3**	91	84	86	NNE 1	N 1	ESE 0	9	10	10	1.9	⌓ mg., ●^{0} sch. mtg.
22	07.8	09.1	09.0	11.5	13.6	17.0	17.5	10.5	10.1	11.9	92	70	80	NW 0	W 2	NE 2	7	9●	6	0.2	●^{0} sch. n, ⌓ mg., ● sch. u. ꓘ p.
23	11.1	10.6	10.1	12.6	15.7	**21.9**	20.3	10.5	11.0	10.9	79	56	62	NE 1	SW 2	S 3	5	5	3	0.9	⌓^{0} mg.
24	10.7	09.6	09.8	12.9	17.1	21.4	18.7	8.1	7.7	7.0	56	40	44	S 6	S 5	SSE 6	3	3	4		
25	09.3	08.9	09.4	12.2	17.6	21.8	19.7	8.5	6.9	7.6	57	36	45	S 4	S 6	S 6	2	1	1		⌓^{0} mg.
26	**12.2**	11.0	10.2	11.7	16.1	21.5	19.6	9.4	8.0	6.9	69	42	41	NE 1	S 5	S 6	0	1	1		⌓^{0} mg.
27	11.3	08.8	01.4	12.1	15.0	20.2	17.8	8.4	6.5	**6.3**	66	37	42	SW 1	S 5	SSE 5	9	6	10		
28	04.6	06.4	06.9	14.1	14.5	14.9	13.3	8.9	10.0	10.6	73	80	94	SSE 1	NNE 2	SW 2	10	10●	10	0.0	●^{0} sch. früh, mg., a, ● p.
29	94.6	92.8	**91.8**	10.3	13.7	15.7	13.2	7.3	9.4	9.0	62	70	80	SSW 3	NW 5	NW 7	10	9	10	1.8	●^{0} sch. mg. a, ● sch. u. ꓘ p, ●^{0} sch. spätabd.
30	96.1	00.1	03.8	9.1	11.3	11.8	10.1	9.1	8.9	7.8	92	87	84	SSW 3	WSW 3	W 6	7	10●	10●	4.6	●^{0} sch. n, mg., ● sch. a, p, spätabd.
31	01.2	94.5	93.8	9.3	10.0	10.5	9.4	7.1	8.0	8.1	79	85	92	SSW 4	SSW 2	SW 2	10	10	9	12.9	● a, ●^{0} sch. p.
M.	04.4	04.2	04.2	11.7	14.0	16.8	15.7	9.5	9.6	9.6	80	69	73	2.2	3.4	3.7	8.3	7.6	7.5	149.7	

Trondhjem. 1925.

$H = 34\,m$, $H_b = 37.0\,m$ — $\varphi = 63^0\ 26'$ N

$C_g = 1.55$ mb bei 994 mb — $\lambda = 10^0\ 25'$ E

September.

Datum.	Luftdruck. 900 oder 1000 + 8	2	7	Luft-Temperatur. Min.	8	2	7	Absolute Feuchtigkeit. 8	2	7	Relative Feuchtigk. 8	2	7	Richtung und Stärke des Windes. 8	2	7	Bewölkung. 8	2	7	Niederschl.	Bemerkungen.
1	84.9	84.4	83.7	7.4	8.8	9.3	9.2	7.0	6.4	6.4	83	74	74	S 3	S 2	SW 4	10	9	6	5.7	◉⁰ sch. mg., a, p.
2	**78.4**	79.3	81.8	7.0	8.5	10.1	9.4	6.3	6.8	7.7	76	74	88	S 4	S 3	NW 4	9•	9•	9•	3.0	◉⁰ sch. n, a, p.
3	82.5	82.8	82.4	7.8	9.1	10.9	9.1	7.7	8.1	7.5	91	84	88	SSW 3	W 3	WSW 3	10•	10	10•	15.1	◉ n, ◉ sch. a, p, abd.
4	79.5	81.0	81.9	6.8	7.7	9.1	8.4	6.5	6.5	7.3	83	75	89	W 3	SW 5	SSW 3	10	10	10•	32.6	◉² n, ◉⁰ sch. a, p, ◉ abd.
5	87.7	89.5	90.1	7.1	8.0	11.9	11.6	7.7	7.4	8.2	96	72	80	NW 0	WNW 4	WNW 4	6	8	10	13.5	◉² früh, ◉⁰ sch. p, abd.
6	88.5	90.5	92.1	7.7	9.5	12.7	11.0	8.1	8.0	8.4	91	74	86	SSW 4	S 3	S 2	10•	9	8	11.1	◉² n, ◉⁰ sch. a.
7	96.7	98.5	99.1	8.7	10.0	13.6	12.8	8.1	7.7	8.2	88	67	75	S 2	N 3	W 3	9	3	3	0.1	◉⁰ sch. früh.
8	01.3	01.4	01.6	9.1	10.4	14.1	11.5	8.0	7.5	8.3	85	63	82	SSW 3	NNW 3	N 2	7	3	3		⌓ abd.
9	03.4	03.8	03.9	6.6	7.9	15.4	12.3	7.3	8.8	8.9	92	67	85	S 1	NNE 3	S 1	9	6	3		⌓ mg, ⌓⁰ abd.
10	06.4	06.8	07.0	5.7	8.1	13.6	11.8	6.8	8.0	7.4	85	69	72	W 1	NNW 3	SSE 1	8	6	7		⌓ mg.
11	10.8	11.4	11.6	6.5	8.7	14.0	11.8	7.0	7.2	7.8	84	61	76	NW 1	NE 4	E 1	5	1	0		⌓ mg., ⌓⁰ abd.
12	14.4	15.1	16.1	5.0	6.0	12.8	10.9	**5.2**	7.1	7.0	75	65	71	S 4	NW 4	WNW 3	3	6	6		⌓ mg.
13	18.0	**18.8**	18.4	5.8	8.6	10.7	10.4	7.3	7.4	7.4	88	77	78	S 4	NW 5	WNW 4	10	10•	10		◉⁰ sch. a, p.
14	14.0	11.9	11.9	5.3	7.0	10.5	9.8	6.1	6.5	8.0	81	69	88	SSE 3	ESE 2	SSW 3	8	10•	10•	0.0	⌓ mg., ◉⁰ p, ◉⁰ sch. abd.
15	15.3	17.6	17.4	6.7	10.2	11.7	9.8	8.7	8.4	8.8	94	83	98	S 4	NW 5	E 1	10	10	10•	2.0	◉⁰ sch. früh, a, p, ◉⁰ spätabd. ≡⁰ p, ≡ abd.
16	15.0	13.7	12.4	9.8	12.1	14.1	12.2	9.4	**10.2**	10.1	90	86	96	S 3	NE 2	NW 0	10	10	10	2.8	
17	11.3	10.3	09.7	10.5	10.6	14.2	14.8	8.9	9.5	8.3	94	79	66	NNE 3	NNW 2	SSW 2	10	8	9		⌓ mg.
18	08.7	06.7	05.1	10.6	13.1	**16.6**	13.6	6.7	6.6	6.6	60	48	57	S 6	S 6	S 5	3	5	10		
19	04.2	06.2	06.1	10.2	10.4	13.4	11.0	6.9	8.6	8.0	74	75	81	ESE 1	NW 4	NE 4	6	9	10		◉⁰ sch. mtg.
20	99.8	94.4	91.7	8.7	11.2	12.3	11.3	6.4	6.1	5.8	65	58	58	ESE 5	ESE 7	SSE 7	10	10	9	0.0	◉⁰ sch. a.
21	93.8	90.9	86.5	10.9	11.6	11.0	13.9	5.4	8.8	7.8	53	90	66	SSE 7	ESE 1	E 4	10•	10•	10	0.0	◉⁰ sch. a, p, ≡⁰ p.
22	82.5	86.1	88.9	7.1	7.8	12.0	9.9	7.1	8.6	8.1	90	83	89	SSW 3	NNW 1	NNE 2	10•	9	7	4.9	◉ sch. n, ◉⁰ a, ◉⁰ sch. p, ♊.
23	87.6	81.9	79.1	**4.4**	10.4	12.4	13.9	5.9	6.3	6.9	63	59	58	SSE 5	SE 7	S 4	10	10•	9	0.9	◉⁰ sch. n. a, p.
24	89.0	93.8	96.0	9.8	10.5	11.5	9.2	7.8	8.1	7.5	82	81	88	S 1	NNE 2	ESE 1	10≡	9	4	1.8	◉⁰ sch. n, mg. ◉ sch. a, ◉⁰ sch. p, ≡⁰ mg., a.
25	01.5	01.9	03.5	5.4	6.0	11.6	8.9	6.0	7.7	7.4	87	76	87	S 3	NE 2	SW 3	9	6	10•	2.8	⌓² mg., ◉⁰ p, ◉ abd.
26	04.2	04.5	05.0	5.7	7.7	11.7	10.0	6.9	7.9	7.1	89	78	79	S 3	NW 3	WNW 3	9•	6	10	1.7	◉⁰ sch. n, spätabd.
27	07.7	10.2	12.1	6.6	7.6	10.2	8.6	7.1	6.7	7.4	91	72	89	SW 2	NNW 4	W 1	10	10	10	1.9	◉⁰ sch. n, a, p, abd.
28	16.5	13.0	07.9	4.7	5.1	12.1	8.7	5.7	6.5	6.4	88	62	76	S 5	W 1	SSW 1	6	2	9	0.5	◉⁰ sch. n, ⌓ mg.
29	10.0	04.1	08.3	4.7	9.1	10.4	7.7	7.9	6.7	6.3	92	72	80	SSW 3	WNW 4	SSW 3	10•	10	3	4.9	◉ n, ◉⁰ sch. a, p, ≡⁰ mg., a.
30	14.8	15.0	12.6	5.8	7.3	11.1	9.1	6.3	6.1	6.1	83	62	71	SW 3	S 3	SW 2	10	10	10	4.1	◉⁰ sch. n, mg.
M.	01.0	00.8	00.8	7.3	9.0	12.2	10.8	7.1	7.5	7.6	83	72	79	3.1	3.4	2.7	8.6	7.8	7.8	109.4	

Oktober.

Datum.	Luftdruck. 8	2	7	Luft-Temperatur. Min.	8	2	7	Absolute Feuchtigkeit. 8	2	7	Relative Feuchtigk. 8	2	7	Richtung und Stärke des Windes. 8	2	7	Bewölkung. 8	2	7	Niederschl.	Bemerkungen.
1	08.1	10.3	11.8	6.8	8.8	8.1	8.9	6.6	**7.1**	5.8	78	88	67	W 8	W 6	WSW 6	10•	10•	10•	1.0	◉⁰ sch. n, mg., ◉ sch. a, ◉⁰ sch. p, abd.
2	06.5	10.0	09.2	3.9	3.9	8.4	7.4	5.9	6.4	6.0	97	78	79	SSW 1	W 5	SW 4	10•	8	9	28.0	◉ sch. n, ◉ mg., ◉⁰ sch. p.
3	96.0	98.2	00.1	3.9	6.0	6.5	2.6	6.1	4.7	4.4	88	65	79	W 2	WNW 7	W 8	9	10	8	10.0	◉ früh, ◉⁰ sch. mg., a, p, △⁰ a, p, ↗ p, abd.
4	06.5	07.8	02.0	1.7	3.5	3.5	2.9	4.5	5.4	5.2	77	92	91	NW 8	W 5	WSW 4	10•	10	10	8.3	◉ ✶ sch. n, ✶⁰ sch. u. ◉⁰ sch. a, p, abd. ⌊ u.
5	08.7	13.6	15.2	1.7	3.1	5.5	3.0	4.9	5.0	4.8	87	74	85	WNW 8	NW 7	WNW 5	10•	9	10	14.6	↗, ◉ u. ◉ ✶⁰ n, ◉⁰ sch. a, p, ⌊ a. △⁰ abd.
6	00.9	94.0	88.1	0.6	0.6	4.1	7.5	4.7	6.0	6.1	98	98	79	ESE 1	ESE 1	W 7	10✶	10•	10•	6.6	◉⁰ u. ✶⁰ n, ✶ mg., a, ◉ sch. p, ◉⁰ sch. abd.
7	03.8	07.7	10.5	0.6	5.2	5.5	4.6	4.7	4.8	4.9	71	71	78	WNW 6	NW 5	WNW 4	9	10•	8	13.1	◉ sch. n, a, △ a, ◉⁰ sch. a, p. ≡ p, ↗ abd.
8	16.2	15.9	11.4	1.8	2.4	5.2	4.7	4.9	5.4	4.6	89	81	71	S 3	SW 3	SW 3	9	9	10	5.6	◉⁰ sch. n, a, p.
9	00.6	00.4	98.3	2.0	9.2	8.7	8.9	6.6	**7.1**	6.8	76	86	80	W 9	WNW 8	WNW 9	10	10•	10•	9.5	◉ n, ◉⁰ sch. a, p, abd. ↗ böen abd. ♊.
10	03.5	07.1	06.7	0.9	1.3	2.2	-0.4	4.6	4.1	4.2	91	77	93	WNW 7	W 6	WNW 6	10△	6	10	7.1	◉ sch. n, △ sch. u. ✶⁰ mg. a, p, ✶ sch. abd.
11	05.6	03.5	01.7	-0.5	0.5	2.7	0.4	4.3	4.1	4.5	99	74	96	WNW 4	WNW 4	W 3	10✶	10	10	11.5	✶⁰ sch. n, a, p.
12	98.3	97.5	96.5	-0.7	0.0	1.1	0.3	4.4	4.3	4.5	96	87	96	WNW 1	WNW 1	W 3	10✶	10✶	10✶	23.8	✶² n, ✶² sch. a, ✶⁰ sch. p.
13	91.9	92.7	94.6	-1.2	-0.8	2.1	-1.3	4.1	3.7	3.5	95	69	83	SSW 2	E 1	ESE 3	10	7	9	21.4	✶ sch. n, ✶⁰ sch. mg., ♊.
14	99.9	01.7	02.9	-7.3	-6.5	-2.4	-3.7	2.5	3.3	3.0	86	86	85	S 4	SSE 3	SSW 3	5	6	6		⌣⁰ mg.
15	97.9	00.9	01.6	-6.8	-2.5	-0.3	-1.9	3.5	3.8	3.5	91	85	87	S 4	NNW 4	S 4	10	8	10	6.9	✶ sch. früh, ✶⁰ sch. a, p.
16	00.6	01.5	02.6	-2.6	-0.6	2.5	0.1	4.1	3.5	4.4	93	63	96	SSW 3	S 1	SSW 3	10	10	10	3.7	✶⁰ sch. früh.
17	04.4	05.2	04.3	-2.3	-1.4	1.3	-3.1	3.8	3.9	3.2	92	78	88	ESE 3	NE 3	SE 2	10	10	8	3.8	✶⁰ sch. früh.
18	06.4	08.3	09.1	-8.6	-8.1	-2.7	-6.1	**2.1**	3.1	2.5	83	81	83	SSE 3	SSE 1	S 3	1	3	4		⌣ mg., ♊.
19	09.8	10.1	10.7	**-9.5**	-6.8	-0.6	0.2	**2.1**	3.6	4.1	74	80	88	S 4	SSW 3	SSE 4	10	10	9		◉⁰ sch. a, ✶⁰ sch. mtg. p.
20	06.2	06.0	06.4	-7.1	1.3	2.3	0.7	4.2	4.2	4.7	83	77	96	SW 3	W 4	S 2	10✶	10•	10•	3.0	✶⁰ sch. n, ✶ sch. mg. a, ✶ ◉ p, abd.
21	03.9	01.4	99.2	0.3	0.3	2.5	1.2	4.3	3.6	2.4	92	65	47	SSE 2	E 4	SE 5	6	2	9	14.9	◉ ✶⁰ u. ◉⁰ n, ♊.
22	92.8	90.8	89.1	-0.2	3.6	4.8	4.1	3.2	3.2	3.4	54	50	55	S 6	S 7	SSW 8	10	8	8	0.2	◉⁰ sch. n, ↗ p, abd., ♊.
23	86.8	86.2	85.3	3.4	4.9	6.1	6.4	3.7	4.3	4.6	56	62	64	S 6	ESE 4	ESE 3	7	9	10•		◉⁰ sch. p, abd.
24	**84.0**	**84.0**	**84.0**	4.7	6.4	8.9	7.9	5.1	5.3	5.4	71	62	68	ESE 4	SE 6	SE 3	8	10	8	0.4	
25	85.2	87.8	90.1	6.0	7.9	**11.1**	9.0	6.3	5.9	5.7	79	60	67	E 2	S 4	S 3	8	6	9	2.2	◉⁰ sch. früh.
26	94.4	97.3	97.4	4.9	5.6	6.8	3.5	5.5	6.4	5.4	82	87	92	E 2	E 2	E 1	9	10≡	3≡		◉⁰ sch. a, ≡⁰ a, ≡ p, abd. ⌓ abd.
27	93.9	94.1	92.6	2.2	10.4	11.0	9.0	5.9	5.6	5.6	63	58	66	S 6	S 5	S 4	10•	10	4	0.0	◉⁰ sch. mg.
28	88.7	88.6	92.6	6.2	6.2	8.4	8.8	5.8	6.3	5.4	82	77	64	ENE 1	WSW 1	S 3	4≡	9	10		◉⁰ sch. p, ≡⁰ mg., a, p.
29	98.9	02.0	01.5	4.4	6.0	7.9	4.9	5.7	6.3	5.6	82	79	86	SW 4	SSW 2	E 2	9•	9≡	6≡	1.7	◉⁰ sch. n, a, p, ≡⁰ mtg. p, abd.
30	07.6	11.5	14.3	0.8	1.5	4.9	3.5	4.7	5.7	4.0	93	87	69	S 4	WNW 1	NW 5	10≡	10	5	0.8	⌓ mg., ◉⁰ sch. a, ≡⁰ a, p, ♊.
31	19.7	**20.3**	**20.3**	-0.6	-0.6	2.5	3.1	3.7	3.3	3.6	84	60	62	E 3	ESE 4	E 3	2	7	10	0.3	⌣⁰ mg., a, p.
M.	00.9	01.8	01.6	0.3	2.3	4.5	3.1	4.6	4.8	4.6	83	75	79	4.0	3.8	4.1	8.6	8.6	8.5	198.4	

$H = 34\,m$, $H_b = 37.0\,m$ — $\varphi = 63^0\ 26'$ N

$C_y = 1.55$ mb bei 994 mb — $\lambda = 10^0\ 25'$ E

November.

Datum.	Luftdruck. 900 oder 1000 + 8	2	7	Luft-Temperatur. Min.	8	2	7	Absolute Feuchtigkeit. 8	2	7	Relative Feuchtigk. 8	2	7	Richtung und Stärke des Windes. 8	2	7	Bewölkung. 8	2	7	Niederschl.	Bemerkungen.
1	21.8	21.0	19.7	-0.8	2.6	2.8	2.0	3.2	2.8	2.7	58	50	51	ESE 3	S 6	S 4	9	9	4		✱⁰ sch. a, ◎⁰ sch. p, ✱⁰ sch. abd.
2	15.6	14.3	12.9	1.6	3.3	3.9	2.1	2.9	3.7	4.6	50	61	85	S 5	S 3	NE 2	10	10•	10*		
3	06.6	03.2	01.1	2.0	3.1	4.3	1.8	4.6	4.0	4.8	81	65	91	ESE 2	E 2	SE 2	10	9≡	10•	0.4	◎⁰ abd. ≡⁰ a, p. p, ♖.
4	94.4	95.3	97.7	1.4	1.7	2.4	1.8	4.6	4.1	3.8	90	75	73	ENE 1	NNW 4	NW 5	10•	10	10	0.9	◎⁰ sch. n, ◎ ✱⁰ mg., a, ≡⁰ mtg. ◎⁰ sch.
5	94.2	91.3	91.9	0.8	1.4	2.1	0.0	4.1	4.8	4.5	82	89	98	S 5	S 3	E 2	10	10•	10	0.6	✱⁰ sch. mg., a, ◎ ✱ p, ≡⁰ mtg.
6	91.6	94.6	97.6	-1.9	-1.2	0.1	-3.2	4.0	3.9	3.2	94	83	88	NE 1	N 4	E 4	10	7	8	2.6	✱⁰ sch. n.
7	98.2	98.0	98.2	-8.1	-7.0	-5.0	-7.4	2.2	2.4	2.3	79	75	84	SSW 3	SE 2	SSE 3	8	8	8		⌣⁰ abd.
8	99.4	99.2	98.7	-11.6	-11.1	-8.5	-6.9	1.6	1.8	1.7	79	73	62	S 4	SSE 2	SE 4	2	0	4		⌣ mg., ⌣⁰ abd.
9	96.7	96.9	98.7	-12.2	-9.0	-4.6	-5.4	1.6	2.1	2.0	69	65	63	SE 3	S 5	SSW 5	0	6	10		⌣⁰ abd.
10	06.1	08.3	10.0	-9.6	-6.0	-3.4	-3.3	2.1	2.5	2.5	70	70	68	SSW 4	S 2	S 4	2	2	10		⌣⁰ abd.
11	14.9	18.0	19.5	-6.3	-1.1	-0.7	0.1	3.4	3.7	3.8	79	84	81	S 3	SSW 2	SSE 3	10	7	10	3.0	✱⁰ sch. n, △⁰ sch. mg., ✱⁰ sch. a.
12	16.9	16.5	17.3	-2.0	3.6	4.5	4.6	3.8	4.3	4.1	63	68	65	SSW 4	S 3	S 4	10•	10	10	2.1	◎⁰ mg., a.
13	18.2	18.0	16.3	-1.0	0.3	1.1	0.5	2.9	3.7	3.8	62	73	80	S 5	SSE 3	SSE 1	7	9	10	0.8	⌣⁰ a.
14	11.2	11.1	11.3	-1.0	-0.9	0.6	0.6	3.5	3.5	3.5	82	72	72	SSW 3	SSW 3	WSW 3	10	8	10		
15	13.7	14.9	14.4	-1.9	1.5	2.4	-0.7	4.0	4.2	3.8	78	77	86	S 3	ESE 1	SE 3	10	10≡	9≡	0.7	✱⁰ sch. früh, ≡⁰ mtg., p, abd. ⌣⁰ abd.
16	13.1	11.9	14.8	-3.7	-3.2	-1.0	-1.7	2.9	3.5	3.7	80	82	90	S 3	ENE 2	SSW 3	7	6	10		⌣⁰ mg., a, ≡⁰ mtg., p, ✱⁰ sch. p.
17	22.8	25.9	**26.6**	-3.3	2.1	3.0	2.9	4.4	4.2	4.5	82	74	79	SW 4	S 3	SSW 3	9	9	10	2.1	◎ ✱⁰ früh, ◎⁰ sch. a, p.
18	24.0	22.4	21.0	1.7	2.4	2.6	6.5	3.5	3.5	4.7	65	63	65	S 5	S 5	SSW 4	9	10	10	0.1	◎⁰ sch. p. p, abd. △⁰ abd.
19	10.1	06.7	05.6	1.1	**8.4**	7.7	6.5	5.0	**6.6**	5.6	61	85	78	SW 7	W 4	W 8	10	10•	10•	0.3	◎⁰ früh, ⸗ böen n, ◎⁰ u. △⁰ sch. a, ◎ sch.
20	07.6	11.5	12.5	3.4	3.9	2.3	2.0	4.5	4.8	4.4	73	87	84	W 8	W 5	W 5	10	10•	10*	21.6	◎ u. ⸗ n, ◎⁰ u. △⁰ sch. a, ◎ ✱⁰ p, abd.
21	07.4	07.2	07.0	0.7	1.9	1.9	1.2	4.1	4.2	4.0	78	80	80	WNW 5	W 3	W 3	10	9	9	11.5	◎ ✱ sch. n, ✱⁰ sch. a, ✱ sch. mtg., ✱⁰ sch. p.
22	03.2	94.6	90.6	-2.4	-1.2	0.3	0.5	3.7	4.4	4.4	88	94	92	E 3	SSE 1	W 1	10	10*	10*	2.2	✱⁰ sch. früh, ✱ a, ✱⁰ mtg., ✱⁰ p, ✱ abd.
23	00.7	00.7	01.0	-1.9	-1.1	-0.2	0.3	3.8	3.7	4.0	88	81	86	S 4	S 4	W 4	7	9	10	11.4	✱⁰ sch. früh, a, mtg. p, abd.
24	93.8	93.8	93.0	-2.8	-2.5	-2.3	-1.6	3.4	3.1	3.4	88	80	83	WNW 6	WNW 6	W 6	10	10*	10*	8.2	✱ sch. n, a, p, abd.
25	97.2	00.5	03.4	-3.3	-1.9	-2.3	-2.0	3.4	3.6	3.6	85	91	89	WNW 1	NNW 5	NNW 5	10	10*	10	10.0	✱ sch. n, a, ✱⁰ sch. p.
26	02.7	94.9	**87.3**	-4.4	-3.6	-2.9	-2.8	3.0	2.7	2.9	85	71	76	SSW 5	S 3	S 5	10	10	10*	10.6	✱ sch. n, ✱⁰ sch. a, ✱ sch. p.
27	90.8	90.5	90.3	-4.2	-3.8	-6.6	-6.7	2.8	2.3	2.4	79	80	86	SSW 3	SE 2	SSE 2	10	7	8*	7.9	✱⁰ sch. n, a, p, abd., ⌣⁰ abd.
28	97.3	03.9	05.8	-8.2	-2.6	-3.2	-6.0	2.8	2.6	1.9	74	71	64	E 7	E 3	E 4	9	9	9	1.2	✱⁰ sch. n, ⌣⁰ mg.
29	03.0	02.9	03.2	-10.2	-9.9	-9.4	-11.5	1.6	1.5	1.4	70	65	70	SSW 2	SSE 2	SSE 3	10	6	0		
30	07.6	08.1	07.5	**-15.8**	-15.2	-12.3	-11.1	**1.1**	1.3	1.5	76	72	75	SSW 6	SSE 4	SSW 4	10	10*	10		✱⁰ sch. a, ≡⁰ a, mtg., ✱⁰ sch. mtg., p.
M.	06.0	05.9	05.8	-3.5	-1.5	-0.7	-1.2	3.3	3.4	3.4	76	75	78	3.9	3.2	3.6	8.6	8.3	9.0	98.2	

December.

Datum.	Luftdruck. 900 oder 1000 + 8	2	7	Luft-Temperatur. Min.	8	2	7	Absolute Feuchtigkeit. 8	2	7	Relative Feuchtigk. 8	2	7	Richtung und Stärke des Windes. 8	2	7	Bewölkung. 8	2	7	Niederschl.	Bemerkungen.
1	02.0	01.0	02.2	-15.3	-8.3	-5.5	-1.0	2.1	2.5	2.9	83	82	67	SSW 5	SSE 5	NW 5	8	10*	8	1.9	✱⁰ sch. n, ✱ sch. a, ✱⁰ sch. p.
2	06.6	07.8	11.1	-9.1	-6.7	-4.7	-4.0	1.6	2.8	2.5	57	86	72	S 4	SE 1	SSE 3	10	10	10	2.5	✱⁰ u. ≡⁰ mtg., ✱⁰ sch. p.
3	17.3	19.5	**19.6**	-6.7	-3.0	-3.1	-3.4	2.6	3.1	2.7	71	83	75	E 3	SSW 0	SSE 4	10	10≡	10	2.2	≡⁰ mtg., p.
4	16.5	17.2	17.7	-4.3	2.9	3.8	3.5	4.9	4.4	4.6	86	73	78	WNW 3	NW 4	W 4	10•	9	10	1.8	◎ früh, mg., a, ◎⁰ sch. p, abd.
5	17.8	14.2	08.3	1.4	1.7	2.8	2.5	4.9	5.0	4.2	94	89	75	SSE 3	S 3	SSW 2	10•	10	10	3.4	◎⁰ n, mg., ◎ a, ◎⁰ sch. p.
6	88.7	98.1	07.3	1.0	4.0	4.1	3.5	4.5	4.8	4.8	73	79	82	WNW 8	WNW 9	WNW 7	10•	10•	10•	5.7	◎ sch. u. ⸗ böen n, ◎⁰ sch. a, p, abd.
7	07.8	06.6	06.0	0.1	0.4	1.8	0.1	4.1	3.2	3.3	86	62	71	SSW 3	SE 1	SE 1	9	9	10	6.7	◎ sch. früh.
8	00.2	99.8	99.0	-1.1	1.7	4.2	**4.9**	3.6	3.8	3.7	69	62	56	ESE 1	ESE 2	SSW 2	10≡	8	10	0.1	◎⁰ sch. n, a, ≡⁰ a, mtg.
9	94.7	94.8	94.2	1.7	**4.9**	4.0	1.4	3.7	3.0	2.7	56	48	53	S 8	S 4	ESE 2	10	10	10	0.0	
10	93.4	91.1	90.1	-0.2	0.0	2.4	1.4	3.6	3.3	3.5	77	59	68	S 3	ESE 1	ESE 1	2	8	10	0.1	◎⁰ sch. früh, ≡⁰ a, mtg.
11	91.5	93.2	93.5	-2.3	-2.3	-4.1	-2.7	2.8	3.0	3.4	70	89	91	SE 3	SSE 4	SSE 3	10	10*	10*		✱⁰ mtg., ✱ p.
12	94.1	95.6	95.1	-4.5	-0.1	-1.5	-3.9	3.8	3.6	2.6	83	88	74	NW 6	NNW 4	SSE 2	10	8	8	4.2	✱⁰ sch. früh, ✱ sch. p, ✱⁰ sch. abd.
13	93.9	98.5	03.2	-4.9	-3.8	-6.9	-6.5	3.0	1.8	1.9	87	65	66	ESE 4	E 3	SSE 2	10	7	10	2.6	✱⁰ sch. n.
14	11.9	13.8	15.2	-12.4	-11.9	-12.5	-14.8	1.5	1.4	1.1	77	76	72	S 5	S 3	SSE 5	10*	1	9	0.1	✱⁰ sch. mg., ✱⁰ a, ♖.
15	17.6	15.2	13.6	**-18.2**	-17.7	-14.8	-15.4	0.9	**0.8**	0.9	71	53	61	SSE 3	ESE 2	SSE 2	1	5	9	0.0	⌣⁰ mg.
16	02.1	01.7	01.0	-17.7	-3.5	-0.4	-1.1	3.1	4.0	3.7	87	89	86	SSE 5	SSE 3	SSE 2	10*	10	10*	7.0	✱ n, mg., ✱ sch. a, ⌣, ✱⁰ sch. p, abd.
17	90.9	91.6	91.0	-3.5	-2.3	-3.6	-4.6	2.8	2.9	2.6	73	82	78	WNW 6	WNW 6	WNW 8	7	8	10	12.8	✱ früh, a, ✱⁰ sch. u. △⁰ sch. a, p, ⸗ böen abd.
18	86.3	89.3	93.2	-4.8	-1.4	-5.2	-9.4	2.8	2.0	1.6	68	64	71	WNW 8	NNE 4	ESE 1	10	9	8≡	10.2	✱⁰ sch., △⁰ sch. u. ⸗ böen n, mg., ✱ sch. a,
19	96.7	95.3	92.6	-14.2	-13.1	-14.0	-10.2	1.4	1.1	1.6	79	69	73	SSE 2	SSE 5	SSE 6	1	10	9	2.9	✱⁰ sch. früh, ⌣, ✱⁰ sch. p. ≡⁰ abd.
20	89.5	90.7	91.6	-15.7	-3.5	-3.3	-5.1	2.9	3.4	2.3	80	95	72	SSW 5	SSW 4	SE 3	5	5	7	5.1	✱ sch. früh, a, p.
21	92.6	91.9	87.8	-12.3	-9.3	-4.8	-3.7	1.5	2.1	2.2	65	65	62	SSE 1	E 3	ESE 4	10≡	10	10	6.7	≡⁰ mg.
22	82.2	81.2	83.1	-9.3	-3.6	-5.6	-7.6	2.9	2.6	2.3	82	84	87	WNW 2	ENE 4	SSE 3	10*	10*	10	0.0	✱⁰ mg., ✱ a, p, ⌣⁰ abd.
23	84.1	81.9	82.0	-10.7	-8.1	-6.1	-6.4	1.9	2.4	2.2	74	81	75	E 4	NE 3	SSE 3	10	10*	10	5.2	⌣⁰ mg., ✱⁰ sch. a, mtg., p.
24	82.1	82.0	81.9	-8.1	-4.5	-3.7	-4.0	2.9	3.2	3.1	86	92	89	S 2	NE 1	NE 2	10*	10≡	10*	3.9	✱ sch. n, mg., ✱⁰ sch. a, p, abd. ≡⁰ mtg., p.
25	81.0	81.5	82.7	-11.0	-9.8	-11.0	-11.3	1.6	1.6	1.3	70	79	67	SSE 3	SSE 1	SSE 3	1	0	0	4.3	✱⁰ sch. früh, ≡⁰ mtg.
26	85.1	87.7	89.5	-13.9	-12.4	-10.2	-7.7	1.3	1.4	2.0	72	66	78	SSE 4	SSE 4	SSE 2	9	10	10		⌣⁰ mg.
27	89.1	87.0	84.7	-12.4	-4.2	-5.1	-6.4	2.9	2.6	1.7	86	82	60	SSE 1	SE 2	SSE 2	10	5≡	0		≡⁰ a, mtg., ⌣⁰ mg. abd., ≡⁰ p, ♖.
28	84.7	85.0	86.0	-9.0	-7.8	-5.3	-4.5	1.9	2.2	2.4	75	71	73	SE 1	SE 2	SSE 1	5≡	7≡	10≡		⌣⁰ mg., ≡⁰ a, p.
29	82.1	77.4	70.3	-8.2	-5.0	-1.1	3.3	2.6	3.2	3.4	83	75	58	ESE 1	SE 2	SSW 6	9≡	6≡	10		≡⁰ a, ●⁰ sch. p, ≡⁰ p.
30	**54.7**	56.7	57.9	-5.5	4.5	2.5	3.4	4.0	**5.3**	5.1	63	96	87	ESE 2	ENE 1	W 4	10	10≡	10•	0.4	●⁰ sch. früh, ● p, ◎⁰ sch abd.
31	67.4	73.3	80.5	1.6	3.0	2.9	2.1	5.0	5.1	4.8	88	90	89	S 3	WSW 2	SE 1	10	9	10≡	11.3	●⁰ sch. n, a, p, abd. ≡⁰ abd.
M.	93.7	94.2	94.6	-7.4	-3.8	-3.4	-3.5	2.9	3.0	2.8	76	77	73	3.6	3.0	3.1	8.3	8.2	9.0	101.1	

$H = 11$ m, $H_b = 16.4$ m — $\varphi = 65^0\ 28'$ N

$C_g = 1.75$ mb bei 1009 mb — $\lambda = 12^0\ 13'$ E

Januar.

Datum.	Luftdruck, 900 oder 1000 + 8	2	7	Luft-Temperatur. Min.	8	2	7	Absolute Feuchtigkeit. 8	2	7	Relative Feuchtigk. 8	2	7	Richtung und Stärke des Windes. 8	2	7	Bewölkung. 8	2	7	Niederschl.	Bemerkungen.
1	80.6	79.8	78.9	0.3	2.5	1.8	2.0	3.1	3.7	3.4	56	71	64	SE 3	E 4	E 4	10	9	3	4.4	●⁰ sch. n.
2	62.0	56.6	**56.1**	0.2	3.2	3.4	3.2	3.6	4.5	5.0	63	76	87	E 8	SE 4	SSE 2	9	10●	10●		●⁰ mtg., p.
3	58.6	63.0	67.2	2.4	3.6	3.4	2.6	5.3	5.1	5.3	90	87	96	SW 2	SW 3	SW 1	3	10●	10●*	1.2	●⁰ sch. n, a, ● ✱ p.
4	70.8	71.2	74.5	0.4	3.0	3.0	3.2	4.7	5.3	4.8	83	93	83	S 5	SW 5	W 4	10●△	10●	9●	14.4	△ u. ● n, a, p.
5	81.5	83.8	82.5	1.8	4.5	3.8	2.8	4.2	4.0	5.0	66	65	89	W 6	W 3	S 1	7	8	10	7.0	●⁰ sch. n.
6	86.0	88.5	91.3	-0.1	2.8	3.0	3.5	3.9	4.7	5.0	69	83	85	SW 3	W 4	NW 6	10*	10●	10●	8.8	✱ n, ● a, p.
7	92.2	89.1	88.7	0.2	1.0	0.6	0.8	3.2	2.9	4.1	65	61	85	S 2	E 3	SE 2	2	10	10*	5.7	●⁰ sch. n, ✱⁰ abd.
8	93.5	95.0	95.6	-0.3	3.0	3.6	3.8	4.7	4.9	4.6	83	83	77	SW 2	SW 4	W 3	10●	10●	3	7.6	✱⁰ u. ● n, ●⁰ a, ● sch. p.
9	91.8	94.7	98.6	1.2	2.0	1.0	1.0	4.4	4.6	4.6	82	92	92	S 2	SW 1	N 3	10	8*	10*	2.9	✱ sch. a, p.
10	09.3	04.5	93.9	-0.5	2.0	0.8	2.0	4.4	4.1	4.7	82	85	89	NW 3	SE 4	S 8	10*	10*	10●*	6.6	✱ sch. n, ✱⁰ a, ● ✱⁰ p.
11	96.6	00.8	04.9	-0.6	6.2	6.0	7.6	6.2	6.8	**7.3**	88	97	94	SW 4	SW 3	SW 4	10●	10●	10●	10.0	● n, a, ●⁰ p.
12	10.0	10.2	09.8	5.5	7.0	7.2	6.8	6.9	6.7	6.7	93	89	91	SW 2	SW 4	SW 4	10●	10●	10●	9.0	●⁰ n, a, ● p.
13	07.0	06.5	05.5	5.4	6.8	6.2	6.0	6.3	6.0	6.4	86	86	91	SW 6	SW 4	SW 4	10	10●	10●	7.0	● sch. n, ●⁰ a, p.
14	97.3	86.6	82.8	4.4	6.8	**8.0**	**8.0**	5.2	4.3	5.8	71	55	72	SE 4	SE 8	SW 6	10●	10	10●	3.7	●⁰ n, ●⁰ sch. a, p.
15	79.0	78.8	84.7	2.9	6.2	5.6	1.8	4.8	4.7	3.5	67	70	67	SW 9	WSW 8	W 8	10	10△	10△	6.3	△ u. ● sch. n, a, p.
16	92.4	91.6	93.5	-0.6	1.8	7.6	5.6	4.5	5.6	5.3	85	72	79	SE 6	W 8	W 8	10●*	10●	10	4.2	✱ u. ● n, ● ✱ a, ●⁰ sch. p.
17	04.2	12.8	11.5	0.5	5.5	5.3	5.0	5.2	4.9	5.7	77	74	87	W 9	W 3	S 2	5●	10	10	16.1	● n, ●⁰ sch. a, p.
18	06.2	06.6	03.2	4.4	7.4	7.8	7.6	7.2	6.6	6.7	94	83	86	SW 3	SW 5	SW 6	10●	10	10●	4.0	●⁰ n, ● sch. a, p.
19	11.0	24.9	32.9	0.2	1.2	1.2	3.0	4.1	3.9	3.8	81	77	66	WNW 9	NW 8	NW 6	8△	10*	10*	8.2	△ u. ✱ sch. n, ✱ a, p.
20	31.8	31.9	31.4	0.5	5.0	6.6	6.4	5.5	5.6	5.9	84	77	83	W 4	SW 4	SW 4	10	10●	10●	2.5	●⁰ n, a, p.
21	30.3	31.1	31.1	4.4	5.0	5.0	5.2	6.0	5.7	4.4	92	87	66	SW 3	SW 2	S 2	10●	10●	5	3.6	●⁰ n, a, p.
22	29.6	28.4	25.8	1.7	4.0	1.8	0.0	3.6	4.7	4.2	59	89	91	0	0	0	7	10	10	0.5	
23	19.7	20.0	19.4	-2.9	-0.4	3.0	3.0	3.9	4.7	4.7	87	83	83	SE 2	S 1	0	8	9	10		
24	21.9	26.5	30.1	-0.4	4.6	4.0	3.0	5.9	5.7	4.7	94	93	83	N 1	N 1	N 2	10●	10●	5	1.5	●⁰ n, a, p.
25	37.0	40.3	**41.3**	0.4	3.0	4.0	4.4	4.7	4.5	4.4	83	73	70	S 1	NW 2	NW 3	10	10	10	0.4	
26	39.4	39.2	38.2	0.2	4.2	5.6	4.6	5.2	5.3	4.9	84	79	78	SW 3	W 3	W 4	10	10	10		
27	32.1	31.2	28.5	3.3	4.5	4.8	4.0	5.4	5.4	5.5	86	84	90	SW 3	SW 1	0	10	10	10	1.5	● sch. n.
28	20.0	17.9	15.6	2.2	2.8	3.0	-0.4	4.8	4.1	3.5	86	72	78	E 1	ESE 2	E 1	9	5	2		
29	08.2	02.2	94.5	**-4.3**	-2.8	-0.4	-0.8	2.8	2.8	3.0	74	62	69	E 2	E 2	E 3	0	2	1		
30	77.7	75.6	74.7	-2.8	0.4	3.0	2.8	**2.0**	3.0	3.3	43	53	59	SE 8	SE 6	SE 4	7	2	5		
31	74.7	76.3	78.9	0.4	3.0	3.2	2.0	4.7	4.4	4.2	83	76	78	SE 1	SE 2	E 1	10	7	10		
M.	01.7	02.1	02.1	1.0	3.5	4.0	3.6	4.7	4.8	4.8	79	78	81	3.8	3.6	3.4	8.6	9.0	8.5	137.1	

Februar.

Datum.	Luftdruck, 900 oder 1000 + 8	2	7	Luft-Temperatur. Min.	8	2	7	Absolute Feuchtigkeit. 8	2	7	Relative Feuchtigk. 8	2	7	Richtung und Stärke des Windes. 8	2	7	Bewölkung. 8	2	7	Niederschl.	Bemerkungen.
1	86.0	90.7	96.2	0.4	0.8	1.2	0.6	4.3	4.8	4.6	88	96	96	E 1	S 1	S 1	10*	10*	8●*	6.6	✱ n, a, p.
2	04.1	00.7	91.3	0.4	2.6	2.2	0.5	4.0	4.2	4.3	72	79	90	W 3	SW 4	SE 6	10	10	10*	7.0	● ✱ sch. n, ✱⁰ abd.
3	91.0	94.2	90.9	-0.5	2.8	3.8	3.6	4.8	4.7	4.9	86	78	83	0	SW 4	S 4	10●*	10	10	7.8	● u. ● ✱ n, a, p.
4	85.6	88.7	91.9	0.4	2.4	1.6	1.2	4.1	3.7	3.7	75	71	73	WSW 6	WNW 5	W 4	10△	9	8△	4.1	△ u. ● sch. n, a, p.
5	79.3	77.3	74.7	-0.8	2.4	2.8	3.0	4.5	5.0	3.8	82	89	66	S 8	SW 4	SW 5	10●	10●	9	2.2	● ✱ sch. n, ● a, ● sch. p.
6	**63.0**	63.7	73.9	-1.0	-0.5	0.6	1.0	4.0	4.6	4.8	89	96	96	SE 6	SE 2	N 6	10*	10*	8	15.1	✱ u. △ n, a, ✱ sch. p.
7	91.5	96.4	99.9	-3.0	-2.0	-1.0	-2.5	3.5	3.7	3.5	87	86	91	S 1	NE 2	0	10*	7	7	10.3	✱ n, ✱⁰ sch. a, p.
8	91.4	83.7	76.2	-5.2	-2.5	-1.0	0.4	2.0	2.4	3.2	52	56	68	E 6	E 6	SE 6	10	10	10	1.2	✱⁰ sch. n.
9	66.2	65.8	64.4	-2.6	2.2	3.4	3.2	5.0	3.9	3.5	93	66	60	S 4	SE 3	SE 5	10●	7	10	0.5	✱⁰ u. ● n, ●⁰ sch. a.
10	77.3	80.8	78.9	-0.6	0.2	0.4	1.4	3.3	4.2	3.3	71	88	64	W 4	SW 3	E 2	5	10*	8	4.8	● u. △ sch. n, ✱ sch. a, p.
11	70.3	75.1	77.4	0.0	2.0	3.0	1.5	4.4	4.5	4.9	82	79	94	S 2	S 3	S 3	10●*	8●*	10●*	1.7	● ✱ sch. n, a, p.
12	81.5	76.9	64.0	0.0	2.5	3.0	**5.8**	3.7	3.4	4.5	67	59	66	SE 3	SE 4	SE 8	10	10	10	5.9	● ✱ n.
13	83.1	87.6	91.8	0.0	2.6	3.0	1.8	4.5	3.8	4.5	81	66	85	SW 4	SE 4	S 3	10●	7	7	4.0	● ✱ u. ● sch. n, ● ✱⁰ sch. a.
14	96.9	00.8	02.3	0.4	2.8	4.6	4.6	4.1	4.5	4.7	72	71	74	E 3	SE 2	E 2	10	10	10	0.0	
15	02.2	01.1	00.3	2.8	4.0	5.4	3.8	4.5	5.3	**5.4**	73	78	80	SE 2	E 2	SE 1	7	10●	10●		● a, ●⁰ p.
16	04.9	06.3	06.5	1.6	2.0	2.8	2.0	4.8	4.7	4.4	91	83	82	NNE 2	NNE 2	NNE 1	10●	8	8	3.5	●⁰ n, a, p.
17	04.6	04.8	04.4	-0.8	3.0	2.6	2.0	4.3	4.2	3.8	76	75	71	E 1	E 3	SE 3	8	10	10	0.2	
18	05.1	06.4	06.4	-0.5	0.0	0.6	-2.0	3.5	3.3	2.7	75	68	67	E 1	E 1	NNE 1	10	0	0		
19	08.8	11.5	12.4	-6.3	-4.8	-1.2	-4.0	1.8	2.4	2.9	54	56	84	0	E 1	E 1	0	1	1		
20	08.2	08.2	08.2	-4.8	-2.2	-1.0	-1.8	3.5	4.1	3.8	89	95	94	S 4	S 2	N 1	10*	9*	10*	4.2	✱ n, a, ✱⁰ sch. p.
21	07.9	09.3	10.0	-7.5	-5.5	-2.4	-3.0	2.5	3.6	3.3	82	93	88	E 3	E 2	E 1	10	9	10	1.7	✱ sch. n, ✱ a, ✱ sch. p.
22	11.9	12.6	11.7	-7.4	-6.4	-2.2	-3.0	1.8	2.3	3.3	63	57	88	E 2	E 2	E 2	10	7	10*	3.0	✱ sch. n, ✱ p.
23	12.3	14.3	14.5	-6.7	-2.2	-1.0	-1.0	1.8	2.8	3.0	46	65	69	SE 3	SE 4	NE 2	10	9	10	1.3	✱ n.
24	16.5	18.1	**18.6**	-4.5	-4.0	-0.2	-2.0	1.6	2.7	2.1	47	58	53	SE 2	E 3	E 2	10	0	1		
25	15.1	14.6	12.1	-4.0	-3.4	-1.0	-0.8	1.8	2.6	2.8	49	60	65	E 4	E 2	E 5	10	10	10		
26	09.5	08.7	09.1	-3.4	-2.6	-1.0	-1.4	2.0	2.4	2.7	52	56	64	E 3	E 6	E 2	10	10	3		
27	08.6	08.5	08.7	-3.2	-2.6	-1.8	-3.4	2.0	2.4	**1.4**	52	58	40	E 3	E 4	SE 2	2	2	0		
28	08.4	08.6	08.0	**-7.8**	-6.8	-2.4	-3.2	1.7	2.2	2.0	59	57	54	SE 2	E 2	E 2	10	1	10		
M.	96.1	97.0	96.6	-2.3	-0.5	0.9	0.3	3.4	3.6	3.6	72	73	75	3.0	3.0	2.9	9.0	7.6	7.8	85.1	

$H = 11$ m, $H_b = 16.4$ m

$C_g = 1.75$ mb bei 1009 mb

$\varphi = 65^0\ 28'$ N

$\lambda = 12^0\ 13'$ E

März.

Datum.	Luftdruck. 900 oder 1000 + 8	2	7	Luft-Temperatur. Min.	8	2	7	Absolute Feuchtigkeit. 8	2	7	Relative Feuchtigk 8	2	7	Richtung und Stärke des Windes. 8		2		7		Bewölkung. 8	2	7	Niederschl.	Bemerkungen.
1	10.3	12.6	13.6	-6.8	-4.4	-2.0	-4.0	1.9	2.5	2.5	56	62	72	E	3	E	2	E	1	8	3	1		
2	18.0	18.7	18.9	-7.9	-3.8	-0.6	-1.2	2.9	4.2	4.0	82	95	94	E	2	E	1	E	1	8	10*	10*		✱⁰ a, ✱ p.
3	20.8	18.8	14.3	-3.8	1.8	2.0	3.0	5.0	4.9	5.3	94	89	93	S	3	S	3	SSW	4	10	10	10●	3.3	✱⁰ n, ◍⁰ p.
4	06.1	07.4	06.2	1.2	1.4	-0.5	0.4	3.4	4.0	4.2	66	89	88	W	5	NW	4	NW	5	9*	10*	10*	5.7	◍ n, ✱ sch. a, p.
5	98.0	83.5	**71.3**	-2.7	-0.6	0.0	-0.4	3.8	4.2	4.1	87	91	91	S	1	S	4	SE	5	10*	10*	10*	2.3	✱⁰ sch. n, a, ✱ p.
6	79.3	85.0	85.6	-3.4	-2.4	-2.8	-5.0	3.3	2.4	2.4	84	65	75	E	4	E	3	NE	2	10*	9	9	13.0	✱ n, ✱⁰ a.
7	82.1	84.8	87.1	-7.8	-7.0	-6.2	-8.2	2.3	1.9	2.1	82	67	83	NE	2	E	2	E	1	10*	5	10	0.0	✱⁰ n, a, ✱⁰ sch. p.
8	87.6	90.0	92.2	-10.2	-7.0	-6.2	-6.8	2.3	1.8	1.5	82	61	54	E	4	SE	4	SE	4	10*	10*	9	1.4	✱⁰ sch. n, a, p.
9	00.5	04.8	08.0	-11.6	-9.8	-5.4	-7.4	**0.5**	1.5	1.5	23	47	58	E	3	E	2	E	3	3	10	10	0.2	
10	16.3	18.4	20.4	-10.4	-7.2	-4.2	-6.0	1.9	2.4	2.0	70	71	67	E	2	E	1	SE	2	10	10	5		✱⁰ sch. a, p.
11	29.1	**31.1**	30.4	-11.0	-10.0	-3.6	-6.0	1.4	2.2	1.8	63	63	61	E	1	SSE	1	E	2	0	10	1	0.0	
12	28.5	27.2	26.4	-9.8	-7.8	-3.0	-4.8	2.0	1.9	1.3	78	50	39	E	1	E	3	NE	3	10	0	5		
13	21.5	18.4	16.0	-7.9	-6.4	-4.2	-5.0	1.3	1.9	2.5	44	56	77	NE	2	E	3	SE	1	5	9	10		
14	13.8	14.9	15.2	-9.8	-8.2	-7.6	-9.0	1.4	1.2	1.2	55	45	53	E	4	E	3	E	3	7	10	10		
15	21.3	25.2	27.6	**-12.0**	-10.2	-5.0	-5.6	1.0	1.7	1.9	48	54	63	E	2	E	3	E	3	0	0	0		
16	24.4	19.0	13.4	-10.2	-5.4	-2.2	-1.8	1.6	1.7	2.5	52	44	63	E	6	E	3	SSE	4	10	10	10		
17	15.9	19.0	18.4	-5.4	1.8	1.8	2.0	4.7	4.5	4.4	89	85	82	NW	4	W	4	SW	3	7	10	10	4.5	◍ ✱ sch. n.
18	10.2	10.3	08.0	-0.9	4.4	4.5	**5.2**	5.8	6.0	**6.4**	93	96	97	SW	2	SW	2	SW	4	10●	10●	10●	5.2	◍ n, a, p.
19	04.6	05.4	03.8	-0.7	1.2	1.6	1.3	4.8	5.0	4.0	96	96	79	SW	4	W	4	NW	3	10●	8*	8*	20.6	◍ n, ✱ sch. a, p.
20	96.2	97.0	99.1	-0.5	1.0	0.8	1.7	4.8	4.7	4.2	96	96	80	N	3	N	2	N	3	10●	10*	8	5.0	✱ sch. n, a, ✱⁰ sch. p.
21	03.9	08.1	08.0	0.1	0.6	0.4	0.0	3.8	3.4	3.1	78	72	67	NE	3	N	2	N	2	5*	3	3	7.1	✱ sch. n, ✱⁰ sch. a.
22	11.0	11.7	09.6	-5.2	-1.6	0.4	-1.0	3.7	4.2	3.8	90	88	88	E	1	S	1	S	1	8	10*	9	0.0	✱ sch. a, p.
23	08.2	07.6	05.1	-4.3	-1.8	2.0	1.2	3.8	3.2	2.7	94	60	53	SE	3	E	3	E	2	8*	5	1	10.5	✱ n, ✱⁰ sch. a.
24	02.9	04.3	05.5	-2.3	0.0	2.5	1.8	2.5	3.3	3.7	53	60	71	E	3	S	3	E	3	5	2	7	0.0	
25	10.2	13.2	14.9	0.0	1.4	3.4	1.4	4.0	4.3	4.5	78	73	89	E	1	N	1	E	1	10	8	10		
26	17.8	18.5	18.8	-3.8	-0.8	2.8	1.0	3.8	3.5	3.1	86	62	62	E	1	SSE	2	SE	1	0	3	3		
27	12.9	09.0	08.6	-2.8	1.2	3.0	1.4	3.1	3.0	4.7	62	53	92	SE	4	SE	5	SW	3	10	10	10*		✱ p.
28	08.1	07.6	06.9	-2.7	-2.0	0.6	-1.8	3.7	3.9	3.1	91	80	76	SW	3	SE	3	SE	2	7*	8*	7	6.6	✱ sch. n, a, p.
29	02.6	03.3	02.4	-2.4	-1.2	-0.2	0.8	3.7	4.3	3.7	88	95	76	S	4	SE	2	SSE	4	10*	10*	10*	2.9	✱⁰ n, a, p.
30	93.1	85.7	83.9	-1.4	1.4	1.2	3.8	2.6	4.1	5.0	51	81	83	SE	4	SE	6	S	6	10	10*	10●	0.5	✱⁰ sch. n, ✱⁰ a, ◍ ✱ p.
31	81.7	87.3	90.1	0.6	2.8	3.6	2.8	4.5	5.1	4.5	79	87	79	SW	3	SW	2	SW	3	5	10*	7	4.0	◍ n, ✱⁰ a, ✱⁰ sch. p.
M.	07.6	08.0	07.4	-4.9	-2.5	-0.7	-1.5	3.1	3.3	3.3	74	72	74		2.8		2.7		2.7	7.6	7.8	7.5	92.8	

April.

Datum.	Luftdruck. 900 oder 1000 + 8	2	7	Luft-Temperatur. Min.	8	2	7	Absolute Feuchtigkeit. 8	2	7	Relative Feuchtigk 8	2	7	Richtung und Stärke des Windes. 8		2		7		Bewölkung. 8	2	7	Niederschl.	Bemerkungen.
1	97.6	98.9	99.1	-0.5	0.2	0.8	0.2	4.1	4.3	3.9	88	88	83	S	3	SW	2	W	2	10*	10*	5	3.7	✱⁰ sch. n, a, p.
2	95.8	88.8	87.5	**-3.0**	0.7	3.2	3.8	3.8	**2.5**	3.3	78	43	54	E	4	SE	6	S	7	10	10	9	3.0	✱⁰ n.
3	85.7	**83.1**	83.7	0.4	1.4	0.0	2.8	4.0	4.2	5.2	78	91	93	SE	6	SSE	7	SW	8	10	10*	10●		✱⁰ a, ◍ ✱⁰ p.
4	98.4	07.2	10.0	-1.4	2.8	5.5	3.2	3.9	4.8	4.6	69	71	80	NNE	3	SW	1	SW	2	2	10	10●	6.0	◍ sch. n, ◍⁰ p.
5	09.1	11.3	12.8	2.6	3.6	6.0	4.8	4.5	4.9	3.8	77	70	59	S	4	SSW	4	SW	4	10●	10●	10●	0.2	◍⁰ n, a, p.
6	15.1	15.2	14.4	3.5	5.0	8.0	7.6	5.0	4.7	4.4	76	59	57	SE	2	S	2	SE	2	10	10	10	0.2	◍⁰ n, a.
7	15.6	17.3	17.4	4.9	7.2	11.6	9.2	5.2	6.1	6.2	69	59	71		0	S	1		0	10	10	8	0.0	
8	17.4	16.4	17.7	3.0	7.0	**12.0**	7.6	4.5	5.8	5.6	61	56	72	E	2	SW	1	SSW	2	5	3	3		
9	17.2	18.6	19.1	2.1	7.8	8.0	8.0	4.0	5.2	5.4	52	64	67	S	3	SW	2	SW	1	5	9	5		
10	21.8	23.4	24.0	1.2	4.2	7.6	7.8	5.0	5.5	5.9	80	70	75	S	1	N	1	N	2	3	0	0		
11	24.7	**25.4**	24.3	1.8	4.6	9.5	9.4	4.7	5.5	5.4	74	62	61		0	SW	2	S	1	10	3	3		
12	21.3	19.8	17.5	2.5	4.2	10.0	8.2	5.2	5.1	5.0	85	56	62		0	SW	2	SW	2	10	10	10		
13	13.4	11.7	10.4	2.1	5.4	8.4	8.0	5.7	5.6	5.4	85	67	67	SW	1	N	1	NE	1	10	7	5		
14	07.3	06.9	06.3	4.4	7.8	9.4	9.8	4.4	4.3	4.1	57	49	45	SE	4	SE	4	SE	4	10	5	5		
15	02.2	99.3	95.7	4.7	6.2	8.4	7.2	4.4	4.8	4.8	62	59	64	E	3	E	6	SE	5	4	8	10		
16	89.2	88.0	88.3	4.2	6.0	8.0	7.0	4.5	4.6	4.9	65	58	66	SE	5	SE	4	SE	4	10	7	7		
17	90.5	92.6	93.2	4.7	6.2	5.2	6.2	4.8	6.0	5.6	67	90	79	SE	4	SW	2	SW	3	10	10●	8		◍⁰ a, p.
18	93.8	96.2	97.6	2.4	4.4	4.7	6.0	5.8	5.9	6.4	93	92	91	SW	2	SW	3	W	2	10●	10●	9	5.8	◍⁰ n, a, p.
19	04.8	08.0	10.1	3.2	3.2	4.5	2.0	4.8	4.6	4.4	83	73	82	N	3	NNW	3	NW	3	7	10	9	10.4	
20	11.5	09.1	07.7	-0.4	3.6	4.2	5.6	4.9	5.6	**6.6**	83	90	97	SE	1	SSE	2	S	2	10	10●	10●		◍⁰ mtg., ◍ p.
21	11.0	14.7	15.1	1.6	3.6	4.0	4.0	5.3	4.5	4.1	90	73	67	W	3	NW	3	W	3	9	10●	10△	8.7	◍ n, ◍⁰ sch. a, △⁰ sch. p.
22	08.1	03.4	02.9	1.0	5.0	8.4	9.0	3.7	3.9	3.9	57	48	46	E	4	SE	4	ESE	4	10	9	10	0.7	△⁰ sch. n.
23	94.2	91.5	92.9	2.9	6.4	6.2	5.0	4.9	4.8	5.5	68	68	84	SE	6	SSE	6	W	1	10	10●	10●		◍⁰ mtg., p.
24	96.6	97.2	96.3	3.3	6.0	7.0	6.8	5.5	5.1	4.8	79	69	66	E	2	N	1	NE	2	5	2	7	5.3	◍⁰ n.
25	97.2	98.7	99.4	2.4	3.0	4.5	6.4	5.5	5.8	5.7	96	92	79	N	1	SW	2	W	2	10●	10●	5	0.0	◍⁰ n, a, p.
26	01.1	03.4	04.5	2.4	4.8	5.9	4.2	5.6	5.4	5.0	87	78	80	SW	3	W	2	SW	2	7●	9	10●	5.5	◍ sch. n, ◍⁰ sch. a, p.
27	09.1	11.1	11.3	0.9	3.4	4.4	4.4	5.2	5.2	4.4	90	84	70	E	1	SE	2	NW	2	8*	7	3	3.6	✱ u. ◍⁰ sch. n, ✱⁰ sch. a, p.
28	11.1	12.4	12.9	-1.2	2.6	2.2	4.6	4.4	4.6	3.6	79	86	56		0	SE	1	N	1	2	7*	5	0.6	✱⁰ sch. a, p.
29	16.6	18.3	18.0	-0.6	3.2	4.6	5.8	4.4	3.9	3.8	76	62	55	NE	1	N	2	N	2	1	5	5	0.0	
30	16.1	14.6	12.6	1.1	4.4	7.2	7.0	3.5	3.6	3.5	55	47	47	SE	4	NE	3	E	4	7	1	8		
M.	06.4	06.8	06.8	1.9	4.5	6.3	6.0	4.7	4.9	4.8	75	69	69		2.5		2.7		2.7	7.8	7.7	7.3	53.7	

$H = 11\,m$, $H_b = 16.4\,m$ — $\varphi = 65^0\ 28'$ N

$C_g = 1.75$ mb bei 1009 mb — $\lambda = 12^0\ 13'$ E

Mai.

Datum.	Luftdruck. 900 oder 1000 + 8	2	7	Luft-Temperatur. Min.	8	2	7	Absolute Feuchtigkeit. 8	2	7	Relative Feuchtigk. 8	2	7	Richtung und Stärke des Windes. 8	2	7	Bewölkung. 8	2	7	Niederschl.	Bemerkungen.
1	08.5	07.1	07.7	**0.1**	3.0	4.2	4.0	3.8	3.5	3.7	66	57	61	E 2	NW 2	NNW 2	7	3	9		
2	10.5	13.9	15.8	1.5	4.0	6.4	9.0	4.5	4.5	5.0	73	62	58	W 2	W 3	W 2	7	3	2		
3	12.3	07.6	05.5	0.6	5.8	5.0	7.4	3.8	5.4	5.9	55	83	77	E 3	NE 1	SE 2	10	10●	10●		●⁰ a, p.
4	08.7	15.0	17.7	3.6	5.4	5.6	5.4	5.9	5.3	5.3	87	79	78	NW 3	NW 2	NW 2	10●	8●	8●	3.6	●⁰ n, a, p.
5	20.7	21.5	21.8	1.1	5.4	6.0	5.8	4.2	3.9	4.6	63	56	67	N 1	N 3	N 3	0	1	0	1.3	
6	21.5	21.2	19.6	1.1	5.8	7.2	7.6	3.8	4.0	4.8	55	52	61	NE 1	NNW 3	NNW 3	0	0	0		
7	16.3	15.2	14.0	3.6	6.2	9.4	13.6	5.2	5.6	4.4	74	63	38	NNW 3	N 2	E 3	0	2	1		
8	11.8	11.5	10.9	6.2	11.4	14.2	13.4	4.2	6.4	4.8	41	53	42	SE 3	SE 4	SE 3	3	1	7		
9	09.3	10.0	09.5	9.6	11.8	14.6	13.6	5.7	6.9	6.7	56	55	58	SE 4	SW 1	NW 1	5	3	7		
10	09.5	09.9	11.1	5.9	7.4	8.8	6.4	7.2	6.8	6.8	94	81	94	N 3	N 3	N 3	10	10	10●		●⁰ p.
11	13.9	13.3	10.7	5.9	9.6	13.2	14.0	6.8	6.3	5.6	76	55	47	S 2	ESE 2	ESE 2	10●	10●	10	0.4	●⁰ n, a.
12	04.1	05.6	09.3	9.2	9.4	8.4	9.2	6.3	7.5	7.5	71	92	87	E 1	S 4	SW 2	10	10●	10●	0.0	●⁰ a, p.
13	12.1	10.9	12.0	7.3	9.3	10.3	7.9	6.1	6.9	7.2	70	74	90	S 2	E 2	SW 3	10●	5	10●	3.1	●⁰ sch. n, ●⁰ a, ● sch. p.
14	16.4	17.7	19.0	6.5	7.8	8.6	7.2	6.6	6.7	6.3	83	81	83	SW 3	SW 4	SW 3	10●	10●	10●	6.0	●⁰ n, a, p.
15	20.7	21.6	20.4	5.4	7.6	9.8	8.6	6.7	6.9	7.2	86	76	87	SW 3	WSW 3	SW 2	10●	10	10	2.4	●⁰ n, ●⁰ sch. a, p.
16	17.8	17.0	17.0	4.3	8.8	11.6	11.4	6.2	6.1	6.2	73	59	61	N 1	N 2	N 2	10	10	10	0.5	●⁰ sch. n.
17	16.6	15.7	16.2	8.4	13.2	17.0	**18.8**	4.9	4.5	6.3	43	31	39	SE 3	E 4	E 3	10	10	10		
18	21.4	21.9	22.3	10.2	14.2	16.6	14.0	7.6	**9.0**	8.5	63	64	71	SW 1	SW 2	SW 1	10	7	8		
19	**22.8**	22.1	21.4	8.0	9.2	9.8	8.4	7.6	7.9	7.5	89	87	92	N 1	N 1	N 2	10≡	10●	9●		●⁰ mtg., p.
20	18.9	15.7	13.2	6.7	7.2	8.2	6.2	5.2	6.2	5.2	69	77	74	NW 2	W 3	NW 3	10	10	10	4.5	●⁰ n.
21	12.8	12.3	10.3	3.2	6.4	7.0	4.8	4.5	4.3	4.6	62	57	71	N 3	N 3	N 4	7	9	8		
22	05.9	05.7	06.2	2.2	4.4	6.8	6.8	4.6	3.8	3.4	74	52	46	NW 1	N 4	NE 3	7	7	7		
23	10.4	11.3	11.0	2.0	5.2	6.8	6.8	**3.2**	3.4	**3.2**	48	46	44	E 2	N 2	N 3	10	5	5		
24	11.4	12.0	12.2	2.8	5.6	6.4	6.4	3.7	3.7	3.7	55	51	51	N 3	NNW 3	N 4	10	10	0		
25	12.3	12.1	11.9	3.0	6.0	7.8	7.0	4.5	4.0	4.9	65	52	66	N 4	N 4	N 4	2	2	0		
26	11.5	10.6	09.2	4.4	6.4	9.0	8.0	4.9	5.0	6.2	68	58	78	N 3	N 3	N 4	0	0	10		
27	05.5	05.2	04.4	6.0	13.0	14.8	13.8	6.2	5.8	4.8	55	47	41	E 3	SE 3	SE 4	7	7	7		
28	01.3	00.7	00.8	10.9	13.9	13.2	13.6	6.1	6.5	6.5	52	57	56	SE 5	SE 5	SE 6	9	9	5		
29	03.7	05.8	02.6	12.9	14.4	16.0	18.6	7.0	7.4	8.0	57	55	51	E 4	E 3	E 6	5	7	10		
30	98.9	99.0	97.7	13.4	13.4	**18.8**	15.4	8.8	7.9	5.2	77	49	40	SE 2	SE 3	S 3	10●	8	7	0.6	●⁰ n.
31	98.7	**97.6**	99.0	9.9	10.4	11.2	10.4	8.2	7.7	8.0	88	78	85	0	N 3	N 3	10●	6	2	5.0	● n, ●⁰ a.
M.	11.8	11.8	11.6	5.6	8.4	10.1	9.8	5.6	5.8	5.7	67	63	64	2.4	2.8	2.9	7.4	6.6	6.8	27.4	

Juni.

Datum.	8	2	7	Min.	8	2	7	8	2	7	8	2	7	8	2	7	8	2	7	Niederschl.	Bemerkungen.
1	04.9	08.6	10.4	7.9	9.4	11.8	11.8	8.1	7.8	7.6	92	76	74	SW 2	SW 3	SW 2	10●	8	7	0.8	●⁰ n, a, ●⁰ sch. p.
2	11.8	12.2	11.5	6.4	11.7	11.4	11.2	6.9	7.8	7.2	68	78	73	W 1	NW 2	N 2	3	10	7	0.5	
3	11.3	12.3	13.6	9.3	11.0	10.5	10.2	9.0	8.1	7.8	93	87	84	0	NW 1	NW 2	10●	10●	9●	5.5	● n, a, ●⁰ sch. p.
4	18.8	21.7	22.9	8.4	9.4	11.0	10.2	6.3	6.0	6.0	71	61	65	NW 3	N 2	N 2	7	8	7	7.3	●⁰ sch. n.
5	22.5	22.0	21.5	**5.4**	10.4	15.8	13.4	6.1	6.9	6.7	65	52	59	E 1	SW 1	E 1	10	10	10		
6	20.2	19.6	18.7	10.4	12.5	14.8	12.0	8.4	8.8	9.4	78	70	91	E 2	E 2	NW 2	10	10	10●	0.2	●⁰ n, ●⁰ sch. a, p.
7	18.6	23.9	26.1	10.1	10.3	11.4	9.8	8.0	7.8	7.9	86	78	87	SW 4	W 4	W 3	10●	10●	10●	6.4	● sch. n, ●⁰ sch. a, p.
8	26.7	**26.9**	26.8	8.7	10.2	11.2	11.2	7.0	8.0	8.0	76	80	80	SW 3	SW 3	SW 3	10	10	10●	1.0	●⁰ n, p.
9	25.4	24.3	24.4	9.2	10.2	10.2	9.8	9.0	9.0	8.8	97	97	98	S 2	SW 2	SW 1	10●	10●	4●≡	15.5	● n, a, ≡ ●⁰ p.
10	25.7	24.6	21.9	8.7	10.4	14.6	**17.0**	8.7	9.9	**11.2**	93	81	78	S 1	SW 1	W 1	10	10	2	23.0	≡ ●⁰ n.
11	18.6	16.6	13.1	9.2	10.2	11.2	10.0	8.8	8.4	8.2	95	85	89	SW 2	SW 3	W 3	10≡	10●	10●		≡⁰ n, ●⁰ a, p.
12	07.8	07.3	06.0	7.4	8.6	11.6	9.8	7.3	7.6	7.3	88	75	82	W 3	SW 3	SW 3	10	10	9●	5.7	● sch. n, ●⁰ sch. p.
13	99.9	91.8	87.0	7.3	9.7	10.4	9.4	7.0	7.5	8.3	77	80	95	SE 4	SE 4	S 4	10	10●	10●	2.2	●⁰ n, a, ● p.
14	**86.7**	92.1	96.2	7.0	9.0	10.4	8.8	7.1	6.9	7.3	83	74	87	NW 4	N 2	N 2	8	7	10●	14.0	● sch. n, ●⁰ p.
15	03.6	02.6	99.3	7.2	8.2	10.0	8.4	5.3	6.6	7.2	65	72	88	SW 4	SW 3	S 3	6	10	10●	6.0	● n, ●⁰ p.
16	96.5	94.9	91.8	8.0	9.0	9.6	10.6	7.4	7.2	8.1	87	82	85	SW 4	S 3	S 2	10●	10●	10●	4.0	●⁰ sch. n, ●⁰ a, p.
17	90.6	92.0	91.0	7.2	8.2	8.0	8.6	7.4	6.9	7.9	92	86	95	NW 1	NW 4	NW 3	10●	10●	10●	11.1	●⁰ n, a, ● p.
18	96.9	00.6	02.7	7.4	11.4	12.6	11.0	8.3	8.8	8.3	83	82	85	NW 4	NW 4	N 4	6	5	3	14.4	●⁰ n.
19	07.8	09.2	09.0	7.4	8.4	10.0	8.6	6.2	6.8	7.0	76	74	84	NW 3	NNW 2	N 1	10	10	10		
20	06.1	05.5	04.3	7.4	8.8	10.4	12.6	6.4	7.3	8.6	76	76	80	N 1	NNW 3	N 3	8	7	7		
21	07.3	09.0	09.5	8.2	17.0	15.6	14.0	7.9	8.8	9.5	55	66	80	SE 1	N 2	N 2	3	1	2		
22	14.0	16.0	16.6	9.1	10.6	11.8	11.6	8.6	8.6	8.7	91	84	86	W 1	NW 2	NW 1	10≡	10	10		≡ n.
23	18.7	19.5	19.5	8.8	9.8	10.2	10.2	7.1	8.1	8.1	79	87	87	SW 2	NW 1	W 1	10	10●	10●		●⁰ a, p.
24	19.7	17.8	15.1	8.3	9.5	10.4	9.7	6.0	6.6	6.3	67	70	70	N 4	NW 4	W 2	0	0	8	0.7	●⁰ n.
25	06.9	04.6	02.7	7.0	8.0	9.4	9.6	6.2	5.8	**4.8**	78	66	54	W 3	NW 3	NW 4	10	10	10	2.0	● sch. n, p.
26	99.1	01.8	05.0	7.9	9.6	11.6	9.2	8.0	8.6	8.0	89	85	92	SW 4	SW 3	NW 2	10●	10●	10●	12.2	● n, ●⁰ a, p.
27	09.8	12.3	14.0	7.9	9.6	11.2	9.4	7.0	7.0	6.3	79	71	71	N 4	N 4	NNW 2	10	10	10	1.5	●⁰ n.
28	15.3	16.2	17.0	8.4	10.0	11.4	11.0	5.9	5.7	6.2	64	57	63	N 1	NNW 2	N 1	10	9	2		
29	19.5	20.4	21.2	9.8	11.0	12.6	12.2	6.6	6.9	6.9	68	63	65	E 1	N 1	N 1	10	9	0		
30	20.6	20.9	21.6	7.6	11.6	16.2	15.4	8.2	7.9	9.2	80	58	70	N 1	N 1	N 1	0	0	0		
M.	11.0	11.6	11.3	8.1	10.1	11.6	10.9	7.3	7.6	7.8	80	75	80	2.4	2.5	2.1	8.4	8.5	7.8	134.0	

H = 11 m, H_b = 16.4 m — $\varphi = 65^0\ 28'$ N

C_g = 1.75 mb bei 1009 mb — $\lambda = 12^0\ 13'$ E

Juli.

Datum.	Luftdruck. 900 oder 1000 + 8	2	7	Luft-Temperatur. Min.	8	2	7	Absolute Feuchtigkeit. 8	2	7	Relative Feuchtigk. 8	2	7	Richtung und Stärke des Windes. 8		2		7		Bewölkung. 8	2	7	Niederschl.	Bemerkungen.
1	21.3	19.9	18.6	10.5	14.0	18.6	18.4	9.2	9.9	10.3	78	62	65	N	1	N	2	N	2	0	1	7		
2	23.5	22.9	21.1	13.2	16.2	10.2	18.6	9.5	9.6	9.1	62	58	57	W	1	N	2	N	2	1	0	0		
3	20.7	19.7	18.0	14.7	21.4	21.8	20.4	8.2	9.1	11.7	43	47	66	E	1	N	2	N	2	0	0	0		
4	17.1	15.3	13.6	17.0	22.0	**26.6**	23.8	7.6	8.3	10.0	39	32	46	E	2	E	2	N	1	8	1	0		
5	12.2	10.9	11.0	17.0	22.0	25.0	20.6	10.2	11.1	13.1	52	47	73	E	2	S	1	SW	1	8	5	3		⊙⁰ sch. p.
6	10.7	09.0	07.1	13.2	13.6	14.6	14.5	11.1	11.5	11.6	96	93	94	NNW	2	N	2	N	1	10•	10•	9	3.8	⊙⁰ n, a, p.
7	05.6	09.5	09.2	13.5	15.6	15.2	16.5	12.3	10.6	10.9	93	83	78	S	3	S	3	W	2	10•	9•	2	4.7	⊙ sch. n, mg., a, ●⁰ sch. p.
8	05.2	03.6	06.7	12.5	14.0	19.2	13.8	11.1	12.5	10.9	94	75	94	N	2	E	2	SW	2	5	10•	10•	4.2	⊙⁰ a, ⊙ p.
9	09.2	07.6	08.2	10.2	11.2	12.8	11.8	9.2	9.0	8.8	93	82	86	NE	1	NW	1	N	1	10•	10•	10•	17.0	⊙ n, ⊙⁰ a, p.
10	05.4	03.3	01.8	10.2	11.2	11.2	11.2	9.2	8.7	8.4	93	88	85	N	1	N	4	NW	3	10•	10	10•	2.8	⊙⁰ n, a, p.
11	06.7	10.1	11.6	9.7	10.4	12.6	14.6	8.4	8.3	9.4	91	77	76	NW	4	W	3	NW	2	10	10	9	8.3	⊙⁰ n, a, p.
12	15.3	16.6	18.4	10.2	11.2	12.6	12.4	8.7	10.6	10.6	88	98	99	SW	3	SW	2	SW	1	10•	10•≡	10•≡	7.5	⊙ n, ≡⁰, ⊙⁰ a, ≡ ⊙⁰ p.
13	23.2	25.4	**26.2**	10.4	12.4	14.2	13.6	9.2	7.9	8.7	87	65	75	SW	2	SW	1	SW	1	10≡	10≡	10	14.5	≡ ● n, ≡⁰, ●⁰ a.
14	23.9	21.5	19.4	**7.9**	14.0	18.2	17.4	8.2	9.9	9.8	69	63	67	E	2	N	2	N	1	8	1	2	0.0	
15	16.6	15.2	14.1	13.7	19.6	22.6	21.4	9.9	11.6	11.0	58	57	59	E	2	NW	1	N	1	5	5	7	0.5	⊙⁰ sch. n.
16	16.0	15.6	15.4	14.6	15.6	18.8	17.2	11.8	12.4	11.6	89	77	80		0	N	1	NNW	3	10≡	7	7	3.8	⊙ sch. n.
17	11.4	10.2	13.2	14.4	20.4	24.8	17.2	9.4	10.3	12.2	53	45	84	SE	3	SE	3	W	2	10	10	9•		⊼ u. ⊙ p.
18	11.1	10.6	10.4	13.7	16.0	22.6	23.2	11.8	11.6	**14.8**	87	57	70	N	3	N	1		0	10	9	9	6.4	⊙⁰ n.
19	14.6	15.9	17.2	15.8	16.8	20.8	17.6	11.9	12.7	12.0	83	70	80		0	NW	2	NNW	2	5	8	7		
20	18.7	20.3	20.7	15.0	19.2	22.6	21.4	12.5	12.9	10.8	75	63	57		0	SW	1	N	1	8	10	10		
21	22.5	22.2	20.3	17.2	20.4	20.2	20.8	11.7	13.1	13.3	66	74	73	SE	1	N	1	N	2	7	10	10		
22	21.4	20.9	20.2	17.9	21.6	23.4	22.4	12.5	11.1	11.7	66	52	58	S	3	NW	1	SW	3	7	9	7		
23	16.2	17.2	16.2	15.8	17.8	17.4	16.2	13.3	13.0	12.8	88	88	94	N	1	SW	2	SW	2	7	10•	10•		● a, ●⁰ p.
24	17.6	19.4	20.3	13.0	13.4	16.2	15.0	7.3	7.9	8.1	64	58	64	W	3	W	3	NW	3	5	5	7	6.6	⊙⁰ n.
25	20.6	16.9	12.6	10.2	12.6	15.4	16.6	**6.9**	7.9	9.8	63	60	69	N	1	N	5	N	3	3	3	10		
26	08.6	07.5	05.1	12.6	21.8	25.6	23.4	11.5	10.7	14.5	59	44	68	E	3	SE	2	S	1	2	2	9•		⊼ u. ⊙⁰ abd.
27	02.3	01.2	00.6	21.8	22.4	24.0	20.4	11.4	12.0	14.5	56	54	82	SE	3	SE	4	E	2	9	10	8•	0.0	⊼ u. ⊙⁰ n, ● sch. p.
28	99.6	99.3	98.2	15.0	16.0	16.7	15.6	12.1	12.4	11.5	89	88	87	NNW	4	N	3	N	3	10	10	7	0.8	⊙⁰ sch. u. ≡⁰ n, ⊙⁰ sch. a, p.
29	98.2	99.0	98.4	13.6	14.4	16.4	15.8	11.1	12.4	12.2	92	89	91	N	3	N	2	NNW	2	10•	10•	10•	5.4	⊙ sch. n, mg., ●⁰ a, p.
30	97.9	97.7	**96.7**	14.2	16.0	19.0	19.0	11.2	9.1	9.1	83	56	56	SE	3	E	2	E	2	7•	5	9	11.3	⊙ sch. n, ⊙⁰ sch. a, p.
31	98.5	97.8	97.3	13.9	15.4	17.2	17.2	11.8	11.9	11.9	90	82	82	NE	1	N	3	N	1	5	7	10•	0.2	●⁰ sch. n, ⊼⁰ u. ⊙⁰ p.
M.	12.6	12.3	11.9	13.6	16.4	18.9	17.7	10.3	10.6	11.1	75	67	75		2.0		2.1		1.8	7.1	7.0	7.4	97.8	

August.

Datum.	Luftdruck. 900 oder 1000 + 8	2	7	Luft-Temperatur. Min.	8	2	7	Absolute Feuchtigkeit. 8	2	7	Relative Feuchtigk. 8	2	7	Richtung und Stärke des Windes. 8		2		7		Bewölkung. 8	2	7	Niederschl.	Bemerkungen.
1	95.2	95.1	95.6	14.0	16.0	17.4	17.6	11.8	11.5	**12.3**	87	78	82		0	N	2	N	1	7	8	7	2.5	●⁰ sch. n.
2	96.8	98.1	98.4	14.7	15.2	16.8	17.2	11.7	11.9	11.9	91	83	82	SW	2	SW	1	N	1	10•	9	2	1.0	⊙⁰ n, a, ⊙⁰ sch. p.
3	01.1	02.2	01.7	14.8	18.0	19.8	18.5	10.3	10.3	12.0	67	60	76	E	3	N	2	N	3	7	3	7	0.2	⊙⁰ sch. n.
4	02.2	03.0	02.7	14.0	15.0	15.2	13.8	11.0	10.1	9.1	87	79	78	SW	2	N	1	N	2	10	9	10		⊙⁰ sch. a.
5	02.4	02.5	02.3	12.8	14.3	15.2	14.7	10.1	09.6	9.9	84	74	80	NNE	2	N	2	N	3	10	7	5	0.5	
6	03.4	04.9	06.1	13.0	13.5	15.2	15.2	10.6	10.6	10.6	93	83	83	N	3	NNW	3	N	3	10	10	10		
7	08.8	11.0	11.8	11.9	13.6	16.2	15.8	10.3	10.0	10.0	89	73	75		0	W	2	NW	1	10	7	5		
8	14.5	15.0	14.6	12.8	13.5	14.6	14.3	9.8	09.1	9.7	86	74	81	W	1	NNW	2	N	3	10	7	5		
9	12.0	12.9	12.4	10.9	13.8	18.8	17.2	10.4	11.5	10.8	90	71	74	NW	2	SW	1	SW	1	7	8	8		
10	06.0	05.6	03.6	12.9	18.4	18.4	15.9	10.1	11.5	12.1	63	73	90	SE	4	N	1	SW	2	9	5	10•		● p.
11	03.2	00.4	00.9	12.0	15.4	17.3	17.5	11.0	10.7	10.6	85	73	71	N	1	N	2	SW	3	9	8	8	11.2	⊙ n.
12	06.3	12.0	15.1	12.4	13.4	14.2	14.2	10.4	10.2	10.2	91	85	85	SW	4	SW	3	SW	3	10•	10•	10	2.8	⊙ sch. n, a, ⊙⁰ sch. p.
13	10.4	09.1	08.9	11.2	16.2	17.4	14.8	9.2	9.3	11.1	67	63	89	SE	3	SE	3	SW	1	10	10•	10•	4.5	⊙⁰ sch. n, ●⁰ a, p.
14	08.3	09.4	07.5	12.2	13.4	12.2	12.0	9.4	8.2	7.0	82	78	67	SW	3	S	3	S	1	10	10	10•	5.0	⊙ sch. n, a, p.
15	07.4	07.0	08.4	**9.2**	10.4	12.5	12.5	8.9	8.9	9.6	95	83	90		0	NW	3	NW	3	10•	7	10	7.2	● n, a.
16	10.5	10.9	10.4	10.4	11.4	11.6	11.6	9.6	9.4	8.7	96	94	86	NW	3	NW	3	NW	3	10•≡	10•≡	10	21.3	≡ ⊙⁰ n, a, ●⁰ p.
17	05.9	05.0	04.6	10.4	11.6	13.0	12.6	9.9	9.8	10.1	98	89	93	N	1	N	3	NNW	3	10•	10•	10	7.5	● n, ●⁰ a, p.
18	01.6	01.3	01.9	11.2	13.2	13.8	12.8	10.2	10.2	10.0	91	87	91	NNE	4	N	4	N	3	9	10	10	1.3	⊙⁰ sch. n.
19	04.6	05.5	05.7	11.6	12.8	13.2	13.0	10.6	10.5	10.6	97	94	96	SW	2	SW	3	SW	1	10•	10•	10•	0.5	●⁰ n, a, p.
20	06.3	07.1	06.7	11.4	12.8	14.4	14.6	10.6	10.6	10.7	97	87	87	N	1	N	2	N	1	10	10	9	7.6	●⁰ n.
21	07.6	07.4	08.1	11.9	13.4	17.2	17.7	7.8	8.3	9.1	69	57	61	SE	3	SE	2	SE	1	7	6	3		
22	11.2	13.0	13.5	13.4	15.4	18.3	18.0	9.2	9.6	8.9	70	61	58	E	3	SE	2	SE	2	7	7	3		
23	15.1	15.0	15.0	13.5	16.8	20.6	19.7	9.7	9.3	9.3	68	51	54	E	3	E	2	E	3	3	0	2		
24	15.0	14.8	14.3	15.2	18.0	**21.0**	20.4	9.8	9.0	8.6	63	49	48	SE	3	SE	3	SE	3	2	5	1		
25	14.2	13.7	13.8	14.0	16.0	20.4	20.0	8.8	8.6	8.0	64	48	46	E	3	SE	4	E	3	0	0	2		
26	**15.9**	15.5	15.2	14.0	16.4	20.4	19.4	8.3	8.0	7.5	60	45	45	E	3	SE	3	E	3	5	0	0		
27	14.3	14.4	13.3	14.2	16.2	19.2	18.8	6.0	6.3	**6.1**	49	39	37	SE	3	S	2	SE	3	2	3	3		
28	08.7	08.7	09.4	14.5	16.0	18.2	13.0	6.5	6.7	10.3	48	43	89	SE	4	SE	3	SW	1	7	9	10•		● sch. p.
29	99.3	97.0	96.3	12.6	14.6	15.0	11.0	7.4	8.4	9.0	59	66	93	SE	4	S	3	S	2	9	10•	10•	2.4	●⁰ sch. n, ●⁰ a, p.
30	97.0	98.7	00.8	9.6	12.6	15.6	12.5	8.8	8.3	9.8	82	62	91	E	1	E	1	SW	1	3	8	9•	7.0	●⁰ n, ● sch. p.
31	02.4	96.7	**93.5**	10.4	11.2	10.4	10.6	7.5	8.0	8.1	75	85	85	SW	2	S	3	SW	4	8	10•	9•	7.3	● sch. n, a, p.
M.	06.7	06.9	06.9	12.5	14.5	16.2	15.4	9.6	9.5	9.7	79	71	76		2.4		2.4		2.2	7.8	7.3	7.0	89.8	

$H = 11\,m$, $H_b = 16.4\,m$ — $\varphi = 65^0\ 28'$ N

$C_g = 1.75\,mb$ bei $1009\,mb$ — **September.** — $\lambda = 12^0\ 13'$ E

Datum.	Luftdruck. 900 oder 1000 + 8	2	7	Luft-Temperatur. Min.	8	2	7	Absolute Feuchtigkeit. 8	2	7	Relative Feuchtigk. 8	2	7	Richtung und Stärke des Windes. 8	2	7	Bewölkung. 8	2	7	Niederschl.	Bemerkungen.
1	85.4	84.7	84.1	8.4	9.0	11.0	10.4	7.2	7.6	6.7	84	77	72	S 4	SW 3	SSW 3	10●	10●	10●	10.4	⊗ sch. n, a, p.
2	81.7	82.0	82.5	7.7	9.0	12.6	11.8	6.7	6.4	7.6	78	59	74	E 1	N 2	NW 3	7	5	10	4.6	⊗ sch. n.
3	79.9	78.5	**76.5**	8.9	11.4	10.8	10.2	8.1	8.7	8.8	81	90	95	W 4	SW 4	SW 3	9●	10●	10●	14.2	⊗ n, a, p.
4	79.6	83.1	85.5	9.2	11.2	12.8	12.8	7.5	6.1	6.8	75	55	61	SE 2	SE 3	E 3	9	7	5	27.0	⊗⁰ n.
5	90.7	91.1	90.8	8.4	11.6	13.0	12.0	5.6	8.3	**8.9**	55	75	86	E 1	NNW 2	NW 3	6	10	10		
6	91.6	94.8	96.3	9.4	9.8	13.4	12.6	8.1	7.1	8.1	89	62	75	E 1	E 1	NNE 1	10	10	8		
7	00.4	01.8	02.1	9.6	13.2	13.8	13.0	7.2	7.8	7.6	64	67	68	E 3	NNW 2	NNW 2	2	2	1		
8	03.4	03.9	04.6	9.2	10.4	14.8	12.2	8.7	8.3	8.6	93	66	82	NE 1	NW 2	NW 1	3	7	4		
9	06.6	07.9	08.3	7.7	11.0	16.0	13.6	8.1	7.4	6.3	83	55	54	0	E 1	E 3	10	7	7		
10	09.6	10.9	11.5	9.3	11.0	16.0	12.8	7.4	6.8	8.2	75	50	75	E 2	S 2	NE 1	7	5	5		
11	14.3	15.5	15.5	9.4	11.8	15.4	13.0	6.9	6.1	7.1	67	47	64	E 3	SW 1	N 1	7	8	7		
12	15.8	13.9	16.8	7.4	9.4	11.5	10.6	8.3	7.8	7.2	95	77	74	E 1	NW 3	SW 2	4	7	9		⊗ sch. a, ⊗⁰ sch. p.
13	18.0	18.9	18.4	9.2	9.4	10.8	10.4	8.2	8.2	8.4	93	85	91	SW 3	SW 3	SW 4	10●	10●	10●	18.2	⊗⁰ n, a, p.
14	14.5	13.7	10.5	9.2	11.2	10.2	10.6	8.0	8.4	8.3	80	91	89	S 5	SW 4	SW 4	10●	10●	10●	2.8	⊗⁰ n, a, p.
15	13.9	17.7	**19.1**	9.4	11.0	10.8	10.8	8.6	8.4	8.2	87	89	85	W 4	NW 3	W 2	10●	10●	9	7.8	⊗⁰ n, a, p.
16	19.0	17.9	16.4	8.2	9.4	11.8	11.0	7.9	7.6	8.3	89	74	85	E 1	NW 3	NNE 2	7	3	1	2.5	⊗⁰ n.
17	14.9	14.4	14.0	6.6	10.6	**16.8**	15.2	7.4	7.8	6.3	77	55	49	E 2	SE 3	SE 5	1	0	0		
18	13.7	13.2	11.1	10.6	13.4	14.3	12.4	7.6	6.2	5.8	66	51	54	SE 4	SE 5	ESE 5	5	1	0		
19	08.8	09.5	09.5	9.7	10.0	11.0	9.2	5.5	**5.3**	5.9	60	54	68	ESE 6	SE 4	SE 3	7	8	10●		⊗⁰ p.
20	07.6	04.5	00.0	6.5	9.0	12.4	12.0	6.1	5.8	5.8	71	54	56	E 3	SE 5	SE 6	5	7	10●	0.2	⊗⁰ n, abd.
21	97.1	97.0	94.1	6.8	12.3	12.5	12.7	6.4	6.0	7.3	60	56	67	SE 5	SE 3	SE 5	7	10	10●	1.0	⊗⁰ n. a, p.
22	82.8	86.5	89.5	11.4	12.4	9.8	9.8	7.5	6.9	7.9	70	76	87	SSE 5	S 5	S 5	10●	10●	10●	3.2	⊗⁰ n, a, ⊗ p.
23	93.6	90.8	85.9	8.6	10.4	13.0	10.6	6.1	5.5	6.6	65	49	70	SE 4	SE 6	ESE 6	3	9	10	12.7	⊗ sch. n, ⊗⁰ sch. p.
24	89.1	94.5	97.5	10.2	11.2	12.2	10.8	8.4	8.1	8.7	85	76	90	S 4	SW 3	SW 2	10	10	10●	3.8	⊗ sch. n, ⊗⁰ sch. a, p.
25	02.3	03.8	03.3	9.1	10.6	10.8	10.0	6.6	8.4	8.0	70	89	87	SE 2	S 3	SE 3	10	7●	10●	1.2	⊗⁰ sch. n, a, p.
26	05.4	06.6	06.4	8.5	9.0	11.2	9.3	7.8	8.4	7.6	92	85	88	SE 2	W 1	S 1	10●	7●	9	16.2	⊗ n, ⊗⁰ sch. a, p.
27	08.3	10.9	13.1	6.5	7.9	10.2	8.6	7.4	7.6	7.9	93	82	95	S 1	S 2	SW 2	10●	10●	10●	13.5	⊗ n, a, p.
28	18.1	17.0	12.3	6.4	7.8	10.3	9.5	7.0	5.8	5.4	89	63	61	SE 3	S 3	SE 4	7●	5	10	19.0	⊗ sch. n, ⊗⁰ sch. a.
29	97.9	02.2	04.1	6.3	10.3	10.5	9.2	8.5	7.4	7.6	92	79	89	S 6	SW 4	S 4	10●	9●	10●	8.6	⊗ n, ⊗⁰ sch. a, p.
30	12.0	14.1	13.4	**2.8**	9.5	10.4	9.8	7.3	7.3	7.2	83	76	80	SW 4	SW 4	SW 4	10●	10●	10●	10.8	⊗ sch. n, ⊗⁰ sch. a, p.
M.	02.5	03.4	03.1	8.4	10.5	12.3	11.2	7.4	7.2	7.4	79	69	76	2.9	3.0	3.1	7.5	7.5	7.8	177.7	

Oktober.

Datum.	Luftdruck. 900 oder 1000 + 8	2	7	Luft-Temperatur. Min.	8	2	7	Absolute Feuchtigkeit. 8	2	7	Relative Feuchtigk. 8	2	7	Richtung und Stärke des Windes. 8	2	7	Bewölkung. 8	2	7	Niederschl.	Bemerkungen.
1	04.6	04.0	05.0	8.2	8.2	8.2	9.0	7.0	6.7	6.6	87	82	77	W 7	W 6	WSW 7	10●	10●	10●	17.6	⊗ n, a, ⊗⁰ sch. p.
2	04.0	07.2	06.6	6.5	9.5	9.5	8.3	5.1	6.2	6.1	57	70	74	W 2	W 3	W 5	10●	9	9●	10.0	⊗ sch. n, ⊗⁰ sch. a, p.
3	91.5	92.2	93.0	5.0	7.0	5.0	3.0	6.4	5.2	4.1	85	80	72	WNW 7	NW 8	W 8	9●	9●△	9●✱	10.5	⊗ sch. n, ⊗ u. △ sch. a, p.
4	02.1	03.7	97.2	-0.6	4.4	5.6	6.0	3.9	4.9	5.3	62	73	76	NW 6	SW 3	WSW 6	7	7✱	10●△	8.2	⊗ ✱ sch. n, ✱⁰ sch. a, △ u. ⊗⁰ sch. p.
5	04.3	10.6	12.9	-0.8	4.4	5.0	3.8	5.0	5.1	5.2	80	78	87	NW 6	NW 4	NW 5	8●	10●△	6△	8.0	⊗ u. △ sch. n, a, △⁰ sch. p.
6	04.7	97.7	91.7	2.0	2.0	4.0	1.2	4.9	4.1	4.7	93	67	92	SW 1	E 3	NE 4	10●	10	10●✱	4.6	⊗⁰ n, a, ⊗ ✱ p.
7	03.2	07.4	09.6	0.9	4.4	5.4	3.6	4.8	5.0	5.1	77	75	87	NE 2	NW 1	0	5	7●△	7●	5.3	⊗ ✱ n, △⁰ u. ⊗⁰ sch. a, ⊗⁰ sch. p.
8	15.4	15.1	10.6	1.3	1.8	5.3	5.6	4.9	4.9	4.9	93	74	73	SE 1	W 4	SW 4	10●	10△	10△	7.5	⊗ n, △⁰ sch. a, p.
9	95.2	93.6	93.4	1.8	8.6	8.6	6.0	**7.4**	7.2	5.4	89	87	78	W 6	W 7	NW 8	10●	10●△	9●✱	28.1	⊗ n, ⊗⁰ u. △⁰ a, ⊗ ✱ sch. p.
10	99.2	02.6	02.3	-0.3	3.2	2.6	4.2	4.0	4.4	3.3	69	79	54	NW 6	N 6	NW 5	9✱	8△✱	8✱	6.2	✱ sch. n, a, p.
11	01.6	01.4	00.4	-0.1	3.4	3.2	3.2	3.5	3.6	3.2	60	63	55	NW 5	NW 3	NW 3	9✱	8△✱	7	6.0	✱ sch. n, ✱ u. △ sch. a, p.
12	97.0	96.8	96.3	0.2	1.7	2.2	0.5	4.7	4.4	3.8	91	82	80	NNW 3	SW 1	SW 1	10✱	10✱	10✱	6.4	✱ n, a, p.
13	94.5	97.3	99.5	-2.0	-1.0	0.3	-0.4	3.1	3.0	2.8	73	64	62	E 2	E 3	NE 2	7	1	0	7.6	✱ n.
14	03.6	04.8	04.1	-1.5	-0.5	1.0	-0.4	2.7	3.1	3.0	60	62	66	E 2	E 2	E 2	3	5	7		
15	02.8	02.9	03.1	-3.2	-3.2	0.0	-2.4	**2.3**	2.9	2.9	64	63	75	E 2	S 1	E 1	0	1	7		
16	02.5	03.8	04.6	**-4.9**	-4.4	0.0	-2.0	2.5	2.7	2.8	76	59	71	E 1	E 1	E 1	0	0	3		
17	06.6	08.0	07.8	-4.4	-3.6	0.2	-1.2	2.6	3.1	3.1	72	65	73	E 1	E 3	E 2	0	7	3		
18	07.7	09.5	09.6	-4.7	-3.4	1.3	-0.5	2.7	3.4	2.7	75	68	60	E 1	E 1	E 2	0	1	7		
19	09.8	10.6	09.6	-3.4	-0.2	2.0	1.2	3.8	4.0	4.5	83	75	89	E 1	SSW 2	SSW 3	10✱	9	10✱	1.5	✱⁰ n, ✱⁰ sch. a, p.
20	03.4	04.3	05.4	-0.2	1.8	2.2	3.4	4.7	4.2	3.5	89	79	60	W 3	W 3	NW 3	10●✱	10△	5	8.6	✱ ⊗ n, △ sch. a, ✱⁰ sch. p.
21	05.9	06.6	05.1	0.2	1.4	2.8	1.8	3.8	4.3	3.3	74	76	63	SE 1	SE 2	E 2	10△	0	0	2.3	⊗ ✱ sch. n, △⁰ sch. a.
22	99.6	98.1	96.3	1.4	3.0	3.8	3.8	2.8	3.5	3.9	49	57	64	E 4	E 5	SE 5	5	8	8	0.0	
23	91.5	90.5	89.1	2.0	4.7	5.8	6.0	4.1	4.0	4.3	64	58	62	SE 6	SE 7	SE 8	3	1	3		
24	**87.2**	88.8	87.4	4.7	7.8	8.2	8.6	4.9	4.8	5.0	61	60	60	SE 6	SE 4	SE 4	8	10	10	0.0	⊗⁰ sch. n.
25	89.0	90.5	92.6	7.4	9.2	**10.7**	10.0	5.5	5.9	5.7	63	62	62	E 3	SE 3	SE 2	9	6	9		
26	95.3	99.0	00.6	8.2	8.2	8.6	7.2	5.9	6.7	6.5	73	81	86	E 2	S 1	SE 2	10	10	9		⊗⁰ sch. p.
27	00.3	99.6	99.2	5.0	7.6	9.3	8.8	5.4	6.0	6.2	69	69	73	E 1	SE 4	SE 4	2	10●	7	0.5	⊗⁰ mtg., ⊗⁰ sch. p.
28	92.0	92.6	93.3	7.2	8.6	9.2	7.8	5.7	6.5	6.4	68	75	81	E 5	E 2	E 2	5	3	5	0.0	
29	98.9	02.4	03.6	3.6	7.6	7.4	6.8	6.7	6.8	6.8	86	89	93	SSE 3	S 2	0	10	10●	10●		⊗⁰ a, p.
30	08.7	14.5	17.7	3.7	3.8	3.4	-0.2	5.6	4.1	3.3	93	70	71	SE 3	E 3	E 1	10●	8	0	1.0	⊗⁰ n, ⊗⁰ sch. a.
31	25.6	29.2	**29.4**	-2.5	-2.0	0.6	-1.2	2.8	2.7	2.4	71	57	56	NE 1	E 2	N 1	0	0	0	0.0	
M.	01.5	02.8	02.5	1.3	3.4	4.6	3.6	4.5	4.6	4.4	74	71	72	3.2	3.2	3.3	6.7	6.7	6.7	139.9	

$H = 11$ m, $H_b = 16.4$ m — $\varphi = 65^0\ 28'$ N

$C_g = 1.75$ mb bei 1009 mb — $\lambda = 12^0\ 13'$ E

November.

Datum.	Luftdruck. 900 oder 1000 + 8	2	7	Luft-Temperatur. Min.	8	2	7	Absolute Feuchtigkeit. 8	2	7	Relative Feuchtigk. 8	2	7	Richtung und Stärke des Windes. 8		2		7		Bewölkung. 8	2	7	Niederschl.	Bemerkungen.
1	29.4	**31.1**	29.6	-3.0	0.0	0.0	-1.4	2.4	2.4	2.1	51	51	51	E	4	E	5	E	4	2	1	1		
2	22.3	20.2	18.0	-2.5	0.0	0.8	0.0	2.4	2.9	3.2	51	59	69	E	4	SE	4	SE	3	10	10	10		
3	11.9	09.7	07.0	-1.4	-1.4	0.0	-1.6	3.2	3.0	3.3	77	65	81	E	3	E	3	E	3	7	5	1		
4	99.6	98.8	98.7	-2.5	0.0	1.0	-2.4	3.7	3.6	3.3	79	73	84	SE	2	E	2	NE	1	10	8	0		
5	92.8	92.9	92.2	-2.5	1.7	0.3	-1.3	4.5	4.4	3.5	87	94	83	S	1	NE	1	E	2	10*	10*	1	1.5	✱ sch. n, ✱ a, p.
6	93.8	98.8	00.2	-3.5	-3.0	-1.5	-2.6	3.1	2.7	3.0	83	66	79	E	1	E	3	E	2	3	3	0	1.8	
7	00.0	01.0	01.3	-4.9	-4.2	-1.8	-4.4	2.6	2.9	2.5	76	72	76	E	2	E	1	E	2	0	0	0		
8	00.6	01.9	01.6	-7.7	-6.4	-3.2	-5.5	2.2	2.7	2.5	77	73	82	E	2	E	1	SE	1	0	6	10	•	
9	01.5	01.4	02.1	-6.4	-5.6	-4.4	-5.0	1.6	2.0	2.2	52	61	69	E	2	E	3	E	3	0	1	0		
10	06.6	09.3	10.3	-6.4	-4.4	-1.7	-0.6	1.7	3.0	3.8	51	74	87	E	3	SE	1	SSE	3	9	8	10		
11	14.4	16.1	17.3	-3.2	-2.2	1.8	3.2	3.5	4.3	4.4	89	82	76	E	1	SW	2	W	4	10*	10*	10●	3.5	✱ n, ✱⁰ sch. a, ●⁰ sch. p.
12	13.0	10.9	13.8	-2.2	5.2	6.4	7.0	6.2	6.8	6.8	94	94	91	SW	5	SW	5	SW	6	10●	10●	10●	3.2	◍ n, a, p.
13	16.9	18.1	17.7	4.8	6.0	5.7	5.4	6.6	6.5	5.9	94	96	87	SW	6	SW	4	SSW	3	10●	10●	10●	25.8	◍⁰ n, a, p.
14	12.4	11.6	11.1	3.6	4.0	4.4	4.2	5.7	4.8	4.8	93	77	77	E	1	S	1	S	2	10	9	10●	4.7	◍⁰ n.
15	13.7	16.1	16.5	2.7	4.2	4.8	5.0	6.0	6.0	6.1	97	94	94	SE	1	SW	3	SW	3	10●	10●	10●	0.5	◍⁰ n, a, p.
16	13.6	12.6	12.8	2.5	3.0	4.2	3.0	5.5	4.6	5.1	96	74	90	SW	2	SE	2	S	2	2	10	10●	2.8	◍⁰ n, p.
17	21.1	24.6	25.4	1.4	3.2	4.0	3.8	5.0	4.7	5.6	87	77	93	W	3	W	4	SW	3	7	10	10●	4.8	● n, ◍⁰ p.
18	20.3	18.1	16.3	2.8	7.0	6.8	7.2	7.0	6.7	**7.4**	94	91	98	SW	6	SW	6	SW	7	10●	10●	10●	7.4	● n, ◍⁰ a, ◍ p.
19	01.7	00.5	01.0	2.9	**7.6**	**7.6**	7.2	7.3	7.1	6.3	94	91	83	SW	8	WSW	8	W	6	10●	10●	10	30.2	◍ n, a, ●⁰ p.
20	00.3	08.8	10.4	3.5	5.0	3.8	2.5	5.2	4.2	4.1	80	70	74	NW	4	NW	5	NW	5	10●	10	9	4.7	◍⁰ sch. n, a, ● ✱ sch. p.
21	05.5	05.3	05.3	-0.6	1.4	2.5	-0.2	4.3	3.9	4.2	85	70	91	NW	3	NW	6	E	1	10*	9	7	3.7	✱ sch. n, a, p.
22	07.9	05.2	98.9	-3.6	-2.0	-2.2	-2.2	3.5	2.8	2.8	87	71	71	E	3	E	2	E	4	8	9	10	3.3	
23	01.2	02.1	01.0	-6.4	-5.8	-2.0	-2.0	2.2	3.6	3.6	73	89	89	E	2		0	N	3	0	10*	10		✱ a, p.
24	**89.7**	89.8	90.9	-6.1	-3.6	-0.8	-2.3	3.1	3.0	3.5	87	69	89	NW	6	NW	6	NE	3	10*	10△	10*	7.0	✱ n, ✱⁰ a, p.
25	96.4	00.2	02.9	-3.6	-2.4	-1.6	-2.2	3.4	3.7	3.6	89	90	91	NE	2	N	4	E	2	10*	10*	10*	12.1	✱ n, a, p.
26	01.7	97.7	92.5	-3.7	-3.2	-2.0	-1.8	3.3	3.6	3.1	90	89	76		0	SE	3	SE	4	10	10*	10	8.3	✱ n, a, ✱⁰ sch. p.
27	97.0	99.4	99.9	-4.3	-3.0	-3.6	-5.3	1.9	2.4	2.6	50	68	82	E	4	E	4	E	8	7	10	10*	1.5	✱ sch. n, ✱⁰ abd.
28	04.4	09.6	10.0	-5.3	-3.2	-3.6	-6.0	1.8	2.2	1.7	50	63	56	E	8	E	2	E	2	10	10	10	1.0	✱ sch. n.
29	07.6	07.8	07.2	-7.5	-6.5	-7.4	-8.4	1.3	1.5	1.7	46	58	67	E	2	E	3	E	2	10	10	0		
30	08.7	09.1	07.6	**-10.5**	-10.0	-9.4	-7.6	**1.2**	1.3	1.6	56	58	60	E	3	E	2	E	2	0	10	10		
M.	06.9	07.6	07.3	-2.5	-0.6	0.3	-0.5	3.7	3.8	3.8	77	75	80		3.1		3.2		3.2	7.2	8.3	7.3	127.8	

December.

Datum.	8	2	7	Min.	8	2	7	8	2	7	8	2	7	8		2		7		8	2	7	Niederschl.	Bemerkungen.
1	00.5	00.9	04.3	-10.3	-2.4	-2.7	-3.8	3.4	3.4	2.5	89	91	72	S	3	SE	2	E	2	10*	10*	0	3.5	✱ n, a, p.
2	07.5	10.1	12.0	-7.6	-4.6	-3.6	-5.2	2.8	3.1	2.8	86	87	90	E	1	E	2	NE	1	7	9*	10	2.5	✱ sch. a, p.
3	18.8	**20.9**	19.0	-6.7	-5.0	-3.2	-2.4	1.6	2.3	2.7	49	64	70	E	2	SE	2	SE	3	10	7	10	0.8	✱ sch. n.
4	12.7	14.2	15.0	-5.3	5.0	4.0	3.8	5.3	4.1	3.9	81	67	64	W	3	NW	3	NW	5	10	10≡	10		
5	17.4	14.3	07.4	2.4	3.4	1.8	3.5	4.5	4.5	5.4	76	85	92	W	3	SW	3	SSW	4	7	10	10●	2.2	● ✱ sch. n, ◍⁰ p.
6	74.9	89.1	02.3	1.2	4.2	4.0	4.8	**5.8**	5.5	5.2	93	90	81	SSW	8	N	6	N	4	10●✱	7	10	14.3	◍ u. ◍ ✱ n, a.
7	09.3	08.1	05.9	2.0	3.0	2.0	5.4	4.9	4.4	5.3	87	82	78	S	4	S	4	S	3	10	10●✱	10	2.0	◍ ✱ a, ●⁰ p.
8	01.2	00.3	99.8	1.9	5.4	5.8	5.2	5.5	5.2	4.6	82	76	69		0		0	SE	1	8	10	10	1.5	
9	98.0	97.3	95.2	5.5	6.0	**6.4**	6.0	4.5	5.1	3.7	65	71	53	SE	2	E	2	E	3	10	10	2		
10	95.1	95.8	94.7	1.6	2.4	2.0	1.4	4.9	4.4	3.8	89	82	74	SE	3	E	2	E	2	10	10*	10		✱⁰ a, ✱ sch. p.
11	94.0	95.8	96.4	-0.7	0.8	0.0	-1.2	3.6	4.1	3.6	73	89	86	E	3	NNE	2	NE	1	10	10≡	10	1.0	
12	96.8	97.0	96.7	-2.0	-1.6	-4.2	-4.2	3.3	2.4	2.6	81	71	76	NE	3	NE	2	E	3	10	7	10		
13	00.2	05.0	08.1	-5.6	-3.6	-3.8	-3.8	2.1	2.0	2.3	58	57	67	E	3	E	3	E	3	10	10	10		
14	14.5	17.0	18.8	-7.5	-7.5	-8.6	-8.6	1.0	1.3	1.3	36	54	54	E	2	E	3	E	3	0	1	0		
15	20.8	19.2	15.9	-10.4	-9.4	-9.0	-9.0	1.0	1.2	1.1	45	53	46	E	1	E	2	E	2	0	1	8		
16	99.5	01.8	99.8	-9.5	-3.5	0.4	-1.3	3.0	2.9	3.5	85	60	83	E	4	NW	3	NW	3	10*	9	10*	0.8	✱⁰ n, mg., a, p.
17	91.9	91.8	92.0	-6.5	-6.0	-5.1	-7.0	2.5	3.0	2.2	84	93	79	NE	2	E	1	E	3	10	10*	2	5.6	✱ n, mtg., p.
18	88.1	92.4	95.6	-10.0	-6.0	-8.2	-9.4	1.8	1.4	1.2	61	55	51	E	4	E	4	E	4	10	3	8	2.0	
19	97.1	94.4	93.2	**-12.4**	-11.4	-7.0	-8.0	**0.7**	2.3	2.2	37	82	87	E	1	E	1	E	2	0	9	7		✱ a, ✱⁰ sch. p.
20	87.6	88.9	91.3	-11.7	-3.2	-3.6	-2.0	3.3	3.3	3.2	90	92	80	S	3	E	2		0	10*	9*	10	6.0	✱ n, ✱ sch. a, p.
21	95.3	98.3	98.3	-4.3	-1.8	-3.8	-3.8	2.2	1.7	2.0	54	48	57	SE	4	SE	6	E	5	0	7	10	1.5	✱ sch. n.
22	87.9	87.6	86.7	-6.2	-6.2	-6.4	-6.6	1.5	1.7	1.7	50	60	60	E	8	E	4	E	4	10	10	10		
23	87.6	88.0	86.2	-7.5	-5.0	-3.2	-1.4	1.9	2.7	2.7	59	73	64	E	4	E	2	E	2	10	10	10		
24	85.5	86.0	86.2	-5.0	-1.0	-2.0	-3.0	2.9	2.5	2.2	67	62	60	E	2	SE	2	SE	2	10	10	10		
25	85.2	85.5	85.5	-3.6	-3.0	-2.6	-4.0	2.0	2.3	2.5	55	61	72	E	5	E	3	E	1	10	7	10		
26	85.7	88.5	90.1	-4.6	-3.0	-2.2	-1.8	3.1	3.1	3.4	83	80	85	E	1	E	1	E	2	10	9	10		
27	90.3	91.2	90.2	-3.0	0.5	-0.4	-0.2	4.1	4.1	3.8	86	91	83		0	E	2	SE	4	10	10*	10		✱ mtg., p.
28	87.6	89.2	89.5	-2.9	-2.2	-2.0	-1.4	2.6	2.7	2.5	66	67	59	E	4	E	4	E	4	0	8	7	1.2	
29	85.8	82.8	76.9	-2.6	-1.6	-0.6	1.4	2.4	2.8	3.4	59	64	66	E	3	E	3	SE	7	5	7	3		
30	59.7	**59.3**	60.2	-2.0	2.8	2.0	1.4	3.3	3.4	3.4	59	64	66	SE	8	SE	6	SE	4	10	10	10		
31	68.4	74.8	79.3	-1.3	-1.0	-1.0	-0.6	3.5	3.9	4.0	82	90	91	E	2	S	1	S	1	10	10*	10*	0.0	✱⁰ sch. n, a, ✱⁰ p.
M.	95.0	96.3	96.5	-4.4	-1.8	-1.8	-1.8	3.1	3.1	3.0	70	73	71		3.1		2.7		2.8	8.0	8.4	8.3	44.9	

$H = 17$ m, $H_b = 22.4$ m — $\varphi = 67^0\ 17'$ N

$C_g = 1.85$ mb bei 999 mb — $\lambda = 14^0\ 24'$ E

Januar.

Datum.	Luftdruck. 900 oder 1000 + 8	2	7	Luft-Temperatur. Min.	8	2	7	Absolute Feuchtigkeit. 8	2	7	Relative Feuchtigk. 8	2	7	Richtung und Stärke des Windes. 8	2	7	Bewölkung. 8	2	7	Niederschl.	Bemerkungen.
1	80.5	79.2	77.8	1.7	2.2	2.6	1.4	3.7	2.7	3.4	68	48	66	E 2	E 4	E 2	2	9	7	0.0	
2	67.8	59.5	55.6	0.9	2.4	3.5	4.6	3.7	3.3	3.6	68	55	56	E 5	SE 6	SE 6	3	7	8		
3	**55.1**	60.3	63.3	0.8	3.8	5.0	2.8	4.4	5.3	4.8	73	81	86	S 4	SW 5	ESE 2	9	9●	7	1.6	◍ tr. n, a, p.
4	67.1	65.5	67.0	1.6	2.6	3.6	1.0	4.4	3.8	5.0	79	64	00	S 2	SE 2	S 3	5	9	10●✱	2.7	◍ ✱ sch. n, ✱ sch. a, ◍ ✱ p.
5	71.3	77.1	79.2	0.0	4.0	3.4	5.8	5.1	4.7	4.8	84	80	70	W 6	W 3	WSW 4	10●✱	8	8	16.5	◍ ✱ n, a, ● tr. p.
6	79.7	83.2	85.9	0.6	2.6	3.6	3.6	4.9	4.5	5.7	89	77	97	SW 4	WSW 2	NW 3	10●✱	8	5	1.9	◍ ✱ n, ● ✱ sch. a, p.
7	89.7	88.6	88.7	0.5	1.5	-0.8	-3.0	4.5	3.2	**2.2**	87	74	60	0	E 1	E 4	8	4	0	1.9	
8	90.4	88.6	88.7	**-5.0**	-3.8	-3.2	2.0	3.2	3.6	5.1	92	97	96	E 5	E 5	SW 3	5	10	10●✱		✱ fl. a, ◍ ✱ p.
9	89.2	91.3	94.8	-4.2	1.3	1.1	2.0	4.4	4.7	4.0	87	94	75	S 3	SW 2	W 1	10	7	7	6.6	◍ tr. n, ✱ sch. a, ✱ p.
10	04.5	02.7	93.8	-0.5	1.0	0.2	0.8	4.4	4.7	4.5	89	00	92	NW 3	SSW 3	SSE 2	3	10●	10	6.6	✱ n, a, ✱ fl. p.
11	92.0	95.1	96.1	0.0	0.8	3.8	6.6	4.9	5.3	6.2	00	88	86	SW 4	S 3	SW 8	10●	8	10●	7.6	● n, ◍ ✱ a, ◍ p.
12	02.6	01.4	00.9	0.2	7.2	8.2	**9.2**	6.9	**7.0**	6.6	91	87	76	SW 6	SW 8	SW 7	10●	10●	10●	7.3	◍ n, ◍ tr. a, ◍ p.
13	97.8	02.0	02.3	5.6	7.1	4.2	2.2	6.6	5.8	5.2	87	93	96	SW 8	WSW 1	0	10●	9	10●	12.6	● n, a, p.
14	95.7	83.4	76.0	1.2	5.2	7.7	8.2	5.8	5.4	5.3	87	69	65	SE 3	S 4	S 5	8	8	10	26.2	◍ n.
15	66.5	69.3	72.9	4.8	5.8	4.2	2.6	5.8	5.0	4.6	85	80	82	SW 11	SW 11	SW 9	10●	7●✱	10●	3.0	◍ n, ● ✱ sch. a, ◍ tr. p.
16	85.2	80.8	83.3	-1.0	2.0	6.4	6.0	4.7	4.9	5.7	89	68	82	E 4	WSW 10	WSW 9	9	6	5	5.6	◍ ✱ n, a.
17	96.3	08.5	06.4	0.0	5.0	4.2	4.8	5.3	5.0	5.6	81	80	87	NW 8	WSW 6	SW 2	5	5	10	4.2	◍ ✱ n.
18	99.7	94.1	93.7	2.0	6.4	6.4	5.0	6.8	6.8	6.2	94	94	95	SW 5	SW 7	WSW 6	8	7	8	1.0	◍ ✱ n, ◍ sch. a, p.
19	99.2	13.8	23.6	-0.8	0.2	0.2	2.4	3.3	4.1	4.9	69	88	89	W 10	NW 11	WNW 10	7	8	8	14.0	◍ ✱ n, ◍ sch. a.
20	24.4	23.4	22.3	0.2	5.0	7.0	7.4	5.9	5.8	6.8	90	77	89	S 6	SW 6	SW 5	9	10●	10●	2.1	◍ n, ◍ tr. a, ◍ p.
21	22.7	24.4	26.8	5.0	6.8	7.4	6.8	6.5	6.7	6.3	88	88	86	SW 6	SW 5	SSW 5	10	7	10	7.0	● tr. n.
22	26.6	26.0	23.7	4.0	5.0	5.3	4.7	5.7	5.5	4.7	87	83	73	SSW 3	SE 2	E 2	9	6	8	0.5	◍ tr. n.
23	17.5	16.9	16.1	2.0	3.6	2.6	3.3	4.0	4.2	4.0	67	75	68	E 1	E 1	E 1	2	5	10		
24	19.8	23.5	26.1	2.0	4.3	3.0	2.4	5.7	4.3	4.3	92	76	79	W 1	W 3	W 3	10	7	7	5.0	● n.
25	32.5	34.5	**34.6**	1.1	3.1	4.2	4.6	5.7	6.0	4.7	98	97	74	NNW 4	W 4	NW 5	7●✱	8●	10	0.2	◍ ✱ sch. n, ◍ sch. a, ● p.
26	31.6	31.3	30.6	0.2	5.2	5.7	6.6	6.0	5.3	5.5	90	77	76	NW 5	WSW 4	WSW 5	9	10	10	0.5	◍ n.
27	27.0	26.4	24.2	3.3	5.3	7.0	5.0	6.1	6.0	5.5	92	79	84	WSW 4	WSW 4	SW 3	10	8	10	2.6	◍ n.
28	18.3	16.2	14.5	2.9	3.4	2.9	2.8	5.2	5.2	4.6	90	93	81	S 2	0	0	10	8	10	2.0	◍ n, ◍ tr. a.
29	07.2	01.6	95.2	-2.0	-0.4	0.0	-1.0	3.0	3.7	3.7	66	79	86	E 3	E 3	E 5	0	0	0	0.2	
30	82.5	79.8	78.4	-2.0	1.0	1.6	2.2	2.5	3.8	3.9	50	74	72	E 6	SE 6	SE 5	8	7	10		
31	74.7	75.8	78.8	0.5	2.0	2.8	2.3	3.2	3.4	4.5	60	60	82	E 4	E 3	E 2	3	8	7		✱ fl. p.
M.	97.3	97.6	97.5	0.8	3.2	3.7	3.7	4.9	4.8	4.9	83	80	81	4.4	4.4	4.1	7.4	7.6	8.2	139.4	

Februar.

Datum.	Luftdruck. 900 oder 1000 + 8	2	7	Luft-Temperatur. Min.	8	2	7	Absolute Feuchtigkeit. 8	2	7	Relative Feuchtigk. 8	2	7	Richtung und Stärke des Windes. 8	2	7	Bewölkung. 8	2	7	Niederschl.	Bemerkungen.
1	84.4	88.8	93.1	-1.0	2.0	1.8	2.2	3.0	5.1	4.8	57	96	89	E 2	SE 2	SW 4	9	10●✱	8●✱	0.0	◍ ✱ a, p.
2	98.0	95.9	86.4	0.8	3.8	1.8	1.6	5.0	**5.3**	4.6	83	00	89	SW 4	WSW 3	SW 4	10●✱	7●✱	10●✱	8.6	◍ ✱ n, a, p.
3	84.8	89.3	87.1	0.2	3.2	1.8	1.8	5.2	4.8	4.4	90	91	84	SSW 4	SW 2	WSW 4	10●△	7●✱	8	7.8	◍ ✱ n, a, p.
4	79.7	81.2	83.0	0.7	1.2	1.0	2.5	4.1	4.4	3.6	81	89	65	S 5	SW 5	SW 5	8	10✱	8	3.8	△ sch. n, ✱ a, p.
5	75.9	70.0	69.4	-1.4	1.6	**4.7**	2.0	4.2	4.7	4.0	82	73	75	E 3	SW 4	SW 5	10	10	10△	7.3	✱ n, ◍ a, △ sch. p.
6	**62.3**	64.7	71.1	-1.4	0.6	1.0	-0.6	4.1	4.2	4.4	84	85	99	SE 3	ESE 2	WNW 5	6	7	10✱	9.2	△ u. ✱ n, ✱ p.
7	87.6	92.0	95.6	-3.3	-3.3	-1.0	-1.3	2.9	3.8	3.6	80	88	86	SE 1	NW 4	N 1	6	8	5	6.3	✱ n, a.
8	90.7	82.0	85.0	-4.6	-3.4	-2.0	-3.0	3.3	3.6	3.4	92	89	90	E 4	E 5	E 5	0	0	7	0.0	
9	65.5	66.1	64.0	-3.6	2.4	2.8	2.5	3.7	3.8	3.7	68	67	67	E 5	SSE 2	SSE 1	10	10	10		
10	70.3	77.9	78.3	-0.7	1.8	0.2	0.0	4.3	3.9	2.9	82	83	63	WSW 6	WSW 3	0	10●✱	7	5	5.0	◍ ✱ n, ✱ a.
11	69.4	72.8	73.7	-1.8	0.2	0.8	1.3	3.7	2.4	4.4	79	50	87	E 4	E 3	E 3	10	8	7	1.5	
12	81.3	79.0	68.1	-0.4	0.6	1.4	1.6	4.4	2.4	3.8	92	48	74	SE 2	ESE 3	SE 6	4	4	10		
13	75.7	84.0	88.3	-0.5	3.0	3.2	2.5	4.9	4.4	4.2	87	76	75	WSW 6	SW 6	SW 3	9●	9	10	3.7	◍ n, ● ✱ a, p.
14	97.7	01.4	03.0	1.0	3.0	2.6	1.0	4.1	3.1	2.7	72	55	54	E 1	E 1	E 2	8	3	5	1.4	
15	04.7	00.9	00.6	-1.0	2.0	3.2	3.7	3.8	3.8	4.1	71	66	68	E 2	E 5	0	5	6	7		
16	03.8	06.6	07.9	1.4	1.4	2.0	1.0	4.5	4.4	3.1	89	82	63	NNW 3	N 2	0	10●✱	7	3	2.5	◍ ✱ n, a.
17	08.5	08.0	07.3	-3.6	-3.6	-1.7	-2.0	2.3	3.5	2.6	63	85	64	ENE 2	E 2	E 2	3	3	0	0.0	♖ n.
18	06.4	06.3	06.5	-5.1	-4.6	-3.5	-3.7	2.0	2.8	2.7	60	77	77	E 2	E 2	E 1	0	0	4		♖ n.
19	09.2	10.6	10.3	-5.8	-5.8	-3.5	-3.5	2.0	2.3	2.3	67	65	63	E 1	E 2	E 2	3	0	0		
20	06.4	06.7	06.7	-5.8	-4.8	-3.9	-5.4	2.9	2.9	2.7	91	84	87	E 2	E 2	E 2	6	5	5	1.8	✱ n, a.
21	06.9	08.4	09.2	-5.5	-5.0	-4.4	-6.5	2.2	1.9	1.7	69	56	60	E 4	E 3	E 3	9	4	0	1.5	✱ n.
22	11.4	12.5	11.4	-8.6	-7.6	-5.0	-5.6	2.3	2.1	2.7	87	64	90	ENE 3	E 2	ENE 3	10✱	1	1	0.0	✱ fl. n, a.
23	09.9	10.8	12.2	-9.4	-4.4	-1.8	-1.5	3.1	3.5	3.7	91	87	90	E 3	E 3	E 3	10✱	8	7	4.0	✱ n, a.
24	16.4	18.7	18.9	**-10.1**	-4.6	-1.6	-1.9	2.7	1.9	**1.2**	81	46	30	E 3	E 2	E 5	0	0	1	2.7	
25	**19.6**	16.2	13.3	-4.6	-3.6	-3.6	-2.9	2.6	1.8	2.2	72	51	60	E 3	ESE 6	ESE 7	3	7	6		
26	13.0	11.3	10.9	-4.2	-3.8	-3.8	-3.9	1.9	1.9	1.6	55	55	47	E 5	E 4	E 6	9	8	7		
27	10.8	10.6	09.8	-5.8	-4.8	-3.4	-4.5	2.8	1.9	1.8	85	54	53	E 4	E 4	E 5	2	0	0		
28	11.9	09.6	09.9	-6.4	-4.4	-3.4	-4.7	2.4	1.9	1.4	71	54	42	E 3	E 3	E 3	4	3	0		
M.	95.1	95.8	95.8	-3.2	-1.2	-0.5	-1.0	3.4	3.3	3.2	78	72	71	3.2	3.1	3.2	6.6	5.4	5.5	67.1	

H = 17 m, H_b = 22.4 m
C_0 = 1.85 mb bei 999 mb

φ = 67° 17′ N
λ = 14° 24′ E

März.

Datum.	Luftdruck. 900 oder 1000 + 8	2	7	Luft-Temperatur. Min.	8	2	7	Absolute Feuchtigkeit. 8	2	7	Relative Feuchtigk. 8	2	7	Richtung und Stärke des Windes. 8		2		7		Bewölkung. 8	2	7	Niederschl.	Bemerkungen.
1	10.7	12.0	13.1	-6.2	-5.0	-4.2	-4.8	2.2	2.4	2.8	69	71	85	E	3	E	3	E	2	7	7	8*		
2	15.7	15.7	15.2	-6.0	-5.0	-2.9	-0.1	2.5	3.6	4.3	77	98	93	E	3	E	2		0	6	10*	10	1.9	✱ a, p.
3	15.7	11.7	06.5	-5.4	1.6	2.8	2.5	4.6	4.5	5.0	89	79	91	SSW	3	SW	4	SW	4	10●*	9	8	5.3	● ✱ n, a, ● p.
4	00.2	00.3	98.5	0.5	0.5	-0.5	0.8	3.8	3.0	4.3	80	68	88	W	5	WNW	5	NW	5	6	7	6	12.4	● ✱ n, △ sch. a, p.
5	94.4	83.2	**75.4**	-1.4	-0.4	-0.6	-1.0	3.9	3.9	2.4	87	89	56	SSW	3	SSW	3	SE	4	10	7	6	9.5	△ n, ▯.
6	81.6	84.1	83.0	-8.0	-8.0	-7.4	-8.6	1.6	1.4	1.5	62	52	63	E	6	E	4	E	4	1	6	6		
7	84.0	85.2	86.3	**-14.4**	-13.4	-11.9	-12.5	1.0	1.1	1.0	62	58	56	ENE	3	E	3	E	3	1	2	4		
8	89.6	92.2	94.5	-14.0	-13.0	-10.2	-9.2	**0.8**	1.2	2.1	46	55	92	ENE	5	E	4	ENE	5	3	4	3		▯.
9	02.4	05.0	07.6	-13.4	-9.4	-7.0	-7.1	1.6	1.6	1.7	71	59	61	E	2	E	3	E	2	10	8	3		
10	15.3	18.1	21.2	-11.2	-10.2	-7.4	-8.2	1.4	1.4	1.2	62	52	46	E	3	E	3	E	3	2	0	2		
11	27.6	28.8	28.8	-11.4	-9.4	-5.4	-6.0	1.8	1.7	2.0	78	55	67	E	2	E	2	E	1	8	6	7		
12	**29.0**	28.2	28.0	-10.5	-6.2	-3.8	-6.4	2.4	1.7	2.1	83	48	72	E	2	E	2	E	1	1	0	1		
13	22.2	17.1	14.4	-9.2	-6.2	-3.4	-4.8	1.5	1.6	1.6	50	44	49	ENE	2	ENE	3	E	3	7	7	7		
14	12.9	13.2	14.2	-9.4	-8.4	-7.6	-8.5	1.4	1.3	1.2	54	51	48	NE	3	E	3	E	2	5	5	2		
15	21.5	23.8	26.5	-11.0	-9.0	-5.2	-5.8	1.6	2.8	2.4	66	90	79	E	3	E	3	E	3	0	0	0		
16	23.0	16.7	10.8	-9.0	-7.5	-4.4	-5.4	1.6	1.7	1.8	60	51	58	E	5	E	4	ESE	5	5	7	8		
17	12.5	14.0	13.5	-8.8	-3.8	2.2	1.2	2.9	4.4	3.7	82	82	73	E	2	W	2	W	3	8	8	8	4.0	✱ n, a.
18	03.4	04.1	02.1	-4.1	**4.4**	**4.4**	2.8	**5.6**	4.5	5.0	90	73	89	SSW	3	SW	5	SW	5	10●	9	10●	2.5	● n, a, p.
19	97.2	96.7	92.5	0.2	1.2	2.4	0.8	5.0	3.7	4.7	00	68	96	SW	4	WSW	5	SW	6	10	7	10●*	6.9	✱ n, ✱ u. △ a, ● ✱ p.
20	89.6	92.1	91.5	-0.1	2.4	2.4	1.5	5.1	4.9	4.9	93	89	94	W	5	NW	3	NW	3	9●	8	8	3.4	● n, ● ✱ a.
21	01.6	04.7	06.1	-0.7	-0.2	0.5	-0.2	3.6	4.1	4.2	79	86	91	NNW	3	NNW	3	NE	3	5	5	5	1.0	● ✱ n.
22	08.6	08.1	06.2	-5.2	-3.2	0.2	-1.4	2.9	4.1	3.7	78	88	90	E	2	E	2	ESE	2	5	8	10*		✱ a, p.
23	06.5	06.4	05.7	-4.0	-3.0	0.0	-1.8	2.9	3.7	2.5	78	79	61	E	1	E	1	E	2	6	6	7	15.7	✱ n.
24	04.5	04.7	06.5	-4.0	-3.0	-0.2	-2.0	2.2	3.6	2.4	60	79	60	E	4	E	4	E	3	1	2	3		
25	09.7	11.4	12.1	-4.8	-2.8	0.6	-0.2	2.8	4.3	4.0	74	88	87	E	1	ESE	1	ESE	1	4	1	4		
26	15.4	16.4	16.3	-6.1	-1.6	1.0	0.6	3.9	4.2	4.4	94	85	92	SE	2	ESE	2		0	10*	10	8	4.0	✱ n, a.
27	10.6	06.2	04.7	-1.6	-0.2	2.3	2.8	3.8	3.4	3.7	83	63	66	E	3	E	3	E	4	6	7	10	0.0	
28	05.0	04.6	04.1	-0.5	0.0	1.6	-1.6	4.4	2.7	3.3	96	52	81	S	1	SSW	2	ESE	4	8	7	4	1.5	✱ n.
29	01.2	01.5	01.0	-3.2	-2.2	-0.4	-2.4	3.3	3.7	2.2	84	83	57	E	3	E	5	SSE	5	5	8	8		
30	93.4	86.6	80.7	-5.7	-5.2	-1.6	-3.8	1.7	2.2	3.4	53	55	97	ENE	6	E	5	E	6	8	8	10*		✱ p.
31	77.3	83.3	86.4	-7.7	0.8	2.1	0.8	4.3	4.3	4.3	88	80	88	WSW	4	WSW	3	WSW	2	7	6	6	0.8	✱ n, ✱ fl. p.
M.	05.9	05.7	04.9	-6.4	-4.0	-2.0	-2.8	2.8	3.0	3.0	75	70	75		3.1		3.1		3.1	5.9	6.0	6.2	68.9	

April.

Datum.	Luftdruck. 900 oder 1000 + 8	2	7	Luft-Temperatur. Min.	8	2	7	Absolute Feuchtigkeit. 8	2	7	Relative Feuchtigk. 8	2	7	Richtung und Stärke des Windes. 8		2		7		Bewölkung. 8	2	7	Niederschl.	Bemerkungen.
1	93.0	94.8	95.5	-1.1	0.8	-1.2	-1.0	3.2	4.2	4.1	65	99	95	W	5		0	SW	3	6	10*	7	4.8	✱ n, a, p.
2	96.4	89.0	86.3	-2.4	-1.4	0.8	2.0	3.7	3.8	3.4	90	78	64	E	1	ESE	4	S	4	9	8	9	12.6	● ✱ n.
3	84.4	84.0	**81.8**	**-3.3**	2.2	1.4	0.5	4.2	3.8	2.6	79	74	54	E	3	SSE	1	SE	3	8	8	8		
4	96.6	05.5	07.0	-1.9	1.6	2.6	1.2	3.7	4.0	3.4	71	72	68	NNW	4	E	1	E	1	3	3	9		
5	99.8	02.0	07.5	0.2	4.2	3.6	0.5	5.2	5.1	4.8	84	87	00	SW	7	SW	9	WSW	3	10●	10●	10●*	0.0	● n, a, ● ✱ p.
6	11.6	12.4	11.6	0.3	0.8	4.5	4.6	4.9	5.2	5.1	00	82	81	SE	1	SE	2	S	1	10●*	7	10●	32.0	● ✱ n, ● a, p.
7	11.4	13.0	13.5	0.2	5.2	5.4	5.2	6.0	6.0	5.7	90	89	86		0	SW	3	SW	3	10●	10●	10●	5.8	● n, a, p.
8	15.6	14.0	13.1	4.4	6.4	9.2	6.4	5.1	3.8	4.5	71	44	62	E	1	ESE	1	ESE	2	4	2	4	10.8	● n.
9	12.3	14.8	16.2	4.8	6.8	5.6	5.4	6.3	6.4	6.5	86	94	97	SW	3	SW	4	SW	4	10●	10●	10	1.3	● n, a, p.
10	21.4	23.7	**24.5**	3.8	4.2	7.6	6.8	6.0	6.0	5.7	97	77	77	E	1	E	1	E	1	10●	2	3	2.2	
11	22.9	22.6	21.9	3.2	5.2	8.2	6.8	4.6	4.8	5.7	69	60	77	E	1	E	1		0	3	3	3		
12	16.2	13.9	13.1	4.2	6.2	6.1	6.0	5.4	6.2	6.3	76	88	90	SSE	3	SW	2	SW	3	10	10●	10		● a, p.
13	12.0	10.8	10.2	4.9	5.4	7.2	5.4	6.3	**6.7**	6.1	94	89	91	SW	3	SE	1	E	1	10●	10	8	2.6	● tr. n, ● a.
14	08.0	07.7	07.3	4.0	7.0	**9.4**	7.4	4.1	4.5	4.7	55	51	61	E	2	E	2	E	2	3	0	0	0.0	
15	02.1	00.5	97.5	5.2	7.0	8.4	7.0	4.1	4.4	4.5	55	54	61	SE	2	SE	2	SE	2	0	0	7		
16	91.0	89.8	88.7	5.2	7.2	7.7	6.6	4.6	4.4	4.6	61	57	64		0	S	4	SE	3	10	7	7		
17	89.5	90.3	90.7	3.2	7.2	8.4	5.4	4.7	4.3	5.9	62	52	87	E	1	ESE	1		0	3	5	6		
18	92.6	93.9	96.3	3.7	4.7	6.2	5.5	5.5	5.0	5.7	86	71	85	W	2	NW	2	N	1	4	4	4	2.0	● n.
19	02.1	05.6	06.8	2.2	3.2	2.2	3.6	4.4	5.0	4.2	76	93	70	NW	2	W	1	NW	2	9	9●*	10	0.0	● tr. n, ● ✱ a, p.
20	09.7	06.2	04.1	2.3	3.8	6.0	2.6	5.0	3.4	5.1	83	49	93	ENE	1	ENE	3	S	3	8	8	10●	2.6	● tr. n, p.
21	07.1	09.3	10.2	1.0	4.0	3.6	2.4	5.7	5.1	4.9	93	87	89	SSW	4	SW	3	SW	4	9	9	10	9.7	● n, a, ● ✱ p.
22	07.0	03.6	01.2	1.2	3.2	7.8	6.0	4.0	3.7	3.7	69	47	53	E	3	E	3	ESE	4	9	9	8	3.3	● n.
23	97.7	94.6	94.5	3.0	5.0	6.0	3.8	4.7	3.9	3.3	72	56	54	E	6	ESE	6	SE	7	1	2	6		
24	97.1	97.5	97.2	2.0	3.0	5.0	3.0	3.4	3.4	3.4	59	52	59	E	3	E	3	E	2	10	7	6		
25	95.3	94.2	94.6	-1.1	0.4	1.4	4.4	4.4	4.9	5.4	92	96	87	E	1	SE	1	SW	4	10*	10●*	7	0.5	✱ n, ● ✱ a, p.
26	98.3	00.4	01.3	0.4	4.0	4.8	2.2	4.1	4.4	4.4	67	68	82	NE	2	N	3	NW	3	7	4	8	11.0	● ✱ n.
27	08.1	09.3	10.1	0.7	3.0	3.7	3.4	5.5	3.9	3.5	96	65	60	E	2	NE	2	NNE	1	5	5	5	0.0	● ✱ n.
28	10.4	11.5	12.5	-1.0	2.0	2.0	1.4	4.4	3.6	4.0	82	68	78	NE	1	NE	2	N	2	5	5	8	0.0	✱ n.
29	17.3	18.8	19.0	-0.8	1.2	3.5	3.0	4.1	3.7	2.8	81	63	49	E	4	E	3	E	4	0	2	4		
30	17.3	15.3	13.7	-0.6	2.4	4.1	3.4	3.2	2.6	**2.5**	58	43	42	ENE	4	E	4	E	3	4	0	0		
M.	04.8	05.0	04.9	1.6	3.9	5.0	4.0	4.7	4.5	4.6	77	70	74		2.4		2.5		2.5	6.7	6.0	6.9	101.2	

$H = 17\,m$, $H_b = 22.4\,m$ — $\varphi = 67^0\ 17'$ N

$C_g = 1.85$ mb bei 999 mb — $\lambda = 14^0\ 24'$ E

Mai.

Datum.	Luftdruck. 900 oder 1000 + 8	2	7	Luft-Temperatur. Min.	8	2	7	Absolute Feuchtigkeit. 8	2	7	Relative Feuchtigk. 8	2	7	Richtung und Stärke des Windes. 8	2	7	Bewölkung. 8	2	7	Niederschl.	Bemerkungen.
1	08.2	04.8	04.0	-0.5	2.0	4.0	2.9	3.6	3.2	3.8	68	52	67	ENE 2	NNE 2	N 3	5	5	10		
2	06.5	09.2	11.8	**-0.7**	2.3	6.6	4.8	5.0	5.6	4.6	91	77	71	W 5	SW 4	W 3	10●	7	7	1.0	◉ u. ◉ ✳ n, ◉ ✳ sch. a.
3	14.6	11.3	06.8	0.0	4.0	3.6	5.2	4.7	4.7	5.2	77	80	78	E 2	E 4	S 4	3	10●	9	1.9	◉ a, ● sch. p.
4	06.7	10.0	14.0	3.4	5.4	4.9	4.8	6.1	5.4	5.1	91	82	79	SSW 2	WNW 2	NW 2	10	8	7	1.8	◉ n.
5	18.3	20.1	21.2	1.6	2.6	5.0	5.0	4.9	4.5	3.9	89	69	60	NW 4	N 3	NW 2	10	6	4	0.8	△ sch. n.
6	**22.8**	22.4	21.7	0.2	4.2	4.7	5.0	4.4	4.3	4.0	71	67	61	E 2	N 2	N 2	2	5	0		
7	19.3	16.6	14.1	0.8	3.8	7.2	7.4	3.0	3.7	3.5	50	48	45	E 2	E 2	E 2	1	0	1		
8	12.3	11.4	10.7	3.5	8.0	10.4	12.2	5.2	5.7	4.6	64	60	43	0	N 1	E 2	0	2	1		
9	07.5	08.9	08.0	1.0	10.0	9.6	10.8	5.5	6.8	6.3	60	76	65	E 2	0	0	10	9	2	0.0	● tr. n.
10	09.1	10.2	09.8	6.4	6.4	6.8	5.8	6.8	5.7	5.4	94	77	79	NNW 2	N 3	N 1	10	9	10		≡ mg.
11	13.5	13.1	11.7	3.2	6.2	10.0	10.4	5.8	6.4	6.1	82	69	65	E 2	0	E 2	8	10	0	4.6	◉ n.
12	04.9	03.6	06.1	6.2	10.4	11.2	7.4	6.1	5.6	7.5	65	57	98	ENE 5	ESE 2	S 2	10	7	10●		● p.
13	10.0	09.9	09.5	6.0	8.0	11.3	8.4	7.3	6.8	6.4	92	68	78	SE 1	0	N 2	10	9	8	11.0	◉ n.
14	11.5	14.2	14.9	6.2	7.2	9.8	6.4	7.1	6.3	6.6	94	69	91	S 5	S 3	S 3	10●	9	10●	6.5	◉ n, ● tr. a, ◉ p.
15	16.5	17.2	16.5	3.7	5.2	9.1	6.6	6.2	6.2	6.9	94	72	94	S 3	SW 4	SSW 2	10●	9	10	6.0	◉ n, ◉ tr. a, ◉ p.
16	16.9	17.6	17.8	5.2	7.4	9.0	7.6	6.8	7.2	7.1	89	84	91	SSW 1	0	N 1	10	4	1	7.9	◉ tr. n.
17	17.2	15.6	14.9	6.8	10.8	14.8	14.6	5.1	5.6	5.2	53	45	42	E 4	E 3	E 4	0	0	5		
18	18.1	20.2	20.4	5.8	7.8	7.6	8.0	7.7	7.7	7.3	98	99	92	WSW 2	0	W 1	10●	10●	3	1.5	◉ n, a, p.
19	21.2	21.1	20.1	7.0	8.5	7.6	7.4	7.6	7.6	6.4	92	98	83	W 1	SW 2	SW 2	10	10	9	8.8	≡
20	14.2	12.0	11.0	4.4	5.4	5.0	5.6	6.1	5.3	6.0	91	81	88	WSW 3	W 3	NW 1	10	7	6	2.0	◉ n, ● tr. a.
21	11.4	10.3	08.3	4.1	4.6	5.4	4.6	3.7	4.0	4.5	59	60	71	NNW 4	N 3	N 2	7	8	6	0.0	
22	05.6	06.4	07.5	2.6	3.6	5.2	4.0	4.0	4.0	4.7	67	60	77	NW 2	NE 2	NE 2	9△	8	5	1.0	△ n, ◉ tr. a.
23	11.3	11.5	11.0	0.0	3.0	4.7	4.8	**2.8**	2.9	3.0	49	45	46	E 1	ENE 1	NE 2	0	2	4	0.0	
24	11.5	12.1	12.0	1.0	3.6	5.2	4.6	**2.8**	3.0	3.2	48	45	50	E 2	NE 2	N 3	8	6	1		
25	12.2	12.2	12.6	0.5	4.0	6.0	5.2	5.5	3.8	4.5	90	55	68	E 1	N 2	N 1	9	5	4	0.0	◉ n.
26	12.8	11.8	10.3	2.9	4.4	5.1	7.0	4.3	4.2	3.9	68	64	52	NNE 2	NE 3	NE 2	6	2	0		
27	06.0	05.5	05.8	3.9	10.4	13.6	13.9	4.1	5.6	5.4	44	48	46	E 4	E 4	E 3	0	1	3		
28	04.0	02.9	03.3	10.2	12.2	15.2	12.8	6.2	6.5	5.9	59	51	54	E 4	E 3	SE 4	3	4	6		
29	03.7	07.0	05.4	10.5	13.0	**16.3**	15.8	6.5	7.8	8.1	58	57	61	E 5	E 4	E 4	10	5	5	0.0	● tr. n.
30	00.5	99.0	98.7	12.6	14.1	**16.3**	11.4	7.8	8.2	**8.3**	65	59	83	E 5	SE 5	ESE 3	8	9	6		
31	98.4	97.8	**97.1**	10.3	11.3	10.6	9.4	7.4	8.1	8.2	74	85	93	0	W 2	W 2	9	9	9		◉ a.
M.	11.2	11.2	10.9	4.2	6.8	8.4	7.7	5.5	5.6	5.5	74	66	70	2.6	2.3	2.2	7.0	6.3	5.2	54.8	

Juni.

Datum.	Luftdruck. 900 oder 1000 + 8	2	7	Luft-Temperatur. Min.	8	2	7	Absolute Feuchtigkeit. 8	2	7	Relative Feuchtigk. 8	2	7	Richtung und Stärke des Windes. 8	2	7	Bewölkung. 8	2	7	Niederschl.	Bemerkungen.
1	01.6	05.9	07.9	7.8	9.4	11.8	9.6	8.1	7.8	8.2	92	76	92	W 1	SW 4	SSW 2	9	9	8	3.0	◉ n.
2	10.7	11.2	11.1	7.6	10.6	11.4	10.6	7.4	6.4	6.4	77	64	68	0	N 3	N 1	10	6	3	3.0	◉ n.
3	11.3	10.5	11.2	7.8	10.8	12.6	12.2	7.0	6.4	7.1	72	59	67	ENE 1	N 2	S 1	5	4	6		
4	18.3	19.8	20.9	8.7	9.6	11.6	9.9	7.2	8.0	6.9	82	79	75	S 3	SW 3	0	8	8	8		
5	24.2	21.6	20.5	7.0	10.0	11.0	12.2	**5.2**	6.1	6.5	57	62	62	NNE 1	NE 1	0	3	5	5		
6	19.3	18.8	18.6	9.5	11.2	12.0	13.1	7.0	8.4	9.0	71	82	81	NE 2	E 1	E 1	10	7	6		
7	13.4	16.9	23.9	10.2	10.4	9.2	9.0	**9.4**	8.7	7.6	00	00	89	SW 4	SW 4	SW 4	10●	10	10	4.9	◉ n, a.
8	**25.6**	24.1	23.0	6.8	9.8	12.4	12.2	7.9	8.2	8.3	87	77	79	SW 4	SW 3	SW 4	10	9	9	2.0	◉ n, ◉ tr. a.
9	20.2	19.1	21.3	9.4	10.4	10.2	9.0	**9.4**	8.8	8.6	00	95	00	WSW 2	SW 4	SW 3	10●	10●	10●	6.0	◉ n, ● tr. a, p.
10	22.2	23.1	20.6	6.7	9.2	10.0	11.0	8.4	8.2	8.6	98	89	87	W 1	WSW 1	0	10	10	8	5.3	≡
11	15.2	13.2	08.3	8.6	8.6	11.2	10.7	8.3	7.5	7.8	00	75	82	SW 3	SW 4	SW 4	10●	9	10●	0.4	◉ n, ◉ tr. a, ◉ p.
12	03.3	03.6	02.5	**6.0**	8.0	8.8	10.1	7.3	7.0	6.5	92	83	71	SW 3	SW 4	WSW 3	10●	10	8	10.5	◉ n, a, p.
13	97.8	90.9	**84.9**	7.0	9.0	9.2	9.8	6.7	6.8	6.5	78	79	71	SW 1	SSW 1	SE 3	10●	10●	9●	7.3	◉ n, a, p.
14	87.2	89.9	93.7	6.8	7.8	9.8	8.6	7.5	7.6	7.7	94	84	92	SW 1	SE 1	S 1	10●	9	10●	11.5	● n, a, p.
15	99.9	00.0	96.1	6.4	8.4	10.4	9.4	6.2	6.8	7.3	76	73	84	S 3	SSW 3	0	8	7	10	5.3	◉ n.
16	93.4	92.6	90.9	6.4	10.4	9.8	8.6	6.6	6.5	6.3	70	71	76	SW 3	SW 2	SW 2	10	8	8	6.0	◉ n.
17	88.3	90.3	91.3	7.5	12.0	11.0	13.8	6.8	8.1	7.8	65	83	67	NW 3	0	0	10●	9	7	0.0	◉ n, a.
18	97.6	99.5	01.5	9.7	15.2	13.6	12.0	7.8	8.0	8.0	60	69	76	NE 1	NE 2	NE 3	1	2	5	0.5	
19	03.9	05.7	06.2	8.6	9.6	10.2	9.2	8.4	8.1	7.5	95	87	87	S 1	W 3	W 2	10●	9	8	0.0	◉ n, a, p.
20	04.3	05.2	04.7	7.6	10.1	11.3	11.8	7.5	8.1	8.6	80	82	84	0	NE 2	NE 2	9●	5	3	13.5	● n, ● tr. a.
21	07.1	07.6	08.5	8.4	15.4	**15.8**	15.0	6.1	5.9	7.9	47	44	62	E 1	NE 2	N 2	1	4	3	0.0	
22	11.7	13.9	14.7	9.7	15.2	13.0	11.4	7.8	8.6	8.4	60	77	84	0	W 2	W 1	1	2	8		
23	15.7	17.1	17.9	8.4	9.4	11.0	9.6	7.3	7.4	7.4	84	75	84	SW 3	WSW 2	W 2	10	8	8	0.5	● n, p.
24	18.7	15.9	11.9	7.7	11.2	10.8	10.2	6.8	6.3	6.7	68	65	72	NW 3	NW 3	WNW 3	5	4	5	1.0	● n.
25	03.9	01.4	97.8	7.3	9.8	10.6	9.0	6.3	6.4	7.8	69	68	92	N 4	NW 4	SW 1	3	6	10●		● p.
26	95.8	98.0	01.0	7.5	9.0	10.1	9.6	8.0	8.4	7.7	93	91	87	N 4	WSW 1	NW 3	10●	10●	9	4.9	● n, a, p.
27	07.1	10.3	11.1	7.5	9.0	9.9	9.2	8.0	6.6	6.4	93	73	74	N 3	NW 3	N 3	9	9	8	5.1	
28	13.0	14.7	14.9	7.5	8.5	10.4	9.6	6.8	6.6	6.6	83	70	74	N 1	NW 1	NW 1	10	9	9	0.0	● tr. n.
29	18.0	19.8	20.2	8.9	10.4	11.4	10.4	6.6	7.8	6.7	70	78	72	S 1	W 1	N 1	9	6	7		
30	20.6	20.7	20.8	7.9	11.4	13.2	13.6	8.1	6.7	8.2	81	60	71	N 2	N 2	N 1	1	1	1		
M.	09.0	09.4	09.3	7.9	10.3	11.1	10.7	7.4	7.4	7.5	80	76	79	2.0	2.3	1.8	7.7	7.2	7.3	90.7	

$H = 17$ m, $H_b = 22.4$ m
$C_g = 1.85$ mb bei 999 mb

$\varphi = 67^0\ 17'$ N
$\lambda = 14^0\ 24'$ E

Juli.

Datum.	Luftdruck. 900 oder 1000 + 8	2	7	Luft-Temperatur. Min.	8	2	7	Absolute Feuchtigkeit. 8	2	7	Relative Feuchtigk. 8	2	7	Richtung und Stärke des Windes. 8		2		7		Bewölkung. 8	2	7	Niederschl.	Bemerkungen.
1	21.7	20.7	19.1	10.4	14.6	15.6	18.6	8.9	8.5	8.3	72	64	52	N	2	N	2	NE	2	0	1	1		
2	21.7	22.2	21.2	13.4	15.4	16.8	16.6	10.8	9.9	9.7	83	69	69	NNE	2		0	NE	1	3	0	0		
3	19.9	19.4	17.8	14.3	18.8	21.5	22.7	10.7	12.0	10.9	66	63	54	N	1	NE	1	E	1	1	0	0		
4	16.6	15.7	14.6	16.3	21.8	**25.5**	21.4	8.6	9.2	9.9	44	39	53		0	E	1		0	0	0	0		
5	12.0	11.3	10.6	19.5	22.4	24.8	25.2	7.9	8.3	8.8	40	36	37	E	4	E	2	E	1	1	7	3		
6	10.3	09.1	07.3	11.8	14.8	15.2	15.4	11.4	11.2	11.5	91	87	88	N	2		0	NE	1	10	10	9		≡
7	02.6	06.0	08.2	12.6	21.6	15.6	14.4	7.8	11.5	10.0	41	87	83	NE	3	E	1	SW	2	8	10•	9		● a, p.
8	04.9	03.1	02.7	11.0	15.0	17.0	16.4	11.3	11.5	12.4	89	80	89	E	2	E	2		0	4	3	5	1.9	● u. ⊼ p.
9	06.4	07.4	06.4	11.1	12.6	12.6	11.0	10.3	9.1	9.8	96	85	00	SW	1		0	SW	2	10•	7	10•	12.6	● n, a, p.
10	04.0	02.5	98.6	8.5	10.5	12.2	13.4	9.5	10.6	11.2	00	00	98	SW	2	N	2	SW	1	10•	10•	9≡	19.0	● n, ≡ a, p.
11	01.7	06.6	09.5	10.5	14.1	9.8	10.4	9.6	8.8	8.7	80	98	93	SW	2	W	2	WSW	2	8	10•	9	5.3	≡ ● a, ● p.
12	12.0	14.5	15.3	**8.2**	13.2	13.6	13.2	8.2	9.5	9.2	73	82	82		0	W	1	W	2	8	8	10	3.6	● n.
13	18.9	22.8	**24.4**	9.7	12.6	12.2	12.8	9.3	8.1	7.8	87	76	72	S	3	W	2	WSW	2	9	8	8	8.6	● n.
14	23.1	21.6	19.3	8.5	14.0	14.6	15.4	7.2	6.6	8.4	61	53	64	E	2	N	2	NE	2	4	4	0		
15	16.7	15.0	13.3	11.8	18.8	21.2	21.6	9.8	9.8	10.7	60	53	56	E	3	E	2		0	2	3	3		
16	14.7	15.2	14.5	12.9	15.4	15.6	17.6	11.6	11.9	12.3	89	90	82		0		0		0	10•	7	0	0.0	● tr. n, ● a.
17	12.1	10.3	09.0	13.8	18.8	23.2	22.4	10.4	11.1	11.4	64	53	56	E	2	E	2	NE	2	2	2	9	4.6	
18	11.9	10.5	10.5	14.0	16.0	17.2	16.2	12.1	11.1	10.8	89	76	79	N	1	NE	2	NE	2	8	4	5	0.5	● n, ⊼ 10-10⁴⁰ p.
19	13.0	14.5	14.9	10.6	15.6	15.8	15.7	11.8	11.1	12.1	89	83	91	S	1	NW	1	W	2	9	9	7	0.1	● n.
20	17.0	17.6	19.0	10.6	16.6	20.2	16.4	11.9	11.6	11.8	84	66	85	E	1		0		0	10	7	7		
21	20.4	21.3	20.2	14.2	20.2	18.0	18.6	12.5	12.3	8.3	71	80	52	E	1		0		0	2	0	0		
22	17.7	18.3	17.4	16.0	20.5	19.2	17.8	12.3	10.1	11.9	69	61	78		0	SSW	2	SSW	2	2	3	6		
23	14.4	12.2	12.6	14.4	15.8	16.8	15.0	12.5	11.6	10.9	93	81	86	SE	1		0	SW	4	8	9	8		● a, p.
24	12.7	14.7	15.7	11.8	13.8	13.3	11.9	8.1	8.4	7.4	69	74	72	W	5	WNW	5	W	4	3	6	6	0.6	● sch. a.
25	19.7	18.6	14.3	9.5	10.5	11.4	14.1	**5.6**	6.1	7.0	59	60	59	NW	2	NW	3	N	3	5	4	3	4.3	
26	07.4	06.6	03.7	8.9	18.4	18.4	21.4	9.5	12.7	10.8	60	80	57	E	5	NNW	1	NE	1	8	9	5		● a, ⊼ 12³⁰-1³⁰ p.
27	02.7	01.5	00.1	13.6	16.6	17.2	15.4	**13.2**	12.8	13.0	94	88	00	S	1	NE	3		0	9•	9	10•	14.0	⊼ n.
28	01.5	00.8	99.7	12.0	12.2	14.0	14.4	10.1	9.6	11.7	96	81	96	WNW	5	N	4	NE	4	10	8	8	13.4	● n.
29	98.3	98.9	98.1	12.1	13.6	18.2	17.4	11.6	10.5	10.4	00	67	70	N	4	NE	3	E	3	10	9	7		
30	98.0	98.2	**97.5**	11.9	16.4	19.9	18.9	9.1	10.0	10.0	66	57	61	E	4	E	2	E	2	2	8	6	2.6	● n.
31	97.9	98.4	97.6	14.0	18.0	17.8	17.4	9.8	8.5	10.7	63	57	72	E	2	N	3		0	4	4	5	0.0	● n, ● sch. p.
M.	11.4	11.5	10.7	12.2	16.1	16.9	16.7	10.1	10.1	10.2	75	72	74		2.1		1.6		1.6	5.8	5.8	5.4	91.1	

August.

Datum.	8	2	7	Min.	8	2	7	8	2	7	8	2	7	8		2		7		8	2	7	Niederschl.	Bemerkungen.
1	96.1	95.5	95.3	14.2	15.2	20.0	19.4	11.5	10.8	10.7	89	62	64	SE	1	E	2		0	9	6	6	1.3	● tr. n.
2	96.7	98.3	98.7	14.0	16.2	18.4	17.9	**12.0**	9.8	9.4	87	62	62	E	2	E	2	E	2	8	9	6		● tr. a.
3	01.2	01.9	01.1	14.9	16.4	19.0	16.6	9.6	10.7	10.7	69	65	76	E	2		0	N	1	7	5	6	0.5	
4	00.3	01.5	01.2	13.1	14.3	13.4	13.9	9.3	10.0	10.0	77	88	85		0	NE	1		0	8	8	10•		● tr. p.
5	00.9	01.8	01.4	11.4	14.4	15.3	14.6	9.9	9.8	10.9	82	76	88		0	N	2		0	4	2	4	0.0	● tr. n.
6	02.4	03.5	03.9	11.4	14.0	15.7	14.7	10.8	11.0	10.9	92	83	88		0	N	1		0	7	6	9	0.2	● tr. n.
7	07.3	09.1	10.4	12.4	15.4	16.3	15.0	11.3	10.5	10.9	87	76	86	SE	1	N	2		0	9	8	8	0.0	● tr. n.
8	12.9	14.2	13.8	12.4	13.5	15.1	13.4	9.9	8.7	9.1	87	68	80	SSW	1	NE	1		0	7	7	10		
9	13.4	11.4	10.5	10.6	13.6	15.9	14.8	9.0	**12.0**	10.6	78	89	85	NE	2	NE	3	N	1	2	8	6		
10	06.9	04.8	03.5	9.9	18.4	19.3	16.4	10.2	11.4	9.8	64	68	70	SSE	1	SSE	1	NE	1	7	7	4		
11	01.1	00.8	99.7	11.8	13.8	15.5	15.3	10.5	9.8	10.2	91	75	79	W	1	N	1	ENE	1	2	7	7	6.8	● n.
12	02.9	07.2	11.2	13.8	15.4	14.1	12.4	11.0	9.8	9.3	85	83	88	SSW	2	SW	5	SW	4	9	6	7	0.0	● tr. n, a, p.
13	10.3	08.5	06.2	10.3	13.9	17.6	16.5	7.5	9.6	11.8	64	64	84	E	4		0		0	9	9	9	1.9	● n.
14	06.0	07.1	07.2	11.9	14.4	12.9	10.5	10.3	8.6	8.6	85	78	92	S	2	SW	2	SSW	2	8	8	10•	6.5	● n, a, p.
15	04.8	06.0	06.8	**7.6**	11.6	14.1	12.7	8.3	10.2	9.4	82	86	87	S	1		0	NE	1	6	6	7	21.8	● n.
16	08.7	08.2	07.4	11.1	12.7	13.3	12.6	9.6	9.3	8.9	89	82	83	N	1	N	1	N	1	9	9	8	0.0	● n.
17	03.9	03.2	03.4	11.7	13.6	14.1	13.3	9.5	9.8	9.8	82	83	87	NW	3	NE	3	NE	3	9	7	7	1.6	● n.
18	02.0	01.8	01.5	12.8	13.3	14.2	14.2	10.6	10.0	10.0	94	84	84	NE	3	NNE	3	NE	3	8	6	6		
19	02.4	03.4	03.9	12.7	13.7	13.8	13.1	11.6	10.0	10.8	00	86	97		0		0	SSW	1	10•	10	10≡	4.0	● n, ● tr. a, ≡ ● p.
20	05.6	05.3	06.1	12.8	14.3	16.9	15.4	10.9	9.1	8.1	91	63	62	E	1	E	1		0	9	5	4	4.9	● tr. n.
21	08.1	08.4	09.1	11.0	13.6	16.5	14.6	7.2	7.7	**5.6**	62	56	45	E	3	E	2	E	2	3	5	7		
22	11.5	12.7	13.4	11.6	14.1	17.5	16.1	7.0	7.9	8.5	59	53	62	E	3	E	3	E	3	5	2	3		
23	15.0	14.5	13.8	10.5	15.5	16.8	16.0	8.0	8.3	9.4	60	59	69	SE	3	E	1	NE	1	4	3	1		
24	15.0	14.5	14.3	8.1	16.6	**20.7**	16.6	8.2	8.8	10.6	58	49	75	NE	5	E	3		0	0	1	1		
25	14.6	12.8	13.6	13.6	16.3	18.1	17.8	8.2	9.0	9.4	59	58	62	E	2	E	2		0	1	2	2		
26	15.0	**15.1**	14.4	12.0	16.0	17.8	16.8	8.3	8.4	9.0	61	56	63	NE	1	N	1	N	1	1	1	0		
27	14.4	13.3	13.3	11.6	15.4	17.9	16.8	6.6	7.3	6.8	51	48	48	E	3		0		0	0	1	2		
28	10.4	08.1	07.0	11.8	16.0	17.1	15.8	8.3	7.5	7.0	61	52	53	SE	4	SE	4	S	1	5	5	7		
29	00.2	97.0	95.4	12.3	15.5	16.1	14.6	6.6	7.0	7.2	50	52	58	ESE	4	SE	5	SE	3	6	7	7	0.0	● tr. n.
30	95.9	97.5	99.7	11.9	13.0	13.2	11.4	8.8	9.1	9.6	80	81	96		0		0		0	10	10	9•	0.1	● tr. n, p.
31	98.9	92.7	**89.8**	10.3	11.5	13.3	11.1	9.0	8.5	7.7	89	75	78		0	SE	1		0	8	8	8•	8.9	● n.
M.	06.0	05.8	05.7	11.8	14.6	16.1	14.8	9.3	9.4	9.4	76	70	75		1.8		1.7		1.0	6.1	5.9	6.2	58.5	

$H = 17\,m$, $H_b = 22.4\,m$ $\varphi = 67^0\ 17'$ N

$C_g = 1.85$ mb bei 999 mb **September.** $\lambda = 14^0\ 24'$ E

Datum.	Luftdruck. 900 oder 1000 + 8	2	7	Luft-Temperatur. Min.	8	2	7	Absolute Feuchtigkeit. 8	2	7	Relative Feuchtigk. 8	2	7	Richtung und Stärke des Windes. 8		2		7		Bewölkung. 8	2	7	Niederschl.	Bemerkungen.
1	83.4	82.9	83.0	7.2	11.0	14.2	11.5	6.4	7.9	7.6	65	65	75	ENE	2	ESE	1	ENE	1	3	3	4	3.7	◍ n, ♕ 9 p.
2	80.5	80.0	78.5	9.4	10.6	10.7	10.1	8.2	7.3	7.3	87	76	79	SE	1	NE	1	N	1	4	10	7		◍ tr. a, ◍ p.
3	**75.1**	75.3	75.2	9.2	10.4	9.9	11.8	7.8	6.9	7.1	84	76	69	E	3	ESE	3	E	3	6	10•	7	7.6	◍ n, ◍ tr. a, ◍ p.
4	82.4	86.0	88.1	9.6	12.4	14.5	12.7	5.9	5.8	6.7	55	48	61	E	4	ENE	3	E	2	4	5	5	4.7	
5	90.0	89.3	87.6	6.8	9.4	13.7	10.6	7.4	7.7	8.7	86	66	92		0	E	3		0	10	7	10•		◍ p.
6	92.6	94.9	96.9	8.9	11.4	14.6	12.2	6.4	8.4	7.2	64	68	68	NE	3	ENE	4	E	2	2	3	1	4.8	◍ n.
7	99.4	00.7	00.7	7.5	10.8	14.1	12.2	8.4	8.0	**9.2**	89	67	88	SSE	3		0		0	3	7	6		
8	01.5	03.0	04.0	8.6	10.9	12.5	11.4	8.5	7.5	7.8	89	70	78	E	1	NE	1	NE	1	8	4	4	2.4	◍ n.
9	06.4	07.1	07.9	8.2	10.8	14.1	10.5	6.5	6.3	6.8	68	53	73	SE	2	ESE	1	E	1	3	5	4		
10	09.4	10.6	11.2	7.1	10.4	12.8	11.4	6.6	7.0	7.8	71	64	78	E	1	NE	1	NE	1	2	4	3		
11	13.7	14.3	14.4	6.2	9.2	12.3	10.8	6.7	7.2	8.3	78	67	87	E	2	N	2		0	0	1	1		
12	13.2	13.1	12.0	6.4	7.6	11.2	10.0	7.1	6.2	7.3	91	62	80	S	2	SSW	4	SW	4	9	2	10	5.0	◍ n.
13	12.0	12.7	12.7	6.1	10.4	10.5	10.4	**9.2**	9.1	8.7	98	96	93	SW	6	SW	6	SW	5	10•	10•	10•	11.4	◍ n, a, p.
14	08.8	06.9	03.3	7.1	13.4	13.5	12.4	7.8	8.9	8.5	69	77	79	SW	6	SW	5	SW	5	10	9	9	14.4	◍ n, ◍ sch. p.
15	07.2	13.0	15.9	9.6	10.6	10.8	10.4	9.0	6.9	6.3	95	71	68	W	6	W	4	W	3	10	7	6	6.1	≡ ◍ n.
16	16.8	**16.9**	16.5	8.9	10.7	11.5	9.5	8.4	7.7	7.8	89	76	88		0	N	1	N	1	8	5	3	0.5	◍ n.
17	15.2	14.4	14.9	7.2	10.3	**15.1**	12.5	6.0	6.4	6.7	64	51	62	E	3	E	3	E	3	0	0	1		
18	13.8	12.7	11.3	6.6	11.3	13.1	11.5	6.0	6.5	6.0	60	57	59	ENE	4	E	3	E	3	1	1	8		
19	10.0	09.1	09.0	6.9	8.9	10.5	8.7	5.7	4.9	**4.7**	67	52	56	E	3	E	4	E	3	2	6	6		
20	08.1	05.6	03.4	**6.0**	8.0	11.8	9.6	4.9	5.3	5.3	62	51	59	E	4	E	3	E	4	2	0	4		
21	98.3	98.1	96.4	7.7	9.3	11.5	10.5	5.9	5.9	5.9	67	58	63	SSE	3	SE	3	SE	3	8	8	4		
22	87.1	86.6	87.6	9.3	11.0	12.3	10.9	5.3	5.6	5.0	54	52	52	SE	6	SE	5	SE	4	10	7	7		
23	94.5	92.8	90.7	7.9	9.8	14.2	12.3	6.1	5.7	5.3	68	47	50	SE	2	ESE	3	ESE	3	1	3	7	0.5	◍ tr. n.
24	88.1	92.4	94.7	9.6	11.2	11.8	10.6	6.5	8.0	8.2	66	78	87	NE	4	E	4	ESE	2	7	8	8		
25	99.7	01.8	02.2	9.5	10.0	12.1	10.4	5.9	8.3	7.3	64	79	76	ESE	1		0		0	10•	7	6	0.6	◍ n, a.
26	02.9	04.4	04.8	7.2	9.2	11.4	9.2	7.1	6.0	7.3	81	59	84	ESE	1	S	2	S	2	10•	7	7	1.5	◍ n, a.
27	06.2	08.7	11.2	**6.0**	8.0	10.2	9.3	7.3	7.4	6.3	92	79	72	ESE	1		0	NE	1	4	7	3	0.6	◍ n.
28	14.9	13.1	09.3	6.1	8.0	11.1	8.4	6.7	5.4	5.4	83	54	66	S	1	ESE	1	S	1	8	5	5		
29	93.3	96.0	98.8	7.9	8.4	8.9	9.5	7.5	7.6	7.1	92	89	80	ESE	4	SW	7	SW	6	10	10•	8	3.2	◍ n, ◍ sch. a, p.
30	05.5	07.9	07.2	7.4	9.3	9.7	9.4	7.1	8.9	6.5	82	99	74	SW	6	SW	6	SW	6	10•	10	10	7.8	◍ n, ◍ sch. a, ◍ p.
M.	01.0	01.7	01.6	7.7	10.1	12.2	10.7	6.9	7.0	7.0	76	67	73		2.8		2.8		2.4	5.8	5.7	5.8	74.8	

Oktober.

Datum.	Luftdruck. 8	2	7	Luft-Temperatur. Min.	8	2	7	Absolute Feuchtigkeit. 8	2	7	Relative Feuchtigk. 8	2	7	Richtung und Stärke des Windes. 8		2		7		Bewölkung. 8	2	7	Niederschl.	Bemerkungen.
1	96.5	95.3	95.4	7.4	**9.4**	9.1	8.7	**6.9**	6.1	5.9	79	71	70	SW	5	SW	6	WSW	6	10	10	8	5.5	△ u. ◍ sch. a, △ sch. p.
2	99.7	01.3	98.9	5.4	6.7	8.3	7.4	5.1	4.9	6.7	70	60	88	W	5	W	6	SW	5	9•	8	8	16.8	◍ u. △ sch. n, ◍ sch. a.
3	84.8	83.3	**81.6**	3.8	4.4	5.1	2.4	5.4	4.5	3.6	87	69	65	S	5	W	6	NW	6	10•	8	7	11.2	◍ n, △ sch. a, p.
4	95.5	96.9	87.4	-4.6	-1.1	4.7	1.9	3.9	3.5	5.1	93	55	96	N	5	N	3	SW	2	9•	8•	10•	11.3	◍ u. △ n, a, p.
5	99.7	04.0	06.4	-1.1	5.0	5.6	4.4	4.1	4.2	4.4	63	62	70	NNW	3	NNW	4	NNW	4	5	7	6	11.4	
6	01.2	98.3	95.0	2.7	4.9	4.2	2.1	4.8	5.0	4.4	73	80	82	WNW	2	ENE	3	ENE	2	9	7	7	2.1	◍ ✱ a.
7	01.7	04.1	07.2	0.9	2.4	5.5	4.6	4.7	3.3	4.3	86	49	68	E	1	N	2	N	2	6	6	6	2.4	△ u. ◍ sch. n, ◍ ✱ sch. a, p.
8	10.5	09.2	04.0	2.0	5.0	5.1	4.4	3.2	4.5	4.8	49	69	77	W	4	SW	3	SW	4	9	8	8	2.2	△ u. ◍ sch. n, ◍ ✱ sch. a, p.
9	87.8	85.3	84.0	1.8	4.8	3.9	2.0	5.6	5.3	4.8	87	87	91	W	5	W	5	WNW	7	10•	10•	8	16.5	◍ n, ◍ ✱ a, △ sch. p.
10	90.6	92.7	93.4	-1.5	1.0	2.1	1.6	4.6	4.2	4.5	92	78	87	NW	6	NW	7	NW	7	9	8	10	10.4	◍ u. ◍ ✱ sch. n, ◍ ✱ p.
11	95.0	95.7	95.2	-1.4	2.1	2.4	2.7	3.4	3.6	3.8	62	65	67	NNW	4	N	2	N	2	8	6	10	2.8	✱ n.
12	93.8	93.4	93.2	-0.6	1.0	0.7	-0.4	4.4	4.2	3.7	89	86	83	NW	5		0		0	10	10	7	2.6	✱ n, a.
13	94.9	98.3	01.3	-3.6	-2.8	0.0	-1.7	3.5	3.7	3.7	93	79	92	E	3	E	2	E	2	2	3	0	3.4	♕ von 8 p an.
14	03.9	03.7	03.3	-3.9	-3.6	-2.4	-3.5	**2.2**	2.4	2.3	63	61	63	E	3	E	3	E	1	4	4	0		
15	02.3	01.9	01.7	-6.2	-5.2	-4.3	-4.3	2.8	2.4	2.4	88	71	71	E	3	E	3		0	2	0	3		
16	01.9	02.5	03.6	-6.0	-4.8	-2.1	-3.8	2.3	3.3	2.4	70	85	69	E	2	E	1	E	1	2	2	4		
17	04.7	04.7	04.9	-5.9	-2.5	-1.1	-1.9	3.1	3.8	3.9	79	90	96	E	2	ESE	1	E	1	9*	10*	10*	0.0	✱ a, p.
18	05.7	06.8	07.6	-2.5	-2.4	-0.3	0.0	3.6	4.1	4.4	93	91	96	E	3	E	1	E	1	10	10	10*	12.3	✱ n, p.
19	08.8	06.3	04.0	-3.5	-1.4	0.6	0.4	3.5	4.1	4.7	83	84	98	E	2	E	2	E	2	7*	9	9*	5.9	✱ n, a, p.
20	98.9	98.0	98.0	-2.2	0.9	1.2	2.6	4.1	4.5	4.2	83	89	75	W	4	W	4	WSW	3	9	9	6	21.5	✱ u. △ sch. n, a, p.
21	03.6	06.1	06.3	-0.3	2.2	1.0	0.3	4.6	4.4	3.8	86	89	80	NNW	2		0	E	1	8	9	0	4.2	△ sch. n, ◍ ✱ a.
22	01.3	99.8	98.3	-1.4	0.8	1.5	1.9	4.2	3.7	3.2	86	72	60	E	5	E	4	E	3	4	3	0	5.3	
23	94.2	93.1	91.3	-0.0	3.4	4.4	4.0	4.5	4.0	3.7	76	63	61	E	3	E	2	SE	5	4	0	0		♕ von 6 p an.
24	87.8	89.2	89.1	2.8	5.8	5.8	5.6	5.8	4.1	4.2	85	60	62	ESE	5	ESE	5	ESE	5	10	6	10		
25	89.3	90.3	92.1	3.5	6.4	7.4	7.2	4.7	4.7	5.3	65	61	70	ESE	2	ESE	2	ESE	2	8	8	10		
26	95.3	98.2	99.9	4.5	6.2	7.2	6.0	4.6	4.2	4.9	65	55	70	E	5	E	3	E	2	6	6	9		
27	02.4	01.8	01.8	4.3	5.8	7.5	7.8	5.0	4.6	4.5	73	60	58	ENE	2	E	2	ENE	5	6	7	10		
28	95.0	93.5	93.7	5.3	7.1	7.8	6.2	4.7	4.6	5.6	62	59	79	E	4	E	3	SE	2	9	8	7		
29	98.4	02.0	05.0	3.9	4.4	1.4	-0.6	4.6	4.3	4.0	74	85	91	E	2	E	3	E	5	10•	10*	10*	0.0	◍ n, ◍ ✱ a, p.
30	13.7	17.1	19.9	-1.2	-1.2	-0.7	-2.0	4.0	3.5	3.6	94	80	89	E	4	E	3	E	3	0	2	2	2.5	
31	27.5	30.0	**30.1**	-4.5	-2.9	-1.9	-2.2	2.8	3.3	3.0	74	83	75	E	1	E	1	E	2	0	0	6		
M.	99.6	00.1	99.8	0.1	2.0	2.9	2.1	4.2	4.1	4.2	78	72	77		3.4		3.0		3.0	6.9	6.5	6.5	150.3	

$H = 17\,m$, $H_b = 22.4\,m$ — $\varphi = 67^0\ 17'$ N

$C_g = 1.85$ mb bei 999 mb — $\lambda = 14^0\ 24'$ E

November.

Datum.	Luftdruck. 900 oder 1000 + 8	2	7	Luft-Temperatur. Min.	8	2	7	Absolute Feuchtigkeit. 8	2	7	Relative Feuchtigk. 8	2	7	Richtung und Stärke des Windes. 8	2	7	Bewölkung. 8	2	7	Niederschl.	Bemerkungen.
1	**31.9**	31.3	30.2	-4.9	-0.9	-0.8	-2.2	3.3	3.8	3.7	75	86	93	E 3	E 4	E 4	0	0	1		
2	24.5	21.2	18.6	-5.1	-2.6	-2.0	-3.0	2.0	2.1	2.7	52	53	74	ENE 4	ENE 3	E 3	2	3	1		
3	13.7	10.3	07.3	-4.8	-3.8	-2.3	-3.0	1.7	2.0	2.0	48	50	55	E 5	E 5	E 4	1	0	0		
4	00.6	98.8	97.1	-5.6	-5.6	-4.6	-4.8	2.1	2.1	2.4	68	65	72	E 4	E 3	E 4	4	3	5		
5	90.1	90.2	91.2	-5.8	-2.0	-1.0	-1.6	3.7	4.0	3.5	94	92	85	E 3	SE 3	E 1	10*	10*	10	0.8	* n, a, p.
6	96.4	99.0	99.7	-3.6	-2.6	-1.8	-3.4	2.8	2.7	1.6	74	67	34	E 1	E 1	E 2	10	7	2	10.1	
7	00.3	00.8	00.0	-7.0	-6.0	-5.7	-6.8	1.5	2.0	2.1	50	65	77	E 2	E 2	E 2	1	1	0		
8	98.8	98.9	98.6	-6.8	-4.1	-4.5	-4.1	2.2	2.6	2.2	64	78	64	E 2	E 2	E 3	5	7	5		
9	99.5	00.7	01.3	-5.1	-3.7	-3.9	-5.4	2.1	1.8	1.5	60	52	47	E 2	E 2	E 2	1	2	2		
10	04.8	05.7	07.5	-7.8	-5.6	-4.8	-4.7	2.2	1.9	2.0	73	59	60	SSE 2	E 3	SSE 4	7	7	10		* fl. p.
11	10.5	09.6	09.0	-7.2	-3.7	1.4	3.4	3.3	4.0	4.9	94	78	83	SE 3	S 4	SW 6	10*	10	10	3.5	* n, a, ● p.
12	04.4	99.9	03.6	-3.7	4.8	7.4	6.7	5.7	6.6	7.2	89	86	99	SW 4	SW 7	SW 7	10●	10●	10●	7.0	● n, a, p.
13	09.1	12.3	12.7	4.8	6.8	**8.9**	6.8	7.0	**7.4**	**7.4**	94	87	00	SW 7	SW 6	SW 4	10●	10	10●	10.5	◍ n, a, p.
14	09.8	08.5	07.8	4.0	4.4	4.5	3.5	5.9	5.1	5.0	96	81	85	S 2	SE 2	S 2	10	10	10	14.6	● n, a.
15	11.9	13.9	13.7	2.8	4.6	3.4	3.0	5.1	4.4	4.2	81	75	74	SW 2	ESE 2	SE 2	9	7	10	3.7	◍ n.
16	12.0	10.3	09.0	2.0	3.4	4.0	4.2	4.5	4.1	5.0	76	67	80	ENE 1	E 1	E 2	9	8	10●		◍ p.
17	15.3	19.4	19.8	1.5	2.8	2.6	3.0	4.7	5.0	5.1	83	91	90	W 3	W 5	WSW 4	9	10	10●	7.0	◍ n, ◍ sch. a, ● p.
18	10.8	06.4	06.9	2.6	6.8	7.0	6.8	6.5	7.3	**7.4**	88	98	00	SSW 7	SW 8	SW 7	10●	10●	10	6.1	◍ n, a, ◍ sch. p.
19	92.3	93.4	93.0	4.1	5.8	3.9	5.1	6.4	5.3	5.5	93	87	85	WSW 4	WSW 3	WSW 3	10●	8	10	15.0	◍ n, ● sch. a, p.
20	98.2	03.2	04.4	1.8	3.8	1.8	1.6	3.7	3.3	4.2	61	63	82	NNW 5	N 5	NW 4	10	8	0	14.1	● n, ● * u. △ sch. a.
21	00.7	00.7	03.9	0.0	0.0	0.6	1.0	4.2	3.7	3.5	91	76	71	NNW 4	NW 3	N 1	10*	7	7	7.7	* n.
22	06.8	04.0	99.8	-2.4	-0.4	-0.3	-4.8	2.6	2.1	1.9	58	46	57	E 1	E 2	E 2	8	6	0		
23	98.2	98.4	96.2	-7.8	-5.8	-0.9	-3.0	2.9	3.7	3.1	95	86	83	E 2	N 3	E 2	10*	8	6	1.1	* n, a.
24	**84.1**	84.9	84.6	-5.9	-1.4	-3.1	-4.6	3.6	3.2	3.2	85	88	96	SW 5	WSW 4	NNE 4	7	9	10*	6.8	* n, p.
25	95.1	95.9	94.8	-7.6	-6.8	-6.5	-3.9	2.5	2.5	3.2	88	86	92	E 2	E 2	W 3	10*	8	10*	7.9	* n, a, p.
26	98.5	95.6	94.5	-8.2	-5.2	-4.1	-4.7	2.3	2.4	2.0	74	71	60	ENE 2	SE 2	NE 3	10*	7	5	15.9	* n, a.
27	00.2	03.0	05.2	-8.5	-6.2	-6.1	-6.1	2.0	1.9	1.6	69	64	56	E 3	E 4	E 4	3	6	3	1.0	
28	09.1	09.9	09.7	-7.8	-7.4	-8.1	-8.1	1.5	1.3	**1.2**	58	52	40	ENE 4	E 4	E 3	3	5	0		
29	07.5	07.8	07.6	-10.9	-9.9	-10.3	-12.1	1.8	1.4	1.4	81	66	73	E 4	E 5	E 3	2	3	2		
30	07.6	05.9	02.1	**-13.7**	-11.2	-10.3	-8.6	1.5	1.4	1.5	75	66	60	E 4	E 4	E 3	0	5	10*		* fl. p.
M.	04.8	04.7	04.3	-3.9	-1.7	-1.2	-1.7	3.4	3.4	3.4	76	73	74	3.2	3.5	3.3	6.7	6.5	6.0	132.8	

December.

Datum.	8	2	7	Min.	8	2	7	8	2	7	8	2	7	8	2	7	8	2	7	Niederschl.	Bemerkungen.
1	00.4	02.4	03.9	-11.2	-6.2	-8.0	-8.8	1.9	1.6	1.5	67	62	63	E 3	E 2	E 3	9	3	0	0.0	
2	03.7	07.9	11.3	-8.8	-0.2	-5.8	-6.5	4.2	2.5	2.2	91	81	77	NNW 4	E 3	E 3	5	5	0	0.0	* sch. n.
3	16.6	15.2	10.8	-9.3	-8.7	-5.4	-3.1	1.4	1.5	2.7	57	47	73	E 4	ESE 4	ESE 4	3	8	10		
4	04.5	03.9	06.4	-8.7	1.4	1.0	0.1	4.0	3.8	4.1	78	77	87	W 4	NW 6	NW 6	10△	7△	5	1.8	△ sch. n, a, p.
5	12.1	11.0	03.7	-1.4	1.6	2.7	1.1	3.8	3.3	2.8	74	59	56	NW 3	SW 3	ESE 1	9	8	10	1.2	* n.
6	74.7	88.1	98.4	-0.8	3.2	4.6	3.9	4.0	4.8	4.3	69	76	70	ESE 1	E 1	E 2	5	5	0	2.6	◍ n.
7	04.6	02.1	00.8	-1.9	2.7	1.1	**7.5**	3.9	4.8	5.2	70	96	68	W 2	SSE 1	SW 4	10	8●*	10		● * a, p.
8	00.4	98.7	99.0	-1.0	4.2	5.6	5.1	5.4	5.3	5.1	87	79	78	NE 1	ESE 1	0	9	8	10	6.4	● n.
9	97.1	95.6	93.1	3.8	7.2	6.2	5.3	4.8	4.7	**6.6**	64	66	99	E 2	E 2	ESE 2	6	6	10		
10	93.0	93.1	93.3	2.0	2.0	1.4	1.0	3.6	3.7	4.0	68	72	81	ESE 1	SE 4	E 5	7	10	10		
11	94.2	95.8	96.8	-1.3	-0.6	-0.4	-0.4	4.2	4.1	4.3	95	91	95	NE 3	E 3	NE 3	10*	10	10*	2.3	* n, a, p.
12	99.6	99.1	99.7	-5.9	-5.2	-5.4	-5.4	2.8	2.4	2.4	88	77	77	NE 3	E 3	NE 3	10*	10	10	1.9	* n, a.
13	02.5	06.0	09.5	-6.4	-4.4	-5.4	-6.8	1.9	1.8	2.1	56	58	74	E 3	NE 2	E 3	4	3	0	0.0	
14	12.2	16.8	18.1	-9.2	-9.2	-10.5	-11.3	1.2	1.2	1.3	52	58	67	ENE 2	E 3	E 3	0	1	0		
15	**18.5**	16.7	12.5	-12.5	-11.3	-11.1	-11.1	1.3	**1.1**	**1.1**	67	53	53	E 2	ESE 2	ESE 2	0	4	0		
16	97.3	97.1	96.2	-11.5	-9.2	-8.5	-8.9	1.7	2.2	1.7	72	89	72	E 5	E 4	E 4	10	10*	10	0.0	* n, a, p.
17	91.4	92.0	91.8	-9.6	-8.9	-10.2	-11.1	1.7	1.5	1.5	69	69	75	E 4	E 3	E 4	1	4	10	6.2	* n.
18	93.4	95.6	96.7	-11.4	-11.4	-9.5	-10.1	1.3	1.2	1.7	67	54	77	NE 1	ENE 2	E 1	1	2	0		
19	93.8	90.7	89.0	-12.8	-11.8	-9.6	-8.9	1.3	1.8	2.0	66	81	82	E 2	E 2	E 2	3	9	9		* fl. a, * p.
20	87.3	87.6	89.8	**-13.9**	-7.4	-6.4	-6.6	1.5	1.6	2.5	58	55	89	NE 3	E 4	E 5	7	10	10*	2.6	* p.
21	96.0	99.8	00.9	-8.6	-7.4	-6.9	-5.8	1.4	2.5	2.6	52	88	87	E 6	E 5	E 5	2	2	10	0.4	* fl. n.
22	95.6	92.2	89.4	-7.4	-6.6	-7.6	-8.1	1.7	1.7	1.7	60	66	68	SE 5	E 6	E 6	10	9	10		
23	89.5	89.0	88.7	-9.5	-7.4	-5.7	-3.2	1.9	1.7	3.2	69	57	88	E 6	SE 5	SE 6	5	7	9		
24	87.1	86.4	85.7	-10.0	-3.0	-3.1	-1.6	2.7	2.7	3.5	74	73	85	E 6	ESE 5	ESE 5	10	8	9		
25	85.2	85.6	84.7	-3.6	-2.5	-3.6	-3.2	3.6	3.0	2.9	93	85	80	E 3	E 4	E 2	7	9	6		
26	85.2	87.1	89.8	-3.9	-2.4	-3.6	-2.6	3.1	2.9	3.0	79	82	79	E 1	SE 1	E 1	4	4	9		
27	90.4	91.1	89.9	-4.3	-1.3	-1.0	-2.7	3.9	3.7	3.4	92	86	91	E 3	E 2	E 2	8	5	5		
28	89.3	88.7	88.0	-2.8	-2.8	-3.6	-3.9	3.1	1.9	1.8	83	53	52	E 2	E 3	E 4	4	4	9		
29	85.7	83.0	78.9	-5.2	-3.8	-4.8	-2.9	1.8	1.9	1.9	53	59	51	E 5	ESE 5	ESE 5	5	5	4		
30	67.0	63.0	**62.8**	-5.4	-0.4	-1.4	-1.3	3.3	3.1	3.4	74	74	81	SE 6	SE 6	SE 5	9	8	10		
31	69.3	72.2	77.8	-5.4	-3.8	-3.2	2.2	2.3	2.8	3.7	67	76	68	SE 3	SE 3	ESE 3	10	9	10*		* fl. p.
M.	94.8	95.3	95.4	-6.4	-3.7	-3.8	-3.5	2.7	2.7	2.9	71	71	76	3.2	3.2	3.4	6.2	6.5	6.9	25.4	

$H = 7$ m, $H_b = 9.8$ m — $\varphi = 69^0\ 58'$ N

$C_g = 1.95$ mb bei 985 mb — $\lambda = 23^0\ 15'$ E

Januar.

Datum.	Luftdruck. 900 oder 1000 + 8	2	7	Luft-Temperatur. Min.	8	2	7	Absolute Feuchtigkeit. 8	2	7	Relative Feuchtigk. 8	2	7	Richtung und Stärke des Windes. 8	2	7	Bewölkung. 8	2	7	Niederschl.	Bemerkungen.
1	83.8	85.8	85.8	-7.0	-6.6	-7.3	-4.2	2.4	2.3	2.3	86	86	70	E 3	ESE 2	SSE 2	0	1	3		
2	79.0	77.3	73.4	-8.5	1.0	0.7	0.7	3.6	3.4	3.7	73	71	76	0	SSE 2	SSW 4	10	8	10*		✱⁰ p.
3	66.2	65.7	68.0	-0.5	0.5	0.8	0.8	3.5	3.7	3.7	74	77	76	SSW 2	SSW 2	SSW 2	9	9	9	0.0	✱⁰ n.
4	72.4	73.5	74.0	-1.6	-0.8	-1.0	-1.5	3.4	3.3	3.2	78	78	78	SSW 1	0	0	10	9	9		
5	75.8	78.6	80.9	-4.3	-3.8	-4.7	-5.3	2.8	2.5	2.5	79	78	79	0	SSW 2	0	9	9	9		
6	85.3	88.3	90.6	-12.3	-12.0	-13.7	-12.3	1.7	1.4	1.6	89	88	87	E 2	ESE 3	ESE 3	1	4	9	0.1	✱⁰ n.
7	93.9	95.0	95.8	**-15.1**	-7.7	-6.2	-9.8	2.3	2.8	2.2	89	97	99	ESE 3	0	0	9	10	9		
8	97.4	97.9	96.9	-11.5	-8.9	-7.8	-6.8	2.0	2.0	2.1	87	79	75	E 3	E 1	0	3	9	9		
9	94.3	95.6	96.6	-10.5	-6.8	-8.9	-11.4	2.1	1.8	1.5	77	76	76	SSE 1	0	0	9	7	4	0.1	✱⁰ n.
10	02.0	01.7	99.4	-12.2	-10.0	-10.4	-10.2	1.6	1.6	1.6	76	77	74	SE 2	ESE 1	E 1	9	4	5		✱⁰ a.
11	00.0	98.0	93.4	-14.1	-12.0	-9.1	-6.7	**1.4**	1.7	1.9	73	72	70	0	ESE 2	SSE 3	9	9	10	0.1	
12	93.7	92.8	89.8	-12.7	5.2	4.2	**8.7**	4.3	4.0	4.4	65	65	53	SSW 1	E 2	WSW 5	9	9	1	0.1	✱⁰ n.
13	92.5	96.6	01.5	1.8	3.2	2.4	0.0	4.3	3.7	3.0	74	68	65	SW 4	WSW 5	W 3	10	6	4	0.1	●⁰ n.
14	01.3	90.7	78.4	-5.4	-3.4	-0.1	3.4	2.3	3.3	4.3	63	73	74	E 3	SE 2	SSW 3	10	9	10●		●⁰ p.
15	58.0	**55.5**	57.8	-4.2	4.3	6.3	3.3	4.2	4.2	4.3	69	59	74	WSW 3	SW 2	SSW 2	9	6	10	0.0	●⁰ n.
16	84.9	78.8	71.8	-3.8	-2.9	-4.7	-2.9	2.6	2.6	2.7	70	82	72	SSW 3	ESE 2	SE 3	4	10*	1		✱⁰ a, p.
17	82.5	94.8	02.1	-5.6	2.0	-1.0	-1.4	3.3	3.5	3.7	63	83	91	W 5	W 7	0	8	10*	10*	0.6	✱⁰ n, a, p.
18	89.7	86.6	88.2	-3.5	4.2	4.9	2.7	3.9	4.2	3.8	63	64	69	SW 4	SSW 5	SW 6	5	10	10*	0.2	✱⁰ n, p.
19	86.5	91.7	05.6	-3.8	-2.9	-1.1	-3.6	2.7	3.5	2.6	72	83	72	E 3	W 8	W 9	10*	10*	10*	0.2	✱⁰ n, ✱ a, ✱⁰ p.
20	09.7	08.1	06.8	-5.7	-3.4	4.6	7.3	3.4	5.0	5.7	95	80	74	ESE 2	WSW 10	WSW 8	10*	10●	10	4.3	✱ n, ✱ u. ●⁰ a, p.
21	08.0	12.4	16.9	-3.4	8.2	6.0	3.3	**6.1**	5.9	5.3	76	86	92	W 8	NNW 3	ESE 2	10●	10	10●	5.9	●⁰ n, a, ● p.
22	22.3	22.5	22.0	3.2	7.2	6.0	5.6	5.7	5.3	4.9	76	76	73	SW 3	SE 1	S 3	9●	9	8	3.4	●⁰ n.
23	15.7	14.4	14.0	-2.4	-2.0	-3.7	-4.9	3.4	2.9	2.7	86	82	83	E 2	E 1	E 1	2	5	8		
24	13.7	19.3	20.3	-4.9	4.0	1.8	1.2	4.5	4.4	3.6	73	84	71	SW 3	SW 3	SW 2	7	10*	5*		●⁰ a, ✱⁰ p.
25	18.6	22.9	**25.9**	-1.4	-1.4	-2.4	-2.5	3.9	3.0	2.8	94	77	72	W 4	NW 7	W 6	10*	10*	10*	2.5	✱⁰ a, a, p.
26	22.4	16.8	12.8	-4.6	-3.0	-2.4	3.6	3.6	3.9	5.9	97	00	00	SE 2	ESE 2	NW 3	10*	10*	10●	2.7	✱ n, a, ✱² u. ●⁰ p.
27	12.0	13.7	13.6	-3.0	5.3	4.6	4.7	5.5	5.3	5.4	83	84	85	WNW 5	NW 5	NW 4	10	9●	8	14.4	●⁰ n, a, p.
28	12.7	14.1	14.1	3.5	4.9	4.3	4.0	4.8	5.0	4.8	74	81	78	W 3	WSW 3	SE 1	9	9	9	0.0	
29	11.7	08.6	05.0	0.4	1.0	-3.0	-4.0	4.0	3.0	2.8	82	81	83	SE 1	SSE 1	SSW 1	8	4	4		
30	97.5	95.9	94.8	-4.6	-4.0	-1.7	-2.0	2.7	3.2	3.1	81	79	79	SSE 2	SSE 2	SSE 2	7	9	7		
31	89.3	87.7	87.1	-4.0	-2.4	-1.7	-1.1	3.1	3.3	3.5	81	81	82	SSW 1	SSW 1	SSW 1	9	9	9		
M.	95.9	96.2	96.2	-5.2	-1.4	-1.4	-1.3	3.4	3.4	3.4	78	79	78	2.6	2.8	2.6	7.9	8.2	7.7	34.7	

Februar.

Datum.	Luftdruck. 900 oder 1000 + 8	2	7	Luft-Temperatur. Min.	8	2	7	Absolute Feuchtigkeit. 8	2	7	Relative Feuchtigk. 8	2	7	Richtung und Stärke des Windes. 8	2	7	Bewölkung. 8	2	7	Niederschl.	Bemerkungen.
1	87.1	89.4	91.0	-2.7	0.2	-0.3	-1.0	3.7	3.6	3.4	79	82	81	SSW 2	SSE 1	W 1	9	7	4		
2	93.8	92.3	89.9	-6.1	-4.6	-1.4	-0.9	2.8	3.2	3.2	86	77	74	E 1	SE 1	SE 1	7	8	8		
3	84.2	83.8	83.3	-9.0	-5.8	-5.6	-5.0	2.4	2.6	2.7	79	86	85	0	0	SE 1	9	4	8		
4	80.4	81.0	81.1	-6.9	-2.7	-5.5	-7.3	2.9	2.5	2.3	77	83	86	E 3	SE 2	E 1	9	8	9		
5	78.4	74.0	67.9	-9.5	-5.5	-3.3	-5.3	2.6	2.6	2.5	86	72	80	E 2	SE 1	SSE 2	8	9	8	0.0	✱⁰ n.
6	**64.6**	68.1	73.4	-6.1	-1.3	-4.3	-4.0	2.7	2.3	3.1	64	70	90	SE 2	E 1	0	9	9	9		✱ p.
7	84.1	88.4	90.6	-10.3	-8.5	-9.5	-8.6	2.3	1.8	1.8	93	80	73	SE 3	ESE 3	ESE 3	8	5	9	3.0	✱⁰ n.
8	93.2	93.1	88.6	-11.7	-5.0	-5.6	-8.0	2.0	1.6	1.7	62	54	68	SE 3	SE 1	SSW 3	5	9	9		
9	80.3	77.5	78.8	-9.6	-0.8	0.2	-1.1	3.3	3.5	3.4	77	76	79	SE 3	SSW 5	SSW 3	9	9	10		
10	78.4	80.8	83.0	-3.3	-2.7	-2.0	-1.1	3.0	3.3	3.5	79	82	82	SSE 3	SE 2	SE 1	9	8	10		
11	83.3	84.0	83.3	-3.4	-2.9	-5.3	-4.0	2.8	2.7	2.9	78	87	84	SSE 2	SSE 1	0	5	8	10		✱⁰ a.
12	85.4	88.7	89.0	-5.7	-3.1	-5.0	-7.7	3.1	2.6	2.0	85	81	80	0	0	SE 1	10	1	9	0.6	✱⁰ n.
13	71.7	76.2	83.2	-9.2	2.3	3.4	2.4	**4.6**	4.0	3.4	84	69	62	SE 3	SSW 1	SSW 1	9	9	4	1.4	✱ n.
14	92.3	98.5	03.0	-2.7	1.4	**5.2**	3.4	3.4	3.8	3.6	67	57	62	SE 1	SSW 3	0	9	9	4		
15	09.4	10.1	09.2	-6.5	-6.1	-6.6	-6.8	2.3	2.2	2.3	78	79	82	E 1	E 1	E 1	7	9	5		
16	06.1	07.5	08.3	-7.2	-5.2	-2.9	-1.0	3.0	3.6	4.2	97	99	98	ESE 3	SE 2	SE 1	10*	10*	9	3.0	✱⁰ n, ✱ a, p.
17	10.3	10.9	10.5	-7.2	-4.1	0.1	0.4	3.0	3.9	3.6	89	83	76	E 3	W 2	W 3	9	8	8	3.6	✱⁰ n.
18	06.4	07.8	09.9	-5.1	-3.8	-0.7	-2.3	3.1	3.7	3.1	91	84	81	SE 3	NE 2	NE 2	9	8	5	0.2	✱⁰ n.
19	10.7	09.6	08.7	-10.4	-10.0	-5.1	-6.8	1.9	2.6	2.6	90	84	91	E 3	ESE 2	E 2	8	8	8		
20	08.3	08.9	11.3	-10.3	-9.1	-9.2	-11.8	2.2	2.0	1.6	93	88	85	ESE 3	SE 2	ESE 2	7	7	9	2.8	✱ n.
21	14.1	13.1	10.8	-17.3	-16.7	-11.6	-13.5	1.1	1.4	1.2	86	74	73	ESE 2	0	ENE 2	1	9	2		
22	10.8	12.7	13.8	-19.3	-16.9	-14.5	-13.5	0.9	1.3	1.5	77	83	89	ESE 3	E 3	ESE 3	10*	6	2	0.2	✱⁰ n, a, p.
23	15.0	15.8	16.1	-17.3	-14.4	-10.4	-15.5	1.1	1.3	1.0	76	63	69	E 3	ESE 3	ESE 3	3	8	2	1.2	
24	22.2	25.8	26.9	**-20.3**	-19.3	-14.2	-16.3	**0.7**	1.0	1.0	72	64	78	E 3	E 3	E 3	3	6	0		♖ 7 p.
25	28.1	**28.4**	27.8	-20.0	-19.0	-11.4	-15.2	0.9	1.5	1.2	82	74	82	ESE 3	ESE 3	ESE 3	7	7	2		
26	23.6	23.4	23.0	-19.1	-15.0	-12.8	-16.0	1.3	1.3	1.2	87	74	84	E 3	ESE 3	ESE 3	7	2	0		
27	23.5	24.1	23.6	-19.3	-18.8	-10.9	-15.6	0.9	1.4	1.1	86	70	81	E 3	0	0	0	1	3		
28	22.3	21.8	22.4	-19.4	-9.4	-7.2	-9.0	1.7	2.0	1.8	76	73	76	SE 1	SE 1	0	9	9	6		
M.	98.9	99.8	00.3	-10.6	-7.4	-5.6	-6.8	2.3	2.5	2.4	81	77	80	2.3	1.8	1.6	7.3	7.2	6.1	16.0	

$H = 7$ m, $H_b = 9.8$ m
$C_g = 1.95$ mb bei 985 mb

$\varphi = 69^0\ 58'$ N
$\lambda = 23^0\ 15'$ E

März.

Datum.	Luftdruck. 900 oder 1000 + 8	2	7	Luft-Temperatur. Min.	8	2	7	Absolute Feuchtigkeit. 8	2	7	Relative Feuchtigk. 8	2	7	Richtung und Stärke des Windes. 8	2	7	Bewölkung. 8	2	7	Niederschl.	Bemerkungen.
1	21.9	20.4	19.7	-14.9	-13.8	-14.3	-16.5	1.3	1.1	1.0	78	72	77	0 SE	1 SE	1	9	6	6		
2	16.9	16.0	15.4	-17.7	-15.8	-12.1	-14.6	1.0	1.3	1.2	77	72	78	0	0	0	7	8	2		
3	14.8	12.0	08.3	-16.2	-12.8	-6.2	-7.2	1.5	2.2	2.3	84	75	86	SE 2 E	2 ESE	2	4	9	10		
4	98.2	96.7	96.2	-18.0	-8.3	-7.2	-7.4	2.4	2.6	2.7	97	97	00	0	0 SE	1	10*	10*	10*	0.6	✱ n, a, p.
5	97.8	96.1	95.6	-12.0	-11.5	-12.2	-14.4	1.9	1.4	1.3	98	79	82	0 SE	2 SSW	3	10*	7	9	9.5	✱ n, ✱⁰ a.
6	98.8	98.5	98.0	-24.0	-23.5	-16.0	-22.4	**0.6**	1.0	**0.6**	88	71	83	E 3 ESE	2 ESE	3	2	5	7	0.2	
7	96.5	97.0	97.9	**-27.2**	-16.9	-13.3	-15.2	1.1	1.3	1.3	90	81	88	SE 1 SSW	2 ESE	1	10*	10	9	0.1	✱⁰ n, a.
8	03.4	04.3	05.1	-19.3	-14.3	-8.8	-8.6	1.4	1.9	2.0	88	82	84	ESE 2 E	2	0	8*	9	9	0.3	✱⁰ n, a.
9	09.3	11.5	13.6	-14.9	-9.0	-7.7	-15.0	1.9	2.0	1.4	82	77	92	0 E	2 ESE	3	9	7	3	0.0	
10	19.1	21.5	23.2	-19.6	-14.5	-10.4	-15.4	1.5	2.0	1.4	97	94	95	ESE 3 ENE	2 ESE	3	9	2	4		
11	27.9	29.7	31.6	-19.0	-16.5	-8.8	-14.0	1.2	1.6	1.2	89	68	77	ESE 3 SE	1 ESE	2	9	2	2		
12	34.3	34.9	**35.6**	-17.7	-14.2	-5.8	-12.0	1.6	2.6	1.8	00	87	99	ESE 3 ENE	2 ESE	3	8	8	2		
13	31.5	27.0	23.3	-19.7	-7.6	-5.0	-6.3	2.5	2.5	2.5	95	77	87	ESE 1	0 NE	2	9	10	10		✱⁰ p.
14	22.0	23.5	25.5	-11.1	-10.7	-9.8	-10.8	1.6	1.6	1.6	77	76	79	0	0	0	3	9	10	0.1	✱⁰ p.
15	29.7	30.7	31.1	-12.8	-10.4	-9.4	-15.8	1.8	1.6	1.1	85	73	80	SE 2 ESE	2 E	3	8	1	0	0.0	
16	29.8	24.7	20.2	-23.8	-17.9	-6.6	-13.6	1.0	1.7	1.1	83	61	67	SE 3 SE	1 ESE	2	2	0	0		
17	13.9	14.0	14.3	-18.2	-13.6	-10.5	-15.5	1.2	1.4	1.1	78	66	77	SE 1 E	1 ESE	1	1	0	1		
18	01.4	98.8	97.0	-17.9	-7.1	0.3	-4.0	2.2	3.1	3.1	79	66	90	SSE 2 SE	1 ESE	2	8	8	2		✱ p.
19	92.4	92.1	88.9	-7.1	0.4	**0.6**	-1.7	3.3	3.1	2.8	70	65	71	SSW 1 SSW	1	0	8	9	9	0.2	
20	87.8	89.7	92.4	-8.6	-7.2	-0.9	-3.0	2.4	3.3	3.2	88	77	86	ESE 2 ENE	1 ENE	2	9	9	8		
21	98.0	00.4	01.8	-7.2	-1.2	0.4	-1.5	3.4	**4.3**	3.7	82	90	90	W 3 NW	4 NW	3	10	8	10*	0.1	✱⁰ n, ✱ a, ✱⁰ p.
22	05.1	06.3	06.2	-2.7	-2.2	-0.9	-5.3	3.7	3.6	2.8	95	85	90	SW 1 WNW	2 SSE	3	9	8	3	0.7	✱⁰ n, ✱⁰ sch. a.
23	06.7	08.1	09.2	-12.9	-9.3	-1.0	-9.2	2.0	2.9	1.8	89	67	75	SE 2	0 ESE	2	8	4	1	0.1	
24	09.9	10.1	11.4	-13.7	-10.1	-6.2	-11.3	1.6	1.9	1.6	76	68	78	ENE 2 ESE	2 ESE	2	8	0	1		
25	12.5	12.7	13.3	-16.3	-10.3	-2.2	-8.6	1.8	2.7	1.9	86	69	79	ESE 2	0 ESE	2	8	7	6		
26	16.8	18.0	19.6	-16.3	-13.4	-2.5	-7.4	1.3	2.4	1.9	81	64	73	ESE 3 ENE	1 ESE	3	4	1	1		
27	21.7	20.6	19.1	-13.7	-9.0	-5.2	-7.9	1.9	2.4	2.1	81	79	83	SE 2 SSW	3	0	3	8	9		
28	16.8	17.7	17.6	-9.4	-4.5	-6.0	-7.2	2.7	2.2	1.9	82	73	70	SW 4 SSW	3 SE	3	10	10	10	0.0	✱⁰ n.
29	18.8	17.1	15.3	-13.1	-11.6	-11.1	-11.2	1.3	1.2	1.3	69	63	67	SSW 3 SSW	3	0	9	9	9		
30	03.5	96.2	91.0	-12.2	-10.1	-9.4	-11.4	1.8	1.8	1.5	83	80	75	SSE 2 SSW	3 SSE	3	10*	5	1	0.2	✱ n, ✱⁰ a.
31	79.6	**78.1**	81.1	-12.0	-7.9	-5.6	-5.1	2.3	2.8	2.7	90	93	85	0 SE	1 E	3	9	9	9	0.1	✱ a.
M.	10.9	10.5	10.3	-15.0	-10.8	-6.9	-10.3	1.8	2.2	1.9	85	76	82	1.7	1.5	1.9	7.4	6.4	5.6	12.2	

April.

Datum.	8	2	7	Min.	8	2	7	8	2	7	8	2	7	8	2	7	8	2	7	Niederschl.	Bemerkungen.
1	**89.6**	92.5	94.5	-7.9	-1.2	0.0	-2.6	3.9	4.1	2.9	92	89	77	SE 2 ENE	2 ENE	3	9	9	9	0.3	
2	96.9	98.7	97.8	-9.3	-5.5	-0.9	-4.2	**1.6**	2.3	2.8	52	53	84	ENE 1 SSE	1 SSW	2	8	8	9		
3	90.3	90.5	90.0	-9.8	0.2	1.1	-1.5	4.4	2.8	3.8	94	56	92	0	0 WNW	3	9	9	10*		✱⁰ p.
4	96.6	06.1	11.6	-3.5	-2.8	-1.7	-3.7	3.4	3.7	3.3	91	92	94	NNE 4 NW	5 WNW	3	10*	7	9	3.0	✱⁰ n, a, p.
5	05.4	94.3	91.1	**-10.0**	-5.0	2.0	4.0	2.2	4.0	4.0	71	76	67	S 4 S	5 SW	6	0	10	10●	0.1	✱⁰ a, ●⁰ p.
6	15.9	16.0	12.7	-5.0	-0.5	1.6	-1.0	4.0	3.8	2.9	89	75	68	SE 2 S	3 S	3	5*	1	6	0.0	✱⁰ n.
7	05.0	09.0	12.8	-1.5	5.0	1.3	0.9	5.7	4.8	4.2	87	94	86	WSW 4 NW	6 WSW	4	7	8●	9		● ✱⁰ a.
8	16.8	15.0	11.0	-1.5	1.6	3.0	4.7	3.5	3.4	4.3	68	60	67	SW 4 E	1 SE	2	9	9	0	0.0	
9	05.1	07.1	09.3	1.0	7.0	6.7	5.4	5.1	5.7	4.6	69	79	69	SW 3 W	6 W	5	9	6	9		
10	19.5	25.4	28.0	0.2	0.2	0.8	0.3	4.5	4.3	4.2	96	88	90	NE 3 NE	3 E	2	10*	10	10	1.2	✱⁰ n, a.
11	24.3	20.6	19.0	-0.7	0.3	2.7	3.2	4.6	4.8	5.0	98	86	87	0	0 SE	2	10*	10	10	0.1	✱⁰ n, a.
12	12.8	12.2	10.8	0.3	5.0	5.3	3.3	5.8	6.1	5.5	89	92	95	E 1 NW	3 E	3	9	10	10	0.2	●⁰ a.
13	13.1	12.2	11.8	2.4	3.4	6.4	4.3	5.3	5.3	4.7	87	74	76	E 1 W	2 E	1	8	2	9	0.0	●⁰ n.
14	11.9	11.5	11.4	-1.9	2.1	**8.4**	3.6	5.0	6.4	5.2	93	78	88	0 S	2 E	1	9	2	1		
15	08.0	04.9	02.5	-1.2	4.1	8.0	4.7	5.3	4.8	5.9	87	60	92	E 3 SW	4 E	1	6	5	1		
16	97.3	96.3	96.0	0.5	4.5	7.8	5.0	5.6	**7.0**	5.9	89	89	90	SE 3 S	1 S	3	10	8	9		
17	93.7	94.1	94.8	2.6	6.1	7.3	4.6	4.4	4.5	4.2	63	60	67	SW 4 S	3 S	1	7	8	10		
18	92.4	93.4	95.5	2.1	2.6	3.4	4.2	3.9	3.9	4.6	71	67	73	W 3 SW	1 W	4	10●	10	7	2.8	●⁰ n, a.
19	99.5	05.4	07.2	1.1	2.1	2.3	0.8	5.2	4.9	4.3	98	89	88	NW 3 NW	2 W	2	10●	10	8	1.6	●⁰ n, ✱⁰ p.
20	11.2	11.3	10.3	-2.3	-0.2	2.2	0.1	4.4	3.6	2.9	97	66	58	SE 1 ENE	2	0	10*	10*	4	0.5	✱⁰ n, a, p.
21	07.2	07.8	08.3	-2.6	2.1	4.0	4.1	4.1	5.2	4.1	77	85	68	0	0	0	9	10●	4	0.0	●⁰ a, p.
22	12.1	12.3	11.4	-2.1	1.0	4.3	2.4	3.3	5.7	3.7	67	92	68	SE 1 SE	3 SE	3	7	7	10	0.0	
23	11.0	10.2	09.9	-1.4	1.1	3.3	1.0	3.7	3.1	3.7	73	53	75	SW 4 S	5 S	4	3	3	3		
24	12.2	08.8	06.9	-6.8	-3.8	-0.1	-1.0	3.0	3.2	3.3	84	71	78	S 3 S	3 S	2	10	9	10*		✱⁰ p.
25	97.1	94.8	93.5	-4.5	-2.5	-1.6	-1.5	3.6	3.8	3.8	93	92	92	E 1 SW	1 E	1	10*	10*	10	0.0	✱⁰ n, a, p.
26	94.5	98.9	03.1	-8.7	1.3	1.3	0.2	4.7	4.6	4.2	92	91	90	0 NNW	2 NNW	2	6	10△	10*	1.1	✱⁰ n, ✱⁰ sch. a, ✱⁰ p.
27	12.2	15.4	16.8	-2.5	-0.7	0.5	-2.1	4.0	3.2	3.3	91	66	82	NNW 2 NE	2	0	10*	9	8	0.5	✱⁰ n, a.
28	17.2	17.9	18.3	-7.8	-2.6	-0.1	-2.5	2.9	3.5	3.8	77	77	98	0 WNW	2 SE	2	4	3	9*	0.0	✱ p.
29	23.5	26.2	27.5	-5.0	-1.2	1.4	-0.9	4.2	4.4	3.5	00	87	82	0 W	3	0	9*	9	8	3.8	✱ n, a.
30	**28.1**	26.1	24.4	-8.4	-1.4	0.8	-0.2	4.1	2.9	2.6	99	59	56	SSE 2 E	2	0	6	9	7	0.6	
M.	07.3	07.8	07.9	-3.1	0.7	2.7	1.2	4.2	4.3	4.0	84	76	80	2.0	2.5	2.2	8.0	7.7	7.6	15.8	

$H = 7$ m, $H_b = 9.8$ m — $\varphi = 69^0\ 58'$ N

$C_g = 1.95$ mb bei 985 mb — $\lambda = 23^0\ 15'$ E

Mai.

Datum.	Luftdruck, 900 oder 1000 + 8	2	7	Luft-Temperatur. Min.	8	2	7	Absolute Feuchtigkeit. 8	2	7	Relative Feuchtigk. 8	2	7	Richtung und Stärke des Windes. 8		2		7		Bewölkung. 8	2	7	Niederschl.	Bemerkungen.
1	18.6	13.1	09.8	-3.0	-0.3	-0.4	-1.0	3.8	4.3	3.9	85	95	90	NE	2	NNE	1		0	9	10*	10*		* a, p.
2	03.3	04.5	05.8	-2.0	-1.4	2.2	4.2	4.1	4.7	5.2	00	87	85		0	SE	2	WSW	3	10*	10*	9	7.8	*² n, a, * p.
3	14.5	17.6	17.8	-1.4	4.4	5.7	4.7	4.9	4.8	5.0	79	70	78	W	2	W	3	SSW	2	7	3	7	0.5	
4	11.0	07.0	06.5	-0.1	2.9	6.3	5.0	5.5	6.2	6.4	98	87	98		0	SSE	1		0	10•	9	10•	1.4	*⁰ u. ●⁰ n, ●⁰ a, ● p.
5	11.2	16.4	18.7	1.3	2.0	2.0	-0.2	5.3	4.0	4.5	00	75	00	NW	5	NW	5	N	4	10*	10	10*	0.7	●⁰ n, a, *² sch. p.
6	21.2	21.5	21.9	-0.8	0.7	0.8	0.0	3.8	3.6	3.9	78	73	85		0	WNW	2	SW	1	10*	9	7	0.5	*⁰ sch. n, * sch. a, p.
7	23.0	**23.7**	23.0	-3.9	0.4	0.9	0.8	4.0	4.5	4.2	84	92	86		0	WSW	2		0	5	8	6	0.2	* sch. n, a.
8	17.8	17.5	17.9	-5.5	0.0	3.1	1.8	3.5	5.0	4.1	76	88	78	SW	1	N	1	NE	1	6	3	3	0.0	
9	15.4	13.0	09.6	-4.9	1.2	5.6	7.7	3.7	5.3	5.4	73	79	69	SE	2	S	3		0	3	9	9		
10	07.1	10.8	11.0	1.2	9.7	8.3	5.5	3.9	5.6	5.2	44	69	77		0	NNW	1	WNW	2	4	8	7		
11	14.7	17.5	17.5	3.2	3.7	4.7	5.2	4.4	4.3	4.1	73	67	61	WNW	2	NW	1		0	9	9	8		
12	14.0	12.1	11.0	1.0	6.5	7.7	6.2	4.4	4.7	4.7	62	60	66	SSE	2	SSE	3	SW	2	6	8	7		
13	10.2	10.9	11.3	3.3	6.4	8.8	6.4	5.0	5.3	5.1	69	63	71		0	NW	2	WSW	1	6	9	9		
14	11.1	12.1	13.6	2.9	7.2	9.5	7.2	6.1	6.3	6.5	80	71	86	W	1	WSW	1		0	7	8	7	0.5	●⁰ n, p.
15	15.1	15.7	15.9	0.8	7.0	7.2	7.0	6.0	5.6	4.9	79	74	66		0	NNW	1	ENE	2	9	7	8	0.1	●⁰ n.
16	17.1	18.0	19.6	1.0	5.7	8.0	6.8	5.3	6.1	5.6	78	76	76	W	1	W	2		0	8	7	8		
17	22.4	20.8	19.0	1.2	6.8	11.6	10.2	5.7	4.2	5.6	77	41	60	WNW	1	S	3		0	6	2	3	0.0	●⁰ n.
18	09.6	10.0	11.3	5.5	10.6	13.0	8.8	4.8	4.6	4.8	50	41	56	SE	3	WSW	6	WSW	6	9	2	7		
19	15.7	17.2	16.8	4.3	4.8	4.1	4.6	5.0	4.5	3.9	78	74	62	NNW	2	NNW	4	W	6	9	9	7		
20	14.1	13.6	14.0	0.5	1.3	2.4	1.5	4.7	4.4	3.7	92	80	72	NE	2	W	2	NW	2	10•*	9	10*	0.4	● * n, *⁰ a, * p.
21	14.4	13.0	12.3	-1.2	0.5	2.4	1.2	4.4	3.3	4.8	92	60	96	E	2	ENE	2	NE	1	9*	9	9	0.8	*⁰ n, * a.
22	12.9	13.7	14.7	-2.1	0.9	1.6	-0.2	3.4	4.0	3.5	69	78	78	NNE	2	NE	2	ENE	2	9	10	8	0.3	*⁰ p.
23	15.1	14.9	14.8	-1.7	-0.2	0.5	0.0	3.3	4.2	3.9	73	88	85	NW	3	WNW	2		0	10	9	9△	0.0	* a, △² p.
24	14.7	14.2	14.0	-2.1	0.0	1.3	1.8	3.5	2.9	3.5	76	57	67		0	WNW	2	NW	1	9	9	8*	0.9	△ n, p.
25	11.0	10.4	11.7	-2.9	4.2	5.5	2.9	4.1	3.1	4.2	66	46	74		0	W	3	NE	2	7	9	7	0.7	△⁰ n, *⁰ p.
26	14.2	15.1	16.0	0.[illegible]	2.7	3.4	2.4	3.4	3.3	**2.8**	62	57	51		0	WNW	3	NW	3	4	7	4	0.0	
27	17.4	17.8	16.3	-0.1	2.4	5.4	5.3	3.6	2.9	3.3	65	43	48	N	1	NE	3		0	10	5	8		
28	12.2	11.7	11.6	2.4	9.4	13.9	12.4	4.5	4.8	6.2	51	41	58	SW	1	SW	4	SW	4	4	3	2		
29	09.0	09.7	11.1	3.8	11.8	13.8	10.5	6.8	5.8	6.8	66	50	72	SW	4	SW	4	SW	1	7	9	10		
30	10.3	07.3	06.1	6.6	11.1	**20.0**	18.2	7.1	**9.4**	9.2	72	54	59	SW	1	SW	3	S	3	1	9	9		
31	04.0	02.4	**01.9**	6.3	13.3	19.0	15.1	7.8	7.8	8.1	68	48	63	E	2	SW	4		0	7	6	5		
M.	13.6	13.7	13.6	0.6	4.4	6.4	5.2	4.7	4.8	4.9	75	67	73		1.4		2.5		1.6	7.4	7.6	7.4	14.8	

Juni.

Datum.	Luftdruck, 900 oder 1000 + 8	2	7	Luft-Temperatur. Min.	8	2	7	Absolute Feuchtigkeit. 8	2	7	Relative Feuchtigk. 8	2	7	Richtung und Stärke des Windes. 8		2		7		Bewölkung. 8	2	7	Niederschl.	Bemerkungen.
1	01.6	03.3	05.8	8.3	10.8	13.7	10.3	8.0	8.3	7.0	83	71	75	E	2	NE	2	N	3	10	9	10	0.0	●⁰ n.
2	10.6	12.6	13.1	7.1	8.4	10.4	8.8	7.3	7.1	6.7	89	75	80		0		0	W	1	10•	9	9	4.4	● n, ●⁰ a, p.
3	14.3	14.5	14.3	6.1	9.0	9.9	10.8	6.5	6.9	6.2	76	75	64		0	NW	1	NNW	2	9	8	7	0.0	
4	16.6	18.3	19.9	6.3	9.9	11.0	8.2	6.5	6.2	5.8	71	63	71	W	1	NNW	3	NNW	3	9	9	9		
5	22.3	23.5	23.6	5.9	7.8	9.5	9.5	5.8	6.3	6.8	74	71	76	WNW	1	WNW	2	W	2	10•	9	7	0.1	●⁰ n, a.
6	20.0	19.0	18.8	5.1	10.6	11.3	10.4	5.8	6.4	6.6	61	64	71		0		0		0	9	9	10•	0.0	● p.
7	14.5	12.7	13.4	7.4	10.7	11.8	10.6	7.9	8.4	9.0	83	83	95		0		0		0	9	9	10•	0.5	●⁰ n, ● p.
8	21.0	21.5	20.6	8.2	8.8	9.4	9.3	6.2	6.9	7.0	73	79	80	NNW	5	ESE	1		0	7	9	9	4.8	● n, a.
9	16.4	16.8	18.1	7.2	9.4	10.2	9.0	7.3	7.0	7.2	84	76	84		0		0	NNW	1	10	9	10	0.9	● n.
10	20.1	21.1	20.4	7.0	8.1	9.3	9.0	7.1	6.7	7.4	88	76	87		0	NW	3	SE	1	10	7	7	0.4	● n, ●⁰ sch. a.
11	10.4	08.3	06.1	6.5	8.9	10.0	8.4	7.7	7.8	6.9	91	86	84		0	NW	5	W	3	10•	6	10	4.1	● n, ●⁰ a.
12	00.8	00.9	01.4	6.5	8.5	9.5	9.4	7.0	7.3	6.7	80	83	76		0	WNW	3	ENE	2	10•	7	8	3.0	● n, ●⁰ a, p.
13	00.0	97.3	95.6	7.0	9.9	12.0	9.8	6.9	6.6	7.2	75	64	80		0	WNW	2	SSW	2	9	7	9	0.5	●⁰ n, ● sch. p.
14	95.0	95.6	96.6	7.1	11.8	14.0	14.4	5.1	4.4	**3.5**	49	37	29	ESE	3		0		0	7	9	7	2.7	● sch. n.
15	99.7	99.8	98.5	7.0	10.9	14.3	14.3	6.4	5.3	7.1	65	44	58		0	SSW	2	ENE	1	7	10	6		
16	95.3	95.1	**94.8**	7.0	12.7	12.0	10.4	5.4	7.2	7.7	49	69	82	SSW	2		0		0	9	10	10•	0.0	●⁰ n, a, ● p.
17	98.2	99.6	01.2	7.9	9.0	8.8	9.7	7.0	7.3	7.3	81	87	83	SE	1		0		0	10	10	9	1.8	● n.
18	06.1	06.4	06.8	6.7	8.9	10.0	11.0	5.9	6.4	5.4	70	69	55	W	2	ENE	5	ENE	2	8	4	7		
19	08.2	07.7	07.9	7.2	11.3	15.0	14.8	5.2	5.3	6.0	52	42	49		0	ESE	2		0	6	3	5		
20	11.5	11.1	11.8	**4.7**	8.4	14.1	13.3	5.0	5.0	5.5	61	42	48	SE	3	W	3		0	4	4	7		
21	15.0	14.4	14.4	5.2	9.1	11.5	13.6	4.4	5.3	5.3	51	53	46	SE	2	W	3		0	4	4	3		
22	15.3	13.9	13.5	6.7	11.7	**19.0**	15.6	5.0	5.1	6.1	48	31	47	SE	1	SSW	2		0	1	2	4		
23	15.1	14.9	16.0	10.1	10.6	11.3	12.6	7.0	**9.2**	7.0	73	93	64	NNW	3	NW	6	NNW	4	4	2	6		●⁰ sch. p.
24	15.8	15.7	14.9	8.0	8.9	8.0	8.6	7.1	6.9	6.7	84	86	81	NNE	3	NNW	4	WSW	4	10	10•	10•	0.7	● sch. n, ● a, ●⁰ p.
25	08.5	03.9	01.3	7.3	8.5	9.9	9.1	7.6	7.0	7.5	92	78	88	NW	5	N	4	NE	3	10•	10•	10•	2.5	●⁰ n, ● sch. a, p.
26	98.5	96.6	96.2	7.8	8.8	11.0	11.0	7.8	8.9	7.5	92	92	76	W	1	SW	2	SE	3	10•	6•	10•	3.0	●⁰ n, a, ●⁰ sch. p.
27	03.5	06.5	08.2	7.2	8.6	8.9	8.6	5.1	5.7	5.8	61	67	69	NW	4	NW	3	NW	4	10•	10	10	1.0	●⁰ sch. n.
28	12.0	13.1	15.9	6.6	8.1	9.2	7.4	6.1	6.2	6.2	75	71	80	N	4	N	4	N	4	10•	10	10	0.0	●⁰ n.
29	19.8	21.3	23.3	6.2	7.2	9.0	8.6	5.5	5.8	5.8	73	68	69	NE	3	W	3	W	4	10	9	9		
30	23.6	24.1	**24.4**	6.8	9.0	11.0	11.1	6.7	7.2	7.3	78	74	74	WNW	3	WSW	5	WNW	5	9	2	1		
M.	10.3	10.3	10.6	7.0	9.5	11.2	10.6	6.4	6.7	6.6	73	69	71		1.6		2.3		1.8	8.4	7.4	8.0	30.4	

$H = 7$ m, $H_b = 9.8$ m — $\varphi = 69^0\ 58'$ N

$C_g = 1.95$ mb bei 985 mb — $\lambda = 23^0\ 15'$ E

Juli.

Datum.	Luftdruck. 900 oder 1000 + 8	2	7	Luft-Temperatur. Min.	8	2	7	Absolute Feuchtigkeit. 8	2	7	Relative Feuchtigk. 8	2	7	Richtung und Stärke des Windes. 8		2		7		Bewölkung. 8	2	7	Niederschl.	Bemerkungen.
1	24.3	23.9	24.0	8.4	12.0	13.5	15.2	8.0	8.4	8.8	76	73	68	WNW	1	WNW	5		0	1	1	0		
2	23.2	23.0	23.4	9.7	15.0	19.2	20.1	8.9	9.6	8.2	70	58	47		0	NW	3	W	3	7	3	2		
3	24.4	24.4	25.2	13.0	14.4	14.4	12.3	8.2	9.1	9.0	68	75	86	WNW	5	WNW	5	W	6	3	1	3		
4	**25.4**	23.0	21.7	10.2	12.7	15.6	14.8	8.4	9.3	8.8	77	70	70	W	2	W	3	WNW	4	2	0	1		
5	18.4	15.3	13.1	10.9	15.5	21.6	18.8	9.4	11.3	11.5	71	60	71		0		0	NE	2	1	4	5		
6	10.4	09.7	09.6	15.0	17.6	18.5	20.1	11.4	9.9	11.6	76	62	66	ENE	2	NW	3		0	1	7	8		
7	08.9	07.1	06.6	15.2	21.8	**25.5**	21.0	11.9	13.0	**14.2**	62	54	77	SSE	2	W	2		0	4	7	8		☂² 5-6³⁰ p SW-N, ⊛ sch. p.
8	09.2	09.5	08.8	12.1	13.5	13.7	14.2	10.3	10.1	10.4	90	87	87	W	2	W	4	NNW	2	10	9	2	12.7	⊛² sch. n.
9	05.9	05.2	06.8	12.6	18.4	17.3	16.0	12.8	11.9	11.0	81	81	81		0	NW	4	WNW	3	1	9	9		☂² 2-4 p S-N, ⊛² sch. p.
10	05.9	03.9	04.2	12.9	14.8	16.5	14.5	11.6	12.9	11.0	92	93	84	WNW	4		0	W	4	1	8	6	9.8	☂² 1-5 p SW-N.
11	01.7	**00.9**	04.0	12.7	20.4	24.0	16.0	13.3	10.3	11.0	74	47	81		0	SSW	3	NNW	3	9	8	8	0.7	⊛ sch. n, ☂⁰ 8-10 p SW-N.
12	11.1	13.9	16.3	10.4	11.0	12.6	11.3	7.4	7.6	7.2	75	70	72	W	3	NNW	3	NNW	3	10	9	9	0.6	⊛⁰ n.
13	16.4	19.4	21.7	8.3	12.6	13.0	12.7	7.7	9.5	8.3	71	86	76		0	NE	2		0	8	10•	8		⊛⁰ a, p.
14	25.3	24.7	24.2	9.8	11.0	15.5	13.9	7.0	6.7	8.0	71	51	68		0	W	2	W	3	9	9	8	0.3	
15	20.5	18.6	18.4	8.2	17.6	22.4	19.2	7.3	8.8	9.6	49	44	58	S	2	SSE	2		0	7	8	9		
16	16.2	15.8	15.5	14.1	19.1	22.6	21.5	8.1	7.2	10.2	50	36	54	SSE	2	SSE	2		0	6	7	8		
17	16.3	15.5	14.7	14.2	22.8	17.8	18.0	9.1	10.7	10.4	44	70	68		0		0		0	3	8	6		
18	13.1	12.8	13.5	13.7	23.2	17.7	16.1	8.0	9.8	9.8	38	65	72	SSW	2	W	3	W	3	1	9	8		⊛ sch. p.
19	13.9	14.9	16.4	13.2	14.3	14.2	12.6	10.5	9.6	9.6	87	80	89	W	2	NNW	3		0	9	9	10	0.2	
20	18.8	17.7	17.3	11.6	12.9	15.7	15.6	8.9	9.6	10.2	81	73	77	NNW	2	NW	2		0	4	6	9		
21	18.2	16.5	18.8	10.7	16.8	22.7	22.3	9.1	11.4	10.5	64	56	53		0	SSW	1		0	4	8	2		
22	16.4	15.1	15.2	12.0	17.1	18.8	16.5	12.0	11.1	9.6	83	69	69	W	2	SSW	1	WNW	3	9	9	8	0.0	⊛⁰ n.
23	14.1	11.5	08.0	11.8	14.5	17.9	14.2	10.8	11.7	10.2	88	76	85	NNW	2		0	WNW	2	1	9	9		
24	07.2	07.1	09.0	11.3	14.9	15.3	11.7	**4.6**	5.4	7.2	36	41	70	SW	4	WSW	4	WSW	4	5	4	9•	1.9	⊛ sch. n, ⊛⁰ p.
25	14.8	17.4	18.4	8.5	9.8	10.9	9.8	6.5	5.6	6.1	71	57	68	WSW	3	WNW	4	W	3	8	8	9	0.0	⊛⁰ n, a, p.
26	13.0	06.5	02.7	**3.2**	11.5	19.2	22.3	5.3	7.9	9.5	53	48	48	SSE	1	SSE	1	ESE	1	4	8	3	0.0	
27	02.0	05.0	05.6	11.5	13.2	11.8	11.0	11.0	8.8	8.8	98	86	90	NNW	3	NNW	2	NNE	1	9	9	9	0.3	⊛ n, ⊛⁰ a, p.
28	04.6	05.8	06.7	8.8	10.4	11.1	9.8	8.9	7.3	5.8	95	74	64		0	NNW	3	NNW	3	9	8	9	12.8	⊛ n.
29	08.0	08.0	08.0	6.8	9.8	10.8	10.2	6.3	6.5	7.4	69	68	79	NNE	1	NNE	1	NNE	1	9	9	9		
30	07.9	06.9	05.2	7.8	7.5	11.0	11.4	7.3	8.0	8.8	94	81	88	SSW	1	SSW	1	NNE	1	9	9	10	2.0	⊛⁰ n, a.
31	02.9	01.9	01.0	7.5	15.0	13.8	15.6	10.2	10.5	10.7	81	91	81		0	NNE	1	NNE	1	8	8	2	0.9	
M.	13.5	12.9	13.0	10.8	14.9	16.6	15.4	9.0	9.3	9.5	72	67	72		1.6		2.3		1.8	5.6	7.1	6.6	42.2	

August.

Datum.	Luftdruck. 8	2	7	Luft-Temperatur. Min.	8	2	7	Absolute Feuchtigkeit. 8	2	7	Relative Feuchtigk. 8	2	7	Richtung und Stärke des Windes. 8		2		7		Bewölkung. 8	2	7	Niederschl.	Bemerkungen.
1	01.8	01.8	02.7	12.2	13.7	13.8	12.8	11.0	10.2	9.0	95	87	82		0	NW	2	NNE	2	10	10	10		
2	07.5	08.1	08.9	9.1	9.2	11.8	10.2	7.8	7.5	6.9	91	73	74		0	NNE	2	NE	2	10=	10	10	0.0	⊛⁰ n.
3	10.5	09.6	09.2	6.6	8.6	11.0	10.3	6.4	7.6	6.7	77	77	72	NW	2	NE	2	NE	1	10	9	9		
4	08.8	08.3	07.7	7.8	9.0	10.5	11.4	7.0	8.0	8.1	82	85	81		0		0	SSE	1	10	10	9		
5	07.8	07.2	06.5	8.9	12.1	13.8	12.6	8.1	9.4	9.6	78	80	89		0	ENE	1		0	10	9	9		
6	06.4	07.4	09.3	9.3	12.0	12.8	12.2	8.7	9.3	8.2	84	86	78	NW	2	WNW	3	NE	1	9	9	8		
7	11.6	11.6	11.9	6.2	10.2	12.8	12.6	6.2	7.2	8.1	67	66	75	NE	3	NW	3	NW	2	4	1	1		
8	12.3	12.5	13.0	8.6	10.0	13.7	12.7	6.8	7.9	9.0	74	68	83		0	NW	2		0	7	7	9		
9	16.3	16.6	15.7	9.0	11.6	11.6	12.3	8.2	8.2	8.3	81	80	78	NNW	2	NW	3	NE	1	7	1	2	1.0	⊛ n.
10	10.8	08.7	07.1	5.7	17.3	22.8	19.8	10.3	7.9	10.1	70	39	58		0	SSW	2	SE	1	1	7	9		
11	02.3	00.0	99.4	13.9	17.6	16.5	13.6	**11.7**	10.9	10.8	78	78	94	SE	2	SSW	2		0	9	10	10		⊛ a, p.
12	02.9	03.7	06.6	10.0	12.6	15.7	12.3	9.8	9.9	10.4	91	75	98		0	NNW	3		0	7	7	9	7.6	⊛ n, ⊛² sch. p, ☂² W-S 5-6 p.
13	12.2	12.5	11.5	8.2	13.8	15.4	12.3	7.4	7.5	9.1	62	58	87	SSW	3	NNW	2	WNW	3	6	4	9	4.9	
14	07.2	07.9	09.4	8.7	12.2	11.1	11.8	8.8	9.5	9.6	84	97	94	NW	2	NW	4	W	4	9	10•	8		⊛ a, ⊛⁰ p.
15	10.4	10.7	11.0	10.2	11.0	11.1	11.5	8.8	9.0	9.2	90	92	92		0		0	SSW	1	10•	10	10	4.0	⊛⁰ n, a.
16	12.0	11.1	10.1	10.2	11.1	13.0	12.9	8.7	9.8	9.7	89	89	88		0		0	NNW	2	9	9	9•	0.1	⊛⁰ p.
17	07.5	06.9	06.1	10.7	11.2	11.9	12.0	9.2	9.8	9.8	93	95	95	W	2		0		0	10•	10	9	9.0	⊛ n, a.
18	07.1	08.5	09.7	11.1	11.4	11.7	10.1	9.4	9.1	9.1	95	89	99	NNW	4	NW	4	NNW	4	10•	10	10•	2.0	⊛⁰ n, a, ⊛ p.
19	11.1	11.6	12.3	7.8	8.7	9.4	8.0	7.4	8.0	7.5	88	91	93	NNW	3	NE	3	NE	2	9	9	9	0.5	⊛ n.
20	15.2	15.8	15.8	6.2	8.1	9.6	9.0	6.2	5.6	5.7	77	62	67	WNW	2	NW	5	ENE	3	9	4	6		
21	18.1	17.1	17.4	4.2	7.0	11.2	11.6	5.6	5.7	**5.4**	75	58	53	SSE	2	SSE	2		0	9	1	0		
22	18.1	16.3	16.1	**3.1**	8.8	16.0	13.6	5.8	6.5	6.6	69	48	57		0		0		0	1	1	1		
23	**19.0**	18.3	18.2	3.6	9.8	13.7	13.0	7.3	8.2	8.2	82	70	74		0		0		0	0	1	1		
24	18.4	17.9	17.6	6.9	10.5	15.4	14.3	7.8	10.0	8.6	83	77	71		0		0		0	1	1	7		
25	17.7	16.7	16.6	7.8	11.8	15.8	15.0	8.8	9.5	8.6	86	71	68		0		0		0	7	2	6		
26	17.7	17.5	18.1	7.6	11.6	**23.7**	15.3	8.7	7.5	9.4	86	34	72		0	SE	2	E	1	2	2	2		
27	18.8	17.4	17.6	8.5	16.5	21.5	17.3	9.0	7.8	7.1	65	41	49	S	1	S	2	S	1	1	2	3		
28	16.9	13.8	12.4	9.7	15.2	20.7	16.9	7.9	5.6	6.9	61	31	48	S	1	S	3	S	3	2	2	7		
29	08.6	05.1	04.3	9.7	14.2	18.8	14.9	7.1	7.8	6.3	59	48	51	SE	4	S	3	S	3	8	8	7		
30	02.1	00.6	00.9	5.1	10.1	17.6	12.0	6.9	7.1	8.1	75	47	78	SW	1	E	1	E	1	9	6	8		
31	00.2	96.4	**93.5**	5.5	10.0	13.2	12.8	7.7	8.3	8.2	84	74	75	E	1		0	E	2	6	8	9		
M.	10.9	10.2	10.2	8.1	11.5	14.4	12.8	8.1	8.3	8.3	80	70	77		1.2		1.8		1.3	6.8	6.1	7.0	29.1	

$H = 7$ m, $H_b = 9.8$ m
$C_g = 1.95$ mb bei 985 mb

$\varphi = 69^0\ 58'$ N
$\lambda = 23^0\ 15'$ E

September.

Datum.	Luftdruck. 900 oder 1000 + 8	2	7	Luft-Temperatur. Min.	8	2	7	Absolute Feuchtigkeit. 8	2	7	Relative Feuchtigk. 8	2	7	Richtung und Stärke des Windes. 8		2		7		Bewölkung. 8	2	7	Niederschl.	Bemerkungen.
1	86.1	85.4	87.2	7.5	13.0	13.5	10.4	**9.1**	7.3	5.9	82	63	63		0	S	3	S	2	9●	8	5	0.0	●⁰ n.
2	83.9	82.3	**80.8**	7.2	9.2	**14.5**	11.8	8.0	**9.1**	8.9	92	74	87	W	4	W	1		0	10●	9	9	2.3	●⁰ n, a.
3	83.2	85.6	88.3	7.4	9.4	13.5	11.3	7.3	6.8	7.4	84	59	74	SE	1	S	2		0	9	8●	7	7.1	● n, ●⁰ a, p.
4	93.5	95.0	96.0	8.9	11.4	13.3	10.9	7.8	8.3	7.8	78	73	81		0		0		0	9	7	8	0.0	●⁰ n, a.
5	93.5	94.1	95.9	8.2	9.2	13.0	10.8	8.0	8.7	7.5	92	78	77	W	4	NE	5	NE	3	10●	7	9	2.8	●⁰ n, a.
6	00.5	01.1	01.9	9.2	10.2	10.2	9.8	8.3	8.3	8.3	90	90	92		0	W	3	NE	2	9	9	10	1.1	●⁰ n.
7	03.0	03.2	03.9	7.5	9.5	12.6	10.6	8.4	7.7	7.8	95	71	83		0	E	2		0	10●	10	10	0.2	●⁰ n, a.
8	06.5	08.0	09.6	6.6	9.1	10.2	9.6	7.9	7.8	7.1	92	84	80		0	W	2	NE	1	9	7	10	0.0	●⁰ n.
9	11.7	12.1	13.5	7.1	8.6	11.4	8.6	7.7	7.2	7.2	92	72	87	NE	1	NE	1	SE	2	10	9	9	0.0	●⁰ n.
10	14.9	15.8	16.8	6.4	7.7	9.3	8.0	7.2	7.6	6.0	91	88	75		0	W	2		0	10●	9	10	1.0	●⁰ n, a.
11	16.5	14.9	14.3	2.1	6.7	11.0	8.8	5.5	6.6	6.4	76	68	76		0	W	2	W	3	3	4	9	0.0	
12	11.2	08.5	07.5	3.8	7.7	12.5	11.0	6.5	6.8	6.2	83	63	63	E	2	N	2	SE	1	8	5	9		●⁰ a.
13	05.8	06.5	08.1	7.2	10.4	10.4	7.6	6.5	8.7	6.8	69	93	88		0		0	ESE	1	9	10●	10●	0.0	●⁰ a, ●⁰ p.
14	06.1	04.3	00.5	6.3	7.5	8.7	10.2	7.3	7.8	7.4	94	93	79		0		0	ESE	2	10●	10●	9	3.2	●⁰ n, ● a, p.
15	00.4	04.8	09.6	7.5	10.6	12.1	9.8	8.6	8.0	7.0	91	76	78		0		0	NNW	3	9●	9	7	6.1	●⁰ n, p.
16	12.9	15.0	17.2	8.0	8.4	7.6	7.0	5.8	6.3	4.8	70	80	65	N	3	NW	3	NW	3	9	8●	7●	0.3	●⁰ a, p.
17	**22.2**	21.7	22.1	2.1	4.1	8.4	5.1	4.5	5.6	5.0	75	67	77		0	ENE	2	SE	1	7	8	1	0.0	●⁰ n.
18	20.7	19.7	19.2	1.2	5.7	10.5	6.0	4.7	4.8	4.4	68	51	63	S	3	SSW	4	SSE	3	2	3	1		
19	17.7	15.9	15.3	0.2	3.7	8.1	3.7	4.0	**3.6**	**3.6**	67	46	60	SSW	3	SSE	4	SSE	1	2	2	1		
20	14.3	12.7	12.3	**-0.9**	2.1	9.5	4.4	3.7	3.8	3.9	61	43	62	ESE	2	SE	1	SE	2	0	1	1		
21	08.4	07.4	06.5	1.0	6.0	6.2	6.2	4.4	4.7	5.1	63	66	72	SSE	3	SSE	3	SSE	2	7	9	9		
22	01.1	99.1	97.5	5.2	8.2	8.8	7.6	6.3	6.0	6.1	78	71	79	SSE	3	SSE	2	SW	1	7	9	10		●⁰ p.
23	97.4	98.5	97.7	4.2	5.8	6.5	6.2	6.4	6.5	6.7	93	90	94		0	SW	1	E	1	10	10	9	3.0	● n, ●⁰ p.
24	96.1	96.7	97.6	1.2	6.8	11.2	9.3	6.2	6.7	7.2	84	67	83	SSE	1	SSW	1	SSW	1	9	7	9	0.5	
25	00.7	01.3	03.0	6.3	6.8	8.9	8.4	6.8	7.5	7.1	93	88	87	SE	1		0	SSE	1	9	8	9		
26	06.3	06.0	06.0	6.2	7.3	9.0	8.4	7.3	7.5	7.0	96	88	86	ENE	2	W	1	W	1	9	7	9	0.4	●⁰ n.
27	09.5	12.5	16.2	5.8	6.2	7.2	5.0	6.1	5.5	5.3	87	73	81	W	1	NW	2	SE	2	10●	9	10●	1.0	●⁰ n, a, p.
28	19.5	17.7	15.2	2.6	3.3	7.4	5.3	4.3	4.8	4.9	73	62	74	SE	1	SSE	3	W	2	6	6	7	1.0	●⁰ n.
29	99.6	94.1	93.9	3.3	7.7	8.9	8.0	5.1	5.4	5.4	65	63	67	SSW	3	SSW	6	SSW	1	9	9	2		●⁰ a.
30	01.8	03.4	03.2	4.3	7.0	10.1	9.2	5.2	4.8	5.3	70	51	61	SSW	1	SSW	3	WSW	3	7	8	5	0.0	
M.	04.8	04.8	05.2	4.9	7.6	10.2	8.3	6.5	6.7	6.3	82	72	76		1.3		2.0		1.5	7.9	7.5	7.4	30.0	

Oktober.

Datum.	8	2	7	Min.	8	2	7	8	2	7	8	2	7	8		2		7		8	2	7	Niederschl.	Bemerkungen.
1	94.1	89.6	88.5	6.8	8.8	**11.0**	6.4	5.0	4.4	4.1	59	45	57	SSW	4	SSW	4	SSW	2	7	8	8		
2	86.8	90.9	91.5	4.7	6.0	6.0	3.2	4.9	4.3	**5.8**	70	62	00	W	6	W	5	SSW	3	9●	8	10●	0.5	● n, ●⁰ a, p.
3	83.7	81.3	79.3	1.3	3.5	5.0	1.7	3.7	4.5	3.8	62	69	73		0		0	E	2	7	9	9	0.5	●⁰ n.
4	89.2	91.2	90.5	-0.7	2.7	3.7	0.0	3.6	3.2	2.5	64	52	53	NW	3	SW	3	SE	1	9	4	7	0.7	●⁰ n, ✱⁰ a.
5	91.3	94.3	95.6	-3.8	-1.0	0.9	1.0	4.1	4.7	4.9	95	96	98	E	2	W	1	SW	3	10✱	10●	10●	1.4	✱ n, a, ● p.
6	94.6	95.6	96.1	-1.0	2.6	4.0	2.7	5.4	5.6	4.8	98	92	86	W	3	NW	4	N	2	10●✱	8	6	7.3	● ✱ n, ● a, p.
7	99.0	00.8	01.5	-1.8	-0.5	3.5	3.6	4.2	4.5	5.0	95	77	85	E	2	NNW	4	W	6	8	9	8	2.5	✱ n, ✱⁰ a.
8	04.4	04.0	00.2	-1.2	0.4	1.6	0.0	4.3	4.5	3.7	90	87	79	SE	2	SSE	1	SE	1	8	10	2	0.2	✱⁰ n, ✱ a.
9	76.9	74.8	73.0	-1.3	3.2	3.7	1.0	4.6	5.3	4.9	80	88	98	SSW	3	SW	6	NW	4	9	6	10●✱	0.8	● ✱ p.
10	72.5	**71.7**	74.9	-0.9	0.0	1.0	1.0	4.4	4.8	4.8	96	96	96	WSW	6	WNW	6	WNW	7	10✱	10✱	10●✱	1.5	✱ sch. n, a, ● ✱⁰ sch. p.
11	85.6	86.3	87.5	-0.6	1.3	0.5	-0.3	3.6	4.6	3.9	72	96	87	WNW	6	W	3	SSE	2	8	10✱	6	1.6	● ✱ sch. n, ✱⁰ sch. a, p.
12	92.1	93.1	97.3	-7.7	-7.0	-3.4	-9.2	1.9	2.6	2.0	67	73	85	E	3	NNE	1	E	3	3	2	1	0.2	
13	03.2	05.7	07.1	-12.5	-9.5	-4.5	-4.9	2.0	2.9	3.0	88	86	93	E	3	E	2	ESE	3	9	9	9		✱⁰ a.
14	07.9	08.1	08.2	-10.3	-3.0	-0.2	-5.2	2.9	3.8	2.9	78	83	93	E	3	E	1	E	2	8	6	6	0.2	
15	07.9	07.6	06.9	-11.4	-10.6	-7.8	-8.1	1.8	2.1	2.1	87	81	83	E	3	E	2	E	3	7	7	7		
16	03.1	05.2	02.7	-11.1	1.2	1.8	2.6	4.5	4.8	5.0	89	91	91	N	4	NNW	3	NNE	4	9	9	10		✱ sch. a.
17	02.8	03.9	03.8	-4.6	-0.8	0.4	-6.0	4.0	4.1	2.6	93	86	87	W	3	SE	2	SSE	2	10✱	8	7	2.1	✱ sch. n, a.
18	05.9	07.7	08.6	-11.3	-10.2	-6.3	-11.2	1.9	2.3	1.7	90	78	86	SSE	2	SE	2	SSE	3	2	2	0	0.2	
19	07.3	04.6	03.8	-14.0	-12.5	-7.3	-9.2	1.6	2.0	2.0	88	76	85	E	3	E	1	E	3	1	5	2		
20	95.7	96.0	97.1	-13.0	-7.5	-6.5	-9.7	2.2	2.6	**1.3**	84	92	57	E	2	E	1	E	3	7	7	4		
21	02.4	05.8	08.5	-1[illegible].0	-11.9	-6.5	-11.0	1.5	1.8	1.8	77	63	90	E	3	E	2	E	2	2	1	0		
22	09.2	06.8	06.3	-12.4	-10.6	-5.0	-9.5	1.8	2.7	1.9	87	85	81	E	2	E	2	E	1	1	1	1		
23	03.9	03.2	00.8	-15.1	-9.1	-1.0	-0.1	1.9	3.8	4.2	82	88	91	E	3	SE	1	SE	3	6	8	10		
24	95.7	95.6	94.9	-11.5	-0.1	1.9	2.5	4.3	4.8	4.9	93	91	89	S	2	SE	1	S	2	6	10	9		
25	94.5	94.9	95.1	-4.3	4.2	3.9	3.2	**5.8**	5.4	5.2	93	88	90	S	3	S	3	SE	1	8	7	10		
26	00.9	03.1	05.5	-4.1	1.4	2.5	1.7	4.5	5.1	4.7	89	93	91	E	3	E	1	E	2	9	8	10		
27	12.2	15.5	16.5	1.0	2.0	1.3	0.7	5.2	4.4	4.2	98	87	86	E	1	SE	1	SE	2	10●✱	10●✱	10	0.0	● ✱⁰ n, a.
28	14.3	11.5	09.3	-0.1	0.0	-0.5	-0.9	3.8	4.0	3.7	83	89	86	SE	2	SE	1	SE	1	10	10	10	0.0	
29	10.8	13.2	14.4	-4.2	-2.9	-4.2	-7.8	3.2	2.9	2.3	86	86	90	NE	2	E	2	E	3	3	2	9		
30	14.5	15.7	16.8	-8.8	-0.8	-0.5	-5.4	4.1	4.1	2.7	95	99	87	W	4	NE	3	SE	3	10✱	10✱	2	2.6	✱ n, ✱ sch. a, p.
31	25.4	27.6	**31.3**	-11.0	0.0	0.4	-0.6	4.2	4.5	3.9	91	94	89	NE	4	N	6	NE	2	10✱	10✱	9	3.6	✱⁰ sch. n, a, p.
M.	99.6	00.2	09.4	-5.5	-2.0	0.0	-2.2	3.6	3.9	3.6	84	83	85		3.0		2.4		2.6	7.3	7.2	6.8	25.9	

$H = 7$ m, $H_b = 9.8$ m

$C_g = 1.95$ mb bei 985 mb

$\varphi = 69^0\ 58'$ N

$\lambda = 23^0\ 15'$ E

November.

Datum.	Luftdruck. 900 oder 1000 + 8	2	7	Luft-Temperatur. Min.	8	2	7	Absolute Feuchtigkeit. 8	2	7	Relative Feuchtigk. 8	2	7	Richtung und Stärke des Windes. 8	2	7	Bewölkung. 8	2	7	Niederschl.	Bemerkungen.
1	36.3	**36.7**	35.7	-4.6	-4.1	-2.6	-2.5	3.0	3.5	3.5	89	91	91	E 3	SE 2	SE 2	10*	10*	10	0.0	✱⁰ n, a.
2	28.8	25.1	21.5	-4.7	-4.2	-4.8	-3.7	2.9	2.8	3.1	86	85	87	SE 3	E 2	E 3	10	9	9	0.0	
3	14.3	11.9	08.5	-5.6	-1.6	2.2	-0.2	3.6	4.3	3.7	87	80	81	E 2	W 3	SE 3	7	8	9		
4	99.6	97.2	96.5	-8.0	-7.4	-7.3	-7.2	1.9	2.1	2.1	74	79	76	E 3	E 2	SE 3	7	9	4		
5	94.9	95.8	96.9	-8.6	-7.4	-5.8	-4.4	2.5	2.7	3.1	94	90	94	E 3	E 3	E 3	9	9	10*	1.2	✱ n, ✱⁰ p.
6	00.8	02.8	03.6	-8.4	-2.2	-8.2	-6.9	2.9	2.3	2.4	73	93	85	NE 2	E 3	E 3	9	8	9	0.2	✱⁰ n.
7	02.2	00.6	99.0	-10.3	-7.4	-6.6	-9.3	2.5	2.7	2.1	94	94	92	E 2	E 2	E 3	10*	9*	7	1.5	✱ n, a, ✱⁰ p.
8	98.5	97.4	99.9	-10.1	-9.2	-10.6	-12.3	2.1	1.7	1.4	92	79	76	E 2	E 2	E 2	6	7	1	8.1	✱ n.
9	01.1	01.7	02.6	-15.7	-15.4	-13.1	-13.2	1.1	1.4	1.3	75	79	75	E 2	E 2	E 2	6	7	2		
10	05.6	07.1	07.6	-15.4	-11.9	-14.2	-14.3	1.5	1.2	1.1	80	77	68	E 1	E 2	E 3	2	7	2		
11	08.8	07.1	03.4	-15.4	-13.3	-10.2	-5.6	1.3	1.7	2.7	79	77	87	E 2	NE 3	SE 1	4	9	3		
12	00.6	95.8	96.6	-13.9	-2.1	-0.9	-1.1	3.9	4.3	4.1	98	99	97	E 2	E 1	E 2	10*	10*	9	2.0	✱ n, a.
13	01.8	05.6	09.1	-2.6	1.2	**7.7**	5.0	5.0	**6.8**	5.9	00	88	90	E 2	W 5	SSW 2	10	7	3	2.7	◉⁰ n, a.
14	09.7	08.1	06.4	1.2	4.1	1.1	-0.5	5.3	4.5	3.5	87	90	78	ENE 1	E 1	E 1	9	9	3	0.1	
15	05.7	07.6	10.9	-3.8	1.0	6.3	4.0	3.9	6.1	5.2	79	86	85	E 2	W 2	NE 1	9	9	4		◉⁰ a.
16	14.8	13.9	10.0	-2.5	-2.4	-3.8	-1.9	2.8	3.1	3.5	73	89	87	E 2	E 1	E 2	8	8	3	0.0	
17	11.7	13.5	15.7	-4.8	-3.5	-4.4	1.4	2.9	2.9	3.8	84	86	74	E 2	SE 3	SW 3	8	7	4	0.1	✱⁰ n, ✱ sch. p.
18	04.3	94.9	91.7	-5.5	1.2	4.8	5.2	3.7	4.6	4.2	74	72	64	0	SSW 5	W 5	9	9	8	2.0	◉⁰ sch. p.
19	89.8	**88.5**	88.6	1.0	3.8	0.0	1.8	4.4	4.4	3.8	73	97	73	W 4	ESE 2	SW 2	10	9	6	1.6	◉⁰ sch. n, ✱ sch. a.
20	92.2	97.3	00.5	-1.8	-1.6	-3.4	-4.2	4.0	3.0	2.4	98	83	73	E 4	E 1	0	10*	10*	10	0.7	✱ n, a, p.
21	01.3	02.1	03.7	-7.5	-7.0	-3.6	-3.5	2.6	2.3	2.9	96	66	84	E 3	N 4	NNW 6	10	9	6*	2.3	✱⁰ n, a, △⁰ sch. p.
22	03.1	99.9	94.5	-7.8	-1.6	-2.4	-1.3	3.0	2.5	3.0	73	66	70	NNW 5	SE 1	SSW 1	8	9	8	0.3	△⁰ sch. n.
23	95.2	96.0	94.5	-5.3	-2.2	-2.0	-5.4	3.3	3.2	2.4	85	80	77	SE 1	W 3	SE 1	9	9	10		✱⁰ a.
24	90.0	90.9	92.7	-12.4	-10.4	-10.8	-12.4	1.9	1.8	1.6	90	89	89	E 3	0	SE 2	8	9	2	0.1	✱⁰ n.
25	98.3	00.1	00.7	-16.2	-11.0	-10.0	-14.2	1.8	1.8	1.3	87	82	84	0	ESE 1	W 2	6	7	1		
26	98.9	00.1	02.0	-15.4	-12.5	-11.4	-12.6	1.4	1.5	1.3	76	75	75	NE 2	W 3	WSW 2	7	9	1		
27	08.8	11.0	14.3	-16.1	-11.7	-10.2	-11.0	1.3	1.5	1.5	70	72	72	SE 2	S 4	SSE 1	6	1	1		
28	16.9	17.2	16.4	-15.5	-12.1	-10.7	-15.2	1.4	1.7	1.2	79	81	83	0	SSE 1	ESE 1	8	2	1		
29	13.6	11.2	09.5	-21.2	-20.9	-18.7	-17.0	**0.7**	0.9	1.1	85	87	87	ESE 3	E 3	E 3	1	9	9		
30	02.8	02.3	01.7	**-22.6**	-1.8	-3.7	-3.9	3.2	3.0	2.4	78	86	70	W 4	NNW 4	W 4	10	7	7	0.3	✱⁰ n, ✱ a, △⁰ sch. p.
M.	05.0	04.6	04.5	-9.3	-5.8	-5.2	-5.5	2.7	2.9	2.7	84	83	81	2.2	2.4	2.3	7.9	8.0	5.4	23.2	

December.

Datum.	Luftdruck. 900 oder 1000 + 8	2	7	Luft-Temperatur. Min.	8	2	7	Absolute Feuchtigkeit. 8	2	7	Relative Feuchtigk. 8	2	7	Richtung und Stärke des Windes. 8	2	7	Bewölkung. 8	2	7	Niederschl.	Bemerkungen.
1	03.5	04.7	04.9	-14.6	-14.5	-14.9	-14.6	1.3	1.3	1.3	88	88	85	E 3	E 3	E 2	7	8	7	5.0	✱² n.
2	08.5	10.9	14.0	-19.7	-18.4	-15.7	-17.3	0.8	1.2	1.0	81	86	85	E 3	E 3	E 3	6	7	3		✱ a, ✱⁰ p.
3	17.7	13.9	05.6	-20.6	-18.3	-13.1	-6.9	0.9	1.3	1.7	84	77	62	ESE 3	SSE 2	SE 3	6	8	10	0.1	
4	89.9	85.9	85.9	-19.8	-0.3	-0.1	0.9	3.7	4.3	4.4	85	93	88	SW 3	WSW 6	WSW 7	8	10•	9		◉ ✱ a, ◉ ✱⁰ p.
5	98.3	02.2	03.0	-1.6	0.7	-0.1	-0.5	3.5	4.3	4.0	75	94	89	W 7	W 6	W 2	9*	10*	6	2.5	✱ n, ✱⁰ a, p.
6	90.5	90.5	93.8	-8.8	-6.5	-5.2	-5.0	2.0	2.5	2.7	72	80	85	0	0	E 2	10	10	7*	0.3	✱⁰ n, a, p.
7	03.1	01.4	98.0	-7.4	0.3	-0.9	0.2	3.5	3.0	3.6	76	69	77	SSW 2	SE 1	0	10	10	10	0.2	✱⁰ n.
8	95.6	97.2	97.5	-1.4	4.0	6.2	**6.9**	5.0	5.1	**5.2**	72	72	70	SE 2	E 2	S 3	9•	10	10	0.0	◉⁰ n.
9	99.0	99.3	98.6	2.4	3.7	3.8	3.4	4.9	4.7	4.5	83	79	77	E 2	SE 2	E 3	10	9	9		
10	95.3	94.8	98.2	-4.5	-4.0	-5.4	-3.3	2.6	2.3	2.8	74	76	78	NE 2	E 1	N 3	9	8	10*		✱⁰ sch. p.
11	07.6	09.8	10.5	-6.4	-5.4	-6.9	-7.8	2.3	1.9	1.9	75	70	73	NE 6	NE 4	NE 3	10*	10	10	0.0	✱⁰ n.
12	11.0	10.8	10.7	-9.8	-7.2	-11.2	-14.3	1.8	1.5	1.3	67	82	85	NE 2	E 3	E 3	10	6	1		
13	15.0	16.1	16.2	-15.8	-13.0	-17.0	-17.5	1.4	1.1	1.0	80	88	88	E 4	NE 4	NE 4	3	3	2		
14	19.6	**20.6**	20.2	-19.1	-16.1	-15.8	-20.3	1.1	1.3	0.8	84	90	85	E 2	E 2	E 3	10	10	1		
15	17.9	16.0	14.0	-22.6	-18.3	-15.0	-15.2	1.0	1.1	1.0	79	77	75	E 4	E 3	SE 3	5	8	1		
16	05.4	01.6	02.1	-18.0	-13.8	-14.2	-13.6	1.0	1.0	1.4	60	66	83	NE 2	S 5	SE 2	7	10	10*		✱⁰ p.
17	03.2	05.2	06.1	-17.6	-16.6	-18.8	-23.0	0.9	0.8	**0.6**	69	77	81	SE 2	SE 3	E 3	2	2	1	0.2	✱⁰ n.
18	03.9	01.7	00.3	**-25.5**	-22.5	-20.0	-17.0	**0.6**	0.8	1.1	81	85	86	E 3	SE 3	E 3	8	8	3		
19	92.8	90.4	87.8	-23.5	-16.5	-15.6	-13.8	1.2	1.2	1.4	90	85	86	E 3	SE 3	E 4	5	10	10		
20	94.1	00.3	03.1	-18.5	-13.8	-19.2	-19.8	1.1	0.9	0.8	80	81	80	SE 2	E 2	E 2	2	6	1	0.0	✱⁰ n
21	09.5	10.9	09.6	-22.8	-21.8	-19.7	-17.8	0.7	0.8	0.9	80	78	77	E 3	E 2	E 1	1	1	1		
22	08.3	09.7	08.5	-23.1	-12.5	-15.6	-15.7	1.2	0.9	1.0	67	69	72	SE 2	SE 2	NE 3	10	10	10		
23	98.4	99.6	98.5	-17.1	-10.6	-9.0	-9.0	1.5	1.6	1.6	73	70	69	SE 2	SE 4	E 3	9*	10	9	0.1	✱⁰ n.
24	98.1	97.1	95.3	-11.1	-8.6	-7.8	-9.3	1.7	1.9	1.7	70	72	74	SE 3	0	0	10	10*	8		✱⁰ a.
25	93.7	93.2	92.9	-11.5	-10.0	-8.5	-8.2	1.9	2.1	2.2	88	85	86	SE 2	SE 3	SE 2	8	10	10	0.0	
26	91.9	93.6	94.8	-10.5	-0.5	-0.8	-1.5	3.6	3.1	3.1	77	72	76	NE 4	NW 5	N 5	10*	10	10*	0.0	✱⁰ n, ✱⁰ sch. p.
27	97.2	97.9	97.7	-4.1	-3.1	-3.9	-4.8	2.9	2.7	2.5	80	77	79	NE 3	NE 3	SE 2	10	10	7	0.0	
28	97.0	96.6	95.3	-10.0	-6.3	-6.6	-6.1	2.2	2.0	2.1	76	72	70	SE 3	S 3	SE 3	7	10	8		✱⁰ sch. a.
29	91.6	91.4	88.3	-9.8	-8.4	-7.7	-6.7	1.8	1.8	1.9	71	69	69	SE 5	0	S 5	8	10	8	0.0	
30	84.2	80.3	77.9	-8.6	-6.6	-6.6	-8.6	1.9	2.0	1.7	68	72	70	S 3	S 3	SE 1	10	10	9		
31	**75.2**	77.2	78.5	-11.3	-8.3	-11.4	-14.3	1.8	1.5	1.3	75	76	83	SE 1	0	E 3	7	10	3		
M.	00.5	00.7	00.3	-13.3	-9.5	-9.6	-9.7	2.0	2.0	2.0	77	78	79	2.8	2.7	2.8	7.6	8.5	6.3	8.4	

Vardø.

1925.

H = 6 m, H_b = 6.8 m

C_y = 2.05 mb bei 990 mb

φ = 70° 22′ N

λ = 31° 8′ E

Januar.

Datum.	Luftdruck 900 oder 1000 + 8	2	7	Luft-Temperatur. Min.	8	2	7	Absolute Feuchtigkeit. 8	2	7	Relative Feuchtigk. 8	2	7	Richtung und Stärke des Windes. 8	2	7	Bewölkung. 8	2	7	Niederschl.	Bemerkungen.
1	83.6	84.4	87.1	0.5	1.0	0.6	-1.0	4.2	4.1	3.6	86	85	85	SW 5	SW 3	SW 4	10•	7	0	3.0	◍ ✱ n, ◍ a bis 1⁵ p.
2	87.1	85.0	82.6	-3.2	1.8	1.6	1.6	4.4	4.2	3.8	84	82	73	SW 7	SSW 7	SW 7	8	10	10	0.5	
3	75.1	74.7	74.2	-1.4	-0.2	0.2	0.0	3.3	3.4	3.4	74	74	74	SW 7	SSW 4	SSW 4	10	10	5		
4	76.1	77.8	78.8	-1.0	0.2	-0.6	-1.0	3.7	3.3	3.2	80	75	75	S 4	SSW 4	SSW 3	10	10	10*		✱ sch. von 3¹⁰ p an.
5	77.6	78.4	78.8	-1.4	-0.6	-0.8	-0.2	3.6	3.7	3.2	80	84	72	SE 4		0	8	6	10	0.6	✱ n, ✱ sch. 11³⁰ a - 1 p.
6	81.3	83.5	86.2	-3.0	0.6	1.2	0.6	3.6	4.3	3.7	74	85	76	0	NE 4	ENE 4	6	10	10	2.5	✱ n, 8⁵⁰ a - 1 p, p bis 6 p.
7	89.6	90.7	91.8	-1.6	-0.6	-0.6	-2.4	3.7	3.0	3.5	84	68	91	NNE 1	NE 4	0	4	7	8	4.4	✱ sch. 8¹⁰ - 11 a.
8	95.2	97.3	97.7	-2.6	-2.2	-1.8	-5.0	3.0	3.5	2.8	79	87	88	0	0	0	6	6	4	2.8	✱ n, 9 - 12 a, 2 - 4³⁰ p.
9	97.0	97.8	98.9	-5.8	-4.4	-6.8	-6.8	3.1	**2.0**	**2.0**	91	73	72	0	0	0	7	1	0	5.2	✱ n.
10	02.3	04.0	03.2	-8.4	-7.2	-7.2	-8.2	2.6	2.7	2.4	97	00	96	0	SW 4	SW 4	4	10	7		
11	02.7	04.9	03.3	**-10.8**	-10.0	-9.4	-8.4	**2.0**	2.1	2.3	91	93	95	SW 4	SW 4	SW 6	10	10	10	0.1	≡ n.
12	94.4	95.8	91.5	-10.0	-4.2	-1.2	0.8	3.2	4.2	4.5	95	00	93	SW 4	SW 5	SW 5	9	10	10	6.3	✱ n.
13	89.9	92.1	96.1	-4.2	3.0	-0.2	-1.6	4.2	3.7	3.3	75	82	81	0	WNW 4	NW 4	10	8	2		
14	03.7	98.0	86.7	-4.0	-4.0	-1.2	0.8	2.8	3.5	4.2	83	84	87	W 4	SW 6	SW 7	2	8	10		
15	64.4	57.5	**53.0**	-4.0	2.2	3.2	2.4	4.4	4.4	4.4	82	77	80	SW 5	S 5	WSW 5	8	10	10	2.0	✱ n.
16	71.0	79.5	77.7	-1.0	0.4	-2.5	-4.6	3.9	3.1	2.4	82	82	73	NW 9	W 4	SW 3	10•	5	4	0.8	◍ ✱ n, ✱ sch. bis 12⁴⁵ p.
17	71.3	81.2	92.6	-4.8	0.8	0.6	-3.0	3.7	4.1	3.1	77	84	84	WNW 5	NNW 4	N 6	10	10	0	1.6	✱ n, ✱ sch. 12 - 5¹⁵ p.
18	92.9	86.5	84.1	-3.8	0.2	1.2	0.8	4.1	4.2	4.9	88	84	00	SW 6	SW 7	SW 6	10	0	3	2.3	
19	86.2	87.6	90.9	-2.6	-1.8	-1.2	-2.2	3.2	3.5	4.0	79	84	00	WSW 1		NW 7	8	10	10*		✱ p von 5¹⁵ p an.
20	06.6	04.3	02.8	-7.2	-5.0	-2.8	1.8	3.2	3.8	5.3	00	00	00	W 4	WSW 4	NNW 4	10	10*	10•	7.0	✱ n, von 11³⁰ a an, ◍ von 4¹⁵ p an.
21	98.5	05.4	17.7	-4.9	**5.8**	3.8	2.0	**6.9**	5.9	3.9	00	99	73	NW 4	NNW 8	NE 5	8	7	10	6.3	◍ n.
22	20.1	**21.6**	21.4	0.5	5.0	4.2	4.5	5.3	5.0	4.6	81	81	73	N 3	W 3	WNW 3	10	10	4	2.0	◍ n.
23	18.1	12.1	11.7	0.0	0.6	-2.0	-2.6	4.3	3.6	3.3	88	90	87	SW 4	WSW 7	SW 5	1	3	2		
24	11.0	14.0	16.3	-3.3	-0.8	0.8	-0.4	3.5	4.2	3.4	80	87	76	SW 4	N 3	NNW 4	8	10•	3		◍ ✱ 11¹⁵ a - 2¹⁵ p.
25	11.0	11.9	15.8	-2.6	-2.2	-5.0	-7.0	3.5	2.8	2.3	89	89	83	NNW 4	N 6	N 7	10*	10*	10*	3.3	✱ n, ✱ sch. a, ✱ p.
26	18.2	15.1	13.1	-7.0	-3.8	-3.6	-4.4	2.4	2.6	2.8	69	74	84	NNE 6	NNE 5	NNW 5	10	10*	10*	7.1	✱ n, ✱ sch. von 10³⁰ a an.
27	08.1	10.4	09.4	-5.4	-4.0	-2.8	-1.4	2.9	3.2	3.8	86	86	92	0	0	SW 2	10*	10*	10*	7.6	✱ n, a, p.
28	07.9	10.0	10.8	-4.0	0.6	2.0	2.0	4.5	4.8	4.7	95	92	89	SSW 3	NNW 3	NNW 1	10•	10	2	25.6	✱ n, ◍ ✱ a bis 11⁴⁵ a.
29	10.9	10.3	08.4	0.2	1.4	0.8	0.8	4.2	4.0	3.6	83	83	74	NW 2	WSW 2	SW 1	6	10	10	2.0	
30	02.2	01.6	00.3	-2.4	0.4	-1.3	-1.6	3.8	3.1	3.1	80	75	76	S 3	S 6	SSW 4	10	1	6		✱ sch. 9¹⁵ - 10⁴⁵ a.
31	96.1	94.0	93.3	-3.0	-1.2	-1.2	-1.0	3.1	3.1	3.4	73	73	80	S 6	S 5	S 5	10	10	10*	0.0	✱ p von 6⁰⁵ p an.
M.	95.2	95.7	96.0	-3.6	-0.9	-1.0	-1.4	3.7	3.6	3.5	84	84	83	3.5	3.9	3.9	8.2	8.0	6.8	93.6	

Februar.

Datum.	8	2	7	Min.	8	2	7	8	2	7	8	2	7	8	2	7	8	2	7	Niederschl.	Bemerkungen.
1	91.8	93.3	94.6	-2.1	-1.6	-2.0	-1.8	3.5	3.3	3.4	85	82	85	S 5	S 4	SSW 5	8	9	10	0.2	✱ n.
2	95.5	93.0	91.8	-3.7	-2.2	-2.4	-2.8	3.3	3.5	3.2	84	84	87	S 3	SW 5	SW 5	10	10	10		
3	85.7	85.6	85.4	-4.4	-4.2	-4.0	-3.8	2.9	2.9	3.0	88	85	84	SSW 5	SW 5	SSW 4	7	8	10		
4	82.2	81.5	80.2	-5.2	-4.0	-5.8	-5.2	2.9	2.5	2.6	86	85	84	SSW 4	SW 3	SW 5	1	2	4		
5	81.2	79.5	73.7	-5.9	-4.0	-4.6	-2.4	2.9	2.9	3.1	86	88	80	SW 4	SSW 5	S 7	10	9	10	1.0	✱ n.
6	**65.7**	66.4	68.7	-5.9	-3.4	-5.0	-6.0	3.1	2.6	2.2	85	84	77	SW 3	SW 5	SSW 5	4	5	10	2.0	✱ n.
7	80.7	85.7	89.0	-6.2	-5.0	-6.0	-6.6	2.3	2.2	2.1	74	76	76	NW 2	WNW 2	W 3	4	0	0	2.0	✱ n.
8	94.2	94.8	95.6	-9.4	-7.4	-5.8	-8.0	2.3	2.5	2.1	87	85	84	SW 5	SW 5	SW 5	10	9	0		
9	88.9	88.0	87.0	-8.2	-3.0	-1.8	-2.4	2.7	3.0	2.9	74	74	76	S 8	S 9	S 8	10	10	10		
10	89.3	87.3	89.0	-4.4	-1.6	-2.4	-2.0	3.1	2.9	3.0	76	75	77	SW 7	S 5	S 5	9	10*	10		✱ von 11⁴⁵ a an, ✱ sch. p.
11	89.3	89.8	88.5	-3.4	-1.4	-1.2	-1.4	3.5	3.4	3.2	84	82	78	S 4	S 4	SSE 4	10	10	10	0.4	✱ n bis 7⁴⁰ a, 9¹⁰ - 9³⁰ a.
12	88.5	91.6	92.1	-2.0	-1.2	-1.2	-0.6	3.4	3.4	3.7	83	80	84	SE 4	S 4	S 4	10	10	7	0.0	✱ 8³⁰ - 11 a, 4 - 5¹⁵ p.
13	83.2	79.5	83.9	-3.4	1.4	**3.0**	2.0	4.2	**4.6**	4.0	84	82	76	S 5	SSW 7	SSW 5	10	9	0	3.6	✱ n, ◍ von 2¹⁵ p an.
14	92.8	96.0	99.8	-1.5	-0.8	-1.0	0.0	3.3	3.1	3.4	76	74	73	SW 6	SW 6	SW 5	3	7	10	1.0	
15	08.6	10.1	09.4	-3.0	-2.4	-2.0	-3.6	3.3	3.4	2.9	85	85	84	SW 4	SSW 4	SW 4	2	2	0		
16	04.9	04.3	04.6	-3.8	-0.4	1.4	1.0	3.9	4.5	4.3	88	89	88	0	NNE 3	NE 4	10*	10•	10•	1.2	✱ n bis 11³⁰ a, ◍ u. ◍ ✱ p.
17	04.7	05.2	05.4	-1.2	0.0	-1.2	0.2	3.9	3.5	3.7	85	85	80	NNW 2	WNW 3	NW 2	10*	5*	4	1.9	✱ n, ✱ sch. a bis 3¹⁵ p.
18	06.3	07.3	07.0	-2.5	-0.1	-1.8	-3.0	3.2	3.0	3.1	72	74	85	ENE 4	E 4	NE 4	10	9	10*	2.7	✱ n, ✱ sch. von 9 a an, p.
19	06.5	05.9	05.0	-4.2	-3.8	-2.0	-3.2	3.0	2.9	2.7	84	65	74	NE 4	NNE 4	NNE 3	8	8*	4	2.6	✱ n bis 7¹⁵ a, ✱ sch. von 8⁴⁵ a an.
20	07.4	09.8	11.4	-5.8	-5.2	-7.0	-7.6	1.8	2.2	1.9	59	81	73	ENE 4	ESE 3	ENE 3	8	10*	10*	1.8	✱ n, ✱ sch. von 8³⁰ a an, ✱ p.
21	12.5	11.8	09.7	-8.8	-8.6	-8.2	-11.8	1.8	1.8	**1.6**	73	72	88	0	W 4	WSW 5	5	9	2	5.2	✱ n.
22	04.7	06.1	08.6	**-12.8**	-8.6	-6.1	-8.4	2.2	2.0	2.1	90	67	83	ESE 4	SE 4	E 3	10	10	10*	0.8	✱ n, a von 9¹⁵ a an, p.
23	11.1	14.9	14.4	-11.0	-9.2	-8.0	-9.8	2.0	1.9	2.0	85	76	93	SW 5	W 3	SW 4	4	4	0	9.6	✱ n, ✱ sch. 8¹⁵ - 10⁵⁰ a.
24	17.9	23.0	24.4	-10.7	-4.6	-5.8	-5.2	2.8	2.0	2.7	86	68	85	NW 3	W 2	NW 2	5*	3	0	1.8	✱ n, ✱ sch. a bis 11¹⁵ a, 2²⁰ - 4¹⁰ p.
25	22.1	23.2	23.8	-9.3	-4.5	-2.0	-3.6	2.3	2.9	2.1	71	74	58	W 3	N 5	NW 4	4	10*	5	0.0	✱ sch. von 8⁴⁵ a an, p.
26	20.4	20.6	20.9	-6.3	-5.8	-3.0	-4.0	2.2	2.7	2.9	73	74	85	NW 3	NW 3	NW 3	8	10*	10*	1.1	✱ n, ✱ sch. von 8³⁰ a an.
27	21.4	22.7	22.9	-6.0	-4.2	-3.4	-4.0	2.8	3.1	3.1	85	85	89	NW 3	NNW 3	WSW 2	10	8	10*	1.1	✱ n, ✱ sch. 9 a - 12³⁰ p, ✱ p.
28	24.3	25.9	**28.1**	-4.2	-2.8	-4.0	-7.0	2.4	2.3	2.0	63	67	74	S 4	SSW 5	S 6	8	10	10*	2.2	✱ n, p von 5³⁰ p an.
M.	99.4	00.1	00.5	-5.5	-3.5	-3.3	-4.0	2.9	2.9	2.8	80	78	81	3.8	4.2	4.2	7.4	7.7	6.6	42.2	

$H = 6$ m, $H_b = 6.8$ m — $\varphi = 70^0\ 22'$ N

$C_g = 2.05$ mb bei 990 mb — $\lambda = 31^0\ 8'$ E

März.

Datum.	Luftdruck. 900 oder 1000 + 8	2	7	Luft-Temperatur. Min.	8	2	7	Absolute Feuchtigkeit. 8	2	7	Relative Feuchtigk. 8	2	7	Richtung und Stärke des Windes. 8	2	7	Bewölkung. 8	2	7	Niederschl.	Bemerkungen.
1	26.8	24.7	23.4	-10.5	-9.8	-9.2	-9.4	**1.3**	1.4	1.4	61	62	61	SE 6	SE 5	SSE 4	8	9	2	0.0	✱ n.
2	19.5	18.8	18.3	-10.4	-8.8	-9.2	-11.9	1.0	2.0	1.6	83	86	87	S 4	SSE 4	SW 4	9✱	10✱	10✱	0.0	✱ von 7^{30} a an, p.
3	18.4	17.3	15.4	**-12.6**	-9.6	-10.6	-7.4	2.0	1.7	2.0	89	85	77	SW 4	SW 3	S 5	10✱	6	4	1.1	✱ n, ✱ sch. a.
4	05.7	02.4	01.0	-11.0	-8.4	-7.6	-7.4	2.1	2.3	2.3	87	87	86	S 4	SSE 4	SE 5	10✱	10✱	10	0.0	✱ n, ✱ sch. a, p.
5	01.6	00.5	00.2	-9.2	-7.8	-8.0	-9.0	2.1	2.1	1.7	81	86	73	SE 6	SE 5	E 5	10✱	10✱	8	3.0	✱ n, a, p.
6	98.5	97.5	97.2	-11.1	-10.1	-9.4	-9.6	1.8	1.9	**1.3**	82	84	59	ESE 4	E 3	SE 4	10✱	10✱	7	5.5	✱ n, ✱ sch. a, p.
7	96.6	97.0	99.1	-11.1	-7.6	-6.2	-5.8	2.0	2.2	2.2	76	75	74	SE 4	SSE 4	SSE 3	9✱	10✱	9	4.2	✱ n, ✱ sch. a bis 4^{30} p.
8	03.5	04.5	05.8	-8.3	-5.8	-4.8	-5.2	2.5	2.3	2.6	81	71	82	ESE 5	E 5	E 4	10✱	10✱	10✱	6.7	✱ n, ✱ sch. a, p.
9	08.1	09.8	11.2	-7.0	-5.8	-4.8	-5.2	2.5	1.9	1.6	83	57	51	E 4	ESE 4	ENE 3	10✱	7	8	2.7	✱ n, ✱ sch. a bis 12^{15} p, p.
10	15.4	18.8	20.9	-6.4	-5.4	-4.4	-5.8	2.2	1.7	1.9	73	51	62	ENE 3	NE 2	ENE 1	9✱	7	10✱	1.4	✱ n, ✱ sch. a bis 11 a, p von 3^{30} p an.
11	25.7	28.5	29.0	-10.5	-9.0	-9.4	-9.6	1.5	1.4	1.9	62	62	87	WSW 4	SW 5	SW 5	6	2	2	4.0	✱ n.
12	33.0	34.3	**35.4**	-10.6	-10.0	-6.2	-4.6	2.0	2.4	2.7	91	84	84	WSW 3	0	SSE 2	2	8	5		✱ sch. 2^{50}-5^{20} p.
13	31.5	27.3	24.3	-10.4	-4.6	-5.2	-5.8	2.7	2.6	2.7	84	84	90	E 5	SE 5	ENE 5	10	10✱	10✱	0.1	✱ n, ✱ sch. von 9^{10} a an, ✱ p.
14	23.9	26.8	27.1	-8.3	-7.8	-5.2	-5.0	2.0	2.2	2.0	80	71	61	SW 5	SW 4	S 3	9	6	10	5.6	✱ n.
15	26.5	26.4	25.1	-9.1	-4.6	-1.4	-2.0	2.9	2.8	3.2	88	60	81	N 4	N 4	NNE 5	10✱	8	10✱	0.2	✱ n bis 9^{30} a, von 5^{30} p an.
16	21.9	20.8	18.0	-4.8	-1.6	-1.0	-2.8	3.9	3.6	3.3	94	84	90	ENE 4	0	S 2	10✱	10✱	10✱	6.7	✱ n, a, p.
17	15.2	16.7	15.8	-6.1	-5.8	-8.4	-8.1	2.1	2.1	2.1	70	83	84	SW 4	SW 4	W 2	10✱	3	10	8.8	✱ n bis 8 a.
18	08.2	03.6	00.0	-10.2	-5.6	-3.0	-3.6	2.5	3.1	3.0	83	84	86	WSW 5	SW 6	SW 4	10	10	10✱	0.4	✱ n, ✱ sch. p.
19	91.6	90.6	88.9	-5.6	-4.2	-0.2	-0.8	2.9	3.9	3.2	86	85	74	WSW 4	W 2	NNW 3	0	10✱	7	1.4	✱ n 10^{30} a-3^{15} p.
20	87.0	88.4	89.0	-4.8	-0.4	0.4	-0.8	3.6	4.1	3.9	80	86	88	WNW 1	NNE 2	0	10	10	10	1.7	✱ n, ✱ sch. 8^{45}-11^{30} a, p.
21	90.1	92.1	93.3	-2.8	0.0	-1.2	-1.4	3.1	3.6	3.3	68	86	79	NNE 4	NW 5	N 4	10✱	10✱	9✱	2.8	✱ n, ✱ sch. a, ✱ p.
22	94.3	99.4	02.0	-1.8	0.0	0.2	-0.2	3.7	3.9	3.8	80	84	84	NE 4	NNE 5	N 4	9	9△	3	10.4	✱ sch. n, △ sch. 8^{10} a-3^{8} p.
23	06.9	08.0	08.7	-6.6	-4.2	-3.8	-5.8	2.8	2.9	2.4	83	83	80	WNW 1	W 3	SW 3	2	0	0	2.1	✱ n.
24	10.2	11.6	11.9	-7.9	-7.0	-5.4	-5.6	2.3	2.5	2.4	86	83	80	SW 4	SW 4	WSW 3	5	2	2		
25	13.2	14.7	14.9	-7.2	-6.0	-4.0	-5.2	2.4	2.4	2.2	83	70	71	WSW 2	WSW 3	W 2	2	5	10		
26	18.1	16.8	19.0	-6.3	-1.0	0.8	-1.8	3.5	3.6	3.6	82	73	90	0	0	0	10✱	10✱	7	1.0	✱ n, ✱ sch. a, ✱ p.
27	20.5	24.5	24.7	-3.0	-1.8	-1.2	-3.2	2.5	3.0	2.9	62	71	80	SE 3	SE 3	SSE 5	5	9	6	2.2	✱ n, 8^{5} a-12^{50} p, ✱ sch. p.
28	24.2	23.9	23.9	-7.1	-6.8	-3.8	-5.4	2.1	2.2	2.0	74	64	63	SW 3	SW 4	S 4	4	10	10	1.3	✱ n, 2^{30}-3^{15} p.
29	24.1	23.2	20.8	-8.8	-6.6	-5.6	-5.2	2.1	2.2	2.3	75	73	76	SW 5	SSE 5	SSW 5	10✱	10	10✱	0.0	✱ n a, ✱ sch. p.
30	07.8	00.7	95.8	-6.6	-4.2	-6.4	-6.6	2.2	2.4	2.2	68	85	79	ESE 6	SE 5	SSW 5	10	10	10✱	0.1	✱ n, a, p.
31	83.9	77.1	**75.3**	-7.8	-2.8	-0.6	**1.8**	3.1	4.0	**4.4**	85	92	84	SW 6	S 7	SW 6	10✱	10✱	10	3.0	✱ n, a, ● ✱ sch. p bis 6^{30} p.
M.	11.4	11.2	10.8	-7.9	-5.6	-4.7	-5.1	2.5	2.6	2.5	79	77	78	3.9	3.7	3.6	8.0	8.4	7.7	76.4	

April.

Datum.	Luftdruck. 8	2	7	Luft-Temperatur. Min.	8	2	7	Absolute Feuchtigkeit. 8	2	7	Relative Feuchtigk. 8	2	7	Richtung und Stärke des Windes. 8	2	7	Bewölkung. 8	2	7	Niederschl.	Bemerkungen.
1	86.9	92.4	95.0	-5.8	-4.6	-2.4	-3.0	2.5	2.7	2.7	76	72	74	W 4	WSW 2	SW 3	0	10	10	2.8	✱ n.
2	95.3	96.6	98.8	-6.6	-5.2	-2.2	-6.2	2.3	2.3	**1.9**	73	61	64	WSW 3	NNW 2	WSW 4	2	1	3		
3	94.8	93.4	92.5	-6.9	-0.4	0.4	0.4	2.9	3.5	4.1	64	74	86	SSW 7	SW 4	SW 3	10	10✱	10✱		✱ sch. von 9^{10} a an, p.
4	**86.8**	92.6	04.9	-1.0	0.6	-2.0	-4.0	4.3	3.2	2.3	89	80	68	SSW 1	NE 8	N 7	10✱	10●✱	10✱	4.2	✱ n, a, ✱ sch. p.
5	15.7	04.1	94.8	**-9.7**	-6.2	-2.8	-0.8	2.1	2.7	3.9	72	73	89	WSW 3	SE 8	SW 7	10	10✱	10✱	6.7	✱ n, a, p.
6	10.3	17.4	17.3	-6.2	-0.8	-0.8	-4.4	3.1	3.1	2.5	73	71	73	NE 5	NE 3	WSW 1	10✱	7	0	5.0	✱ n, ✱ sch. bis 10^{30} a.
7	02.2	03.7	07.9	-4.6	0.4	1.6	-1.6	3.6	3.9	3.0	76	76	75	SW 5	NNW 3	NW 4	8	10●✱	8	0.0	● ✱ sch. 12^{20}-2 p.
8	15.4	16.2	12.9	-3.8	-2.6	-0.6	1.0	3.2	3.7	4.1	84	84	83	NE 2	NW 3	SW 4	10✱	10	10	5.3	✱ n, a bis 12^{40} p.
9	03.6	02.8	03.5	-2.6	3.2	3.2	2.8	4.8	3.0	4.8	84	84	86	WNW 3	W 4	W 5	10	10	7	0.6	
10	13.5	20.8	25.6	-2.3	-1.8	-4.0	-4.2	3.3	2.9	2.8	84	84	84	NW 7	NW 5	NW 5	10✱	10✱	10✱	2.0	● ✱ n, ✱ sch. a, p.
11	25.3	23.4	22.0	-5.1	-4.2	-1.2	-2.0	2.8	3.5	3.3	83	84	83	W 3	W 2	W 1	10✱	10	10	0.5	✱ sch. n bis 10 a.
12	14.2	13.6	13.5	-4.2	-0.4	0.6	-0.8	3.8	4.1	3.6	85	84	83	S 3	S 2	SSE 3	10●✱	10●✱	10●✱	3.0	✱ n, ● ✱ a, ● ✱ sch. p bis 7^{15} p.
13	14.7	14.5	12.0	-1.6	-0.6	0.4	-0.2	2.7	2.9	3.3	63	61	74	SSE 2	SW 3	SSW 4	10	10	10	2.2	
14	09.3	11.3	12.6	-0.8	2.8	2.6	3.0	4.2	4.7	4.7	74	84	84	SW 3	WNW 2	W 2	10	10	10		● 1^{15}-6^{10} p.
15	09.4	08.0	04.8	-0.8	2.2	3.6	4.4	4.5	4.3	4.2	84	73	67	SW 3	SW 3	SW 3	0	0	0	0.1	
16	01.9	99.6	97.4	0.4	2.2	4.0	4.0	4.0	**5.2**	4.8	74	85	79	SSW 2	S 3	S 3	10	9	5		● sch. 8^{30} a-12^{30} p.
17	95.7	96.9	96.6	0.8	4.6	**4.8**	3.8	4.6	4.7	5.0	73	73	84	SW 3	S 3	S 2	9	10	10	0.0	
18	93.3	92.3	91.4	2.0	4.0	4.0	2.6	**5.2**	4.8	4.7	85	79	85	S 2	S 3	SSW 2	9	10	10	0.4	● n.
19	96.0	00.9	04.8	1.1	1.2	-0.2	-1.2	4.4	3.4	3.2	88	75	76	N 4	N 5	N 4	10●	10●✱	10✱	0.5	● n, ● ✱ a, ✱ p.
20	10.6	12.8	12.9	-2.7	-1.2	-0.6	-1.8	2.5	3.0	3.0	60	68	74	NE 3	SW 2	0	10	10	10	1.6	✱ sch. n, a, 2^{30}-6 p.
21	13.5	13.3	13.7	-5.2	-2.0	-0.2	-1.8	2.8	3.2	2.9	72	71	72	SSE 3	SSE 3	SSE 3	10●✱	5	8	6.9	✱ n, ● ✱ sch. a bis 1^{10} p.
22	15.4	16.8	17.5	-3.6	-1.4	-1.0	-3.0	2.8	2.7	2.6	69	63	72	SE 5	SE 5	SE 5	10	10	8	0.0	
23	19.3	19.1	18.3	-7.6	-5.4	-3.6	-3.6	2.3	2.6	2.6	74	73	72	SSE 5	SSE 5	SSE 5	8	3	0		
24	17.3	16.4	13.1	-5.8	-1.8	-1.2	-1.8	2.9	2.6	2.5	73	63	62	SE 5	SE 4	SE 5	5	0	2		
25	02.1	94.7	92.5	-3.2	-2.0	-1.6	-1.8	3.3	3.5	3.3	82	86	84	S 5	SSE 3	W 2	10✱	10✱	10	1.4	✱ n, a, p bis 6^{15} p.
26	88.4	92.3	98.1	-3.4	0.6	1.4	-0.4	3.9	4.2	3.6	80	84	77	WNW 3	NNE 4	N 5	10	10✱	10	7.5	✱ n, ✱ sch. von 10^{45} a an, ● ✱ sch. p.
27	09.9	14.3	15.4	-3.4	-1.4	-1.8	-3.2	2.4	2.5	2.7	58	61	73	NE 4	NE 3	ESE 2	10✱	7	7	2.5	✱ sch. n, a, p.
28	14.5	15.2	13.9	-6.0	-3.8	-2.0	-1.4	2.9	3.3	3.0	83	83	73	NW 2	NW 2	N 3	7	10●✱	10	3.5	✱ n, ● ✱ sch. von 9^{30} a an, ✱ sch. p..
29	18.3	23.7	26.8	-5.8	0.0	-0.2	-1.0	2.6	3.6	2.7	57	80	64	N 2	E 3	NE 3	5	9✱	9	3.8	✱ sch. n, a, p.
30	**29.5**	29.1	27.8	-4.6	0.0	1.4	-0.2	3.8	2.9	2.8	84	57	62	N 3	E 1	SE 3	8	10	10	1.0	● ✱ n, 11^{45} a-12^{30} p.
M	07.4	08.3	08.6	-3.6	-0.8	0.0	-0.9	3.4	3.4	3.4	76	75	76	3.5	3.4	3.4	8.4	8.4	7.9	61.5	

Vardø. **1925.**

$H = 6$ m, $H_b = 6.8$ m — $\varphi = 70^0\ 22'$ N

$C_g = 2.05$ mb bei 990 mb — **Mai.** — $\lambda = 31^0\ 8'$ E

Datum.	Luftdruck. 900 oder 1000 + 8	2	7	Luft-Temperatur. Min.	8	2	7	Absolute Feuchtigkeit. 8	2	7	Relative Feuchtigk. 8	2	7	Richtung und Stärke des Windes. 8	2	7	Bewölkung. 8	2	7	Niederschl.	Bemerkungen.
1	22.1	18.3	14.1	-1.7	-0.2	-0.4	-0.4	2.8	3.1	4.0	63	68	89	ESE 4	ESE 5	ESE 4	10	10	10*	0.1	✱ n, von 2 p an.
2	05.5	06.8	06.4	-1.4	2.4	2.0	1.4	4.4	4.3	4.0	80	80	79	S 3	SW 3	S 3	9	10	8	8.8	● ✱ n.
3	10.0	15.2	18.0	-0.6	2.2	2.4	1.2	4.0	4.8	4.3	74	88	86	NW 3	NW 3	NW 2	10	10●	10●*		● von 11 a an, ● ✱ sch. p.
4	17.6	12.5	08.5	-1.6	2.4	3.4	2.8	4.6	4.6	4.8	84	78	85	SE 4	SE 4	SE 5	10●	10	10●	0.0	● n, a, p.
5	**02.1**	03.5	09.8	1.8	3.2	1.8	1.4	4.6	4.3	3.5	80	82	69	SW 3	NNW 5	N 6	0	10●*	10●*	3.3	● n, ● ✱ von 11^{45} a an, p.
6	18.8	20.7	19.9	-3.1	-1.8	-2.2	-2.4	**2.5**	2.8	2.7	64	71	71	NW 5	NNW 5	NW 4	10	10*	10	0.2	✱ sch. n, ✱ a, ✱ sch. p.
7	20.4	21.2	20.5	**-4.8**	-3.0	-2.8	-3.0	3.1	3.1	2.7	84	85	74	NW 3	NW 3	W 3	10*	10*	10	5.1	✱ n, a, ✱ sch. p.
8	18.2	17.7	17.3	-4.2	-0.4	1.0	0.2	2.8	2.7	3.1	63	55	66	WNW 4	SW 3	SW 3	10	4	10	7.6	✱ n.
9	19.0	18.3	15.0	-3.8	1.6	3.0	2.8	3.2	3.6	4.6	61	63	82	WSW 2	SSE 3	SSE 4	1	4	10		
10	09.3	10.2	12.3	1.2	4.8	6.6	5.2	5.2	5.2	5.2	81	72	79	SSW 4	SW 2	N 0	3	5	9		
11	12.5	15.1	16.9	2.2	4.6	4.0	3.2	5.3	4.5	4.4	85	73	77	N 2	N 4	NNW 3	10	10●	10●		● von 10 a an, p.
12	17.5	16.5	14.6	1.6	4.4	4.8	3.4	4.8	4.9	4.4	77	76	76	SSW 3	S 3	SSE 3	10	7	8	0.0	● n.
13	11.0	12.0	12.4	1.6	3.2	3.4	3.2	4.9	5.1	5.4	85	87	93	0	0	0	10●	10●	10●	0.0	● n, a, p.
14	12.3	13.3	16.3	2.2	3.4	4.4	3.6	4.9	5.0	4.9	84	81	84	N 3	NNE 1	S 1	10	10	10	0.0	≡ p.
15	14.3	15.3	15.0	2.3	4.8	5.8	5.4	5.4	5.6	5.4	85	82	80	SW 2	WNW 2	NW 2	10	10	10	0.8	● n.
16	16.4	17.7	19.0	1.7	4.0	6.0	5.4	5.2	5.8	5.5	85	84	82	0	NW 2	0	10●	6	9	0.4	● n bis 8^{40} a.
17	21.8	**23.7**	22.4	3.0	6.0	5.2	4.2	4.8	4.1	4.5	69	61	73	NNW 2	NNW 0	S 3	8	10	8	0.0	● n.
18	12.5	09.5	06.0	3.4	5.6	7.4	**8.0**	4.8	5.4	5.5	72	70	68	SW 4	SW 2	W 4	10	10	6		● 8-12 a.
19	08.5	10.3	10.1	3.4	3.8	3.4	1.6	4.2	4.9	4.0	70	84	79	NW 4	NW 5	NW 6	10	6	10●*	0.0	● n, 8^{10}-11^{45} a, ● ✱ p.
20	12.3	12.8	12.7	0.1	1.0	0.8	-0.2	3.4	3.3	3.3	70	67	73	N 4	NW 4	N 4	10*	10	10*	0.9	✱ n, a, ✱ sch. p.
21	12.6	13.1	12.5	-2.4	-0.4	-0.4	-1.0	2.9	2.9	3.1	65	64	72	N 3	N 3	0	10*	10*	10*	0.0	✱ sch. n, a, p.
22	12.4	12.5	12.0	-2.1	0.0	-0.6	-0.8	3.5	3.2	3.3	76	73	76	NE 4	NE 4	NE 3	10*	10*	10*	0.5	✱ sch. n, a, p.
23	11.3	11.6	12.3	-2.8	-1.0	-1.2	-1.0	3.6	3.5	2.6	85	84	62	N 4	NNE 4	N 4	10*	10*	10	1.9	✱ sch. n, a, p.
24	13.0	13.6	14.0	-2.4	-1.2	0.0	-0.2	3.5	3.8	3.6	84	84	79	NNW 3	N 3	0	10*	7	10*	0.5	✱ sch. n, a, p.
25	12.5	12.3	11.2	-3.4	1.6	3.2	3.8	3.1	3.2	3.7	59	55	61	0	S 3	S 4	5	2	5	0.0	✱ n.
26	09.6	11.6	13.5	-0.8	1.4	1.8	0.8	3.4	3.2	2.7	66	62	56	NW 4	NNW 5	NNW 4	4	7	4		✱ 9^{40}-10^{30} a.
27	17.0	18.9	19.5	-1.4	-0.2	1.6	1.4	3.8	3.2	3.1	83	62	61	WNW 3	N 3	NW 3	10*	10	5	1.2	✱ n, 8-10 a.
28	19.2	19.1	18.4	-2.1	3.6	3.6	2.8	3.7	4.2	4.8	62	70	86	SSE 3	SE 3	ESE 3	10	10●*	10●*	0.0	● ✱ von 12^{20} p an.
29	16.7	15.4	14.0	2.2	4.8	6.2	7.0	5.4	5.7	**6.2**	85	81	82	SE 4	S 4	S 5	10	10●	10	1.0	● n bis 10 a, p bis 4^{30} p.
30	14.3	14.9	14.0	4.4	6.4	6.6	4.2	6.0	6.0	5.2	84	83	86	0	WSW 2	SSE 3	8	10	10	0.0	● n, ≡ a, p.
31	11.6	10.4	09.0	2.5	3.8	5.4	4.8	5.1	5.4	5.3	85	80	83	SE 5	SE 5	SE 5	10	10	10		
M.	13.9	14.3	14.1	-0.2	2.3	2.8	2.2	4.2	4.2	4.2	76	74	76	3.0	3.2	3.0	8.6	8.6	9.1	32.3	

Juni.

Datum.	Luftdruck. 900 oder 1000 + 8	2	7	Luft-Temperatur. Min.	8	2	7	Absolute Feuchtigkeit. 8	2	7	Relative Feuchtigk. 8	2	7	Richtung und Stärke des Windes. 8	2	7	Bewölkung. 8	2	7	Niederschl.	Bemerkungen.
1	06.8	06.5	07.2	3.8	6.4	6.0	6.6	6.3	5.9	7.1	88	86	98	SE 4	SE 4	S 2	3	0	8		
2	08.6	10.4	11.5	4.2	6.4	6.0	6.0	5.7	6.8	6.6	79	97	94	N 2	N 3	NNW 2	10	10●	10●		≡ a, ● von 11^{30} a an, ≡ u. ● p.
3	12.6	14.2	14.0	5.2	7.2	6.6	5.4	6.3	7.1	6.3	83	98	94	NNW 3	NNW 3	NW 3	10	10	10	0.7	✱ n.
4	15.2	16.8	18.4	4.2	6.2	6.2	4.2	6.5	6.2	6.0	91	88	97	NNW 3	NNW 3	W 3	10	10	10●		● von 3^{30} p, an.
5	23.6	26.2	26.5	1.6	3.6	4.2	2.4	4.0	4.4	**3.7**	67	71	68	ESE 2	SE 2	SE 2	10	10	10	0.5	● ✱ n.
6	25.0	22.5	20.8	**0.8**	3.8	6.0	5.6	4.1	4.9	5.8	67	70	85	S 3	SSE 3	S 2	10	4	8		
7	16.6	16.5	15.9	1.0	5.8	7.4	5.8	6.1	6.2	6.3	88	80	91	N 3	ENE 2	SSE 1	10	10	10	0.6	● n, 2^{30}-4^{10} p.
8	16.2	19.7	20.1	2.2	3.2	5.0	6.6	5.4	6.1	6.4	93	91	88	NE 4	N 3	NW 1	10●	10≡	10	25.0	● ^{2} n, ● a.
9	18.3	18.1	18.0	3.2	6.0	5.8	4.6	6.4	5.8	4.9	91	85	78	S 2	SSE 3	SE 3	10	10	10	1.5	● n.
10	18.0	19.5	20.1	3.2	5.2	6.0	5.2	5.0	5.1	6.2	75	74	94	E 2	ESE 2	S 1	10	10	10	0.8	● n.
11	15.2	11.0	07.5	4.0	7.0	6.0	5.8	5.5	5.5	6.3	74	79	91	S 3	SSE 3	SE 2	10	10	10●		● von 4^{15} p, an.
12	01.0	01.1	02.3	4.7	7.0	8.2	4.4	6.4	6.8	5.8	85	83	93	0	E 2	E 2	10≡	10●	10●	1.8	● n, a, p.
13	04.2	04.2	02.9	2.4	4.0	4.6	3.0	4.0	4.3	4.5	77	68	79	SE 3	WSW 2	SE 4	10	10	10	0.0	
14	02.1	02.7	03.3	2.4	4.4	4.4	3.6	4.3	4.3	4.3	68	68	73	SSE 3	ESE 3	ESE 3	10	7	10		
15	04.7	05.2	05.1	2.2	3.2	4.6	4.4	5.2	4.7	5.6	90	74	90	SE 3	SE 4	SE 4	10	3	5		
16	02.4	02.2	02.0	2.7	4.4	5.2	4.4	5.0	5.0	4.8	80	75	77	WSW 5	SW 4	S 3	10	10	8		
17	02.3	04.0	05.1	2.4	4.2	5.2	4.0	4.4	4.6	4.7	71	69	77	E 3	E 2	ESE 1	10	10	10		
18	07.0	08.1	09.4	2.5	4.6	5.6	5.8	4.9	5.8	5.0	78	85	73	N 3	NE 3	ENE 1	9	9	9		● 8^{10} a-12^{30} p.
19	11.0	12.1	12.6	3.4	4.8	5.6	3.8	5.0	4.9	5.2	78	73	87	NE 2	NE 2	NE 1	10	10	10	0.0	
20	13.5	15.1	15.5	2.4	4.0	5.0	3.6	4.7	4.9	4.7	77	75	80	NE 2	NNE 2	NE 2	10	10	10		
21	17.6	18.8	19.5	2.2	5.6	5.8	4.8	5.3	5.6	5.2	79	82	81	ENE 2	ESE 3	ESE 2	6	5	9	0.3	● n, 5^{40}-6^{20} p.
22	20.4	21.2	20.3	3.5	6.6	6.8	5.0	5.2	4.4	4.9	71	60	75	E 2	E 2	E 2	10	10	5	0.0	● n.
23	17.9	17.9	19.0	4.0	7.8	8.6	8.4	6.4	6.5	6.4	81	78	78	SSE 3	SSE 2	SE 1	0	1	8		
24	16.4	15.5	15.2	5.5	8.0	9.8	8.2	6.7	6.7	6.3	83	74	78	SE 3	SE 2	SE 2	9	9	10		
25	12.7	07.8	05.2	4.2	6.0	6.2	5.8	6.6	6.5	6.7	94	91	97	E 2	ENE 2	ESE 2	10	10●	10●		≡ a, ● von 9^{50} a an, p.
26	**99.2**	**99.2**	99.3	5.4	9.4	**14.0**	13.0	7.5	**9.5**	8.6	87	80	77	0	S 3	S 3	10	5	5	27.0	● n, ≡ bis 9 a.
27	01.2	04.3	05.8	8.6	**14.0**	10.0	8.8	7.7	6.6	7.1	65	72	84	SSW 3	NNE 1	N 1	4	9	10		
28	09.4	11.3	12.3	5.2	6.0	5.4	5.8	5.9	5.9	6.1	85	87	88	N 4	N 4	N 3	10	10	10●		● p.
29	15.7	19.0	21.5	4.8	5.8	6.0	5.4	6.1	6.1	6.3	88	88	94	N 3	N 4	N 3	10●	10	10	0.0	● n bis 10^{45} a.
30	25.0	**26.6**	26.1	4.8	6.6	9.4	8.6	6.4	7.2	7.2	88	82	87	N 2	SSE 2	S 1	10	8	7	0.0	
M.	12.0	12.6	12.7	3.6	5.8	6.5	5.6	5.6	5.8	5.8	81	79	85	2.6	2.7	2.1	9.0	8.3	9.1	58.2	

Vardø. 1925.

H = 6 m, H_b = 6.8 m

C_p = 2.05 mb bei 990 mb

$\varphi = 70^0\ 22'$ N

$\lambda = 31^0\ 8'$ E

Juli.

Datum.	Luftdruck. 900 oder 1000 + 8	2	7	Luft-Temperatur. Min.	8	2	7	Absolute Feuchtigkeit. 8	2	7	Relative Feuchtigk. 8	2	7	Richtung und Stärke des Windes. 8	2	7	Bewölkung. 8	2	7	Niederschl.	Bemerkungen.
1	26.5	26.6	26.7	6.6	7.4	11.0	6.0	6.8	5.3	6.8	89	54	97	N 2	NE 2	ENE 2	0	0	10		≡ von 4 p an.
2	26.9	26.3	24.8	**4.6**	7.8	9.4	9.4	7.0	7.2	7.2	89	82	82	SE 2	SSE 3	S 3	10	10	3		≡ a.
3	23.3	25.4	26.0	7.8	12.4	8.2	7.6	7.2	7.4	7.1	68	92	91	N 3	NW 5	N 3	7	10=	10		≡ von 12^{45} p an.
4	**27.9**	**27.9**	26.3	9.4	9.0	10.6	8.8	6.5	6.6	6.6	76	70	78	NE 2	SSE 2	S 3	10	10	0	0.0	● n.
5	24.3	22.7	26.1	6.9	7.6	9.0	7.2	6.5	6.7	6.7	83	78	89	E 2	E 3	SE 2	10	10	10		
6	14.0	14.5	14.9	5.6	8.0	8.6	7.0	7.3	7.0	7.0	92	84	94	SE 1		NE 3	10=	10=	10		≡ n, a, p.
7	15.8	15.3	13.8	6.2	7.4	8.0	7.0	6.7	6.7	7.0	88	83	94	SE 3	SSE 3	SE 4	10	10	10=		≡ n, p.
8	07.8	08.9	10.0	6.6	9.2	10.2	9.4	8.4	8.3	7.9	98	90	89	S 3	NW 3	NNW 3	9	10	8	15.0	● 2 n, ● sch. von 2^{30} p an.
9	09.4	09.0	08.6	8.4	11.6	12.2	11.2	8.2	8.8	8.9	80	84	90	S 3	S 3	S 1	1	0	4	0.5	≡ n.
10	08.0	07.4	06.1	10.0	14.2	14.2	15.8	10.7	10.4	9.7	90	87	73	S 1	S 1	SE 3	4	4	8	9.6	● 2 n, ● 3^{30}-4^{30} p, K.
11	04.1	04.4	04.7	10.8	**18.0**	17.2	15.4	11.2	**12.5**	11.3	73	86	87	S 3	S 3	S 2	1	5	3	0.5	● 2 12-12^{45} p, K.
12	09.5	12.4	14.0	10.6	11.2	9.0	8.2	8.2	7.6	7.7	83	89	94		0 N	4 N	3	10	10	1.8	● 4^{45}-6^{10} p.
13	17.3	18.4	18.8	7.9	10.0	11.4	10.0	7.7	8.1	7.7	84	81	84	N 1	S 3	S 1	10	10	10	0.0	● 5^{30}-6^{15} p.
14	23.5	25.5	25.0	8.4	10.0	11.0	9.4	8.2	8.1	7.9	89	83	89	NNW 3	N 3	N 3	10	9	4	1.4	● n.
15	25.5	24.6	24.6	7.7	10.8	10.8	9.6	8.4	7.7	7.2	89	81	82	S 3	SE 3	SE 3	3	0	0		
16	22.4	21.7	21.0	7.9	10.0	9.8	9.6	7.0	7.6	8.0	76	84	89	SSE 3	SSE 3	SE 2	8	1	9		
17	20.5	20.1	19.6	7.1	10.6	11.6	10.8	9.0	9.9	8.2	95	98	85	S 3	SE 3	SSE 3	6	6	0		≡ n, a.
18	17.0	16.0	14.8	7.8	11.8	13.4	13.0	8.8	9.1	9.1	86	80	82	S 3	S 3	S 2	1	0	0		≡ n.
19	13.2	13.2	15.4	8.6	9.0	9.6	9.6	8.3	8.4	8.4	97	95	95	N 2	N 3	N 4	8	10	10		≡ n, a, p.
20	19.4	20.7	20.6	8.4	9.4	10.8	10.0	7.2	7.3	8.0	82	75	87	N 2	ENE 1	S 2	10	5	8		
21	18.5	18.5	17.8	9.2	14.8	16.6	13.8	9.3	10.6	9.9	74	75	85	N 1	SSE 2	S 1	8	8	10		
22	18.7	16.5	15.7	9.2	10.0	12.4	11.4	8.9	9.7	9.3	98	91	93	S 3	SSE 1	0	10●	10●	10	0.6	● n, a, p.
23	15.0	15.3	11.2	9.0	12.0	13.4	12.6	9.2	9.6	8.8	89	85	82	SSW 3	S 2	ESE 4	7	8	7	0.2	≡ n.
24	06.7	07.1	05.0	9.2	12.0	11.8	10.4	7.2	7.4	8.4	69	72	91	NW 3	E 1	SSW 3	10	7	7	0.2	● n, 8^{10} a-12^{15} p.
25	09.3	13.1	16.1	7.4	10.0	10.4	9.6	6.4	**5.2**	5.7	69	56	64	WNW 3	NW 4	NW 4	7	6	8	3.5	● 9^{45}-10^{20} a.
26	20.6	16.9	09.1	6.4	10.0	11.0	12.2	6.6	7.1	7.4	72	73	70	SSE 1	SE 3	S 4	9	10	8	1.1	● n.
27	**99.5**	05.4	08.8	9.0	16.0	9.0	8.2	8.8	7.6	6.3	69	89	78	SSW 5	N 4	N 2	10	10	10		● 10^{50} a-1^{15} p.
28	04.3	06.2	08.0	7.8	8.4	9.0	9.6	7.5	7.8	7.0	92	92	79	SE 2	N 3	N 3	10●	10●	10	12.1	● 2 n, ● sch. a, ● p bis 2^5.
29	10.3	12.2	13.6	7.4	8.2	8.8	8.2	6.3	6.2	5.5	78	73	68	N 4	NNE 3	NE 2	10	10	10	0.0	
30	13.8	11.7	09.0	6.9	8.6	9.4	8.4	6.5	7.2	7.8	78	82	94	E 3	ESE 4	SSE 4	10	10	10●	0.2	● n, 8^{30} a-12^{30} p, von 2^{40} p an.
31	04.2	04.9	04.8	6.9	9.4	10.6	9.4	8.6	8.6	8.3	98	91	95	N 2	N 3	NNW 3	10	10	10	3.4	● n, ≡ p.
M.	15.4	15.8	15.3	7.8	10.5	10.9	10.0	7.9	8.0	7.8	84	82	86	2.4	2.7	2.7	7.5	7.4	7.3	50.1	

August.

Datum.	8	2	7	Min.	8	2	7	8	2	7	8	2	7	8	2	7	8	2	7	Niederschl.	Bemerkungen.
1	04.9	06.7	07.1	8.4	8.8	8.4	7.2	7.8	7.1	7.1	92	87	94	N 3	N 4	NNE 3	10●	10●	10●	0.0	● n, a, p.
2	07.3	08.0	09.5	6.2	7.4	7.2	7.0	6.4	6.7	7.0	83	89	94	NNE 3	NNE 3	N 4	10	10●	10●	0.6	● n, von 10 a an, p.
3	09.0	10.2	10.2	6.6	7.4	9.0	8.0	7.0	6.3	6.7	91	73	83	NNE 3	NE 3	N 3	10	10	10	1.3	● n.
4	11.1	11.7	11.5	7.0	7.8	10.2	9.0	7.0	6.2	5.8	89	67	68	ENE 3	ESE 2	0	10●	10	10	0.0	● n bis 9^{30} a.
5	10.5	10.4	09.6	7.0	8.4	7.6	7.4	6.4	6.7	5.7	78	86	74	E 1	N 1	NNE 2	10	10	10	0.0	≡ von 11 a an.
6	08.2	10.4	12.7	5.4	7.0	7.0	6.8	6.8	6.4	5.7	91	85	77	NE 3	NE 3	NNE 2	8●	10	10	0.0	● n, a bis 2^{40} p.
7	11.7	12.3	13.0	5.4	6.4	7.2	7.2	6.3	6.4	6.1	88	84	80	N 3	N 4	N 3	10	10	10●	0.0	● von 2^{40} p an.
8	13.5	12.9	13.1	5.4	7.2	8.6	7.6	5.9	6.1	6.0	77	73	77	NW 3	S 2	E 1	10	1	5	0.0	● n.
9	14.4	16.6	17.4	6.7	8.6	9.8	9.0	7.0	6.7	7.0	84	74	81	N 3	NE 4	N 2	10	9	1		
10	16.2	13.2	11.0	**4.5**	10.8	14.4	15.2	8.7	8.7	8.5	90	72	66	S 2	S 2	S 2	5	0	1		
11	06.9	04.9	02.4	10.4	13.0	**15.4**	13.6	8.8	8.6	9.0	80	66	78	S 4	S 1	S 2	8	9	10		● sch. 4-5^{10} p.
12	00.7	04.3	06.9	11.5	14.0	13.0	10.2	9.2	8.8	8.6	78	80	93	NNW 3	0	0	10	8	6	0.0	
13	11.8	13.3	13.4	9.2	13.2	11.6	12.0	9.2	9.7	9.4	82	96	91	S 3	NE 1	0	4	10●	7		● 2 12^{50}-2^{15} p.
14	09.1	08.4	09.5	8.0	12.0	13.6	10.2	9.2	9.5	9.0	89	82	97	S 1	0 N	2	10	9	10	7.2	
15	12.1	13.5	14.6	8.0	8.2	8.4	8.2	7.7	7.5	7.7	94	92	94	NE 4	ENE 3	ENE 3	10●	10●	10●	1.0	● n, a, p.
16	15.4	15.4	14.5	7.2	8.6	9.0	9.4	7.8	8.1	8.1	94	95	92	E 3	ESE 3	ESE 2	10●	10●	10●	11.8	● n, a, p.
17	11.4	09.5	08.3	8.2	9.2	9.4	9.0	8.0	8.1	8.3	92	92	97	SE 4	SE 4	E 2	10●	10●	10●	0.1	● n, a, p.
18	05.3	06.8	08.8	8.3	8.8	9.0	8.6	8.2	8.1	7.9	98	95	95	N 4	N 3	N 3	10●	10=	10●	5.0	● n bis 8^{40} a, ≡ a, ● von 2^{30} p an.
19	09.9	11.3	12.2	6.8	7.4	7.6	6.2	6.8	6.5	6.5	89	83	91	N 4	NNE 4	N 3	10	10	10●	0.1	● n, von 4^{40} p.
20	14.7	16.6	17.4	5.8	6.2	7.0	6.2	5.8	5.8	5.6	82	77	79	N 3	NE 2	NNE 3	10	10	10	0.0	● n.
21	19.3	19.8	20.7	5.0	7.0	8.0	6.4	**4.9**	5.2	5.3	66	64	73	E 1	ESE 1	ESE 1	10	10	10		
22	21.2	20.6	19.9	6.2	6.8	7.8	7.4	6.3	5.7	6.6	86	72	86	S 4	S 2	SSE 2	10	0	0		
23	18.5	19.9	20.5	5.5	10.0	9.4	8.4	6.4	7.2	6.4	69	82	78	0	0	0	0	0	0		
24	21.0	19.9	19.1	5.5	8.0	8.8	10.6	7.6	6.8	7.6	94	81	80	S 1	S 2	S 2	10=	0	0		≡ a bis 9^{30} a.
25	17.1	17.6	17.5	7.6	13.4	11.4	10.0	8.8	8.6	8.0	77	86	87	0	0	0	0	0	0		
26	19.2	19.3	19.6	7.4	13.2	14.4	13.0	9.5	9.5	9.1	85	78	82	0	S 1	S 1	5	0	5		
27	20.7	**21.6**	21.1	10.8	15.0	15.2	12.6	9.2	9.3	9.1	72	72	85	S 1	S 1	S 1	0	0	0		
28	20.1	18.9	16.7	9.6	13.4	15.0	11.4	8.3	9.2	8.8	73	72	88	S 1	SSE 1	S 1	0	5	3		
29	11.9	10.6	09.5	8.6	10.6	13.2	11.4	8.1	8.5	8.6	85	75	86	S 3	S 1	SE 1	0	4	6		
30	05.5	03.7	02.7	7.6	11.4	11.2	12.0	8.3	8.7	8.9	83	88	86	0	SE 1	S 1	9	10=	10		≡ von 10^{30} a, ● sch. 2^{10}-5^{15} p.
31	01.4	99.2	**96.9**	11.0	13.0	14.0	12.0	9.8	**10.0**	9.2	89	85	89	S 1	S 1	S 2	10	9	3	0.5	
M.	12.3	12.5	12.5	7.4	9.8	10.4	9.5	7.6	7.6	7.5	84	81	85	2.3	1.9	1.7	7.7	6.9	6.7	27.6	

Vardø. **1925.**

$H = 6\,m$, $H_b = 6.8\,m$ — $\varphi = 70^0\ 22'$ N

$C_g = 2.05$ mb bei 990 mb — **September.** — $\lambda = 31^0\ 8'$ E

Datum.	Luftdruck. 900 oder 1000 + 8	2	7	Luft-Temperatur. Min.	8	2	7	Absolute Feuchtigkeit. 8	2	7	Relative Feuchtigk. 8	2	7	Richtung und Stärke des Windes. 8	2	7	Bewölkung. 8	2	7	Niederschl.	Bemerkungen.
1	91.5	90.9	91.2	10.0	12.0	**13.0**	11.0	9.2	8.8	8.1	89	80	83	S 3	S 2	E 1	9	6	3		
2	87.2	86.5	**84.9**	8.9	11.4	11.8	10.6	**9.8**	9.3	8.8	98	91	93	SSE 2	ESE 3	ESE 3	10●	10●	10●	2.6	◍ n, a, p.
3	85.1	90.2	92.8	9.8	11.2	12.0	10.6	7.7	8.9	8.6	78	86	91	SW 3	SSE 3	SE 3	9	1	4	3.7	◍ n.
4	96.5	97.5	96.4	8.6	9.2	9.2	9.0	8.4	8.4	8.3	98	98	97	ENE 1	NE 1	NNE 3	10=	10	10●		≡ n, a, ◍ von 2^{50} p, an.
5	94.3	97.3	98.5	8.4	9.6	9.8	9.2	8.7	8.6	8.2	98	95	95	NE 4	E 4	E 3	10●	10●	10●	5.8	◍ n, a, p.
6	01.0	02.7	03.4	8.6	9.2	10.2	8.8	8.4	8.6	8.2	98	93	98	NE 1	SE 1	ENE 1	10●	10	10	0.5	≡ u. ◍ n, ◍ a bis 12^{40} p, p von 3^{30} p, an.
7	03.9	05.1	05.6	7.4	8.0	9.0	8.4	8.0	7.2	7.1	00	84	87	NE 3	N 2	NNE 2	10●	10	9	1.4	◍ n u. bis 11^{30} a.
8	07.4	09.6	10.9	7.4	9.0	8.0	7.4	7.2	6.9	6.2	84	86	80	ENE 1	N 1	NE 2	10	10	10	0.0	◍ 8^{30} a - 12^{15} p.
9	13.4	15.0	15.4	6.2	6.8	7.4	5.6	6.1	5.5	5.5	83	72	82	NE 2	NE 1	E 1	10	10	10●	4.7	◍ von 2^{20} p an.
10	17.1	**18.0**	**18.0**	4.4	5.0	6.0	5.2	4.7	4.7	5.0	72	67	75	NE 2	N 3	NNE 2	9	10	7	0.2	◍ n.
11	17.6	16.3	14.8	3.7	5.2	8.0	5.6	5.4	5.4	5.5	81	67	82	0	SSW 3	S 3	6	9	6		
12	11.4	10.0	07.5	3.8	8.4	10.4	9.8	7.1	6.9	6.7	87	74	74	SW 2	SSW 3	SW 3	6	8	10		
13	03.9	04.0	04.9	3.8	9.0	9.8	6.6	7.6	7.6	7.1	89	84	98	W 2	WNW 2	N 4	10	10●	10●	2.4	◍ n, a, p.
14	08.5	07.5	05.1	4.8	6.8	8.4	7.6	6.1	5.1	7.3	83	62	94	0	S 2	S 5	10	9	10●	0.0	◍ n, von 4^{15} p an.
15	99.8	01.8	04.7	6.8	9.4	11.0	9.2	8.3	9.0	8.4	95	93	98	SE 2	0	NNW 5	10●	10●	6	1.6	◍ n, ◍ sch. a, p bis 6^{10} p.
16	08.2	08.3	08.4	7.2	7.8	6.0	6.4	5.9	5.5	5.9	75	79	83	WNW 3	NNW 5	NW 6	10	7	10●	0.9	◍ sch. 11^{15} a - 1^{10} p, von 4^{30} p, an.
17	19.2	22.5	23.7	3.6	5.2	5.0	5.0	6.4	5.3	4.5	97	81	69	N 4	N 4	N 2	8	7	10	1.1	◍ sch. n, 10^{15}- 11^{30} a.
18	25.3	25.3	24.5	2.2	5.0	6.0	5.6	5.3	4.9	5.1	81	70	75	S 1	S 3	S 4	10	4	10	0.0	
19	22.2	21.0	18.8	3.5	5.0	5.4	4.8	5.3	5.0	5.2	81	75	81	S 3	SSE 3	SSE 3	5	8	10		
20	16.7	16.1	15.3	3.2	4.2	5.2	3.6	5.0	5.0	5.3	80	75	90	SE 1	W 2	WNW 1	2	1	10		
21	13.7	12.8	11.2	**1.7**	3.2	5.2	6.6	5.2	5.2	5.2	90	78	71	SW 2	SSW 3	SSW 4	3	2	8		
22	07.0	05.7	03.2	3.2	6.2	7.4	8.0	6.0	6.6	6.9	86	86	86	S 4	SSE 3	ESE 4	10	10	10●	0.0	◍ n bis 7^{45} a, p von 5^{50} p an.
23	99.9	00.1	00.1	5.0	5.4	6.2	5.0	6.1	6.5	6.1	91	91	94	SE 4	S 3	SSW 2	10●	10●	10●	6.5	◍ n, a, p.
24	99.1	00.4	01.1	4.6	7.6	9.0	6.0	7.6	7.4	6.8	98	87	97	SSW 3	SSE 2	WSW 1	10	10	10	2.8	◍ n, ≡ a.
25	01.5	03.9	05.7	5.6	7.6	7.2	6.6	7.6	7.1	6.6	98	94	91	NE 2	NNE 2	0	10●	10●	10●	0.0	◍ n, a, p.
26	07.1	06.3	05.3	5.6	7.6	9.0	8.6	7.8	7.8	7.9	00	92	95	S 2	S 3	SW 2	10	9	10	0.9	◍ n, ≡ a.
27	07.3	13.2	17.1	5.0	5.6	4.6	3.6	6.2	4.1	**3.8**	91	65	64	NNE 4	NE 4	NE 4	10●	9	10	0.7	◍ n bis 8^{15} a.
28	22.6	22.3	19.5	**1.7**	4.2	4.4	4.6	**3.8**	3.9	5.7	61	62	90	S 3	SSW 4	SSW 6	10	8	6	0.0	
29	09.2	02.5	99.2	2.7	4.4	6.8	6.6	5.8	5.5	6.2	93	74	86	SSW 8	SSW 8	SSW 9	10	1	10●		◍ von 5^{45} p an.
30	99.7	03.6	05.4	4.4	7.0	8.4	6.2	6.4	5.6	6.0	85	67	86	W 2	NW 2	S 4	10	4	4	0.1	◍ n.
M.	06.6	07.2	07.1	5.4	7.2	8.0	7.1	6.8	6.5	6.5	88	80	86	2.5	2.7	3.1	8.9	7.8	8.8	35.9	

Oktober.

Datum.	8	2	7	Min.	8	2	7	8	2	7	8	2	7	8	2	7	8	2	7	Niederschl.	Bemerkungen.
1	98.1	93.0	88.8	6.0	6.4	**7.6**	6.4	6.1	**6.3**	**6.3**	86	80	88	SSW 6	SW 6	SSW 5	10	9	5		
2	83.3	85.6	88.5	3.8	4.4	6.8	4.2	5.4	5.0	5.0	87	68	80	SW 2	WSW 3	W 3	9	10	10		
3	83.5	81.8	81.3	0.2	3.0	3.8	1.0	4.1	5.2	4.6	72	87	92	SW 3	SSW 3	WSW 1	10	8	0		
4	85.7	90.5	90.4	-0.8	3.0	3.6	1.0	4.7	4.3	3.8	83	73	77	WNW 2	NW 3	SW 2	10	7	0		
5	92.8	93.5	94.2	0.0	2.0	3.0	0.6	4.0	3.8	3.5	75	66	72	S 3	SSW 3	S 3	10	0	0		
6	92.2	92.9	93.3	-1.2	1.0	2.4	3.2	4.4	5.1	4.4	89	93	76	0	N 2	NNE 2	1	10●*	6		◍ ✶ a, p bis 3^{45} p.
7	93.0	94.6	95.5	0.6	2.6	2.8	3.2	4.4	4.5	4.2	79	79	73	N 5	NNW 4	N 5	10✶	10	4	3.2	✶ n, ✶ sch. a bis 12^{45} p, ◍ ✶ sch. 1^{50}-
8	98.1	99.7	98.9	-0.8	3.0	3.2	-1.0	4.0	3.1	3.5	69	53	82	N 5	NW 4	W 3	10✶	5	1	3.3	◍ ✶ sch. n, a, p. [4^{50} p.
9	80.5	74.7	70.6	-3.2	1.4	0.8	1.4	4.7	4.1	4.0	92	85	78	SSW 6	SW 4	SW 4	10	10✶	10	1.4	✶ 9^{45} a - 3^{30} p.
10	69.3	67.5	**66.0**	-2.4	-1.6	0.0	1.6	3.7	4.2	4.4	90	91	85	WSW 3	SSW 4	S 4	2	1	10●*	1.1	◍ ✶ von 3^{45} p an.
11	73.8	79.0	81.8	-2.0	2.8	3.2	2.8	4.5	4.4	5.0	79	76	89	N 5	N 4	NNW 7	10●*	10●*	10●*	3.2	◍ ✶ n, a, p.
12	88.5	92.0	94.4	1.4	2.6	1.4	0.8	4.8	4.3	4.7	86	85	96	NNW 3	NW 3	0	9	10✶	10✶	8.7	◍ ✶ n, ✶ von 10^{20} a an, p.
13	01.2	04.1	06.1	0.0	1.8	2.2	1.2	4.5	4.6	4.5	85	86	89	S 1	SE 2	SSE 1	10	10✶	10✶	9.5	✶ n, ✶ sch. von 11^{45} a an, p.
14	07.1	07.9	07.3	0.4	1.4	1.2	0.2	4.0	4.7	4.3	78	92	92	SW 1	SW 1	ENE 1	9	8	10✶	0.1	✶ sch. 9^{40} a - 12^{45} p, p von 2^{20} p.
15	06.5	06.0	04.1	-2.6	-0.6	2.0	1.2	4.0	4.0	4.7	91	75	92	NW 1	NE 2	NE 3	10✶	10✶	10✶	3.3	✶ n, ✶ sch. a, p.
16	98.7	97.4	96.6	-2.0	2.6	2.4	2.6	5.1	5.1	4.2	93	93	75	ENE 5	NE 5	NNE 5	10●*	10●*	3	7.5	✶ n, ◍ ✶ a, ✶ sch. bis 5^{40} p.
17	95.3	95.3	96.6	-0.2	1.8	2.0	1.4	4.9	4.0	4.7	93	75	92	N 5	N 6	NNW 7	10	10●*	10●*	4.1	✶ n, ◍ ✶ von 12^{30} p an, p.
18	01.0	02.9	04.3	-0.1	1.9	1.6	1.4	5.2	4.4	3.8	98	85	74	NNE 4	N 4	N 4	10	8	5	1.7	◍ ✶ n, ✶ sch. 8^{30} a - 13^{10} p u. 4^{40} - 5^{45} p.
19	03.9	03.1	02.2	-0.4	1.2	1.6	-0.4	4.3	3.5	4.1	85	67	91	N 5	N 4	NW 2	8	7	10	3.2	✶ sch. n.
20	96.5	95.7	95.8	-4.2	-3.4	-4.2	-4.4	2.8	2.6	2.5	78	76	76	SW 4	SW 3	SSW 4	0	2	0		
21	98.5	02.8	05.7	**-5.8**	1.4	1.4	1.4	3.8	4.3	3.8	74	85	74	N 3	N 2	N 3	3	9	4		
22	08.3	07.4	05.1	-1.6	-1.4	-3.0	-4.0	3.6	2.6	3.0	85	69	87	W 3	WSW 4	SW 3	6	10	0		
23	05.9	07.4	06.2	-4.8	-1.2	-2.2	-1.4	3.6	3.1	3.6	86	80	85	SSW 3	WSW 3	SW 4	9	10	6	0.2	✶ n.
24	01.3	99.8	00.4	-5.2	-0.2	0.2	0.6	3.9	3.8	4.0	85	82	82	S 5	WSW 4	SW 4	10	10	10		✶ a, p.
25	98.6	96.4	98.4	-0.8	2.3	2.7	2.5	4.5	4.6	4.5	82	82	82	SW 4	SW 6	SW 3	10	10	10	0.4	◍ n bis 10 a.
26	00.4	04.3	06.7	2.1	3.3	4.4	3.6	3.5	5.8	5.3	60	93	90	WSW 2	WSW 2	NE 4	10	10	10●	0.0	◍ n, a, 5-6 p.
27	12.7	16.2	18.4	1.2	1.5	1.4	0.6	2.6	3.2	3.8	50	63	78	NE 4	NE 3	NE 3	10	10✶	10✶	0.1	✶ n, a, p.
28	19.0	16.4	13.4	-1.1	0.2	0.2	0.1	2.1	2.1	**1.9**	46	45	43	NE 3	ENE 2	ENE 2	10	9✶	7	0.0	✶ n, a.
29	08.5	08.8	09.0	-1.5	0.0	-0.2	-0.4	2.0	3.5	2.8	44	78	63	NE 5	NE 5	NE 4	10	6✶	3	0.1	✶ n, a, p.
30	09.1	13.3	15.6	-2.9	-2.2	-1.5	-0.4	3.2	3.4	3.8	82	82	85	N 4	NW 3	NNE 0	10✶	4	3	3.5	✶ n, a, p.
31	16.9	21.4	**26.4**	-2.6	-1.2	-1.0	-2.2	4.1	2.8	3.2	98	66	83	N 6	NE 5	NE 6	10✶	8	10✶	1.0	✶ n, a, p.
M.	~~97.8~~ ~~97.7~~	~~98.6~~ ~~98.4~~	~~98.9~~ ~~98.8~~	-1.0	1.3	1.6	0.9	4.1	4.1	4.1	80	78	81	3.6	3.5	3.3	8.6	8.1	6.4	55.6	

Corrections from Berlin 1932

$H = 6\,m$, $H_b = 6.8\,m$ — $\varphi = 70^0\ 22'$ N

$C_g = 2.05$ mb bei 990 mb — $\lambda = 31^0\ 8'$ E

November.

Datum.	Luftdruck. 900 oder 1000 + 8	2	7	Luft-Temperatur. Min.	8	2	7	Absolute Feuchtigkeit. 8	2	7	Relative Feuchtigk. 8	2	7	Richtung und Stärke des Windes. 8	2	7	Bewölkung. 8	2	7	Niederschl.	Bemerkungen.
1	32.2	**33.0**	32.3	-2.9	-0.1	0.5	0.9	3.4	3.8	4.0	76	81	80	N 3	NNE 4	NNE 4	10*	10*	10	1.2	✱ n, a.
2	24.0	19.3	15.5	-1.5	-0.5	0.6	0.6	4.1	4.5	4.4	94	94	92	NW 4	WNW 3	NW 4	10*	10*	8	1.1	✱ n, a, p.
3	09.7	08.7	07.0	-0.6	1.4	0.9	-0.4	4.8	4.7	4.0	94	96	90	N 4	N 4	WNW 3	10	10*	5	8.0	✱ n, a, p.
4	99.8	96.4	94.6	-5.7	-5.2	-4.5	-2.3	2.8	3.1	3.6	90	94	94	WSW 5	SW 2	SW 0	3	10	6	3.4	
5	91.8	92.7	93.7	-7.0	0.6	1.1	1.0	4.6	4.6	3.8	96	92	78	N 3	NE 3	NE 5	10*	10*	10*	4.0	✱ n, a, p.
6	97.3	99.5	99.4	-2.9	-2.4	-0.8	-3.1	3.7	3.9	3.6	96	92	97	NE 4	NE 4	NE 5	10*	6	10*	3.5	✱ n, a, p.
7	98.1	96.6	95.2	-4.7	-3.2	-4.4	-4.5	3.6	3.1	3.0	98	94	92	NW 3	NNW 3	NW 4	10*	10*	10*	4.0	✱ n, a, p.
8	95.2	96.0	96.3	-7.0	-6.0	-6.0	-6.0	2.3	2.2	2.4	80	76	81	W 4	NW 3	WNW 4	10	2	0	5.0	✱ n.
9	98.9	02.5	05.4	-6.6	-5.6	-4.8	-2.8	2.9	2.9	3.3	96	90	90	W 3	W 3	W 4	2	2	3		⌸² abd.
10	05.5	08.7	08.3	-7.6	-5.0	-7.6	-7.6	2.6	2.2	2.4	83	84	92	SW 7	SW 4	SW 5	5	3	4	2.0	✱ n.
11	06.0	06.2	04.3	10.5	-9.4	-5.3	-6.0	2.0	2.8	2.6	91	90	88	WSW 5	SW 4	WSW 5	1	3	2		
12	97.8	99.5	98.9	-11.4	-2.8	-2.2	-2.2	3.3	3.1	3.5	88	81	89	W 3	W 2	W 2	7	10	10*		✱ 8^{30}-10 a u. von 5^{30} p an.
13	06.4	07.5	05.9	-3.9	-2.1	-0.5	**2.8**	3.5	3.3	5.1	89	97	92	N 0	SW 3	WNW 4	6	10*	10•*	2.4	✱ n, a, p.
14	10.7	10.0	07.6	-4.1	1.8	1.9	1.6	4.8	4.8	4.9	92	92	94	SW 2	W 2	SW 0	8	10	8	11.8	✱ n.
15	04.0	03.8	06.5	-0.2	**2.8**	1.1	1.0	**5.3**	4.7	4.6	94	94	92	WNW 0	WSW 5	W 3	5	6	3		⌸² abd.
16	13.5	15.6	15.0	0.2	1.2	0.4	1.6	4.7	4.5	4.9	94	94	94	NW 0	W 0	SW 0	9	5	10	1.0	◎ n.
17	11.8	11.5	13.0	-0.4	-0.2	-2.3	-0.6	4.2	3.5	4.1	94	90	94	SW 0	SW 3	WSW 0	10	10	10		
18	11.1	99.0	89.6	-3.8	-2.8	-2.2	0.2	3.6	3.7	4.4	97	94	94	WSW 3	SW 7	WSW 6	10	10*	10*		✱ a, p.
19	**82.2**	83.5	84.5	-2.8	**2.8**	0.4	1.0	4.9	4.6	4.5	88	97	91	NW 6	N 0	NE 0	7	10*	10*	1.0	◎ ✱ a, p.
20	90.3	93.5	95.2	-4.5	-3.0	-4.0	-4.8	3.4	3.1	3.2	92	91	00	NNE 0	N 0	ENE 2	10	8*	10*	8.0	✱ n, a, p.
21	94.7	94.0	94.5	-5.6	-5.1	-6.0	-5.2	2.9	2.7	2.9	91	92	94	NNE 3	N 2	N 2	7	10*	6	1.6	✱ n, a, p.
22	95.0	96.0	94.9	6.0	-4.6	-3.0	-3.6	3.0	3.4	3.3	92	92	92	NNE 0	N 0	NW 1	10*	10	10	4.4	✱ n, a.
23	90.9	91.6	91.5	-4.8	-1.8	-2.8	-3.8	3.7	3.5	3.2	92	94	92	E 0	NW 3	NNW 5	10*	10*	8*	4.4	✱ n, a, p.
24	90.2	91.0	94.1	-5.5	-4.0	-5.8	-6.2	3.2	2.8	2.7	92	94	94	W 5	SW 5	W 3	8	7	3	3.1	
25	98.5	01.2	01.5	-7.7	-5.2	-2.1	-2.6	2.8	3.3	3.4	92	82	89	W 2	S 3	S 4	6	8	2		✱ a.
26	02.2	02.7	03.1	-6.6	-5.6	-3.2	-10.8	2.7	3.4	1.9	91	94	94	W 5	SW 5	W 6	4	5	3	6.0	
27	08.0	12.3	14.9	**-12.6**	-10.6	-9.8	-9.5	2.0	2.0	2.0	96	91	89	W 6	WSW 5	WSW 5	4	2	1		
28	17.0	17.9	16.8	-10.6	-7.8	-9.2	-7.8	2.3	**1.6**	2.3	90	78	89	W 5	W 3	W 3	1	1	1		
29	07.4	06.0	06.4	-11.4	-3.4	-2.2	-3.3	3.3	3.7	3.4	94	94	94	N 3	E 4	E 4	10*	7*	6	0.5	✱ n, a.
30	02.3	00.9	00.9	-7.2	-6.2	-4.2	-4.0	2.7	3.2	3.2	94	94	94	W 3	E 3	ENE 3	3	10*	10	0.5	✱ a, p.
M.	02.9 ~~03.1~~	03.0 ~~03.2~~	02.6 ~~02.9~~	-5.5	-3.1	-2.9	-2.9	3.4	3.4	3.5	92	91	91	3.0	3.1	3.2	7.2	7.5	6.6	76.9	

December.

Datum.	8	2	7	Min.	8	2	7	8	2	7	8	2	7	8	2	7	8	2	7	Niederschl.	Bemerkungen.
1	98.7	98.9	99.2	-8.4	-5.8	-5.4	-5.6	2.8	2.5	2.7	92	82	91	NE 3	NNE 4	NE 3	7*	10*	10*	2.6	✱ n, a, p.
2	02.5	05.2	09.0	-6.8	-5.3	-4.6	-6.6	3.0	3.1	2.6	96	94	92	NW 2	NE 4	NE 4	10*	10*	5	6.1	✱ n, a, p.
3	14.1	14.7	10.4	-8.7	-7.2	-8.3	-9.5	2.5	2.3	2.1	94	94	94	NW 4	WSW 4	SW 5	10*	4	10	3.3	✱ n, a.
4	90.0	85.8	80.8	-9.5	-7.5	-4.8	-3.7	2.5	3.0	3.3	96	94	96	WSW 7	WSW 6	WSW 6	4	10	6	8.1	✱ n.
5	84.2	90.9	93.9	-8.1	-0.6	1.4	-1.6	4.1	4.2	3.3	94	81	81	NNW 5	NE 4	NW 6	8*	10*	10*	8.2	✱ n, a, p.
6	93.4	93.6	95.2	-9.5	-3.5	-5.0	-4.2	2.9	2.6	2.8	82	82	82	NNW 3	W 4	WSW 5	6*	8	10	24.3	✱ n, a.
7	00.2	02.0	00.5	-5.4	-1.4	-2.4	-3.0	3.4	3.2	3.0	81	82	81	NW 4	WSW 5	WSW 5	10*	10*	3	2.2	✱ n, a, p.
8	94.7	95.3	96.2	-4.3	0.2	1.5	**2.9**	4.4	**4.9**	4.7	94	96	84	WSW 4	WSW 6	WSW 5	10•*	10•	10•	3.1	◎ ✱ n, ◎ a, p.
9	98.9	99.0	98.4	-0.6	1.4	1.3	0.9	4.6	4.8	4.5	91	94	91	WSW 5	WSW 5	SW 5	10•	10•	10•	1.6	◎ n, a, p.
10	96.7	95.7	97.5	-0.9	-0.6	-1.6	-2.2	4.1	3.2	3.4	94	80	87	W 6	WSW 5	WSW 4	10	9*	10	1.0	✱ n, a.
11	06.7	08.2	07.4	-6.7	-6.2	-6.5	-5.5	2.7	2.3	2.9	92	81	94	NE 6	NE 5	NE 5	10*	10*	10*	2.4	✱ n, a, p.
12	05.4	07.3	08.6	-7.1	-3.6	-4.1	-4.0	3.2	2.7	2.2	91	80	65	ENE 6	E 5	E 5	10*	10*	10*	1.3	✱ n, a, p.
13	12.6	14.2	15.2	-6.0	-5.0	-7.5	-6.8	2.2	2.2	2.1	69	81	75	E 5	ENE 5	E 4	9*	10*	5	3.4	✱ n, a, p.
14	15.7	15.9	15.9	-9.5	-7.0	-5.6	-5.8	2.1	1.8	1.7	76	58	58	ENE 4	ENE 4	NE 4	10*	8	4	3.5	✱ n, a, p.
15	16.3	**16.4**	13.9	-7.8	-6.8	-7.5	-8.2	1.7	1.6	1.5	60	60	61	N 4	WNW 4	W 5	6*	8*	6	2.6	✱ n, a.
16	10.5	10.4	10.0	-12.2	-12.2	-14.3	**-14.8**	1.1	**0.9**	**0.9**	61	61	61	W 6	W 4	W 3	2	3	2	0.5	
17	04.6	04.5	03.4	**-14.8**	-10.6	-6.4	-6.7	1.3	1.7	1.8	61	61	62	NW 3	SE 3	SE 3	10*	8*	10*	1.4	✱ n, a, p.
18	01.5	99.8	96.9	-10.6	-7.6	-7.7	-6.1	1.6	1.6	1.9	62	64	64	SE 1	W 2	SW 3	10*	10*	8*	2.6	✱ n, a, p.
19	91.0	87.3	87.2	-8.8	-5.8	-6.8	-7.8	2.0	2.0	1.9	67	73	76	ESE 4	W 3	S 3	10*	10*	10	10.2	✱ n, a, p.
20	94.7	99.1	00.3	-10.2	-9.2	-7.0	-5.6	1.8	2.0	2.3	80	75	76	WNW 2	SW 2	W 4	5	10	10*	3.5	✱ a, p.
21	05.7	08.3	08.5	-9.3	-5.3	-6.0	-8.8	2.2	2.7	1.9	73	94	80	E 2	NNW 3	NW 4	7	10*	4	3.7	✱ n, a, p.
22	09.7	11.6	12.0	-9.5	-8.0	-10.4	-10.5	1.9	1.7	1.7	75	80	80	NW 4	W 4	W 4	1	3	1	0.6	
23	06.3	03.5	02.6	-12.0	-7.0	-7.5	-6.1	2.8	2.3	2.7	00	87	94	SW 6	SW 5	SW 5	10*	10	10*	2.0	✱ n, a, p.
24	00.5	00.3	99.0	-8.7	-6.2	-3.8	-2.6	2.6	3.2	3.5	90	92	91	SW 5	SW 4	SSW 3	8	10	10	2.7	✱ n.
25	94.5	93.6	92.5	-6.5	-3.5	-2.2	-1.0	3.2	3.9	4.0	91	98	94	W 2	WNW 3	ENE 2	10	10*	10*		✱ a, p.
26	87.0	88.6	89.8	-3.7	-0.2	-0.6	-1.0	4.5	3.9	3.4	00	90	80	ENE 5	E 5	ENE 5	10*	10*	10*	1.1	✱ n, a, p.
27	95.2	97.8	98.1	-3.6	-2.6	-4.8	-5.6	3.1	2.7	2.5	83	83	82	SE 0	SW 3	WSW 4	10	8	4	7.4	✱ n.
28	01.1	02.0	01.9	-10.1	-7.0	-5.0	-3.0	2.5	3.1	3.4	91	97	92	W 4	WSW 2	SW 4	4	8	10		
29	98.4	96.9	94.4	-7.2	-3.2	-4.0	-4.2	3.3	3.1	3.1	91	91	91	SW 6	SW 7	SW 7	9*	10	10	0.5	✱ n, a.
30	89.2	87.9	85.4	-5.0	-5.0	-5.4	-7.6	2.9	2.8	2.4	92	92	92	SW 7	SW 6	SW 5	9	10	2	0.1	
31	78.1	77.0	**76.8**	-9.1	-4.6	-3.5	-3.4	3.0	3.2	3.1	92	91	89	S 4	S 3	S 3	10	10	10		
M.	96.6 ~~99.9~~	00.2 ~~00.4~~	99.8 ~~00.0~~	-7.8	-5.1	-5.0	-5.1	2.8	2.8	2.7	84	83	82	4.2	4.2	4.3	8.2	8.9	7.7	110.0	

MONATS- UND JAHRES-RESUMÉ

FÜR DAS JAHR 1925.

Kongens Grube.

$\lambda = 11^0\ 18'$ E $= 45^m\ 12^s$ $\varphi = 62^0\ 40'$ N

Monat.	Luftdruck. Normalschwere Mittel.	Luft-Temperatur. Min.	I	II	III	Mittel.	beobachtetes Max.	Dat.	Min.	Dat.	Absolute Feuchtigkeit. I	II	III	Mittel.	Relat. Feuchtigk. I	II	III	Mittel.	Monat.
Januar		-8.9	-5.9	-4.7	-5.4	-5.4	2.3	16	-17.6	23									Januar
Februar . . .		-10.2	-7.3	-5.7	-6.6	-6.7	0.7	12	-18.1	20									Februar
März		-13.3	-9.8	-6.8	-8.4	-8.8	3.1	18	-25.3	15									März
April		-6.2	-2.6	1.0	-0.9	-1.9	6.6	11	-14.8	2									April
Mai		-0.3	3.3	6.0	4.8	3.3	16.1	18	-8.3	2									Mai
Juni		2.8	7.0	10.3	8.5	7.0	20.5	30	-0.4	18									Juni
Juli		9.8	13.7	16.8	13.8	13.4	25.9	23	2.4	11									Juli
August		6.1	8.8	11.9	9.6	9.1	18.1	9	1.4	15									August
September . .		2.2	4.5	7.3	5.2	5.0	12.4	16	-1.5	14									September
Oktober . . .		-5.4	-2.7	-0.9	-2.7	-2.5	7.0	1	-16.0	18									Oktober
November . .		-11.1	-8.3	-6.9	-7.5	-7.8	2.6	19	-19.4	9									November
December . .		-14.3	-10.2	-9.4	-9.8	-9.9	-0.8	30	-26.0	16									December
Jahr		-4.1	-0.8	1.6	0.0	-0.4	25.9		-26.0										Jahr

Røros.

$\lambda = 11^0\ 23'$ E $= 45^m\ 32^s$ $\varphi = 62^0\ 34'$ N $C_g = 1.25$ mb bei 940 mb

Monat.	Luftdruck. Normalschwere Mittel.	Min.	I	II	III	Mittel.	Max.	Dat.	Min.	Dat.	I	II	III	Mittel.	I	II	III	Mittel.	Monat.
Januar	932.5	-12.4	-7.6	-5.5	-6.9	-6.9	4.7	16	-24.4	22	2.7	2.8	2.7	2.7	90	85	86	88	Januar
Februar . . .	24.4	-11.4	-7.2	-4.2	-5.8	-6.1	2.4	12	-26.7	21	2.6	3.0	2.7	2.8	86	80	82	84	Februar
März	34.5	-17.5	-12.5	-5.4	-7.8	-9.5	3.1	18	-33.9	15	1.9	2.4	2.3	2.2	82	72	77	79	März
April	34.0	-8.3	-4.3	3.4	1.7	-1.5	6.6	11	-19.0	2	2.9	3.8	3.6	3.3	82	64	67	74	April
Mai	38.3	0.1	4.7	9.0	8.0	5.1	19.3	18	-7.4	2	5.0	5.4	5.4	5.2	77	62	65	74	Mai
Juni	38.7	3.6	8.4	12.5	11.3	8.7	22.5	30	-1.4	28	6.2	6.3	6.0	6.1	75	59	60	71	Juni
Juli	40.8	9.2	14.3	19.3	17.3	14.8	26.1	22	4.5	11	9.3	9.4	8.7	9.0	77	57	60	73	Juli
August	35.7	7.4	10.2	13.4	12.2	10.7	19.5	9	0.5	17	7.8	8.0	7.6	7.7	84	70	72	78	August
September .	31.8	1.7	4.5	9.3	6.9	5.9	14.5	16	-5.8	12	5.5	6.3	5.9	5.8	86	71	79	81	September
Oktober . . .	31.1	-6.0	-3.2	1.0	-2.0	-2.0	8.6	3	-25.9	19	3.3	4.1	3.5	3.6	86	80	82	83	Oktober
November . .	34.1	-11.7	-8.6	-7.4	-8.8	-8.5	5.7	19	-33.2	30	2.4	2.6	2.4	2.5	87	84	87	87	November
December . .	23.0	-19.4	-12.7	-11.6	-12.5	-12.5	0.5	4	-38.0	16	2.0	2.1	2.0	2.0	90	89	88	89	December
Jahr	933.2	-5.4	-1.2	2.8	1.1	-0.2	26.1		-38.0		4.3	4.7	4.4	4.4	84	73	75	80	Jahr

Tønset.

$\lambda = 10^0\ 45'$ E $= 43^m\ 0^s$ $\varphi = 62^0\ 17'$ N

Monat.	Luftdruck. Normalschwere Mittel.	Min.	I	II	III	Mittel.	Max.	Dat.	Min.	Dat.	I	II	III	Mittel.	I	II	III	Mittel.	Monat.
Januar		-13.4	-8.6	-4.8	-7.9	-7.4	6.0	16	-23.2	5	2.5	2.8	2.5	2.6	88	81	85	86	Januar
Februar . . .		-12.8	-8.5	-2.7	-5.4	-6.1	4.0	15	-26.4	21	2.3	2.8	2.6	2.6	83	69	76	78	Februar
März		-17.4	-12.1	-2.0	-5.9	-8.0	6.0	18	-32.3	9	1.9	2.4	2.1	2.1	79	55	64	70	März
April		-6.9	-2.3	6.3	3.3	0.4	13.0	11	-16.8	2	2.6	3.2	2.7	2.7	61	43	46	54	April
Mai		0.3	5.5	11.3	8.2	6.0	21.0	17	-7.2	2	3.9	4.6	4.8	4.3	56	47	58	60	Mai
Juni		3.2	9.7	15.8	12.4	10.0	27.0	30	-1.9	5	5.0	5.1	4.8	4.9	54	39	45	53	Juni
Juli		8.7	14.4	21.0	17.6	15.2	27.9	22	4.3	11	7.9	8.3	8.4	8.1	64	46	57	64	Juli
August		7.0	10.9	15.2	12.5	11.3	20.4	7	-0.7	17	7.2	7.4	7.6	7.3	74	58	71	74	August
September . .		1.6	4.7	10.9	7.6	6.4	16.2	16	-4.3	12	5.6	5.8	6.1	5.7	85	60	78	79	September
Oktober . . .		-6.5	-2.4	3.4	0.4	-0.5	11.6	9	-23.3	18	3.4	3.8	3.7	3.6	82	64	76	76	Oktober
November . .		-14.5	-10.6	-7.5	-9.6	-9.5	5.0	19	-30.5	30	2.1	2.4	2.2	2.2	83	79	83	83	November
December . .		-23.2	-16.8	-14.0	-14.6	-15.3	1.3	6	-41.0	16	1.5	1.7	1.7	1.6	85	84	84	84	December
Jahr		-6.2	-1.3	4.4	1.6	0.2	27.9		-41.0		3.8	4.2	4.1	4.0	74	60	69	72	Jahr

Strand.

$\lambda = 10^0\ 49'$ E $= 43^m\ 16^s$ $\varphi = 62^0\ 1'$ N

Monat.	Luftdruck. Normalschwere Mittel.	Min.	I	II	III	Mittel.	Max.	Dat.	Min.	Dat.	I	II	III	Mittel.	I	II	III	Mittel.	Monat.
Januar		-10.8	-6.7	-4.7	-6.1	-6.1	7.1	16	-18.8	22	2.6	2.7	2.7	2.7	82	79	80	81	Januar
Februar. . . .		-10.5	-7.1	-2.6	-4.5	-5.2	4.7	5	-25.2	21	2.6	3.1	2.9	2.9	84	76	81	82	Februar
März		-14.3	-9.5	-1.8	-5.4	-6.7	6.7	18	-30.0	9	2.2	2.6	2.2	2.2	82	59	67	72	März
April		-5.2	-0.8	6.4	4.0	1.3	11.2	11	-14.7	2	3.7	3.9	3.4	3.6	79	51	55	68	April
Mai		1.1	6.2	10.4	9.3	6.4	20.3	19	-5.0	2	5.6	5.7	5.6	5.5	77	60	62	73	Mai
Juni.		4.6	11.3	15.9	14.2	11.2	26.4	10	-0.6	5	6.8	6.2	6.0	6.2	68	47	50	64	Juni
Juli		10.2	15.8	21.0	18.7	16.2	28.8	22	4.7	11	10.2	9.1	8.7	9.2	77	51	55	71	Juli
August		8.5	11.8	15.7	13.6	12.3	21.3	8	0.8	17	8.4	8.2	7.7	8.0	83	63	67	76	August
September . .		2.7	5.4	11.1	7.6	6.9	15.6	16	-2.8	12	6.1	6.4	6.1	6.1	88	64	77	80	September
Oktober . . .		-4.3	-1.3	3.4	0.6	0.2	11.9	2	-18.5	19	3.7	4.0	3.6	3.8	82	66	73	76	Oktober
November . .		-11.9	-9.1	-7.0	-8.6	-8.4	6.4	19	-28.8	30	2.3	2.5	2.3	2.4	86	80	83	84	November
December . .		-19.9	-14.3	-12.7	-13.6	-13.8	1.4	6	-35.1	16	1.8	1.9	1.8	1.8	86	84	84	85	December
Jahr		-4.2	0.1	4.6	2.5	1.2	28.8		-35.1		4.7	4.7	4.4	4.5	81	65	70	76	Jahr

1925.

Kongens Grube.

H = 856 m h_t = 2.0 m h_r = 1.0 m

Monat.	Bewölkung. I	II	III	Mittel.	Niederschlag. Summe.	Zahl der Tage mit Niederschlag.	≥0.1 mm.	≥1.0 mm.	Schnee, ≥0.1 mm.	Hagel.	Nebel.	Heiter.	Trübe.	Gewitter.	Sturm.	Vindverteilung. N	NE	E	SE	S	SW	W	NW	C	Windstärke. Mittel.	Monat.
Januar . . .	7.2	7.4	8.0	7.5	27.1	13	10	8	10	0	2	3	16	0	0	6	0	0	0	39	11	9	16	12	1.9	Januar
Februar . .	9.1	7.9	9.4	8.8	24.3	13	13	9	13	0	1	0	19	0	0	7	0	0	9	48	5	2	10	3	2.6	Februar
März	7.3	6.5	6.9	6.9	32.1	14	14	9	14	0	1	3	17	0	0	16	0	0	0	24	8	1	26	18	2.3	März
April	6.0	6.3	5.8	6.0	11.3	5	5	3	5	0	0	5	12	0	0	6	0	0	0	38	1	8	14	23	1.6	April
Mai	5.7	7.1	7.4	6.7	38.5	9	9	5	6	0	0	3	14	0	0	11	0	0	0	49	2	1	6	24	1.8	Mai
Juni	7.7	7.0	7.4	7.4	33.9	8	7	7	2	1	1	3	15	0	0	16	2	0	4	12	0	0	45	11	2.4	Juni
Juli.	5.5	6.5	7.5	6.5	52.4	14	14	11	0	0	1	3	11	0	0	5	1	1	6	35	3	1	18	23	1.6	Juli
August. . .	9.0	7.8	7.5	8.1	66.7	16	14	12	0	0	0	1	18	0	0	0	1	0	6	40	3	3	36	4	2.2	August
September.	8.6	7.6	8.1	8.1	86.4	16	16	14	0	0	1	0	16	0	0	8	0	0	0	35	1	3	14	29	1.7	September
Oktober . .	8.5	8.0	8.4	8.3	39.9	18	17	15	14	0	1	1	21	0	0	6	0	0	0	30	2	5	35	15	2.4	Oktober
November .	8.4	7.3	8.4	8.0	45.0	16	16	11	16	0	0	0	20	0	0	2	0	0	3	26	3	3	33	20	2.4	November
December .	8.6	8.1	8.9	8.5	33.9	11	11	10	11	0	4	1	22	0	0	16	0	0	0	37	4	3	17	16	2.0	December
Jahr	7.6	7.3	7.8	7.6	491.5	153	146	114	91	1	12	23	201	0	0	99	4	1	28	413	43	39	270	198	2.1	Jahr

Røros.

H = 627 m, H_b = 629.7 m h_t = 1.6 m h_r = 1.8 m

Januar . . .	7.4	7.9	6.0	7.1	47.9	17	16	10	15	0	2	2	13	0	0	10	4	4	6	14	10	4	14	27	1.2	Januar
Februar . .	8.4	8.1	7.6	8.0	33.6	23	16	10	16	0	2	0	16	0	1	7	1	3	19	18	9	3	5	19	1.6	Februar
März	7.0	6.7	7.8	7.2	44.2	23	21	10	21	0	2	2	15	0	0	20	1	2	8	8	10	14	14	16	1.4	März
April	6.8	7.0	6.4	6.7	10.8	14	12	3	12	0	2	5	13	0	0	19	4	5	10	11	8	5	5	23	1.2	April
Mai	6.3	7.4	7.5	7.1	26.7	21	18	7	8	2	0	1	12	0	0	14	1	3	24	18	12	2	4	15	1.7	Mai
Juni	7.7	7.7	7.4	7.6	24.6	18	12	5	3	1	0	0	16	0	0	41	6	3	9	3	6	2	15	5	2.1	Juni
Juli.	6.4	7.6	7.3	7.1	60.9	25	19	13	0	0	0	1	10	3	0	18	3	8	18	9	9	2	8	18	1.4	Juli
August. . .	7.7	7.7	7.6	7.7	73.9	22	20	14	0	0	0	1	13	0	0	32	0	1	21	16	8	2	7	6	1.7	August
September.	9.2	8.0	8.1	8.4	42.0	27	23	14	0	0	4	0	16	0	0	18	6	6	20	8	11	3	3	15	1.6	September
Oktober . .	8.4	8.3	7.3	8.0	37.2	24	19	14	16	0	2	1	19	0	0	20	1	2	17	6	10	7	12	18	1.6	Oktober
November .	8.7	7.8	7.4	8.0	39.9	23	20	11	20	0	4	1	16	0	0	12	1	3	14	8	7	6	13	26	1.1	November
December .	7.4	8.0	7.5	7.6	48.5	26	22	13	22	0	6	2	16	0	0	13	2	0	13	3	3	6	10	43	1.0	December
Jahr	7.6	7.7	7.3	7.5	490.2	263	218	124	133	3	24	16	175	3	1	224	30	40	179	122	103	56	110	231	1.5	Jahr

Tønset.

H = 486 m h_t = 1.6 m h_r = 1.4 m

Januar . . .	7.8	4.8	5.2	5.9	27.3	11	11	9	8	0	2	3	7	0	0	0	0	1	7	8	7	5	7	58	1.3	Januar
Februar . .	7.3	5.6	4.7	5.9	17.3	16	16	6	16	0	0	2	8	0	0	0	1	21	12	3	2	2	2	41	1.9	Februar
März	6.8	4.2	4.9	5.3	10.2	11	11	4	11	0	0	6	6	0	0	5	2	10	4	8	4	7	14	39	1.8	März
April	5.9	4.9	4.7	5.2	7.1	5	5	3	2	0	0	0	9	0	0	0	2	11	7	16	7	4	3	40	1.8	April
Mai	5.4	6.3	6.2	6.0	39.4	12	10	10	3	0	0	5	9	0	0	4	0	16	11	21	0	0	3	38	2.1	Mai
Juni	6.1	6.1	5.9	6.0	23.1	12	9	6	0	0	0	2	4	1	0	8	4	4	1	3	3	10	24	33	2.4	Juni
Juli.	5.5	6.6	7.4	6.5	70.7	15	15	11	0	0	2	1	7	8	0	0	1	8	3	15	2	8	5	51	1.2	Juli
August. . .	7.9	7.8	7.7	7.8	105.6	22	22	19	0	0	3	0	13	2	0	4	0	12	10	13	1	7	1	45	1.6	August
September.	9.0	7.5	7.8	8.1	80.8	21	21	17	0	0	6	0	16	0	0	0	3	7	7	9	2	5	1	56	1.2	September
Oktober . .	6.8	6.0	4.5	5.8	14.7	12	12	5	6	0	0	1	7	0	1	4	0	4	7	15	4	7	9	43	1.8	Oktober
November .	7.9	6.2	5.4	6.5	39.0	16	16	10	15	0	0	2	13	0	0	2	2	2	2	7	1	5	3	66	0.7	November
December .	7.6	6.9	6.3	6.9	33.1	13	12	10	12	0	0	4	13	0	0	0	1	3	3	2	2	4	3	75	0.7	December
Jahr	7.0	6.1	5.9	6.3	468.3	166	160	110	73	0	13	26	112	11	1	27	16	99	74	120	35	64	75	585	1.5	Jahr

Strand.

H = 475 m h_t = 1.3 m h_r = 1.5 m

Januar . . .	7.7	7.0	5.1	6.6	21.9	13	10	6	10	0	1	2	10	0	0	0	0	10	28	0	0	10	15	30	2.1	Januar
Februar . .	7.9	6.8	6.9	7.2	29.3	21	18	9	16	0	1	1	13	0	0	0	0	18	24	1	0	9	11	21	2.4	Februar
März	6.3	5.1	7.2	6.2	7.4	20	15	2	15	0	0	2	8	0	0	2	0	8	13	0	0	18	23	29	2.1	März
April	5.5	6.7	6.1	6.1	19.3	13	7	4	6	1	0	4	9	0	0	2	0	12	23	0	0	11	14	28	2.0	April
Mai	7.2	7.3	7.5	7.3	60.6	19	15	11	6	0	0	2	17	0	0	2	0	17	21	9	0	17	17	10	3.1	Mai
Juni	7.1	6.9	6.7	6.9	16.6	18	12	5	1	0	0	2	14	2	0	0	0	14	13	3	0	25	27	8	2.8	Juni
Juli.	6.4	7.2	7.0	6.9	70.0	19	13	10	0	0	0	1	11	8	0	2	0	21	17	8	0	12	15	18	2.2	Juli
August. . .	8.3	7.5	7.7	7.8	66.4	24	21	15	0	0	4	0	19	2	0	0	0	20	22	4	0	10	20	17	2.8	August
September.	8.3	7.9	7.6	7.9	61.9	22	18	13	0	0	6	0	16	0	0	1	0	14	16	4	0	12	19	24	2.3	September
Oktober . .	7.0	6.5	6.0	6.5	24.2	20	14	7	6	1	1	2	13	0	0	1	1	12	17	2	0	19	22	19	2.7	Oktober
November .	8.7	7.0	5.9	7.2	27.1	19	17	8	16	0	1	0	12	0	0	0	0	15	10	0	0	14	10	41	1.7	November
December .	6.3	7.0	6.5	6.6	43.4	16	15	7	15	0	3	5	13	0	0	3	0	6	14	3	0	15	9	43	1.5	December
Jahr	7.2	6.9	6.7	6.9	448.1	224	175	97	91	2	17	21	155	12	0	13	1	167	218	34	0	172	202	288	2.3	Jahr

1925.

Engerdalen.

$\lambda = 11^0\ 9'\ E = 44^m\ 36^s$ $\varphi = 61^0\ 40'\ N$

Monat.	Luftdruck. (Normalschwere.) Mittel.	Luft-Temperatur. Min.	I	II	III	Mittel.	beobachtetes Max.	Dat.	Min.	Dat.	Absolute Feuchtigkeit. I	II	III	Mittel.	Relat. Feuchtigk. I	II	III	Mittel	Monat.
Januar		-11.1	7.3	-4.0	-5.7	-6.0	6.3	11	-22.7	21	2.5	2.8	2.6	2.6	82	76	79	80	Januar
Februar . . .		-11.7	-8.1	-3.5	-5.6	-6.2	2.2	5	-27.6	20	2.3	2.7	2.5	2.5	80	70	76	76	Februar
März		-17.3	10.5	-4.1	-8.6	-8.8	4.3	18	-32.6	9	2.0	2.1	1.9	1.9	75	57	67	70	März
April		-7.2	-0.5	4.7	0.6	-0.3	10.6	11	-22.6	2	3.1	3.1	3.2	3.0	67	47	64	67	April
Mai		0.2	6.8	9.7	6.8	5.7	19.7	18	-6.8	2	4.8	5.1	4.8	4.8	65	55	65	68	Mai
Juni		3.1	11.1	14.8	12.4	10.1	24.7	10	-2.8	5	5.6	5.7	5.3	5.4	56	46	49	56	Juni
Juli		8.3	16.6	20.3	16.4	15.1	28.3	22	2.2	3	8.7	8.4	8.1	8.3	63	49	59	65	Juli
August		6.8	11.5	14.3	11.0	10.9	20.3	8	0.3	31	7.3	7.4	7.1	7.2	73	61	73	74	August
September . .		2.0	6.2	10.0	6.1	6.3	15.5	16	-3.9	14	5.4	5.7	5.6	5.5	75	61	78	75	September
Oktober . . .		-5.3	-1.9	2.1	-1.3	-1.1	12.0	1	-18.1	19	3.2	3.5	3.2	3.3	77	62	72	72	Oktober
November . .		-13.6	-9.8	-6.5	-9.7	-9.0	5.2	19	-29.6	30	2.1	2.3	2.0	2.1	79	72	79	78	November
December . .		-19.5	-13.0	-11.8	-13.6	-13.1	1.8	6	-35.5	16	1.8	1.8	1.6	1.7	79	74	76	77	December
Jahr		-5.4	0.1	3.8	0.7	0.3	28.3		-35.5		4.1	4.2	4.0	4.0	73	61	70	72	Jahr

Plassen.

$\lambda = 12^0\ 30'\ E = 50^m\ 0^s$ $\varphi = 61^0\ 8'\ N$

Januar		-12.7	-9.1	-4.9	-6.6	-7.2	4.4	16	-21.8	27	2.3	2.9	2.7	2.6	86	83	86	86	Januar
Februar . . .		-11.3	-7.7	-1.6	-3.9	-5.1	3.3	5	-24.0	21	2.5	3.3	3.0	2.9	83	75	81	81	Februar
März		-16.5	-11.3	-1.3	-6.0	-7.3	6.6	19	-31.1	15	2.0	2.7	2.4	2.3	82	61	72	75	März
April		-7.1	1.1	7.1	2.9	1.2	13.9	11	-21.9	2	3.5	4.0	3.9	3.7	67	52	68	68	April
Mai		0.5	7.6	11.5	9.5	7.2	21.2	19	-5.9	2	5.8	6.1	6.0	5.9	73	60	66	73	Mai
Juni		3.0	14.6	17.8	15.7	12.6	27.1	10	-2.0	4	7.4	6.7	6.4	6.7	59	45	49	58	Juni
Juli		8.2	18.4	22.3	19.2	16.7	30.0	22	1.2	3	10.7	10.3	10.2	10.3	68	53	62	69	Juli
August		6.3	13.2	16.3	13.6	12.5	22.9	8	-1.8	17	8.9	9.2	8.7	8.8	79	67	75	78	August
September . .		1.4	6.6	11.6	7.6	7.2	17.4	16	-3.2	14	6.2	6.8	6.6	6.4	85	67	83	81	September
Oktober . . .		-6.1	-2.1	4.6	0.1	0.0	14.9	1	-19.9	19	3.5	4.1	3.6	3.7	82	63	76	76	Oktober
November . .		-15.3	-12.7	-6.5	-9.8	-10.1	3.3	19	-32.9	30	1.9	2.7	2.2	2.3	83	83	83	83	November
December . .		-22.6	-16.7	-13.6	-16.4	-15.9	1.7	6	-36.2	1	1.4	1.7	1.5	1.5	81	79	79	80	December
Jahr		-6.0	0.2	5.3	2.2	1.0	30.0		-36.2		4.7	5.0	4.8	4.8	77	66	73	76	Jahr

Dovre I.

$\lambda = 9^0\ 7'\ E = 36^m\ 28^s$ $\varphi = 62^0\ 5'\ N$ $C_g = 1.25$ mb bei 961 mb

Januar	932.2	-8.4	-5.8	-4.1	-4.9	-5.1	4.6	16	-19.0	29	2.9	2.9	2.9	2.9	88	80	84	86	Januar
Februar . . .	22.5	-8.8	-5.8	-3.6	-4.8	-5.1	1.7	3	-20.0	20	2.6	2.8	2.7	2.7	83	77	80	81	Februar
März	33.4	-11.8	-8.3	-2.8	-5.6	-6.5	5.5	18	-22.1	9	2.2	2.4	2.2	2.3	80	60	66	71	März
April	32.5	-4.6	-0.5	4.4	2.6	0.7	8.4	11	-12.3	2	3.4	3.5	3.3	3.3	74	57	59	67	April
Mai	36.1	1.7	5.9	9.9	8.7	6.4	18.4	19	-3.5	2	5.3	5.4	5.1	5.2	76	60	62	71	Mai
Juni	37.1	4.3	10.1	14.8	13.6	10.4	24.0	10	1.2	2	6.6	6.2	6.0	6.2	71	51	54	67	Juni
Juli	38.8	9.8	15.3	19.8	18.1	15.5	26.9	22	5.4	10	10.0	9.0	8.9	9.2	77	54	60	72	Juli
August	34.0	8.4	11.0	14.5	12.7	11.5	19.4	8	3.2	31	8.3	7.6	7.8	7.8	85	62	72	80	August
September . .	29.9	3.0	4.9	10.2	7.2	6.5	15.7	16	-1.4	12	5.9	6.1	5.8	5.8	91	66	77	82	September
Oktober . . .	30.2	-3.9	-1.6	2.0	-0.2	-0.4	9.7	6	-15.0	19	3.9	4.1	3.8	3.9	88	73	80	82	Oktober
November . .	33.4	-10.2	-8.0	-5.8	-6.7	-7.0	4.0	19	-20.4	10	2.4	2.6	2.6	2.5	89	81	85	86	November
December . .	22.3	-14.8	-11.0	-9.9	-10.9	-10.7	2.0	30	-24.0	16	1.9	2.1	1.9	2.0	87	85	86	86	December
Jahr	931.9	-2.9	0.5	4.1	2.5	1.4	26.9		-24.0		4.6	4.6	4.4	4.5	82	67	72	78	Jahr

Dovre II.

$\lambda = 9^0\ 7'\ E = 36^m\ 28^s$ $\varphi = 62^0\ 5'\ N$

Januar		-11.2	-7.7	-5.3	-6.7	-6.9	4.9	17	-25.6	28	2.6	2.8	2.7	2.7	88	82	85	86	Januar
Februar . . .		-10.4	-6.9	-3.0	-5.3	-5.6	2.1	14	-25.9	20	2.7	3.1	2.8	2.9	84	78	82	82	Februar
März		-13.5	-9.1	-2.1	-5.2	-6.6	6.7	18	-26.2	9	2.3	2.8	2.5	2.5	84	67	72	77	März
April		-5.5	-0.4	5.3	2.9	0.8	10.1	11	-14.1	2	3.8	4.3	3.4	3.7	80	63	59	70	April
Mai		0.5	6.2	10.6	8.6	6.3	19.7	17	-4.1	15	5.6	6.1	5.4	5.6	78	64	64	74	Mai
Juni		4.1	10.0	15.3	13.4	10.4	25.5	10	-0.5	2	7.0	7.0	6.5	6.7	76	55	57	71	Juni
Juli		9.2	15.0	20.4	18.2	15.5	27.3	22	5.6	12	10.0	10.2	9.5	9.8	80	58	62	75	Juli
August		7.7	11.2	15.1	12.9	11.6	20.7	8	2.0	31	8.8	8.7	8.5	8.6	89	69	77	84	August
September . .		1.5	4.5	10.5	7.3	6.2	16.1	16	-4.2	12	6.1	6.8	6.3	6.3	95	72	81	86	September
Oktober . . .		-5.2	-2.0	2.4	0.0	-0.5	10.2	6	-19.7	19	3.9	4.4	4.0	4.1	91	79	85	87	Oktober
November . .		-12.0	-9.2	-6.3	-7.6	-7.9	5.5	19	-23.3	30	2.4	2.8	2.7	2.6	92	87	91	91	November
December . .		-18.1	-13.1	-11.3	-12.6	-12.5	1.0	4	-30.6	26	1.9	2.1	1.9	2.0	87	86	86	86	December
Jahr		-4.4	-0.1	4.3	2.2	0.9	27.3		-30.6		4.8	5.1	4.7	4.8	85	72	75	81	Jahr

1925.

Engerdalen.

H = ca. 540 m h_t = 1.4 m h_r = 1.6 m

Monat.	Bewölkung. I	II	III	Mittel.	Niederschlag. Summe.	Zahl der Tage mit Niederschlag.	≥ 0.1 mm.	≥ 1.0 mm.	Schnee. ≥ 0.1 mm.	Hagel.	Nebel.	Heiter.	Trübe.	Gewitter.	Sturm.	Windverteilung. N	NE	E	SE	S	SW	W	NW	C	Windstärke Mittel.	Monat.
Januar . . .	6.4	5.8	3.9	5.4	16.7	13	11	4	11	0	3	4	5	0	0	18	0	0	5	36	12	3	11	8	2.7	Januar
Februar . .	7.2	6.9	5.7	6.6	25.0	18	16	12	16	0	1	1	11	0	0	18	1	0	2	43	12	2	6	0	2.8	Februar
März	6.3	5.6	5.4	5.8	10.4	13	9	4	9	0	0	1	8	0	0	51	0	0	8	31	3	1	5	2	2.4	März
April	4.8	5.8	5.1	5.2	14.5	11	11	3	9	1	0	5	5	0	0	28	0	0	1	34	9	1	6	11	2.4	April
Mai	6.6	6.7	6.9	6.7	68.5	17	17	10	4	0	1	3	12	0	0	11	0	0	6	47	15	0	6	8	2.4	Mai
Juni	6.4	5.2	6.0	5.9	48.2	12	8	6	0	1	0	3	7	0	0	33	2	1	6	14	5	2	25	2	3.0	Juni
Juli	6.2	6.4	6.8	6.5	139.3	17	16	14	0	0	0	2	7	6	0	16	4	1	14	39	7	1	5	6	2.1	Juli
August . . .	7.4	7.4	7.3	7.4	116.0	24	23	15	0	0	0	0	14	4	0	26	0	0	2	50	3	1	3	8	1.9	August
September .	7.2	7.3	7.1	7.2	61.4	19	19	12	0	0	1	1	11	0	0	34	0	0	3	40	2	1	7	3	2.1	September
Oktober . .	6.6	6.6	5.3	6.2	25.8	16	11	9	5	0	0	3	10	0	1	30	0	0	4	29	6	1	12	11	2.2	Oktober
November .	7.1	6.0	6.1	6.4	22.0	15	10	6	10	0	0	2	12	0	0	32	1	0	12	23	0	0	7	15	1.6	November
December .	5.9	5.8	5.5	5.7	34.1	13	12	6	12	0	0	4	10	0	0	40	1	0	2	18	10	3	9	10	2.0	December
Jahr	6.5	6.3	5.9	6.2	581.9	188	163	101	76	2	6	29	112	10	1	337	9	2	57	404	84	16	102	84	2.3	Jahr

Plassen.

H = ca. 330 m h_t = 1.4 m h_r = 1.4 m

Monat.	I	II	III	Mittel.	Niederschlag. Summe.	Niederschlag.	≥ 0.1 mm.	≥ 1.0 mm.	Schnee.	Hagel.	Nebel.	Heiter.	Trübe.	Gewitter.	Sturm.	N	NE	E	SE	S	SW	W	NW	C	Windstärke Mittel.	Monat.
Januar . . .	8.0	7.5	6.6	7.4	23.2	10	8	7	8	0	0	2	15	0	0	5	1	2	11	3	6	1	0	64	0.5	Januar
Februar . .	7.5	7.9	7.8	7.7	46.1	14	14	13	13	0	0	0	15	0	0	2	3	0	18	15	4	2	2	38	1.0	Februar
März	5.7	6.5	5.3	5.8	22.3	17	14	7	14	0	0	6	11	0	0	14	9	0	11	3	4	1	8	43	0.9	März
April	5.7	5.8	5.3	5.6	47.9	9	8	8	3	0	0	2	5	0	0	16	3	1	16	6	7	4	4	33	1.1	April
Mai	7.4	7.9	6.4	7.2	142.0	18	17	15	3	0	1	3	15	0	0	8	0	1	22	13	9	6	3	31	1.0	Mai
Juni	6.4	7.0	6.3	6.6	35.4	13	12	11	0	0	0	3	10	0	0	30	2	6	11	4	7	7	14	9	1.9	Juni
Juli	5.8	7.1	6.8	6.6	93.2	14	14	11	0	0	0	2	12	6	0	6	0	6	15	12	8	10	7	29	1.0	Juli
August . . .	8.0	8.1	6.9	7.7	99.6	18	17	14	0	0	0	0	15	2	0	9	5	10	15	6	9	3	2	34	0.9	August
September .	8.3	8.3	7.8	8.1	65.9	19	19	13	0	1	2	0	17	1	0	4	3	14	18	10	4	1	4	32	1.0	September
Oktober . .	6.1	7.1	4.4	5.9	68.8	12	11	11	3	0	2	3	10	0	0	18	4	1	1	6	2	0	4	57	0.9	Oktober
November .	7.4	5.7	6.2	6.4	50.9	12	11	9	11	0	0	3	13	0	0	0	3	2	2	1	1	0	2	79	0.1	November
December .	7.1	5.5	5.3	6.0	59.3	10	10	9	10	0	0	5	11	0	0	0	6	1	0	0	2	0	4	80	0.2	December
Jahr	7.0	7.0	6.3	6.8	754.6	166	155	128	65	1	5	29	149	9	0	112	39	44	140	79	63	35	54	529	0.9	Jahr

Dovre I.

H = 642 m, H_b = 644.0 m h_t = 1.3 m h_r = 1.6 m

Monat.	I	II	III	Mittel.	Niederschlag. Summe.	Niederschlag.	≥ 0.1 mm.	≥ 1.0 mm.	Schnee.	Hagel.	Nebel.	Heiter.	Trübe.	Gewitter.	Sturm.	N	NE	E	SE	S	SW	W	NW	C	Windstärke Mittel.	Monat.
Januar . . .	6.6	5.3	5.7	5.9	41.0	18	14	8	14	0	0	6	9	0	1	5	0	1	4	14	7	5	3	54	1.2	Januar
Februar . .	8.5	7.2	7.1	7.6	27.0	24	20	12	20	0	0	1	15	0	3	1	0	2	2	30	7	4	0	38	2.0	Februar
März	6.1	6.6	7.0	6.6	12.0	20	11	5	11	1	0	1	11	0	0	18	4	1	0	22	1	11	14	22	1.8	März
April	5.3	6.4	5.4	5.7	9.5	8	7	4	6	0	0	6	9	0	0	7	1	0	2	39	3	6	6	26	1.8	April
Mai	6.6	7.4	7.4	7.1	35.3	17	13	10	4	0	0	4	16	0	1	2	0	0	3	60	6	4	4	14	2.6	Mai
Juni	7.2	6.7	6.8	6.9	9.2	12	7	3	1	1	0	1	14	0	0	9	0	0	1	18	4	16	19	23	1.8	Juni
Juli	6.4	7.2	7.6	7.1	56.5	18	14	9	0	0	0	0	14	0	0	1	0	1	2	46	6	9	4	24	2.1	Juli
August . . .	8.3	8.1	8.4	8.3	69.1	26	21	15	0	0	0	0	19	0	0	3	0	0	0	44	3	13	8	22	2.3	August
September .	7.8	8.0	7.6	7.8	91.5	19	18	14	0	0	0	1	17	0	0	0	0	0	4	32	6	4	2	42	1.6	September
Oktober . .	7.8	6.4	7.0	7.1	39.8	19	18	11	11	0	0	1	11	0	0	2	3	3	0	26	2	11	2	44	1.6	Oktober
November .	7.7	7.5	6.2	7.1	57.1	20	15	10	15	0	0	2	14	0	0	1	1	6	2	16	0	1	1	62	1.0	November
December .	6.0	6.6	5.8	6.1	29.0	21	14	10	14	0	0	4	10	0	0	0	0	1	1	12	1	3	1	74	0.9	December
Jahr	7.0	7.0	6.8	6.9	477.0	222	172	111	96	2	0	27	159	0	5	49	9	15	21	359	46	87	64	445	1.7	Jahr

Dovre II.

H = ca. 570 m h_t = 1.5 m h_r = 1.7 m

Monat.	I	II	III	Mittel.	Niederschlag. Summe.	Niederschlag.	≥ 0.1 mm.	≥ 1.0 mm.	Schnee.	Hagel.	Nebel.	Heiter.	Trübe.	Gewitter.	Sturm.	N	NE	E	SE	S	SW	W	NW	C	Windstärke Mittel.	Monat.
Januar . . .	6.7	6.5	5.8	6.3	38.6	17	13	8	11	0	1	6	13	0	0	6	1	3	11	1	2	1	12	56	0.8	Januar
Februar . .	8.6	7.5	7.4	7.8	22.1	25	18	7	18	0	0	1	16	0	0	6	2	3	24	7	2	4	4	32	1.1	Februar
März	6.5	6.8	7.3	6.9	8.1	22	7	2	7	1	0	1	13	0	0	8	3	1	13	5	2	5	23	33	1.1	März
April	5.5	6.9	5.8	6.1	5.4	9	7	2	5	4	0	4	10	0	0	1	1	5	21	2	2	4	16	38	1.1	April
Mai	6.7	7.5	7.4	7.2	26.4	17	14	9	4	0	0	4	14	0	0	4	0	2	25	20	0	5	18	19	1.4	Mai
Juni	7.4	6.9	7.0	7.1	6.9	13	10	3	0	0	0	2	15	1	0	1	0	2	9	3	0	8	51	16	1.5	Juni
Juli	6.5	7.7	8.3	7.5	32.1	20	13	6	0	0	1	0	16	5	0	2	1	1	25	17	3	0	15	29	0.9	Juli
August . . .	8.3	8.1	8.5	8.3	48.2	29	18	12	0	0	0	0	17	1	0	1	0	0	21	13	0	4	29	25	1.5	August
September .	8.3	8.0	8.0	8.1	68.3	21	17	14	0	0	2	2	18	0	0	0	1	1	22	4	2	3	18	39	0.9	September
Oktober . .	8.5	6.8	7.6	7.6	38.3	26	17	10	13	0	0	1	19	0	0	2	1	0	14	3	0	2	31	40	1.4	Oktober
November .	7.9	7.7	8.0	7.9	58.3	21	15	8	14	0	0	1	18	0	0	3	1	0	10	2	0	1	15	58	0.6	November
December .	6.5	7.0	6.7	6.7	19.8	19	15	7	15	0	0	4	13	0	0	5	0	0	10	4	0	3	5	66	0.6	December
Jahr	7.3	7.3	7.3	7.3	372.5	239	164	88	87	5	4	26	182	7	0	39	11	18	205	81	13	40	237	451	1.1	Jahr

Fokstua.

$\lambda = 9^0\ 16'\ E = 37^m\ 4^s$ $\varphi = 62^0\ 14'\ N$

Monat.	Luftdruck. (Normalschwere). Mittel.	Luft-Temperatur. Min.	I	II	III	Mittel.	beobachtetes Max.	Dat.	Min.	Dat.	Absolute Feuchtigkeit. I	II	III	Mittel.	Relat. Feuchtigk. I	II	III	Mittel.	Monat.
Januar		-9.6	-6.0	-4.4	-5.8	-5.6	2.4	18	-21.1	29	2.6	2.7	2.5	2.6	77	73	75	76	Januar
Februar		-11.5	-7.6	-5.5	-7.1	-7.1	-0.6	12	-23.9	20	2.4	2.6	2.5	2.5	82	76	79	80	Februar
März		-15.7	-10.7	-6.1	-8.4	-9.4	2.5	18	-27.4	9	2.1	2.2	2.0	2.1	79	64	68	72	März
April		-8.3	-3.8	1.7	-0.4	-2.4	6.2	12	-15.2	1	2.7	3.2	2.9	2.8	72	60	59	66	April
Mai		-1.0	3.8	7.4	5.8	3.8	14.8	17	-8.5	4	4.3	4.5	4.1	4.2	71	58	58	66	Mai
Juni		2.2	8.1	12.7	11.1	8.2	22.0	10	-1.1	3	5.3	5.4	5.0	5.1	64	49	51	61	Juni
Juli		7.1	13.4	17.3	15.5	13.1	23.1	21	3.2	11	7.8	7.8	7.3	7.5	69	54	57	65	Juli
August		6.0	9.2	12.1	10.4	9.4	18.1	8	-0.4	16	6.8	6.4	6.3	6.4	78	61	68	74	August
September		0.2	3.6	8.0	4.8	4.4	12.9	17	-4.6	12	5.1	5.2	4.9	5.0	85	63	74	78	September
Oktober		-6.3	-2.9	-0.2	-2.3	-2.4	7.2	1	-18.9	19	3.2	3.4	3.3	3.3	81	72	79	78	Oktober
November		-12.8	-8.7	-6.3	-8.4	-8.1	2.0	19	-23.8	10	2.2	2.5	2.2	2.3	81	75	77	79	November
December		-16.2	-11.0	-10.7	-11.9	-11.4	0.8	30	-26.0	16	2.0	2.1	1.9	2.0	80	80	80	80	December
Jahr		-5.5	-1.0	2.2	0.3	-0.6	23.1		-27.4		3.9	4.0	3.7	3.8	77	65	69	73	Jahr

Ulstad.

$\lambda = 8^0\ 34'\ E = 34^m\ 16^s$ $\varphi = 61^0\ 50'\ N$

Januar		-6.6	-3.9	-3.2	-3.4	-3.7	7.5	18	-19.5	29									Januar
Februar		-8.2	-5.7	-3.3	-3.7	-4.6	4.0	12	-21.0	20									Februar
März		-10.1	-6.9	-1.5	-3.4	-4.8	5.6	18	-23.8	9									März
April		-2.0	0.1	6.3	4.3	2.4	9.5	26	-7.1	2									April
Mai		3.3	7.1	12.1	10.4	8.1	20.9	19	-1.1	2									Mai
Juni		7.6	11.2	16.8	14.4	12.3	25.8	10	2.9	4									Juni
Juli		11.8	15.0	20.9	19.3	16.6	27.2	23	7.1	12									Juli
August		10.1	12.2	16.5	13.8	13.1	20.7	8	3.8	16									August
September		4.3	6.2	11.4	8.9	7.9	15.3	17	-1.7	27									September
Oktober		-1.7	0.4	3.4	1.8	1.4	11.1	2	-11.8	18									Oktober
November		-8.9	-6.5	-4.4	-5.6	-5.7	6.9	19	-22.2	30									November
December		-15.8	-11.0	-10.2	-10.9	-10.9	4.2	30	-28.2	26									December
Jahr		-1.4	1.5	5.4	3.8	2.7	27.2		-28.2										Jahr

Vinstra.

$\lambda = 9^0\ 46'\ E = 39^m\ 4^s$ $\varphi = 61^0\ 36'\ N$ $C_g = 1.15$ mb bei 922 mb

Januar		-11.1	-7.7	-4.8	-6.1	-6.6	7.4	16	-19.1	29	2.4	2.7	2.6	2.6	82	79	78	80	Januar
Februar		-10.6	-6.5	-1.5	-4.9	-4.9	5.4	12	-21.6	5	2.6	2.9	2.7	2.7	80	67	78	77	Februar
März		-11.2	-6.5	-0.4	-2.9	-4.5	7.1	30	-22.2	9	2.4	2.6	2.4	2.4	74	54	60	65	März
April		-2.9	1.8	8.4	4.1	3.0	13.4	10	-9.2	2	3.6	3.9	3.6	3.6	66	47	56	62	April
Mai		2.8	8.4	13.5	10.1	8.4	22.6	19	-3.2	2	5.8	6.2	5.7	5.8	69	54	62	68	Mai
Juni		6.6	13.3	19.0	16.3	13.5	29.0	10	2.5	4	6.6	7.0	6.4	6.6	58	44	47	56	Juni
Juli		11.7	17.0	20.8	18.4	16.7	30.4	22	7.6	12	10.1	9.6	9.8	9.7	71	54	63	70	Juli
August		10.0	13.4	17.0	13.9	13.5	21.4	6	4.4	17	8.9	8.2	8.8	8.5	78	58	74	77	August
September		3.8	6.6	12.5	8.6	8.0	15.4	17	-1.0	14	5.6	6.7	6.8	6.3	76	62	82	77	September
Oktober		-2.8	0.0	5.0	2.6	1.7	13.9	9	-11.4	19	3.8	4.1	3.8	3.9	78	62	66	70	Oktober
November		-11.4	-8.7	-6.3	-8.1	-7.9	5.7	20	-24.0	30	2.3	2.6	2.3	2.4	84	78	81	82	November
December		-20.3	-15.4	-12.9	-13.9	-14.3	-0.2	8	-29.5	16	1.6	1.8	1.7	1.7	82	79	79	80	December
Jahr		-3.0	1.3	5.9	3.2	2.2	30.4		-29.5		4.6	4.9	4.7	4.7	75	62	69	72	Jahr

Granheim.

$\lambda = 8^0\ 58'\ E = 35^m\ 52^s$ $\varphi = 61^0\ 6'\ N$ $C_g = 1.15$ mb bei 922 mb

Januar	964.4	-7.8	-4.7	-3.1	-4.2	-4.3	7.8	16	-18.0	29	2.8	3.1	2.9	2.9	81	78	78	79	Januar
Februar	54.6	-10.0	-6.9	-3.3	-5.3	-5.7	4.0	5	-27.6	21	2.5	2.9	2.8	2.7	80	73	81	79	Februar
März	65.1	-13.8	-9.9	-1.4	-4.0	-6.5	7.0	30	-27.1	9	2.0	2.4	2.3	2.1	79	54	63	69	März
April	63.7	-4.8	-0.3	6.3	3.0	1.2	9.8	11	-12.0	2	3.6	3.5	3.2	3.3	76	48	54	66	April
Mai	65.9	1.9	6.8	11.0	9.1	6.9	19.4	19	-3.7	2	5.6	5.3	5.2	5.3	75	54	59	71	Mai
Juni	66.7	6.7	13.2	17.4	15.3	12.9	27.2	10	1.2	4	6.5	5.8	5.7	5.9	58	40	45	56	Juni
Juli	68.4	10.9	15.8	21.2	18.9	16.4	27.8	3	6.4	12	9.8	8.6	9.0	9.0	74	47	56	70	Juli
August	63.7	9.6	12.6	16.3	14.5	13.2	21.0	7	4.4	16	8.3	8.0	7.7	7.9	77	59	62	70	August
September	60.2	4.5	6.5	11.1	9.0	7.9	15.4	15	0.3	26	6.2	6.3	6.1	6.1	85	63	70	76	September
Oktober	61.1	-1.4	0.9	4.1	2.0	1.7	12.7	2	-10.8	15	3.8	4.0	3.7	3.8	75	63	68	70	Oktober
November	64.9	-7.9	-6.3	-4.1	-5.5	-5.5	8.8	20	-19.8	30	2.7	2.8	2.6	2.7	83	77	76	80	November
December	53.7	-18.7	-14.4	-12.3	-13.5	-13.7	3.9	6	-28.8	16	1.8	1.9	1.8	1.8	84	80	81	82	December
Jahr	62.8	-2.6	1.1	5.3	3.3	2.0	27.8		-28.8		4.6	4.6	4.4	4.5	77	61	66	72	Jahr

1925.

Fokstua.

H = 952 m h_t = 1.6 m h_r = 1.6 m

Monat.	Bewölkung. I	II	III	Mittel.	Niederschlag. Summe.	Zahl der Tage mit Niederschlag.	≥0.1 mm.	≥1.0 mm.	Schnee. ≥0.1 mm.	Hagel.	Nebel.	Heiter.	Trübe.	Gewitter	Sturm.	Windverteilung. N	NE	E	SE	S	SW	W	NW	C	Windstärke. Mittel.	Monat.
Januar . . .	6.3	5.8	5.7	5.9	36.0	17	15	9	15	2	0	6	12	0	2	0	0	2	0	14	12	21	7	37	2.2	Januar
Februar . .	7.8	7.2	6.9	7.3	20.4	21	13	8	13	0	1	1	13	0	2	2	1	6	3	14	10	28	2	18	2.7	Februar
März	5.2	6.2	6.6	6.0	8.9	19	9	3	9	0	0	3	6	0	0	2	0	6	3	7	6	26	9	34	2.0	März
April	5.2	6.0	5.9	5.7	4.8	12	6	2	6	1	0	4	8	0	0	3	1	2	4	23	12	18	8	19	2.1	April
Mai	5.8	6.3	6.4	6.2	23.1	17	12	7	4	1	0	6	9	0	1	1	2	4	9	29	14	13	4	17	2.5	Mai
Juni	6.4	6.2	6.2	6.3	8.2	12	3	1	2	1	0	2	9	2	0	6	5	2	1	4	17	34	10	11	2.1	Juni
Juli	5.5	6.6	7.2	6.4	50.3	18	11	9	0	0	3	1	8	2	0	0	5	10	3	8	10	28	5	24	1.9	Juli
August . . .	7.3	7.5	7.5	7.4	66.7	23	21	17	1	3	0	0	10	2	0	2	1	5	4	21	10	24	6	20	2.2	August
September .	7.5	7.1	7.1	7.2	65.3	19	16	11	6	3	0	0	9	0	0	4	1	4	1	22	12	20	3	23	1.9	September
Oktober . .	7.5	6.5	6.7	6.9	33.7	25	15	10	14	2	1	1	11	0	1	0	1	1	0	16	14	38	3	20	2.0	Oktober
November .	7.0	7.0	5.5	6.5	54.7	18	17	12	17	0	1	4	11	0	0	0	1	2	0	8	9	32	5	33	1.8	November
December .	6.3	6.2	4.9	5.8	17.6	18	11	10	11	0	1	3	8	0	0	5	1	7	0	17	7	22	4	30	2.0	December
Jahr	6.5	6.6	6.4	6.5	389.7	219	149	99	98	13	7	31	114	6	6	25	19	51	28	183	133	304	66	286	2.1	Jahr

Ulstad.

H = 380 m h_t = 1.7 m h_r = 1.0 m

Januar . . .	7.1	6.4	5.6	6.4	52.1	17	13	9	9	0	0	5	12	0	0	0	1	27	0	0	0	48	1	16	2.0	Januar
Februar . .	7.8	7.7	8.2	7.9	37.5	19	17	11	17	0	1	1	19	0	0	0	0	26	0	0	0	54	2	2	2.0	Februar
März	6.7	6.5	7.1	6.8	6.7	14	8	4	7	0	1	3	12	0	0	0	10	11	0	0	0	63	6	3	1.8	März
April	5.0	5.9	6.4	5.8	0.8	6	3	0	2	0	0	4	5	0	0	0	2	16	0	0	0	59	5	8	1.6	April
Mai	5.8	6.9	7.4	6.7	12.1	11	8	5	0	0	7	5	15	0	0	0	34	21	0	0	0	35	1	2	2.0	Mai
Juni	6.2	5.9	6.4	6.2	7.3	11	7	1	0	0	1	4	11	0	0	0	5	32	0	0	0	44	8	1	1.8	Juni
Juli	6.6	7.1	7.4	7.0	28.0	12	8	5	0	0	10	0	11	2	0	1	7	27	1	0	0	46	5	6	1.4	Juli
August . . .	8.0	8.2	8.0	8.1	59.4	24	22	13	0	0	19	0	15	0	0	0	10	27	0	0	0	47	5	4	1.7	August
September .	7.8	7.7	7.7	7.7	45.7	18	14	10	0	0	9	0	14	0	0	2	11	28	1	0	0	42	4	2	1.8	September
Oktober . .	7.7	7.1	6.7	7.2	36.2	21	17	5	5	0	6	1	14	0	0	2	6	20	0	0	0	52	12	1	2.1	Oktober
November .	8.3	7.5	7.2	7.7	50.9	18	15	9	14	0	4	1	16	0	0	0	13	25	0	0	0	29	10	13	1.5	November
December .	7.0	6.7	5.8	6.5	14.6	16	12	3	11	0	0	2	9	0	0	0	4	26	0	0	0	48	6	9	1.6	December
Jahr	7.0	7.0	7.0	7.0	351.3	187	144	75	65	0	58	26	153	2	0	5	103	286	2	0	0	567	65	67	1.8	Jahr

Vinstra.

H = 243 m h_t = 1.5 m h_r = 0.9 m

Januar . . .	6.5	4.9	3.7	5.0	16.2	7	6	4	6	0	1	5	6	0	0	12	2	2	2	0	0	3	15	57	0.9	Januar
Februar . .	7.5	6.4	5.4	6.4	24.5	12	7	7	7	0	1	4	13	0	0	7	6	6	7	1	0	4	4	49	0.9	Februar
März	5.8	4.9	5.7	5.5	4.8	6	4	2	4	0	0	2	8	0	0	21	3	6	8	0	2	4	6	43	1.3	März
April	4.4	5.1	4.5	4.7	8.5	4	4	2	0	0	0	9	6	0	0	16	8	15	4	4	3	1	3	36	1.2	April
Mai	6.4	6.5	5.9	6.3	51.6	13	12	12	0	0	0	6	11	0	0	7	1	19	7	7	5	3	5	39	1.4	Mai
Juni	6.1	5.7	5.4	5.7	45.4	4	3	3	0	0	0	5	5	1	0	29	5	13	4	0	1	2	12	24	1.8	Juni
Juli	6.5	6.3	5.8	6.2	55.2	10	9	7	0	0	0	2	9	4	0	14	5	14	4	1	0	1	2	52	1.0	Juli
August . . .	7.9	7.4	8.0	7.8	74.3	17	16	14	0	0	0	0	15	1	0	18	8	2	8	0	0	2	9	46	1.4	August
September .	7.8	6.5	7.9	7.4	76.4	15	15	13	0	0	1	1	12	0	0	10	1	10	5	1	0	1	3	59	0.8	September
Oktober . .	6.1	6.2	5.5	5.9	28.8	8	7	7	2	0	2	3	10	0	0	22	1	1	7	1	1	4	5	51	1.2	Oktober
November .	7.4	5.8	4.3	5.8	29.6	9	8	7	7	0	0	4	9	0	0	12	6	2	7	0	0	0	1	62	0.6	November
December .	6.4	5.7	5.0	5.7	40.0	12	10	9	10	0	1	6	9	0	0	13	2	1	1	0	0	0	5	71	0.5	December
Jahr	6.6	6.0	5.6	6.0	455.3	117	101	87	36	0	6	47	113	6	0	181	48	91	64	15	12	25	70	589	1.1	Jahr

Granheim.

H = 389 m, H_b = 390.9 m h_t = 1.8 m h_r = 1.5 m

Januar . . .	6.1	6.0	4.2	5.4	46.0	11	11	10	8	1	1	6	7	0	0	10	3	3	1	0	13	2	25	36	1.6	Januar
Februar . .	7.6	6.8	6.2	6.9	54.7	19	18	11	16	0	0	4	15	0	0	6	1	0	4	6	9	0	11	47	1.0	Februar
März	4.7	5.4	5.3	5.1	11.1	8	8	4	8	0	0	4	5	0	0	10	1	0	2	1	11	0	30	38	1.6	März
April	4.2	6.1	3.9	4.7	21.3	5	5	3	3	0	0	6	6	0	0	4	0	0	0	0	19	3	22	42	1.1	April
Mai	6.7	7.2	6.4	6.8	94.9	17	17	12	0	0	0	4	15	0	0	3	2	2	4	2	32	2	19	27	1.4	Mai
Juni	6.1	5.6	5.0	5.6	13.4	6	5	2	0	0	0	3	7	1	0	2	0	0	1	0	11	0	56	20	2.4	Juni
Juli	5.7	6.8	6.9	6.5	54.8	12	12	7	0	0	0	0	9	5	0	1	1	0	4	19	13	0	23	32	1.8	Juli
August . . .	7.1	7.4	7.5	7.3	60.5	21	21	16	0	0	0	0	14	0	0	6	0	0	0	1	30	2	29	25	2.0	August
September .	8.7	6.6	7.1	7.5	72.6	16	16	11	0	0	7	0	12	0	0	3	0	0	0	2	25	0	26	34	1.8	September
Oktober . .	7.1	6.2	4.9	6.1	65.3	13	12	12	5	0	1	1	11	0	1	2	0	1	2	2	5	1	44	36	2.1	Oktober
November .	8.2	7.2	6.6	7.3	36.0	13	12	5	11	0	0	1	14	0	0	9	5	0	6	0	13	0	20	37	1.1	November
December .	5.5	5.8	4.9	5.4	38.9	13	13	10	13	0	0	5	8	0	0	6	1	1	1	1	8	0	11	64	0.6	December
Jahr	6.5	6.4	5.7	6.2	569.5	154	150	103	64	1	9	34	123	6	1	62	14	7	25	34	189	10	316	338	1.5	Jahr

1925.

Aabjørsbraaten.

$\lambda = 9^0\ 17'$ E $= 37^m\ 8^s$ $\varphi = 60^0\ 55'$ N

Monat.	Luftdruck. Normalschwere. Mittel.	Luft-Temperatur. Min.	I	II	III	Mittel.	beobachtetes Max.	Dat.	Min.	Dat.	Absolute Feuchtigkeit. I	II	III	Mittel.	Relat. Feuchtigk. I	II	III	Mittel.	Monat.
Januar		-7.9	-5.2	-2.5	-4.1	-4.3	4.6	16	-17.5	28									Januar
Februar		-9.0	-6.5	-3.1	-5.4	-5.4	1.8	5	-22.5	20									Februar
März		-12.6	-7.8	-1.1	-6.3	-6.3	5.7	18	-24.1	9									März
April		-5.2	-0.6	5.8	1.5	0.4	10.9	10	-10.3	7									April
Mai		1.0	5.3	10.3	7.6	5.8	20.6	19	-4.6	1									Mai
Juni		5.2	11.2	17.6	13.5	11.6	28.0	10	0.6	3									Juni
Juli		10.0	14.6	20.2	18.1	15.5	27.2	23	3.6	11									Juli
August		8.1	10.8	15.2	13.5	11.8	21.0	6	0.4	16									August
September		2.3	5.4	10.7	6.6	6.4	14.9	16	-1.6	26									September
Oktober		-3.5	-0.4	3.2	0.5	0.4	12.1	1	-14.3	19									Oktober
November		-10.3	-7.8	-5.2	-7.5	-7.1	5.5	20	-20.5	10									November
December		-14.9	-10.3	-8.9	-10.6	-10.1	1.3	30	-23.5	16									December
Jahr		-3.1	0.7	5.2	2.3	1.6	28.0		-24.1										Jahr

Lillehammer.

$\lambda = 10^0\ 28'$ E $= 41^m\ 52^s$ $\varphi = 61^0\ 7'$ N $C_g = 1.35$ mb bei 1023 mb

Monat.	Luftdruck. Normalschwere. Mittel.	Min.	I	II	III	Mittel.	Max.	Dat.	Min.	Dat.	I	II	III	Mittel.	I	II	III	Mittel.	Monat.
Januar	988.4	-7.9	-5.0	-3.1	-4.4	-4.5	7.4	17	-15.0	28	2.8	3.0	2.7	2.8	82	75	76	78	Januar
Februar	78.5	-6.9	-4.0	-0.8	-2.2	-2.8	5.2	12	-16.8	22	3.0	3.3	3.0	3.1	81	71	72	76	Februar
März	88.8	-9.4	-6.3	0.7	-2.2	-3.7	8.4	19	-18.4	10	2.5	2.9	2.5	2.5	76	56	60	66	März
April	86.7	-1.6	1.4	8.5	6.5	3.7	13.9	12	-9.6	2	4.0	4.4	3.8	4.0	75	52	52	65	April
Mai	90.0	4.2	7.4	12.4	11.3	8.6	23.0	20	-1.1	2	5.9	6.3	5.9	5.9	76	59	59	71	Mai
Juni	88.6	8.9	13.4	19.2	17.9	14.6	31.0	10	4.2	3	7.5	7.4	7.2	7.3	65	46	48	61	Juni
Juli	90.5	13.5	16.9	23.0	21.3	18.5	30.2	23	8.0	10	10.3	11.3	10.5	10.6	73	56	57	68	Juli
August	86.4	11.2	13.4	17.9	16.4	14.6	23.7	5	4.9	31	9.0	9.3	8.8	8.9	79	62	65	73	August
September	83.1	5.4	7.6	13.4	10.1	9.3	17.2	16	1.7	14	6.5	7.3	6.5	6.7	81	64	71	74	September
Oktober	84.0	-0.9	1.0	5.9	3.1	2.7	16.6	1	-10.0	19	3.9	4.6	4.0	4.2	77	65	68	71	Oktober
November	88.7	-8.7	-6.9	-4.1	-5.9	-5.8	5.5	20	-19.1	30	2.6	2.7	2.5	2.6	83	75	78	80	November
December	77.6	-15.4	-11.9	-10.3	-11.1	-11.3	3.2	6	-22.6	16	1.9	2.1	2.0	2.0	83	78	79	80	December
Jahr	85.9	-0.6	2.2	6.9	5.1	3.7	31.0		-22.6		5.0	5.4	5.0	5.0	78	63	65	72	Jahr

Mesnalien.

$\lambda = 10^0\ 43'$ E $= 42^m\ 52^s$ $\varphi = 61^0\ 6'$ N $C_g = 1.15$ mb bei 919 mb

Monat.	Luftdruck. Normalschwere. Mittel.	Min.	I	II	III	Mittel.	Max.	Dat.	Min.	Dat.	I	II	III	Mittel.	I	II	III	Mittel.	Monat.
Januar	942.0	-8.8	-6.0	-3.6	-5.8	-5.4	4.0	16	-15.0	24	2.8	3.1	2.7	2.9	86	81	80	83	Januar
Februar	32.5	-8.6	-6.2	-3.2	-4.9	-5.2	1.0	12	-17.0	21	2.7	3.3	2.9	3.0	85	84	82	84	Februar
März	42.1	-10.5	-7.2	-2.3	-6.3	-6.1	5.3	4	-19.9	14	2.3	3.3	2.4	2.6	77	79	75	76	März
April	41.7	-2.6	-0.2	5.0	1.2	0.8	9.6	11	-10.6	4	3.8	4.8	3.8	4.0	79	72	74	77	April
Mai	45.8	2.2	6.5	9.4	7.2	6.1	18.0	19	-3.6	2	5.4	5.6	6.0	5.6	74	63	78	80	Mai
Juni	44.9	5.6	13.7	15.9	14.3	12.1	26.2	10	0.4	15	6.1	6.9	6.8	6.5	52	52	56	55	Juni
Juli	46.9	10.4	17.1	19.9	17.3	15.9	27.0	23	6.6	10	9.4	10.0	10.0	9.7	65	58	69	70	Juli
August	42.4	8.4	11.3	14.9	12.4	11.7	20.2	8	2.3	31	8.2	9.2	9.2	8.8	83	73	87	86	August
September	38.7	3.0	5.5	10.2	6.5	6.4	14.4	17	-0.3	27	6.2	6.7	6.2	6.3	91	72	85	86	September
Oktober	38.5	-2.9	-0.9	3.4	0.2	0.3	13.4	1	-11.8	19	3.9	4.5	3.8	4.1	86	75	78	81	Oktober
November	41.7	-10.0	-7.6	-4.8	-7.6	-6.9	3.4	20	-21.4	30	2.1	3.0	2.3	2.5	71	84	80	77	November
December	30.2	-14.0	-10.0	-9.1	-11.6	-10.4	1.8	6	-22.6	1	1.7	2.0	1.6	1.8	69	78	73	72	December
Jahr	40.6	-2.3	1.3	4.6	1.9	1.6	27.0		-22.6		4.6	5.2	4.8	4.8	76	73	76	77	Jahr

Rena.

$\lambda = 11^0\ 22'$ E $= 45^m\ 28^s$ $\varphi = 61^0\ 8'$ N $C_g = 1.35$ mb bei 1002 mb

Monat.	Luftdruck. Normalschwere. Mittel.	Min.	I	II	III	Mittel.	Max.	Dat.	Min.	Dat.	I	II	III	Mittel.	I	II	III	Mittel.	Monat.
Januar	984.3	-10.2	-7.5	-4.6	-5.9	-6.3	4.6	17	-18.2	21	2.7	3.0	2.8	2.8	89	86	88	88	Januar
Februar	75.0	-10.9	-7.5	-2.4	-4.5	-5.4	3.9	11	-23.7	22	2.6	3.3	3.0	3.0	87	79	84	85	Februar
März	84.8	-14.2	-9.9	-0.1	-4.5	-6.1	8.1	18	-25.8	14	2.2	2.8	2.4	2.4	85	57	68	74	März
April	83.0	-4.4	0.0	7.8	3.8	1.9	13.3	11	-17.5	2	3.8	3.8	3.7	3.7	79	47	59	71	April
Mai	86.6	2.7	7.3	12.3	10.5	8.0	21.9	19	-3.9	2	5.9	6.0	5.8	5.8	76	57	62	74	Mai
Juni	84.8	7.0	13.7	18.8	16.9	13.8	29.0	10	1.1	5	7.0	6.6	6.6	6.6	60	42	47	59	Juni
Juli	86.8	11.6	17.1	23.2	20.0	17.7	30.7	22	6.5	3	10.6	9.4	10.0	9.9	74	45	58	72	Juli
August	82.6	9.6	12.7	17.4	14.7	13.5	24.1	8	1.3	31	8.8	8.8	9.3	8.9	81	60	75	80	August
September	79.4	3.8	6.9	12.9	8.7	8.3	18.2	16	-1.4	12	6.5	6.7	7.0	6.6	86	60	82	81	September
Oktober	80.1	-4.3	-1.7	5.7	0.9	0.8	17.5	1	-17.1	19	3.8	4.2	3.9	4.0	88	60	76	78	Oktober
November	84.7	-14.0	-11.6	-7.5	-9.8	-9.9	2.8	20	-26.2	30	2.1	2.5	2.3	2.3	88	84	88	88	November
December	73.7	-21.8	-16.2	-14.2	-15.9	-15.7	3.9	6	-32.2	20	1.5	1.7	1.6	1.6	86	84	84	85	December
Jahr	82.2	-3.8	0.3	5.8	2.9	1.7	30.7		-32.2		4.8	4.9	4.9	4.8	82	63	73	78	Jahr

1925.

Aabjørsbraaten.

H = 671 m h_t = 1.5 m h_r = 1.6 m

Monat.	Bewölkung. I	II	III	Mittel.	Niederschlag. Summe.	Zahl der Tage mit Niederschlag.	≥ 0.1 mm.	≥ 1.0 mm.	Schnee. ≥ 0.1 mm.	Hagel.	Nebel.	Heiter.	Trübe.	Gewitter.	Sturm.	Windverteilung. N	NE	E	SE	S	SW	W	NW	C	Windstärke. Mittel.	Monat.
Januar . . .	5.1	4.9	2.4	4.1	22.6	8	7	6	7	0	0	6	3	0	0	2	0	1	0	4	18	3	3	62	0.4	Januar
Februar . .	5.8	5.9	5.4	5.7	62.3	18	17	15	17	0	0	6	11	0	0	0	1	2	3	6	13	1	0	58	0.4	Februar
März	4.2	3.7	4.1	4.0	8.3	7	7	3	7	0	0	10	4	0	0	0	1	1	1	2	9	0	0	79	0.2	März
April	3.5	4.2	4.5	4.1	18.2	10	10	5	6	0	0	9	4	0	0	0	0	2	3	1	7	1	2	74	0.2	April
Mai	6.5	6.1	5.8	6.1	54.5	13	13	12	0	0	0	5	12	0	0	0	1	0	0	2	4	0	0	86	0.1	Mai
Juni	4.6	4.0	4.1	4.2	22.3	5	5	5	0	0	0	9	4	0	0	1	1	2	2	3	8	1	4	68	0.3	Juni
Juli	4.3	6.1	5.7	5.4	90.3	15	13	9	0	0	0	2	4	2	0	4	0	10	4	7	2	0	0	66	0.3	Juli
August . . .	7.0	7.3	6.2	6.8	72.5	23	21	16	0	0	0	2	14	0	0	8	3	5	4	13	1	0	1	58	0.5	August
September .	5.3	6.1	5.9	5.8	87.9	16	15	15	0	0	0	4	8	0	0	0	1	0	2	2	3	0	0	82	0.1	September
Oktober . .	5.1	5.4	4.8	5.1	36.8	10	10	10	6	0	0	6	9	0	0	0	2	2	1	2	3	0	3	80	0.2	Oktober
November .	4.9	4.9	4.7	4.8	34.0	8	7	6	7	0	0	11	7	0	0	0	0	1	1	1	6	0	0	81	0.1	November
December .	4.6	4.2	3.7	4.2	38.4	9	8	6	8	0	0	12	5	0	0	1	0	0	4	2	10	1	0	75	0.2	December
Jahr	5.1	5.2	4.8	5.0	548.1	142	133	108	58	0	0	82	85	2	0	16	10	26	25	45	84	7	13	869	0.2	Jahr

Lillehammer.

H = 188 m, H_b = 195.1 m h_t = 7.1 m h_r = 2.1 m

Monat.	I	II	III	Mittel.	Niederschlag. Summe.	Niederschlag.	≥ 0.1 mm.	≥ 1.0 mm.	Schnee. ≥ 0.1 mm.	Hagel.	Nebel.	Heiter.	Trübe.	Gewitter.	Sturm.	N	NE	E	SE	S	SW	W	NW	C	Windstärke. Mittel.	Monat.
Januar . . .	5.1	6.6	4.9	5.5	28.4	7	7	7	6	0	1	8	10	0	0	9	1	1	3	0	2	2	4	71	0.5	Januar
Februar . .	6.7	7.7	6.5	7.0	57.9	16	16	14	14	0	1	4	15	0	0	3	0	1	4	12	4	0	6	54	0.8	Februar
März	6.1	5.6	5.1	5.6	14.8	10	9	7	9	0	0	5	8	0	0	13	6	3	8	4	2	1	8	48	1.0	März
April	4.5	6.4	5.4	5.4	30.1	9	8	7	2	0	0	6	7	0	0	8	5	3	9	9	10	4	7	35	1.1	April
Mai	7.0	7.4	5.9	6.8	70.1	17	16	12	0	0	1	5	14	0	0	3	5	2	5	30	6	3	1	38	1.0	Mai
Juni	5.5	6.9	6.3	6.2	28.0	11	10	3	0	0	0	3	10	1	0	8	2	3	2	9	11	3	27	25	1.7	Juni
Juli	5.1	7.8	7.3	6.7	108.4	11	10	9	0	0	0	1	13	3	0	9	0	2	6	16	9	3	8	40	0.9	Juli
August . . .	7.6	8.4	7.8	7.9	81.4	23	22	17	0	0	0	1	18	1	0	10	3	1	5	16	17	1	8	32	1.3	August
September .	7.8	7.4	7.0	7.4	82.6	16	16	10	0	0	0	1	12	1	0	5	1	3	13	9	9	0	7	43	1.3	September
Oktober . .	5.6	6.9	5.5	6.0	49.5	10	10	8	2	0	0	4	13	0	0	7	3	0	6	4	1	0	20	52	0.9	Oktober
November .	6.3	6.0	6.1	6.1	36.4	11	10	7	10	0	0	8	14	0	0	6	0	1	1	1	0	0	7	74	0.3	November
December .	5.7	5.9	5.4	5.7	40.5	15	12	6	12	0	0	7	11	0	0	10	0	2	2	2	1	1	4	71	0.3	December
Jahr	6.1	6.9	6.1	6.4	628.1	156	146	107	55	0	3	53	145	6	0	91	26	22	64	112	72	18	107	583	0.9	Jahr

Mesnalien.

H = 571 m, H_b = 574.1 m h_t = 1.5 m h_r = 1.2 m

Monat.	I	II	III	Mittel.	Niederschlag. Summe.	Niederschlag.	≥ 0.1 mm.	≥ 1.0 mm.	Schnee. ≥ 0.1 mm.	Hagel.	Nebel.	Heiter.	Trübe.	Gewitter.	Sturm.	N	NE	E	SE	S	SW	W	NW	C	Windstärke. Mittel.	Monat.
Januar . . .	4.9	4.4	3.5	4.3	47.1	9	9	5	9	0	1	8	5	0	0	9	6	2	3	5	2	4	2	60	0.8	Januar
Februar . .	7.0	6.6	6.1	6.6	55.8	16	15	11	15	0	0	4	13	0	0	0	0	2	1	14	15	5	6	41	1.1	Februar
März	5.7	4.5	4.0	4.7	13.3	13	12	6	12	0	0	5	6	0	0	22	13	1	1	4	7	4	6	35	1.3	März
April	4.0	4.3	2.6	3.6	24.1	11	10	5	10	0	0	10	2	0	0	11	1	0	5	8	5	11	6	43	1.0	April
Mai	6.8	5.9	5.6	6.1	63.3	16	16	10	3	0	0	6	11	0	0	6	6	17	12	20	1	1	2	28	1.2	Mai
Juni	4.8	5.2	4.4	4.8	57.0	7	7	7	0	0	0	5	3	0	0	20	3	15	1	5	0	19	6	21	1.5	Juni
Juli	4.9	4.9	4.5	4.8	133.0	9	9	9	0	0	0	7	8	0	0	7	6	3	0	15	0	10	4	48	0.7	Juli
August . . .	7.0	6.6	6.6	6.7	80.3	20	20	19	0	0	0	1	11	0	0	23	0	0	10	30	3	3	0	24	1.1	August
September .	7.4	6.8	5.6	6.6	82.1	12	12	11	0	0	0	1	10	0	0	15	8	0	0	17	5	1	4	40	1.1	September
Oktober . .	4.6	4.8	4.9	4.8	68.4	11	10	9	4	0	0	7	9	0	0	24	0	9	0	13	0	6	20	21	1.4	Oktober
November .	5.6	5.7	5.3	5.5	27.6	10	10	6	10	0	0	4	12	0	0	16	5	12	6	3	0	0	5	43	0.7	November
December .	5.2	5.3	5.5	5.3	29.1	10	10	6	10	0	0	6	11	0	0	14	3	18	5	1	0	3	3	46	0.8	December
Jahr	5.7	5.4	4.9	5.3	681.1	144	140	104	73	0	1	64	101	0	0	167	51	79	44	135	38	67	64	450	1.1	Jahr

Rena.

H = 224 m, H_b = 225.2 m h_t = 1.5 m h_r = 1.1 m

Monat.	I	II	III	Mittel.	Niederschlag. Summe.	Niederschlag.	≥ 0.1 mm.	≥ 1.0 mm.	Schnee. ≥ 0.1 mm.	Hagel.	Nebel.	Heiter.	Trübe.	Gewitter.	Sturm.	N	NE	E	SE	S	SW	W	NW	C	Windstärke. Mittel.	Monat.
Januar . . .	6.9	6.6	5.2	6.2	41.4	6	6	6	6	0	0	6	12	0	0	6	1	0	0	10	4	1	0	71	0.5	Januar
Februar . .	7.2	6.8	5.9	6.6	47.7	15	15	11	12	0	0	3	15	0	0	6	0	0	0	6	10	1	0	61	0.7	Februar
März	6.0	4.7	6.0	5.6	27.5	13	12	7	12	0	0	5	8	0	0	24	2	0	2	11	5	2	0	47	1.1	März
April	5.6	5.6	4.8	5.3	41.9	9	9	7	5	0	0	6	7	0	0	10	2	0	0	18	4	2	0	54	0.9	April
Mai	7.0	7.0	6.2	6.7	106.7	14	14	14	0	0	0	4	14	1	0	12	1	3	0	18	5	0	0	54	0.9	Mai
Juni	5.2	6.0	5.7	5.6	30.1	9	9	6	0	1	0	5	10	0	0	40	7	4	0	9	6	1	0	23	1.8	Juni
Juli	5.2	5.4	5.4	5.3	93.7	15	13	11	0	0	0	6	8	7	0	9	2	1	0	26	9	2	0	44	1.0	Juli
August . . .	7.2	7.4	7.1	7.2	84.9	20	20	14	0	0	1	1	13	0	0	15	1	2	0	18	2	0	0	55	0.7	August
September .	7.7	6.7	6.7	7.0	65.7	15	15	10	0	0	4	2	11	2	0	5	1	0	1	16	4	0	0	63	0.6	September
Oktober . .	6.0	5.6	4.8	5.5	56.4	11	11	9	2	0	3	6	11	0	0	18	0	0	0	4	4	3	1	63	0.5	Oktober
November .	6.6	6.0	5.0	5.9	48.6	9	8	8	8	0	4	9	13	0	0	9	0	0	0	1	8	0	1	71	0.3	November
December .	7.1	5.8	4.8	5.9	63.1	11	10	8	10	0	3	7	12	0	0	10	0	0	0	0	1	0	0	82	0.2	December
Jahr	6.5	6.1	5.6	6.1	707.7	147	142	111	55	1	15	60	134	10	0	164	17	10	3	137	62	12	2	688	0.8	Jahr

1925.

Hamar.

$\lambda = 11^0\ 4'\ E = 44^m\ 16^s$ $\varphi = 60^0\ 48'\ N$ $C_g = 1.35$ mb bei 1013 mb

Monat.	Luftdruck. (Normalschwere). Mittel.	Luft-Temperatur. Min.	I	II	III	Mittel.	beobachtetes Max.	Dat.	Min.	Dat.	Absolute Feuchtigkeit. I	II	III	Mittel.	Relat. Feuchtigk. I	II	III	Mittel	Monat.
Januar	995.2	-6.5	-4.1	-2.0	-2.9	-3.3	6.9	16	-15.1	28	3.5	3.7	3.4	3.5	88	86	86	87	Januar
Februar . . .	85.4	-5.9	-3.1	0.0	-1.4	-2.0	6.1	5	-15.3	21	3.4	3.9	3.7	3.7	87	80	82	84	Februar
März	95.6	-9.0	-6.1	0.3	-2.3	-3.6	8.9	31	-17.8	14	2.8	3.4	3.0	3.0	84	69	70	76	März
April	93.6	-1.8	1.4	7.5	5.6	3.2	11.1	29	-11.7	2	4.3	5.1	4.5	4.5	83	66	66	75	April
Mai	96.8	4.7	7.4	11.6	11.4	8.6	20.3	19	-1.1	1	6.5	7.3	7.1	6.9	84	72	71	79	Mai
Juni	95.1	9.2	13.4	18.1	17.7	14.4	27.3	10	5.1	3	8.2	9.1	8.7	8.6	72	60	59	68	Juni
Juli	97.1	12.9	17.4	22.8	20.9	18.3	29.7	23	8.9	11	11.9	13.2	12.3	12.4	81	65	68	77	Juli
August	92.7	11.2	13.8	18.3	16.4	14.9	22.6	9	5.4	31	9.8	11.2	10.3	10.3	84	72	75	80	August
September . .	89.7	5.4	8.0	13.1	9.9	9.2	16.7	2	1.1	14	7.0	8.4	7.5	7.5	87	75	81	83	September
Oktober . . .	90.7	-0.9	1.3	6.1	3.3	3.0	18.4	1	-11.7	19	4.4	5.1	4.6	4.7	85	73	76	79	Oktober
November . .	95.4	-9.3	-6.9	-4.1	-6.1	-6.0	5.5	19	-18.2	30	2.9	3.2	2.9	3.0	93	88	90	91	November
December . .	84.3	-15.8	-11.8	-10.0	-10.9	-11.1	2.8	30	-25.4	16	2.2	2.3	2.2	2.2	91	89	89	90	December
Jahr	992.6	-0.5	2.6	6.8	5.1	3.8	29.7		-25.4		5.6	6.3	5.8	5.9	85	75	76	81	Jahr

Kutjern.

$\lambda = 10^0\ 33'\ E = 42^m\ 12^s$ $\varphi = 60^0\ 34'\ N$ $C_g = 1.25$ mb bei 1011 mb

Januar	951.8	-6.9	-4.0	-2.2	-3.7	-3.6	5.3	16	-15.4	28	2.9	3.2	2.9	3.0	79	78	78	78	Januar
Februar . . .	42.2	-7.7	-5.2	-2.0	-3.8	-4.2	2.9	5	-19.0	21	2.8	3.1	2.9	2.9	81	74	78	79	Februar
März	51.9	-11.1	-7.4	-1.9	-5.3	-5.8	6.1	19	-21.8	14	2.4	2.6	2.3	2.3	78	59	65	70	März
April	51.1	-3.9	0.5	5.6	3.4	1.4	13.0	11	-12.4	2	3.5	3.6	3.4	3.4	72	53	57	65	April
Mai	54.6	2.1	5.7	9.1	8.8	6.3	20.0	20	-4.5	1	5.3	5.7	5.5	5.4	76	64	65	72	Mai
Juni	54.0	6.5	11.9	16.0	15.8	12.3	28.3	10	1.7	3	6.4	6.5	6.5	6.4	61	49	50	58	Juni
Juli	56.4	10.9	16.2	20.0	19.1	16.4	28.2	23	4.7	11	9.4	9.0	9.1	9.1	69	53	56	65	Juli
August	51.9	8.6	11.4	15.0	13.8	12.2	20.4	7	1.5	16	8.0	8.0	8.0	7.9	79	63	68	74	August
September . .	48.4	3.4	5.9	10.8	7.8	7.2	15.8	16	-1.0	12	5.9	6.1	6.0	5.9	85	63	75	78	September
Oktober . . .	48.6	-3.0	-0.5	4.2	1.3	1.0	16.5	1	-14.0	20	3.7	3.9	3.5	3.7	78	62	69	71	Oktober
November . .	51.9	-9.8	-7.4	-5.0	-7.2	-6.8	4.6	19	-22.2	30	2.6	2.8	2.5	2.6	83	79	82	82	November
December . .	40.5	-15.3	-11.0	-8.6	-10.9	-10.5	2.1	6	-26.0	16	2.1	2.3	2.1	2.2	83	82	82	83	December
Jahr	950.3	-2.2	1.3	5.1	3.3	2.2	28.3		-26.0		4.6	4.7	4.6	4.6	77	65	69	73	Jahr

Flisen.

$\lambda = 12^0\ 1'\ E = 48^m\ 4^s$ $\varphi = 60^0\ 37'\ N$

Januar		-7.3	-4.2	-2.0	-2.2	-3.0	4.3	16	-17.1	27	3.2	3.6	3.5	3.4	88	85	85	86	Januar
Februar . . .		-7.2	-3.7	-0.4	-1.6	-2.4	4.8	6	-18.3	21	3.2	3.5	3.4	3.4	85	75	79	81	Februar
März		-12.3	-7.9	-0.3	-3.1	-4.9	8.4	31	-23.1	15	2.3	2.9	2.6	2.5	79	61	64	70	März
April		-3.0	0.9	8.1	4.8	2.9	14.6	11	-16.3	2	3.7	4.3	3.9	3.9	74	54	59	67	April
Mai		3.8	7.7	12.4	10.9	8.6	22.2	20	-3.2	1	6.1	6.5	6.3	6.2	76	62	64	73	Mai
Juni		8.0	13.2	18.5	16.6	14.0	28.0	10	2.0	5	7.0	7.6	6.8	7.0	62	49	50	59	Juni
Juli		11.1	17.7	23.0	19.8	17.7	29.9	22	7.4	3	10.7	11.2	10.2	10.6	71	55	60	68	Juli
August		8.5	12.9	17.7	14.6	13.6	22.2	8	0.6	31	9.0	9.6	8.7	9.0	82	64	71	78	August
September . .		3.3	7.2	13.3	9.0	8.7	18.2	16	-1.8	12	6.6	7.4	7.0	6.9	85	65	80	80	September
Oktober . . .		-3.3	-0.1	5.9	2.2	2.0	17.5	2	-16.3	19	3.9	4.4	4.1	4.0	82	62	74	75	Oktober
November . .		-13.5	-10.2	-6.5	-7.9	-8.6	3.6	19	-24.7	30	2.4	2.8	2.6	2.6	90	85	89	89	November
December . .		-20.7	-14.5	12.3	-13.9	-14.0	4.1	6	-32.7	16	1.8	2.0	1.8	1.9	89	85	86	87	December
Jahr		-2.7	1.6	6.4	4.1	2.9	29.9		-32.7		5.0	5.5	5.1	5.1	80	67	72	76	Jahr

Aabogen.

$\lambda = 12^0\ 7'\ E = 48^m\ 28^s$ $\varphi = 60^0\ 7'\ N$ $C_g = 1.25$ mb bei 987 mb

Januar	995.3	-5.6	-3.1	-0.6	-1.5	-1.9	5.0	16	-14.0	27	3.6	4.0	3.9	3.8	92	88	90	90	Januar
Februar . . .	85.4	-5.3	-2.6	0.6	-1.0	-1.4	6.0	11	-16.5	21	3.6	4.0	3.8	3.8	89	80	85	86	Februar
März	94.7	-11.5	-7.0	0.0	-3.9	-4.6	8.0	19	-22.3	15	2.7	3.2	3.0	2.9	87	67	78	81	März
April	93.0	-2.4	2.5	8.2	4.3	3.3	13.4	11	-12.2	2	4.5	4.6	4.4	4.4	81	56	70	77	April
Mai	96.1	4.5	8.9	12.8	11.0	9.2	22.3	20	-3.0	2	6.8	7.3	7.2	7.0	79	67	74	79	Mai
Juni	94.1	8.2	14.0	18.4	17.1	14.3	27.8	10	2.3	5	8.2	8.3	7.8	8.0	69	54	55	66	Juni
Juli	96.3	11.0	18.2	22.4	20.5	18.0	30.0	23	6.8	3	11.5	11.4	11.3	11.3	75	57	64	73	Juli
August	92.1	9.3	13.7	17.4	15.2	14.0	21.4	7	2.1	31	9.7	9.7	10.0	9.7	83	67	79	82	August
September . .	89.3	4.6	8.3	13.0	8.7	8.9	17.2	15	1.0	14	7.3	7.1	7.5	7.2	88	64	88	84	September
Oktober . . .	90.1	-2.6	0.4	6.1	1.8	2.2	17.0	2	-13.2	21	4.4	4.9	4.7	4.6	90	69	86	85	Oktober
November . .	94.6	-11.3	-7.9	-4.7	-7.3	-7.0	4.8	19	-24.0	30	2.6	3.1	2.7	2.8	91	87	92	90	November
December . .	83.6	-19.6	-14.4	-11.6	-13.6	-13.6	4.0	30	-30.6	2	1.8	2.1	1.9	1.9	89	90	89	89	December
Jahr	992.0	-1.7	2.6	6.8	4.3	3.4	30.0		-30.6		5.6	5.8	5.7	5.6	84	70	79	82	Jahr

1925.

Hamar.

$H = 138\,m$, $H_b = 140.2\,m$ — $h_t = 1.4\,m$ — $h_r = 1.0\,m$

Monat.	Bewölkung. I	II	III	Mittel.	Niederschlag, Summe.	Zahl der Tage mit: Niederschlag.	≥ 0.1 mm.	≥ 1.0 mm.	Schnee, ≥ 0.1 mm.	Hagel.	Nebel.	Heiter.	Trübe.	Gewitter.	Sturm.	Windverteilung: N	NE	E	SE	S	SW	W	NW	C	Windstärke, Mittel.	Monat.
Januar . . .	4.9	6.1	4.0	5.0	20.6	7	7	5	6	0	1	8	7	0	0	1	10	28	3	10	4	13	15	9	1.3	Januar
Februar . .	7.0	6.8	5.1	6.3	19.4	15	14	7	9	0	2	5	10	0	1	7	11	20	5	10	4	8	10	9	1.7	Februar
März	5.7	4.9	4.7	5.1	13.2	11	9	6	9	0	1	4	7	0	0	10	12	16	3	11	6	11	7	17	1.4	März
April	5.0	5.1	4.4	4.8	23.9	12	9	8	2	2	0	7	8	0	0	6	7	14	6	14	5	18	3	17	1.3	April
Mai	6.8	6.3	5.8	6.3	64.4	16	16	10	0	0	1	6	14	0	0	3	5	14	6	20	17	14	2	12	1.6	Mai
Juni	4.7	5.3	4.9	5.0	32.6	12	8	5	0	0	0	5	4	2	0	8	6	14	1	9	18	24	6	4	2.2	Juni
Juli.	5.1	5.2	5.3	5.2	118.5	12	11	11	0	0	0	6	8	5	0	5	2	12	6	19	18	10	5	16	1.7	Juli
August. . .	6.6	6.5	6.2	6.4	138.2	21	20	16	0	0	0	1	11	0	0	4	4	17	7	19	7	15	7	13	1.5	August
September .	7.6	5.9	6.4	6.6	41.5	19	16	10	0	0	2	0	13	1	0	6	8	14	5	11	7	15	5	19	1.5	September
Oktober . .	5.1	5.2	4.3	4.9	37.6	8	7	7	2	0	0	10	7	0	0	8	9	23	3	7	3	12	17	11	1.6	Oktober
November .	6.7	6.0	7.0	6.6	41.3	12	10	7	10	0	3	2	12	0	0	4	14	24	1	0	0	8	19	20	1.0	November
December .	6.7	6.4	5.6	6.2	41.4	11	11	7	11	0	7	4	10	0	0	5	14	20	2	2	2	11	8	29	0.9	December
Jahr	6.0	5.8	5.3	5.7	592.6	156	138	99	49	2	17	58	111	8	1	67	102	216	48	132	91	159	104	176	1.5	Jahr

Kutjern.

$H = 494\,m$, $H_b = 495.5\,m$ — $h_t = 2.0\,m$ — $h_r = 1.6\,m$

Monat.	I	II	III	Mittel.	Niederschlag, Summe.	Niederschlag.	≥ 0.1 mm.	≥ 1.0 mm.	Schnee, ≥ 0.1 mm.	Hagel.	Nebel.	Heiter.	Trübe.	Gewitter.	Sturm.	N	NE	E	SE	S	SW	W	NW	C	Windstärke, Mittel.	Monat.
Januar . . .	5.2	6.7	4.2	5.4	28.1	9	8	6	7	0	7	7	7	0	0	10	3	0	2	31	35	1	3	8	1.7	Januar
Februar . .	7.1	7.2	6.8	7.1	49.6	15	14	10	12	0	4	4	16	0	0	14	10	4	0	21	28	0	1	6	2.3	Februar
März	6.3	5.4	6.0	5.9	34.9	19	14	9	14	0	1	3	7	0	0	22	20	1	0	19	9	3	2	17	1.6	März
April	6.2	6.7	5.6	6.2	42.7	13	11	8	8	1	2	5	10	0	0	13	7	0	0	24	12	4	3	27	1.3	April
Mai	7.5	7.2	6.8	7.2	88.4	17	16	14	5	0	6	4	17	0	0	20	16	3	3	16	25	1	2	7	1.8	Mai
Juni	5.9	6.7	6.5	6.4	56.0	15	8	7	0	0	0	2	8	0	0	24	22	1	1	11	23	1	5	2	2.4	Juni
Juli.	5.5	6.6	6.7	6.3	106.4	13	11	10	0	0	0	1	9	0	0	18	15	2	6	11	32	2	1	6	1.9	Juli
August. . .	7.5	7.7	7.1	7.4	80.6	23	22	17	0	0	3	1	12	0	0	22	8	0	1	13	27	0	9	13	2.0	August
September .	8.0	7.1	6.5	7.2	58.9	16	15	10	0	0	4	1	10	0	0	15	9	3	2	15	22	2	7	15	1.8	September
Oktober . .	6.3	6.8	5.7	6.3	60.1	14	11	9	3	0	5	2	12	0	0	29	6	1	3	15	21	5	11	2	1.9	Oktober
November .	6.8	6.3	5.9	6.3	47.6	11	9	6	9	0	8	5	12	0	0	28	9	0	2	15	20	2	2	12	1.4	November
December .	5.6	5.7	4.9	5.4	60.6	11	11	9	11	0	3	9	12	0	0	27	12	1	2	20	17	0	4	10	1.4	December
Jahr	6.5	6.7	6.1	6.4	713.9	176	150	115	69	1	43	44	132	0	0	242	137	16	22	211	271	21	50	125	1.8	Jahr

Flisen.

$H = 176\,m$ — $h_t = 1.7\,m$ — $h_r = 1.0\,m$

Monat.	I	II	III	Mittel.	Niederschlag, Summe.	Niederschlag.	≥ 0.1 mm.	≥ 1.0 mm.	Schnee, ≥ 0.1 mm.	Hagel.	Nebel.	Heiter.	Trübe.	Gewitter.	Sturm.	N	NE	E	SE	S	SW	W	NW	C	Windstärke, Mittel.	Monat.
Januar . . .	7.0	7.0	5.3	6.4	29.0	10	8	6	6	0	4	6	12	0	0	5	0	0	0	27	2	6	0	53	0.8	Januar
Februar . .	7.8	7.7	7.1	7.5	32.9	13	13	8	9	0	2	3	18	0	0	14	1	2	0	27	2	3	1	34	1.4	Februar
März	6.0	6.5	5.5	6.0	25.4	16	10	7	10	0	2	4	10	0	0	24	0	0	0	15	1	6	8	39	1.3	März
April	4.9	6.2	4.9	5.3	34.8	12	11	10	4	1	1	9	6	0	0	17	1	0	0	21	5	6	5	35	1.2	April
Mai	6.6	7.4	6.6	6.9	123.1	17	17	14	1	0	1	5	15	2	0	13	2	0	1	32	5	2	3	35	1.2	Mai
Juni	4.6	6.4	5.6	5.5	30.1	11	9	7	0	0	0	5	7	0	0	21	4	1	1	15	1	14	14	19	1.7	Juni
Juli.	4.8	6.2	6.2	5.7	73.5	12	11	9	0	0	0	3	10	10	0	8	3	1	0	28	2	8	3	40	0.9	Juli
August. . .	6.8	7.1	6.3	6.7	66.5	19	19	12	0	0	0	1	12	1	0	8	2	0	0	25	2	11	4	41	0.9	August
September .	8.2	7.7	6.7	7.5	44.2	17	17	13	0	0	3	0	13	0	0	4	0	1	2	23	4	4	2	50	0.9	September
Oktober . .	5.8	6.8	5.0	5.9	54.6	11	9	8	2	0	5	5	11	0	0	8	0	0	0	18	1	7	10	49	1.0	Oktober
November .	7.1	6.4	6.1	6.5	41.3	12	11	8	11	0	5	4	15	0	0	11	0	0	0	5	1	2	3	68	0.3	November
December .	6.9	5.7	5.0	5.9	43.9	14	14	7	14	0	4	7	12	0	0	12	2	1	1	7	1	4	3	62	0.6	December
Jahr	6.4	6.8	5.9	6.3	599.3	164	149	109	57	1	27	52	141	13	0	145	15	6	5	243	27	73	56	525	1.0	Jahr

Aabogen.

$H = 145\,m$, $H_b = 146.7\,m$ — $h_t = 1.4\,m$ — $h_r = 1.3\,m$

Monat.	I	II	III	Mittel.	Niederschlag, Summe.	Niederschlag.	≥ 0.1 mm.	≥ 1.0 mm.	Schnee, ≥ 0.1 mm.	Hagel.	Nebel.	Heiter.	Trübe.	Gewitter.	Sturm.	N	NE	E	SE	S	SW	W	NW	C	Windstärke, Mittel.	Monat.
Januar . . .	5.6	7.0	4.0	5.5	44.8	9	8	8	4	0	0	6	8	0	0	8	1	0	3	22	4	9	17	29	1.1	Januar
Februar . .	6.5	6.6	6.4	6.5	50.6	12	12	11	8	0	0	5	12	0	0	12	1	4	11	19	5	7	7	18	1.3	Februar
März	5.8	4.8	4.2	4.9	31.3	13	12	9	12	0	0	8	6	0	0	25	2	0	10	7	5	4	12	28	1.2	März
April	5.1	4.4	4.6	4.7	42.5	10	10	8	2	0	0	9	6	0	0	17	1	0	1	27	2	5	12	25	1.2	April
Mai	7.3	6.9	6.2	6.8	125.6	14	14	13	0	0	0	4	16	0	0	11	0	0	6	45	4	4	5	18	1.3	Mai
Juni	4.5	5.7	4.5	4.9	46.7	9	9	9	0	0	0	6	5	0	0	26	0	0	1	9	10	7	21	16	1.7	Juni
Juli.	4.5	5.9	4.5	5.0	113.4	8	8	8	0	0	0	4	3	0	0	10	0	1	10	16	8	4	11	33	1.0	Juli
August. . .	6.2	5.9	4.8	5.6	53.2	13	12	11	0	0	0	2	6	0	0	10	1	0	7	29	4	3	19	20	1.3	August
September .	6.7	5.6	4.5	5.6	40.5	9	9	8	0	0	0	1	7	0	0	24	1	1	6	17	6	4	6	25	1.4	September
Oktober . .	5.4	5.3	4.3	5.0	43.4	12	8	8	2	0	0	8	9	0	0	25	1	0	8	16	3	5	7	28	1.2	Oktober
November .	6.7	5.0	5.9	5.9	53.6	8	7	6	7	0	0	5	12	0	0	28	0	2	9	3	0	1	14	33	0.8	November
December .	6.4	5.3	4.3	5.3	54.4	11	10	9	10	0	0	7	10	0	0	30	0	0	3	14	2	1	12	31	0.8	December
Jahr	5.9	5.7	4.8	5.5	700.0	128	119	108	45	0	0	65	100	0	0	226	8	8	75	224	53	54	143	304	1.2	Jahr

Kjeller.

$\lambda = 11^0\ 2'\,E = 44^m\ 8^s$ $\varphi = 59^0\ 58'\,N$

Monat.	Luftdruck. (Normalschwere). Mittel.	Luft-Temperatur. Min.	I	II	III	Mittel.	beobachtetes Max.	Dat.	Min.	Dat.	Absolute Feuchtigkeit. I	II	III	Mittel.	Relat. Feuchtigk. I	II	III	Mittel.	Monat.
Januar		-5.0	-2.6	0.2	-0.9	-1.4	6.4	11	-14.5	27	3.6	4.0	3.8	3.8	87	83	83	85	Januar
Februar		-4.7	-2.3	1.3	-0.7	-1.1	5.6	12	-13.9	21	3.5	4.0	3.9	3.8	84	77	84	82	Februar
März		-11.5	-7.0	1.8	-3.1	-4.0	8.6	18	-22.0	14	2.5	3.3	2.8	2.8	78	62	72	73	März
April		-2.0	2.9	10.0	5.7	4.3	17.2	12	-16.8	2	4.4	5.0	4.8	4.6	77	53	69	74	April
Mai		4.0	8.6	12.7	11.0	9.0	23.4	20	-2.5	1	6.4	7.0	6.8	6.6	76	64	69	76	Mai
Juni		7.9	14.5	19.6	17.4	14.7	29.7	10	3.2	19	7.9	8.5	7.7	7.9	64	51	53	62	Juni
Juli		10.5	18.5	23.8	20.4	18.1	32.0	22	5.8	3	11.3	11.1	10.6	10.9	72	52	61	70	Juli
August		8.7	14.6	19.0	16.3	14.6	25.0	7	3.2	31	9.7	10.0	9.2	9.5	78	62	67	73	August
September		4.0	8.4	14.6	10.4	9.5	19.8	15	-2.1	13	6.9	7.7	6.6	7.0	83	62	70	74	September
Oktober		-1.8	1.5	7.9	4.3	3.7	20.3	2	-12.9	19	4.1	5.1	4.2	4.4	79	62	67	70	Oktober
November		-11.9	-8.2	-3.8	-7.1	-7.0	4.0	20	-20.8	30	2.6	3.2	2.8	2.9	91	86	90	90	November
December		-19.5	-13.6	-11.6	-14.4	-13.6	4.2	6	-31.6	20	1.9	2.1	1.8	1.9	88	87	87	88	December
Jahr		-1.8	2.9	8.0	4.9	3.9	32.0		-31.6		5.4	5.9	5.4	5.5	80	67	73	76	Jahr

Oslo. (Kristiania).

$\lambda = 10^0\ 43'\,E = 42^m\ 52^s$ $\varphi = 59^0\ 55'\,N$ $C_g = 1.35$ mb bei 1009 mb

Januar	1010.5	-2.7	-0.9	0.7	0.4	-0.1	7.8	7	-10.3	27	3.9	4.2	3.9	4.0	88	84	82	85	Januar
Februar	1000.0	-2.4	-0.8	2.1	1.0	0.4	7.9	5	-10.3	22	3.7	3.9	4.0	3.9	81	72	78	78	Februar
März	10.2	-5.6	-3.4	2.2	0.3	-1.0	11.2	31	-12.8	15	2.9	3.2	3.1	3.0	74	57	63	67	März
April	07.9	1.1	3.8	10.7	8.0	6.0	18.0	12	-6.1	2	4.5	4.6	4.8	4.5	75	50	61	68	April
Mai	10.6	6.8	9.3	13.4	12.3	10.4	23.8	20	0.1	1	6.9	7.2	7.4	7.1	78	65	71	78	Mai
Juni	08.9	10.8	14.1	19.7	18.6	15.7	30.5	10	7.1	19	7.8	8.4	8.4	8.1	66	50	53	63	Juni
Juli	10.4	15.3	18.6	24.4	22.1	20.0	33.0	22	9.8	11	11.6	11.1	11.4	11.3	72	51	59	70	Juli
August	06.4	13.0	15.0	19.8	17.8	16.3	25.7	7	6.7	31	10.2	10.2	10.2	10.1	79	61	67	74	August
September	03.7	7.6	9.7	15.1	11.7	11.2	19.3	15	3.8	13	7.5	7.9	8.0	7.7	84	62	79	78	September
Oktober	05.1	1.6	3.5	8.5	5.8	5.3	20.3	2	-6.5	19	5.0	5.0	5.1	4.9	79	59	70	72	Oktober
November	09.9	-5.4	-3.8	-1.8	-3.0	-3.1	5.8	20	-14.6	30	3.2	3.4	3.3	3.3	88	82	85	85	November
December	998.6	-10.7	-7.8	-6.3	-7.3	-7.3	4.2	30	-17.8	2	2.5	2.6	2.5	2.5	88	82	84	85	December
Jahr	1006.8	2.4	4.8	9.0	7.3	6.2	33.0		-17.8		5.8	6.0	6.0	5.9	79	65	71	75	Jahr

Asker.

$\lambda = 10^0\ 26'\,E = 41^m\ 44^s$ $\varphi = 59^0\ 51'\,N$

Januar		-4.1	-1.9	0.2	-0.4	-1.0	7.6	11	-10.3	21									Januar
Februar		-4.3	-2.0	0.6	-0.9	-1.2	5.1	5	-11.8	22									Februar
März		-7.5	-4.2	0.1	-2.2	-2.9	9.0	19	-16.3	11									März
April		-0.6	2.7	7.9	5.1	3.9	12.2	12	-10.2	2									April
Mai		5.0	8.7	11.6	11.0	9.0	21.1	20	-1.7	1									Mai
Juni		9.0	14.5	19.3	17.5	14.9	30.1	10	4.3	15									Juni
Juli		12.7	19.2	23.2	21.3	18.9	31.4	23	8.0	11									Juli
August		11.4	14.9	18.6	16.6	15.3	23.1	7	4.7	31									August
September		6.3	9.6	13.7	10.3	10.1	19.1	15	2.4	14									September
Oktober		1.4	3.8	7.6	4.8	4.8	19.6	1	-5.5	20									Oktober
November		-6.8	-4.7	-2.3	-4.2	-4.0	6.8	20	-15.5	30									November
December		-12.4	-8.9	-6.2	-8.3	-8.1	5.7	6	-20.7	20									December
Jahr		0.8	4.3	7.9	5.9	5.0	31.4		-20.7										Jahr

Modum.

$\lambda = 10^0\ 0'\,E = 40^m\ 0^s$ $\varphi = 59^0\ 58'\,N$

Januar		-5.2	-2.7	-0.5	-1.5	-1.9	7.8	11	-14.5	28	3.5	3.9	3.6	3.7	86	82	81	83	Januar
Februar		-4.8	-2.6	0.8	-1.0	-1.4	7.0	5	-15.4	21	3.4	3.7	3.6	3.6	84	74	81	81	Februar
März		-8.8	-5.5	1.1	-1.6	-3.0	10.8	19	-18.4	15	2.7	3.1	2.8	2.8	83	59	63	71	März
April		-2.6	1.8	8.8	6.1	3.6	13.6	12	-10.8	2	4.4	4.8	4.0	4.3	82	55	56	69	April
Mai		3.6	7.7	12.6	11.5	8.7	23.0	20	-2.9	2	6.5	6.9	6.5	6.5	82	63	64	76	Mai
Juni		8.0	14.1	19.3	17.6	14.5	28.9	10	2.1	4	7.4	7.9	7.3	7.4	62	48	50	59	Juni
Juli		12.0	18.5	23.7	21.6	18.8	32.2	22	7.6	1	10.5	10.1	9.5	9.9	67	48	51	62	Juli
August		10.6	14.3	18.6	16.6	15.0	23.5	7	2.4	31	9.7	9.4	8.9	9.2	81	60	64	73	August
September		4.1	7.8	13.4	9.9	9.0	18.4	15	-0.3	25	6.9	7.3	7.1	7.0	87	64	77	79	September
Oktober		-1.2	1.8	7.5	3.6	3.5	19.9	2	-12.7	20	4.3	4.6	4.2	4.4	79	58	68	70	Oktober
November		-9.2	-6.8	-3.4	-5.5	-5.6	8.6	20	-19.1	30	2.9	3.4	3.1	3.1	94	89	92	93	November
December		-15.4	-11.4	-9.0	-10.8	-10.7	3.9	6	-24.1	16	2.2	2.5	2.3	2.3	94	92	93	93	December
Jahr		-0.7	3.1	7.7	5.5	4.2	32.2		-24.1		5.4	5.6	5.2	5.4	82	66	70	76	Jahr

1925.

Kjeller.

H = 109 m h_t = 1.7 m h_r = 1.7 m

Monat.	Bewölkung. I	II	III	Mittel.	Niederschlag. Summe.	Zahl der Tage mit Niederschlag.	≥ 0.1 mm.	≥ 1.0 mm.	≥ 0.1 mm. Schnee.	Hagel.	Nebel.	Heiter.	Trübe.	Gewitter.	Sturm.	Windverteilung. N	NE	E	SE	S	SW	W	NW	C	Windstärke Mittel.	Monat.
Januar . . .	5.4	6.2	4.6	5.4	40.3	8	7	6	4	0	2	6	8	0	0	0	1	0	7	6	17	1	3	58	1.1	Januar
Februar . .	6.5	6.8	7.2	6.8	53.8	13	13	9	8	0	2	4	13	0	0	1	13	4	5	7	17	0	1	36	2.0	Februar
März	4.8	3.4	3.9	4.0	27.1	14	13	7	13	0	2	11	4	0	0	21	3	3	2	4	5	4	2	49	1.6	März
April	4.5	4.9	4.5	4.6	49.6	13	13	8	4	0	1	8	4	0	0	6	8	5	4	7	14	2	0	44	1.7	April
Mai	6.7	6.7	6.0	6.5	102.1	18	16	14	0	0	1	4	15	0	0	15	13	2	10	13	7	0	0	33	1.6	Mai
Juni	4.5	3.7	3.4	3.9	27.7	12	8	7	0	0	2	9	3	0	0	12	6	0	6	9	13	2	16	26	1.7	Juni
Juli	4.5	4.5	4.7	4.6	86.2	12	10	7	0	0	2	9	5	4	0	2	15	2	14	8	6	0	1	45	1.1	Juli
August . . .	7.3	5.6	5.6	6.2	89.8	22	18	12	0	0	2	1	6	0	0	6	12	4	13	6	12	6	7	27	1.5	August
September .	6.5	5.9	5.1	5.8	62.9	11	9	6	0	0	5	1	4	0	0	10	3	2	8	8	16	3	2	38	1.7	September
Oktober . .	5.3	5.9	5.0	5.4	97.2	11	11	10	3	0	3	8	11	0	0	4	8	3	11	5	9	7	16	30	1.7	Oktober
November .	6.9	7.1	6.9	7.0	50.5	10	10	7	10	0	9	4	14	0	0	4	8	3	1	0	2	4	1	67	0.6	November
December .	7.5	5.8	6.5	6.6	78.1	12	12	8	12	0	13	5	12	0	0	1	12	2	6	1	4	0	2	65	0.8	December
Jahr	5.9	5.5	5.3	5.6	765.3	156	140	101	54	0	44	70	99	4	0	82	102	30	87	74	122	29	51	518	1.4	Jahr

Oslo. (Kristiania).

H = 22 m, H_b = 24.9 m h_t = 2.1 m h_r = 2.6 m

Januar . . .	5.8	5.7	4.5	5.3	33.2	10	8	6	3	0	4	7	8	0	0	0	3	4	1	10	8	5	0	62	0.8	Januar
Februar . .	6.4	6.4	6.4	6.4	39.4	14	11	10	7	0	0	6	12	0	0	3	13	10	5	15	10	1	1	26	2.1	Februar
März	5.5	4.2	4.8	4.8	27.1	16	12	5	11	0	2	6	5	0	0	6	19	5	3	12	8	4	1	35	1.5	März
April	4.4	5.0	4.2	4.5	27.9	15	11	6	2	0	1	7	4	0	0	6	6	5	6	19	18	5	3	22	1.7	April
Mai	7.5	6.4	5.6	6.5	98.1	18	17	13	0	0	0	6	15	0	0	2	19	12	11	23	13	0	0	13	1.9	Mai
Juni	5.8	5.1	5.1	5.3	34.2	13	9	7	0	0	0	3	6	1	0	10	16	8	3	25	17	5	3	3	2.1	Juni
Juli	4.4	4.2	4.2	4.3	90.7	12	10	9	0	0	0	9	4	7	0	2	13	10	7	27	21	1	0	12	1.8	Juli
August . . .	6.3	5.4	5.4	5.7	55.0	20	17	8	0	0	0	1	4	6	0	2	13	14	6	27	15	1	3	12	2.1	August
September .	6.5	5.6	4.6	5.6	66.7	17	13	9	0	0	0	4	5	2	0	4	13	8	5	19	14	3	2	22	1.6	September
Oktober . .	5.4	5.2	4.7	5.1	77.6	12	11	8	3	0	1	8	9	0	0	4	15	9	4	12	11	5	4	29	1.8	Oktober
November .	7.3	6.1	6.4	6.6	50.0	15	11	6	10	0	8	4	11	0	0	10	18	12	1	3	2	1	1	42	1.1	November
December .	6.2	5.9	5.8	6.0	60.9	13	12	8	12	0	2	7	12	0	0	4	30	17	3	2	2	4	5	26	1.3	December
Jahr	6.0	5.4	5.1	5.5	660.8	175	142	95	48	0	18	68	95	16	0	53	178	114	55	194	139	35	23	304	1.6	Jahr

Asker.

H = 152 m h_t = 1.7 m h_r = 1.5 m

Januar . . .	5.4	5.3	4.4	5.0	40.6	9	7	6	4	0	1	9	9	0	0	10	8	0	2	6	5	5	8	49	0.8	Januar
Februar . .	8.1	6.9	5.8	6.9	91.2	15	13	12	10	0	0	3	11	0	0	9	4	2	1	8	15	1	7	37	0.8	Februar
März	6.4	4.8	4.5	5.2	31.6	15	9	5	8	0	0	7	8	0	0	26	1	1	2	4	2	0	6	51	0.5	März
April	4.6	4.9	3.9	4.5	34.0	11	9	6	2	0	0	9	4	0	0	11	0	0	14	3	1	0	6	55	0.5	April
Mai	7.3	6.5	5.2	6.3	140.8	15	14	13	0	0	0	7	16	0	0	3	0	3	19	10	3	1	15	39	0.7	Mai
Juni	5.0	5.1	4.2	4.8	29.8	10	8	7	0	0	1	7	5	0	0	6	1	1	12	13	5	5	20	27	1.7	Juni
Juli	4.5	4.4	4.6	4.5	81.8	10	10	10	0	0	0	12	5	1	0	5	0	4	16	19	1	1	7	40	1.0	Juli
August . . .	6.6	5.8	5.5	6.0	46.0	16	15	9	0	0	1	4	7	0	0	10	0	0	12	16	2	0	16	37	1.5	August
September .	6.3	6.1	4.6	5.7	112.7	16	16	8	0	0	3	2	8	0	0	18	3	0	5	8	1	3	17	35	1.6	September
Oktober . .	5.1	5.8	5.0	5.3	111.9	11	10	9	2	0	2	8	11	0	1	22	2	4	4	5	2	5	22	27	2.7	Oktober
November .	6.4	5.8	4.8	5.7	75.5	13	10	6	9	0	5	5	8	0	0	16	0	2	1	0	0	0	25	46	1.9	November
December .	5.7	5.6	4.6	5.3	49.7	11	11	9	11	0	2	10	10	0	0	19	0	0	2	2	0	1	18	51	2.2	December
Jahr	6.0	5.6	4.8	5.4	845.6	152	132	100	46	0	15	83	102	1	1	155	19	17	90	94	37	22	167	494	1.3	Jahr

Modum.

H = 135 m h_t = 1.6 m h_r = 1.2 m

Januar . . .	6.4	6.4	4.4	5.7	23.0	9	8	6	4	0	4	4	8	0	0	10	3	1	-	19	27	3	10	20	0.6	Januar
Februar . .	6.6	6.5	5.6	6.2	53.0	14	13	11	10	0	3	2	12	0	0	12	12	3	3	15	18	1	7	13	1.3	Februar
März	5.6	4.3	4.9	4.9	21.9	12	8	4	8	0	0	8	6	0	0	16	14	3	3	10	15	2	6	24	1.1	März
April	5.1	5.0	4.9	5.0	26.0	11	11	6	3	1	2	8	7	0	0	12	18	10	2	19	14	1	1	13	1.3	April
Mai	7.4	6.4	5.8	6.5	85.1	14	12	12	0	0	4	6	16	0	0	18	15	9	11	19	10	0	1	10	1.4	Mai
Juni	5.4	5.5	5.3	5.4	27.6	13	11	7	0	0	1	5	7	2	0	23	18	10	8	13	8	3	5	2	1.8	Juni
Juli	4.6	4.5	5.2	4.8	73.2	12	8	4	0	1	0	5	6	7	0	10	17	13	7	28	8	1	3	6	1.4	Juli
August . . .	7.0	6.6	6.0	6.5	44.5	23	17	13	0	0	1	2	11	6	0	18	10	7	10	18	7	0	2	21	0.9	August
September .	6.5	6.2	5.4	6.0	84.8	17	17	11	0	0	4	3	9	0	0	8	8	5	7	18	15	3	4	22	1.1	September
Oktober . .	5.5	5.8	5.2	5.5	60.3	11	11	8	4	0	4	7	11	0	0	15	5	3	2	9	18	5	17	19	0.9	Oktober
November .	7.0	6.4	6.2	6.5	39.7	13	13	5	12	0	7	4	12	0	0	24	3	1	1	6	9	4	19	23	0.4	November
December .	6.9	6.9	5.8	6.5	84.5	15	14	10	14	0	8	7	15	0	0	30	4	1	1	6	5	3	17	26	0.3	December
Jahr	6.2	5.9	5.4	5.8	623.6	164	143	97	55	2	38	61	120	15	0	196	127	66	55	180	154	26	92	199	1.0	Jahr

Nes.

$\lambda = 9^0\ 6'$ E $= 36^m\ 24^s$ $\varphi = 60^0\ 35'$ N

Monat.	Luftdruck. Normalschwere. Mittel.	Luft-Temperatur. Min.	I	II	III	Mittel.	beobachtetes Max.	Dat.	Min.	Dat.	Absolute Feuchtigkeit. I	II	III	Mittel.	Relat. Feuchtigk. I	II	III	Mittel.	Monat.
Januar		-9.0	-5.4	-3.4	-4.1	-4.7	10.0	16	-19.3	29									Januar
Februar		-9.0	-5.6	-1.1	-3.2	-3.9	6.2	5	-21.1	21									Februar
März		-11.2	-7.7	1.3	-1.6	-4.1	9.5	30	-21.6	14									März
April		-3.6	0.2	9.2	5.6	2.9	13.6	12	-9.6	2									April
Mai		2.8	7.3	13.4	11.6	8.5	23.1	20	-3.3	2									Mai
Juni		7.2	13.4	19.9	18.2	14.4	30.5	10	1.9	3									Juni
Juli		10.8	16.6	23.3	21.3	17.7	31.0	22	5.0	11									Juli
August		9.6	12.8	18.6	16.3	14.2	25.3	8	1.4	16									August
September		2.8	5.4	13.4	9.8	8.0	17.3	15	-1.6	14									September
Oktober		-3.0	-0.1	5.7	2.3	1.8	17.3	1	-13.7	19									Oktober
November		-11.5	-8.7	-5.7	-7.4	-7.6	10.1	20	-21.3	11									November
December		-20.2	-15.5	-13.5	-14.9	-14.9	4.0	6	-31.3	16									December
Jahr		-2.9	1.1	6.8	4.5	2.7	31.0		-31.3										Jahr

Nygaard.

$\lambda = 7^0\ 50'$ E $= 31^m\ 20^s$ $\varphi = 60^0\ 31'$ N

Monat.	Luftdruck. Normalschwere. Mittel.	Luft-Temperatur. Min.	I	II	III	Mittel.	beobachtetes Max.	Dat.	Min.	Dat.	Absolute Feuchtigkeit. I	II	III	Mittel.	Relat. Feuchtigk. I	II	III	Mittel.	Monat.
Januar		-8.6	-5.6	-4.1	-5.2	-5.2	2.9	18	-18.9	28									Januar
Februar		-10.4	-7.4	-5.5	-7.2	-7.0	-0.5	12	-24.5	20									Februar
März		-12.9	-9.4	-6.0	-8.3	-8.7	1.5	30	-25.1	11									März
April		-8.9	-5.6	0.4	-2.3	-3.9	4.0	16	-12.3	2									April
Mai		-0.9	2.4	5.2	3.7	2.5	11.3	20	-8.9	2									Mai
Juni		3.3	7.9	12.0	10.0	8.1	21.2	10	-0.4	4									Juni
Juli		9.9	14.1	17.7	15.8	14.3	24.2	21	3.3	9									Juli
August		7.3	8.5	12.2	9.6	9.4	17.8	8	3.3	16									August
September		2.1	3.8	7.4	4.8	4.7	13.0	16	-1.3	28									September
Oktober		-3.9	-1.8	0.3	-1.2	-1.3	7.7	2	-13.3	19									Oktober
November		-10.2	-7.4	-5.8	-7.4	-7.2	4.3	21	-23.4	9									November
December		-13.9	-9.5	-9.2	-10.7	-10.0	-0.1	30	-24.8	15									December
Jahr		-3.9	-0.8	2.0	0.1	-0.4	24.2		-25.1										Jahr

Aasberg.

$\lambda = 8^0\ 26'$ E $= 33^m\ 44^s$ $\varphi = 60^0\ 25'$ N

Monat.	Luftdruck. Normalschwere. Mittel.	Luft-Temperatur. Min.	I	II	III	Mittel.	beobachtetes Max.	Dat.	Min.	Dat.	Absolute Feuchtigkeit. I	II	III	Mittel.	Relat. Feuchtigk. I	II	III	Mittel.	Monat.
Januar		-6.8	-4.2	-2.4	-3.7	-3.7	4.6	18	-15.3	28	2.7	2.8	2.7	2.7	73	69	70	71	Januar
Februar		-9.4	-6.9	-4.1	-5.9	-6.0	0.2	17	-19.0	20	2.7	2.9	2.7	2.8	85	79	84	84	Februar
März		-11.6	-8.2	-3.8	-6.6	-7.1	2.6	30	-23.3	9	2.2	2.5	2.3	2.2	75	64	72	72	März
April		-6.3	-2.8	2.4	0.2	-1.5	6.8	10	-10.5	2	3.0	3.5	3.3	3.2	73	61	67	70	April
Mai		0.1	3.8	7.4	6.0	4.1	17.0	20	-6.3	2	4.8	5.3	4.7	4.8	78	68	66	74	Mai
Juni		4.0	9.5	14.4	11.5	9.6	25.4	10	-0.6	4	6.1	6.1	5.2	5.7	68	50	51	63	Juni
Juli		9.1	14.1	18.3	15.9	14.1	26.4	23	3.2	10	8.7	7.8	7.4	7.9	73	51	56	68	Juli
August		7.0	9.9	13.7	10.6	10.3	19.4	8	1.5	16	7.5	7.3	7.2	7.2	82	62	74	79	August
September		1.6	4.4	8.6	5.4	5.2	13.2	16	-3.0	27	5.4	5.6	5.2	5.3	85	67	77	79	September
Oktober		-3.5	-1.4	1.6	-0.9	-0.7	10.2	1	-12.9	19	3.6	3.6	3.6	3.6	81	68	79	78	Oktober
November		-9.8	-7.2	-5.2	-6.6	-6.6	5.0	20	-22.4	8	2.5	2.6	2.6	2.6	82	78	81	81	November
December		-13.0	-9.3	-8.2	-9.9	-9.3	0.0	6	-24.2	15	2.2	2.2	2.1	2.2	83	78	80	81	December
Jahr		-3.2	0.1	3.6	1.3	0.7	26.4		-24.2		4.3	4.4	4.1	4.2	78	66	71	75	Jahr

Veggli.

$\lambda = 9^0\ 10'$ E $= 36^m\ 40^s$ $\varphi = 60^0\ 3'$ N

Monat.	Luftdruck. Normalschwere. Mittel.	Luft-Temperatur. Min.	I	II	III	Mittel.	beobachtetes Max.	Dat.	Min.	Dat.	Absolute Feuchtigkeit. I	II	III	Mittel.	Relat. Feuchtigk. I	II	III	Mittel.	Monat.
Januar		-7.2	-3.7	-1.2	-3.2	-3.1	9.8	11	-16.2	28	2.9	3.1	3.0	3.0	77	69	76	75	Januar
Februar		-6.7	-3.9	0.0	-2.5	-2.6	5.7	5	-18.3	21	3.0	3.4	3.2	3.2	79	69	77	76	Februar
März		-10.2	-6.1	1.1	-3.7	-4.1	8.0	19	-22.9	14	2.4	2.9	2.6	2.5	72	56	66	67	März
April		-3.8	2.3	8.2	2.9	2.5	13.1	11	-13.7	2	3.5	3.7	3.4	3.4	62	45	59	61	April
Mai		1.9	8.4	12.7	9.7	7.9	23.2	20	-4.3	1	5.7	6.1	5.7	5.7	68	56	63	68	Mai
Juni		5.6	13.6	19.2	14.4	12.9	29.8	10	0.1	3	6.4	7.2	7.1	6.8	55	44	58	62	Juni
Juli		9.0	16.5	23.0	19.3	16.6	31.0	21	1.9	11	8.6	9.4	9.0	8.9	62	46	55	62	Juli
August		8.8	13.5	17.9	14.0	13.5	23.4	8	0.5	16	8.5	9.0	8.9	8.7	74	60	75	75	August
September		2.4	7.3	12.8	7.0	7.5	18.6	15	-2.6	27	5.9	6.9	5.7	6.1	76	62	75	74	September
Oktober		-3.5	0.4	5.8	1.7	1.5	17.0	2	-13.6	19	3.6	4.1	3.8	3.8	74	59	70	69	Oktober
November		-10.0	-6.8	-3.0	-5.9	-5.6	10.3	21	-21.8	30	2.5	3.0	2.5	2.7	80	76	78	78	November
December		-16.4	-11.8	-9.5	-11.3	-11.2	2.2	4	-25.5	16	2.0	2.1	2.0	2.0	81	78	83	81	December
Jahr		-2.5	2.5	7.2	3.5	3.0	31.0		-25.5		4.6	5.1	4.7	4.7	72	60	70	71	Jahr

1925.

Nes.

H = 165 m h_t = 1.4 m h_r = 1.1 m

Monat.	Bewölkung. I	II	III	Mittel.	Niederschlag. Summe.	Zahl der Tage mit Niederschlag.	≥ 0.1 mm.	≥ 1.0 mm.	Schnee. ≥ 0.1 mm.	Hagel.	Nebel.	Heiter.	Trübe	Gewitter	Sturm.	Windverteilung. N	NE	E	SE	S	SW	W	NW	C	Windstärke. Mittel.	Monat.
Januar . . .	4.9	6.9	3.9	5.2	20.7	9	9	5	7	0	6	5	3	0	0	10	5	2	1	11	6	3	7	48	1.1	Januar
Februar . .	7.7	6.9	5.9	6.8	36.4	22	21	14	18	0	4	3	12	0	0	6	5	2	7	8	5	4	6	41	1.2	Februar
März	5.1	5.2	5.4	5.2	1.0	9	6	0	6	0	0	6	6	0	0	26	7	0	4	13	3	9	10	21	1.6	März
April	5.0	6.1	5.9	5.7	17.9	10	5	4	2	0	0	7	8	0	0	18	4	1	5	15	4	6	8	29	1.3	April
Mai	7.4	7.2	6.3	7.0	76.3	16	14	11	0	0	0	3	14	0	0	6	3	2	15	13	10	1	5	38	1.2	Mai
Juni	6.5	7.1	6.0	6.5	43.1	11	8	4	0	0	0	2	13	0	0	19	8	1	4	8	8	2	17	23	1.8	Juni
Juli	5.0	7.4	6.6	6.3	28.7	12	9	5	0	0	1	1	9	4	0	6	6	2	5	12	12	3	15	32	1.3	Juli
August . . .	6.6	7.8	6.9	7.1	44.4	26	23	14	0	1	0	0	11	1	0	12	2	6	8	9	9	3	12	32	1.2	August
September .	7.6	7.3	7.4	7.4	62.3	19	17	11	0	1	10	1	13	0	0	11	2	6	8	4	9	2	8	40	1.1	September
Oktober . .	6.7	7.0	5.6	6.4	52.1	14	11	10	3	0	4	2	11	0	0	14	6	0	3	3	4	3	18	42	1.3	Oktober
November .	7.1	6.7	4.5	6.1	27.3	10	7	4	7	0	6	3	9	0	0	10	1	2	4	0	6	2	13	52	0.8	November
December .	6.3	6.4	4.6	5.8	36.0	16	15	7	15	0	1	6	12	0	0	8	6	2	5	7	6	4	6	49	0.6	December
Jahr	6.3	6.8	5.8	6.3	446.2	174	145	89	58	2	32	39	121	5	0	146	55	26	69	103	82	42	125	447	1.2	Jahr

Nygaard.

H = 996 m h_t = 1.7 m h_r = 1.9 m

Monat.	I	II	III	Mittel.	Niederschlag. Summe.	Niederschlag.	≥ 0.1 mm.	≥ 1.0 mm.	Schnee. ≥ 0.1 mm.	Hagel.	Nebel.	Heiter.	Trübe	Gewitter	Sturm.	N	NE	E	SE	S	SW	W	NW	C	Windstärke. Mittel.	Monat.
Januar . . .	7.2	6.2	5.2	6.2	94.8	18	18	18	17	0	0	5	11	0	5	2	0	0	4	5	11	22	9	40	2.9	Januar
Februar . .	8.1	7.8	6.9	7.6	137.2	20	20	17	20	0	0	4	18	0	1	2	0	0	20	10	5	14	8	25	3.1	Februar
März	5.7	5.4	5.3	5.5	18.6	9	8	5	8	0	0	6	8	0	1	15	0	3	6	0	0	10	20	30	2.5	März
April	4.4	4.6	4.4	4.5	9.9	7	5	4	5	0	0	11	7	0	1	4	0	0	7	10	0	0	11	58	1.4	April
Mai	7.0	6.2	6.7	6.6	55.6	13	13	11	9	0	3	4	14	0	0	0	2	1	20	2	6	6	4	52	1.4	Mai
Juni	5.1	4.8	4.8	4.9	11.1	4	4	2	3	0	0	7	4	0	3	8	0	9	0	0	2	20	14	37	2.4	Juni
Juli	4.5	5.6	5.5	5.2	36.0	8	7	7	0	0	0	7	7	0	0	6	0	10	3	3	4	13	9	45	2.0	Juli
August . . .	6.5	5.8	6.7	6.3	46.9	17	17	14	0	0	0	2	11	0	1	4	4	19	4	12	11	28	11	0	2.1	August
September .	6.8	6.6	7.0	6.8	12.2	13	13	5	5	0	0	3	10	0	0	16	1	11	5	9	7	24	17	0	2.3	September
Oktober . .	6.0	6.0	5.6	5.9	52.6	19	16	12	10	0	1	5	9	0	3	2	0	4	10	9	5	31	27	5	2.6	Oktober
November .	5.1	5.4	5.3	5.3	46.3	20	12	7	10	0	1	4	6	0	1	20	2	9	5	5	2	16	21	10	1.6	November
December .	6.3	5.5	4.7	5.5	62.3	20	16	12	16	0	2	7	11	0	0	18	5	2	8	5	7	29	10	9	1.5	December
Jahr	6.1	5.8	5.7	5.9	583.5	168	149	114	103	0	7	65	116	0	16	97	14	68	92	70	60	213	161	320	2.2	Jahr

Aasberg.

H = 909 m h_t = 1.6 m h_r = 1.0 m

Monat.	I	II	III	Mittel.	Niederschlag. Summe.	Niederschlag.	≥ 0.1 mm.	≥ 1.0 mm.	Schnee. ≥ 0.1 mm.	Hagel.	Nebel.	Heiter.	Trübe	Gewitter	Sturm.	N	NE	E	SE	S	SW	W	NW	C	Windstärke. Mittel.	Monat.
Januar . . .	5.9	6.2	4.5	5.5	30.2	17	17	10	15	0	0	6	5	0	0	0	6	1	2	1	4	42	35	2	2.6	Januar
Februar . .	7.8	7.6	6.3	7.2	53.2	23	23	15	23	0	0	3	14	0	0	0	1	27	4	0	3	24	23	2	2.1	Februar
März	4.4	5.8	7.4	5.9	6.6	13	12	3	12	0	0	7	8	0	0	0	3	11	1	0	6	50	21	1	1.6	März
April	4.9	5.1	5.3	5.1	13.0	10	10	4	10	0	0	8	8	0	0	0	4	11	2	1	19	43	8	2	1.4	April
Mai	7.0	6.8	6.3	6.7	73.6	16	16	11	7	0	1	6	13	0	0	0	0	22	27	0	9	28	2	5	1.6	Mai
Juni	6.4	6.7	5.3	6.1	34.8	9	7	4	0	0	0	3	10	0	0	0	0	14	7	2	20	47	0	0	2.1	Juni
Juli	5.7	7.6	6.9	6.7	21.2	14	11	7	0	0	0	0	14	0	0	0	1	20	16	4	22	27	0	3	1.5	Juli
August . . .	8.0	8.6	8.1	8.2	83.7	24	23	13	0	2	0	0	20	0	0	0	0	18	18	1	9	42	0	5	1.6	August
September .	7.4	8.0	8.2	7.9	60.0	17	16	10	0	0	0	0	18	0	0	0	1	14	11	0	4	54	5	1	1.9	September
Oktober . .	7.0	7.0	5.8	6.6	39.7	16	16	11	8	0	1	4	12	0	0	0	1	29	0	0	0	49	10	4	1.9	Oktober
November .	6.7	6.2	5.3	6.1	38.7	12	11	6	10	0	0	7	11	0	0	0	0	13	0	0	4	45	25	3	1.7	November
December .	6.2	6.4	6.2	6.3	35.7	19	18	8	18	0	0	5	13	0	0	2	0	18	1	0	1	30	39	2	1.8	December
Jahr	6.4	6.8	6.3	6.5	490.4	190	180	102	103	2	2	49	146	0	0	2	17	198	89	9	101	481	168	30	1.8	Jahr

Veggli.

H = 203 m h_t = 1.8 m h_r = 1.0 m

Monat.	I	II	III	Mittel.	Niederschlag. Summe.	Niederschlag.	≥ 0.1 mm.	≥ 1.0 mm.	Schnee. ≥ 0.1 mm.	Hagel.	Nebel.	Heiter.	Trübe	Gewitter	Sturm.	N	NE	E	SE	S	SW	W	NW	C	Windstärke. Mittel.	Monat.
Januar . . .	3.9	4.3	2.1	3.4	25.3	4	4	4	4	0	0	12	2	0	0	10	0	3	0	1	6	23	46	4	1.6	Januar
Februar . .	6.0	6.0	5.4	5.8	79.5	15	15	13	13	0	0	7	11	0	0	10	2	5	6	9	6	12	30	4	1.5	Februar
März	3.7	4.3	2.9	3.6	9.7	5	5	3	5	0	0	10	5	0	0	2	7	2	9	8	0	8	57	0	1.6	März
April	3.5	4.1	3.6	3.7	31.7	7	7	6	5	0	0	10	3	0	0	6	2	12	11	5	9	19	26	0	1.4	April
Mai	6.9	6.6	4.9	6.1	112.2	12	12	11	0	0	0	7	13	0	0	4	10	9	20	12	5	10	23	0	1.6	Mai
Juni	4.0	5.7	3.2	4.3	36.7	7	7	6	0	0	0	8	5	0	0	16	2	8	12	6	5	9	32	0	1.5	Juni
Juli	3.9	5.2	4.8	4.6	62.2	9	8	4	0	1	0	6	6	0	0	2	6	13	25	11	15	12	9	0	1.3	Juli
August . . .	7.0	6.6	6.3	6.6	51.3	20	20	14	0	0	0	3	10	0	0	8	12	17	13	14	9	4	14	2	1.2	August
September .	5.4	6.6	4.2	5.4	175.8	12	12	11	0	0	0	4	5	0	0	4	6	7	6	5	6	23	32	1	1.3	September
Oktober . .	5.0	5.3	4.4	4.9	78.3	10	10	8	2	0	0	8	7	0	0	17	0	1	6	9	8	12	32	8	1.4	Oktober
November .	4.8	6.2	3.9	5.0	45.4	5	4	4	4	0	0	6	6	0	0	14	2	8	2	4	6	22	31	1	1.3	November
December .	5.6	4.9	4.0	4.8	53.2	11	11	9	11	0	0	6	9	0	0	4	1	2	7	3	5	24	43	4	1.2	December
Jahr	5.0	5.5	4.1	4.8	761.3	117	115	93	44	1	0	87	82	0	0	97	50	87	117	87	80	178	375	24	1.4	Jahr

1925.

Horten.

$\lambda = 10^0\ 28'$ E $= 41^m\ 52^s$ $\varphi = 59^0\ 20'$ N

Monat.	Luftdruck. (Normalschwere. Mittel.	Luft-Temperatur. Min.	I	II	III	Mittel.	beobachtetes Max.	Dat.	Min.	Dat.	Absolute Feuchtigkeit. I	II	III	Mittel.	Relat. Feuchtigk. I	II	III	Mittel.	Monat.
Januar		-1.3	0.9	2.3	1.7	1.4	9.7	7	-6.6	27	3.9	4.2	4.0	4.0	78	74	74	76	Januar
Februar		-2.0	-0.2	3.0	1.6	1.1	7.2	15	-11.9	21	3.9	4.1	3.9	4.0	81	71	74	76	Februar
März		-4.6	-2.6	1.8	0.3	-0.8	10.6	31	-12.2	15	3.0	3.1	2.8	2.9	72	58	59	64	März
April		1.9	4.0	8.4	6.9	5.4	12.6	10	-6.9	2	4.4	4.8	4.7	4.5	70	57	61	66	April
Mai		7.2	8.6	11.9	11.5	9.8	17.9	18	2.4	1	6.4	7.2	6.9	6.7	76	70	69	74	Mai
Juni		11.4	14.9	19.1	17.2	15.6	29.5	10	6.4	19	7.3	7.1	7.1	7.1	58	44	49	57	Juni
Juli		15.6	19.0	23.5	21.1	19.7	31.2	22	11.4	11	10.4	10.1	9.1	9.8	64	48	51	59	Juli
August		12.7	15.8	19.6	17.4	16.4	23.4	6	7.9	30	9.4	9.4	9.2	9.2	71	56	63	67	August
September		7.7	10.7	15.3	11.9	11.6	19.0	6	4.2	14	7.1	6.8	6.6	6.7	73	54	64	67	September
Oktober		1.9	4.7	9.1	6.0	6.0	20.6	2	-6.6	20	4.6	4.4	4.2	4.3	70	50	59	62	Oktober
November		-4.8	-2.5	-0.2	-1.4	-1.7	8.8	20	-11.3	30	3.3	3.4	3.3	3.3	78	70	75	75	November
December		-9.1	-6.0	-4.7	-5.6	-5.6	5.6	6	-17.0	3	2.8	2.7	2.6	2.7	87	77	79	82	December
Jahr		3.0	5.6	9.1	7.4	6.6	31.2		-17.0		5.5	5.6	5.4	5.4	73	61	65	69	Jahr

Aas.

$\lambda = 10^0\ 46'$ E $= 43^m\ 4^s$ $\varphi = 59^0\ 40'$ N $C_g = 1.25$ mb bei 959 mb

Monat.	Luftdruck.	Min.	I	II	III	Mittel.	Max.	Dat.	Min.	Dat.	I	II	III	Mittel.	I	II	III	Mittel.	Monat.
Januar	1001.9	-3.4	-1.2	1.5	0.7	0.0	8.4	7	-11.6	27	3.9	4.1	4.0	4.0	89	80	82	85	Januar
Februar	991.3	-3.2	-1.5	1.8	0.4	-0.2	5.7	5	-12.2	21	3.6	3.8	3.8	3.7	84	72	80	80	Februar
März	1001.3	-8.0	-5.2	1.1	-1.0	-2.6	7.8	6	-16.2	15	2.7	2.9	2.9	2.7	81	57	66	72	März
April	999.3	0.1	2.8	9.2	6.6	4.8	15.6	12	-10.6	2	4.5	4.4	4.6	4.4	79	52	64	72	April
Mai	1002.1	6.0	8.6	12.4	11.7	9.6	20.9	20	-0.9	1	6.7	6.9	6.9	6.7	80	66	69	77	Mai
Juni	00.8	10.4	13.5	18.7	17.3	14.9	28.5	10	6.3	2	7.7	7.8	7.8	7.7	67	50	54	65	Juni
Juli	02.2	13.8	17.8	23.2	21.6	19.0	31.0	22	8.9	11	11.4	10.3	10.5	10.6	75	51	56	70	Juli
August	998.2	12.0	14.3	18.7	16.9	15.4	24.3	7	5.9	31	9.9	9.7	10.0	9.8	80	61	70	76	August
September	95.4	6.5	8.8	14.4	10.7	10.3	19.4	16	2.4	13	7.2	7.2	7.6	7.2	85	60	79	79	September
Oktober	96.5	0.5	2.6	7.9	4.7	4.5	17.2	2	-9.4	20	4.9	4.9	4.9	4.8	85	61	72	75	Oktober
November	1000.8	-7.5	-5.4	-2.2	-4.4	-4.4	4.6	20	-17.0	30	2.9	3.2	3.1	3.1	88	81	87	86	November
December	989.4	-14.0	-9.5	-7.4	-9.2	-9.1	3.9	30	-23.2	20	2.3	2.4	2.3	2.3	87	84	86	86	December
Jahr	998.3	1.1	3.8	8.3	6.3	5.2	31.0		-23.2		5.6	5.6	5.7	5.6	82	65	72	77	Jahr

Ømark.

$\lambda = 11^0\ 40'$ E $= 46^m\ 40^s$ $\varphi = 59^0\ 24'$ N $C_g = 1.25$ mb bei 1011 mb

Monat.	Luftdruck.	Min.	I	II	III	Mittel.	Max.	Dat.	Min.	Dat.	I	II	III	Mittel.	I	II	III	Mittel.	Monat.
Januar	999.3	-3.1	0.0	1.8	0.6	0.5	6.7	31	-13.4	27									Januar
Februar	88.5	-3.7	-1.2	1.5	0.0	-0.3	5.5	5	-14.0	21									Februar
März	97.7	-9.4	-5.1	1.1	-2.7	-3.2	8.4	27	-20.7	11									März
April	96.1	-2.3	3.6	9.7	5.5	4.3	17.3	10	-6.6	2									April
Mai	99.0	4.9	9.2	13.0	10.5	9.3	20.2	19	-2.9	1									Mai
Juni	97.1	8.3	14.5	18.8	15.9	14.3	28.4	10	3.1	19									Juni
Juli	99.6	11.5	19.3	22.9	18.9	18.1	30.9	23	8.3	31									Juli
August	95.2	9.9	14.8	18.1	14.9	14.5	21.5	5	2.3	31									August
September	92.2	4.7	8.9	14.1	10.1	9.7	18.2	16	-0.4	28									September
Oktober	93.2	-1.0	2.6	7.2	3.9	3.9	15.0	2	-12.3	20									Oktober
November	97.1	-8.6	-5.5	-2.1	-4.4	-4.5	6.8	20	-22.0	30									November
December	86.1	-16.7	-10.8	-7.9	-9.4	-9.9	3.3	30	-28.7	2									December
Jahr	995.1	-0.5	4.2	8.2	5.3	4.7	30.9		-28.7										Jahr

Færder.

$\lambda = 10^0\ 32'$ E $= 42^m\ 8^s$ $\varphi = 59^0\ 2'$ N $C_g = 1.25$ mb bei 985 mb

Monat.	Luftdruck.	Min.	I	II	III	Mittel.	Max.	Dat.	Min.	Dat.	I	II	III	Mittel.	I	II	III	Mittel.	Monat.
Januar	1013.1	2.2	3.4	4.1	4.1	3.8	7.7	7	-5.0	27	5.1	5.1	5.0	5.1	85	82	80	82	Januar
Februar	01.6	1.2	2.0	2.7	2.7	2.4	0.0	5	-4.4	21	4.5	4.6	4.7	4.6	82	81	82	82	Februar
März	12.0	-2.5	-1.0	0.9	1.0	-0.1	6.2	6	-8.4	14	3.4	3.6	3.7	3.5	74	68	70	71	März
April	10.0	2.9	4.4	7.2	6.6	5.4	11.3	10	0.0	1	5.0	5.4	5.6	5.2	79	71	76	78	April
Mai	12.2	7.9	9.6	11.3	11.1	10.0	16.8	18	1.6	1	7.2	7.7	8.0	7.5	81	77	81	82	Mai
Juni	11.1	11.8	13.8	16.2	15.6	14.3	26.2	10	7.6	4	8.6	9.3	9.7	9.1	73	68	74	76	Juni
Juli	12.5	17.5	19.3	21.3	20.5	19.7	26.0	22	13.0	11	12.5	12.7	12.8	12.6	75	68	72	75	Juli
August	08.3	15.2	16.6	18.6	18.1	17.2	22.2	6	11.7	31	10.8	10.9	11.2	10.9	77	69	73	75	August
September	05.7	10.8	12.0	14.1	13.5	12.7	16.2	2	7.6	2	8.3	8.4	8.6	8.3	80	70	75	76	September
Oktober	06.9	5.6	7.2	8.5	8.5	7.8	15.3	2	-0.4	19	6.0	5.9	5.8	5.8	78	71	70	73	Oktober
November	11.0	-0.5	0.8	1.3	1.6	1.0	9.6	20	-6.6	30	4.1	4.0	4.1	4.1	79	78	78	78	November
December	999.5	-4.3	-2.3	-1.9	-1.7	-2.1	6.0	6	-11.8	1	3.6	3.8	3.6	3.7	85	88	82	85	December
Jahr	1008.7	5.6	7.2	8.7	8.5	7.7	26.2		-11.8		6.6	6.8	6.9	6.7	71	74	76	78	Jahr

1925.

Horten.

H = 4 m h_t = 2.1 m h_r = 1.0 m

Monat.	Bewölkung. I	II	III	Mittel.	Niederschlag. Summe.	Zahl der Tage mit Niederschlag.	≥ 0.1 mm.	≥ 1.0 mm.	Schnee. ≥ 0.1 mm.	Hagel.	Nebel.	Heiter.	Trübe.	Gewitter.	Sturm.	Windverteilung. N	NE	E	SE	S	SW	W	NW	C	Windstärke. Mittel.	Monat.
Januar . . .	5.9	6.0	4.4	5.4	47.0	10	9	5	3	0	0	4	6	0	0	19	0	0	2	32	7	6	10	17	2.7	Januar
Februar . .	6.9	6.5	6.2	6.5	65.0	16	12	11	5	0	0	6	12	0	0	16	9	8	11	12	14	5	3	6	3.2	Februar
März	5.6	4.3	3.9	4.6	43.8	12	7	4	5	0	0	8	4	0	0	22	20	0	7	18	4	2	6	14	2.5	März
April	4.9	3.8	4.0	4.2	37.7	13	10	6	2	1	1	6	3	1	0	18	9	3	6	12	16	7	2	17	2.0	April
Mai	7.1	6.5	5.7	6.4	74.4	16	13	12	0	0	0	5	14	1	0	24	13	6	8	26	7	0	3	6	2.4	Mai
Juni	5.0	4.0	4.4	4.5	49.9	11	7	7	0	0	0	6	5	0	0	17	3	6	2	16	12	6	12	16	2.3	Juni
Juli	4.8	4.1	3.7	4.2	60.3	7	7	6	0	0	0	6	5	3	0	16	2	4	10	27	7	1	3	23	2.2	Juli
August . . .	6.4	5.4	6.1	6.0	58.6	11	10	10	0	0	0	3	8	0	0	12	9	9	4	26	6	1	5	21	2.3	August
September .	5.4	5.3	4.9	5.2	127.3	13	11	10	0	0	0	4	5	1	0	12	2	3	6	28	1	7	13	18	2.5	September
Oktober . .	5.9	5.6	4.9	5.5	133.0	11	10	9	2	0	1	8	8	0	0	19	0	2	1	28	2	14	15	12	2.3	Oktober
November .	6.6	5.8	5.3	5.9	80.8	12	8	7	7	0	4	6	10	0	0	27	6	5	0	2	2	8	12	28	1.9	November
December .	6.9	5.8	5.7	6.1	64.8	14	11	9	11	0	5	4	13	0	0	27	3	6	0	6	0	8	21	22	2.5	December
Jahr	6.0	5.3	4.9	5.4	842.6	146	115	96	35	1	11	66	93	6	0	229	76	52	57	233	78	65	105	200	2.4	Jahr

Aas.

H = 95 m, H_b = 95.3 m h_t = 2.1 m h_r = 1.6 m

Januar . . .	6.6	6.4	4.2	5.7	43.0	10	10	6	4	0	9	4	8	0	0	4	0	1	12	33	10	10	12	11	1.8	Januar
Februar . .	7.2	7.0	6.7	7.0	58.0	17	16	10	9	0	3	4	14	0	0	9	11	10	12	18	10	5	5	4	2.2	Februar
März	6.4	5.2	5.7	5.8	27.8	13	10	5	10	0	2	5	10	0	0	15	11	3	10	13	4	6	19	12	1.7	März
April	5.4	5.3	4.9	5.2	41.7	14	12	8	3	1	2	6	8	1	0	8	8	5	9	21	14	13	11	1	2.0	April
Mai	8.1	6.7	6.1	7.0	107.0	18	17	13	0	0	4	5	18	1	0	10	10	10	15	21	14	4	9	0	2.0	Mai
Juni	5.3	5.4	5.1	5.3	23.2	16	10	5	0	0	3	4	6	0	0	18	13	0	3	17	13	12	14	0	2.1	Juni
Juli	4.8	4.5	4.6	4.6	91.4	10	9	8	0	0	1	5	4	5	0	8	8	10	12	33	16	2	3	1	1.6	Juli
August . . .	7.0	6.4	6.3	6.6	67.0	21	15	11	0	0	2	1	11	1	0	6	10	8	15	22	8	5	16	3	1.7	August
September .	6.9	5.7	5.5	6.0	79.5	20	18	8	0	0	4	1	7	4	0	11	8	4	10	13	13	11	7	13	1.7	September
Oktober . .	5.9	6.2	5.5	5.9	102.0	15	14	9	3	0	4	8	13	0	0	13	7	6	9	11	11	12	7	17	1.7	Oktober
November .	7.8	6.6	5.8	6.7	36.6	15	11	7	11	0	7	3	13	0	0	18	6	4	4	4	0	0	11	43	0.7	November
December .	7.1	6.5	5.6	6.4	67.4	15	15	8	15	0	6	3	13	0	0	12	12	7	7	6	2	5	15	27	0.9	December
Jahr	6.5	6.0	5.5	6.0	744.6	184	157	98	55	1	47	49	125	12	0	132	104	68	118	212	115	85	129	132	1.7	Jahr

Ømark.

H = 125 m, H_b = 126.5 m h_t = 1.3 m h_r = 1.4 m

Januar . . .	7.4	7.4	5.7	6.8	40.2	7	7	7	3	0	1	5	15	0	0	1	9	0	4	4	49	8	5	13	1.7	Januar
Februar . .	7.7	8.3	7.4	7.8	50.0	10	9	9	5	0	1	2	18	0	0	0	6	13	16	3	29	6	0	11	1.9	Februar
März	6.3	6.6	5.0	6.0	21.3	7	7	5	7	0	1	4	11	0	0	4	19	3	15	0	16	8	7	21	1.3	März
April	4.8	6.7	5.7	5.7	35.1	7	7	6	2	0	0	7	10	0	0	2	14	4	11	4	25	9	10	11	1.5	April
Mai	8.1	8.0	6.5	7.5	80.3	9	9	8	0	0	1	4	18	0	0	0	3	12	28	9	26	3	3	9	1.5	Mai
Juni	5.4	6.7	4.8	5.6	54.6	5	5	4	0	0	0	5	9	1	0	8	7	9	7	0	24	16	15	4	2.0	Juni
Juli	6.1	7.1	6.2	6.5	104.9	9	9	9	0	0	0	4	13	2	0	1	3	16	11	2	32	2	4	22	1.2	Juli
August . . .	6.5	8.4	8.0	7.6	108.3	12	12	10	0	0	0	0	15	1	0	1	0	16	9	2	35	8	17	5	1.7	August
September .	7.2	7.8	6.1	7.0	59.0	11	11	11	0	0	3	1	12	0	0	3	10	5	11	0	29	3	11	18	1.5	September
Oktober . .	6.6	6.9	5.2	6.2	61.6	12	12	12	2	0	3	6	13	0	0	6	10	3	14	4	23	6	13	14	1.6	Oktober
November .	6.5	7.0	6.6	6.7	51.6	7	7	7	7	0	3	4	13	0	0	1	18	10	8	0	6	4	9	34	0.9	November
December .	6.1	6.3	5.7	6.0	53.8	6	6	6	6	0	1	5	11	0	0	6	6	9	12	1	8	4	2	45	0.9	December
Jahr	6.6	7.3	6.1	6.6	720.7	102	101	94	32	0	14	47	158	4	0	33	105	100	146	29	302	77	96	207	1.5	Jahr

Færder.

H = 6 m, H_b = 9.1 m h_t = 6.4 m h_r = 1.0 m

Januar . . .	6.1	6.2	4.5	5.6	47.4	8	8	7	2	0	4	5	8	0	1	12	3	0	1	10	42	20	4	1	3.8	Januar
Februar . .	6.8	6.9	6.4	6.7	71.8	15	15	12	7	1	3	4	12	0	1	7	14	11	6	12	23	8	1	2	4.2	Februar
März	5.6	4.7	4.5	4.9	23.2	8	7	5	6	0	2	9	7	0	0	26	15	1	3	9	20	10	6	3	3.0	März
April	5.4	3.9	4.3	4.5	35.7	9	9	7	1	0	2	9	5	0	0	18	10	6	1	15	23	7	3	7	2.4	April
Mai	7.7	6.1	5.9	6.6	88.9	13	13	11	0	0	3	4	13	1	0	14	18	9	8	13	21	2	2	6	2.4	Mai
Juni	5.1	4.8	4.1	4.7	18.4	7	5	4	0	0	1	6	5	0	0	20	6	5	2	13	28	4	8	4	2.7	Juni
Juli	4.5	3.4	3.3	3.7	36.0	7	6	5	0	0	1	5	2	2	0	7	10	6	6	21	30	8	0	5	2.0	Juli
August . . .	5.1	4.6	5.5	5.1	28.3	8	6	5	0	0	0	6	4	0	0	8	10	9	5	15	30	8	4	4	3.0	August
September .	5.0	4.7	4.9	4.9	80.5	12	12	9	0	0	1	2	4	0	0	16	9	1	6	10	30	9	4	5	3.2	September
Oktober . .	6.2	5.8	5.1	5.7	78.5	14	14	10	1	0	0	8	12	0	0	12	8	7	6	11	21	13	11	4	3.7	Oktober
November .	6.0	6.0	6.0	6.0	48.9	10	9	6	2	0	4	4	12	0	0	26	18	5	6	1	13	8	9	4	3.0	November
December .	5.8	6.1	4.8	5.6	83.2	14	12	10	10	0	11	5	9	0	0	24	16	4	6	6	11	14	8	4	3.5	December
Jahr	5.8	5.3	4.9	5.3	640.8	125	116	91	29	1	32	67	93	3	2	190	137	64	56	136	292	111	60	49	3.1	Jahr

Ulefos.

$\lambda = 9^0\ 16'\,E = 37^m\ 4^s$ $\varphi = 59^0\ 17'\,N$

Monat.	Luftdruck. Normalschwere. Mittel.	Luft-Temperatur. Min.	I	II	III	Mittel.	beobachtetes Max.	Dat.	Min.	Dat.	Absolute Feuchtigkeit. I	II	III	Mittel.	Relat. Feuchtigk. I	II	III	Mittel.	Monat.
Januar		-3.7	-1.3	0.0	-1.3	-1.1	8.8	8	-11.4	28									Januar
Februar . . .		-2.9	-1.1	0.7	-0.7	-0.7	6.5	15	-11.1	21									Februar
März		-6.2	-2.7	0.6	-1.8	-2.0	9.3	31	-15.9	14									März
April		-0.9	4.8	8.1	3.1	3.9	15.1	21	-4.7	4									April
Mai		5.2	9.3	13.6	8.7	9.1	21.9	20	-0.8	2									Mai
Juni		8.4	14.4	19.1	14.5	13.9	29.9	10	3.0	2									Juni
Juli		12.5	19.9	24.1	20.5	19.1	31.3	23	8.3	11									Juli
August		11.2	15.8	18.7	15.4	15.2	23.4	1	6.3	31									August
September . .		6.1	10.0	14.0	10.4	10.4	16.1	5	-0.2	27									September
Oktober . . .		0.7	3.7	8.3	4.5	4.8	19.0	3	-8.9	20									Oktober
November . .		-5.6	-3.8	-1.9	-3.0	-3.2	5.3	19	-14.2	30									November
December . .		-12.0	-8.9	-7.7	-8.2	-8.5	4.1	6	-21.4	20									December
Jahr		1.1	5.0	8.1	5.2	5.1	31.3		-21.4										Jahr

Gvarv.

$\lambda = 9^0\ 10'\,E = 36^m\ 40^s$ $\varphi = 59^0\ 24'\,N$ $C_g = 1.25$ mb bei 972 mb

Monat.	Luftdruck. Normalschwere. Mittel.	Min.	I	II	III	Mittel.	Max.	Dat.	Min.	Dat.	I	II	III	Mittel.	I	II	III	Mittel.	Monat.
Januar	1011.4	-5.9	-3.0	0.3	-1.3	-1.7	8.5	7	-14.3	28	3.5	4.0	3.7	3.7	88	81	83	84	Januar
Februar . . .	999.8	-4.6	-2.0	1.7	-0.1	-0.6	8.8	5	-12.5	21	3.6	4.1	4.0	3.9	85	75	82	82	Februar
März	1010.7	-7.7	-4.2	2.9	0.3	-1.4	11.1	30	-15.3	14	2.9	3.2	3.0	2.9	79	54	62	68	März
April	08.0	-2.0	2.5	9.8	6.6	4.4	15.5	12	-7.0	2	4.4	4.7	4.4	4.4	77	51	59	68	April
Mai	10.2	4.5	8.6	13.4	11.8	9.3	21.7	20	-2.0	4	6.8	7.1	6.9	6.8	82	64	67	78	Mai
Juni	09.2	8.6	14.8	19.4	17.3	14.8	30.0	10	2.7	2	8.1	8.2	8.4	8.1	65	50	58	66	Juni
Juli	10.2	11.6	18.0	23.9	21.8	18.6	31.6	23	6.7	1	10.8	10.8	11.0	10.8	71	50	58	68	Juli
August	06.4	10.8	14.8	19.4	17.0	15.5	23.3	8	4.0	31	10.1	10.5	10.3	10.2	81	63	72	77	August
September .	03.8	4.1	8.0	14.5	10.8	9.6	17.9	16	-0.6	26	7.0	8.0	7.7	7.5	86	65	81	81	September
Oktober . . .	05.5	-1.2	2.2	8.7	4.8	4.2	18.9	2	-11.3	20	4.5	5.2	4.7	4.8	83	60	72	74	Oktober
November . .	10.0	-8.1	-6.2	-1.4	-4.4	-4.4	4.5	6	-18.0	30	2.9	3.5	3.1	3.2	88	79	87	86	November
December . .	998.7	-15.0	-10.4	-7.1	-9.7	-9.5	4.4	6	-24.5	16	2.3	2.5	2.3	2.4	87	83	87	86	December
Jahr	1007.0	-0.4	3.6	8.8	6.2	4.9	31.6		-24.5		5.6	6.0	5.8	5.7	81	65	72	76	Jahr

Dalen.

$\lambda = 7^0\ 58'\,E = 31^m\ 52^s$ $\varphi = 59^0\ 27'\,N$ $C_g = 1.15$ mb bei 956 mb

Monat.	Luftdruck. Normalschwere. Mittel.	Min.	I	II	III	Mittel.	Max.	Dat.	Min.	Dat.	I	II	III	Mittel.	I	II	III	Mittel.	Monat.
Januar	1001.7	-3.4	-0.9	0.8	-0.3	-0.3	11.3	11	-10.8	24	3.6	3.7	3.7	3.7	77	75	77	77	Januar
Februar . . .	989.5	-3.6	-1.7	0.4	-0.6	-0.9	6.5	3	-12.3	21	3.6	3.9	3.8	3.8	83	80	82	82	Februar
März	1000.9	-7.3	-4.4	2.4	0.0	-2.2	10.2	19	-15.7	14	2.4	3.4	3.1	2.9	67	59	65	66	März
April	998.1	-0.3	2.8	9.3	5.9	4.6	14.4	11	-5.5	2	3.6	4.9	4.5	4.2	63	54	63	63	April
Mai	99.9	4.7	8.4	13.2	11.4	9.3	23.0	20	-1.4	1	6.2	7.1	6.6	6.5	75	63	65	72	Mai
Juni	99.9	9.1	14.8	19.4	17.9	15.1	30.4	10	4.3	2	7.4	8.7	8.1	8.0	59	52	54	59	Juni
Juli	1000.6	13.3	18.3	23.1	21.9	19.0	31.1	23	7.9	9	9.6	11.1	10.9	10.4	62	54	57	61	Juli
August	996.9	10.4	14.3	18.0	16.3	14.8	23.4	7	6.5	16	8.9	10.2	10.0	9.6	74	67	73	74	August
September . .	94.1	6.0	8.8	13.4	10.4	9.9	17.0	7	3.2	25	6.4	7.7	7.4	7.1	75	67	78	75	September
Oktober . . .	96.0	0.8	3.2	6.9	4.1	4.2	17.0	1	-8.9	19	4.5	5.1	4.6	4.7	76	68	74	74	Oktober
November . .	1000.2	-4.5	-2.5	-0.5	-1.7	-1.9	11.1	21	-12.6	30	3.2	3.5	3.4	3.4	77	74	78	77	November
December . .	988.9	-9.5	-6.4	-5.3	-6.2	-6.2	7.0	6	-19.0	15	2.6	2.7	2.7	2.7	80	79	80	80	December
Jahr	997.2	1.3	4.6	8.4	6.6	5.4	31.1		-19.0		5.2	6.0	5.7	5.6	72	66	70	72	Jahr

Tveitsund.

$\lambda = 8^0\ 31'\,E = 34^m\ 4^s$ $\varphi = 59^0\ 1'\,N$

Monat.	Luftdruck. Normalschwere. Mittel.	Min.	I	II	III	Mittel.	Max.	Dat.	Min.	Dat.	I	II	III	Mittel.	I	II	III	Mittel.	Monat.
Januar		-3.6	0.0	2.7	0.9	0.9	9.4	7	-10.3	28	3.8	4.2	3.8	3.9	80	75	75	77	Januar
Februar		-3.8	-0.8	1.3	-0.3	-0.3	6.2	5	-12.5	21	3.7	3.9	3.8	3.8	80	76	82	80	Februar
März		-7.2	-4.2	1.8	-0.8	-2.0	8.9	19	-16.1	15	2.7	3.1	2.9	2.8	75	58	64	68	März
April		-1.4	1.9	7.4	4.7	3.4	12.7	12	-6.4	2	4.0	4.3	4.0	4.0	75	56	61	68	April
Mai		3.9	7.5	12.1	10.9	8.6	21.8	20	-0.4	2	6.2	6.5	6.6	6.3	79	62	62	73	Mai
Juni		7.8	13.7	18.5	17.0	14.1	28.8	10	3.0	3	7.2	7.5	7.2	7.2	61	48	51	59	Juni
Juli		11.2	17.4	22.4	21.3	18.0	31.0	22	7.2	30	10.0	9.5	8.9	9.4	68	48	49	61	Juli
August		10.6	14.6	17.5	15.9	14.7	23.5	8	6.1	31	9.3	9.1	8.8	9.0	75	62	65	70	August
September . .		5.8	8.7	13.4	10.0	9.7	17.1	15	0.4	26	6.7	7.0	6.8	6.7	79	61	74	74	September
Oktober . . .		0.7	3.3	7.5	5.0	4.7	16.5	2	-8.7	20	4.4	4.7	4.5	4.5	75	60	67	69	Oktober
November . .		-5.3	-2.8	-0.1	-2.1	-2.1	10.3	20	-15.6	30	3.1	3.4	3.2	3.2	75	71	74	74	November
December . .		-12.0	-5.8	-4.0	-5.7	-5.5	6.4	6	-21.2	16	2.7	2.9	2.8	2.8	82	78	83	82	December
Jahr		0.6	4.5	8.4	6.4	5.4	31.0		-21.2		5.3	5.5	5.3	5.3	75	63	67	71	Jahr

1925.

Ulefos.

H = 92 m h_t = 1.8 m h_r = 1.0 m

Monat.	Bewölkung. I	II	III	Mittel.	Niederschlag. Summe.	Zahl der Tage mit Niederschlag.	≥ 0.1 mm.	≥ 1.0 mm.	Schnee. ≥ 0.1 mm.	Hagel.	Nebel.	Heiter.	Trübe.	Gewitter.	Sturm.	Windverteilung. N	NE	E	SE	S	SW	W	NW	C	Windstärke Mittel.	Monat.
Januar . . .	4.7	6.0	5.0	5.2	19.5	4	4	3	2	0	1	6	6	0	0	0	0	3	0	0	1	19	3	67	0.8	Januar
Februar . .	6.6	6.5	6.4	6.5	97.9	13	13	11	7	0	1	2	13	0	0	0	0	5	4	0	6	18	1	50	1.1	Februar
März	3.9	2.9	2.2	3.0	32.6	6	6	6	6	0	0	15	5	0	0	0	8	2	0	0	0	2	11	70	0.5	März
April	3.6	4.6	4.3	4.2	35.5	10	9	6	2	0	0	9	6	0	0	3	0	4	0	0	2	0	5	76	0.3	April
Mai	6.9	5.6	5.7	6.1	153.0	14	14	13	0	0	0	4	11	0	0	0	2	0	3	0	1	1	0	86	0.2	Mai
Juni	4.9	4.2	4.5	4.5	50.9	7	7	6	0	0	0	7	5	0	0	1	1	0	0	0	0	9	14	65	0.7	Juni
Juli	3.6	3.9	4.8	4.1	55.0	9	9	5	0	0	0	8	5	0	0	0	0	3	1	0	0	8	0	81	0.3	Juli
August . . .	6.5	6.0	5.7	6.1	108.5	13	13	12	0	0	0	1	7	0	0	0	0	1	2	0	0	11	2	77	0.4	August
September .	5.8	6.2	5.1	5.7	130.3	8	8	8	0	0	2	0	5	0	0	0	0	0	0	0	4	6	3	77	0.3	September
Oktober . .	4.8	5.3	5.2	5.1	121.1	9	9	8	2	0	0	8	11	0	0	3	2	0	0	0	0	4	10	74	0.5	Oktober
November .	5.5	5.8	4.6	5.3	47.3	4	4	4	4	0	3	4	6	0	0	3	2	0	0	0	1	1	0	83	0.2	November
December .	5.3	6.1	5.5	5.6	75.4	8	8	8	8	0	2	8	11	0	0	2	0	1	0	0	2	4	9	75	0.5	December
Jahr	5.2	5.3	4.9	5.1	927.0	105	104	90	31	0	9	72	91	0	0	12	15	19	10	0	17	83	58	881	0.5	Jahr

Gvarv.

H = 21 m, H_b = 24.8 m h_t = 3.3 m h_r = 1.3 m

Monat.	I	II	III	Mittel.	Niederschlag. Summe.	Niederschlag.	≥ 0.1 mm.	≥ 1.0 mm.	Schnee. ≥ 0.1 mm.	Hagel.	Nebel.	Heiter.	Trübe.	Gewitter.	Sturm.	N	NE	E	SE	S	SW	W	NW	C	Windstärke Mittel.	Monat.
Januar . . .	5.7	5.4	3.8	5.0	29.0	10	9	4	4	1	3	6	5	0	0	6	0	2	7	4	2	7	24	41	1.2	Januar
Februar . .	6.7	6.3	6.2	6.4	69.6	18	17	11	10	1	3	4	13	0	0	8	3	4	18	1	1	5	13	31	1.8	Februar
März	4.1	4.3	3.9	4.1	24.5	8	7	4	6	0	1	10	4	0	0	6	3	0	15	2	0	3	23	41	1.6	März
April	4.1	4.7	4.4	4.4	34.6	13	13	9	5	0	0	8	4	0	0	1	1	0	22	6	1	2	14	43	1.3	April
Mai	7.4	6.0	5.4	6.3	130.9	19	17	11	0	0	0	5	10	0	0	3	2	2	36	0	2	5	9	34	1.9	Mai
Juni	4.8	5.0	4.5	4.8	50.1	14	11	6	0	0	1	5	6	2	0	9	2	5	38	1	1	8	10	16	2.4	Juni
Juli	3.9	4.9	4.6	4.5	55.8	12	11	10	0	0	0	3	3	1	0	2	2	8	41	4	1	3	5	27	1.7	Juli
August . . .	5.9	6.3	5.8	6.0	56.7	20	20	11	0	0	1	1	7	2	0	4	4	4	23	3	1	2	11	41	1.5	August
September .	4.7	5.9	5.2	5.3	135.9	16	14	9	0	0	3	5	4	1	0	6	4	1	25	4	1	4	16	29	1.8	September
Oktober . .	5.7	5.4	4.6	5.2	95.3	9	9	8	2	0	0	7	9	0	0	9	2	1	18	1	4	5	17	36	1.7	Oktober
November .	5.0	5.1	4.3	4.8	42.4	11	7	5	7	0	4	6	6	0	0	4	4	0	2	0	0	1	25	54	0.7	November
December .	5.5	5.8	4.8	5.4	41.7	11	10	9	10	0	2	11	10	0	0	4	2	2	3	0	1	0	19	62	0.8	December
Jahr	5.3	5.4	4.8	5.2	766.5	161	145	97	44	2	18	71	81	6	0	62	29	29	248	26	15	45	186	455	1.5	Jahr

Dalen.

H = 102 m, H_b = 103.0 m h_t = 2.6 m h_r = 1.4 m

Monat.	I	II	III	Mittel.	Niederschlag. Summe.	Niederschlag.	≥ 0.1 mm.	≥ 1.0 mm.	Schnee. ≥ 0.1 mm.	Hagel.	Nebel.	Heiter.	Trübe.	Gewitter.	Sturm.	N	NE	E	SE	S	SW	W	NW	C	Windstärke Mittel.	Monat.
Januar . . .	5.4	6.2	4.2	5.3	63.4	11	10	9	6	0	0	6	4	0	0	0	0	3	0	0	0	36	0	54	0.7	Januar
Februar . .	8.4	8.0	6.5	7.6	151.2	22	22	22	12	0	0	2	16	0	0	0	0	11	0	0	0	12	1	60	0.5	Februar
März	4.6	5.6	6.0	5.4	15.1	11	11	4	11	0	0	8	11	0	0	1	0	8	0	0	0	43	4	37	1.2	März
April	4.7	5.6	5.3	5.2	41.6	12	11	8	3	1	0	5	8	0	0	1	0	11	0	0	0	35	2	41	1.1	April
Mai	8.4	7.4	6.6	7.5	128.3	16	15	12	0	0	1	3	17	0	0	2	0	23	0	0	1	21	1	45	0.7	Mai
Juni	5.1	6.3	5.2	5.5	32.9	5	5	3	0	0	0	5	7	0	0	4	2	18	0	0	0	36	12	18	1.4	Juni
Juli	4.1	6.5	6.1	5.6	45.3	13	12	10	0	0	0	4	7	0	0	2	1	22	0	0	0	24	5	39	0.9	Juli
August . . .	6.8	7.9	7.5	7.4	76.3	19	16	14	0	0	1	0	16	0	0	4	2	9	0	0	0	19	5	54	0.7	August
September .	5.9	7.8	7.3	7.0	99.7	18	14	10	0	0	0	1	10	0	0	2	2	6	0	0	1	30	3	46	1.0	September
Oktober . .	6.5	6.1	5.5	6.0	126.8	14	13	10	5	0	1	6	12	0	0	3	0	1	0	0	0	37	2	50	1.0	Oktober
November .	5.8	6.0	4.0	5.3	39.3	5	5	5	5	0	1	7	9	0	0	0	0	2	0	0	0	31	8	49	0.7	November
December .	5.6	6.0	4.5	5.4	63.4	13	12	8	12	0	0	7	12	0	0	0	0	0	0	0	0	33	0	60	0.5	December
Jahr	5.9	6.6	5.7	6.1	883.3	159	146	115	54	1	4	54	129	0	0	19	7	114	0	0	2	357	43	553	0.9	Jahr

Tveitsund.

H = 257 m h_t = 4.2 m h_r = 1.2 m

Monat.	I	II	III	Mittel.	Niederschlag. Summe.	Niederschlag.	≥ 0.1 mm.	≥ 1.0 mm.	Schnee. ≥ 0.1 mm.	Hagel.	Nebel.	Heiter.	Trübe.	Gewitter.	Sturm.	N	NE	E	SE	S	SW	W	NW	C	Windstärke Mittel.	Monat.
Januar . . .	5.1	6.1	5.4	5.5	57.7	10	8	6	6	0	5	9	9	0	1	0	0	0	11	11	0	0	46	25	1.7	Januar
Februar . .	8.7	7.5	7.4	7.9	134.4	22	17	16	13	0	15	1	17	0	0	0	0	0	21	21	0	0	32	10	1.2	Februar
März	4.9	5.4	4.9	5.1	30.5	7	5	5	5	0	3	13	10	0	0	0	0	0	8	8	0	0	53	24	1.4	März
April	4.7	3.8	4.8	4.4	64.3	14	9	9	5	0	5	9	5	0	0	0	0	0	11	10	0	0	54	15	1.3	April
Mai	7.4	7.7	6.4	7.2	183.0	15	14	11	1	0	10	4	15	0	0	0	0	0	22	22	0	0	35	14	1.0	Mai
Juni	5.1	5.9	5.3	5.4	62.9	9	8	7	0	0	2	6	10	0	0	0	0	0	12	11	0	0	56	11	1.7	Juni
Juli	3.7	6.8	5.5	5.3	93.4	13	9	8	0	0	1	7	7	3	0	0	0	0	21	21	0	0	29	22	1.1	Juli
August . . .	6.8	7.6	7.4	7.3	77.5	19	16	14	0	0	4	2	15	0	0	0	0	0	22	23	0	0	40	8	1.5	August
September .	6.1	7.2	8.3	7.2	147.3	19	12	10	0	0	4	3	16	0	0	0	0	0	14	13	0	0	34	29	1.2	September
Oktober . .	6.0	5.6	5.3	5.6	141.5	10	9	9	2	0	7	7	12	0	0	0	0	0	12	12	0	0	43	26	1.4	Oktober
November .	6.7	5.7	4.6	5.7	29.0	9	6	4	6	0	7	4	9	0	0	0	0	0	15	15	0	0	45	15	1.3	November
December .	7.5	6.4	6.7	6.9	72.4	11	9	9	9	0	13	4	13	0	0	0	0	0	20	19	0	0	24	30	1.0	December
Jahr	6.1	6.3	6.0	6.1	1093.9	158	122	108	47	0	76	69	138	3	1	0	0	0	189	186	0	0	491	229	1.3	Jahr

Jomfruland.

$\lambda = 9^0\ 36'$ E $= 38^m\ 24^s$ $\varphi = 58^0\ 52'$ N

Monat.	Luftdruck. (Normalschwere). Mittel.	Luft-Temperatur. Min.	I	II	III	Mittel.	beobachtetes Max.	Dat.	Min.	Dat.	Absolute Feuchtigkeit. I	II	III	Mittel.	Relat. Feuchtigk. I	II	III	Mittel.	Monat.
Januar		0.5	2.3	3.9	3.1	2.9	9.3	7	-6.7	27	4.4	4.7	4.5	4.5	79	74	76	77	Januar
Februar		-0.6	1.1	2.9	1.8	1.7	7.1	5	-8.2	21	4.2	4.4	4.3	4.3	80	76	80	80	Februar
März		-3.7	-1.7	2.5	0.7	-0.1	9.6	31	-9.7	15	3.4	3.7	3.5	3.4	79	66	70	73	März
April		2.2	4.7	8.5	6.7	5.6	14.2	27	-1.7	4	4.9	5.7	5.0	5.1	74	67	67	70	April
Mai		7.5	9.4	11.9	11.1	9.9	17.6	20	2.3	1	7.3	7.7	7.1	7.3	82	74	72	78	Mai
Juni		11.2	14.1	17.3	16.0	14.6	25.4	10	7.1	2	8.2	9.1	8.3	8.4	68	63	62	66	Juni
Juli		16.4	18.7	22.0	20.6	19.4	27.0	25	12.6	11	11.8	12.1	11.4	11.7	74	63	64	70	Juli
August		14.3	16.2	19.0	17.8	16.9	22.2	7	9.7	31	10.1	10.7	10.6	10.4	74	66	70	72	August
September		9.4	11.1	15.0	12.5	12.2	18.8	15	6.4	26	7.8	8.4	8.0	8.0	79	66	74	75	September
Oktober		4.2	5.8	9.4	7.6	7.1	18.0	2	-2.4	20	5.5	5.9	5.4	5.6	79	66	68	72	Oktober
November		-2.2	-0.6	1.4	0.2	0.1	9.9	21	-9.5	30	3.7	3.7	3.6	3.7	77	70	76	75	November
December		-6.6	-4.0	-2.6	-3.2	-3.5	4.6	6	-14.1	16	3.0	3.2	3.1	3.1	83	80	81	81	December
Jahr		4.4	6.4	9.3	7.9	7.2	27.0		-14.1		6.2	6.6	6.2	6.3	77	69	72	74	Jahr

Lyngør.

$\lambda = 9^0\ 7'$ E $= 36^m\ 28^s$ $\varphi = 58^0\ 38'$ N $C_g = 1.25$ mb bei 1000 mb

Monat.	Luftdruck.	Min.	I	II	III	Mittel.	Max.	Dat.	Min.	Dat.	I	II	III	Mittel.	I	II	III	Mittel.	Monat.
Januar	1014.3	1.5	3.1	4.7	3.6	3.6	10.7	7	-5.5	27	4.5	4.8	4.4	4.6	77	73	73	75	Januar
Februar	01.8	0.1	1.7	3.3	2.4	2.3	8.5	5	-6.7	22	4.2	4.3	4.4	4.3	79	74	79	78	Februar
März	12.9	-2.8	-0.7	2.8	1.6	0.7	10.1	19	-9.7	14	3.3	3.8	3.5	3.4	70	66	66	68	März
April	10.5	2.7	6.1	7.6	6.9	6.0	12.1	27	-1.7	4	4.9	5.5	5.2	5.1	69	69	69	69	April
Mai	12.2	7.8	10.3	11.4	11.1	10.1	16.1	17	2.9	4	6.9	7.4	7.1	7.0	74	74	72	73	Mai
Juni	11.8	11.6	15.0	16.8	16.2	14.8	28.8	11	6.8	2	8.5	9.6	9.2	9.0	68	68	68	68	Juni
Juli	12.7	15.9	19.4	21.1	20.5	19.2	27.0	26	11.2	29	11.7	12.6	11.9	12.0	70	69	68	69	Juli
August	08.8	14.4	16.8	18.6	17.9	17.0	23.2	7	11.4	31	10.1	10.7	10.8	10.4	72	68	72	72	August
September	06.3	9.9	12.1	14.9	12.8	12.7	19.6	15	6.9	25	7.7	8.7	7.8	8.0	73	69	72	72	September
Oktober	07.8	4.7	6.5	10.0	7.8	7.7	19.1	2	-2.3	19	5.5	6.2	5.6	5.8	75	67	70	71	Oktober
November	11.7	-1.1	0.4	2.7	1.2	1.2	11.5	21	-9.1	30	3.8	4.1	3.9	3.9	78	72	76	76	November
December	00.3	-5.3	-3.1	-1.5	-2.2	-2.5	5.3	6	-12.7	2	3.3	3.5	3.4	3.4	85	78	81	82	December
Jahr	1009.3	5.0	7.3	9.4	8.3	7.7	28.8		-12.7		6.2	6.8	6.4	6.4	74	71	72	73	Jahr

Torungen.

$\lambda = 8^0\ 48'$ E $= 35^m\ 12^s$ $\varphi = 58^0\ 24'$ N

Monat.	Luftdruck.	Min.	I	II	III	Mittel.	Max.	Dat.	Min.	Dat.	I	II	III	Mittel.	I	II	III	Mittel.	Monat.
Januar		1.9	3.6	4.7	4.0	3.9	10.5	7	-5.1	28									Januar
Februar		0.2	1.7	3.3	2.6	2.3	7.5	5	-7.0	21									Februar
März		-2.6	-0.6	2.8	1.4	0.7	9.9	19	-8.9	14									März
April		2.4	5.2	7.2	6.8	5.6	11.9	27	-5.0	4									April
Mai		7.4	9.6	11.0	11.2	9.8	15.5	19	3.4	3									Mai
Juni		10.5	13.9	16.4	16.0	14.1	27.9	11	7.0	2									Juni
Juli		15.6	18.4	21.0	21.0	19.0	27.9	24	12.1	9									Juli
August		13.9	16.2	19.0	17.9	16.9	23.0	6	10.0	15									August
September		9.5	11.9	14.6	13.0	12.5	17.5	15	6.0	25									September
Oktober		5.0	6.6	10.0	7.9	7.8	17.5	6	-2.5	20									Oktober
November		-0.6	0.8	3.5	1.9	1.9	11.3	20	-8.2	30									November
December		-4.5	-2.0	-0.6	-1.6	-1.6	6.9	6	-12.4	16									December
Jahr		4.9	7.1	9.4	8.5	7.7	27.9		-12.4										Jahr

Grimstad.

$\lambda = 8^0\ 36'$ E $= 34^m\ 24^s$ $\varphi = 58^0\ 20'$ N

Monat.	Luftdruck.	Min.	I	II	III	Mittel.	Max.	Dat.	Min.	Dat.	I	II	III	Mittel.	I	II	III	Mittel.	Monat.
Januar		1.0	3.2	4.7	3.6	3.6	10.6	7	-4.6	28	4.8	5.1	4.8	4.9	81	78	79	80	Januar
Februar		-0.5	1.6	3.5	2.5	2.2	7.6	3	-6.6	21	4.4	4.8	4.7	4.6	84	81	85	84	Februar
März		-3.0	-0.6	3.5	1.2	0.8	10.3	31	-9.6	15	3.4	3.8	3.5	3.5	73	61	66	68	März
April		1.9	6.1	9.1	7.1	6.2	13.5	27	-1.9	5	5.0	5.5	5.1	5.1	70	62	66	68	April
Mai		7.0	10.4	12.3	11.4	10.3	16.9	17	2.0	4	7.4	8.0	7.4	7.5	78	75	73	75	Mai
Juni		9.9	14.9	17.2	16.2	14.4	29.6	11	6.3	3	8.6	9.0	9.0	8.8	68	63	66	68	Juni
Juli		14.5	20.0	21.9	19.2	18.9	28.2	23	11.2	1	12.3	12.1	10.2	11.4	72	64	62	67	Juli
August		12.6	16.2	18.7	17.2	16.3	22.9	7	8.9	31	10.2	10.4	10.4	10.2	75	66	72	73	August
September		8.1	11.7	14.9	12.0	12.1	19.4	15	5.0	25	7.9	8.7	8.0	8.1	78	69	77	76	September
Oktober		4.0	6.5	10.3	7.5	7.6	18.2	2	-3.8	20	5.6	5.7	5.6	5.6	77	61	70	71	Oktober
November		-1.1	0.8	3.7	1.5	1.7	11.9	20	-8.3	30	3.9	4.0	3.8	3.9	77	65	73	73	November
December		-5.4	-2.5	-0.8	-2.2	-2.0	6.2	6	-13.7	16	3.3	3.6	3.2	3.4	82	77	78	79	December
Jahr		4.1	7.4	9.9	8.1	7.7	29.6		-13.7		6.4	6.7	6.3	6.4	76	68	72	74	Jahr

1925.

Jomfruland.

H = 17 m h_t = 2.2 m h_r = 1.6 m

Monat.	Bewölkung. I	II	III	Mittel.	Niederschlag. Summe.	Zahl der Tage mit Niederschlag.	≥ 0.1 mm.	≥ 1.0 mm.	Schnee, ≥ 0.1 mm.	Hagel.	Nebel.	Heiter.	Trübe.	Gewitter.	Sturm.	Vindverteilung. N	NE	E	SE	S	SW	W	NW	C	Windstärke. Mittel.	Monat.
Januar . . .	6.1	6.1	4.6	5.6	49.0	11	8	7	2	1	7	6	7	0	1	14	5	0	0	3	33	25	10	3	2.8	Januar
Februar . .	7.2	7.3	6.8	7.1	121.5	18	17	14	8	1	1	4	14	0	1	4	19	5	11	5	21	12	5	2	3.4	Februar
März	5.2	4.7	5.1	5.0	33.2	14	7	6	6	0	1	7	9	0	0	20	17	2	4	10	18	9	13	0	2.3	März
April	4.7	4.1	4.8	4.5	28.4	10	10	7	2	0	1	9	6	0	0	11	15	5	9	9	23	5	7	6	2.0	April
Mai	7.6	6.3	6.4	6.8	124.9	18	15	13	0	0	1	4	13	2	0	6	27	14	10	9	21	2	1	3	2.3	Mai
Juni	4.9	4.9	4.8	4.9	25.2	10	5	4	0	0	5	4	5	4	0	12	15	7	4	5	33	6	6	2	2.4	Juni
Juli	5.0	4.2	4.5	4.6	13.1	9	5	4	0	0	0	7	3	5	0	2	18	8	7	12	34	7	2	3	1.9	Juli
August . . .	6.1	5.7	6.2	6.0	45.0	14	11	8	0	0	0	2	6	3	0	6	10	9	9	4	35	9	8	3	2.4	August
September .	5.4	5.8	5.1	5.4	61.6	12	9	8	0	0	0	2	4	2	0	10	10	2	8	11	26	9	13	1	2.7	September
Oktober . .	6.0	5.9	5.6	5.8	103.6	12	10	9	0	1	0	7	10	0	0	7	14	7	3	12	19	13	17	1	3.1	Oktober
November .	6.3	5.6	5.3	5.7	57.1	11	9	5	4	0	2	6	10	0	0	16	28	4	5	0	9	10	15	3	2.4	November
December .	6.3	6.1	5.6	6.0	75.2	15	13	10	10	0	4	5	9	0	0	21	22	3	4	6	8	14	11	4	2.6	December
Jahr	5.9	5.6	5.4	5.6	737.8	154	119	95	32	3	22	63	96	16	2	129	200	66	74	86	280	121	108	31	2.5	Jahr

Lyngør.

H = 4 m, H_b = 6.8 m h_t = 1.8 m h_r = 1.6 m

Januar . . .	6.5	6.0	4.5	5.7	15.1	8	8	5	2	0	0	5	8	0	0	4	7	6	2	1	12	39	11	11	2.5	Januar
Februar . .	6.1	7.0	6.4	6.5	105.6	16	16	11	8	0	0	4	12	0	0	2	8	17	10	4	9	20	5	9	3.3	Februar
März	4.5	4.7	4.8	4.7	17.4	8	5	3	3	0	0	10	8	0	0	9	18	15	3	4	12	14	11	7	2.5	März
April	4.2	4.4	4.3	4.3	19.9	11	11	5	0	0	0	10	4	0	0	2	9	22	3	4	21	11	6	12	2.2	April
Mai	6.8	5.8	5.5	6.0	96.3	16	15	12	0	0	0	5	11	0	0	1	9	36	11	8	16	6	1	5	2.9	Mai
Juni	5.0	4.4	4.0	4.5	42.1	8	7	6	0	1	0	8	3	0	0	10	6	19	4	5	27	9	6	4	2.8	Juni
Juli	4.5	3.8	3.6	4.0	30.0	9	8	6	0	0	0	9	6	1	0	3	3	24	8	10	30	7	2	6	2.3	Juli
August . . .	5.5	5.8	5.8	5.7	60.3	12	10	8	0	0	0	3	10	0	0	4	5	16	8	3	26	15	10	6	2.8	August
September .	5.2	5.3	5.1	5.2	46.3	15	14	6	0	0	0	6	4	0	0	6	11	10	3	10	15	19	10	6	2.8	September
Oktober . .	6.0	5.6	5.5	5.7	99.1	10	10	7	0	1	0	9	11	0	0	10	9	10	4	8	13	18	15	6	2.9	Oktober
November .	5.4	5.7	5.4	5.5	68.1	8	8	5	3	0	0	7	9	0	0	12	23	12	5	0	6	14	9	9	2.6	November
December .	5.4	5.7	5.5	5.5	68.6	13	13	9	10	0	0	8	10	0	1	15	22	4	4	7	8	11	10	12	2.2	December
Jahr	5.4	5.4	5.0	5.3	668.8	134	125	83	26	2	0	84	96	1	1	78	130	191	65	64	195	183	96	93	2.6	Jahr

Torungen.

H = 10 m h_t = 1.6 m

Januar . . .	7.2	7.3	5.2	6.6		13			2	0	3	2	14	0	0	14	12	2	1	3	25	30	6	0	3.8	Januar
Februar . .	8.1	8.2	7.0	7.8		23			13	3	1	2	17	1	2	7	12	8	12	11	11	19	4	0	4.4	Februar
März	5.1	5.1	5.1	5.1		15			11	0	1	9	9	0	0	16	16	9	4	8	13	15	12	0	2.7	März
April	4.1	4.7	4.7	4.5		7			0	1	2	8	4	0	0	7	21	15	2	4	29	7	5	0	2.1	April
Mai	6.5	5.7	5.4	5.9		10			0	1	5	5	9	0	0	7	8	39	5	8	22	3	1	0	2.5	Mai
Juni	4.8	4.5	4.7	4.7		6			0	0	2	4	2	1	0	4	8	17	1	9	31	9	11	0	2.0	Juni
Juli	4.7	4.2	4.0	4.3		8			0	0	1	8	6	3	0	4	9	24	6	14	23	6	4	3	2.0	Juli
August . . .	5.3	6.4	5.9	5.9		16			0	0	1	4	9	2	0	2	7	12	5	8	30	22	6	1	2.9	August
September .	4.9	5.7	5.5	5.4		14			0	0	1	4	6	1	0	8	7	13	8	10	21	13	10	0	2.8	September
Oktober . .	6.1	6.3	5.8	6.1		14			3	0	2	7	11	0	0	8	7	7	5	12	14	18	19	3	3.6	Oktober
November .	6.0	5.9	6.0	6.0		14			6	1	1	4	9	0	0	20	15	7	4	1	6	20	17	0	3.3	November
December .	6.1	5.9	5.8	5.9		13			11	0	3	6	10	0	0	26	16	1	6	3	9	18	14	0	2.9	December
Jahr	5.7	5.8	5.4	5.7		153			46	6	23	63	106	8	2	123	138	154	59	91	234	180	109	7	2.9	Jahr

Grimstad.

H = 7 m h_t = 4.1 m h_r = 1.3 m

Januar . . .	6.8	7.1	5.7	6.5	67.3	15	12	9	1	1	1	3	13	1	1	2	22	3	1	3	14	37	10	1	3.2	Januar
Februar . .	7.5	8.3	6.9	7.6	185.4	24	23	19	8	1	0	2	16	0	2	3	12	14	10	7	8	22	5	3	3.8	Februar
März	4.9	4.9	5.0	4.9	28.3	10	8	5	3	1	0	7	7	0	0	6	23	13	4	6	11	16	11	3	2.7	März
April	4.4	4.2	4.5	4.4	47.0	10	9	9	1	1	0	8	6	0	0	2	17	17	9	5	15	14	9	2	3.0	April
Mai	7.0	5.5	4.5	5.7	162.5	14	13	10	0	0	0	7	10	0	0	0	19	32	13	5	16	7	1	0	3.3	Mai
Juni	4.4	3.9	4.1	4.1	39.2	11	9	5	0	0	2	9	4	1	0	5	8	14	4	6	31	8	11	3	3.1	Juni
Juli	4.3	4.5	3.7	4.2	54.9	10	9	6	0	0	0	9	3	2	0	2	6	23	9	12	28	5	5	3	2.6	Juli
August . . .	4.9	5.9	5.4	5.4	88.2	16	15	12	0	0	0	4	8	0	0	4	10	10	3	7	25	19	15	0	3.2	August
September .	5.3	5.6	5.7	5.5	91.5	14	10	9	0	2	0	4	5	3	0	5	14	7	5	5	15	26	11	2	3.0	September
Oktober . .	6.1	6.1	4.9	5.7	152.0	14	14	12	2	3	2	8	10	1	0	7	15	6	7	6	12	15	24	1	3.2	Oktober
November .	5.1	5.3	6.0	5.5	95.3	13	12	6	5	0	1	5	9	0	0	7	33	8	6	0	4	18	11	3	2.9	November
December .	5.2	5.7	5.3	5.4	135.8	16	15	11	12	0	2	7	9	1	1	8	34	6	8	0	6	17	13	1	2.9	December
Jahr	5.5	5.6	5.1	5.4	1147.4	167	159	113	32	9	8	73	100	9	4	51	213	153	79	62	185	204	126	22	3.1	Jahr

Mykland.

$\lambda = 8^0\ 17'$ E $= 33^m\ 8^s$ $\varphi = 58^0\ 38'$ N

Monat.	Luftdruck. (Normalschwere. Mittel.	Luft-Temperatur. Min.	I	II	III	Mittel.	beobachtetes Max.	Dat.	Min.	Dat.	Absolute Feuchtigkeit. I	II	III	Mittel.	Relat. Feuchtigk. I	II	III	Mittel.	Monat.
Januar		-1.9	0.8	2.3	1.3	1.3	8.2	7	-10.2	27	4.1	4.3	3.9	4.1	82	77	76	78	Januar
Februar		-3.6	-1.1	-0.9	-0.4	-1.1	6.0	3	-12.0	21	3.7	3.6	3.8	3.7	81	80	81	81	Februar
März		-6.9	-3.5	1.4	-0.7	-1.7	7.2	19	-15.8	11	2.8	3.3	3.1	3.0	72	63	65	68	März
April		0.0	3.9	7.3	5.0	4.3	12.0	12	-4.6	4	4.4	4.7	4.3	4.4	70	61	64	67	April
Mai		5.1	9.0	12.0	10.6	9.1	22.0	20	-0.6	4	6.8	7.2	6.4	6.7	78	70	68	74	Mai
Juni		8.6	14.2	18.2	16.4	14.2	29.3	10	1.2	14	7.7	8.0	7.8	7.7	64	53	57	64	Juni
Juli		12.6	18.1	22.3	20.2	18.3	29.8	23	8.4	30	10.4	9.8	8.9	9.6	68	50	52	62	Juli
August		10.5	14.2	17.4	15.4	14.5	22.6	6	7.6	16	9.1	9.1	8.7	8.9	76	62	67	72	August
September		5.6	8.7	12.8	9.6	9.5	17.4	15	0.3	14	7.1	7.2	6.8	6.9	84	66	75	78	September
Oktober		1.0	3.7	7.6	4.9	4.8	15.2	2	-9.5	20	4.9	5.2	4.8	5.0	79	65	71	73	Oktober
November		-4.9	-2.4	0.8	-0.9	-1.2	10.3	20	-12.9	30	3.4	3.6	3.5	3.5	81	72	76	77	November
December		-9.5	-5.6	-3.4	-4.9	-4.8	6.5	6	-19.7	16	2.9	3.1	2.9	3.0	86	80	83	83	December
Jahr		1.4	5.0	8.2	6.4	5.6	29.8		-19.7		5.6	5.8	5.4	5.5	77	67	70	73	Jahr

Austad.

$\lambda = 7^0\ 40'$ E $= 30^m\ 40^s$ $\varphi = 58^0\ 58'$ N

Januar		-2.3	0.0	1.6	0.2	0.4	9.0	11	-9.8	28	3.7	3.8	3.7	3.7	76	71	77	76	Januar
Februar		-3.6	-0.8	0.9	-0.6	-0.5	5.0	5	-12.0	8	3.7	3.8	3.9	3.8	79	76	83	80	Februar
März		-6.6	-4.0	1.6	-1.3	-1.9	7.5	18	-14.5	14	2.6	3.3	3.2	2.9	70	60	70	68	März
April		-1.8	0.4	7.8	3.7	2.8	12.0	11	-4.7	9	3.5	4.3	4.0	3.8	72	55	66	69	April
Mai		3.4	6.7	13.6	9.3	8.3	22.0	20	-1.9	4	5.9	7.3	6.4	6.4	80	63	72	79	Mai
Juni		7.5	12.0	19.4	16.5	13.7	32.0	10	2.2	15	7.0	7.8	7.7	7.4	67	48	56	67	Juni
Juli		11.5	15.1	23.6	20.7	17.6	29.7	22	7.6	31	9.6	10.2	10.2	9.9	75	48	57	70	Juli
August		9.6	13.6	18.6	15.4	14.5	23.0	8	5.4	16	8.5	9.7	8.8	8.9	73	61	68	70	August
September		4.3	7.7	13.3	10.2	9.2	17.3	8	1.2	14	6.3	6.9	6.6	6.5	79	61	71	73	September
Oktober		-0.4	2.1	7.1	3.6	3.6	16.0	1	-9.8	20	4.0	4.7	4.6	4.4	73	61	77	72	Oktober
November		-4.9	-2.5	-0.2	-2.3	-2.0	11.0	20	-15.3	30	3.1	3.3	3.2	3.2	74	69	77	74	November
December		-12.2	-8.4	-6.1	-7.7	-7.6	6.2	6	-23.3	16	2.3	2.6	2.4	2.4	81	77	82	80	December
Jahr		0.4	3.5	8.4	5.6	4.8	32.0		-23.3		5.0	5.6	5.4	5.3	75	62	71	73	Jahr

Byglandsfjord.

$\lambda = 7^0\ 48'$ E $= 31^m\ 12^s$ $\varphi = 58^0\ 40'$ N $C_g = 1.15$ mb bei 967 mb

Januar	989.6	-2.1	0.6	1.9	1.0	1.0	8.5	7	-10.2	28	4.1	4.2	4.0	4.1	82	78	80	80	Januar
Februar	76.2	-3.6	-0.9	1.1	-0.6	-0.4	5.8	5	-11.5	21	3.8	4.1	3.9	3.9	84	80	85	84	Februar
März	87.9	-6.9	-3.9	1.7	-0.8	-1.8	7.5	19	-15.2	13	2.8	3.3	3.0	2.9	76	61	66	69	März
April	85.3	-1.2	2.5	7.3	4.8	3.6	12.5	11	-7.6	4	4.1	4.5	4.2	4.2	73	59	64	68	April
Mai	87.0	3.9	8.1	12.4	11.1	8.9	21.9	20	-3.2	4	6.3	6.8	6.4	6.4	76	63	64	72	Mai
Juni	87.7	8.2	13.3	18.8	17.4	14.3	30.1	10	0.9	4	7.4	8.2	7.9	7.7	65	51	54	62	Juni
Juli	88.5	11.1	16.9	23.4	21.7	18.3	32.1	23	6.4	30	9.6	9.4	9.4	9.4	68	45	50	62	Juli
August	84.8	9.3	13.6	17.8	15.7	14.2	23.4	6	6.1	21	9.1	9.1	8.9	8.9	79	61	67	73	August
September	82.0	5.0	8.4	13.3	9.9	9.5	17.0	15	-1.0	14	7.0	7.3	6.9	7.0	83	64	74	77	September
Oktober	83.3	0.2	3.0	7.7	4.8	4.6	15.7	2	-10.8	20	4.7	5.2	4.8	4.9	81	65	72	74	Oktober
November	86.9	-5.1	-2.2	0.5	-1.3	-1.4	9.7	20	-12.9	28	3.3	3.5	3.3	3.4	80	71	76	77	November
December	75.4	-10.3	-6.3	-4.6	-6.3	-5.9	7.5	6	-19.7	2	2.8	2.9	2.7	2.8	86	82	84	84	December
Jahr	984.6	0.7	4.4	8.4	6.4	5.4	32.1		-19.7		5.4	5.7	5.4	5.5	78	65	70	74	Jahr

Hægeland.

$\lambda = 7^0\ 46'$ E $= 31^m\ 4^s$ $\varphi = 58^0\ 25'$ N

Januar		-1.8	0.8	2.4	1.5	1.4	7.1	18	-9.0	27	4.4	4.8	4.6	4.6	88	87	87	87	Januar
Februar		-3.0	-0.7	1.2	-0.1	-0.2	6.1	5	-10.0	21	4.2	4.4	4.3	4.3	90	85	88	88	Februar
März		-8.4	-5.2	1.7	-1.3	-2.4	6.0	19	-17.0	11	3.0	3.5	3.2	3.1	87	64	70	76	März
April		-1.9	2.2	7.7	4.8	3.5	12.0	12	-5.0	4	4.5	4.5	4.3	4.3	81	57	66	73	April
Mai		3.4	8.6	12.4	10.7	8.8	21.5	20	-1.5	4	6.7	7.2	6.6	6.7	79	67	69	76	Mai
Juni		7.1	13.7	18.4	16.0	13.6	29.0	10	3.0	2	7.8	8.7	8.2	8.1	67	56	61	67	Juni
Juli		9.4	17.3	22.5	19.7	17.3	29.1	23	6.0	1	10.2	11.2	9.7	10.3	70	56	57	65	Juli
August		9.4	13.9	17.5	14.8	14.2	21.8	8	4.5	16	9.6	9.4	9.1	9.3	81	64	73	77	August
September		4.5	8.8	13.3	8.8	9.4	16.0	15	-1.0	28	7.3	7.7	7.0	7.2	85	67	82	81	September
Oktober		0.1	3.2	8.1	4.3	4.5	16.0	2	-11.0	19	5.1	5.5	4.9	5.2	86	67	77	79	Oktober
November		-6.1	-3.2	0.6	-1.7	-1.8	8.0	20	-18.5	30	3.4	3.6	3.5	3.5	87	72	79	81	November
December		-11.7	-7.7	-4.3	-6.7	-6.4	6.0	6	-22.0	2	2.7	3.0	2.8	2.8	89	85	88	87	December
Jahr		0.1	4.3	8.5	5.9	5.2	29.1		-22.0		5.7	6.1	5.7	5.8	82	69	75	78	Jahr

1925.

Mykland.

H = 280 m h_t = 2.5 m h_r = 1.3 m

Monat.	Bewölkung. I	II	III	Mittel.	Niederschlag. Summe.	Zahl der Tage mit Niederschlag.	≥0.1 mm.	≥1.0 mm.	Schnee. ≥0.1 mm.	Hagel.	Nebel.	Heiter.	Trübe.	Gewitter.	Sturm.	Windverteilung. N	NE	E	SE	S	SW	W	NW	C	Windstärke. Mittel.	Monat.
Januar . . .	6.3	7.4	6.2	6.6	74.9	16	12	10	5	0	0	6	13	0	0	1	4	4	1	3	26	19	7	28	2.4	Januar
Februar . .	7.8	8.5	6.5	7.6	203.1	21	19	19	17	0	0	1	16	0	0	1	8	17	4	5	11	10	10	18	2.8	Februar
März	4.5	5.0	4.9	4.8	47.6	10	8	5	7	0	0	9	8	0	0	2	13	3	4	0	10	7	35	19	2.3	März
April	4.9	5.8	4.3	5.0	63.1	13	12	10	5	2	0	9	8	0	0	2	18	6	7	9	16	10	19	3	2.9	April
Mai	7.3	6.8	6.0	6.7	161.2	18	14	11	0	0	0	6	16	0	0	0	9	20	26	13	10	3	7	5	2.9	Mai
Juni	4.8	4.5	4.9	4.7	55.1	10	8	6	0	0	0	8	7	2	0	2	8	4	13	8	13	20	8	14	2.8	Juni
Juli	4.5	5.0	3.6	4.4	73.8	14	11	9	0	0	0	8	4	5	0	2	5	9	25	13	15	2	6	16	2.5	Juli
August . . .	5.4	6.9	6.1	6.1	79.9	19	14	12	0	0	0	4	11	2	0	0	2	10	7	2	10	10	24	28	2.3	August
September .	5.3	6.8	5.6	5.9	123.5	18	14	12	0	0	0	3	8	2	0	2	2	2	5	4	13	7	22	33	2.3	September
Oktober . .	6.0	5.6	4.8	5.5	171.5	13	12	11	4	0	0	10	10	1	0	1	8	7	3	3	10	5	33	23	2.4	Oktober
November .	5.3	5.2	4.7	5.1	80.8	9	8	6	6	0	0	9	7	0	0	4	8	9	0	0	0	10	16	43	1.5	November
December .	5.0	5.7	5.5	5.4	77.1	11	10	10	9	0	0	8	9	0	0	1	8	6	0	0	1	10	12	55	1.1	December
Jahr	5.6	6.1	5.3	5.6	1211.6	172	142	121	53	2	0	81	117	12	0	18	93	97	95	60	135	113	199	285	2.4	Jahr

Austad.

H = 240 m h_t = 2.1 m h_r = 1.3 m

Monat.	I	II	III	Mittel.	Niederschlag. Summe.	Niederschlag.	≥0.1 mm.	≥1.0 mm.	Schnee. ≥0.1 mm.	Hagel.	Nebel.	Heiter.	Trübe.	Gewitter.	Sturm.	N	NE	E	SE	S	SW	W	NW	C	Windstärke. Mittel.	Monat.
Januar . . .	6.5	6.7	5.9	6.4	129.4	9	9	9	7	0	0	1	9	0	0	11	13	3	1	0	8	25	32	0	1.5	Januar
Februar . .	8.2	8.0	7.4	7.9	164.9	20	20	20	18	0	0	1	17	0	0	6	9	15	18	0	8	15	13	0	1.0	Februar
März	3.8	4.6	4.0	4.1	21.8	4	4	4	4	0	0	11	4	0	0	37	7	3	5	8	3	6	24	0	1.2	März
April	4.9	4.2	3.8	4.3	59.8	8	7	7	3	0	0	8	5	0	0	35	1	2	11	4	5	4	28	0	0.8	April
Mai	6.8	6.5	6.3	6.5	147.0	15	14	14	0	0	0	4	13	0	0	11	3	9	24	2	17	8	19	0	0.7	Mai
Juni	3.7	4.3	4.6	4.2	20.6	5	5	5	0	0	0	5	1	0	0	20	20	6	1	1	2	8	32	0	1.2	Juni
Juli	3.4	4.5	4.2	4.0	97.5	10	10	8	0	0	1	7	1	0	0	26	6	10	16	11	10	2	12	0	0.8	Juli
August . . .	5.7	6.0	6.0	5.9	63.9	16	15	12	0	0	0	4	10	0	0	15	1	2	19	4	14	3	35	0	1.3	August
September .	5.1	6.0	6.2	5.8	105.3	9	8	8	0	0	0	3	5	0	0	11	6	6	9	2	7	10	39	0	1.0	September
Oktober . .	5.5	5.3	5.4	5.4	178.2	12	12	12	3	0	0	8	10	0	0	35	4	2	20	4	8	2	18	0	1.0	Oktober
November .	4.4	4.8	4.1	4.4	25.0	5	5	5	3	0	0	5	5	0	0	36	11	9	1	0	0	0	33	0	0.6	November
December .	5.1	4.4	4.5	4.7	69.4	12	12	11	12	0	0	7	8	0	0	38	17	3	5	0	0	8	22	0	0.4	December
Jahr	5.3	5.4	5.2	5.3	1082.8	125	121	115	50	0	1	64	88	0	0	281	98	70	130	36	82	91	307	0	1.0	Jahr

Byglandsfjord.

H = 206 m, H_b = 209.7 m h_t = 2.1 m h_r = 1.3 m

Monat.	I	II	III	Mittel.	Niederschlag. Summe.	Niederschlag.	≥0.1 mm.	≥1.0 mm.	Schnee. ≥0.1 mm.	Hagel.	Nebel.	Heiter.	Trübe.	Gewitter.	Sturm.	N	NE	E	SE	S	SW	W	NW	C	Windstärke. Mittel.	Monat.
Januar . . .	7.0	7.8	6.4	7.1	139.0	22	18	12	9	1	5	2	13	0	0	6	2	0	28	12	4	0	41	0	2.1	Januar
Februar . .	8.5	8.6	7.3	8.1	255.3	26	25	23	23	0	4	1	16	0	0	5	6	1	31	8	3	2	28	0	2.4	Februar
März	4.8	5.1	5.8	5.2	40.9	17	8	5	8	1	1	5	7	0	0	10	5	0	9	6	6	3	54	0	2.2	März
April	4.9	5.2	5.6	5.2	98.1	15	13	10	7	0	6	7	7	0	0	8	4	6	16	5	5	1	45	0	2.3	April
Mai	7.2	7.0	6.3	6.8	163.0	19	16	12	0	0	8	3	16	0	0	15	9	1	19	17	4	0	28	0	2.2	Mai
Juni	5.4	6.1	5.5	5.7	31.8	15	9	6	0	0	0	5	7	0	0	9	11	4	13	9	2	2	40	0	2.7	Juni
Juli	3.9	6.2	5.3	5.1	74.2	13	9	7	0	0	0	2	5	0	0	7	6	2	35	15	1	1	26	0	2.3	Juli
August . . .	6.3	7.6	6.8	6.9	119.1	18	17	15	0	0	8	0	13	0	0	5	6	2	44	4	2	4	26	0	2.4	August
September .	6.3	7.3	7.0	6.9	126.7	20	14	8	0	0	6	1	9	0	0	2	3	1	30	8	5	0	41	0	2.2	September
Oktober . .	6.7	6.5	5.7	6.3	164.8	18	14	11	6	1	5	3	12	0	0	9	0	1	13	14	5	8	43	0	2.3	Oktober
November .	5.7	6.0	4.2	5.3	46.6	14	8	6	3	0	3	4	5	0	0	14	0	0	5	12	3	6	50	0	2.1	November
December .	4.9	5.8	5.3	5.3	90.6	20	15	12	15	1	3	10	9	0	0	9	2	0	7	13	7	7	48	0	2.0	December
Jahr	6.0	6.6	5.9	6.2	1350.1	217	166	127	71	4	49	43	119	0	0	99	54	18	250	123	47	34	470	0	2.3	Jahr

Hægeland.

H = 174 m h_t = 1.4 m h_r = 1.4 m

Monat.	I	II	III	Mittel.	Niederschlag. Summe.	Niederschlag.	≥0.1 mm.	≥1.0 mm.	Schnee. ≥0.1 mm.	Hagel.	Nebel.	Heiter.	Trübe.	Gewitter.	Sturm.	N	NE	E	SE	S	SW	W	NW	C	Windstärke. Mittel.	Monat.
Januar . . .	7.2	7.8	5.7	6.9	142.0	17	17	12	6	0	1	3	14	0	0	0	5	18	2	15	19	19	1	14	1.2	Januar
Februar . .	8.4	8.7	7.1	8.1	274.0	25	25	23	17	0	1	1	17	0	0	5	5	31	0	8	25	8	0	2	1.6	Februar
März	4.8	4.5	4.5	4.6	37.9	8	8	5	5	0	0	12	9	0	0	2	5	33	0	2	5	23	2	21	0.9	März
April	3.7	4.6	4.4	4.2	100.2	12	11	10	5	0	0	10	6	0	0	5	1	23	1	4	10	31	1	14	1.0	April
Mai	6.5	6.1	5.6	6.1	185.2	16	16	11	0	0	0	7	12	0	0	1	5	45	4	6	8	18	2	4	1.1	Mai
Juni	3.4	3.9	4.1	3.8	32.0	12	11	9	0	0	0	12	5	3	0	5	3	23	1	6	9	30	6	7	1.4	Juni
Juli	3.3	4.1	2.8	3.4	74.5	7	7	7	0	1	0	11	2	4	0	2	1	33	1	6	2	42	1	5	1.4	Juli
August . . .	5.0	5.9	5.3	5.4	116.8	16	16	16	0	0	0	5	9	0	0	3	3	23	1	5	8	35	5	10	1.3	August
September .	4.6	5.8	5.5	5.3	149.8	17	17	12	0	0	0	3	5	3	0	0	4	20	0	3	6	37	3	17	1.2	September
Oktober . .	5.8	5.2	5.0	5.3	204.0	14	13	10	1	0	0	8	9	1	0	2	7	14	4	9	12	16	1	28	1.1	Oktober
November .	5.9	4.8	4.2	5.0	78.0	11	11	8	5	0	0	5	6	0	0	4	11	14	2	0	5	17	3	34	0.7	November
December .	5.3	5.9	5.6	5.6	118.3	13	13	12	12	0	0	8	13	0	0	2	3	22	1	2	2	9	1	51	0.6	December
Jahr	5.3	5.6	5.0	5.3	1512.7	168	165	135	51	1	2	85	107	11	0	31	53	299	17	66	111	285	26	207	1.1	Jahr

Eg.

$\lambda = 7^0\ 59'\,E = 31^m\ 56^s$ $\varphi = 58^0\ 10'\,N$

Monat.	Luftdruck. (Normalschwere). Mittel.	Luft-Temperatur. Min.	I	II	III	Mittel.	beobachtetes Max.	Dat.	Min.	Dat.	Absolute Feuchtigkeit. I	II	III	Mittel.	Relat. Feuchtigk. I	II	III	Mittel	Monat.
Januar		0.6	2.9	4.3	3.1	3.2	9.5	7	-4.1	21	5.1	5.5	5.0	5.2	88	86	87	87	Januar
Februar . . .		-0.8	1.3	3.2	2.1	1.9	7.5	5	-6.8	21	4.6	5.1	4.8	4.8	88	87	88	88	Februar
März		-3.6	-1.1	3.2	0.6	0.4	10.1	19	-10.1	11	3.7	4.3	3.8	3.8	81	73	76	78	März
April		1.1	5.4	9.0	6.7	5.8	13.1	27	-2.9	4	5.4	6.1	5.4	5.5	78	70	73	75	April
Mai		6.1	10.4	12.5	11.6	10.2	19.3	20	0.2	4	7.7	8.3	7.7	7.8	82	77	76	79	Mai
Juni		8.9	15.1	17.8	15.5	14.2	27.9	11	5.3	3	9.6	10.5	9.4	9.7	75	69	72	76	Juni
Juli		12.6	19.0	22.0	20.2	18.4	27.5	22	7.8	1	12.5	13.2	12.0	12.5	77	68	69	74	Juli
August		11.5	15.8	18.8	16.8	15.9	24.1	6	6.9	31	10.7	11.9	10.5	10.9	81	74	75	78	August
September . .		7.4	10.6	14.3	10.7	11.2	18.1	6	2.5	28	7.9	9.3	7.8	8.2	84	77	82	82	September
Oktober . . .		3.1	5.5	9.4	6.6	6.7	16.1	2	-6.4	20	5.7	6.7	5.8	6.1	83	75	78	79	Oktober
November . .		-2.3	-0.3	3.0	0.6	0.8	10.9	20	-8.5	11	3.9	4.5	4.1	4.2	84	78	81	82	November
December . .		-7.1	-3.8	-1.8	-3.4	-3.2	7.3	6	-16.1	3	3.2	3.6	3.3	3.4	88	84	86	86	December
Jahr		3.1	6.7	9.6	7.6	7.1	27.9		-16.1		6.7	7.4	6.6	6.8	82	76	79	80	Jahr

Oksø.

$\lambda = 8^0\ 4'\,E = 32^m\ 16^s$ $\varphi = 58^0\ 4'\,N$ $C_g = 1.15$ mb bei 984 mb

Monat.	Luftdruck. (Normalschwere). Mittel.	Luft-Temperatur. Min.	I	II	III	Mittel.	beobachtetes Max.	Dat.	Min.	Dat.	Absolute Feuchtigkeit. I	II	III	Mittel.	Relat. Feuchtigk. I	II	III	Mittel	Monat.
Januar	1014.9	2.8	4.4	5.1	4.5	4.6	9.9	7	-2.4	29	5.4	5.6	5.4	5.5	84	84	84	84	Januar
Februar . . .	00.7	1.2	2.8	3.6	3.2	3.0	7.5	5	-5.0	21	4.9	5.2	5.2	5.1	85	85	87	86	Februar
März	12.9	-2.2	-0.4	2.5	1.7	0.9	8.8	19	-7.4	12	3.4	3.7	3.5	3.4	70	65	65	67	März
April	09.7	3.0	5.2	7.1	6.8	5.7	10.2	27	-0.5	4	5.4	6.0	6.0	5.7	81	78	80	80	April
Mai	11.3	7.8	9.9	10.9	10.6	9.9	15.0	20	3.1	4	7.6	8.2	8.0	7.8	84	84	84	84	Mai
Juni	12.2	10.3	14.1	15.5	14.2	13.4	25.8	11	4.0	18	9.4	9.7	9.9	9.6	78	75	82	82	Juni
Juli	12.7	15.5	18.7	20.0	19.8	18.5	25.8	21	11.0	10	12.6	13.3	13.0	12.9	78	76	75	77	Juli
August	08.8	13.6	16.0	17.9	17.1	16.3	20.8	5	7.2	31	10.8	11.4	11.2	11.0	80	75	77	78	August
September . .	06.3	9.3	11.2	14.2	12.8	12.2	17.0	6	6.3	25	8.5	9.1	8.9	8.7	86	76	81	82	September
Oktober . . .	07.7	4.8	6.9	9.5	8.3	7.8	15.0	2	-2.6	19	6.4	6.9	6.4	6.5	82	76	77	79	Oktober
November . .	11.2	0.0	1.5	3.4	2.7	2.3	10.6	21	-6.5	30	4.2	4.7	4.6	4.5	76	76	77	77	November
December . .	999.8	-3.9	-1.4	-0.3	-0.5	-0.8	7.2	6	-10.8	16	3.5	3.7	3.7	3.6	78	77	78	78	December
Jahr	1009.0	5.2	7.4	9.1	8.4	7.8	25.8		-10.8		6.8	7.3	7.2	7.0	80	77	79	80	Jahr

Mandal.

$\lambda = 7^0\ 27'\,E = 29^m\ 48^s$ $\varphi = 58^0\ 2'\,N$ $C_g = 1.15$ mb bei 996 mb

Monat.	Luftdruck. (Normalschwere). Mittel.	Luft-Temperatur. Min.	I	II	III	Mittel.	beobachtetes Max.	Dat.	Min.	Dat.	Absolute Feuchtigkeit. I	II	III	Mittel.	Relat. Feuchtigk. I	II	III	Mittel	Monat.
Januar	1016.0	2.0	4.0	5.1	4.2	4.3	9.0	7	-2.9	20	5.0	5.1	5.1	5.1	80	77	80	80	Januar
Februar . . .	01.6	0.4	2.3	3.6	2.7	2.7	7.3	12	-6.2	21	4.6	4.9	4.9	4.8	82	82	86	84	Februar
März	13.9	-2.5	-0.5	3.3	1.5	1.0	8.3	19	-9.4	11	3.5	4.1	3.8	3.7	73	68	69	70	März
April	10.5	2.0	5.9	8.9	7.3	6.3	13.6	12	-1.4	5	4.9	5.2	5.1	5.0	69	62	66	67	April
Mai	11.9	7.1	10.5	12.5	11.3	10.4	17.3	18	1.3	1	6.9	7.6	7.3	7.2	74	71	73	74	Mai
Juni	13.1	9.8	14.4	17.3	15.2	14.1	25.6	10	6.3	4	8.6	8.9	9.0	8.7	71	61	70	74	Juni
Juli	12.9	14.1	18.5	21.5	19.6	18.5	27.8	23	9.1	1	11.2	11.3	11.0	11.1	71	60	65	69	Juli
August	09.6	12.0	15.5	18.1	16.2	15.6	21.0	5	7.9	15	10.3	10.3	10.3	10.2	79	67	75	77	August
September . .	07.3	8.1	10.5	14.0	11.6	11.4	17.4	7	4.1	13	7.9	8.2	8.3	8.0	83	69	81	80	September
Oktober . . .	08.7	3.4	5.6	9.4	7.3	7.0	14.7	2	-5.5	20	6.0	6.0	5.9	5.9	86	68	77	79	Oktober
November . .	12.3	-1.6	0.4	3.1	1.7	1.4	10.6	21	-7.9	28	4.1	4.1	4.3	4.2	81	69	80	78	November
December . .	00.8	-5.8	-2.5	-0.8	-2.0	-2.0	8.0	6	-13.9	3	3.4	3.7	3.5	3.5	83	79	81	81	December
Jahr	1009.9	4.1	7.0	9.7	8.0	7.6	27.8		-13.9		6.4	6.6	6.5	6.4	78	69	75	76	Jahr

Lillehavn.

$\lambda = 7^0\ 6'\,E = 28^m\ 24^s$ $\varphi = 58^0\ 0'\,N$

Monat.	Luftdruck. (Normalschwere). Mittel.	Luft-Temperatur. Min.	I	II	III	Mittel.	beobachtetes Max.	Dat.	Min.	Dat.	Absolute Feuchtigkeit. I	II	III	Mittel.	Relat. Feuchtigk. I	II	III	Mittel	Monat.
Januar		2.8	4.5	5.3	4.5	4.7	8.0	11	-1.4	28	5.4	5.4	5.3	5.4	84	80	82	82	Januar
Februar . . .		1.0	2.9	3.8	3.0	3.0	7.2	12	-5.0	20	4.9	5.1	5.0	5.0	85	83	87	85	Februar
März		-1.4	0.7	3.1	1.6	1.4	7.0	31	-6.6	12	3.7	4.2	3.9	3.8	71	71	74	72	März
April		3.6	6.3	8.0	6.8	6.4	13.0	27	-0.2	4	5.2	5.5	5.5	5.3	72	68	74	73	April
Mai		8.4	10.6	11.6	10.8	10.4	16.4	20	3.6	1	7.3	7.7	7.6	7.4	75	76	78	77	Mai
Juni		10.3	14.8	16.6	14.2	13.9	26.8	10	6.3	18	9.0	9.3	9.1	8.9	72	67	76	77	Juni
Juli		15.7	19.0	20.4	19.2	18.6	25.8	24	9.9	1	11.4	11.5	11.6	11.4	70	65	70	71	Juli
August		13.2	15.9	17.9	16.0	15.9	22.0	10	9.8	31	10.7	11.0	10.7	10.7	80	73	79	79	August
September . .		9.6	11.7	14.2	12.1	12.2	16.4	8	6.7	30	8.4	8.6	8.5	8.4	82	72	81	80	September
Oktober . . .		5.1	7.0	9.6	7.8	7.8	13.8	2	-1.6	19	6.3	6.6	6.3	6.4	83	74	80	80	Oktober
November . .		0.4	2.2	3.9	2.7	2.7	10.2	21	-5.9	30	4.4	4.7	4.5	4.5	80	75	79	79	November
December . .		-2.8	-0.5	0.7	-0.1	-0.1	6.5	6	-9.6	16	3.9	4.0	3.9	3.9	81	77	80	80	December
Jahr		5.5	7.9	9.6	8.2	8.1	26.8		-9.6		6.7	7.0	6.8	6.8	78	73	78	78	Jahr

1925.

Eg.

H = 22 m h_t = 1.7 m h_r = 1.4 m

Monat.	Bewölkung. I	II	III	Mittel.	Niederschlag. Summe.	Zahl der Tage mit Niederschlag.	≥ 0.1 mm.	≥ 1.0 mm.	Schnee. ≥ 0.1 mm.	Hagel.	Nebel.	Heiter.	Trübe.	Gewitter.	Sturm.	Windverteilung. N	NE	E	SE	S	SW	W	NW	C	Windstärke. Mittel.	Monat.
Januar . . .	7.6	7.5	6.2	7.1	112.4	17	16	11	4	1	2	2	13	1	0	18	18	3	3	11	6	3	12	19	2.0	Januar
Februar . .	7.8	8.2	7.4	7.8	204.4	26	25	22	12	2	0	2	16	0	1	12	8	12	7	17	7	4	6	11	2.4	Februar
März	4.7	5.2	4.5	4.8	30.9	13	10	4	9	1	2	9	9	0	0	33	14	0	4	10	1	0	11	20	1.6	März
April	4.3	4.8	4.6	4.6	68.2	12	8	6	0	0	1	9	7	0	0	15	11	4	11	17	8	3	9	12	2.0	April
Mai	6.5	6.3	5.1	6.0	164.9	17	15	12	0	0	0	5	8	0	0	8	11	18	13	23	8	2	3	7	2.6	Mai
Juni	4.8	4.0	4.3	4.4	33.7	10	9	5	0	0	2	10	5	1	0	13	11	8	6	20	10	2	10	10	2.5	Juni
Juli	4.0	4.2	3.8	4.0	36.3	7	7	6	0	0	0	8	5	1	0	7	3	12	17	24	3	5	7	15	2.0	Juli
August . . .	5.5	6.3	6.0	5.9	111.8	15	13	11	0	0	0	5	9	0	0	18	3	10	12	13	6	2	19	10	2.4	August
September .	5.3	5.5	5.7	5.5	114.5	20	18	11	0	0	1	2	4	2	0	20	4	1	5	17	8	6	13	16	1.9	September
Oktober . .	6.2	5.7	5.1	5.7	178.0	16	14	12	2	0	1	6	10	2	0	16	13	3	3	13	4	1	22	18	2.1	Oktober
November .	5.2	5.5	5.0	5.2	92.8	12	10	7	2	1	0	5	6	0	0	29	10	12	6	2	3	1	11	16	1.7	November
December .	5.9	5.7	4.9	5.5	127.3	18	18	12	14	0	4	7	9	0	0	34	11	7	2	3	2	0	7	27	1.4	December
Jahr	5.6	5.7	5.2	5.5	1275.2	183	163	119	43	5	13	70	101	7	1	223	117	90	89	170	66	29	130	181	2.0	Jahr

Oksø.

H = 8 m, H_b = 10.7 m h_t = 1.7 m h_r = 1.6 m

Monat.	I	II	III	Mittel.	Niederschlag. Summe.	Niederschlag.	≥ 0.1 mm.	≥ 1.0 mm.	Schnee.	Hagel.	Nebel.	Heiter.	Trübe.	Gewitter.	Sturm.	N	NE	E	SE	S	SW	W	NW	C	Windstärke. Mittel.	Monat.
Januar . . .	8.5	8.2	6.7	7.8	55.3	13	13	11	2	0	2	1	19	0	2	10	8	8	5	4	26	27	5	0	3.1	Januar
Februar . .	8.2	8.9	7.8	8.3	110.4	21	20	18	8	0	0	1	18	0	2	4	10	17	10	9	14	16	2	2	3.9	Februar
März	5.5	5.8	5.7	5.7	21.2	7	6	5	2	0	0	4	11	0	0	12	13	14	7	5	12	18	11	1	2.3	März
April	5.1	5.1	5.2	5.1	28.3	5	5	5	0	0	0	7	8	0	0	4	12	20	3	8	23	9	11	0	2.4	April
Mai	7.1	7.0	6.0	6.7	90.4	11	11	11	0	0	2	3	12	0	0	4	22	28	6	6	17	6	1	3	2.7	Mai
Juni	5.8	5.2	5.6	5.5	22.7	7	7	5	0	0	1	3	6	0	0	2	11	12	2	5	32	15	11	0	2.5	Juni
Juli	5.1	4.6	4.2	4.6	42.6	6	6	6	0	0	0	5	4	2	0	3	12	22	11	6	19	9	6	5	2.2	Juli
August . . .	5.9	5.9	6.2	6.0	61.7	10	9	8	0	0	0	3	8	0	0	2	6	12	5	6	25	27	9	1	2.8	August
September .	6.1	5.9	6.3	6.1	56.1	14	14	12	0	0	1	3	7	0	0	6	7	7	5	6	25	21	12	1	2.5	September
Oktober . .	6.4	6.0	5.9	6.1	100.4	11	11	10	0	0	2	4	11	0	0	6	7	6	7	10	14	21	20	2	2.9	Oktober
November .	6.3	6.0	5.6	6.0	76.0	7	7	6	1	0	0	3	6	0	0	24	14	6	3	0	11	20	7	5	2.7	November
December .	7.3	6.8	6.1	6.7	65.5	12	11	10	6	0	2	3	13	0	0	24	10	7	7	2	9	21	10	3	2.6	December
Jahr	6.4	6.3	5.9	6.2	730.6	124	120	107	19	0	10	40	123	2	4	101	132	159	71	67	227	210	105	23	2.7	Jahr

Mandal.

H = 7 m, H_b = 4.4 m h_t = 2.9 m h_r = 1.3 m

Monat.	I	II	III	Mittel.	Niederschlag. Summe.	Niederschlag.	≥ 0.1 mm.	≥ 1.0 mm.	Schnee.	Hagel.	Nebel.	Heiter.	Trübe.	Gewitter.	Sturm.	N	NE	E	SE	S	SW	W	NW	C	Windstärke. Mittel.	Monat.
Januar . . .	7.2	7.8	7.4	7.5	102.8	20	17	12	2	2	2	1	17	0	0	5	16	3	2	9	20	25	7	6	3.5	Januar
Februar . .	7.7	8.4	7.6	7.9	219.5	26	25	24	8	3	0	0	16	1	0	6	18	11	6	11	10	11	1	10	3.9	Februar
März	4.5	5.6	4.4	4.8	43.6	18	11	9	7	0	1	8	7	0	0	12	18	5	1	9	6	13	13	16	2.4	März
April	3.8	4.4	4.2	4.1	50.1	14	10	7	1	1	1	10	5	0	0	7	23	9	4	13	13	8	7	6	3.4	April
Mai	6.7	5.6	5.4	5.9	133.5	17	14	12	0	0	3	6	11	1	0	8	34	12	5	10	11	8	1	4	3.5	Mai
Juni	4.9	3.9	4.3	4.4	26.6	11	6	4	0	0	1	8	4	3	0	2	9	5	1	10	22	21	13	7	2.9	Juni
Juli	4.1	3.7	3.5	3.8	51.9	10	6	6	0	0	0	12	5	3	0	4	21	12	4	15	8	15	7	7	2.6	Juli
August . . .	5.8	5.6	5.7	5.7	168.0	16	15	12	0	0	0	7	11	0	0	4	10	7	3	8	17	26	15	3	3.1	August
September .	4.9	5.8	5.7	5.5	137.7	20	18	18	0	1	0	4	5	2	0	7	9	4	1	11	16	15	15	12	2.7	September
Oktober . .	6.2	6.0	4.8	5.7	124.3	18	16	13	2	0	0	5	9	1	0	8	10	5	6	8	4	22	13	17	2.6	Oktober
November .	5.5	5.8	4.4	5.2	77.2	18	12	8	1	0	0	5	5	0	0	20	18	4	1	1	2	12	8	24	2.2	November
December .	6.5	6.1	5.5	6.0	128.4	25	17	13	12	0	0	6	12	0	0	11	28	2	2	1	4	12	4	29	1.8	December
Jahr	5.6	5.7	5.2	5.5	1263.6	213	167	138	33	7	8	72	107	11	0	94	214	79	36	106	133	188	104	141	2.9	Jahr

Lillehavn.

H = 2 m h_t = 2.0 m h_r = 1.5 m

Monat.	I	II	III	Mittel.	Niederschlag. Summe.	Niederschlag.	≥ 0.1 mm.	≥ 1.0 mm.	Schnee.	Hagel.	Nebel.	Heiter.	Trübe.	Gewitter.	Sturm.	N	NE	E	SE	S	SW	W	NW	C	Windstärke. Mittel.	Monat.
Januar . . .	7.3	8.1	7.7	7.7	80.1	21	17	13	0	1	0	1	20	0	0	0	3	18	7	5	8	35	17	0	5.5	Januar
Februar . .	8.9	8.3	7.6	8.3	94.4	27	22	18	4	2	0	0	18	0	1	3	1	23	15	8	3	17	14	0	5.5	Februar
März	6.3	6.4	6.1	6.3	36.6	19	14	8	5	0	0	6	11	0	0	12	1	19	5	2	2	21	31	0	4.1	März
April	5.5	5.3	5.8	5.5	47.9	11	8	7	0	0	0	7	6	0	0	0	2	26	15	4	13	14	16	0	4.8	April
Mai	7.2	6.5	6.2	6.6	90.1	17	14	12	0	0	0	3	15	0	0	1	1	36	26	4	3	14	8	0	4.8	Mai
Juni	5.9	5.8	5.9	5.9	22.7	8	5	4	0	0	1	6	10	0	0	0	2	9	10	1	2	30	36	0	5.0	Juni
Juli	5.7	6.2	4.8	5.6	59.1	10	7	7	0	0	1	4	7	3	0	0	1	28	20	5	1	17	21	0	4.0	Juli
August . . .	7.5	6.6	6.9	7.0	134.0	18	15	12	0	0	0	2	12	0	0	0	0	14	12	5	4	28	30	0	5.5	August
September .	6.9	6.8	8.0	7.2	115.1	21	18	15	0	0	0	0	15	2	0	2	3	6	10	4	6	32	27	0	4.8	September
Oktober . .	7.3	6.8	6.4	6.8	99.6	19	14	12	0	0	0	3	13	0	0	4	2	13	8	9	2	21	34	0	5.0	Oktober
November .	6.5	7.2	5.1	6.3	47.4	20	17	10	3	0	0	1	8	0	0	6	10	19	8	1	0	18	28	0	4.4	November
December .	7.4	7.3	6.9	7.2	107.1	25	19	12	10	0	0	4	17	0	0	12	4	22	7	3	1	22	22	0	4.3	December
Jahr	6.9	6.8	6.5	6.7	934.1	216	170	130	22	3	2	37	152	5	1	40	30	233	143	51	45	269	284	0	4.8	Jahr

Lister.

$\lambda = 6^0\ 34'$ E $= 26^m\ 16^s$ $\varphi = 58^0\ 6'$ N $C_g = 1.15$ mb bei 973 mb

Monat.	Luftdruck. (Normalschwere). Mittel.	Luft-Temperatur. Min.	I	II	III	Mittel.	beobachtetes Max.	Dat.	Min.	Dat.	Absolute Feuchtigkeit. I	II	III	Mittel.	Relat. Feuchtigk. I	II	III	Mittel	Monat.
Januar	1014.6	2.7	4.7	5.3	4.4	4.7	8.0	11	-3.2	27	5.4	5.4	5.3	5.4	82	80	84	83	Januar
Februar . . .	999.4	0.8	2.8	3.6	3.3	3.0	7.5	12	-5.8	20	4.8	4.9	4.9	4.9	83	82	83	83	Februar
März	1012.6	-1.7	0.0	2.4	1.8	1.1	5.8	6	-7.4	10	3.9	4.0	4.0	3.9	78	72	75	76	März
April	08.8	3.0	5.7	8.0	7.1	6.2	14.3	10	-0.3	4	5.1	5.3	5.4	5.2	73	65	71	72	April
Mai	10.1	7.5	10.0	11.7	11.1	10.1	18.5	17	2.0	1	6.8	7.3	7.2	7.0	74	71	73	74	Mai
Juni	12.7	9.3	11.8	13.3	12.5	11.7	19.5	9	5.9	18	8.4	8.9	8.7	8.5	82	78	82	84	Juni
Juli	12.0	13.7	17.5	19.2	18.8	17.3	26.9	25	9.1	1	10.6	11.1	10.6	10.7	71	67	66	69	Juli
August	08.9	13.0	14.8	16.2	15.4	15.0	19.4	23	8.4	22	10.4	10.5	10.2	10.3	84	77	79	81	August
September . .	06.1	9.3	10.9	13.1	12.0	11.6	15.4	16	6.5	13	8.1	8.4	8.4	8.2	84	75	81	81	September
Oktober . . .	07.4	5.3	7.0	9.0	7.9	7.7	13.3	2	-3.8	20	6.3	6.5	6.2	6.2	83	75	77	79	Oktober
November . .	10.9	0.2	2.2	3.7	2.9	2.7	9.2	21	-8.4	28	4.3	4.5	4.4	4.4	79	73	76	77	November
December . .	999.3	-3.3	-0.6	0.4	-0.4	-0.3	6.6	6	-11.8	16	3.9	3.9	3.8	3.9	83	77	79	80	December
Jahr	1008.6	5.0	7.2	8.8	8.1	7.6	26.9		-11.8		6.5	6.7	6.6	6.6	80	74	77	78	Jahr

Gardøl.

$\lambda = 7^0\ 11'$ E $= 28^m\ 44^s$ $\varphi = 58^0\ 30'$ N

Januar		-1.0	1.4	2.5	1.5	1.6	7.8	11	-9.4	27	4.7	4.8	4.7	4.7	91	86	89	89	Januar
Februar . . .		-2.4	0.1	1.5	0.1	0.3	5.4	12	-10.0	8	4.4	4.7	4.4	4.5	88	89	88	88	Februar
März		-6.6	-2.9	1.9	-0.5	-1.2	7.4	19	-14.1	12	3.0	3.9	3.5	3.4	75	71	73	74	März
April		-2.0	2.9	8.0	5.0	3.7	13.4	12	-5.0	4	4.2	4.6	4.7	4.4	72	57	71	71	April
Mai		4.3	8.5	12.7	11.4	9.3	20.6	20	-3.2	4	6.6	6.7	6.7	6.6	79	61	66	76	Mai
Juni		7.7	13.2	18.0	16.1	13.6	27.3	10	2.1	4	7.9	8.8	8.2	8.2	70	58	60	68	Juni
Juli		10.7	16.6	22.6	20.6	17.6	29.5	23	6.9	8	10.3	10.4	10.2	10.2	73	51	57	68	Juli
August		9.7	13.7	17.3	15.1	14.1	21.0	5	6.0	22	9.5	9.7	9.6	9.5	82	67	75	78	August
September . .		5.6	9.0	12.6	9.7	9.6	16.2	16	0.7	29	7.3	7.6	7.6	7.4	85	70	85	83	September
Oktober . . .		0.2	3.8	7.5	5.0	4.8	14.4	2	-10.0	19	5.2	5.4	5.5	5.3	85	70	83	81	Oktober
November . .		-5.0	-1.6	0.9	-0.2	-0.4	9.2	20	-14.5	30	3.7	4.2	4.2	4.0	84	83	86	85	November
December . .		-9.3	-4.7	-3.5	-4.7	-4.5	6.0	6	-19.3	17	2.9	3.1	2.9	3.0	82	81	82	82	December
Jahr		1.1	5.0	8.5	6.6	5.7	29.5		-19.3		5.8	6.2	6.0	5.9	80	70	76	79	Jahr

Tonstad.

$\lambda = 6^0\ 43'$ E $= 26^m\ 52^s$ $\varphi = 58^0\ 40'$ N $C_g = 1.25$ mb bei 1035 mb

Januar	1009.1	-1.6	1.5	3.0	2.0	2.0	9.4	11	-12.0	27	4.6	4.8	4.6	4.7	87	83	84	85	Januar
Februar . . .	994.5	-1.9	1.1	2.8	1.7	1.6	6.4	12	-8.4	20	4.3	4.6	4.5	4.5	85	79	85	84	Februar
März	1007.5	-4.8	-2.3	2.8	0.7	-0.2	8.8	19	-11.8	12	3.2	3.9	3.7	3.5	76	67	71	72	März
April	03.7	-0.1	4.0	8.5	6.6	5.2	13.4	12	-2.6	7	4.4	4.7	4.6	4.5	70	56	62	66	April
Mai	04.9	4.4	9.0	13.1	11.8	9.6	20.2	19	-0.8	1	6.6	6.4	6.5	6.4	77	57	64	74	Mai
Juni	06.6	8.4	13.0	17.9	16.5	13.8	26.5	10	3.0	4	7.9	8.2	8.2	7.9	71	54	59	69	Juni
Juli	06.3	12.3	17.6	23.0	21.1	18.5	28.8	21	8.5	1	10.6	10.3	10.4	10.2	71	50	56	66	Juli
August	03.2	10.2	14.7	17.9	16.1	14.9	22.0	7	5.0	21	9.7	9.6	9.8	9.6	78	64	72	75	August
September . .	00.6	5.9	8.9	13.2	10.7	10.1	17.0	17	2.5	29	7.6	7.8	7.8	7.6	89	69	81	83	September
Oktober . . .	02.1	1.7	4.5	8.4	5.8	5.7	15.2	2	-6.5	20	5.4	5.7	5.6	5.6	84	68	81	80	Oktober
November . .	06.1	-3.3	-1.1	1.9	-0.2	-0.1	10.0	21	-13.6	29	3.6	4.1	3.7	3.8	78	76	74	76	November
December . .	994.5	-7.7	-3.9	-2.5	-4.2	-3.7	6.8	6	-17.2	21	3.1	3.3	3.0	3.1	83	78	80	81	December
Jahr	1003.3	2.0	5.6	9.2	7.4	6.4	28.8		-17.2		5.9	6.1	6.0	6.0	79	67	72	76	Jahr

Bakke.

$\lambda = 6^0\ 39'$ E $= 26^m\ 36^s$ $\varphi = 58^0\ 25'$ N

Januar		0.3	3.0	4.3	3.0	3.2	8.9	11	-6.0	27	4.8	4.9	4.7	4.8	83	77	81	81	Januar
Februar . . .		-1.0	1.7	2.9	2.0	1.9	7.8	12	-7.0	20	4.4	4.6	4.5	4.5	82	79	82	82	Februar
März		-4.5	-1.6	3.4	0.7	0.2	7.6	19	-11.0	15	3.2	4.2	4.1	3.7	73	70	79	75	März
April		-0.1	4.8	9.2	6.7	5.6	15.4	12	-3.0	4	4.6	4.7	4.9	4.6	70	53	66	67	April
Mai		5.0	9.9	13.6	11.6	10.2	20.2	17	-1.8	1	6.5	6.7	7.0	6.6	71	58	69	73	Mai
Juni		7.3	14.0	18.1	15.7	13.7	27.4	10	3.6	4	7.9	7.9	8.8	8.0	67	52	66	72	Juni
Juli		11.1	18.3	22.0	20.0	17.9	30.0	23	5.8	1	10.6	9.8	10.9	10.2	68	51	63	68	Juli
August		9.8	14.8	17.3	15.3	14.5	20.4	5	4.8	31	10.0	9.7	10.3	9.9	81	67	80	80	August
September . .		5.6	9.4	13.3	10.2	10.1	16.4	17	1.0	13	7.5	7.6	7.8	7.5	87	67	84	83	September
Oktober . . .		1.6	4.8	8.6	5.7	5.9	13.4	2	-8.2	15	5.3	5.9	5.6	5.6	81	70	80	78	Oktober
November . .		-2.4	0.2	2.4	0.7	0.8	9.8	21	-9.2	11	4.0	4.4	4.0	4.1	81	79	79	80	November
December . .		-6.4	-2.8	-1.7	-2.4	-2.5	7.4	6	-15.4	20	3.2	3.4	3.3	3.3	78	77	78	78	December
Jahr		2.2	6.4	9.4	7.4	6.8	30.0		-15.4		6.0	6.2	6.3	6.1	77	67	76	76	Jahr

1925.

Lister.

$H = 13$ m, $H_b = 13.1$ m — $h_t = 1.4$ m — $h_r = 1.5$ m

Monat.	Bewölkung. I	II	III	Mittel.	Niederschlag. Summe.	Zahl der Tage mit Niederschlag.	≥0.1 mm.	≥1.0 mm.	Schnee. ≥0.1 mm.	Hagel.	Nebel.	Heiter.	Trübe.	Gewitter.	Sturm.	Vindverteilung. N	NE	E	SE	S	SW	W	NW	C	Windstärke. Mittel.	Monat.
Januar . . .	8.7	8.4	7.4	8.2	102.3	25	18	15	6	5	4	0	17	1	6	1	7	19	3	6	18	28	10	1	5.1	Januar
Februar . .	8.9	8.5	8.3	8.6	126.9	27	24	17	11	2	0	0	20	1	2	2	7	28	8	8	10	14	4	3	5.0	Februar
März	6.4	6.9	6.8	6.7	40.5	22	16	10	12	0	2	3	12	0	0	10	7	18	4	4	3	17	25	5	3.4	März
April	5.9	5.8	5.5	5.7	58.8	15	11	7	2	1	1	6	7	0	0	2	4	21	11	13	12	10	16	1	4.0	April
Mai	7.5	7.0	6.6	7.0	101.6	19	18	12	0	0	1	2	13	1	0	4	4	29	21	6	8	13	7	1	4.2	Mai
Juni	5.9	6.2	6.0	6.0	14.0	14	9	6	0	2	4	3	7	0	0	2	4	3	5	3	8	31	32	2	3.8	Juni
Juli.	6.4	6.1	5.7	6.1	35.0	11	9	5	0	1	3	2	10	4	0	3	3	16	18	10	2	17	22	2	3.4	Juli
August. . .	8.0	7.5	7.5	7.7	202.6	22	21	14	0	0	0	0	12	0	0	2	2	15	6	6	8	22	29	3	4.3	August
September .	7.2	7.0	7.5	7.2	120.0	22	18	17	0	1	0	1	16	4	0	2	8	9	4	6	16	20	24	1	4.2	September
Oktober . .	7.6	7.1	7.0	7.2	107.6	23	18	13	1	0	2	1	12	2	0	10	6	13	8	10	5	13	27	1	4.5	Oktober
November .	6.9	7.6	6.3	6.9	47.1	24	19	9	4	2	1	0	10	1	1	10	25	18	2	0	2	10	19	4	3.7	November
December .	7.7	7.2	6.3	7.1	151.3	26	20	15	13	1	2	2	14	0	1	10	20	26	1	3	1	15	14	3	3.6	December
Jahr	7.3	7.1	6.7	7.0	1107.7	250	201	140	49	15	20	20	150	14	10	58	97	215	91	75	93	210	229	27	4.1	Jahr

Gardøl.

$H =$ ca. 200 m — $h_t = 1.3$ m — $h_r = 1.2$ m

Monat.	Bewölkung. I	II	III	Mittel.	Niederschlag. Summe.	Zahl der Tage mit Niederschlag.	≥0.1 mm.	≥1.0 mm.	Schnee. ≥0.1 mm.	Hagel.	Nebel.	Heiter.	Trübe.	Gewitter.	Sturm.	Vindverteilung. N	NE	E	SE	S	SW	W	NW	C	Windstärke. Mittel.	Monat.
Januar . . .	8.6	8.5	6.5	7.9	198.8	20	18	14	7	1	6	2	20	2	1	1	1	13	4	1	3	22	39	9	2.6	Januar
Februar . .	9.5	8.7	7.8	8.7	265.3	26	24	21	19	3	2	1	22	2	2	4	4	23	9	3	11	6	18	6	3.4	Februar
März	5.7	5.7	6.1	5.8	59.5	16	11	6	7	0	0	7	12	0	0	26	2	29	0	1	3	4	26	2	2.4	März
April	4.8	5.4	4.7	5.0	120.6	12	12	11	6	1	0	9	7	0	0	6	8	27	8	7	7	6	17	4	2.4	April
Mai	6.8	6.7	5.2	6.2	143.8	19	17	14	0	0	0	7	13	0	0	2	4	23	10	31	2	8	13	0	3.1	Mai
Juni	4.5	5.7	5.0	5.1	30.7	16	12	8	0	0	1	6	7	0	0	6	1	22	0	19	0	10	29	3	2.9	Juni
Juli.	4.0	5.8	4.3	4.7	91.2	10	8	7	0	0	0	10	7	3	0	2	1	7	10	30	6	6	20	11	2.2	Juli
August. . .	7.2	7.5	6.1	6.9	102.3	18	15	14	0	0	2	1	13	0	0	0	0	9	8	11	3	5	42	15	3.1	August
September .	6.9	7.2	7.5	7.2	160.8	19	16	12	0	0	7	3	12	0	1	8	1	6	6	10	8	13	26	12	2.5	September
Oktober . .	7.2	6.1	5.5	6.3	216.0	17	13	11	2	0	3	6	14	0	4	22	0	15	4	2	8	7	30	5	3.4	Oktober
November .	5.9	6.1	4.0	5.3	52.8	12	10	8	4	0	3	6	6	0	0	24	2	23	0	0	1	6	23	11	2.5	November
December .	6.8	5.9	6.0	6.2	123.3	17	15	14	13	0	3	6	14	0	0	22	4	16	5	4	0	5	22	15	2.1	December
Jahr	6.5	6.6	5.7	6.3	1565.1	202	171	140	58	5	27	64	147	7	8	123	28	213	64	119	52	98	305	93	2.7	Jahr

Tonstad.

$H = 57$ m, $H_b = 58.9$ m — $h_t = 1.4$ m — $h_r = 1.3$ m

Monat.	Bewölkung. I	II	III	Mittel.	Niederschlag. Summe.	Zahl der Tage mit Niederschlag.	≥0.1 mm.	≥1.0 mm.	Schnee. ≥0.1 mm.	Hagel.	Nebel.	Heiter.	Trübe.	Gewitter.	Sturm.	Vindverteilung. N	NE	E	SE	S	SW	W	NW	C	Windstärke. Mittel.	Monat.
Januar . . .	8.0	7.8	6.5	7.4	287.9	21	20	19	9	3	1	2	17	0	1	13	2	0	0	4	4	18	5	47	1.6	Januar
Februar . .	9.3	8.5	7.7	8.5	303.9	24	21	20	11	5	0	0	20	1	1	12	6	14	3	8	13	3	6	19	2.8	Februar
März	6.5	5.8	5.8	6.0	70.6	22	16	14	12	0	0	5	11	0	0	33	2	0	0	4	0	4	10	40	1.1	März
April	5.0	5.6	5.3	5.3	131.5	14	12	11	4	0	0	8	9	0	0	40	0	0	1	20	0	0	6	23	1.7	April
Mai	6.8	6.6	6.0	6.5	167.3	19	16	15	0	0	1	6	15	0	0	10	5	16	4	15	1	5	3	34	1.7	Mai
Juni	5.2	6.2	5.1	5.5	47.8	10	9	6	0	0	1	8	9	0	0	8	9	3	0	22	4	2	19	23	2.3	Juni
Juli.	4.5	5.6	4.7	4.9	78.3	11	8	8	0	1	0	11	6	0	0	10	1	9	3	25	0	4	3	38	1.4	Juli
August. . .	7.3	7.4	6.9	7.2	97.5	20	14	12	0	0	0	1	13	0	0	6	2	12	2	20	2	7	11	31	1.8	August
September .	7.4	7.2	7.1	7.2	202.7	20	17	15	0	0	1	2	15	0	0	7	0	4	1	17	2	10	12	37	1.3	September
Oktober . .	7.6	7.1	6.1	6.9	192.6	18	18	14	0	0	0	6	18	0	0	24	0	4	2	16	1	7	7	32	1.4	Oktober
November .	6.2	7.0	5.9	6.4	37.1	14	9	6	2	0	2	6	14	0	0	30	0	5	0	1	0	7	9	38	1.0	November
December .	6.9	6.7	5.6	6.4	130.8	19	19	17	15	1	0	6	14	0	0	20	1	5	2	0	1	5	6	53	0.9	December
Jahr	6.7	6.8	6.1	6.5	1748.0	212	179	157	53	10	6	61	161	1	2	213	28	72	18	152	28	72	97	415	1.6	Jahr

Bakke.

$H = 57$ m — $h_t = 2.1$ m — $h_r = 1.0$ m

Monat.	Bewölkung. I	II	III	Mittel.	Niederschlag. Summe.	Zahl der Tage mit Niederschlag.	≥0.1 mm.	≥1.0 mm.	Schnee. ≥0.1 mm.	Hagel.	Nebel.	Heiter.	Trübe.	Gewitter.	Sturm.	Vindverteilung. N	NE	E	SE	S	SW	W	NW	C	Windstärke. Mittel.	Monat.
Januar . . .	8.7	8.7	7.3	8.2	243.6	18	17	15	6	3	3	2	19	1	0	5	3	11	9	6	19	18	22	0	3.7	Januar
Februar . .	9.5	9.3	8.1	9.0	294.8	25	24	20	15	6	2	0	22	1	0	2	9	12	31	4	11	5	10	0	4.1	Februar
März	6.5	6.9	5.4	6.3	72.0	18	14	13	10	1	1	6	12	0	0	15	13	13	19	2	2	13	16	0	3.3	März
April	6.3	6.1	5.8	6.1	172.4	14	13	12	2	4	0	7	14	0	0	4	15	18	17	9	4	5	18	0	4.0	April
Mai	7.6	6.8	6.1	6.8	199.5	19	17	15	0	1	0	5	17	0	0	3	12	10	17	5	10	20	16	0	3.7	Mai
Juni	5.2	6.2	5.7	5.7	32.0	8	8	7	0	1	1	6	12	0	0	4	9	7	5	1	10	28	26	0	4.1	Juni
Juli.	5.3	5.6	4.5	5.1	118.3	8	7	7	0	1	0	7	8	3	0	4	1	9	20	11	3	20	25	0	3.6	Juli
August. . .	8.3	8.3	6.9	7.8	159.1	19	17	16	0	0	2	1	14	0	0	4	7	2	16	4	6	16	38	0	3.7	August
September .	8.0	7.3	7.3	7.5	160.2	19	17	14	0	1	6	2	16	0	0	4	4	12	9	3	17	22	19	0	3.2	September
Oktober . .	7.5	7.0	6.3	6.9	208.2	18	16	14	2	2	7	5	18	1	0	7	16	8	5	7	11	12	27	0	3.9	Oktober
November .	7.4	7.6	6.0	7.0	31.3	10	9	8	4	0	1	3	15	0	0	7	13	16	11	5	9	3	26	0	2.9	November
December .	7.5	7.3	6.4	7.1	184.7	19	19	18	16	1	1	5	17	0	0	2	7	18	16	6	7	15	22	0	2.5	December
Jahr	7.3	7.3	6.3	7.0	1876.1	195	178	159	55	21	24	49	184	6	0	61	109	136	175	63	109	177	265	0	3.6	Jahr

1925.

Eikeland.

$\lambda = 6^0\ 10'$ E $= 24^m\ 40^s$ $\varphi = 58^0\ 40'$ N

Monat.	Luftdruck. Normalschwere. Mittel.	Luft-Temperatur. Min.	I	II	III	Mittel.	beobachtetes Max.	Dat.	Min.	Dat.	Absolute Feuchtigkeit. I	II	III	Mittel.	Relat. Feuchtigk. I	II	III	Mittel.	Monat.
Januar		0.7	2.7	3.4	3.0	2.9	7.2	11	-6.0	28	5.0	5.0	4.7	4.9	87	83	81	84	Januar
Februar		-1.3	1.4	2.5	1.9	1.7	6.6	5	-6.6	20	4.4	4.4	4.6	4.5	86	80	85	84	Februar
März		-2.9	-0.9	1.9	0.2	0.0	5.4	31	-9.0	11	3.5	3.6	3.6	3.5	75	67	73	73	März
April		2.0	4.7	7.3	5.1	5.0	12.4	12	-3.0	4	4.6	4.5	4.3	4.4	70	59	64	67	April
Mai		6.7	10.1	12.5	10.4	10.0	19.4	20	0.6	1	6.3	6.6	6.4	6.3	68	61	69	70	Mai
Juni		8.4	13.5	15.7	13.3	12.7	26.4	10	3.3	18	8.1	8.4	8.1	8.0	71	64	72	74	Juni
Juli		13.2	19.2	21.2	17.8	17.9	28.6	23	8.2	10	10.2	9.4	10.1	9.7	62	52	67	67	Juli
August		11.6	14.0	15.7	13.9	14.0	19.0	7	7.7	31	9.5	9.4	9.4	9.3	80	70	80	80	August
September		7.3	9.4	12.3	9.9	10.0	15.6	12	5.2	4	7.6	7.4	7.2	7.3	88	70	80	82	September
Oktober		3.6	5.6	7.3	6.2	6.1	11.8	6	-3.4	20	5.7	5.8	5.6	5.7	83	75	78	79	Oktober
November		-1.3	0.7	2.3	1.4	1.3	8.4	20	-9.7	29	4.0	4.3	4.1	4.1	77	77	78	77	November
December		-4.6	-1.6	-0.9	-1.6	-1.6	5.2	6	-12.6	20	3.7	3.7	3.5	3.6	84	81	80	82	December
Jahr		3.6	6.6	8.4	6.8	6.7	28.6		-12.6		6.0	6.0	6.0	5.9	78	70	76	77	Jahr

Kvassheim.

$\lambda = 5^0\ 40'$ E $= 22^m\ 40^s$ $\varphi = 58^0\ 33'$ N $C_g = 1.25$ mb bei 1033 mb

Monat.	Luftdruck. Normalschwere. Mittel.	Min.	I	II	III	Mittel.	Max.	Dat.	Min.	Dat.	I	II	III	Mittel.	I	II	III	Mittel.	Monat.
Januar	1014.7	2.7	4.3	5.3	4.4	4.6	8.0	11	-3.8	27	5.5	5.6	5.4	5.5	87	83	85	86	Januar
Februar	999.2	1.0	2.9	4.4	3.5	3.4	8.0	10	-4.4	20	4.7	4.9	4.9	4.8	81	77	82	81	Februar
März	1013.9	-1.3	0.6	2.8	1.3	1.3	6.1	5	-7.8	12	4.2	4.6	4.3	4.3	81	79	83	82	März
April	09.0	2.9	5.9	7.3	6.5	5.9	11.8	7	-1.2	3	5.7	6.1	5.9	5.8	81	80	82	81	April
Mai	10.3	7.5	10.7	11.5	11.0	10.3	17.7	6	1.2	1	7.5	8.2	8.2	7.8	78	82	84	81	Mai
Juni	14.0	8.7	11.5	12.6	11.5	11.1	17.9	9	5.8	17	8.8	9.0	8.7	8.6	88	84	87	89	Juni
Juli	12.9	13.8	17.9	19.1	18.3	17.3	27.4	25	8.1	1	11.9	12.9	12.4	12.2	78	79	80	79	Juli
August	09.6	11.9	14.6	16.1	15.1	14.6	20.5	23	7.3	31	10.6	11.0	10.7	10.6	86	81	84	85	August
September	06.8	8.5	10.9	12.3	11.5	11.1	16.1	17	5.5	28	8.6	8.7	8.8	8.6	89	83	88	88	September
Oktober	08.2	4.8	6.7	8.4	7.0	7.1	12.8	1	-2.6	15	6.5	6.6	6.6	6.6	88	80	88	86	Oktober
November	12.0	1.1	1.9	3.4	2.4	2.5	9.1	20	-6.8	29	4.4	4.8	4.7	4.6	82	80	84	82	November
December	999.9	-2.7	0.0	0.6	-0.1	0.1	6.6	6	-8.8	15	4.0	4.1	4.0	4.0	82	79	82	81	December
Jahr	1009.2	4.9	7.3	8.6	7.7	7.4	27.4		-8.8		6.9	7.2	7.0	7.0	83	81	84	83	Jahr

Obrestad.

$\lambda = 5^0\ 34'$ E $= 22^m\ 16^s$ $\varphi = 58^0\ 39'$ N $C_g = 1.25$ mb bei 1019 mb

Monat.	Luftdruck. Normalschwere. Mittel.	Min.	I	II	III	Mittel.	Max.	Dat.	Min.	Dat.	I	II	III	Mittel.	I	II	III	Mittel.	Monat.
Januar	1011.8	2.3	4.8	5.4	4.3	4.7	8.1	11	-5.0	27	5.5	5.5	5.4	5.5	84	80	85	84	Januar
Februar	996.4	0.8	3.2	4.5	3.6	3.6	8.0	2	-4.9	20	4.9	4.9	4.7	4.8	83	76	78	80	Februar
März	1011.3	-1.5	0.4	2.5	1.4	1.1	5.7	18	-7.3	12	4.1	4.5	4.3	4.2	81	81	83	82	März
April	06.4	2.6	6.0	7.1	6.3	5.8	12.7	7	-1.0	3	5.2	5.5	5.5	5.3	74	72	76	75	April
Mai	07.6	7.1	10.5	11.3	10.6	10.0	18.5	16	0.1	2	7.8	8.6	8.4	8.1	82	86	89	85	Mai
Juni	11.8	8.3	11.1	11.9	11.2	10.6	17.1	24	4.8	18	8.5	8.5	8.4	8.3	86	82	85	87	Juni
Juli	10.4	11.8	17.0	17.8	17.1	16.0	25.0	25	7.4	2	11.2	11.7	11.4	11.2	77	76	78	78	Juli
August	07.1	12.2	14.4	15.7	14.8	14.4	20.1	23	8.0	22	10.4	10.4	10.3	10.2	85	78	82	83	August
September	04.1	8.4	10.6	12.3	11.5	11.0	16.1	17	4.6	28	8.3	8.6	8.7	8.4	87	81	86	86	September
Oktober	05.3	4.4	6.6	8.5	7.4	7.2	12.9	1	-5.1	15	6.5	6.5	6.4	6.5	89	78	83	84	Oktober
November	09.2	-1.1	1.7	3.9	2.5	2.4	9.6	4	-10.8	29	4.3	4.7	4.4	4.5	80	75	77	78	November
December	997.1	-3.4	-0.4	0.4	-0.1	-0.1	6.4	6	-10.9	20	3.9	4.1	3.8	3.9	82	81	78	80	December
Jahr	1006.5	4.3	7.2	8.4	7.6	7.2	23.6		-10.9		6.7	7.0	6.8	6.7	82	79	82	82	Jahr

Skudenes.

$\lambda = 5^0\ 16'$ E $= 21^m\ 4^s$ $\varphi = 59^0\ 9'$ N $C_g = 1.25$ mb bei 972 mb

Monat.	Luftdruck. Normalschwere. Mittel.	Min.	I	II	III	Mittel.	Max.	Dat.	Min.	Dat.	I	II	III	Mittel.	I	II	III	Mittel.	Monat.
Januar	1013.6	3.2	4.8	5.6	4.8	5.0	9.2	5	-3.2	28	5.8	5.9	5.8	5.8	89	85	89	88	Januar
Februar	998.6	2.0	4.0	5.0	4.1	4.2	8.5	14	-1.3	20	5.3	5.5	5.3	5.4	85	83	85	85	Februar
März	1013.6	-0.5	1.3	3.6	2.1	2.0	6.4	25	-5.5	12	4.3	4.4	4.4	4.4	83	72	80	80	März
April	09.0	3.0	5.8	8.3	6.5	6.2	13.4	12	-1.4	3	5.1	5.4	5.3	5.2	73	66	72	72	April
Mai	10.2	6.7	11.0	12.7	10.9	10.4	19.2	18	1.7	1	7.7	7.5	7.9	7.5	78	68	81	82	Mai
Juni	14.3	7.7	12.4	14.2	12.6	11.7	19.8	21	0.3	19	9.6	10.1	9.5	9.5	89	84	88	90	Juni
Juli	13.0	13.8	17.9	19.4	17.7	17.2	24.8	23	7.0	1	11.3	11.5	11.0	11.1	75	69	73	75	Juli
August	09.6	12.9	14.8	16.5	14.7	14.8	20.2	25	10.0	30	10.4	10.5	10.1	10.1	84	75	82	83	August
September	06.5	8.9	11.1	12.8	11.6	11.4	16.5	10	6.3	28	8.2	8.3	8.2	8.1	83	76	80	81	September
Oktober	07.9	5.4	7.0	8.5	7.2	7.4	13.3	1	-0.6	15	6.4	6.5	6.4	6.4	85	78	84	83	Oktober
November	11.8	1.8	3.3	4.7	3.6	3.7	10.3	1	-4.6	29	4.6	4.8	4.7	4.7	78	73	78	77	November
December	999.3	-1.2	0.9	1.5	0.9	1.0	6.2	29	-7.5	15	4.2	4.1	4.2	4.2	79	78	79	79	December
Jahr	1009.0	5.3	7.9	9.4	8.1	7.9	24.8		-7.5		6.9	7.0	6.9	6.9	82	76	81	81	Jahr

1925.

Eikeland.

H = ca. 250 m h_t = 2.2 m h_r = 0.5 m

Monat.	Bewölkung. I	II	III	Mittel.	Niederschlag. Summe.	Zahl der Tage mit Niederschlag.	≥ 0.1 mm.	≥ 1.0 mm.	Schnee. ≥ 0.1 mm.	Hagel.	Nebel.	Heiter.	Trübe.	Gewitter	Sturm.	Windverteilung. N	NE	E	SE	S	SW	W	NW	C	Windstärke. Mittel.	Monat.
Januar . . .	8.3	7.9	8.0	8.1	305.1	20	20	19	9	0	3	2	22	0	0	8	4	6	4	10	5	22	16	18	1.9	Januar
Februar . .	9.2	8.8	8.8	8.9	260.0	27	22	19	15	4	0	0	23	0	2	2	2	25	8	10	8	13	6	10	2.9	Februar
März	6.3	6.9	7.3	6.8	107.1	25	22	17	18	2	1	5	14	0	0	12	6	25	1	3	5	12	9	20	1.5	März
April	5.4	6.4	5.3	5.7	170.1	17	15	11	5	1	0	8	11	0	0	14	2	29	1	12	8	7	6	11	2.5	April
Mai	6.5	6.3	6.3	6.4	171.5	16	14	12	0	0	0	5	14	0	0	7	7	24	8	13	6	15	2	11	2.8	Mai
Juni	5.3	5.3	5.5	5.4	75.6	14	11	8	0	0	0	7	10	0	0	24	16	9	0	1	4	25	2	9	2.3	Juni
Juli	4.6	5.4	5.1	5.0	88.6	14	8	8	0	0	0	9	4	0	0	12	4	16	12	19	1	20	0	9	2.0	Juli
August . . .	8.1	8.2	8.3	8.2	190.3	25	20	14	0	0	0	0	20	0	0	24	0	17	4	17	6	22	1	2	2.5	August
September .	8.4	7.8	8.4	8.2	354.2	24	24	20	0	0	1	1	21	0	0	19	5	12	2	13	5	18	5	11	2.2	September
Oktober . .	7.5	8.2	8.3	8.0	245.8	27	27	16	7	0	2	1	20	0	0	25	10	14	1	15	4	10	7	7	2.2	Oktober
November .	6.4	7.4	6.3	6.7	66.6	19	18	9	6	0	0	4	13	0	1	18	6	26	2	1	1	6	6	24	1.8	November
December .	7.7	7.2	7.4	7.4	171.4	22	21	18	14	1	0	3	20	0	0	8	4	20	6	9	3	8	4	31	1.4	December
Jahr	7.0	7.2	7.1	7.1	2206.3	250	222	171	74	8	7	45	192	0	3	173	66	223	49	123	56	178	64	163	2.2	Jahr

Kvassheim.

H = 7 m, H_b = 9.0 m h_t = 4.3 m h_r = 1.6 m

Monat.	I	II	III	Mittel.	Niederschlag. Summe.	Niederschlag.	≥ 0.1 mm.	≥ 1.0 mm.	Schnee. ≥ 0.1 mm.	Hagel.	Nebel.	Heiter.	Trübe.	Gewitter	Sturm.	N	NE	E	SE	S	SW	W	NW	C	Windstärke. Mittel.	Monat.
Januar . . .	8.1	7.3	7.3	7.6	108.4	15	14	13	5	0	9	1	15	0	3	6	2	7	11	15	25	22	1	4	3.8	Januar
Februar . .	7.6	7.3	7.6	7.5	114.8	19	19	18	6	0	5	0	13	1	3	4	1	9	27	15	14	10	2	2	4.3	Februar
März	6.1	6.0	6.5	6.2	36.3	21	18	14	9	0	4	5	11	0	0	20	11	7	13	7	5	10	12	8	2.5	März
April	4.6	4.8	4.5	4.6	62.4	9	9	5	2	0	3	8	4	1	0	15	1	0	25	18	12	1	15	3	3.3	April
Mai	6.5	5.9	5.7	6.0	126.1	13	13	11	0	0	4	5	10	0	0	10	1	3	21	30	10	3	9	6	4.0	Mai
Juni	5.5	5.2	5.3	5.3	12.7	7	7	6	0	0	5	3	4	0	0	18	1	1	0	10	6	16	36	2	3.0	Juni
Juli	5.2	5.3	4.8	5.1	84.7	8	8	8	0	0	4	5	2	4	0	5	0	4	7	29	11	9	21	7	2.1	Juli
August . . .	7.5	7.2	7.4	7.4	156.1	19	19	19	0	0	3	0	10	0	0	16	0	2	8	16	7	9	32	3	3.4	August
September .	7.2	6.8	7.5	7.2	144.8	21	21	19	0	0	3	1	11	0	0	16	2	2	6	13	21	9	15	6	3.1	September
Oktober . .	7.6	7.2	7.2	7.3	143.6	22	22	20	4	0	10	1	17	0	0	19	10	2	19	12	11	8	9	3	3.4	Oktober
November .	6.2	6.7	6.0	6.3	39.7	12	12	7	3	2	4	3	8	0	0	13	12	17	22	0	6	9	4	7	2.9	November
December .	7.3	6.6	6.5	6.8	111.4	20	18	15	8	0	3	4	12	0	1	11	12	12	22	7	8	10	4	7	3.2	December
Jahr	6.6	6.4	6.4	6.4	1141.0	186	180	155	37	2	57	36	117	6	7	153	53	66	181	172	136	116	160	58	3.2	Jahr

Obrestad.

H = 24 m, H_b = 26.1 m h_t = 2.4 m h_r = 1.7 m

Monat.	I	II	III	Mittel.	Niederschlag. Summe.	Niederschlag.	≥ 0.1 mm.	≥ 1.0 mm.	Schnee. ≥ 0.1 mm.	Hagel.	Nebel.	Heiter.	Trübe.	Gewitter	Sturm.	N	NE	E	SE	S	SW	W	NW	C	Windstärke. Mittel.	Monat.
Januar . . .	8.7	7.8	6.3	7.6	100.6	19	17	12	2	3	2	2	18	0	3	6	2	5	17	14	17	19	6	7	4.2	Januar
Februar . .	8.6	8.3	7.3	8.1	91.2	25	21	18	5	0	0	0	19	0	5	4	5	11	23	17	10	11	2	1	4.6	Februar
März	6.6	7.0	7.1	6.9	31.6	22	17	9	6	1	3	5	15	0	1	22	14	6	10	15	4	7	12	3	3.1	März
April	5.4	5.6	5.5	5.5	58.1	14	12	7	3	4	2	6	7	0	0	21	3	5	23	21	6	2	9	0	4.4	April
Mai	6.9	6.4	6.4	6.6	116.5	14	14	12	0	0	3	2	10	1	0	16	2	7	24	28	4	4	5	3	4.4	Mai
Juni	6.0	6.0	6.4	6.1	20.7	15	10	6	0	1	6	3	4	0	0	47	4	0	0	12	8	8	11	0	3.9	Juni
Juli	5.9	5.3	6.1	5.8	90.9	9	8	7	0	1	2	2	2	3	0	25	2	4	15	26	8	2	10	1	2.8	Juli
August . . .	7.8	7.6	7.5	7.6	162.7	24	20	16	0	0	0	0	13	1	0	29	2	4	11	14	7	8	18	0	4.3	August
September .	7.4	7.2	7.9	7.5	128.6	23	19	19	0	0	0	0	12	2	0	26	6	2	11	16	13	3	13	0	3.9	September
Oktober . .	8.3	7.6	7.8	7.9	132.4	25	22	21	3	3	0	0	18	0	2	24	11	6	23	13	5	3	8	0	4.5	Oktober
November .	6.3	7.1	5.9	6.4	22.0	17	13	6	4	3	0	3	13	0	0	12	16	16	27	0	4	3	12	0	3.6	November
December .	7.5	7.3	6.3	7.0	106.4	25	19	16	5	2	0	2	12	0	1	8	17	12	29	4	8	6	8	1	3.7	December
Jahr	7.1	6.9	6.7	6.9	1061.7	232	192	149	28	18	18	25	143	7	12	240	84	78	213	180	94	76	114	16	4.0	Jahr

Skudenes.

H = 2 m, H_b = 6.8 m h_t = 5.4 m h_r = 2.2 m

Monat.	I	II	III	Mittel.	Niederschlag. Summe.	Niederschlag.	≥ 0.1 mm.	≥ 1.0 mm.	Schnee. ≥ 0.1 mm.	Hagel.	Nebel.	Heiter.	Trübe.	Gewitter	Sturm.	N	NE	E	SE	S	SW	W	NW	C	Windstärke. Mittel.	Monat.
Januar . . .	8.1	7.5	8.0	7.9	99.7	14	14	13	1	2	2	2	18	0	4	0	2	7	14	22	22	13	8	5	4.4	Januar
Februar . .	9.3	8.3	8.1	8.6	102.8	14	14	14	4	0	0	0	20	0	3	4	2	11	25	13	12	10	4	3	4.8	Februar
März	6.4	6.9	6.9	6.7	57.1	18	18	15	12	0	1	3	12	0	0	22	6	6	10	12	2	6	17	12	3.0	März
April	5.4	5.3	4.4	5.0	69.4	11	9	9	2	1	2	10	7	0	0	9	2	9	23	20	5	5	11	6	3.6	April
Mai	5.9	5.7	6.0	5.9	116.8	13	12	12	0	0	1	5	12	0	0	5	3	26	17	15	3	5	12	7	3.3	Mai
Juni	6.2	5.6	5.7	5.8	33.5	10	8	6	0	1	0	5	11	0	1	24	3	3	2	3	5	7	34	9	3.9	Juni
Juli	5.6	5.2	5.7	5.5	98.1	13	9	7	0	0	2	7	8	3	0	4	2	7	9	20	8	9	20	14	2.6	Juli
August . . .	7.9	7.7	8.0	7.9	133.6	22	21	17	0	0	0	0	17	0	0	12	0	8	9	13	6	15	25	5	3.7	August
September .	7.6	7.3	8.0	7.6	165.0	23	22	21	0	0	3	1	14	0	0	10	4	1	11	16	12	8	20	8	3.8	September
Oktober . .	8.0	8.0	7.6	7.9	150.2	24	22	20	4	0	3	1	18	0	0	19	2	8	18	13	4	11	15	3	3.9	Oktober
November .	7.1	6.8	5.5	6.5	57.8	18	18	13	6	3	1	4	12	0	0	12	10	9	24	6	3	10	11	5	3.4	November
December .	7.1	7.1	7.0	7.1	80.2	20	17	16	9	3	1	4	14	0	1	15	9	6	16	9	6	8	5	19	3.1	December
Jahr	7.0	6.8	6.7	6.9	1164.2	200	184	163	38	10	16	42	163	3	9	136	45	101	178	162	88	107	182	96	3.6	Jahr

1925.

Utsire.

$\lambda = 4^0\ 53'$ E $= 19^m\ 32^s$ $\varphi = 59^0\ 18'$ N $C_g = 1.25$ mb bei 965 mb

Monat.	Luftdruck. Normalschwere. Mittel.	Luft-Temperatur. Min.	I	II	III	Mittel.	beobachtetes Max.	Dat.	Min.	Dat.	Absolute Feuchtigkeit. I	II	III	Mittel.	Relat. Feuchtigk. I	II	III	Mittel.	Monat.
Januar	1006.9	3.0	4.9	5.1	4.8	4.8	8.2	7	-1.8	28	5.9	6.0	5.9	5.9	90	90	90	90	Januar
Februar . . .	992.1	1.6	3.6	4.5	3.8	3.8	7.5	14	-1.6	20	5.2	5.6	5.3	5.4	87	87	87	87	Februar
März	1007.4	-0.1	1.5	3.0	2.2	1.9	6.0	5	-3.5	9	4.6	4.8	4.7	4.7	87	83	86	86	März
April	02.8	3.2	5.0	7.1	6.2	5.6	12.6	11	-1.9	4	5.3	5.7	5.5	5.4	80	75	76	78	April
Mai	04.1	7.8	9.7	11.6	10.5	10.0	17.8	18	3.7	4	7.4	8.2	8.1	7.7	84	81	86	86	Mai
Juni	08.6	8.8	10.6	11.9	11.4	10.7	16.8	10	5.2	18	8.5	9.2	8.9	8.7	90	90	89	89	Juni
Juli	07.3	14.1	16.3	18.1	16.4	16.2	26.0	26	8.7	1	11.6	12.2	11.4	11.5	84	79	82	84	Juli
August	03.7	12.9	14.3	15.6	14.2	14.3	19.8	25	10.5	15	10.2	10.3	9.9	9.9	85	78	83	84	August
September . .	00.5	9.6	10.8	12.0	11.1	11.0	15.0	17	7.4	4	8.2	8.5	8.2	8.2	85	83	83	84	September
Oktober . . .	01.7	5.6	7.1	7.9	7.3	7.2	12.7	1	-0.4	14	6.3	6.5	6.3	6.4	84	82	83	83	Oktober
November . .	05.6	2.5	3.9	4.5	4.2	4.1	9.6	1	-3.0	9	4.9	5.0	4.9	4.9	78	78	77	78	November
December . .	993.3	-0.4	1.5	1.9	1.7	1.6	6.8	6	-4.6	15	4.3	4.2	4.5	4.3	81	78	83	81	December
Jahr	1002.8	5.7	7.4	8.6	7.8	7.6	26.0		-4.6		6.9	7.2	7.0	6.9	85	82	84	84	Jahr

Brandesund.

$\lambda = 5^0\ 6'$ E $= 20^m\ 24^s$ $\varphi = 59^0\ 54'$ N $C_g = 1.35$ mb bei 1018 mb

Januar	1012.7	2.7	4.9	5.4	4.8	4.9	8.6	7	-2.0	28	5.6	5.6	5.5	5.6	84	82	84	84	Januar
Februar . . .	998.1	1.7	3.7	5.0	4.3	4.1	8.9	14	-3.1	24	4.6	4.6	4.6	4.6	75	69	73	73	Februar
März	1013.4	-0.2	1.6	3.4	2.5	2.2	6.3	30	-4.3	11	4.4	4.6	4.4	4.5	83	76	77	79	März
April	08.9	3.5	6.1	8.5	6.9	6.5	15.6	11	-1.2	3	5.1	5.4	5.4	5.2	72	65	72	72	April
Mai	10.3	8.1	10.9	13.3	11.3	11.0	21.6	18	2.9	1	7.6	7.8	8.1	7.6	78	68	81	82	Mai
Juni	14.5	9.4	11.6	13.5	11.9	11.5	18.1	21	4.9	18	9.0	9.6	9.1	9.0	89	84	88	90	Juni
Juli	13.0	14.2	16.9	19.2	17.3	17.0	26.3	23	8.4	1	11.9	12.1	11.8	11.7	84	74	81	84	Juli
August	09.6	13.2	15.1	16.6	15.1	15.1	20.5	23	9.8	31	11.3	11.8	11.5	11.3	89	84	90	89	August
September .	06.3	9.5	11.1	12.8	11.6	11.5	16.7	17	7.7	30	9.3	9.9	9.4	9.4	95	91	93	94	September
Oktober . . .	07.8	5.5	7.1	8.3	7.6	7.5	12.7	1	0.0	19	6.7	6.7	6.6	6.7	88	82	84	85	Oktober
November . .	11.8	2.4	3.5	4.3	4.0	3.8	9.8	1	-2.7	29	4.8	5.0	4.9	4.9	80	79	78	79	November
December . .	999.2	-0.8	1.4	1.8	1.5	1.5	7.8	8	-4.9	16	4.2	4.2	4.4	4.3	80	78	83	81	December
Jahr	1008.8	5.8	7.8	9.3	8.2	8.0	26.3		-4.9		7.0	7.3	7.1	7.1	83	78	82	83	Jahr

Slotterøy.

$\lambda = 5^0\ 4'$ E $= 20^m\ 16^s$ $\varphi = 59^0\ 54'$ N

Januar		2.5	4.9	5.0	4.8	4.8	8.8	18	-2.6	29	5.5	5.5	5.5	5.5	82	83	84	83	Januar
Februar . . .		1.4	3.6	4.4	4.2	3.9	7.8	16	-2.8	24	4.7	4.7	4.7	4.7	78	74	74	76	Februar
März		-0.1	1.7	2.7	2.4	2.0	6.0	7	-4.4	11	4.5	4.6	4.5	4.5	85	81	80	82	März
April		3.3	5.8	8.1	6.6	6.2	15.0	11	-1.2	3	5.1	5.4	5.2	5.1	73	67	70	71	April
Mai		8.2	10.5	12.8	10.9	10.7	22.6	18	2.7	2	7.8	8.2	8.1	7.8	82	75	84	85	Mai
Juni		9.2	11.2	12.4	11.2	11.0	16.8	9	5.4	18	8.5	8.8	8.5	8.4	86	83	86	87	Juni
Juli		14.1	16.5	18.0	16.7	16.4	24.6	23	8.5	1	11.6	11.7	11.3	11.3	83	76	80	82	Juli
August		13.2	15.0	16.1	14.6	14.8	19.0	9	10.1	31	11.1	11.3	11.1	11.0	88	83	90	89	August
September . .		9.6	11.2	12.4	11.7	11.5	17.4	17	8.0	28	8.9	9.3	9.2	9.0	90	88	90	90	September
Oktober . . .		5.3	6.9	7.8	7.4	7.2	13.0	1	0.2	19	6.9	7.0	6.9	6.9	92	89	90	91	Oktober
November . .		2.2	3.4	4.1	3.9	3.7	9.5	1	-3.2	30	5.1	5.2	5.4	5.2	85	84	87	86	November
December . .		-0.8	1.3	1.8	1.5	1.4	7.8	8	-5.1	20	4.2	4.4	4.4	4.3	81	82	83	82	December
Jahr		5.7	7.7	8.8	8.0	7.8	24.6		-5.1		7.0	7.2	7.1	7.0	84	80	83	84	Jahr

Svandalsflona.

$\lambda = 6^0\ 59'$ E $= 27^m\ 56^s$ $\varphi = 59^0\ 50'$ N

Januar		-6.5	-3.7	-2.8	-3.8	-3.6	1.4	18	-12.1	20									Januar
Februar		-7.8	-5.5	-4.7	-4.9	-5.2	-0.6	12	-18.4	8									Februar
März		-9.6	-7.2	-4.9	-6.0	-6.5	-0.4	24	-15.2	1									März
April		-4.9	-2.8	0.0	-1.2	-2.1	4.0	10	-9.9	3									April
Mai		0.0	2.6	4.0	3.6	2.5	11.2	20	-8.2	4									Mai
Juni		3.1	7.0	10.0	9.4	7.3	19.6	30	-3.7	17									Juni
Juli		8.6	12.4	15.8	15.0	12.9	23.5	21	3.2	12									Juli
August		5.8	8.3	10.9	9.5	8.7	15.9	6	1.2	31									August
September . .		0.7	3.5	6.0	4.5	4.0	9.4	19	-2.6	23									September
Oktober . . .		-4.0	-1.6	0.4	-1.0	-1.1	6.3	2	-11.7	20									Oktober
November . .		-9.7	-6.6	-5.3	-6.5	-6.4	2.4	20	-21.2	28									November
December . .		-11.3	-7.8	-7.6	-8.5	-8.1	0.0	8	-19.5	16									December
Jahr		-3.0	-0.1	1.8	0.8	0.2	23.5		-21.2										Jahr

1925.

Utsire.

$H = 56\,m$, $H_b = 57.5\,m$ $h_t = 1.9\,m$ $h_r = 1.4\,m$

Monat.	Bewölkung. I	II	III	Mittel.	Niederschlag. Summe.	Zahl der Tage mit Niederschlag.	≥ 0.1 mm.	≥ 1.0 mm.	Schnee. ≥ 0.1 mm.	Hagel.	Nebel.	Heiter.	Trübe.	Gewitter.	Sturm.	Windverteilung. N	NE	E	SE	S	SW	W	NW	C	Windstärke Mittel.	Monat.
Januar . . .	7.5	7.5	7.5	7.5	82.6	20	16	14	4	4	1	2	15	0	1	3	4	2	13	19	22	22	8	0	5.1	Januar
Februar . .	8.1	7.6	7.2	7.6	55.3	22	18	15	5	4	0	0	15	0	2	5	3	17	17	11	14	14	3	0	4.9	Februar
März	6.8	6.1	6.8	6.6	41.9	22	18	13	14	1	0	4	12	0	0	39	3	3	4	14	6	7	16	1	3.2	März
April	5.8	5.4	4.6	5.3	32.0	15	11	8	3	2	0	8	8	0	0	14	0	9	19	23	4	12	9	0	3.4	April
Mai	6.6	5.4	5.5	5.8	88.9	16	14	11	0	0	3	2	7	0	0	10	5	17	15	23	6	8	9	0	3.2	Mai
Juni	6.7	5.9	5.4	6.0	25.3	11	9	7	0	0	4	4	9	0	0	34	0	1	4	8	10	10	23	0	3.5	Juni
Juli	7.1	6.3	5.9	6.4	93.0	11	11	10	0	0	6	4	11	4	0	17	6	7	11	21	9	5	16	1	2.5	Juli
August . . .	8.3	8.0	8.0	8.1	140.7	25	24	18	0	0	1	0	19	1	0	12	2	7	7	16	11	16	22	0	3.8	August
September .	7.4	7.6	8.0	7.7	121.2	25	24	21	0	0	1	0	15	0	0	14	2	4	8	26	7	8	21	0	3.8	September
Oktober . .	8.1	7.8	8.2	8.0	121.6	27	27	23	4	4	2	0	18	0	0	21	4	13	14	12	5	13	11	0	4.1	Oktober
November .	6.7	6.8	6.1	6.5	52.5	20	20	16	6	3	2	3	12	0	0	16	5	12	16	10	9	10	12	0	3.7	November
December .	6.8	7.1	6.8	6.9	90.9	25	24	15	13	1	0	0	10	0	0	19	7	8	16	12	6	16	7	2	4.0	December
Jahr	7.2	6.8	6.7	6.9	945.9	239	216	171	49	19	20	27	151	5	3	204	41	100	144	195	109	141	157	4	3.8	Jahr

Brandesund.

$H = 7\,m$, $H_b = 7.8\,m$ $h_t = 3.9\,m$ $h_r = 1.4\,m$

Monat.	Bewölkung. I	II	III	Mittel.	Niederschlag. Summe.	Zahl der Tage mit Niederschlag.	≥ 0.1 mm.	≥ 1.0 mm.	Schnee. ≥ 0.1 mm.	Hagel.	Nebel.	Heiter.	Trübe.	Gewitter.	Sturm.	Windverteilung. N	NE	E	SE	S	SW	W	NW	C	Windstärke Mittel.	Monat.
Januar . . .	7.9	7.2	7.2	7.4	137.8	21	21	18	3	9	0	1	15	0	1	6	0	6	10	25	15	15	5	11	3.5	Januar
Februar . .	9.3	7.5	7.4	8.1	110.4	20	16	14	11	3	0	0	16	0	1	4	7	10	21	12	10	9	4	7	3.4	Februar
März	7.1	6.5	7.0	6.9	78.5	22	21	19	12	5	0	1	13	0	0	20	15	0	9	18	3	4	11	13	2.8	März
April	5.8	5.3	4.5	5.2	68.9	15	14	12	3	3	0	7	7	0	0	22	0	8	17	19	6	2	3	13	3.2	April
Mai	6.2	6.2	7.3	6.6	98.4	16	14	12	0	0	0	2	9	0	0	23	0	4	19	26	3	2	0	16	2.4	Mai
Juni	6.8	5.4	5.8	6.0	51.4	10	9	6	0	0	1	4	7	0	0	50	0	0	1	15	5	6	10	3	3.4	Juni
Juli	6.3	6.0	6.5	6.3	71.1	12	10	10	0	0	2	2	7	6	0	38	1	0	9	26	4	1	2	12	2.2	Juli
August . . .	8.3	7.3	8.4	8.0	156.6	26	23	20	0	0	0	0	20	2	0	21	0	2	4	27	7	7	17	8	3.2	August
September .	7.7	7.4	8.0	7.7	188.8	23	22	21	0	0	0	1	15	0	0	24	0	0	13	25	3	4	12	9	3.2	September
Oktober . .	8.1	7.8	7.8	7.9	193.1	26	26	25	2	7	0	3	20	0	0	14	10	0	18	16	8	3	15	9	3.1	Oktober
November .	7.2	7.1	7.0	7.1	83.1	21	18	15	7	3	0	2	14	0	0	16	6	4	17	22	2	3	12	8	2.7	November
December .	7.5	7.5	6.6	7.2	120.6	23	22	17	12	3	0	1	12	0	0	12	11	3	18	21	9	2	9	8	3.1	December
Jahr	7.4	6.8	7.0	7.0	1358.7	235	216	189	50	33	3	24	155	8	2	250	50	37	156	252	75	58	100	117	3.0	Jahr

Slotterøy.

$H = 15\,m$ $h_t = 2.0\,m$ $h_r = 1.5\,m$

Monat.	Bewölkung. I	II	III	Mittel.	Niederschlag. Summe.	Zahl der Tage mit Niederschlag.	≥ 0.1 mm.	≥ 1.0 mm.	Schnee. ≥ 0.1 mm.	Hagel.	Nebel.	Heiter.	Trübe.	Gewitter.	Sturm.	Windverteilung. N	NE	E	SE	S	SW	W	NW	C	Windstärke Mittel.	Monat.
Januar . . .	8.3	7.9	8.0	8.1	123.5	22	20	17	1	1	1	1	19	0	5	4	0	6	13	19	22	18	4	7	4.9	Januar
Februar . .	8.4	8.0	8.6	8.3	107.6	17	16	15	4	4	0	0	17	1	3	2	5	19	21	8	13	11	1	4	5.0	Februar
März	7.5	6.5	7.1	7.0	71.7	20	19	17	10	3	0	2	14	0	0	23	10	4	6	19	6	9	13	3	4.2	März
April	5.9	6.2	5.2	5.8	68.1	13	11	9	1	2	1	5	10	0	0	2	1	10	16	14	10	11	16	10	4.0	April
Mai	6.0	6.6	7.4	6.7	91.6	12	12	12	0	0	0	3	11	0	0	7	6	13	12	16	14	10	6	9	3.7	Mai
Juni	6.6	6.7	6.7	6.7	45.9	12	8	6	0	0	1	2	12	0	0	8	2	1	1	6	13	14	38	7	4.2	Juni
Juli	7.4	6.7	7.0	7.0	49.6	12	8	7	0	0	4	2	16	3	0	5	3	8	2	13	13	8	23	18	3.0	Juli
August . . .	8.4	7.1	8.2	7.9	156.9	24	22	19	0	0	0	0	16	1	0	2	1	7	8	12	15	26	16	6	4.0	August
September .	7.8	7.4	8.1	7.8	175.3	22	21	19	0	0	2	1	16	0	0	13	2	5	8	17	11	15	14	5	4.3	September
Oktober . .	8.3	8.2	8.4	8.3	162.3	26	26	25	2	3	0	2	23	0	0	12	8	14	20	7	8	12	8	4	4.3	Oktober
November .	7.3	7.4	7.2	7.3	79.4	20	18	15	9	4	3	2	18	0	0	10	6	10	32	5	5	9	10	3	4.2	November
December .	8.8	7.9	7.5	8.1	104.9	22	19	16	8	2	1	1	19	0	1	8	12	12	29	11	6	8	7	0	4.5	December
Jahr	7.6	7.2	7.4	7.4	1236.8	222	200	177	35	19	13	21	191	5	9	96	56	109	168	147	136	151	156	76	4.2	Jahr

Svandalsflona.

$H = 1081\,m$ $h_t = 1.5\,m$ $h_r = 2.0\,m$

Monat.	Bewölkung. I	II	III	Mittel.	Niederschlag. Summe.	Zahl der Tage mit Niederschlag.	≥ 0.1 mm.	≥ 1.0 mm.	Schnee. ≥ 0.1 mm.	Hagel.	Nebel.	Heiter.	Trübe.	Gewitter.	Sturm.	Windverteilung. N	NE	E	SE	S	SW	W	NW	C	Windstärke Mittel.	Monat.
Januar . . .	7.4	7.2	6.7	7.1	255.7	22	22	20	22	1	0	6	17	0	0	2	1	20	2	0	12	34	8	14	2.4	Januar
Februar . .	9.1	7.6	7.9	8.2	272.5	25	25	19	25	3	0	1	18	1	1	0	2	30	10	0	5	24	6	7	4.0	Februar
März	6.3	6.7	6.6	6.5	60.1	20	18	14	18	0	1	6	15	0	0	2	6	11	12	1	4	17	13	27	1.6	März
April	4.8	5.4	5.4	5.2	46.4	13	12	10	12	0	0	8	11	0	0	2	1	18	22	3	9	6	13	16	2.3	April
Mai	6.5	7.0	7.4	7.0	97.5	18	16	13	6	1	0	3	15	0	0	0	0	7	53	0	6	13	3	11	2.4	Mai
Juni	5.9	5.6	5.7	5.7	92.3	14	13	9	7	0	2	6	12	0	0	4	2	10	4	0	7	18	13	32	1.5	Juni
Juli	4.9	6.8	5.5	5.7	31.7	10	7	7	0	0	0	4	10	2	0	0	0	0	34	3	4	12	10	30	1.5	Juli
August . . .	8.0	8.3	8.2	8.2	107.6	23	19	15	0	0	0	0	18	0	0	4	0	0	26	3	7	19	10	24	2.1	August
September .	7.5	7.6	8.2	7.8	214.3	19	18	14	7	0	0	2	20	0	1	0	1	3	22	2	9	12	15	26	1.9	September
Oktober . .	7.7	8.4	7.9	8.0	130.3	28	25	17	10	0	0	1	20	0	1	12	1	2	26	2	0	14	19	17	2.4	Oktober
November .	6.3	6.3	5.5	6.0	28.2	19	17	8	16	0	0	4	13	0	1	0	1	17	4	0	0	25	14	29	2.1	November
December .	6.4	6.4	6.2	6.3	44.7	20	16	11	16	0	0	7	14	0	2	0	0	13	12	0	0	18	13	37	2.4	December
Jahr	6.7	6.9	6.8	6.8	1381.3	231	208	157	139	5	3	48	183	3	6	26	15	131	227	14	63	212	137	270	2.2	Jahr

Ullensvang.

$\lambda = 6^0\ 40'$ E $= 26^m\ 40^s$ $\varphi = 60^0\ 20'$ N $C_g = 1.35$ mb bei 1017 mb

Monat.	Luftdruck. (Normalschwere). Mittel.	Luft-Temperatur. Min.	I	II	III	Mittel.	beobachtetes Max.	Dat.	Min.	Dat.	Absolute Feuchtigkeit. I	II	III	Mittel.	Relat. Feuchtigk. I	II	III	Mittel.	Monat.
Januar		-0.1	1.6	2.8	2.2	2.1	10.0	14	-8.8	28	4.3	4.5	4.5	4.4	82	77	82	81	Januar
Februar		-0.5	1.3	3.2	1.8	1.9	8.4	14	-6.4	20	3.8	3.8	4.0	3.9	71	64	75	72	Februar
März		-2.4	-0.1	2.4	0.6	0.3	6.5	24	-8.4	10	3.4	3.8	3.7	3.6	72	68	71	71	März
April		2.0	4.1	8.7	6.9	5.7	13.1	10	-1.9	4	4.7	5.3	4.9	4.9	74	62	65	70	April
Mai		7.4	10.0	13.6	12.4	10.8	20.6	17	3.4	4	6.9	7.9	7.7	7.4	75	69	72	75	Mai
Juni		10.3	12.3	17.3	16.3	13.9	24.0	9	6.3	3	7.9	8.9	8.7	8.3	74	61	63	71	Juni
Juli		15.3	17.3	22.1	21.2	18.9	28.4	23	11.0	12	10.3	10.6	11.3	10.5	70	55	62	68	Juli
August		12.7	14.7	17.6	16.1	15.3	21.4	26	8.9	31	9.7	10.2	10.0	9.9	78	69	74	76	August
September		7.8	9.7	12.6	10.7	10.4	16.0	20	5.2	30	7.4	7.9	7.7	7.6	84	73	80	81	September
Oktober		3.3	5.0	7.3	5.8	5.7	14.8	2	-4.7	20	5.1	5.1	5.1	5.1	76	66	73	73	Oktober
November		-1.6	0.0	1.6	0.7	0.6	10.2	20	-7.4	29	3.9	3.7	3.8	3.8	80	74	73	76	November
December		-3.9	-1.4	-1.0	-1.8	-1.5	6.8	8	-9.7	21	3.3	3.3	3.5	3.4	73	70	79	76	December
Jahr		4.2	6.1	9.0	7.7	7.0	28.4		-9.7		5.9	6.2	6.2	6.1	76	67	72	74	Jahr

Eidfjord.

$\lambda = 7^0\ 4'$ E $= 28^m\ 16^s$ $\varphi = 60^0\ 28'$ N $C_g = 1.35$ mb bei 1010 mb

Januar	1012.5	-0.9	1.4	2.3	2.4	1.8	10.4	14	-9.2	27	4.2	4.5	4.3	4.3	80	80	77	79	Januar
Februar	00.1	-0.6	1.4	2.6	2.1	1.8	8.0	14	-6.6	20	3.6	3.7	3.8	3.7	65	65	70	67	Februar
März	13.3	-2.9	-1.0	2.1	0.8	0.2	8.4	19	-10.0	12	2.8	3.4	2.9	3.0	59	58	54	57	März
April	09.8	3.2	5.5	9.0	7.2	6.4	15.2	9	-1.0	3	3.7	4.2	4.4	4.0	53	48	57	55	April
Mai	11.3	8.3	11.2	14.8	13.0	11.8	21.8	18	3.0	2	5.8	6.1	6.1	5.9	59	50	55	59	Mai
Juni	13.1	9.7	11.5	15.4	16.2	13.1	24.0	10	5.6	4	7.5	8.2	7.4	7.6	75	63	55	66	Juni
Juli	12.6	15.2	17.3	20.7	21.0	18.6	28.0	2	11.4	12	10.3	10.3	9.9	10.0	70	57	54	63	Juli
August	08.9	13.3	15.4	17.5	16.4	15.7	22.2	26	9.4	31	9.7	9.7	9.7	9.6	74	66	70	72	August
September	05.9	7.8	10.1	12.5	11.3	10.7	18.6	17	3.6	27	7.6	7.9	7.5	7.6	81	73	75	77	September
Oktober	08.0	3.4	5.5	7.1	6.8	6.1	14.2	2	-5.2	20	4.7	5.0	4.6	4.8	68	65	61	65	Oktober
November	12.5	-1.5	0.1	1.2	0.7	0.5	10.0	21	-9.8	28	3.5	3.9	3.6	3.7	70	72	70	70	November
December	00.4	-4.7	-1.9	-1.0	-2.0	-1.7	7.2	8	-13.8	20	3.1	3.3	3.0	3.1	70	70	68	69	December
Jahr	1009.0	4.2	6.4	8.7	8.0	7.1	28.0		-13.8		5.5	5.8	5.6	5.6	69	64	64	67	Jahr

Granvin.

$\lambda = 6^0\ 49'$ E $= 27^m\ 16^s$ $\varphi = 60^0\ 35'$ N

Januar		-3.4	-1.5	-0.1	-0.9	-1.0	6.7	14	-12.3	28									Januar
Februar		-4.9	-2.2	0.0	-1.7	-1.6	5.2	14	-16.8	20									Februar
März		-8.7	-6.3	0.6	-3.1	-3.7	6.7	25	-20.2	14									März
April		-1.4	1.6	5.9	3.1	2.5	10.2	29	-5.3	4									April
Mai		4.6	8.0	11.6	9.2	8.3	19.7	20	-1.3	1									Mai
Juni		6.8	11.5	16.0	12.7	11.6	25.7	10	1.7	4									Juni
Juli		12.4	17.4	21.9	17.5	17.2	29.2	21	6.7	12									Juli
August		10.1	12.8	15.8	12.8	12.9	19.7	26	3.7	16									August
September		5.4	7.3	11.1	8.2	8.3	14.7	8	1.7	27									September
Oktober		0.1	2.3	5.0	3.2	3.1	10.7	2	-8.2	19									Oktober
November		-5.5	-3.2	-1.6	-2.8	-2.7	5.7	20	-16.3	28									November
December		-9.0	-5.7	-4.7	-5.6	-5.4	4.7	8	-21.8	20									December
Jahr		0.5	3.5	6.8	4.4	4.1	29.2		-21.8										Jahr

Bergen. Pleiestiftelsen Nr. 1.

$\lambda = 5^0\ 21'$ E $= 21^m\ 24^s$ $\varphi = 60^0\ 23'$ N $C_g = 1.35$ mb bei 1011 mb

Januar	1010.0	1.8	3.8	4.7	3.7	4.0	10.0	14	-4.1	27									Januar
Februar	995.9	0.8	2.8	4.8	3.4	3.4	9.4	16	-3.5	20									Februar
März	1011.1	-1.2	0.3	3.7	1.9	1.6	7.6	25	-5.2	12									März
April	06.7	2.8	5.1	9.8	8.1	6.8	16.4	10	-1.9	3									April
Mai	08.1	8.2	11.1	14.8	13.0	11.9	23.8	18	2.6	4									Mai
Juni	12.0	9.6	12.1	16.3	14.8	13.2	25.7	9	5.5	18									Juni
Juli	11.0	14.8	17.2	21.5	19.4	18.3	28.6	23	9.8	12									Juli
August	07.1	12.6	14.1	17.1	15.3	14.9	22.1	26	9.3	31									August
September	03.8	8.5	9.9	12.9	11.2	10.9	16.6	10	5.3	28									September
Oktober	05.4	3.9	5.5	7.9	6.2	6.3	13.2	23	-3.6	19									Oktober
November	09.3	0.7	2.0	4.0	2.6	2.7	10.7	2	-6.3	29									November
December	996.9	-2.4	0.0	0.5	-0.2	0.0	9.6	8	-8.7	15									December
Jahr	1006.4	5.0	7.0	9.8	8.3	7.8	28.6		-8.7										Jahr

Ullensvang.

H = 53 m, H_b = 58.6 m h_t = 5.0 m h_r = 1.0 m

Monat.	Bewölkung. I	II	III	Mittel.	Niederschlag. Summe.	Zahl der Tage mit Niederschlag.	≥ 0.1 mm.	≥ 1.0 mm.	Schnee. ≥ 0.1 mm.	Hagel.	Nebel.	Heiter.	Trübe.	Gewitter.	Sturm.	Windverteilung. N	NE	E	SE	S	SW	W	NW	C	Windstärke. Mittel.	Monat.
Januar . . .	7.1	7.6	7.0	7.2	452.3	20	20	20	8	0	0	4	19	2	0	0	0	0	2	9	24	10	4	44	1.9	Januar
Februar . .	8.7	8.1	8.2	8.3	207.9	14	14	13	9	0	0	0	19	2	2	1	0	13	15	6	17	3	2	27	3.0	Februar
März	6.8	6.6	6.4	6.6	98.2	11	11	11	6	0	0	7	15	0	0	8	0	0	1	8	6	12	7	51	1.2	März
April	5.6	5.7	6.0	5.8	53.0	8	8	8	2	0	0	7	10	0	0	14	0	1	9	12	6	6	5	37	1.7	April
Mai	7.4	7.9	7.7	7.7	61.5	12	12	7	0	0	0	3	19	0	0	10	0	6	17	15	9	6	1	29	2.1	Mai
Juni	6.9	5.8	6.2	6.3	85.3	11	11	9	0	0	0	5	14	0	0	28	2	4	0	2	2	9	4	39	1.5	Juni
Juli	5.6	6.0	6.4	6.0	31.7	8	7	4	0	0	0	5	9	1	0	22	0	3	5	6	0	12	3	42	1.3	Juli
August . . .	8.7	7.7	7.9	8.1	99.9	11	11	11	0	0	0	0	16	0	0	18	1	0	8	11	7	12	10	26	1.7	August
September .	8.8	8.1	8.3	8.4	204.8	18	18	16	0	0	0	0	20	0	0	4	0	0	8	8	8	7	5	50	1.1	September
Oktober . .	7.7	8.5	7.9	8.0	248.3	19	18	17	1	0	0	3	22	0	0	2	0	0	10	9	7	12	14	39	1.7	Oktober
November .	7.3	6.9	6.8	7.0	108.3	11	10	9	4	0	0	5	18	0	0	0	0	6	5	3	2	6	8	60	1.0	November
December .	8.5	7.1	7.1	7.6	129.1	14	14	13	9	0	0	2	17	0	0	6	0	8	5	4	8	5	5	52	1.4	December
Jahr	7.4	7.2	7.2	7.2	1780.3	157	154	138	39	0	0	41	198	5	2	113	3	41	85	93	96	100	68	496	1.6	Jahr

Eidfjord.

H = 5 m, H_b = 4.7 m h_t = 2.1 m h_r = 1.7 m

Januar . . .	6.6	7.2	6.2	6.7	221.2	21	21	18	8	0	0	6	20	0	2	0	0	10	0	0	0	15	17	51	2.1	Januar
Februar . .	7.9	7.9	7.1	7.6	76.4	18	15	12	10	0	0	2	18	0	4	0	4	25	16	0	0	4	14	21	4.0	Februar
März	6.5	6.3	6.4	6.4	31.0	15	11	6	10	0	0	6	14	0	0	1	3	29	7	0	0	9	12	32	2.2	März
April	5.1	5.0	5.1	5.1	17.9	11	8	6	2	0	0	8	9	0	0	1	7	34	8	0	0	3	24	13	3.1	April
Mai	6.5	6.3	7.2	6.7	22.5	14	10	7	0	0	0	5	14	0	0	3	2	42	15	0	0	3	6	22	2.9	Mai
Juni	5.8	5.6	5.6	5.7	52.1	13	9	8	0	0	0	9	10	0	0	1	0	2	3	0	0	12	12	60	1.4	Juni
Juli	5.5	6.0	6.1	5.9	20.0	12	9	3	0	0	0	5	10	0	0	1	0	9	5	1	0	3	17	57	1.0	Juli
August . . .	7.7	7.5	7.8	7.7	72.8	21	18	15	0	0	0	0	17	0	0	0	7	11	0	0	0	7	19	49	2.2	August
September .	7.7	7.7	7.9	7.8	103.0	22	17	15	0	0	0	1	15	0	1	1	5	13	1	0	0	1	13	56	1.8	September
Oktober . .	7.8	8.3	7.1	7.7	102.8	24	21	15	4	0	0	3	20	0	2	0	11	13	4	0	0	20	14	31	3.1	Oktober
November .	6.7	7.1	6.4	6.7	61.0	16	13	11	3	0	0	6	16	0	0	0	6	20	3	0	0	5	13	43	2.4	November
December .	6.7	6.5	4.9	6.0	55.4	14	10	8	8	0	0	4	9	0	1	0	5	35	1	0	0	9	5	38	2.4	December
Jahr	6.7	6.8	6.5	6.7	836.1	201	162	124	45	0	0	55	172	0	10	8	50	243	63	1	0	91	166	473	2.4	Jahr

Granvin.

H = 345 m h_t = 1.5 m h_r = 1.7 m

Januar . . .	7.0	7.3	7.0	7.1	390.6	22	21	20	13	0	0	6	20	0	0	18	1	1	2	4	22	36	8	1	1.3	Januar
Februar . .	7.8	7.7	8.0	7.8	249.9	16	16	16	15	0	0	2	19	0	2	3	0	9	21	9	7	31	4	0	2.5	Februar
März	5.7	5.9	6.2	5.9	95.8	12	12	10	11	0	0	7	13	0	0	24	11	19	8	0	4	15	12	0	1.0	März
April	4.9	5.1	4.8	4.9	65.1	10	10	9	7	0	0	8	10	0	0	8	1	6	24	6	10	17	18	0	0.7	April
Mai	6.0	5.8	6.8	6.2	83.2	13	13	11	0	0	0	7	13	0	0	5	0	2	20	31	13	14	5	3	1.1	Mai
Juni	4.8	4.4	5.2	4.8	136.1	13	10	10	0	0	0	11	10	0	0	3	0	0	4	17	4	22	14	26	1.0	Juni
Juli	4.6	4.4	6.7	5.2	47.8	14	12	9	0	0	0	6	8	0	0	0	0	1	11	36	30	6	9	0	0.4	Juli
August . . .	7.5	7.1	8.5	7.7	134.3	18	18	15	0	0	0	0	12	0	0	7	2	1	17	15	16	25	10	0	0.9	August
September .	7.6	6.8	8.1	7.5	182.8	18	18	17	0	0	0	2	18	0	1	12	2	3	25	2	11	17	18	0	0.8	September
Oktober . .	7.3	7.5	8.0	7.6	185.9	20	17	17	4	0	0	3	19	0	0	29	2	0	7	15	10	17	10	3	1.4	Oktober
November .	5.9	6.5	6.4	6.3	123.6	12	12	11	8	0	0	6	15	0	0	30	1	4	6	6	5	27	11	0	0.9	November
December .	6.5	6.5	6.8	6.6	134.1	12	12	10	11	0	0	7	15	0	0	24	10	5	7	4	10	19	14	0	1.1	December
Jahr	6.3	6.2	6.9	6.5	1829.2	180	171	155	69	0	0	65	172	0	3	163	30	51	152	145	142	246	133	33	1.1	Jahr

Pleiestiftelsen Nr. 1. Bergen.

H = 20 m, H_b = 21.8 m h_t = 4.8 m h_r = 2.0 m

Januar . . .					335.7	23	20	20	5	3																Januar
Februar . .					203.3	19	16	14	10	7																Februar
März					133.3	20	17	17	14	0																März
April					142.2	18	15	15	3	2																April
Mai					89.2	16	14	14	0	0																Mai
Juni					121.9	14	13	12	0	1																Juni
Juli					56.1	15	12	9	0	0																Juli
August . . .					251.6	29	26	22	0	0																August
September .					279.6	24	22	21	0	0																September
Oktober . .					285.3	26	26	26	5	0																Oktober
November .					135.2	20	18	15	6	0																November
December .					206.7	24	21	17	12	0																December
Jahr					2240.1	248	220	202	55	13																Jahr

Bergen. Meteorologisches Observatorium.

$\lambda = 5^0\ 19'$ E $= 21^m\ 16^s$ $\varphi = 60^0\ 24'$ N $C_g = 1.35$ mb bei 1014 mb

Monat.	Luftdruck. (Normalschwere). Mittel.	Luft-Temperatur. Min.	I	II	III	Mittel.	beobachtetes Max.	Dat.	Min.	Dat.	Absolute Feuchtigkeit. I	II	III	Mittel.	Relat. Feuchtigk. I	II	III	Mittel	Monat.
Januar	1007.3	1.9	3.9	4.8	3.8	4.1	10.0	14	-3.9	29	5.4	5.4	5.3	5.4	87	83	85	86	Januar
Februar . . .	993.1	0.9	2.9	4.6	3.5	3.4	10.2	14	-3.3	20	4.1	4.2	4.3	4.2	72	66	72	71	Februar
März	1008.4	-0.9	0.5	3.1	1.8	1.5	8.7	25	-4.7	15	4.0	4.0	4.1	4.0	81	69	75	77	März
April	04.0	3.0	5.4	9.2	7.6	6.6	17.5	12	-2.5	3	4.7	4.7	4.8	4.6	71	58	63	67	April
Mai	05.4	8.0	10.8	13.9	12.4	11.4	23.1	18	2.5	4	6.7	6.7	6.9	6.6	71	60	66	71	Mai
Juni	09.3	9.3	11.9	15.2	13.7	12.5	26.2	9	5.5	18	8.7	9.0	8.5	8.5	84	70	74	82	Juni
Juli	08.4	14.5	16.9	20.5	18.6	17.7	28.5	2	9.9	12	11.0	10.6	10.5	10.5	77	60	67	75	Juli
August	04.5	12.5	14.1	16.5	15.0	14.6	22.3	26	9.0	31	10.2	10.0	10.3	10.0	85	72	81	83	August
September . .	01.2	8.6	10.1	12.6	11.1	10.9	18.2	17	5.8	28	8.1	8.3	8.3	8.1	89	77	85	85	September
Oktober . . .	02.7	3.9	5.5	7.5	6.3	6.2	14.7	24	-2.9	16	6.1	6.2	6.2	6.2	86	79	84	84	Oktober
November . .	06.6	1.1	2.3	4.0	2.8	2.9	10.7	2	-5.3	29	4.6	4.8	4.8	4.7	81	76	81	81	November
December . .	994.3	-1.6	0.4	0.8	0.3	0.4	10.1	8	-7.5	15	3.8	3.9	3.9	3.9	78	78	81	79	December
Jahr	1003.8	5.1	7.1	9.4	8.1	7.7	28.5		-7.5		6.4	6.5	6.5	6.4	80	71	76	78	Jahr

Rundemanden.

$\lambda = 5^0\ 22'$ E $= 21^m\ 28^s$ $\varphi = 60^0\ 24'$ N $C_g = 1.15$ mb bei 937 mb

Januar	944.7	-1.6	0.3	1.0	0.2	0.4	5.0	18	-6.0	28	4.5	4.5	4.3	4.4	93	89	90	92	Januar
Februar . . .	31.4	-3.1	-1.5	-0.1	-0.8	-1.0	5.2	18	-7.6	20	3.6	3.8	3.7	3.7	82	80	81	81	Februar
März	45.4	-5.1	-3.5	-1.2	-2.6	-2.7	3.0	19	-9.4	12	3.3	3.6	3.4	3.4	90	81	84	86	März
April	42.4	-0.2	1.8	4.9	3.3	2.8	12.8	12	-6.9	3	4.0	4.7	4.3	4.2	76	70	73	74	April
Mai	44.8	4.7	7.3	10.0	8.5	7.9	18.4	18	-1.0	4	5.7	6.1	6.1	5.8	73	67	73	73	Mai
Juni	48.9	6.0	9.0	11.6	10.5	9.6	22.0	9	0.6	17	7.2	7.6	7.2	7.1	82	75	77	80	Juni
Juli	49.2	12.0	14.5	16.9	15.2	14.9	23.5	21	6.1	12	9.1	9.5	8.9	9.0	74	67	70	73	Juli
August	44.8	8.7	10.3	11.9	10.8	10.6	16.7	23	5.5	31	8.1	8.5	8.3	8.1	88	83	87	87	August
September . .	41.0	5.1	7.0	8.2	7.1	7.2	12.8	10	2.0	28	6.6	7.0	6.8	6.7	86	85	88	87	September
Oktober . . .	41.4	0.4	2.2	3.4	2.5	2.6	10.1	31	-6.1	15	4.7	5.1	4.9	4.9	85	84	86	85	Oktober
November . .	44.4	-2.5	-1.3	-0.2	-1.0	-0.9	7.4	1	-8.8	28	3.8	4.0	3.9	3.9	86	83	85	85	November
December . .	32.2	-5.0	-3.3	-2.9	-3.2	-3.2	5.2	8	-10.7	15	3.2	3.4	3.2	3.3	86	86	86	86	December
Jahr	942.6	1.6	3.6	5.3	4.2	4.0	23.5		-10.7		5.3	5.6	5.4	5.4	83	79	82	82	Jahr

Søfteland.

$\lambda = 5^0\ 27'$ E $= 21^m\ 48^s$ $\varphi = 60^0\ 14'$ N

Januar . . .		-0.2	2.1	3.5	1.7	2.3	8.7	14	-9.4	28	5.0	5.1	4.8	5.0	91	86	91	90	Januar
Februar . . .		-1.3	1.4	4.0	1.8	2.1	8.9	14	-8.4	20	4.1	4.3	4.2	4.2	79	69	79	77	Februar
März		-3.9	-1.3	2.8	-0.3	-0.1	6.1	30	-11.2	15	3.8	4.0	3.8	3.9	86	68	81	82	März
April		0.3	5.1	9.0	4.9	5.2	16.0	11	-3.5	3	4.9	5.3	4.8	4.9	74	61	72	73	April
Mai		5.6	11.0	14.6	11.1	10.7	22.3	17	-1.1	1	7.0	7.2	6.9	6.8	71	58	69	73	Mai
Juni		7.8	13.0	15.8	13.0	12.3	24.9	9	3.0	4	8.3	8.7	8.2	8.2	75	65	74	78	Juni
Juli		12.1	17.9	21.4	17.6	17.2	27.5	22	7.9	1	11.1	11.3	10.6	10.8	73	60	70	74	Juli
August		11.1	14.2	16.8	13.8	14.1	21.7	26	6.8	31	9.9	10.1	9.6	9.7	83	72	82	82	August
September . .		6.5	9.1	12.5	9.5	9.8	17.1	17	2.3	30	7.1	7.9	7.2	7.3	81	73	81	80	September
Oktober . . .		1.7	4.2	7.2	5.2	5.1	13.1	23	-7.3	19	5.1	5.6	5.3	5.3	81	73	79	79	Oktober
November . .		-2.4	-0.1	2.7	1.0	0.9	9.1	20	-12.8	29	4.0	4.3	4.3	4.2	83	75	82	82	November
December . .		-6.0	-2.5	-1.7	-2.4	-2.3	7.7	8	-16.4	20	3.4	3.5	3.5	3.5	83	83	85	84	December
Jahr		2.6	6.2	9.0	6.4	6.4	27.5		-16.4		6.1	6.4	6.1	6.2	80	70	79	80	Jahr

Slirå.

$\lambda = 7^0\ 23'$ E $= 29^m\ 31^s$ $\varphi = 60^0\ 37'$ N $C_g = 0.95$ mb bei 916 mb

Januar	860.5	-8.0	-5.0	-4.5	-5.5	-5.2	0.4	18	-13.7	20	2.5	2.6	2.4	2.5	73	73	72	72	Januar
Februar . . .	49.0	-11.0	-8.6	-7.5	-8.2	-8.4	-2.8	5	-17.2	8	2.3	2.5	2.5	2.4	84	84	86	85	Februar
März	59.2	-14.0	-11.0	-8.0	-10.5	-10.4	-2.6	26	-22.0	9	2.1	2.4	2.1	2.2	82	80	81	82	März
April	59.5	-8.7	-6.2	-2.4	-4.0	-5.1	2.2	11	-13.5	2	2.6	3.1	2.8	2.7	77	74	76	77	April
Mai	63.6	-2.4	-0.2	1.5	1.2	0.0	7.6	19	-10.2	4	4.0	4.2	4.2	4.0	82	79	80	82	Mai
Juni	66.4	0.7	3.0	6.0	5.0	3.6	14.0	9	-3.8	4	4.7	5.2	5.0	4.9	80	73	75	80	Juni
Juli	68.9	5.9	7.7	11.5	10.6	8.8	18.7	22	0.5	10	6.2	6.9	6.8	6.5	78	69	72	76	Juli
August	63.6	4.0	5.3	8.2	6.6	6.1	13.8	8	0.7	31	5.7	6.3	6.0	5.9	85	77	82	83	August
September . .	58.8	-0.5	0.7	3.3	2.2	1.6	8.2	16	-3.2	29	4.4	4.8	4.6	4.5	88	82	84	86	September
Oktober . . .	57.9	-6.2	-4.4	-3.2	-4.2	-4.2	4.1	1	-14.6	19	3.2	3.4	3.2	3.3	88	87	89	88	Oktober
November . .	59.2	-12.0	-9.4	-7.7	-8.9	-9.0	0.5	21	-22.2	9	2.3	2.5	2.3	2.4	86	85	85	85	November
December . .	48.0	-13.7	-10.3	-10.4	-10.9	-10.6	-0.8	8	-24.0	16	2.1	2.2	2.1	2.1	82	83	83	82	December
Jahr	859.6	-5.5	-3.2	-1.1	-2.2	-2.7	18.7		-24.0		3.5	3.8	3.7	3.6	82	79	80	82	Jahr

Meteorologisches Observatorium. **Bergen.**

H = 43 m, H_b = 44.4 m h_t = 1.7 m h_r = 1.5 m

Monat.	Bewölkung. I	II	III	Mittel.	Niederschlag. Summe.	Zahl der Tage mit Niederschlag.	0.1 mm.	1.0 mm.	Schnee.	0.1 mm.	Hagel.	Nebel.	Heiter.	Trübe.	Gewitter.	Sturm.	Windverteilung. N	NE	E	SE	S	SW	W	NW	C	Windstärke. Mittel.	Monat.
Januar . . .	8.4	7.7	6.8	7.6	283.1	24	22	20	9	11	7	3	19	4	9	4	2	0	20	28	11	16	7	5	3.0	Januar
Februar . .	7.8	7.5	8.1	7.8	177.6	20	17	14	13	11	0	4	20	3	11	4	5	15	20	21	6	8	4	1	3.0	Februar
März	6.5	6.9	7.0	6.8	110.8	23	17	17	14	4	1	2	15	0	3	21	8	1	15	16	3	10	14	5	2.3	März
April	6.0	6.2	5.5	5.9	151.0	18	16	15	7	7	2	5	9	0	1	8	1	1	20	26	8	11	10	5	2.5	April
Mai	6.2	6.9	7.1	6.7	83.4	18	15	13	0	0	1	3	13	0	2	4	4	6	17	22	7	16	12	5	2.4	Mai
Juni	6.4	6.2	5.9	6.2	109.1	16	14	10	0	2	4	6	13	1	0	26	2	3	4	9	6	14	25	1	2.3	Juni
Juli	6.7	6.2	6.5	6.5	43.5	20	14	6	0	0	2	3	10	1	0	8	1	0	10	21	8	23	18	4	1.8	Juli
August . . .	8.5	8.0	7.6	8.0	225.7	28	25	21	0	0	3	0	17	3	1	14	2	2	17	19	8	14	13	4	2.2	August
September .	7.9	7.9	8.3	8.0	246.9	25	23	21	0	2	3	1	17	4	3	14	1	2	15	23	5	8	16	6	2.4	September
Oktober . .	7.8	8.4	7.9	8.0	242.4	26	26	25	6	0	6	3	20	0	1	12	4	2	22	19	4	14	9	7	2.0	Oktober
November .	7.0	7.1	6.6	6.9	131.7	21	18	14	6	2	3	2	15	0	0	10	6	1	22	20	7	9	8	7	1.9	November
December .	6.6	8.1	5.8	6.8	147.1	24	19	16	10	2	0	2	14	0	3	10	7	1	33	21	5	8	4	4	2.4	December
Jahr	7.2	7.3	6.9	7.1	1952.3	263	226	192	65	41	32	34	182	16	34	135	43	34	215	245	78	151	140	54	2.4	Jahr

Rundemanden.

H = 556 m, H_b = 556.7 m h_t = 1.5 m h_r = 1.5 m

Monat.	I	II	III	Mittel.	Niederschlag. Summe.	Niederschlag.	0.1 mm.	1.0 mm.	Schnee.	0.1 mm.	Hagel.	Nebel.	Heiter.	Trübe.	Gewitter.	Sturm.	N	NE	E	SE	S	SW	W	NW	C	Windstärke. Mittel.	Monat.
Januar . . .	8.3	8.0	7.2	7.8	263.6	24	21	20	13	10	12	2	19	3	7	8	4	0	2	20	31	13	6	9	5.2	Januar
Februar . .	8.0	7.8	8.0	7.9	147.8	20	17	14	16	7	8	3	19	2	6	2	4	17	8	20	22	4	2	5	5.2	Februar
März	6.9	7.4	7.2	7.2	104.6	24	19	15	17	7	12	2	17	0	1	18	22	3	1	10	17	8	6	8	4.0	März
April	6.2	6.7	6.0	6.3	100.3	18	16	13	13	6	8	5	12	0	3	13	4	2	6	28	21	6	7	3	4.2	April
Mai	6.2	6.8	7.7	6.9	94.7	19	16	13	1	0	6	3	13	0	3	8	8	9	9	21	24	9	3	2	4.1	Mai
Juni	7.1	6.7	6.2	6.7	159.1	15	15	11	2	1	13	6	16	0	0	26	14	6	1	4	14	12	6	7	3.8	Juni
Juli	6.9	7.2	7.0	7.0	75.4	17	13	10	0	0	9	3	16	1	0	8	3	8	3	18	23	12	7	11	3.1	Juli
August . . .	8.8	9.1	8.5	8.8	298.5	28	25	21	0	0	15	0	23	1	2	14	4	6	2	15	23	14	9	6	3.8	August
September .	8.3	8.7	8.9	8.6	326.9	24	22	19	0	3	17	1	23	2	1	18	4	3	3	20	20	7	7	8	4.5	September
Oktober . .	7.9	8.7	8.0	8.2	336.2	26	26	26	11	1	13	3	20	0	4	16	9	4	12	20	12	10	7	3	4.8	Oktober
November .	7.2	7.4	7.0	7.2	163.1	19	16	14	8	0	8	3	15	0	0	14	6	5	6	21	14	8	7	9	4.2	November
December .	7.0	8.4	6.3	7.2	149.6	24	23	17	20	5	11	1	15	0	3	16	13	7	10	26	10	4	4	3	4.8	December
Jahr	7.4	7.7	7.3	7.5	2219.8	258	229	193	101	40	132	32	208	9	30	161	95	70	63	223	231	107	71	74	4.3	Jahr

Søfteland.

H = 54 m h_t = 2.5 m h_r = 1.0 m

Monat.	I	II	III	Mittel.	Niederschlag. Summe.	Niederschlag.	0.1 mm.	1.0 mm.	Schnee.	0.1 mm.	Hagel.	Nebel.	Heiter.	Trübe.	Gewitter.	Sturm.	N	NE	E	SE	S	SW	W	NW	C	Windstärke. Mittel.	Monat.
Januar . . .	7.9	6.6	6.7	7.1	295.9	21	21	20	9	8	0	5	19	3	0	6	18	0	2	13	30	18	6	0	2.0	Januar
Februar . .	7.1	7.4	7.2	7.2	177.4	18	15	14	9	6	0	4	14	1	0	5	6	22	12	3	13	16	7	0	3.1	Februar
März	5.9	6.6	5.5	6.0	137.2	19	19	16	19	0	0	7	13	0	0	30	20	1	10	8	14	2	8	0	2.3	März
April	4.7	5.4	3.7	4.6	119.6	14	14	13	5	1	0	11	7	0	0	13	4	19	15	13	14	6	6	0	2.9	April
Mai	5.3	6.2	6.3	5.9	75.5	14	13	12	0	0	0	7	12	1	0	4	11	20	20	16	13	8	1	0	3.0	Mai
Juni	6.0	5.2	5.3	5.5	118.0	13	13	10	0	1	1	9	12	1	0	16	15	18	3	9	13	14	2	0	3.2	Juni
Juli	6.5	4.5	5.4	5.5	55.2	14	13	9	0	0	1	5	6	2	0	4	10	19	10	9	11	25	5	0	1.9	Juli
August . . .	9.1	8.3	7.5	8.3	251.7	26	24	21	0	0	0	1	22	1	0	5	10	20	14	16	17	6	5	0	2.2	August
September .	7.6	8.2	7.2	7.7	295.1	21	21	21	0	1	0	2	18	2	0	15	12	3	24	14	9	5	8	0	2.4	September
Oktober . .	7.5	7.9	7.1	7.5	293.9	26	26	23	6	0	0	3	18	0	0	28	3	6	13	7	17	7	12	0	2.0	Oktober
November .	6.2	5.7	7.0	6.3	166.6	19	19	14	7	2	1	5	13	0	0	10	12	26	17	6	8	5	6	0	1.8	November
December .	6.5	6.8	5.5	6.3	180.3	21	20	19	12	0	1	4	14	0	1	2	11	35	12	16	13	2	2	0	1.9	December
Jahr	6.7	6.6	6.2	6.5	2166.4	226	218	192	67	19	4	63	168	11	1	138	132	189	152	130	172	114	68	0	2.4	Jahr

Slirå.

H = 1300 m, H_b = 1300.5 m h_t = 3.0 m h_r = 2.8 m

Monat.	I	II	III	Mittel.	Niederschlag. Summe.	Niederschlag.	0.1 mm.	1.0 mm.	Schnee.	0.1 mm.	Hagel.	Nebel.	Heiter.	Trübe.	Gewitter.	Sturm.	N	NE	E	SE	S	SW	W	NW	C	Windstärke. Mittel.	Monat.
Januar . . .	7.2	7.2	6.7	7.0	270.7	22	21	21	21	0	1	4	19	0	2	5	9	2	0	1	8	50	3	15	4.1	Januar
Februar . .	8.5	8.0	8.1	8.2	236.8	26	24	19	24	0	1	2	20	0	3	2	2	28	9	0	9	27	1	6	4.5	Februar
März	7.1	6.2	6.4	6.6	55.3	25	19	13	19	0	0	5	15	0	0	9	5	8	4	1	3	44	5	14	3.3	März
April	5.8	5.1	4.7	5.2	32.8	17	13	11	13	0	0	8	10	0	0	2	5	27	9	5	5	19	6	12	2.8	April
Mai	7.3	6.8	7.1	7.1	86.9	18	13	13	12	0	3	4	17	0	0	1	1	43	20	1	8	12	4	3	2.9	Mai
Juni	6.7	6.1	5.8	6.2	63.8	16	14	9	10	0	0	6	11	0	0	10	7	10	1	0	2	33	15	12	2.6	Juni
Juli	6.0	6.2	6.5	6.2	51.9	14	12	7	0	0	1	1	9	3	0	0	4	25	10	2	7	27	4	14	2.0	Juli
August . . .	8.3	7.7	8.4	8.1	96.3	26	23	16	2	0	2	0	18	0	0	0	5	18	8	6	3	39	10	4	3.4	August
September .	7.9	7.5	7.5	7.6	144.6	25	20	15	14	2	0	0	15	0	0	4	6	14	10	4	2	40	7	3	3.5	September
Oktober . .	8.6	8.8	8.4	8.6	256.7	30	25	21	24	0	1	0	23	0	1	2	4	26	3	0	0	43	8	7	3.7	Oktober
November .	6.9	7.2	6.7	6.9	98.6	21	20	14	20	0	3	4	14	0	0	4	5	14	2	0	3	37	16	9	3.2	November
December .	7.7	7.2	5.8	6.9	148.6	27	24	18	24	0	0	2	17	0	0	11	6	13	8	0	2	31	14	8	3.3	December
Jahr	7.3	7.0	6.8	7.0	1543.0	267	228	177	183	2	12	36	188	3	6	50	59	228	84	20	52	402	93	107	3.3	Jahr

Stondal.

$\lambda = 7^0\ 21'\ E = 29^m\ 24^s$ $\varphi = 60^0\ 50'\ N$

Monat.	Luftdruck. (Normalschwere). Mittel.	Luft-Temperatur. Min.	I	II	III	Mittel.	beobachtetes Max.	Dat.	Min.	Dat.	Absolute Feuchtigkeit. I	II	III	Mittel.	Relat. Feuchtigk. I	II	III	Mittel.	Monat.
Januar		-4.6	-1.7	-0.6	-1.3	-1.4	6.8	18	-14.6	28									Januar
Februar. . . .		-6.8	-3.7	-2.5	-3.1	-3.4	2.9	2	-14.7	20									Februar
März		-9.1	-5.8	-1.7	-4.7	-4.8	4.6	30	-17.9	10									März
April		-3.4	-0.8	4.2	1.3	0.6	7.4	8	-8.0	5									April
Mai		2.4	5.7	9.2	7.5	6.2	15.1	18	-5.6	4									Mai
Juni.		4.9	8.0	12.4	10.3	8.8	20.4	10	1.8	4									Juni
Juli		9.4	13.6	18.4	15.0	14.0	26.3	21	4.8	9									Juli
August		8.2	10.5	13.6	11.5	11.0	18.1	9	4.8	16									August
September . .		3.4	5.7	9.1	6.9	6.5	13.9	17	-0.1	27									September
Oktober. . . .		-1.8	0.2	2.5	1.2	0.9	9.9	1	-9.9	20									Oktober
November . .		-7.3	-4.9	-3.1	-4.2	-4.3	6.8	20	-16.4	11									November
December . .		-10.8	-6.7	-6.1	-6.2	-6.5	4.1	8	-17.8	20									December
Jahr.		-1.3	1.7	4.6	2.8	2.3	26.3		-17.9										Jahr

Eksingdalen.

$\lambda = 5^0\ 57'\ E = 23^m\ 48^s$ $\varphi = 60^0\ 47'\ N$

Januar		-2.3	1.1	1.0	1.2	0.9	9.0	14	-10.4	29	4.1	4.1	4.0	4.1	79	78	74	77	Januar
Februar . . .		-4.2	-0.5	1.3	0.4	0.0	6.6	14	-11.0	8	3.3	3.7	3.5	3.5	69	69	69	69	Februar
März		-7.3	-4.3	0.4	-2.3	-2.7	5.4	26	-15.2	12	2.8	3.8	3.0	3.2	75	75	69	75	März
April		-1.1	2.4	6.1	3.6	3.0	10.4	10	-7.4	5	3.7	4.0	3.9	3.8	65	56	64	64	April
Mai		4.0	8.3	11.8	9.4	8.5	18.4	20	-0.2	1	5.3	5.3	5.5	5.3	64	51	62	66	Mai
Juni.		6.5	11.1	15.4	13.3	11.5	26.2	10	2.6	18	6.7	7.4	6.8	6.8	68	57	60	66	Juni
Juli		11.3	16.7	20.7	18.1	16.7	27.4	21	5.6	2	10.1	10.3	10.5	10.1	71	57	68	72	Juli
August		10.1	13.1	15.5	14.1	13.3	20.2	23	4.0	16	9.6	9.3	9.7	9.3	87	71	81	84	August
September . .		5.4	8.2	11.2	8.6	8.7	16.8	10	1.6	28	6.9	7.0	6.9	6.8	84	70	84	82	September
Oktober. . . .		0.2	2.7	4.3	3.8	3.2	11.2	23	-8.4	18	4.6	4.9	4.8	4.8	82	77	78	80	Oktober
November . .		-4.1	-1.7	-1.5	-1.3	-1.7	7.6	21	-14.0	28	3.2	3.3	3.2	3.2	73	73	72	73	November
December . .		-7.1	-3.5	-3.4	-4.0	-3.7	5.6	8	-18.4	19	2.6	2.9	2.7	2.7	67	74	71	70	December
Jahr.		1.0	4.5	6.9	5.4	4.8	27.4		-18.4		5.2	5.5	5.4	5.3	74	67	71	73	Jahr

Hellisø.

$\lambda = 4^0\ 43'\ E = 18^m\ 52^s$ $\varphi = 60^0\ 45'\ N$

Januar		3.4	5.1	5.3	4.8	5.0	8.7	7	-1.6	27									Januar
Februar . . .		1.9	3.4	4.5	3.8	3.7	7.1	14	-1.6	20									Februar
März		0.2	1.7	3.1	1.9	2.0	6.4	5	-3.8	9									März
April		3.6	5.5	7.9	6.8	6.1	14.3	11	-2.4	3									April
Mai		8.1	10.2	12.1	10.4	10.3	18.7	18	3.5	2									Mai
Juni.		8.9	11.1	12.1	10.8	10.7	17.3	9	5.5	18									Juni
Juli		13.5	15.7	17.7	16.3	15.9	23.7	2	8.5	1									Juli
August		13.1	14.7	16.0	14.8	14.8	19.7	23	10.5	16									August
September . .		9.4	10.8	12.2	11.3	11.1	14.6	20	7.8	28									September
Oktober . . .		4.8	6.5	7.5	6.7	6.7	12.1	2	-0.7	20									Oktober
November . .		1.8	3.6	4.4	3.9	3.8	9.0	21	-3.0	28									November
December . .		-0.4	1.6	2.0	1.5	1.6	8.2	8	-4.8	22									December
Jahr.		5.7	7.5	8.7	7.9	7.6	23.7		-4.8										Jahr

Vangsnes.

$\lambda = 6^0\ 38'\ E = 26^m\ 32^s$ $\varphi = 61^0\ 10'\ N$ $C_g = 1.35$ mb bei 979 mb

Januar	1005.3	0.1	1.9	2.6	2.3	2.2	8.3	16	-6.0	29	4.4	4.4	4.5	4.4	82	77	80	80	Januar
Februar. . . .	993.2	-1.1	1.0	2.1	1.8	1.4	7.2	14	-5.8	21	3.8	3.8	3.8	3.8	72	70	71	71	Februar
März	1007.0	-1.9	-0.3	2.0	0.5	0.4	6.8	24	-6.8	11	3.4	3.7	3.5	3.5	69	68	67	68	März
April	03.6	2.8	5.6	7.4	6.4	5.8	10.4	30	-2.4	4	4.3	4.6	4.5	4.4	62	59	61	62	April
Mai	05.3	7.5	10.6	12.8	12.3	10.8	19.8	18	2.0	1	6.2	6.4	6.5	6.3	65	58	61	64	Mai
Juni.	07.7	9.4	12.5	15.4	15.0	13.0	23.2	9	5.3	4	8.0	8.5	8.5	8.2	74	65	67	72	Juni
Juli	07.1	15.1	17.5	20.5	19.6	18.1	27.0	21	10.2	9	10.9	11.2	11.0	10.8	73	63	65	70	Juli
August	03.2	12.5	14.7	16.9	15.8	15.0	22.0	9	9.0	16	10.1	10.2	10.0	10.0	82	72	75	79	August
September . .	999.9	8.4	9.8	11.9	10.8	10.4	14.8	18	5.8	14	7.6	8.1	7.8	7.7	84	78	82	82	September
Oktober. . . .	1001.8	3.3	5.1	6.5	5.8	5.5	14.8	24	-2.7	16	5.1	5.2	5.1	5.1	78	71	73	75	Oktober
November . .	06.0	-0.5	1.1	1.6	1.1	1.2	8.8	21	-5.6	28	4.0	3.9	4.1	4.0	76	74	79	77	November
December . .	994.0	-3.1	-1.3	-0.8	-1.1	-1.2	8.0	8	-7.4	15	3.2	3.2	3.1	3.2	69	68	68	68	December
Jahr.	1002.8	4.4	6.5	8.2	7.5	6.9	27.0		-7.4		5.9	6.1	6.0	6.0	74	69	71	72	Jahr

1925.

Stondal.

H = 657 m h_t = 2.0 m h_r = 1.5 m

Monat.	Bewölkung. I	II	III	Mittel.	Niederschlag. Summe.	Zahl der Tage mit Niederschlag.	≥ 0.1 mm.	≥ 1.0 mm.	Schnee. ≥ 0.1 mm.	Hagel.	Nebel.	Heiter.	Trübe.	Gewitter.	Sturm.	Windverteilung. N	NE	E	SE	S	SW	W	NW	C	Windstärke Mittel.	Monat.
Januar . . .	6.9	7.9	6.7	7.2	153.4	19	18	18	13	0	0	4	18	0	0	0	3	0	7	0	40	30	9	4	2.4	Januar
Februar . .	8.2	8.3	8.1	8.2	65.8	19	17	15	17	0	0	2	19	0	0	2	1	6	22	3	24	15	10	1	3.3	Februar
März	7.8	7.3	7.1	7.4	25.0	18	16	5	14	0	0	5	20	0	0	2	27	0	7	0	10	12	33	2	1.9	März
April	6.2	6.2	6.6	6.3	5.7	6	4	3	4	0	0	6	13	0	0	2	0	0	6	1	48	6	23	4	1.8	April
Mai	7.5	7.5	7.5	7.5	35.0	9	9	9	1	0	0	4	15	0	0	1	0	0	29	12	29	8	11	3	2.2	Mai
Juni	6.3	6.0	6.1	6.1	60.8	10	9	8	0	0	0	7	12	0	0	14	5	6	2	2	16	11	29	5	1.8	Juni
Juli	6.8	7.2	6.7	6.9	31.2	7	7	5	0	0	0	2	13	0	0	0	0	4	18	33	18	2	16	2	1.8	Juli
August . . .	8.9	8.7	9.1	8.9	74.6	19	19	17	0	0	0	0	24	0	0	9	0	1	22	6	21	10	22	2	1.7	August
September .	8.7	9.0	8.1	8.6	122.5	18	17	14	0	0	0	0	21	0	0	6	0	0	17	11	18	19	16	3	1.8	September
Oktober . .	7.9	8.7	8.2	8.3	121.1	17	17	14	5	0	0	3	24	0	0	3	3	5	12	6	12	23	26	3	1.9	Oktober
November .	7.5	7.9	7.2	7.5	48.3	11	11	9	7	0	2	4	17	0	0	2	12	0	0	2	16	23	28	7	1.7	November
December .	7.7	8.0	6.5	7.4	34.7	12	10	9	9	0	1	2	18	0	0	6	6	0	15	3	12	20	24	7	1.8	December
Jahr	7.5	7.7	7.3	7.5	778.1	165	154	126	70	0	3	39	214	0	0	47	57	22	157	79	264	179	247	43	2.0	Jahr

Eksingdalen.

H = ca. 300 m h_t = 3.0 m h_r = 1.6 m

Januar . . .	7.7	7.5	7.1	7.4	575.0	21	21	21	10	0	0	5	21	1	1	0	9	31	0	0	5	33	11	4	3.7	Januar
Februar . .	7.9	7.9	7.4	7.7	278.3	17	16	16	14	1	0	4	19	1	3	0	2	41	2	1	3	25	5	5	4.4	Februar
März	6.2	6.8	7.0	6.7	188.7	18	17	16	17	0	1	6	16	0	0	0	1	62	0	0	0	22	2	6	2.6	März
April	5.7	5.8	5.5	5.7	83.3	13	12	12	7	0	1	8	11	0	0	1	10	61	1	0	2	7	7	1	2.7	April
Mai	6.0	7.2	7.4	6.9	62.3	13	12	10	0	0	3	3	14	0	0	0	10	65	1	0	0	13	4	0	3.2	Mai
Juni	6.4	6.0	6.0	6.1	182.3	13	13	13	0	0	4	5	13	0	0	0	9	28	11	0	2	29	10	1	3.2	Juni
Juli	5.5	7.0	7.3	6.6	59.6	11	11	7	0	0	3	3	11	2	0	1	7	28	1	0	0	43	12	1	3.0	Juli
August . . .	9.2	9.0	8.2	8.8	176.0	18	17	16	0	0	7	0	20	0	0	3	8	18	3	1	2	40	13	5	2.9	August
September .	8.5	8.7	8.2	8.5	295.6	17	17	15	0	0	3	0	20	0	0	5	8	22	3	2	0	34	14	2	2.6	September
Oktober . .	8.1	8.4	7.2	7.9	290.8	25	25	24	7	0	3	3	19	0	0	0	5	53	1	0	3	21	7	3	3.0	Oktober
November .	7.9	8.2	7.7	7.9	188.9	16	16	15	8	0	4	3	21	0	0	0	10	46	0	0	2	25	3	4	2.6	November
December .	8.3	8.3	6.7	7.8	211.7	21	19	17	16	0	3	2	18	0	0	1	18	42	0	0	0	28	1	3	2.9	December
Jahr	7.3	7.6	7.1	7.3	2592.5	203	196	182	79	1	32	42	203	4	4	11	97	497	23	4	19	320	89	35	3.1	Jahr

Hellisø.

H = 19 m h_t = 1.7 m h_r = 1.0 m

Januar . . .	8.4	8.1	8.0	8.2	119.3	23	22	19	8	11	7	2	21	1	3	4	2	6	15	17	19	16	12	2	4.8	Januar
Februar . .	7.6	7.6	7.2	7.5	129.6	19	16	16	11	6	0	3	16	2	5	4	8	11	24	9	11	11	5	1	4.4	Februar
März	6.2	6.1	6.3	6.2	78.8	20	18	18	11	4	2	5	12	0	1	18	19	5	7	11	12	2	14	5	3.4	März
April	6.0	5.0	4.6	5.2	63.5	16	14	9	2	2	2	8	8	1	1	12	2	5	14	22	8	2	11	14	2.7	April
Mai	5.6	5.8	6.8	6.1	63.2	15	14	12	0	0	4	5	12	0	0	12	6	11	13	19	12	4	4	12	2.4	Mai
Juni	6.5	5.9	5.7	6.0	49.9	11	11	9	0	0	6	3	13	0	0	38	2	0	2	9	14	4	18	3	4.1	Juni
Juli	6.9	6.1	6.3	6.4	38.7	14	14	10	0	0	7	2	11	0	0	18	2	2	10	15	14	7	7	18	1.6	Juli
August . . .	7.9	7.0	7.8	7.6	135.9	20	19	17	0	0	1	0	16	0	0	15	2	6	8	17	12	12	17	4	3.2	August
September .	8.4	7.6	8.0	8.0	184.4	24	23	21	0	0	1	1	20	1	1	24	3	6	10	16	11	6	13	1	3.8	September
Oktober . .	8.3	8.6	8.1	8.3	144.4	27	26	24	6	2	2	3	22	1	0	16	10	10	20	10	5	10	10	2	3.5	Oktober
November .	6.6	7.2	7.3	7.0	104.7	20	19	14	7	3	3	2	14	0	0	14	8	12	24	12	8	4	6	2	3.6	November
December .	7.5	8.2	6.6	7.4	91.3	23	21	20	13	1	0	1	16	0	0	8	6	15	26	15	5	9	7	2	4.0	December
Jahr	7.2	6.9	6.9	7.0	1203.7	232	217	189	58	29	35	35	181	6	11	183	70	89	173	172	131	87	124	66	3.5	Jahr

Vangsnes.

H = 50 m, H_b = 52.1 m h_t = 1.4 m h_r = 1.4 m

Januar . . .	6.9	6.7	6.9	6.8	206.2	20	19	18	5	0	0	5	20	0	0	5	0	31	0	10	1	22	2	22	2.3	Januar
Februar . .	7.3	7.5	8.1	7.6	127.6	16	16	15	10	0	0	3	17	0	1	1	0	51	2	2	3	10	3	12	3.1	Februar
März	5.4	5.9	6.8	6.0	51.6	14	10	8	6	0	0	7	12	0	0	9	0	41	0	7	2	14	7	13	1.8	März
April	5.0	5.6	5.5	5.4	16.9	11	8	7	3	0	0	8	11	0	0	3	0	31	1	10	1	23	4	17	2.0	April
Mai	6.0	6.6	6.9	6.5	22.4	14	8	6	0	0	0	4	12	0	0	1	0	41	6	7	0	13	0	25	1.9	Mai
Juni	6.3	5.4	5.3	5.7	61.3	10	8	8	0	0	0	8	10	0	0	4	0	9	0	1	0	38	4	34	1.8	Juni
Juli	5.9	6.1	6.4	6.1	31.9	8	7	6	0	0	0	2	6	2	0	3	0	20	0	3	0	37	0	30	1.8	Juli
August . . .	7.7	7.3	7.9	7.6	70.8	18	14	13	0	0	0	0	16	0	0	5	0	21	0	5	0	35	0	27	1.9	August
September .	8.1	7.7	7.9	7.9	127.6	17	16	15	0	0	0	1	16	0	0	5	0	15	5	11	0	22	4	28	1.6	September
Oktober . .	7.3	7.9	7.6	7.6	98.6	19	14	13	0	0	0	3	19	0	0	17	0	22	10	1	4	18	3	18	2.8	Oktober
November .	7.4	7.2	7.2	7.3	47.5	14	9	6	3	0	0	4	16	0	0	4	0	56	0	1	4	15	2	8	2.5	November
December .	7.3	8.2	6.7	7.4	69.5	14	10	9	7	0	0	2	18	0	0	5	0	60	0	7	2	5	6	8	2.6	December
Jahr	6.7	6.8	6.9	6.8	931.9	175	139	124	34	0	0	47	173	2	1	62	0	398	24	65	17	252	35	242	2.2	Jahr

Fjærland.

$\lambda = 6^0\ 46'$ E $= 27^m\ 4^s$ $\varphi = 61^0\ 26'$ N

Monat.	Luftdruck. (Normalschwere.) Mittel.	Luft-Temperatur. Min.	I	II	III	Mittel.	beobachtetes Max.	Dat.	Min.	Dat.	Absolute Feuchtigkeit. I	II	III	Mittel.	Relat. Feuchtigk. I	II	III	Mittel.	Monat.
Januar		-2.2	-0.9	0.5	-0.2	-0.3	8.0	16	-10.7	29	4.1	4.3	4.3	4.2	91	89	89	90	Januar
Februar		-3.5	-1.4	1.2	-0.3	-0.4	7.6	14	-13.8	21	3.7	3.9	3.7	3.8	83	75	78	80	Februar
März		-5.8	-3.9	1.2	-2.2	-2.0	5.6	24	-15.6	14	3.1	3.4	3.2	3.2	85	66	77	78	März
April		-1.3	1.1	7.0	2.8	2.9	11.5	27	-5.8	1	4.3	4.7	4.4	4.4	85	63	75	78	April
Mai		4.9	9.1	13.5	10.0	9.6	21.4	17	0.3	1	6.0	6.4	6.2	6.1	68	56	67	68	Mai
Juni		7.3	12.2	16.7	13.4	12.5	25.2	10	4.2	15	8.1	8.0	7.1	7.6	76	57	62	71	Juni
Juli		11.4	16.5	22.3	17.8	17.3	28.0	22	7.4	1	10.3	10.1	9.3	9.7	74	52	62	68	Juli
August		10.2	13.0	17.3	13.7	13.8	21.8	9	3.9	16	9.3	9.5	9.2	9.2	85	66	79	80	August
September		5.9	7.8	12.6	8.7	9.2	18.4	10	1.4	12	7.3	8.2	7.5	7.6	91	76	90	87	September
Oktober		0.2	2.5	5.6	3.5	3.6	13.8	27	-10.0	19	4.9	5.2	4.9	5.0	87	76	82	83	Oktober
November		-4.6	-2.8	-0.5	-1.9	-1.9	6.8	1	-14.3	10	3.6	4.1	3.7	3.8	91	86	88	89	November
December		-7.6	-4.2	-3.1	-4.7	-4.1	5.8	9	-16.6	20	3.1	3.2	3.0	3.1	86	80	87	85	December
Jahr		1.2	4.1	7.9	5.0	5.0	28.0		-16.6		5.6	5.9	5.5	5.6	84	70	78	80	Jahr

Lærdal.

$\lambda = 7^0\ 29'$ E $= 29^m\ 56^s$ $\varphi = 61^0\ 6'$ N $C_g = 1.35$ mb bei 999 mb

Monat.	Luftdruck. Mittel.	Min.	I	II	III	Mittel.	Max.	Dat.	Min.	Dat.	I	II	III	Mittel.	I	II	III	Mittel.	Monat.
Januar	1011.9	-1.3	0.3	1.4	1.3	0.8	10.6	14	-11.4	28	4.1	4.3	4.1	4.2	87	85	82	85	Januar
Februar	00.0	-1.3	0.7	2.4	2.0	1.4	9.4	14	-8.4	20	3.6	3.7	3.7	3.7	74	69	69	71	Februar
März	13.5	-3.3	-1.6	1.4	0.6	-0.4	8.4	30	-11.2	14	3.0	3.4	3.2	3.2	74	66	66	69	März
April	09.8	2.3	4.9	8.8	6.8	5.9	11.5	25	-0.8	3	4.4	4.6	4.3	4.3	67	54	59	63	April
Mai	11.6	7.5	10.9	13.9	13.4	11.3	21.4	17	3.4	4	6.8	7.0	6.7	6.7	70	59	59	66	Mai
Juni	13.3	9.6	13.1	16.0	16.2	13.6	22.8	10	6.8	21	8.3	8.2	8.3	8.2	74	60	60	70	Juni
Juli	12.6	14.6	17.8	21.4	21.2	18.6	27.2	2	10.0	2	11.3	10.8	11.1	10.9	74	57	60	70	Juli
August	08.8	12.9	15.1	18.0	16.8	15.7	22.8	23	9.0	16	10.0	9.5	9.4	9.5	79	62	66	73	August
September	05.8	7.5	9.5	12.2	10.9	10.3	17.0	18	3.0	27	7.8	7.8	7.5	7.6	88	74	78	82	September
Oktober	08.0	2.4	4.5	6.5	5.5	5.1	15.0	1	-7.2	20	4.8	4.9	4.9	4.9	77	69	73	74	Oktober
November	12.6	-2.6	-1.1	0.4	-0.6	-0.6	9.4	21	-10.0	11	3.4	3.5	3.5	3.5	79	75	79	78	November
December	00.8	-6.7	-3.8	-3.0	-3.9	-3.7	9.3	8	-13.6	21	2.8	2.8	2.7	2.8	80	76	78	78	December
Jahr	1009.1	3.5	5.9	8.3	7.5	6.5	27.2		-13.6		5.9	5.9	5.8	5.8	77	67	69	73	Jahr

Ljøsne.

$\lambda = 7^0\ 37'$ E $= 30^m\ 28^s$ $\varphi = 61^0\ 3'$ N

Monat.	Luftdruck. Mittel.	Min.	I	II	III	Mittel.	Max.	Dat.	Min.	Dat.	I	II	III	Mittel.	I	II	III	Mittel.	Monat.
Januar		-1.6	0.3	1.0	0.4	0.4	11.1	14	-10.9	29									Januar
Februar		-1.4	0.9	2.0	0.0	0.8	8.7	14	-8.5	21									Februar
März		-3.8	-1.7	1.4	-0.4	-0.7	8.7	30	-11.1	14									März
April		2.7	5.7	9.9	6.6	6.4	13.6	8	-1.9	3									April
Mai		7.6	11.1	13.8	12.2	11.2	20.2	18	2.9	4									Mai
Juni		9.4	14.0	18.1	15.7	14.1	26.8	9	5.6	1									Juni
Juli		14.6	19.1	23.8	20.3	19.3	30.5	25	9.3	30									Juli
August		12.2	14.9	17.9	14.9	15.0	23.0	6	8.4	18									August
September		6.8	9.3	13.5	9.7	10.0	18.2	2	-3.0	27									September
Oktober		1.8	4.4	6.9	4.5	4.8	14.5	24	-6.4	19									Oktober
November		-3.1	-1.5	-0.5	-1.5	-1.3	9.9	19	-9.8	11									November
December		-7.0	-3.7	-3.4	-3.9	-3.8	8.3	9	-12.9	15									December
Jahr		3.2	6.1	8.7	6.5	6.4	30.5		-12.9										Jahr

Lyster.

$\lambda = 7^0\ 26'$ E $= 29^m\ 44^s$ $\varphi = 61^0\ 26'$ N

Monat.	Luftdruck. Mittel.	Min.	I	II	III	Mittel.	Max.	Dat.	Min.	Dat.	I	II	III	Mittel.	I	II	III	Mittel.	Monat.
Januar		-2.6	-0.8	0.2	-0.7	-0.5	7.5	14	-8.0	29	3.8	3.9	3.8	3.8	81	78	81	81	Januar
Februar		-4.5	-2.5	-1.3	-1.8	-2.1	4.0	14	-12.0	21	3.3	3.5	3.4	3.4	78	78	77	78	Februar
März		-5.9	-3.8	-2.2	-3.2	-3.5	3.0	19	-12.5	14	2.7	3.1	2.9	2.9	71	72	72	72	März
April		-1.0	2.0	3.6	2.6	1.9	7.0	10	-4.3	2	3.9	4.1	4.1	3.9	71	67	72	72	April
Mai		4.4	7.1	9.0	7.7	7.0	15.5	18	0.0	4	5.4	5.4	5.2	5.2	71	63	66	70	Mai
Juni		7.7	11.0	13.3	11.9	10.9	19.5	10	2.3	18	6.7	6.8	6.1	6.4	69	60	59	66	Juni
Juli		12.6	15.6	18.3	17.1	15.8	24.0	23	7.7	11	9.5	9.4	9.3	9.2	72	61	64	70	Juli
August		9.9	12.0	13.7	12.7	12.1	17.0	8	6.2	31	8.5	8.4	8.1	8.2	83	72	75	79	August
September		5.4	7.5	9.4	8.0	7.7	14.0	17	2.2	27	6.6	6.7	6.2	6.4	86	76	77	81	September
Oktober		-0.1	1.7	3.4	2.3	2.2	12.0	1	-6.7	19	4.1	4.5	4.2	4.3	76	75	75	75	Oktober
November		-4.3	-2.8	-2.0	-2.6	-2.6	5.1	22	-10.9	10	3.1	3.3	3.0	3.1	75	77	71	73	November
December		-7.5	-5.2	-4.5	-5.2	-5.1	4.0	8	-13.0	2	2.5	2.6	2.5	2.5	71	72	71	71	December
Jahr		1.2	3.5	5.1	4.1	3.6	24.0		-13.0		5.0	5.1	4.9	4.9	75	71	72	74	Jahr

1925.

Fjærland.

H = ca. 6 m h_t = 2.6 m h_r = 1.4 m

Monat.	Bewölkung. I	II	III	Mittel.	Niederschlag. Summe.	Zahl der Tage mit Niederschlag.	≥0.1 mm.	≥1.0 mm.	Schnee. ≥0.1 mm.	Hagel.	Nebel.	Heiter.	Trübe.	Gewitter.	Sturm.	Vindverteilung. N	NE	E	SE	S	SW	W	NW	C	Windstärke. Mittel.	Monat.
Januar . . .	7.7	7.5	7.2	7.5	464.1	22	22	20	12	0	4	5	21	4	1	23	10	2	1	9	15	5	5	23	1.0	Januar
Februar . .	8.4	8.1	8.5	8.3	259.9	16	16	16	14	0	2	2	21	1	0	15	11	13	3	5	11	2	7	17	1.3	Februar
März	6.9	6.6	7.5	7.0	128.9	15	15	15	15	0	2	5	20	0	0	28	12	1	0	4	8	6	5	29	0.7	März
April	6.2	6.6	7.0	6.6	29.5	14	12	7	5	0	5	6	15	0	0	21	8	1	0	4	8	10	10	28	0.6	April
Mai	6.7	7.8	8.7	7.7	54.1	14	14	10	0	0	4	1	17	0	0	28	22	6	3	5	2	6	5	16	0.9	Mai
Juni	6.5	6.3	5.5	6.1	108.1	14	13	11	0	0	9	9	14	0	0	26	16	2	1	4	5	4	1	31	0.7	Juni
Juli	7.5	7.5	7.5	7.5	49.5	16	10	9	0	0	2	1	17	3	0	32	17	1	1	7	5	1	1	28	0.7	Juli
August . . .	9.2	8.7	8.6	8.8	111.0	25	18	16	0	0	11	0	23	0	0	15	10	3	0	2	8	3	1	51	0.5	August
September .	9.0	9.0	8.7	8.9	215.5	24	21	17	0	0	13	0	23	0	0	10	5	0	2	3	12	4	2	52	0.5	September
Oktober . .	8.8	8.9	7.6	8.4	202.0	28	25	20	6	0	4	3	24	0	0	16	8	3	2	1	6	9	5	43	0.6	Oktober
November .	7.9	7.9	7.8	7.9	147.4	18	18	15	13	0	6	3	20	0	0	18	5	2	0	1	2	4	2	56	0.4	November
December .	8.7	8.6	7.3	8.2	154.8	24	22	15	20	0	5	1	19	0	0	10	13	4	3	3	6	6	0	48	0.7	December
Jahr	7.8	7.8	7.7	7.7	1924.8	230	206	171	85	0	67	36	234	8	1	242	137	38	16	48	88	60	44	422	0.7	Jahr

Lærdal.

H = 2 m, H_b = 3.0 m h_t = 1.6 m h_r = 1.1 m

Monat.	I	II	III	Mittel.	Niederschlag. Summe.	Niederschlag.	≥0.1 mm.	≥1.0 mm.	Schnee. ≥0.1 mm.	Hagel.	Nebel.	Heiter.	Trübe.	Gewitter.	Sturm.	N	NE	E	SE	S	SW	W	NW	C	Windstärke. Mittel.	Monat.
Januar . . .	6.7	6.8	6.7	6.7	140.4	18	18	17	4	0	0	5	19	1	0	0	0	0	1	8	4	6	4	70	1.1	Januar
Februar . .	7.6	7.8	8.0	7.8	106.7	16	15	13	8	0	0	3	20	0	2	0	0	3	24	3	6	5	0	43	2.2	Februar
März	6.3	6.8	6.9	6.7	16.6	12	10	5	6	0	0	6	16	0	0	1	0	0	5	3	2	2	15	65	0.9	März
April	5.3	5.7	5.4	5.5	5.2	7	6	2	2	0	0	7	9	0	0	2	0	1	8	5	12	4	12	46	1.5	April
Mai	6.1	7.0	7.5	6.9	16.5	10	8	4	0	0	0	4	16	0	0	0	0	0	18	14	6	8	13	34	1.8	Mai
Juni	5.6	6.1	5.3	5.7	32.3	9	9	4	0	0	0	7	9	0	0	4	0	5	0	0	3	6	19	53	1.0	Juni
Juli	5.5	6.5	6.1	6.0	20.8	9	9	5	0	0	0	2	10	2	0	0	0	2	3	3	5	6	6	68	0.5	Juli
August . . .	8.1	8.2	8.1	8.1	53.8	21	16	11	0	0	0	0	19	0	0	3	0	0	9	5	3	5	9	59	1.1	August
September .	8.1	7.4	7.4	7.6	57.1	21	20	10	0	1	0	2	15	0	0	1	0	0	11	1	1	2	3	71	0.7	September
Oktober . .	7.6	8.4	7.8	7.9	69.8	19	16	10	2	0	0	3	22	0	0	0	0	0	13	0	1	5	13	61	1.7	Oktober
November .	6.4	7.3	6.6	6.8	54.9	13	12	9	5	0	0	4	14	0	0	0	6	4	8	0	5	0	3	64	0.8	November
December .	7.2	6.5	5.9	6.5	41.8	16	15	9	12	0	0	4	14	0	0	0	1	5	8	4	0	5	4	66	1.1	December
Jahr	6.7	7.0	6.8	6.8	615.9	171	154	99	39	1	0	47	183	3	2	11	7	20	108	46	48	54	101	700	1.2	Jahr

Ljøsne.

H = 107 m h_t = 1.5 m h_r = 1.5 m

Monat.	I	II	III	Mittel.	Niederschlag. Summe.	Niederschlag.	≥0.1 mm.	≥1.0 mm.	Schnee. ≥0.1 mm.	Hagel.	Nebel.	Heiter.	Trübe.	Gewitter.	Sturm.	N	NE	E	SE	S	SW	W	NW	C	Windstärke. Mittel.	Monat.
Januar . . .	6.5	7.0	6.7	6.7	80.4	16	16	15	5	0	0	6	16	0	0	0	1	4	3	1	5	9	1	69	0.6	Januar
Februar . .	7.2	7.7	7.5	7.5	76.0	12	12	11	4	0	0	4	18	0	0	0	4	27	9	0	0	2	2	40	1.4	Februar
März	6.2	6.3	6.4	6.3	7.9	5	5	3	4	0	0	7	12	0	0	0	5	16	1	0	2	3	0	66	0.6	März
April	4.7	5.1	5.2	5.0	1.8	3	3	0	0	0	0	9	9	0	0	0	1	16	11	0	2	4	2	54	0.8	April
Mai	6.5	7.7	7.9	7.4	8.2	4	4	4	0	0	0	2	19	0	0	0	0	7	13	3	6	8	0	56	0.8	Mai
Juni	6.0	6.0	5.7	5.9	39.9	5	5	4	0	0	0	7	12	0	0	0	0	4	3	0	3	9	6	65	0.4	Juni
Juli	6.0	5.7	6.2	6.0	21.7	6	6	5	0	0	0	6	12	0	0	0	0	2	5	1	7	2	0	76	0.2	Juli
August . . .	8.1	8.6	8.8	8.5	41.3	13	13	9	0	0	0	0	20	0	0	0	0	1	10	6	2	0	0	74	0.4	August
September .	8.6	8.0	7.0	7.9	54.6	9	9	8	0	0	0	1	18	0	0	0	0	3	8	6	0	0	1	72	0.5	September
Oktober . .	8.1	8.3	8.3	8.2	57.3	5	5	4	0	0	0	3	22	0	0	0	0	17	7	0	2	7	4	56	0.9	Oktober
November .	7.2	7.1	7.4	7.2	50.8	6	6	6	2	0	0	4	16	0	0	0	6	8	1	1	2	2	1	69	0.5	November
December .	7.3	6.5	4.8	6.2	30.5	6	6	4	4	0	0	5	11	0	0	0	3	16	3	0	1	3	2	65	0.7	December
Jahr	6.9	7.0	6.8	6.9	470.4	90	90	73	19	0	0	54	185	0	0	0	20	121	74	18	32	49	19	762	0.6	Jahr

Lyster.

H = 502 m h_t = 1.9 m h_r = 1.7 m

Monat.	I	II	III	Mittel.	Niederschlag. Summe.	Niederschlag.	≥0.1 mm.	≥1.0 mm.	Schnee. ≥0.1 mm.	Hagel.	Nebel.	Heiter.	Trübe.	Gewitter.	Sturm.	N	NE	E	SE	S	SW	W	NW	C	Windstärke. Mittel.	Monat.
Januar . . .	6.6	5.5	5.7	5.9	371.0	18	18	18	12	0	0	7	12	0	1	0	0	0	0	0	19	1	12	61	1.1	Januar
Februar . .	6.1	6.0	5.8	6.0	115.3	16	14	14	14	0	0	5	9	0	0	0	4	2	7	1	6	2	16	46	1.3	Februar
März	5.4	5.1	4.4	5.0	66.0	18	14	14	14	0	0	10	9	0	0	0	12	0	3	0	3	0	6	69	0.5	März
April	4.4	4.1	3.6	4.0	14.8	10	8	3	7	0	0	15	8	0	0	0	1	1	8	0	3	0	7	70	0.4	April
Mai	4.7	5.8	5.9	5.5	55.7	16	15	15	0	0	1	9	11	0	0	0	2	0	16	0	11	0	4	60	0.7	Mai
Juni	4.6	3.7	3.8	4.0	41.8	12	11	8	0	0	1	13	6	0	0	0	3	0	24	0	10	2	10	41	1.6	Juni
Juli	5.1	4.6	3.8	4.5	33.3	13	11	7	0	0	1	12	5	1	0	0	0	0	36	0	3	0	1	53	0.8	Juli
August . . .	7.5	7.1	6.8	7.1	95.1	23	21	15	0	0	5	0	9	0	0	0	2	0	21	0	7	0	10	53	0.5	August
September .	7.9	6.9	6.1	7.0	136.6	20	20	18	0	0	0	3	15	0	1	0	4	1	7	2	17	0	12	47	1.3	September
Oktober . .	5.6	6.9	7.2	6.6	101.4	23	19	17	7	0	1	4	12	0	0	0	0	0	4	1	7	12	3	66	0.9	Oktober
November .	5.9	5.8	5.1	5.6	72.4	17	17	16	11	0	0	7	10	0	0	2	3	0	0	0	5	0	2	78	0.3	November
December .	8.0	5.6	5.5	6.4	92.0	16	14	14	14	0	0	2	12	0	0	0	2	0	4	0	6	1	7	73	0.5	December
Jahr	6.0	5.6	5.3	5.6	1195.4	202	182	159	79	0	9	87	118	1	2	2	33	4	130	4	97	18	90	717	0.8	Jahr

Kinn.

$\lambda = 4^0\ 48'$ E $= 19^m\ 12^s$ $\varphi = 61^0\ 33'$ N $C_y = 1.45$ mb bei 978 mb

Monat.	Luftdruck. Normalschwere. Mittel.	Luft-Temperatur. Min.	I	II	III	Mittel.	beobachtetes Max.	Dat.	Min.	Dat.	Absolute Feuchtigkeit. I	II	III	Mittel.	Relat. Feuchtigk. I	II	III	Mittel.	Monat.
Januar	1009.3	2.9	4.9	5.2	4.9	4.9	8.6	11	-1.8	28	5.8	5.7	5.7	5.7	89	84	86	87	Januar
Februar . . .	996.8	1.1	3.1	3.7	3.8	3.3	8.2	14	-1.4	21	4.3	4.5	4.4	4.4	73	73	72	73	Februar
März	1012.3	-0.6	0.9	2.5	1.7	1.5	7.1	5	-5.6	15	4.1	4.3	4.3	4.2	78	75	80	78	März
April	08.1	3.4	5.1	7.8	6.9	6.0	14.4	10	-1.7	3	4.9	5.4	5.1	5.0	74	67	67	70	April
Mai	10.1	8.0	10.1	11.4	10.8	10.2	20.6	18	4.4	1	6.6	7.5	7.1	6.9	72	74	73	72	Mai
Juni	14.1	8.5	10.4	11.3	10.9	10.3	17.6	10	5.2	17	8.5	8.8	8.8	8.5	92	89	91	92	Juni
Juli	12.9	13.3	15.3	16.2	15.9	15.2	23.2	19	7.2	1	11.2	11.9	11.3	11.3	87	87	84	85	Juli
August	08.6	13.0	14.5	15.8	14.8	14.6	21.8	23	9.6	30	10.7	11.2	10.8	10.7	88	84	87	88	August
September . .	05.1	9.4	10.9	12.2	11.4	11.2	15.0	17	6.2	28	8.5	8.9	8.8	8.6	88	85	88	88	September
Oktober . . .	06.7	4.6	6.4	7.0	6.6	6.5	12.6	24	-0.7	14	5.7	5.7	5.8	5.7	78	76	79	78	Oktober
November . .	10.7	1.7	3.2	3.8	3.4	3.4	9.0	19	-3.7	29	4.8	4.9	4.8	4.8	81	80	80	80	November
December . .	998.2	-0.3	1.5	1.6	1.5	1.5	8.3	9	-5.2	15	3.8	3.9	4.0	3.9	72	74	76	74	December
Jahr	1007.7	5.4	7.2	8.2	7.7	7.4	23.2		-5.6		6.6	6.9	6.7	6.6	81	79	80	80	Jahr

Nordfjordeid.

$\lambda = 6^0\ 0'$ E $= 24^m\ 0^s$ $\varphi = 61^0\ 55'$ N

Januar		-0.6	2.2	3.0	2.0	2.3	11.6	18	-12.0	28	4.4	4.6	4.4	4.5	81	79	80	80	Januar
Februar . . .		-1.3	-0.7	2.1	1.6	0.7	8.2	5	-7.6	20	3.3	3.8	3.8	3.6	72	70	71	71	Februar
März		-4.3	-1.8	1.4	-0.6	-0.9	6.0	18	-12.6	14	3.5	3.8	3.8	3.7	84	71	81	80	März
April		1.2	4.7	7.7	5.6	5.3	12.4	10	-5.0	1	4.7	4.9	4.5	4.6	71	61	66	68	April
Mai		6.0	9.9	13.4	11.4	10.5	20.6	17	-0.9	25	6.4	6.5	6.5	6.3	69	56	64	67	Mai
Juni		7.9	12.0	13.8	12.1	11.6	21.8	10	4.2	28	8.0	8.3	7.7	7.8	76	71	73	74	Juni
Juli		12.7	17.9	20.7	17.9	17.5	29.0	19	8.3	9	10.7	11.3	10.8	10.7	71	63	72	72	Juli
August		11.3	15.0	16.6	14.4	14.6	21.8	24	7.9	15	10.0	9.8	9.7	9.6	80	70	80	78	August
September .		6.2	9.9	12.0	9.8	10.1	16.0	15	0.2	28	7.9	8.1	7.7	7.8	86	77	85	84	September
Oktober . . .		0.9	3.5	5.5	3.9	4.1	14.0	23	-11.2	18	5.0	5.4	5.0	5.1	83	79	81	81	Oktober
November . .		-2.1	0.1	1.3	0.6	0.6	10.0	20	-12.0	9	4.0	4.2	4.2	4.1	84	81	84	84	November
December . .		-5.6	-1.7	-1.2	-1.7	-1.6	8.8	9	-17.3	15	3.5	3.6	3.5	3.5	80	79	82	81	December
Jahr		2.7	5.9	8.0	6.4	6.2	29.0		-17.3		6.0	6.2	6.0	5.9	78	71	77	77	Jahr

Opstryn.

$\lambda = 7^0\ 13'$ E $= 28^m\ 52^s$ $\varphi = 61^0\ 56'$ N

Januar		-1.8	0.2	0.9	0.6	0.5	9.7	18	-9.0	28									Januar
Februar . . .		-1.7	0.1	1.1	0.5	0.4	7.9	14	-6.3	20									Februar
März		-4.7	-2.5	0.0	-1.5	-1.7	5.6	18	-11.5	14									März
April		1.9	4.5	7.4	4.6	4.7	12.7	10	-5.3	1									April
Mai		7.1	10.4	12.8	10.9	10.3	21.3	18	2.2	1									Mai
Juni		8.0	11.2	15.9	12.5	11.8	26.7	10	4.0	18									Juni
Juli		13.8	17.7	22.7	18.3	18.1	30.7	21	8.8	12									Juli
August		10.8	13.3	16.9	14.2	13.8	21.2	9	5.5	21									August
September . .		6.6	8.5	11.7	9.1	9.2	16.7	20	4.3	14									September
Oktober . . .		1.4	3.8	5.1	4.0	4.0	13.0	24	-6.6	19									Oktober
November . .		-2.5	-1.0	-0.4	-0.7	-0.8	6.5	19	-8.5	9									November
December . .		-4.9	-2.5	-2.2	-2.1	-2.4	10.3	8	-10.7	1									December
Jahr		2.8	5.3	7.7	5.9	5.7	30.7		-11.5										Jahr

Hellesylt.

$\lambda = 6^0\ 52'$ E $= 27^m\ 28^s$ $\varphi = 62^0\ 5'$ N

Januar		0.0	3.1	3.5	2.8	2.9	14.5	14	-8.5	28	4.1	4.2	4.2	4.2	69	70	72	70	Januar
Februar. . . .		-3.2	0.2	2.1	1.0	0.8	6.7	14	-10.5	21	3.2	3.8	3.5	3.5	62	70	66	65	Februar
März		-5.1	-1.5	2.0	0.1	-0.4	9.2	24	-13.6	14	3.0	3.8	3.3	3.4	67	69	69	68	März
April		0.6	4.8	8.2	6.2	5.2	12.5	7	-6.4	1	4.3	4.7	4.4	4.4	65	57	60	63	April
Mai		5.6	10.2	13.5	11.8	10.3	23.5	17	-0.3	1	6.2	6.1	5.9	6.0	67	53	58	65	Mai
Juni		8.4	11.9	14.2	13.4	12.0	21.8	6	4.1	19	7.4	7.5	7.8	7.4	72	62	68	73	Juni
Juli		13.5	17.9	20.4	19.9	17.9	29.4	22	10.6	12	10.0	10.0	10.4	9.9	66	56	60	65	Juli
August		11.2	14.7	16.9	15.8	14.7	21.7	24	5.2	19	9.3	9.6	9.7	9.3	75	67	73	74	August
September . .		7.2	9.7	12.2	11.0	10.4	17.8	15	4.0	11	7.2	7.6	7.5	7.3	80	72	76	77	September
Oktober . . .		0.9	3.9	5.7	3.9	4.1	13.7	24	-8.7	19	4.7	5.2	4.5	4.8	75	74	72	74	Oktober
November . .		-3.1	-0.5	0.9	0.3	0.0	8.5	18	-13.2	11	3.5	3.7	3.5	3.6	73	70	69	71	November
December . .		-6.5	-1.9	-1.2	-1.5	-1.7	11.8	8	-13.9	15	3.2	3.2	3.2	3.2	75	70	71	73	December
Jahr		2.5	6.0	8.2	7.1	6.4	29.4		-13.9		5.5	5.8	5.7	5.6	70	66	68	70	Jahr

Kinn.

H = 9 m, H_b = 8.0 m h_t = 1.5 m h_r = 1.4 m

Monat.	Bewölkung. I	II	III	Mittel.	Niederschlag. Summe.	Zahl der Tage mit Niederschlag.	≧0.1 mm.	≧1.0 mm.	Schnee. ≧0.1 mm.	Hagel.	Nebel.	Heiter.	Trübe.	Gewitter.	Sturm.	Windverteilung. N	NE	E	SE	S	SW	W	NW	C	Windstärke. Mittel.	Monat.
Januar . . .	8.0	7.9	8.1	8.0	203.5	24	24	24	4	9	0	3	20	0	7	4	1	5	17	14	18	14	16	4	6.4	Januar
Februar . .	7.7	7.8	7.9	7.8	162.4	18	17	16	10	6	0	3	19	0	6	2	9	25	11	13	8	8	8	0	5.8	Februar
März	6.4	6.6	7.2	6.7	163.9	24	22	22	17	7	0	1	15	0	3	16	21	10	9	15	5	5	8	4	4.9	März
April	5.9	4.9	5.7	5.5	89.2	18	15	14	5	2	0	7	11	0	2	10	5	20	13	16	13	6	6	1	5.1	April
Mai	5.6	5.7	7.3	6.2	46.7	14	11	11	0	0	0	3	12	0	0	14	19	14	10	8	18	2	5	3	4.5	Mai
Juni	6.7	6.3	6.3	6.4	93.5	16	13	11	0	0	0	3	13	0	0	30	10	1	4	5	19	6	14	1	5.1	Juni
Juli	7.1	6.4	7.0	6.8	49.9	15	11	9	0	0	0	1	12	0	0	18	1	5	7	11	22	10	13	6	3.3	Juli
August . . .	8.8	7.4	8.0	8.1	167.1	26	19	16	0	0	0	0	21	0	0	13	8	8	9	6	23	11	14	1	4.8	August
September .	8.8	7.8	7.8	8.1	180.6	22	21	19	0	0	0	0	20	0	1	22	7	10	13	10	9	7	10	2	5.3	September
Oktober . .	8.7	8.7	8.2	8.5	207.1	29	29	28	8	5	0	1	24	0	1	16	7	27	12	6	6	9	7	3	5.4	Oktober
November .	8.0	8.1	7.6	7.9	140.9	23	23	20	8	4	0	2	20	0	1	14	8	27	16	12	3	4	4	2	5.1	November
December .	8.0	8.4	7.8	8.1	130.5	28	27	25	16	2	0	1	18	0	3	8	9	34	20	7	4	4	4	3	5.3	December
Jahr	7.5	7.2	7.4	7.3	1635.3	257	232	215	68	35	0	25	205	0	24	167	105	186	141	123	148	86	109	30	5.1	Jahr

Nordfjordeid.

H = 5 m h_t = 1.6 m h_r = 1.4 m

Monat.	Bewölkung. I	II	III	Mittel.	Niederschlag. Summe.	Zahl der Tage mit Niederschlag.	≧0.1 mm.	≧1.0 mm.	Schnee. ≧0.1 mm.	Hagel.	Nebel.	Heiter.	Trübe.	Gewitter.	Sturm.	Windverteilung. N	NE	E	SE	S	SW	W	NW	C	Windstärke. Mittel.	Monat.
Januar . . .	8.1	7.4	7.1	7.5	413.7	19	19	19	5	0	0	4	20	0	0	0	0	1	6	16	11	14	2	43	1.3	Januar
Februar . .	6.9	7.2	6.2	6.8	259.1	17	16	16	11	4	0	4	15	0	2	0	0	0	16	12	7	9	0	40	1.2	Februar
März	5.5	6.6	6.7	6.3	184.5	18	15	15	10	1	0	7	14	0	0	0	0	0	7	10	5	10	2	59	0.7	März
April	5.6	5.1	6.6	5.8	81.0	12	11	11	3	0	0	7	13	0	0	1	0	4	17	9	2	10	0	47	0.8	April
Mai	4.4	4.6	7.2	5.4	44.3	8	7	6	0	0	0	5	8	0	0	3	0	28	2	4	2	8	0	46	0.6	Mai
Juni	6.3	5.6	6.2	6.0	119.5	11	11	11	0	0	0	5	12	0	0	4	0	6	4	8	9	23	2	34	0.9	Juni
Juli	5.7	5.5	7.1	6.1	70.1	9	8	7	0	0	2	6	12	3	0	0	0	1	8	4	2	26	2	50	0.7	Juli
August . . .	8.7	8.2	8.6	8.5	116.3	18	15	15	0	0	1	0	19	0	0	0	0	2	7	8	5	20	5	46	0.9	August
September .	8.2	7.9	8.3	8.1	247.6	18	14	14	0	0	1	1	20	0	0	0	0	0	6	13	3	13	2	53	0.8	September
Oktober . .	8.3	8.3	7.5	8.0	262.2	20	19	19	6	0	0	2	22	0	0	0	0	1	15	3	2	16	6	50	0.8	Oktober
November .	7.1	7.4	7.1	7.2	204.4	16	14	13	5	0	0	5	18	0	0	0	0	1	14	12	2	10	3	48	0.9	November
December .	7.1	7.1	6.2	6.8	136.6	15	13	13	8	0	0	4	16	0	0	1	0	1	13	10	1	5	4	58	0.7	December
Jahr	6.8	6.7	7.1	6.9	2139.3	181	162	159	48	5	4	50	189	3	2	9	0	45	115	109	51	164	28	574	0.9	Jahr

Opstryn.

H = 205 m h_t = 1.6 m h_r = 1.0 m

Monat.	Bewölkung. I	II	III	Mittel.	Niederschlag. Summe.	Zahl der Tage mit Niederschlag.	≧0.1 mm.	≧1.0 mm.	Schnee. ≧0.1 mm.	Hagel.	Nebel.	Heiter.	Trübe.	Gewitter.	Sturm.	Windverteilung. N	NE	E	SE	S	SW	W	NW	C	Windstärke. Mittel.	Monat.
Januar . . .	7.4	7.1	6.3	6.9	278.4	18	18	17	13	0	0	7	18	0	0	0	0	6	2	6	7	6	5	61	0.6	Januar
Februar . .	7.5	6.9	6.3	6.9	98.2	17	17	16	15	0	0	3	16	0	0	0	3	13	12	12	5	4	6	29	1.5	Februar
März	5.3	6.8	6.6	6.2	85.7	16	15	14	15	0	0	7	14	0	0	0	0	26	5	6	3	1	5	47	0.9	März
April	4.8	6.1	5.4	5.4	25.1	7	7	6	3	0	0	6	8	0	0	0	0	11	20	16	9	1	6	27	1.2	April
Mai	5.4	6.1	7.2	6.2	10.2	6	6	4	0	0	0	3	11	0	0	2	1	2	10	25	21	3	9	20	1.6	Mai
Juni	7.3	6.5	7.1	7.0	73.6	13	12	9	0	0	0	4	15	0	0	0	0	0	6	13	8	3	10	50	0.6	Juni
Juli	6.1	6.3	8.1	6.8	27.1	8	8	5	0	0	1	1	13	1	0	0	0	0	2	28	7	3	1	52	0.6	Juli
August . . .	7.5	8.0	8.9	8.1	69.6	21	21	11	0	0	1	0	18	0	0	0	0	0	0	22	6	3	4	58	0.7	August
September .	8.2	7.9	8.0	8.0	219.9	21	21	17	0	0	2	0	16	0	0	0	2	1	6	13	8	8	4	48	0.7	September
Oktober . .	8.0	8.4	7.9	8.1	176.5	17	17	15	10	1	1	1	20	0	0	0	0	2	3	22	9	3	11	43	1.2	Oktober
November .	7.5	7.7	7.0	7.4	104.4	19	19	12	12	0	0	3	16	0	0	0	0	13	2	2	10	1	3	59	0.7	November
December .	7.3	6.6	6.4	6.8	78.7	12	11	10	7	0	0	2	13	0	0	0	1	21	4	9	3	0	6	49	0.9	December
Jahr	6.9	7.0	7.1	7.0	1247.4	175	172	136	75	1	5	37	178	1	0	2	7	95	72	174	96	36	70	543	0.9	Jahr

Hellesylt.

H = 11 m h_t = 6.1 m h_r = 1.2 m

Monat.	Bewölkung. I	II	III	Mittel.	Niederschlag. Summe.	Zahl der Tage mit Niederschlag.	≧0.1 mm.	≧1.0 mm.	Schnee. ≧0.1 mm.	Hagel.	Nebel.	Heiter.	Trübe.	Gewitter.	Sturm.	Windverteilung. N	NE	E	SE	S	SW	W	NW	C	Windstärke. Mittel.	Monat.
Januar . . .	7.4	6.7	7.0	7.0	398.5	19	18	18	4	0	8	6	17	0	0	0	2	0	0	18	29	40	4	0	2.3	Januar
Februar . .	7.7	6.9	7.4	7.3	171.6	16	13	13	8	0	7	5	17	0	0	1	0	14	0	4	33	30	1	1	1.9	Februar
März	6.8	6.6	8.3	7.2	131.5	21	12	12	8	0	4	3	16	0	0	4	1	10	0	4	23	45	5	1	1.7	März
April	5.7	5.3	6.4	5.8	50.3	11	9	9	3	0	1	5	12	0	0	9	0	1	0	54	18	6	1	1	1.9	April
Mai	5.3	5.3	6.5	5.7	29.3	11	6	6	0	0	0	6	13	0	0	11	3	6	6	51	6	2	7	1	1.9	Mai
Juni	7.5	6.0	6.0	6.5	128.2	15	14	13	0	0	8	4	13	0	0	1	16	8	8	31	10	7	7	2	1.9	Juni
Juli	5.8	5.4	6.4	5.9	41.6	16	7	7	0	0	5	6	9	1	0	15	2	14	5	22	7	0	0	28	1.2	Juli
August . . .	8.3	8.5	8.3	8.4	124.2	21	18	18	0	0	10	0	21	0	0	26	0	0	1	38	15	0	0	13	1.2	August
September .	8.5	7.1	8.4	8.0	224.6	23	20	19	0	0	6	0	18	0	0	1	0	0	4	12	32	17	17	7	1.4	September
Oktober . .	8.5	8.1	8.5	8.4	231.0	22	19	19	4	0	7	2	24	0	0	0	3	0	0	16	31	25	17	1	2.0	Oktober
November .	7.1	7.7	8.3	7.7	117.5	21	18	18	7	0	8	3	19	0	0	3	1	0	0	3	21	31	14	17	1.6	November
December .	6.9	7.1	6.5	6.8	81.4	19	14	13	7	0	5	2	14	0	0	4	17	2	0	13	8	24	23	2	1.5	December
Jahr	7.1	6.7	7.3	7.1	1729.7	215	168	165	41	0	69	42	193	1	0	75	45	55	24	266	233	227	96	74	1.7	Jahr

Runde.

$\lambda = 5^0\ 38'$ E $= 22^m\ 32^s$ $\varphi = 62^0\ 23'$ N $C_g = 1.55$ mb bei 1017 mb

Monat.	Luftdruck. (Normalschwere). Mittel.	Luft-Temperatur. Min.	I	II	III	Mittel.	beobachtetes Max.	Dat.	Min.	Dat.	Absolute Feuchtigkeit. I	II	III	Mittel.	Relat. Feuchtigk. I	II	III	Mittel	Monat.
Januar	1005.6	2.4	4.7	5.3	4.8	4.8	11.8	14	-1.4	28	4.9	5.0	4.8	4.9	74	74	73	74	Januar
Februar . . .	994.5	0.8	2.5	4.0	3.0	3.0	7.4	5	-1.7	24	4.0	4.1	4.1	4.1	70	66	69	69	Februar
März	1009.9	-0.8	1.0	2.9	1.5	1.5	7.6	24	-6.0	14	3.8	4.0	3.8	3.9	72	69	72	72	März
April	06.2	3.8	5.9	9.0	7.1	6.6	17.1	9	-2.1	4	4.7	4.9	4.7	4.7	66	57	62	64	April
Mai	09.2	7.4	9.9	12.7	10.4	10.2	23.2	17	2.0	2	6.4	6.4	6.1	6.1	70	59	65	69	Mai
Juni	12.9	8.4	10.6	12.8	11.3	10.8	20.8	10	5.2	17	7.7	7.8	7.5	7.5	81	71	75	81	Juni
Juli	11.5	13.2	16.2	18.8	17.0	16.3	26.8	20	10.6	1	10.7	10.9	10.3	10.4	78	68	72	77	Juli
August	07.0	12.7	14.5	16.7	15.1	14.8	23.0	24	9.5	31	9.8	10.0	9.8	9.7	81	70	76	79	August
September . .	03.1	9.2	10.7	12.3	11.2	11.1	15.5	10	6.2	28	7.9	8.1	8.1	7.9	83	76	81	81	September
Oktober . . .	04.5	3.9	5.7	7.0	6.1	6.1	13.0	27	-0.7	18	5.4	5.3	5.1	5.3	77	70	72	74	Oktober
November . .	08.5	1.4	2.9	3.6	3.3	3.2	9.0	19	-3.3	9	4.5	4.7	4.6	4.6	77	78	78	78	November
December . .	996.0	-0.9	1.3	1.8	1.5	1.4	11.0	8	-4.8	18	3.9	3.9	3.9	3.9	76	73	74	75	December
Jahr	1005.7	5.1	7.2	8.9	7.7	7.5	26.8		-6.0		6.1	6.3	6.1	6.1	75	69	72	74	Jahr

Aalesund.

$\lambda = 6^0\ 10'$ E $= 24^m\ 40^s$ $\varphi = 62^0\ 28'$ N $C_g = 1.55$ mb bei 1020 mb

Januar	1007.7	2.2	4.7	5.1	4.4	4.6	13.6	14	-2.5	28	5.2	5.4	5.2	5.3	81	81	82	81	Januar
Februar . . .	996.5	0.6	2.5	3.9	3.0	2.9	8.4	5	-1.8	20	4.3	4.6	4.3	4.4	77	76	74	76	Februar
März	1011.6	-1.3	0.9	2.4	1.3	1.2	7.6	18	-6.9	14	4.1	4.4	4.1	4.2	81	78	80	80	März
April	07.9	3.3	6.0	8.3	6.8	6.3	13.2	7	-2.2	4	5.1	5.7	5.3	5.3	73	70	72	73	April
Mai	10.8	7.5	10.2	11.6	10.4	10.0	23.2	17	1.4	2	7.2	7.5	7.4	7.3	77	74	78	78	Mai
Juni	14.3	8.8	11.2	11.9	11.5	10.8	18.0	9	4.7	17	8.5	8.6	8.4	8.3	85	83	84	85	Juni
Juli	12.9	13.7	16.6	16.8	16.4	15.9	25.8	26	10.3	10	11.8	11.9	11.6	11.6	84	84	84	84	Juli
August	08.5	13.2	14.9	16.0	15.1	14.8	20.2	10	9.8	15	10.3	10.6	10.6	10.3	82	78	82	82	August
September . .	04.6	9.2	10.8	12.2	11.3	11.1	14.9	20	5.9	28	7.9	8.3	8.2	8.0	82	79	82	82	September
Oktober . . .	06.1	3.7	5.7	6.9	5.9	6.0	13.6	24	-1.6	14	5.6	5.6	5.4	5.5	80	74	77	78	Oktober
November . .	10.1	0.7	2.6	3.4	2.9	2.9	10.0	19	-4.7	28	4.6	4.9	4.6	4.7	82	80	79	80	November
December . .	997.8	-1.1	1.2	1.7	1.5	1.4	12.2	9	-5.6	15	4.0	4.2	4.2	4.1	78	80	79	79	December
Jahr	1007.4	5.0	7.3	8.4	7.5	7.3	25.8		-6.9		6.6	6.8	6.6	6.6	80	78	79	80	Jahr

Ona.

$\lambda = 6^0\ 33'$ E $= 26^m\ 12^s$ $\varphi = 62^0\ 52'$ N

Januar		2.8	4.6	5.0	4.6	4.7	11.3	14	-1.8	28	5.2	5.3	5.1	5.2	81	80	79	80	Januar
Februar . . .		1.2	2.7	3.5	3.3	3.1	7.0	14	-1.5	21	4.2	4.2	4.3	4.2	74	70	71	72	Februar
März		-0.4	1.2	1.9	1.5	1.3	6.7	18	-5.7	14	4.0	4.1	4.0	4.0	74	76	76	75	März
April		3.6	5.6	6.7	5.7	5.5	11.6	7	-1.4	4	4.9	5.1	5.2	5.0	71	69	74	73	April
Mai		6.7	8.7	9.4	8.9	8.4	18.7	17	1.8	2	6.6	6.4	6.7	6.5	78	72	78	79	Mai
Juni		8.6	10.5	11.1	10.4	10.2	16.4	10	5.0	17	7.9	7.8	7.6	7.6	83	79	81	83	Juni
Juli		13.3	15.5	16.3	15.3	15.1	25.8	26	10.3	2	10.8	10.9	10.7	10.6	83	79	83	84	Juli
August		13.0	14.5	15.3	14.5	14.4	20.0	24	9.7	31	10.2	10.1	10.1	9.9	84	79	83	84	August
September . .		9.6	11.0	11.8	11.2	11.0	14.3	18	7.3	28	8.2	8.3	8.3	8.2	84	81	84	84	September
Oktober . . .		4.3	5.9	6.6	6.0	6.1	11.7	24	0.3	13	5.6	5.5	5.5	5.5	79	74	78	78	Oktober
November . .		1.7	3.2	3.4	3.1	3.1	8.6	19	-3.7	9	4.5	4.7	4.5	4.6	76	78	76	76	November
December . .		-0.4	1.3	1.6	1.6	1.5	8.8	8	-4.0	15	3.9	3.9	3.9	3.9	72	74	74	73	December
Jahr		5.3	7.1	7.7	7.2	7.0	25.8		-5.7		6.3	6.4	6.3	6.3	78	76	78	78	Jahr

Molde.

$\lambda = 7^0\ 10'$ E $= 28^m\ 40^s$ $\varphi = 62^0\ 44'$ N $C_g = 1.55$ mb bei 1015 mb

Januar	1005.5	0.2	2.6	3.7	2.5	2.8	12.0	14	-7.1	28	5.0	4.9	4.6	4.8	79	80	82	80	Januar
Februar . . .	994.9	-1.1	1.0	3.2	1.7	1.8	7.4	14	-6.8	20	4.1	4.8	4.4	4.4	78	81	82	80	Februar
März	1009.3	-3.3	0.1	2.2	0.8	0.6	6.4	18	-12.0	13	4.0	4.4	4.2	4.2	80	80	85	82	März
April	05.9	1.2	5.7	8.0	6.2	5.5	11.2	10	-2.2	4	4.2	5.0	4.9	4.6	60	63	67	64	April
Mai	09.0	6.0	11.1	13.7	11.5	10.6	22.0	17	-1.0	2	6.7	6.9	6.8	6.7	68	59	67	70	Mai
Juni	12.0	8.2	12.1	14.8	12.4	11.8	21.0	10	3.7	17	8.1	8.1	7.7	7.8	77	65	72	78	Juni
Juli	10.8	13.3	17.9	20.3	18.0	17.3	26.4	21	9.4	10	10.3	11.3	11.1	10.7	68	64	73	72	Juli
August	06.3	11.9	15.0	17.3	14.9	14.8	22.6	25	8.8	16	10.0	9.9	9.6	9.7	79	68	76	78	August
September . .	02.2	7.7	10.4	12.6	10.8	10.7	16.8	20	4.8	9	7.5	8.3	7.8	7.8	79	77	82	80	September
Oktober . . .	03.8	1.8	4.6	6.1	4.1	4.7	13.7	24	-6.0	14	4.7	5.1	4.9	4.9	73	72	79	75	Oktober
November . .	08.0	-1.2	0.7	1.9	1.0	1.1	8.4	18	-8.9	30	4.1	4.3	4.1	4.2	79	80	78	79	November
December . .	996.2	-4.8	-1.7	-0.8	-1.1	-1.3	8.2	8	-11.4	15	3.0	3.7	3.5	3.4	69	79	76	73	December
Jahr	1005.3	3.3	6.6	8.6	6.9	6.7	26.4		-12.0		6.0	6.4	6.1	6.1	74	72	77	76	Jahr

1925.

Runde.

$H = 26\,m$, $H_b = 20.5\,m$ — $h_t = 1.7\,m$ — $h_r = 1.4\,m$

Monat.	Bewölkung. I	II	III	Mittel.	Niederschlag. Summe.	Zahl der Tage mit: Niederschlag.	≧0.1 mm.	≧1.0 mm.	Schnee. ≧0.1 mm.	Hagel.	Nebel.	Heiter.	Trübe.	Gewitter.	Sturm.	Vindverteilung. N	NE	E	SE	S	SW	W	NW	C	Windstärke. Mittel.	Monat.
Januar . . .	8.1	7.9	6.8	7.6	165.7	22	21	19	2	7	0	3	18	0	6	0	3	4	5	18	27	17	9	10	4.6	Januar
Februar . .	6.9	6.7	6.1	6.6	157.1	17	16	16	8	6	0	2	12	0	4	2	6	11	17	14	13	10	8	3	4.1	Februar
März	6.8	7.5	8.2	7.5	157.6	26	23	19	20	4	0	4	18	0	0	6	9	10	10	20	10	13	11	4	3.7	März
April	6.4	5.9	5.4	5.9	36.6	16	13	9	4	3	0	4	10	0	0	1	15	13	11	17	10	15	2	6	2.8	April
Mai	5.5	5.6	6.2	5.8	19.6	14	9	6	0	0	0	6	9	0	0	4	40	15	8	11	7	3	0	5	3.1	Mai
Juni	8.2	7.1	6.8	7.4	108.1	18	16	16	0	0	0	2	17	0	0	5	30	8	2	10	13	9	5	8	3.0	Juni
Juli	6.4	6.3	7.0	6.6	46.9	17	17	7	0	0	0	5	11	0	0	5	20	17	4	4	15	18	0	10	2.0	Juli
August . . .	8.2	8.0	7.6	7.9	106.8	22	21	19	0	0	0	0	20	0	0	4	19	12	6	11	14	10	5	12	2.7	August
September .	8.9	8.2	8.5	8.5	173.9	25	24	21	0	0	0	0	23	0	0	7	12	10	5	11	17	7	9	12	3.0	September
Oktober . .	7.9	8.2	7.6	7.9	156.7	29	28	24	7	6	0	2	20	0	0	3	5	9	17	11	12	11	21	4	3.3	Oktober
November .	7.4	8.2	6.9	7.5	127.5	25	22	20	14	2	0	3	16	0	0	6	9	11	14	17	13	4	11	5	3.3	November
December .	6.4	8.2	6.7	7.1	119.8	25	24	19	16	2	0	2	13	0	0	5	4	6	24	23	8	3	10	10	3.0	December
Jahr	7.3	7.3	7.0	7.2	1376.3	256	234	195	71	30	0	33	187	0	10	48	172	126	123	167	159	120	91	89	3.2	Jahr

Aalesund.

$H = 2\,m$, $H_b = 6.3\,m$ — $h_t = 4.3\,m$ — $h_r = 1.6\,m$

Monat.	I	II	III	Mittel.	Niederschlag. Summe.	Niederschlag.	≧0.1 mm.	≧1.0 mm.	Schnee. ≧0.1 mm.	Hagel.	Nebel.	Heiter.	Trübe.	Gewitter.	Sturm.	N	NE	E	SE	S	SW	W	NW	C	Windstärke. Mittel.	Monat.
Januar . . .	7.8	8.0	8.4	8.1	134.4	21	20	17	10	3	2	3	21	2	7	1	0	1	18	17	26	19	7	4	4.6	Januar
Februar . .	8.0	7.4	8.5	8.0	141.2	17	17	16	14	4	0	1	18	2	3	2	2	25	20	6	14	8	4	3	3.9	Februar
März	7.6	8.1	7.9	7.9	158.2	22	22	20	20	1	0	0	18	0	0	2	9	15	20	8	21	8	10	0	3.7	März
April	6.1	5.9	5.6	5.9	36.2	15	10	8	3	2	0	3	9	0	1	1	10	5	35	7	21	4	3	4	3.2	April
Mai	5.3	5.5	6.4	5.7	25.4	13	8	7	0	0	1	4	8	0	0	4	36	10	19	5	10	2	4	3	2.8	Mai
Juni	7.6	6.7	7.3	7.2	99.7	17	14	13	0	0	0	2	16	0	0	12	28	2	6	1	15	5	11	10	3.3	Juni
Juli	7.1	7.2	7.1	7.1	24.9	20	15	6	0	0	8	2	15	2	0	19	13	8	4	0	0	15	22	12	2.0	Juli
August . . .	8.2	7.9	8.4	8.2	104.7	23	21	15	0	0	0	0	19	1	0	4	20	10	6	3	12	11	12	15	2.6	August
September .	8.8	8.1	8.5	8.5	167.0	25	19	17	0	0	0	0	19	0	1	8	7	5	4	6	19	11	17	13	2.9	September
Oktober . .	8.3	8.3	8.2	8.3	160.8	28	25	24	13	6	0	0	21	0	0	10	2	9	19	6	16	10	11	10	3.3	Oktober
November .	8.7	8.6	8.2	8.5	131.5	23	22	17	13	4	0	1	22	0	1	5	6	23	14	11	14	3	10	4	3.3	November
December .	7.6	8.1	7.9	7.9	115.2	21	20	16	15	1	0	0	17	0	0	4	8	19	27	12	12	6	3	2	3.1	December
Jahr	7.6	7.5	7.7	7.6	1299.2	245	213	176	88	21	11	16	203	7	13	72	141	132	192	82	180	102	114	80	3.2	Jahr

Ona.

$H = 9\,m$ — $h_t = 1.3\,m$ — $h_r = 0.9\,m$

Monat.	I	II	III	Mittel.	Niederschlag. Summe.	Niederschlag.	≧0.1 mm.	≧1.0 mm.	Schnee. ≧0.1 mm.	Hagel.	Nebel.	Heiter.	Trübe.	Gewitter.	Sturm.	N	NE	E	SE	S	SW	W	NW	C	Windstärke. Mittel.	Monat.
Januar . . .	7.6	7.6	7.2	7.5	83.9	22	19	16	6	1	0	2	18	4	7	2	3	6	6	16	31	15	9	5	4.8	Januar
Februar . .	7.7	6.9	6.5	7.0	108.0	19	18	16	14	0	0	0	12	2	3	4	8	10	12	15	20	8	4	3	3.8	Februar
März	7.1	7.7	7.7	7.5	99.5	25	24	18	20	3	0	1	18	0	1	8	16	5	4	14	24	9	13	0	3.7	März
April	6.0	5.9	5.3	5.7	41.7	13	12	11	4	0	0	3	8	0	2	2	21	6	9	5	14	14	10	9	2.6	April
Mai	5.6	5.3	6.1	5.7	13.5	14	7	4	0	0	1	4	6	0	0	7	45	8	8	6	5	6	2	6	2.5	Mai
Juni	7.7	6.5	6.9	7.0	54.1	17	14	12	0	0	2	0	15	0	0	12	26	2	4	3	13	15	9	6	2.9	Juni
Juli	6.3	6.5	6.5	6.4	14.0	16	13	4	0	0	7	4	10	3	0	14	24	1	4	6	8	19	10	7	1.8	Juli
August . . .	7.4	7.5	7.7	7.5	67.4	21	18	12	0	0	1	0	15	1	0	10	25	9	3	4	15	16	5	6	2.8	August
September .	8.1	7.7	7.8	7.9	140.9	23	22	16	0	0	2	1	16	0	0	14	12	7	3	4	15	21	13	1	3.5	September
Oktober . .	7.9	8.1	8.0	8.0	162.8	26	26	23	11	9	0	0	16	0	4	6	11	8	14	6	15	17	14	2	4.1	Oktober
November .	7.8	8.6	8.0	8.1	119.7	25	24	18	14	2	0	1	19	0	1	12	8	10	9	12	19	8	9	3	3.7	November
December .	7.2	7.9	7.5	7.5	88.4	22	20	15	13	0	0	0	17	0	0	10	4	5	22	19	13	8	9	3	3.5	December
Jahr	7.2	7.2	7.1	7.2	993.9	243	217	165	82	15	13	16	170	10	18	101	203	77	98	110	192	156	107	51	3.3	Jahr

Molde.

$H = 16\,m$, $H_b = 17.9\,m$ — $h_t = 1.8\,m$ — $h_r = 1.1\,m$

Monat.	I	II	III	Mittel.	Niederschlag. Summe.	Niederschlag.	≧0.1 mm.	≧1.0 mm.	Schnee. ≧0.1 mm.	Hagel.	Nebel.	Heiter.	Trübe.	Gewitter.	Sturm.	N	NE	E	SE	S	SW	W	NW	C	Windstärke. Mittel.	Monat.
Januar . . .	6.4	6.2	6.4	6.3	264.3	15	15	14	4	0	3	6	14	1	0	0	0	9	2	0	40	2	10	30	1.6	Januar
Februar . .	6.8	6.2	5.5	6.2	151.2	15	15	14	12	1	0	6	11	0	0	0	5	6	5	1	23	4	0	40	1.0	Februar
März	6.1	6.9	7.5	6.8	207.4	17	17	17	14	0	0	4	15	0	0	0	0	29	1	0	31	7	3	22	1.3	März
April	4.4	4.1	4.3	4.3	81.8	9	9	9	4	0	0	10	6	0	0	0	0	15	1	0	18	1	4	51	0.7	April
Mai	4.0	3.5	5.0	4.2	08.1	6	6	6	0	0	0	10	3	0	0	0	5	31	1	0	10	4	0	42	0.7	Mai
Juni	6.4	5.6	5.9	6.0	99.1	15	15	12	0	0	0	8	12	0	0	2	4	13	0	0	18	7	7	39	1.0	Juni
Juli	5.0	5.0	6.6	5.5	24.7	12	9	7	0	0	0	7	7	2	0	0	0	13	0	0	14	4	0	62	0.4	Juli
August . . .	6.6	6.5	7.6	6.9	150.9	19	19	18	0	0	0	1	13	1	0	0	0	9	0	0	36	2	0	46	0.9	August
September .	6.1	6.0	5.5	5.9	313.9	18	18	16	0	0	0	4	7	1	0	1	1	1	9	0	18	12	8	40	1.2	September
Oktober . .	7.3	7.5	6.0	6.9	263.1	22	21	20	9	1	0	2	13	0	0	0	0	21	1	0	19	12	11	29	1.5	Oktober
November .	6.8	7.7	7.5	7.3	166.9	18	18	17	12	1	0	3	15	0	0	1	4	20	0	0	16	3	14	32	1.1	November
December .	6.1	6.5	5.4	6.0	151.4	19	18	15	12	0	0	3	10	0	0	0	4	32	8	0	13	1	12	23	1.1	December
Jahr	6.0	6.0	6.1	6.0	1882.8	185	180	165	67	3	3	64	126	5	0	4	23	199	28	1	256	59	69	456	1.0	Jahr

Lesjeværk.

$\lambda = 8^0\ 34'$ E $= 34^m\ 16^s$ $\varphi = 62^0\ 11'$ N

Monat.	Luftdruck. Normalschwere Mittel.	Luft-Temperatur. Min.	I	II	III	Mittel.	beobachtetes Max.	Dat.	Min.	Dat.	Absolute Feuchtigkeit. I	II	III	Mittel.	Relat. Feuchtigk. I	II	III	Mittel.	Monat.
Januar		-10.1	-7.1	-4.7	-5.4	-5.9	5.4	14	-27.4	28	2.5	3.0	2.7	2.7	82	87	80	82	Januar
Februar . . .		-11.0	-7.7	-3.1	-5.5	-5.9	2.2	14	-28.8	20	2.4	2.8	2.6	2.6	81	71	78	78	Februar
März		-12.8	-9.0	-1.9	-6.3	-6.6	5.6	30	-27.8	9	2.2	2.4	2.3	2.3	81	56	70	73	März
April		-3.5	-0.4	5.0	1.3	0.8	9.4	10	-13.0	1	3.1	3.3	3.1	3.1	65	49	58	62	April
Mai		3.3	7.0	10.4	7.7	7.0	18.5	18	-2.7	15	4.5	4.8	4.6	4.5	58	50	58	60	Mai
Juni		5.8	10.7	13.8	11.1	11.3	23.5	9	1.3	3	5.5	5.3	5.5	5.3	57	46	56	61	Juni
Juli		9.7	16.4	20.1	16.4	15.5	28.6	21	5.2	11	8.7	8.0	8.1	8.2	64	46	59	66	Juli
August		8.3	11.4	14.8	11.9	11.6	21.1	8	3.5	31	8.1	7.5	7.4	7.6	81	60	72	77	August
September . .		2.8	5.1	10.4	6.8	6.5	13.9	17	-2.1	26	5.5	5.4	5.8	5.5	83	58	77	77	September
Oktober . . .		-4.3	-1.6	1.8	0.1	-0.4	8.4	9	-20.0	18	3.8	3.9	3.9	3.9	87	70	80	81	Oktober
November . .		-12.0	-8.9	-7.0	-7.6	-8.0	3.8	19	-24.2	10	2.5	2.6	2.7	2.6	92	86	90	90	November
December . .		-17.1	-12.9	-11.3	-12.3	-12.3	0.0	4	-28.8	14	2.0	2.2	2.0	2.1	93	90	89	91	December
Jahr		-3.4	0.2	4.0	1.5	1.1	28.6		-28.8		4.2	4.3	4.2	4.2	77	64	72	75	Jahr

Sundalen.

$\lambda = 9^0\ 6'$ E $= 36^m\ 24^s$ $\varphi = 62^0\ 33'$ N

Januar		-4.4	-1.0	-0.5	-0.3	-0.8	11.0	18	-14.2	29									Januar
Februar . . .		-5.8	-2.5	1.2	-1.1	-1.2	7.5	12	-14.8	20									Februar
März		-8.4	-5.2	0.4	-2.6	-3.2	9.0	30	-20.1	14									März
April		-1.9	1.9	7.8	3.1	3.0	11.5	6	-7.3	2									April
Mai		3.9	9.0	14.2	11.0	9.4	22.6	17	-1.7	2									Mai
Juni		6.7	11.2	15.4	11.4	11.3	26.0	10	3.6	18									Juni
Juli		12.4	16.6	20.6	17.2	16.6	29.4	22	7.0	11									Juli
August		9.7	13.1	16.7	13.0	13.1	21.0	7	4.9	31									August
September .		5.0	7.9	12.2	8.6	8.7	17.2	16	1.7	29									September
Oktober . . .		-2.1	1.0	3.9	1.3	1.7	11.6	24	-12.3	19									Oktober
November . .		-5.7	-3.5	-2.4	-3.1	-3.2	9.1	19	-18.3	30									November
December . .		-10.3	-7.0	-6.0	-6.1	-6.5	4.9	5	-20.7	15									December
Jahr		-0.1	3.5	7.0	4.4	4.1	29.4		-20.7										Jahr

Sundalsøren.

$\lambda = 8^0\ 34'$ E $= 34^m\ 16^s$ $\varphi = 62^0\ 41'$ N $C_y = 1.55$ mb bei 1023 mb

Januar	1007.7	-1.5	1.3	2.4	2.6	2.0	12.4	14	-9.6	29	3.8	3.7	3.9	3.8	71	67	69	70	Januar
Februar . . .	997.9	-2.0	0.7	2.6	1.7	1.5	8.8	14	-10.6	21	4.0	4.2	4.1	4.1	77	75	76	76	Februar
März	1011.8	-4.6	-2.5	0.9	-0.4	-1.1	10.6	30	-15.0	14	2.8	3.6	3.4	3.3	67	68	71	69	März
April	08.6	1.7	4.5	9.1	7.5	5.9	14.2	10	-3.8	1	3.9	4.4	4.4	4.1	60	51	57	59	April
Mai	11.5	6.1	9.5	14.1	12.6	10.5	22.6	17	-0.2	2	5.9	6.2	6.2	6.0	66	52	57	64	Mai
Juni	14.0	7.7	10.3	14.2	13.2	11.3	25.2	10	4.7	3	8.0	7.8	8.1	7.8	86	65	72	85	Juni
Juli	12.5	13.7	16.1	19.7	18.6	16.9	29.0	26	8.8	12	11.1	11.7	11.8	11.3	82	69	74	80	Juli
August	08.7	11.5	13.8	16.8	15.4	14.3	23.0	26	7.3	31	9.7	9.9	9.8	9.7	83	70	76	80	August
September . .	04.8	6.5	9.1	12.1	10.7	9.9	18.4	18	1.6	28	7.2	7.6	7.8	7.4	84	73	81	81	September
Oktober . . .	06.3	0.8	3.7	5.4	4.4	4.1	14.0	27	-8.0	15	4.5	4.6	4.5	4.5	73	68	70	71	Oktober
November . .	10.6	-3.3	-1.1	0.2	-0.3	-0.6	10.8	19	-14.0	30	3.4	3.6	3.7	3.6	74	72	76	75	November
December . .	998.8	-6.4	-2.8	-2.4	-2.7	-2.7	8.2	8	-16.1	15	2.7	2.7	2.7	2.7	66	62	64	65	December
Jahr	1007.8	2.5	5.2	7.9	6.9	6.0	29.0		-16.1		5.6	5.8	5.9	5.7	74	66	70	73	Jahr

Vinjeøren.

$\lambda = 8^0\ 59'$ E $= 35^m\ 56^s$ $\varphi = 63^0\ 12'$ N $C_y = 1.55$ mb bei 989 mb

Januar	1005.5		1.3	2.4	1.7	1.7	11.0	14	-9.4	29	4.1	4.4	4.4	4.3	80	78	81	80	Januar
Februar	996.2		-0.8	2.1	-0.3	-0.1	7.1	14	-12.0	25	3.6	3.9	3.5	3.7	78	71	73	75	Februar
März	1009.8		-3.4	1.3	-1.6	-1.9	6.0	18	-17.2	14	3.0	3.4	3.3	3.2	79	67	76	76	März
April	07.0		4.0	9.0	5.2	4.4	14.0	23	-4.1	2	4.4	4.7	4.5	4.4	71	53	67	70	April
Mai	10.5		10.0	13.6	11.2	9.8	22.8	17	0.0	2	6.1	6.0	6.2	6.0	67	52	62	68	Mai
Juni	12.7		11.6	14.1	12.6	11.7	22.3	10	4.2	17	7.7	8.3	7.9	7.8	76	69	73	77	Juni
Juli	11.8		17.8	20.9	18.7	17.7	29.8	26	7.0	10	11.2	11.2	11.0	11.0	74	62	69	74	Juli
August	07.0		14.2	16.9	14.7	14.1	23.0	10	6.0	17	9.9	9.9	10.0	9.8	83	70	81	83	August
September . .	03.0		8.4	12.7	10.1	9.5	17.5	18	2.6	28	7.3	7.7	8.0	7.6	89	71	87	90	September
Oktober . . .	04.2		1.9	4.7	2.5	2.7	11.4	25	-12.0	18	4.7	5.2	4.8	4.9	87	80	85	85	Oktober
November . .	08.6		-1.7	0.3	-1.2	-1.1	7.7	19	-16.0	30	3.7	3.8	3.6	3.7	84	77	82	82	November
December . .	996.7		-3.7	-2.9	-3.1	-3.3	7.0	9	-18.6	16	3.0	3.1	3.1	3.1	79	78	79	79	December
Jahr	1006.1		5.0	7.9	5.9	5.4	29.8		-18.6		5.7	6.0	5.9	5.8	79	69	76	78	Jahr

1925.

Lesjeværk.

H = ca. 630 m h_t = 1.4 m h_r = 1.6 m

Monat.	Bewölkung. I	II	III	Mittel.	Niederschlag. Summe.	Zahl der Tage mit Niederschlag.	0.1 mm.	1.0 mm.	Schnee.	0.1 mm.	Hagel.	Nebel.	Heiter.	Trübe.	Gewitter.	Sturm.	Windverteilung. N	NE	E	SE	S	SW	W	NW	C	Windstärke Mittel.	Monat.
Januar . . .	6.4	6.0	6.3	6.2	86.8	11	11	10	10	0	0	6	10	0	0	3	0	0	0	25	1	0	31	33	1.2	Januar
Februar . .	7.4	7.8	7.3	7.6	38.2	9	9	7	9	0	0	2	14	0	0	0	0	0	0	43	1	8	13	19	1.5	Februar
März	6.3	6.4	7.2	6.6	27.3	10	10	7	10	0	0	4	10	0	0	8	0	0	2	23	0	18	20	22	1.2	März
April	5.7	5.7	5.7	5.7	2.8	3	2	1	2	0	0	5	7	0	0	2	0	0	0	50	0	10	14	14	1.3	April
Mai	7.0	7.1	7.5	7.2	15.4	7	7	6	3	0	0	3	17	0	0	1	0	0	1	53	3	22	8	5	1.6	Mai
Juni	6.9	6.6	6.7	6.7	13.6	8	8	5	0	0	0	2	13	0	0	0	0	0	0	5	1	39	39	6	1.6	Juni
Juli	6.8	7.5	8.0	7.4	26.8	8	8	7	0	0	0	0	15	0	0	0	0	0	0	33	2	31	13	14	1.2	Juli
August . . .	8.7	8.5	8.3	8.5	82.4	18	18	17	0	0	0	0	20	0	0	0	0	0	0	28	4	33	23	5	1.3	August
September .	7.4	6.6	7.0	7.0	67.4	12	12	10	0	0	0	2	12	0	0	11	0	0	0	26	0	4	16	33	1.2	September
Oktober . .	8.2	7.9	7.7	7.9	78.2	12	11	11	9	0	0	1	20	0	0	21	0	0	0	27	2	4	16	23	1.5	Oktober
November .	7.9	7.4	7.4	7.6	61.7	11	11	9	10	0	0	2	17	0	0	1	0	0	0	23	0	4	21	41	0.8	November
December .	7.4	6.7	6.1	6.7	28.4	7	7	7	7	0	0	4	12	0	0	1	0	0	5	20	0	2	12	53	0.9	December
Jahr	7.2	7.0	7.1	7.1	529.0	116	114	97	60	0	0	31	167	0	0	48	0	0	8	356	14	175	226	268	1.3	Jahr

Sundalen.

H = 200 m h_t = 1.6 m h_r = 1.2 m

Monat.	I	II	III	Mittel.	Niederschlag. Summe.	Niederschlag.	0.1 mm.	1.0 mm.	Schnee.	0.1 mm.	Hagel.	Nebel.	Heiter.	Trübe.	Gewitter.	Sturm.	N	NE	E	SE	S	SW	W	NW	C	Windstärke Mittel.	Monat.
Januar . . .	7.0	6.3	6.2	6.5	125.1	13	12	12	8	0	0	4	11	0	0	0	0	5	1	1	10	11	1	64	0.4	Januar
Februar . .	7.0	6.6	7.1	6.9	51.6	12	10	10	10	0	0	3	10	0	0	0	0	4	3	0	10	3	0	64	0.3	Februar
März	6.5	7.0	7.4	7.0	102.0	16	12	11	12	0	0	2	13	0	0	0	0	1	0	0	2	3	3	84	0.1	März
April	4.7	5.2	4.8	4.9	2.7	7	4	1	1	0	0	8	5	0	0	0	0	0	1	2	2	1	2	82	0.1	April
Mai	5.5	5.9	6.8	6.1	2.8	9	3	2	0	0	0	5	9	0	0	0	0	0	2	4	0	0	5	82	0.1	Mai
Juni	7.0	6.8	7.2	7.0	25.7	14	6	4	0	0	0	1	10	1	0	1	0	0	0	0	0	0	18	71	0.2	Juni
Juli	6.2	7.2	8.2	7.2	79.7	18	14	12	0	0	0	0	14	6	0	0	0	0	0	0	0	2	3	88	0.0	Juli
August . . .	7.9	7.6	8.4	8.0	94.9	20	16	15	0	0	0	0	17	2	0	0	0	0	0	3	2	0	2	86	0.1	August
September .	7.4	7.1	7.1	7.2	87.9	19	14	13	0	0	0	0	16	0	0	0	0	0	4	1	3	0	5	77	0.2	September
Oktober . .	8.1	7.7	7.3	7.7	195.9	14	13	13	10	0	0	1	17	0	0	0	0	0	0	7	3	0	5	78	0.2	Oktober
November .	7.0	7.9	7.0	7.3	127.4	13	9	9	8	0	0	1	14	0	0	0	0	4	0	0	0	3	0	83	0.1	November
December .	7.3	7.2	7.4	7.3	78.1	12	10	10	9	0	0	2	13	0	0	0	0	3	0	4	2	0	0	84	0.1	December
Jahr	6.8	6.9	7.1	6.9	973.8	167	123	112	58	0	0	27	149	9	0	1	0	17	11	22	34	23	44	943	0.2	Jahr

Sundalsøren.

H = 5 m, H_b = 5.9 m h_t = 2.2 m h_r = 1.3 m

Monat.	I	II	III	Mittel.	Niederschlag. Summe.	Niederschlag.	0.1 mm.	1.0 mm.	Schnee.	0.1 mm.	Hagel.	Nebel.	Heiter.	Trübe.	Gewitter.	Sturm.	N	NE	E	SE	S	SW	W	NW	C	Windstärke Mittel.	Monat.
Januar . . .	6.4	6.5	5.5	6.1	142.6	18	15	13	6	0	0	5	11	0	4	0	0	0	21	27	4	8	19	14	1.6	Januar
Februar . .	8.3	7.1	6.6	7.3	81.7	16	15	14	10	1	0	2	14	0	0	0	0	0	17	41	4	3	15	4	1.9	Februar
März	7.3	7.5	8.2	7.7	104.2	20	17	14	13	0	0	3	17	0	0	0	0	0	14	27	2	2	29	19	1.1	März
April	5.7	5.8	6.4	6.0	22.5	8	6	5	2	0	0	6	9	0	0	0	0	2	7	38	2	7	24	10	1.2	April
Mai	5.8	6.9	6.6	6.4	13.3	11	6	4	0	0	0	4	12	0	0	0	0	0	18	21	1	6	38	9	1.2	Mai
Juni	7.8	7.3	7.6	7.6	33.2	17	13	12	0	0	0	0	16	0	0	0	0	0	0	1	0	8	73	8	1.1	Juni
Juli	6.3	7.0	7.4	6.9	35.3	13	12	8	0	0	0	1	12	2	0	0	0	0	16	5	0	14	34	24	0.9	Juli
August . . .	8.2	7.6	8.5	8.1	101.6	23	19	16	0	0	0	0	19	1	0	0	0	0	6	18	2	1	51	15	1.1	August
September .	8.5	7.2	8.5	8.1	137.7	23	17	13	0	0	1	0	15	0	0	0	0	0	7	8	0	2	39	34	0.9	September
Oktober . .	8.4	8.4	8.2	8.3	154.9	17	16	15	8	0	0	1	22	0	0	0	0	0	12	27	4	1	34	15	1.7	Oktober
November .	7.8	8.2	8.8	8.3	121.2	18	14	14	10	0	0	2	21	0	0	0	0	0	18	26	9	0	32	5	1.5	November
December .	7.5	7.5	7.4	7.5	58.3	16	14	12	10	0	0	2	15	0	0	0	0	0	17	48	4	0	22	2	1.5	December
Jahr	7.3	7.2	7.5	7.4	1006.5	200	164	140	59	1	1	26	183	3	4	0	0	2	153	287	32	52	410	159	1.3	Jahr

Vinjeøren.

H = 16 m, H_b = 16.0 m h_t = 1.6 m h_r = 1.4 m

Monat.	I	II	III	Mittel.	Niederschlag. Summe.	Niederschlag.	0.1 mm.	1.0 mm.	Schnee.	0.1 mm.	Hagel.	Nebel.	Heiter.	Trübe.	Gewitter.	Sturm.	N	NE	E	SE	S	SW	W	NW	C	Windstärke Mittel.	Monat.
Januar . . .	7.5	6.9	6.6	7.0	261.4	19	18	17	4	2	0	3	15	2	3	0	6	22	3	8	12	17	7	18	2.6	Januar
Februar . .	7.2	6.9	5.8	6.6	108.9	20	18	14	13	2	0	4	13	0	0	1	7	27	2	6	5	14	1	21	2.0	Februar
März	5.6	7.4	6.8	6.6	140.5	22	19	16	14	2	0	4	12	0	0	1	12	21	3	2	6	28	8	12	2.3	März
April	5.7	4.8	4.9	5.1	53.1	13	13	9	4	1	0	4	6	0	1	2	16	13	6	3	2	16	8	24	1.7	April
Mai	4.9	5.4	5.8	5.4	19.7	16	12	6	0	1	0	7	9	0	0	11	17	15	7	2	2	11	1	27	1.5	Mai
Juni	8.0	7.4	6.9	7.4	121.0	17	16	13	0	0	0	2	16	0	1	8	14	2	0	2	1	32	7	24	2.2	Juni
Juli	5.7	5.8	6.8	6.1	48.5	16	14	8	0	0	0	5	13	3	0	9	7	19	5	9	2	20	1	21	1.3	Juli
August . . .	7.8	7.4	7.8	7.7	198.6	20	20	17	0	0	0	2	18	0	0	5	4	15	3	5	5	20	6	30	1.4	August
September .	7.0	7.1	8.1	7.4	177.8	21	20	16	0	0	0	1	14	0	1	2	3	19	2	6	9	19	3	27	1.5	September
Oktober . .	7.8	7.3	6.9	7.3	332.9	27	26	20	14	3	0	2	15	0	1	3	1	22	8	2	7	18	11	21	2.3	Oktober
November .	7.0	7.3	7.3	7.2	142.1	21	21	16	16	1	0	1	14	0	1	0	12	23	4	2	6	17	8	18	1.8	November
December .	6.2	6.9	6.2	6.4	150.0	18	18	16	14	1	0	6	12	0	0	2	12	33	8	1	3	13	7	14	1.8	December
Jahr	6.7	6.7	6.7	6.7	1754.5	230	215	168	79	13	0	41	157	5	8	44	111	231	51	48	60	225	68	257	1.9	Jahr

Sandstad.

$\lambda = 9^0\ 6'\ E = 36^m\ 24^s$ $\varphi = 63^0\ 32'\ N$

Monat.	Luftdruck. (Normalschwere). Mittel.	Luft-Temperatur. Min.	I	II	III	Mittel.	beobachtetes Max.	Dat.	Min.	Dat.	Absolute Feuchtigkeit. I	II	III.	Mittel.	Relat. Feuchtigk. I	II	III	Mittel.	Monat.
Januar		1.1	3.8	3.9	3.2	3.5	9.1	18	-3.2	29									Januar
Februar. . . .		-1.1	1.1	2.4	1.4	1.4	7.0	14	-6.3	24									Februar
März		-3.6	-1.0	1.1	0.0	-0.4	7.8	18	-11.0	14									März
April		1.2	5.6	8.2	5.7	5.8	12.2	12	-2.2	1									April
Mai		4.9	10.2	11.8	9.7	9.6	20.5	17	0.1	23									Mai
Juni.		6.8	11.0	12.7	10.7	10.7	20.3	10	1.4	14									Juni
Juli		12.5	17.5	19.3	16.8	16.9	27.8	26	8.4	10									Juli
August		10.7	14.7	16.1	14.2	14.3	23.8	25	5.1	17									August
September . .		7.0	10.4	12.5	10.5	10.4	17.3	18	4.6	4									September
Oktober. . . .		1.0	3.8	5.4	4.1	4.1	10.5	25	-6.8	18									Oktober
November . .		-1.7	0.7	1.4	0.7	0.8	8.2	19	-11.5	30									November
December . .		-3.8	-0.8	-0.6	-0.8	-0.8	8.1	8	-11.8	19									December
Jahr.		2.9	6.4	7.8	6.4	6.4	27.8		-11.8										Jahr

Titran.

$\lambda = 8^0\ 19'\ E = 33^m\ 16^s$ $\varphi = 63^0\ 40'\ N$ $C_g = 1.65$ mb bei 1015 mb

Januar	1005.1	2.0	4.7	4.9	4.5	4.6	9.2	14	-4.2	30									Januar
Februar . . .	995.9	-0.2	2.1	2.6	2.0	2.1	6.2	3	-6.8	24									Februar
März	1009.8	-2.2	0.3	1.7	0.7	0.6	6.2	18	-9.1	14									März
April	07.5	1.9	5.1	7.4	6.3	5.5	12.3	7	-1.3	2									April
Mai	11.7	5.4	9.1	10.8	9.9	8.8	22.5	28	-0.2	1									Mai
Juni.	13.8	7.5	10.7	11.6	10.9	10.2	18.3	10	4.5	17									Juni
Juli	13.0	12.5	16.1	17.8	16.4	15.8	25.4	26	8.5	11									Juli
August	08.0	11.5	14.1	15.7	14.6	14.0	21.3	24	7.7	17									August
September . .	03.5	8.6	10.9	12.3	11.3	11.0	17.9	18	6.1	10									September
Oktober. . . .	04.2	2.3	4.6	6.0	5.0	5.0	10.4	25	-3.3	18									Oktober
November . .	08.6	0.2	2.2	2.3	2.2	2.1	8.4	19	-6.4	30									November
December . .	996.6	-2.6	0.3	1.0	0.6	0.5	7.2	9	-8.3	15									December
Jahr.	1006.5	3.9	6.7	7.8	7.0	6.7	25.4		-9.1										Jahr

Vallersund.

$\lambda = 9^0\ 45'\ E = 39^m\ 0^s$ $\varphi = 63^0\ 52'\ N$

Januar		1.5	3.2	4.0	3.7	3.5	10.0	14	-5.6	29	4.5	4.7	4.7	4.6	76	75	77	76	Januar
Februar . . .		-0.6	0.9	1.6	1.2	1.1	6.7	14	-8.2	20	4.1	4.3	4.1	4.2	78	82	79	79	Februar
März		-4.0	-1.6	0.5	0.3	-0.6	5.8	18	-12.9	11	3.2	3.6	4.0	3.6	71	71	79	75	März
April		1.5	4.9	7.9	6.0	5.3	12.1	7	-1.8	2	4.5	4.7	4.8	4.6	67	58	67	68	April
Mai		5.9	9.6	11.2	10.3	9.3	21.0	17	-0.5	1	6.1	6.4	6.3	6.2	68	64	67	68	Mai
Juni.		7.4	10.7	11.5	11.0	10.1	19.0	10	5.0	17	7.4	7.7	7.7	7.4	77	76	78	78	Juni
Juli		13.5	17.3	18.9	17.8	16.8	28.9	26	9.2	11	10.6	11.1	11.1	10.8	72	69	72	73	Juli
August		11.7	14.3	15.9	15.0	14.2	21.8	10	8.0	16	9.7	9.9	9.9	9.7	80	74	78	80	August
September . .		8.1	10.4	12.0	11.2	10.7	16.9	18	6.2	10	7.6	7.8	7.9	7.7	81	75	80	80	September
Oktober. . . .		2.0	4.1	5.5	4.6	4.5	11.2	25	-5.1	18	4.8	4.9	4.7	4.8	77	71	73	74	Oktober
November . .		-1.5	0.2	0.8	0.5	0.4	8.2	19	-11.2	30	3.7	3.9	3.6	3.7	74	75	71	73	November
December . .		-4.6	-1.3	-1.3	-1.2	-1.4	7.4	8	-13.8	20	3.2	3.2	3.2	3.2	72	69	70	71	December
Jahr.		3.4	6.1	7.4	6.7	6.2	28.9		-13.8		5.8	6.0	6.0	5.9	74	72	74	75	Jahr

Trondhjem.

$\lambda = 10^0\ 25'\ E = 41^m\ 40^s$ $\varphi = 63^0\ 26'\ N$ $C_g = 1.55$ mb bei 994 mb

Januar	1002.8	-1.3	1.0	2.0	1.5	1.4	10.2	14	-9.1	29	3.8	4.1	4.0	4.0	76	75	76	76	Januar
Februar. . . .	994.3	-2.7	-0.5	1.3	0.5	0.2	8.5	12	-11.5	20	3.5	3.6	3.5	3.5	77	70	72	74	Februar
März	1006.9	-6.0	-3.8	0.4	-0.8	-1.9	8.9	18	-17.1	15	3.0	3.2	3.3	3.2	79	66	73	75	März
April	04.6	1.1	3.6	7.4	6.0	4.7	13.4	23	-4.1	2	4.1	4.1	4.4	4.1	69	54	63	67	April
Mai	08.2	5.9	9.2	12.4	12.0	9.8	22.0	18	0.0	2	5.9	5.8	6.0	5.8	68	54	58	65	Mai
Juni.	09.6	8.0	10.5	13.5	12.9	11.2	24.2	10	5.4	18	7.6	7.6	7.4	7.4	80	66	68	77	Juni
Juli	09.2	13.9	17.0	20.4	19.3	17.6	29.0	26	8.7	11	11.2	11.2	10.9	11.0	78	63	67	75	Juli
August	04.3	11.7	14.0	16.8	15.7	14.5	23.2	10	6.2	17	9.5	9.6	9.6	9.4	80	69	73	77	August
September . .	00.7	7.3	9.0	12.2	10.8	10.1	16.6	18	4.4	23	7.1	7.5	7.6	7.3	83	72	79	80	September
Oktober. . . .	01.4	0.3	2.3	4.5	3.1	3.0	11.6	25	-9.5	19	4.6	4.8	4.6	4.7	83	75	79	80	Oktober
November . .	05.9	-3.5	-1.5	-0.7	-1.2	-1.3	8.7	19	-15.8	30	3.3	3.4	3.4	3.4	76	75	78	77	November
December . .	994.2	-7.4	-3.8	-3.4	-3.5	-3.7	5.6	9	-18.2	15	2.9	3.0	2.8	2.9	76	76	73	75	December
Jahr.	1003.5	2.3	4.8	7.2	6.4	5.5	29.0		-18.2		5.5	5.7	5.6	5.6	77	68	72	75	Jahr

1925.

Sandstad.

H = ca. 10 m h_t = 1.4 m h_r = 1.6 m

Monat.	Bewölkung. I	II	III	Mittel.	Niederschlag. Summe.	Zahl der Tage mit Niederschlag.	≥0.1 mm.	≥1.0 mm.	Schnee. ≥0.1 mm.	Hagel.	Nebel.	Heiter.	Trübe.	Gewitter.	Sturm.	Windverteilung. N	NE	E	SE	S	SW	W	NW	C	Windstärke. Mittel.	Monat.
Januar . . .	7.9	7.4	6.2	7.2	195.6	18	18	18	2	0	0	3	16	0	1	2	5	2	23	5	35	15	6	0	3.1	Januar
Februar . .	7.6	7.4	6.5	7.2	112.5	16	16	14	7	1	0	4	15	2	1	2	2	12	28	6	16	7	4	7	3.6	Februar
März	6.5	7.5	7.4	7.1	104.4	20	16	15	13	0	0	2	14	0	0	11	4	2	21	3	29	10	6	7	3.0	März
April	5.7	5.9	5.6	5.7	31.6	8	8	7	3	0	0	5	8	0	0	6	10	8	9	3	19	7	7	21	2.4	April
Mai	5.4	5.8	6.0	5.7	18.3	9	8	5	0	0	0	4	10	1	0	22	22	4	10	4	13	2	2	14	2.6	Mai
Juni	7.8	7.6	7.5	7.6	94.1	17	17	17	0	0	0	1	15	0	0	12	24	2	2	2	21	10	13	4	2.9	Juni
Juli	6.2	6.1	6.5	6.3	18.1	8	6	5	0	0	2	3	11	3	0	10	23	6	2	2	31	0	1	18	1.9	Juli
August . . .	7.7	6.9	7.6	7.4	194.1	16	16	16	0	0	0	2	13	0	0	8	18	3	6	4	16	10	9	19	2.1	August
September .	8.0	7.0	7.3	7.4	209.5	21	21	19	0	0	0	0	13	0	0	8	10	3	14	10	25	2	6	12	2.6	September
Oktober . .	7.5	6.9	6.6	7.0	241.9	24	24	22	7	2	0	2	14	0	0	4	2	6	23	1	20	17	11	10	3.1	Oktober
November .	7.1	8.1	7.3	7.5	112.2	18	17	17	8	0	0	1	15	0	1	6	3	7	34	3	17	11	8	1	3.1	November
December .	7.3	7.0	6.6	7.0	90.1	17	16	15	11	0	0	2	11	0	0	4	5	2	44	3	17	7	9	2	3.1	December
Jahr	7.1	7.0	6.8	6.9	1422.4	192	183	170	51	3	2	29	155	6	3	95	128	57	216	46	259	98	82	115	2.8	Jahr

Titran.

H = 6 m, H_b = 6.5 m h_t = 1.8 m h_r = 1.6 m

Januar . . .	8.9	8.7	8.2	8.6	151.9	24	20	17	4	6	0	0	22	0	4	2	2	3	9	17	40	10	10	0	4.8	Januar
Februar . .	7.9	7.5	7.2	7.5	93.9	21	21	17	14	5	0	1	16	0	1	2	1	5	30	13	18	7	7	1	4.5	Februar
März	7.0	7.6	8.1	7.6	102.8	24	20	19	14	3	0	1	17	0	0	7	8	10	11	14	24	6	12	1	3.9	März
April	6.6	6.5	5.6	6.2	30.6	14	10	8	3	0	0	2	9	0	0	4	12	9	23	5	18	7	12	0	3.2	April
Mai	6.5	6.1	5.8	6.1	23.5	17	11	10	0	0	0	3	9	0	0	5	26	18	15	7	12	4	5	1	3.1	Mai
Juni	8.2	7.5	7.6	7.8	57.6	22	16	13	0	0	0	0	17	0	0	7	18	10	6	2	22	11	12	2	3.3	Juni
Juli	6.5	6.2	6.9	6.5	39.2	16	9	7	0	0	0	3	11	1	0	2	14	23	10	0	20	11	8	5	2.5	Juli
August . . .	8.0	6.9	7.2	7.4	92.5	23	18	13	0	0	0	1	14	0	0	13	14	12	13	4	15	6	16	0	2.8	August
September .	8.1	7.5	7.3	7.6	170.0	22	21	17	0	0	0	2	15	0	0	6	11	9	16	4	31	3	8	2	3.4	September
Oktober . .	7.7	7.9	7.7	7.8	128.9	28	28	21	4	3	0	0	15	0	0	10	4	4	29	3	18	5	19	1	3.7	Oktober
November .	7.9	8.7	7.6	8.1	88.0	25	24	18	12	2	0	1	20	0	0	8	6	6	22	8	22	5	12	1	3.6	November
December .	6.9	7.8	7.5	7.4	66.6	23	22	16	12	1	0	1	16	0	0	4	9	4	33	10	14	7	10	2	3.3	December
Jahr	7.5	7.4	7.2	7.4	1045.5	259	220	176	63	20	0	15	181	1	5	70	125	113	217	87	254	82	131	16	3.5	Jahr

Vallersund.

H = 7 m h_t = 2.0 m h_r = 1.4 m

Januar . . .	8.8	8.7	8.8	8.8	67.0	20	15	13	3	0	0	2	26	1	0	0	2	1	26	10	31	11	12	0	3.4	Januar
Februar . .	8.6	7.8	6.5	7.6	45.5	16	13	12	10	0	0	3	17	0	0	1	5	18	27	5	17	7	4	0	3.8	Februar
März	7.9	7.5	7.8	7.7	82.7	20	19	18	15	0	0	4	23	0	0	4	4	13	19	8	21	10	14	0	3.7	März
April	5.5	5.3	5.2	5.3	19.6	13	10	7	3	0	0	8	12	0	0	5	14	12	20	5	11	10	9	4	3.3	April
Mai	6.2	5.4	5.9	5.8	14.3	9	9	6	1	0	0	7	12	0	0	14	20	3	19	4	9	11	9	4	3.3	Mai
Juni	8.6	7.7	7.5	7.9	44.3	16	15	12	0	0	0	2	19	0	0	22	11	1	1	2	12	16	25	0	3.1	Juni
Juli	6.5	5.9	6.2	6.2	15.1	9	9	4	0	0	0	3	13	0	0	12	28	5	6	1	10	14	13	4	2.2	Juli
August . . .	8.1	7.2	7.5	7.6	68.8	17	16	14	0	0	0	3	19	0	0	9	15	2	18	6	7	11	24	1	3.0	August
September .	8.1	7.6	8.0	7.9	124.8	22	22	16	0	0	0	0	17	0	0	6	10	9	15	6	21	13	9	1	3.2	September
Oktober . .	7.2	6.9	6.7	6.9	87.7	23	23	14	9	3	0	1	9	0	1	2	5	11	26	4	7	21	17	0	4.5	Oktober
November .	7.4	7.8	7.2	7.5	74.1	20	20	18	12	0	0	1	14	0	0	5	5	16	25	9	9	9	12	0	4.1	November
December .	6.9	7.1	6.5	6.8	74.1	22	21	16	17	0	0	2	11	0	0	2	7	12	38	11	7	7	9	0	3.8	December
Jahr	7.5	7.1	7.0	7.2	718.0	207	192	150	70	3	0	36	192	1	1	82	126	103	240	71	162	140	157	14	3.4	Jahr

Trondhjem.

H = 34 m, H_b = 37.0 m h_t = 1.5 m h_r = 1.0 m

Januar . . .	8.6	8.0	7.1	7.9	157.1	19	18	17	10	3	11	1	19	1	4	0	1	2	0	46	26	15	3	0	3.4	Januar
Februar . .	8.2	7.7	7.5	7.8	72.2	17	16	11	14	1	15	2	16	2	3	6	12	9	6	31	12	8	0	0	3.3	Februar
März	7.2	6.7	8.1	7.3	76.4	22	17	16	15	3	6	0	15	0	1	7	4	6	6	25	20	13	12	0	3.4	März
April	6.7	6.3	6.7	6.6	30.6	13	11	8	4	1	6	5	13	0	1	15	9	8	8	14	8	16	12	0	3.3	April
Mai	6.5	6.8	7.2	6.8	19.6	18	15	6	1	0	3	2	11	0	0	21	12	2	8	19	2	7	22	0	3.5	Mai
Juni	8.6	7.5	7.2	7.8	70.5	23	18	14	0	0	0	1	18	0	1	14	8	2	0	5	6	11	44	0	3.7	Juni
Juli	7.6	7.3	7.7	7.5	53.1	17	13	7	0	0	0	0	13	6	0	18	8	5	2	10	7	8	35	0	3.0	Juli
August . . .	8.3	7.6	7.5	7.8	149.7	24	22	16	0	0	0	2	20	5	0	8	10	3	3	21	13	12	23	0	3.1	August
September .	8.6	7.8	7.8	8.1	109.4	21	18	15	0	0	4	0	19	0	0	7	6	6	6	30	11	10	14	0	3.1	September
Oktober . .	8.6	8.6	8.5	8.6	198.4	25	24	20	12	4	5	0	22	2	5	0	2	14	10	25	10	20	12	0	4.0	Oktober
November .	8.6	8.3	9.0	8.6	98.2	20	20	13	16	3	6	0	23	0	2	2	3	10	12	36	10	12	5	0	3.6	November
December .	8.3	8.2	9.0	8.5	101.1	26	23	19	15	1	13	1	23	0	3	1	5	10	30	28	4	7	8	0	3.2	December
Jahr	8.0	7.6	7.8	7.8	1136.3	245	215	162	87	16	69	14	212	16	20	99	80	77	91	290	129	139	190	0	3.4	Jahr

Carried forward from 1935 Year Book

Stugudalen.

$\lambda = 11^0\ 52'$ E $= 47^m\ 28^s$ $\varphi = 62^0\ 54'$ N

Monat.	Luftdruck. (Normalschwere). Mittel.	Luft-Temperatur. Min.	I	II	III	Mittel.	beobachtetes Max.	Dat.	Min.	Dat.	Absolute Feuchtigkeit. I	II	III	Mittel.	Relat. Feuchtigk. I	II	III	Mittel.	Monat.
Januar		-7.0	-3.8	-2.4	-3.0	-3.2	4.0	16	-14.8	26									Januar
Februar		-8.3	-5.6	-4.1	-4.9	-5.1	3.0	12	-29.5	20									Februar
März		-13.6	-8.7	-5.8	-8.4	-8.2	3.2	18	-30.2	14									März
April		-4.6	-0.1	2.9	0.8	0.0	7.8	10	-12.7	3									April
Mai		0.7	6.4	8.5	6.5	5.3	18.6	18	-6.6	2									Mai
Juni		3.9	8.7	11.1	9.4	8.1	20.6	10	-0.7	5									Juni
Juli		10.0	16.2	19.3	16.0	15.2	29.1	7	4.8	12									Juli
August		8.3	11.2	13.2	11.3	11.0	18.9	8	2.7	17									August
September		3.4	6.5	8.9	6.1	6.4	12.9	17	-2.4	12									September
Oktober		-4.0	-2.1	-0.2	-1.9	-1.7	7.6	1	-19.8	19									Oktober
November		-9.3	-7.0	-5.8	-7.2	-6.9	4.7	19	-29.0	30									November
December		-14.0	-9.3	-9.2	-8.8	-9.2	0.8	4	-34.5	15									December
Jahr		-2.9	1.0	3.0	1.3	1.0	29.1		-34.5										Jahr

Selbu.

$\lambda = 11^0\ 7'$ E $= 44^m\ 28^s$ $\varphi = 63^0\ 13'$ N

Monat.	Luftdruck.	Min.	I	II	III	Mittel.	Max.	Dat.	Min.	Dat.	I	II	III	Mittel.	I	II	III	Mittel.	Monat.
Januar		-3.4	-1.0	0.3	-0.4	-0.5	7.0	14	-14.2	29	3.6	4.0	3.7	3.8	79	79	77	78	Januar
Februar		-4.4	-1.7	0.8	-1.3	-0.9	6.3	12	-16.5	20	3.4	3.4	3.2	3.3	77	68	74	74	Februar
März		-9.0	-5.8	-0.5	-3.6	-3.9	6.8	18	-22.8	13	2.6	3.0	2.8	2.8	79	63	73	75	März
April		-1.0	3.0	8.4	4.8	4.1	14.8	13	-6.6	2	4.0	4.4	3.9	4.0	71	53	61	68	April
Mai		3.6	9.1	13.0	10.5	8.9	23.6	17	-2.4	2	6.0	6.3	5.8	5.9	68	55	60	67	Mai
Juni		6.6	10.6	14.0	12.3	10.8	24.0	10	2.8	18	7.4	7.6	7.4	7.4	77	64	70	78	Juni
Juli		12.1	17.3	21.4	18.5	17.1	29.6	21	7.3	1	11.2	11.2	10.9	11.0	77	60	70	78	Juli
August		10.7	13.3	17.1	14.6	13.8	24.0	27	5.4	17	8.9	9.6	9.1	9.1	79	67	74	78	August
September		6.0	8.6	13.0	9.7	9.6	19.0	17	2.0	12	6.8	7.3	6.7	6.8	81	66	74	76	September
Oktober		-1.3	1.0	3.6	1.6	1.7	10.5	28	-14.8	19	4.1	4.6	4.2	4.3	82	76	79	80	Oktober
November		-6.1	-3.6	-2.0	-3.5	-3.2	7.6	19	-23.8	30	2.9	3.2	3.1	3.1	78	76	79	78	November
December		-9.9	-5.7	-5.3	-6.2	-5.8	3.5	8	-23.2	15	2.7	2.8	2.7	2.7	80	81	81	80	December
Jahr		0.3	3.8	7.0	4.8	4.3	29.6		-23.8		5.3	5.6	5.3	5.4	77	67	73	76	Jahr

Suul.

$\lambda = 12^0\ 1'$ E $= 48^m\ 4^s$ $\varphi = 63^0\ 40'$ N

Monat.	Luftdruck.	Min.	I	II	III	Mittel.	Max.	Dat.	Min.	Dat.	I	II	III	Mittel.	I	II	III	Mittel.	Monat.
Januar		-5.5	-2.5	-0.8	-1.7	-1.8	5.8	18	-14.2	29									Januar
Februar		-7.1	-4.4	-1.8	-3.8	-3.6	6.4	12	-23.6	20									Februar
März		-12.7	-8.6	-2.7	-5.9	-6.4	4.4	18	-28.6	11									März
April		-3.7	1.0	5.7	1.5	1.4	9.7	10	-9.2	2									April
Mai		2.1	8.5	11.8	9.3	7.9	21.2	18	-5.0	5									Mai
Juni		5.6	10.1	13.1	11.2	10.0	23.3	30	-0.1	5									Juni
Juli		10.4	17.3	20.9	18.4	16.6	30.3	21	2.8	25									Juli
August		8.6	13.3	15.4	13.3	12.5	20.3	13	1.9	30									August
September		3.8	7.7	11.0	7.8	7.9	15.3	17	-2.1	12									September
Oktober		-3.8	-1.0	1.1	-0.5	-0.5	8.6	25	-20.0	19									Oktober
November		-8.4	-5.9	-4.3	-5.7	-5.5	4.8	19	-29.8	30									November
December		-13.0	-7.7	-7.0	-7.1	-7.5	4.2	8	-29.8	1									December
Jahr		-2.0	2.3	5.2	3.1	2.6	30.3		-29.8										Jahr

Verdalen.

$\lambda = 11^0\ 31'$ E $= 46^m\ 4^s$ $\varphi = 63^0\ 46'$ N

Monat.	Luftdruck.	Min.	I	II	III	Mittel.	Max.	Dat.	Min.	Dat.	I	II	III	Mittel.	I	II	III	Mittel.	Monat.
Januar		-2.2	0.7	1.3	0.6	0.8	9.3	14	-9.3	30									Januar
Februar		-3.8	-1.9	-0.2	-0.7	-1.1	7.0	14	-10.9	19									Februar
März		-7.6	-4.9	-1.0	-2.8	-3.3	5.6	18	-18.6	13									März
April		-0.3	3.0	7.4	5.3	4.1	10.8	25	-5.1	2									April
Mai		4.7	9.3	12.9	11.0	9.4	21.9	17	-1.8	5									Mai
Juni		7.9	11.1	14.0	12.7	11.4	22.0	30	2.7	5									Juni
Juli		13.3	17.5	21.4	19.6	17.8	28.3	21	7.5	14									Juli
August		10.6	14.5	17.0	15.3	14.2	22.7	7	6.9	30									August
September		5.9	8.8	12.2	9.9	9.6	17.2	18	1.2	12									September
Oktober		-0.8	1.4	3.5	1.8	1.9	10.7	27	-12.5	19									Oktober
November		-4.9	-2.9	-2.0	-2.8	-2.7	7.8	19	-20.0	30									November
December		-9.6	-5.5	-4.6	-4.8	-5.1	5.4	9	-23.8	19									December
Jahr		1.1	4.3	6.8	5.4	4.8	28.3		-23.8										Jahr

1925.

Stugudalen.

H = 613 m h_t = 2.6 m h_r = 1.4 m

Monat.	Bewölkung. I	II	III	Mittel.	Niederschlag. Summe.	Zahl der Tage mit Niederschlag.	≧0.1 mm.	≧1.0 mm.	Schnee. ≧0.1 mm.	Hagel.	Nebel.	Heiter.	Trübe.	Gewitter.	Sturm.	Windverteilung. N	NE	E	SE	S	SW	W	NW	C	Windstärke. Mittel.	Monat.
Januar . . .	8.0	7.4	6.5	7.3	73.1	16	15	11	12	0	0	2	15	0	3	6	3	1	16	35	9	10	8	5	3.4	Januar
Februar . .	8.0	7.4	7.4	7.6	26.8	19	17	6	17	0	0	0	12	0	1	2	1	4	17	36	6	1	5	12	3.9	Februar
März	7.3	6.2	7.2	6.9	41.3	18	16	12	16	0	0	2	14	0	1	3	2	3	7	23	10	14	15	16	3.0	März
April	6.4	5.5	6.1	6.0	13.1	17	15	5	14	0	0	6	10	0	0	0	3	5	23	24	6	4	13	12	2.8	April
Mai	5.5	5.8	6.8	6.0	24.4	12	12	8	7	0	0	3	10	0	1	2	1	2	21	40	4	2	11	10	3.6	Mai
Juni	7.9	8.1	7.7	7.9	83.5	19	18	14	3	0	0	1	16	0	3	20	2	3	0	12	2	6	34	11	3.5	Juni
Juli	5.4	6.7	6.9	6.3	45.8	15	14	11	0	0	0	1	9	0	0	5	0	10	4	30	5	0	19	20	2.7	Juli
August . . .	8.1	7.6	8.0	7.9	111.3	18	17	13	0	0	0	1	18	0	0	10	0	4	11	29	1	3	31	4	3.9	August
September .	7.8	7.7	7.0	7.5	65.6	21	20	14	0	0	0	0	14	0	1	7	2	16	11	18	4	7	12	13	2.6	September
Oktober . .	8.1	8.5	7.7	8.1	77.3	19	17	14	13	0	0	2	21	0	1	9	4	5	17	18	8	5	19	8	3.8	Oktober
November .	8.0	7.5	7.8	7.8	47.7	17	17	10	17	0	0	2	19	0	1	8	0	8	7	26	2	2	23	14	3.2	November
December .	7.6	7.7	7.4	7.6	58.9	17	15	12	15	0	0	3	18	0	1	2	1	5	7	41	5	8	6	18	2.9	December
Jahr	7.3	7.2	7.2	7.2	668.8	208	193	130	114	0	0	23	176	0	13	74	19	66	141	332	62	62	196	143	3.3	Jahr

Selbu.

H = ca. 220 m h_t = 1.8 m h_r = 1.0 m

Januar . . .	7.0	7.5	6.2	6.9	93.7	20	16	13	12	0	0	3	11	0	0	4	6	3	46	2	0	1	18	13	2.2	Januar
Februar . .	7.1	6.6	6.1	6.6	50.9	17	16	11	14	0	0	2	8	1	0	3	2	6	46	6	2	0	12	7	2.9	Februar
März	6.1	6.5	5.9	6.2	63.3	22	16	12	15	0	0	5	10	0	0	4	4	16	35	2	0	1	27	4	2.3	März
April	5.2	5.5	4.8	5.2	15.2	10	9	6	5	0	0	6	4	0	0	6	3	8	41	3	0	2	22	5	2.4	April
Mai	5.1	6.1	6.2	5.8	26.5	17	11	8	1	0	0	5	8	2	0	7	1	5	45	6	2	3	21	3	2.9	Mai
Juni	7.5	7.3	6.8	7.2	88.5	21	20	14	0	0	1	1	15	1	0	30	1	3	6	3	3	8	30	6	2.5	Juni
Juli	5.5	6.4	6.8	6.2	103.5	20	18	13	0	0	1	1	9	8	0	19	3	4	22	3	0	2	25	15	2.2	Juli
August . . .	7.3	6.7	7.2	7.1	202.2	23	19	16	0	0	0	3	14	1	0	10	0	4	22	12	0	6	25	14	2.4	August
September .	7.5	6.7	6.6	6.9	72.6	22	18	13	0	0	0	0	10	0	0	3	3	6	42	3	1	2	22	8	2.2	September
Oktober . .	7.7	8.0	7.0	7.6	121.4	24	19	14	12	0	0	2	16	0	2	4	2	4	39	5	1	2	29	7	2.7	Oktober
November .	6.8	7.2	7.4	7.1	67.1	20	15	10	13	0	0	2	13	0	0	4	1	12	47	3	0	5	11	7	2.0	November
December .	7.2	7.4	7.1	7.2	71.7	22	19	15	18	0	0	2	14	0	0	4	1	6	43	3	0	2	19	15	2.2	December
Jahr	6.7	6.8	6.5	6.7	976.6	238	196	145	90	0	2	32	132	13	2	98	27	77	434	51	9	34	261	104	2.4	Jahr

Suul.

H = 255 m h_t = 1.3 m h_r = 0.9 m

Januar . . .	7.4	7.6	7.6	7.5	178.1	20	20	17	16	0	1	1	17	0	0	0	0	1	6	5	13	14	2	52	0.9	Januar
Februar . .	6.8	6.7	6.9	6.8	59.6	18	18	11	18	1	0	2	12	0	0	0	0	12	17	4	6	11	2	32	1.4	Februar
März	5.9	6.2	6.6	6.2	81.6	19	17	13	17	1	1	3	11	0	0	0	0	12	11	2	10	21	1	36	1.0	März
April	4.8	5.4	5.7	5.3	25.3	12	12	8	11	2	0	6	6	0	0	0	2	3	18	6	4	13	9	35	1.2	April
Mai	5.2	5.5	6.6	5.8	48.0	16	13	10	4	1	0	3	6	1	0	2	2	14	25	9	4	8	8	21	1.6	Mai
Juni	8.1	7.2	7.1	7.5	144.5	19	17	16	0	0	2	1	17	0	0	2	2	4	7	1	3	27	31	13	1.8	Juni
Juli	5.3	5.5	6.1	5.6	95.3	20	19	15	0	0	1	2	6	9	0	2	1	13	13	4	3	23	3	31	1.2	Juli
August . . .	6.6	6.9	6.7	6.7	162.6	22	21	16	0	0	2	4	12	4	0	1	0	8	16	6	3	21	10	28	1.2	August
September .	6.9	6.6	7.1	6.9	72.7	17	17	16	0	0	4	0	8	0	0	0	0	13	24	2	4	14	8	25	1.3	September
Oktober . .	7.7	7.3	7.0	7.3	159.1	19	18	17	11	0	1	2	14	0	0	0	0	4	12	3	3	30	6	35	1.2	Oktober
November .	6.4	6.6	6.2	6.4	87.9	17	15	12	13	0	2	3	12	0	0	0	0	8	11	0	5	17	0	49	0.8	November
December .	6.3	7.7	6.2	6.7	90.0	20	20	15	18	0	1	2	14	0	0	0	0	18	15	2	6	10	0	42	1.0	December
Jahr	6.4	6.6	6.6	6.6	1204.7	219	207	166	108	5	15	29	135	14	0	7	7	110	175	44	64	209	80	399	1.2	Jahr

Verdalen.

H = ca. 60 m h_t = 1.4 m

Januar . . .	7.6	7.6	6.9	7.4		21				2	0	3	15	0	1	0	14	25	7	9	26	10	2	0	2.9	Januar
Februar . .	8.4	7.2	6.9	7.5		17				0	1	2	13	0	0	1	7	34	7	14	16	4	1	0	3.5	Februar
März	6.5	6.5	7.4	6.8		20				0	0	1	14	0	0	2	8	31	3	8	27	9	2	3	2.6	März
April	5.0	5.6	5.7	5.4		11				0	0	7	8	0	0	2	9	17	7	11	18	16	8	2	2.3	April
Mai	5.4	6.3	6.4	6.0		16				0	0	1	8	1	0	2	12	18	16	11	10	12	11	1	2.5	Mai
Juni	8.3	7.3	7.0	7.5		18				0	1	1	18	0	0	2	5	9	2	4	15	26	25	2	2.6	Juni
Juli	6.4	5.3	6.4	6.0		11				0	0	2	10	7	0	5	3	16	4	5	15	24	20	1	1.8	Juli
August . . .	7.5	6.8	7.5	7.3		14				0	0	4	15	4	0	4	3	11	14	13	19	16	9	4	2.4	August
September .	7.7	7.3	7.3	7.4		18				0	2	1	14	0	0	1	6	28	7	9	17	12	5	5	2.2	September
Oktober . .	7.6	7.1	6.5	7.1		23				0	1	2	13	0	0	0	11	22	5	8	26	14	5	2	3.0	Oktober
November .	7.6	7.5	7.6	7.6		19				0	3	2	17	0	0	2	8	40	4	4	22	9	1	0	2.7	November
December .	7.6	7.8	7.2	7.5		22				1	1	1	16	0	0	4	31	23	8	4	12	6	3	2	2.4	December
Jahr	7.1	6.9	6.9	7.0		210				3	9	27	161	12	1	25	117	274	84	100	223	158	92	22	2.6	Jahr

Stenkjær.

$\lambda = 11^0\ 30'$ E $= 46^m\ 0^s$ $\varphi = 64^0\ 1'$ N $C_g = 1.65$ mb bei 1019 mb

Monat.	Luftdruck. (Normalschwere.) Mittel.	Luft-Temperatur. Min.	I	II	III	Mittel.	beobachtetes Max.	Dat.	Min.	Dat.	Absolute Feuchtigkeit. I	II	III	Mittel.	Relat. Feuchtigk. I	II	III	Mittel.	Monat.
Januar	1004.7	-1.3	2.5	2.5	1.8	2.2	9.0	12	-7.7	24	4.5	4.6	4.6	4.6	81	83	86	84	Januar
Februar. . . .	997.3	-3.6	-1.0	0.7	-0.1	-0.3	8.0	11	-12.0	19	3.9	4.0	3.9	3.9	84	80	79	81	Februar
März	1009.0	-8.5	-4.3	-0.8	-2.0	-2.9	6.2	24	-21.9	10	2.9	3.5	3.4	3.3	80	76	81	80	März
April	07.1	0.2	4.0	7.7	6.4	4.8	11.9	22	-4.0	2	5.0	5.2	5.0	5.0	80	65	67	75	April
Mai	10.8	5.7	10.4	13.2	11.8	10.2	22.3	17	-0.9	5	6.7	6.7	6.4	6.5	72	60	62	69	Mai
Juni.	11.3	8.7	11.5	14.3	13.6	12.0	23.1	30	3.7	5	8.0	8.4	8.2	8.1	80	70	71	78	Juni
Juli	11.3	13.7	18.3	21.1	21.0	18.4	28.0	4	7.6	25	11.7	11.8	11.6	11.6	76	65	64	72	Juli
August	06.3	12.1	15.1	18.0	15.7	15.2	23.0	23	8.6	30	10.3	10.8	10.2	10.3	82	71	78	81	August
September . .	03.3	7.6	10.2	13.0	10.7	10.7	16.9	17	4.7	27	7.8	8.1	7.7	7.8	85	73	80	81	September
Oktober . . .	04.1	-1.4	1.1	3.4	1.6	1.7	10.0	25	-14.2	18	4.2	4.5	4.2	4.3	84	75	80	81	Oktober
November . .	09.0	-5.3	-3.1	-2.1	-2.9	-2.8	8.0	19	-21.2	30	3.2	3.2	3.0	3.1	80	76	74	77	November
December . .	997.2	-10.2	-6.4	-5.1	-4.9	-5.6	3.9	6	-24.3	19	2.6	2.7	2.7	2.7	81	80	78	80	December
Jahr.	1006.0	1.5	4.9	7.2	6.1	5.3	28.0		-24.3		5.9	6.1	5.9	5.9	80	73	75	78	Jahr

Snaasa.

$\lambda = 12^0\ 33'$ E $= 50^m\ 12^s$ $\varphi = 64^0\ 16'$ N

Januar		-2.9	-0.2	0.2	0.3	0.0	6.6	14	-8.6	29									Januar
Februar. . . .		-5.1	-3.2	-1.0	-2.5	-2.4	5.2	14	-18.0	20									Februar
März		-10.2	-6.4	-2.1	-5.4	-5.2	4.6	30	-23.6	10									März
April		-1.6	2.8	6.7	4.0	3.3	12.0	7	-7.6	2									April
Mai		3.4	8.4	12.4	10.6	8.7	20.2	17	-3.5	5									Mai
Juni.		6.8	11.1	14.0	12.3	11.0	24.8	6	-0.1	5									Juni
Juli		12.5	18.5	22.2	20.0	18.2	29.4	21	3.8	25									Juli
August		10.4	14.3	16.9	15.0	14.0	22.9	8	3.4	30									August
September . .		5.6	8.8	11.9	8.6	9.0	16.8	17	1.8	12									September
Oktober . . .		-2.1	1.0	2.8	0.7	1.2	8.8	28	-16.0	19									Oktober
November . .		-6.5	-3.8	-2.3	-3.5	-3.4	6.4	19	-25.6	30									November
December . .		-10.9	-6.4	-5.6	-5.2	-5.8	4.5	8	-28.8	19									December
Jahr.		0.0	3.7	6.3	4.6	4.0	29.4		-28.8										Jahr

Nordli.

$\lambda = 13^0\ 35'$ E $= 54^m\ 20^s$ $\varphi = 64^0\ 28'$ N

Januar		-5.9	-3.0	-1.8	-2.4	-2.5	3.6	14	-16.7	24	3.6	3.8	3.6	3.7	89	88	88	88	Januar
Februar. . . .		-11.4	-7.5	-4.5	-6.7	-6.5	2.2	14	-28.0	20	2.3	3.0	2.4	2.6	77	82	76	77	Februar
März		-18.1	-11.3	-4.7	-8.8	-9.3	3.9	18	-35.1	15	1.6	2.8	2.0	2.1	70	79	75	73	März
April		-5.8	1.4	4.7	1.0	0.8	10.8	8	-14.0	9	4.6	5.8	4.6	4.9	89	89	90	89	April
Mai		-0.2	5.5	9.3	7.1	5.4	16.6	17	-7.2	6	5.0	5.2	5.2	5.0	72	59	68	74	Mai
Juni.		4.2	8.4	11.9	10.4	8.6	22.0	30	-2.4	5	6.5	6.7	6.4	6.4	79	65	69	78	Juni
Juli		10.7	15.6	20.5	17.8	16.1	26.6	21	1.2	14	9.9	10.0	10.0	9.9	76	56	66	77	Juli
August		7.7	12.3	15.0	13.1	11.9	20.8	8	4.0	27	8.7	8.9	8.9	8.7	83	70	79	83	August
September . .		3.1	6.6	9.8	6.8	6.9	13.6	17	-0.4	17	6.2	6.4	6.4	6.2	85	70	86	84	September
Oktober . . .		-4.7	-1.8	0.6	-1.9	-1.3	6.4	1	-17.5	18	3.6	4.2	3.5	3.8	84	81	82	83	Oktober
November . .		-10.6	-6.9	-5.4	-6.8	-6.6	4.9	19	-22.9	30	2.1	2.2	2.2	2.2	72	73	73	72	November
December . .		-16.6	-12.4	-11.2	-10.6	-11.5	2.0	6	-33.6	20	1.8	1.5	1.6	1.6	63	66	68	66	December
Jahr.		-4.0	0.6	3.7	1.6	1.0	26.6		-35.1		4.7	5.0	4.7	4.8	78	73	77	79	Jahr

Nordøerne.

$\lambda = 10^0\ 33'$ E $= 42^m\ 12^s$ $\varphi = 64^0\ 48'$ N

Januar		2.6	4.5	4.6	4.5	4.5	8.2	18	-3.2	29									Januar
Februar. . . .		-0.8	1.0	1.4	1.3	1.1	6.0	3	-5.3	28									Februar
März		-2.6	-0.6	0.5	-0.3	-0.3	6.0	18	-8.7	15									März
April		2.7	4.9	6.4	5.0	4.9	10.4	10	-1.2	1									April
Mai		6.1	8.2	9.7	8.6	8.2	16.8	17	1.7	1									Mai
Juni.		8.1	10.0	11.3	10.1	9.9	15.5	10	6.6	14									Juni
Juli		13.9	16.2	17.8	16.5	16.1	23.7	26	9.8	2									Juli
August		12.7	14.3	15.4	14.5	14.2	18.5	25	9.8	31									August
September . .		9.5	11.1	12.1	11.2	11.2	15.4	9	7.2	27									September
Oktober . . .	999.4	2.9	4.3	4.9	4.5	4.5	9.8	1	-1.4	18									Oktober
November . .	03.9	-0.3	1.1	1.4	1.2	1.2	8.0	19	-8.9	30									November
December . .	992.7	-3.0	-0.9	-0.9	-0.7	-0.8	6.1	8	-8.9	15									December
Jahr.		4.3	6.2	7.0	6.4	6.2	23.7		-8.9										Jahr

1925.

Stenkjær.

H = 4 m, H_b = 9.8 m h_t = 5.0 m

Monat.	Bewölkung. I	II	III	Mittel.	Niederschlag. Summe.	Zahl der Tage mit Niederschlag.	≥ 0.1 mm.	≥ 1.0 mm.	Schnee. ≥ 0.1 mm.	Hagel.	Nebel.	Heiter.	Trübe.	Gewitter.	Sturm.	Windverteilung. N	NE	E	SE	S	SW	W	NW	C	Windstärke Mittel.	Monat.
Januar . . .	7.7	7.9	7.6	7.7		16				0	0	4	21	0	0	0	2	6	1	6	32	4	4	38	1.4	Januar
Februar . .	8.5	7.9	6.9	7.8		16				0	0	1	16	0	0	0	8	9	15	1	30	1	0	20	1.2	Februar
März	6.5	5.4	6.3	6.1		18				0	0	6	13	0	0	1	4	13	4	0	13	6	12	40	0.9	März
April	4.6	5.8	6.1	5.5		10				0	0	7	10	0	0	0	2	12	12	3	10	9	2	40	0.7	April
Mai	4.9	6.1	6.0	5.7		10				0	0	6	9	0	0	0	1	6	12	1	8	8	7	50	0.7	Mai
Juni	8.6	7.1	7.0	7.6		15				0	0	1	16	0	0	2	3	1	1	2	7	18	24	32	0.8	Juni
Juli	5.0	4.8	5.7	5.2		11				0	0	7	10	0	0	0	8	2	5	3	3	22	7	43	0.6	Juli
August . . .	7.1	6.7	6.7	6.8		15				0	0	5	16	0	0	1	0	11	12	6	15	8	7	33	0.8	August
September .	7.9	7.2	6.6	7.2		18				0	2	2	12	0	0	3	1	11	7	2	6	18	5	37	0.8	September
Oktober . .	7.9	6.8	5.7	6.8		21				1	2	0	12	0	0	4	14	17	8	1	6	15	10	18	2.2	Oktober
November .	7.6	7.3	7.4	7.4		19				0	1	1	17	0	1	2	7	25	3	2	15	9	2	25	1.7	November
December .	7.5	7.8	7.6	7.6		26				2	1	3	17	0	1	2	16	37	4	3	4	5	1	21	1.4	December
Jahr	7.0	6.7	6.6	6.8		195				3	6	43	169	0	2	15	66	150	84	30	149	123	81	397	1.1	Jahr

Snaasa.

H = 142 m h_t = 1.7 m h_r = 1.4 m

Monat.	I	II	III	Mittel.	Niederschlag. Summe.	Niederschlag.	≥ 0.1 mm.	≥ 1.0 mm.	Schnee. ≥ 0.1 mm.	Hagel.	Nebel.	Heiter.	Trübe.	Gewitter.	Sturm.	N	NE	E	SE	S	SW	W	NW	C	Windstärke Mittel.	Monat.
Januar . . .	7.9	7.5	7.3	7.6	146.4	24	22	18	16	0	0	1	17	0	0	0	0	10	16	0	2	17	0	48	0.8	Januar
Februar . .	7.5	7.6	7.2	7.4	69.0	17	16	11	14	0	0	0	13	0	0	0	0	0	27	3	11	3	1	39	0.9	Februar
März	6.5	6.9	6.5	6.6	97.7	21	20	14	19	0	0	1	15	0	0	0	1	10	13	0	8	7	2	52	0.6	März
April	5.9	6.3	6.7	6.3	30.7	13	13	7	8	0	0	4	11	0	0	0	0	0	25	6	10	2	0	47	0.7	April
Mai	5.9	5.4	5.8	5.7	33.5	14	11	7	1	0	0	5	8	0	0	0	0	0	46	1	7	3	6	30	1.1	Mai
Juni	8.1	7.5	7.6	7.7	111.1	21	19	15	0	0	0	0	17	0	0	0	0	0	16	3	15	15	14	27	0.9	Juni
Juli	5.9	6.3	6.6	6.3	86.2	16	15	14	0	0	0	2	10	3	0	0	0	2	39	6	10	4	0	32	0.9	Juli
August . . .	7.9	7.3	7.6	7.6	125.7	23	17	15	0	0	0	2	17	0	0	0	0	0	31	2	7	10	0	43	1.0	August
September .	7.8	7.4	7.6	7.6	64.1	22	21	15	0	0	0	0	16	0	0	0	0	1	25	2	12	0	2	48	0.7	September
Oktober . .	7.8	6.9	6.5	7.1	165.1	22	22	19	13	0	0	1	12	0	0	0	0	9	20	2	5	18	4	35	1.2	Oktober
November .	7.7	7.2	7.0	7.3	94.3	17	17	13	15	0	1	3	18	0	0	2	1	3	22	1	2	14	1	44	0.9	November
December .	6.9	7.7	7.7	7.4	56.6	18	18	14	17	0	0	4	18	0	0	0	1	4	34	5	2	3	0	44	0.8	December
Jahr	7.2	7.0	7.0	7.0	1080.4	228	211	162	103	0	1	23	172	3	0	2	3	39	314	31	91	96	30	489	0.9	Jahr

Nordli.

H = 395 m h_t = 1.7 m h_r = 1.5 m

Monat.	I	II	III	Mittel.	Niederschlag. Summe.	Niederschlag.	≥ 0.1 mm.	≥ 1.0 mm.	Schnee. ≥ 0.1 mm.	Hagel.	Nebel.	Heiter.	Trübe.	Gewitter.	Sturm.	N	NE	E	SE	S	SW	W	NW	C	Windstärke Mittel.	Monat.
Januar . . .	8.9	8.9	8.2	8.7	130.7	24	23	19	22	0	0	2	24	0	0	0	2	17	3	1	9	38	2	21	3.2	Januar
Februar . .	8.5	8.2	6.5	7.7	78.6	22	21	16	22	0	0	0	15	0	0	0	4	34	3	1	8	15	2	17	2.8	Februar
März	6.5	6.4	5.8	6.2	56.0	21	20	12	20	0	0	7	11	0	0	1	4	17	8	1	5	21	7	29	2.5	März
April	5.6	6.1	6.7	6.1	25.0	11	11	6	10	0	0	4	9	0	0	0	2	20	8	6	9	32	3	10	2.9	April
Mai	5.6	6.0	5.6	5.7	26.9	15	15	9	4	0	0	8	8	0	0	2	6	21	6	5	14	17	7	15	2.9	Mai
Juni	8.1	8.1	6.8	7.7	77.5	21	20	15	0	0	0	3	17	0	0	0	1	8	4	2	13	48	2	12	3.8	Juni
Juli	5.7	6.8	7.3	6.6	85.6	13	13	10	0	0	0	4	12	4	0	0	2	27	18	5	2	24	3	12	3.4	Juli
August . . .	7.6	7.3	7.3	7.4	138.7	24	24	20	0	0	0	3	18	3	0	0	4	28	14	3	11	22	4	7	3.4	August
September .	8.3	8.1	7.8	8.1	68.5	21	21	18	0	0	2	0	19	0	0	0	2	23	15	4	8	27	1	10	3.4	September
Oktober . .	8.4	6.6	7.3	7.4	140.5	24	24	16	16	0	4	1	17	0	0	1	3	21	13	1	3	31	6	14	3.2	Oktober
November .	8.1	8.0	7.4	7.8	70.5	18	18	11	17	0	2	2	17	0	0	0	3	26	1	0	0	22	5	33	2.1	November
December .	6.9	7.6	6.5	7.0	44.8	21	21	12	21	0	1	4	13	0	0	0	1	28	3	0	1	13	1	46	1.7	December
Jahr	7.4	7.3	6.9	7.2	943.3	235	231	164	132	0	9	38	180	7	0	4	34	270	96	29	83	310	43	226	2.9	Jahr

Nordøerne.

H = 31 m h_t = 2.0 m h_r = 0.7 m

Monat.	I	II	III	Mittel.	Niederschlag. Summe.	Niederschlag.	≥ 0.1 mm.	≥ 1.0 mm.	Schnee. ≥ 0.1 mm.	Hagel.	Nebel.	Heiter.	Trübe.	Gewitter.	Sturm.	N	NE	E	SE	S	SW	W	NW	C	Windstärke Mittel.	Monat.
Januar . . .	8.6	8.0	7.8	8.1	96.6	20	19	18	11	5	0	0	19	0	2	7	2	0	14	15	16	25	13	1	4.5	Januar
Februar . .	7.0	6.9	6.2	6.7	59.8	20	19	12	16	4	0	2	10	0	0	6	2	17	26	9	13	8	3	0	4.3	Februar
März	6.5	6.4	6.3	6.4	63.7	18	17	14	16	0	0	3	8	0	0	11	3	13	21	8	15	10	9	3	3.6	März
April	5.4	4.9	5.6	5.3	27.7	12	12	10	4	1	0	4	7	0	1	6	7	9	21	10	11	14	6	6	2.8	April
Mai	5.5	5.1	5.3	5.3	24.5	12	12	10	1	1	1	3	8	0	0	16	27	10	20	1	9	4	2	4	2.6	Mai
Juni	8.1	6.9	7.3	7.4	51.1	17	17	13	0	1	5	1	16	0	0	26	13	3	4	2	17	13	9	3	2.7	Juni
Juli	5.1	4.8	4.7	4.9	57.7	13	13	6	0	0	3	5	4	1	0	9	24	13	4	1	14	12	10	6	2.1	Juli
August . . .	7.2	5.6	6.4	6.4	68.0	15	15	12	0	0	3	3	12	1	0	22	13	7	22	3	13	7	5	1	2.7	August
September .	6.6	6.7	6.8	6.7	108.1	20	19	15	0	0	0	3	15	0	0	4	8	14	18	7	15	19	5	0	3.7	September
Oktober . .	6.7	7.1	6.1	6.6	64.0	22	19	11	10	3	0	1	10	0	0	16	2	7	27	10	6	12	12	1	4.5	Oktober
November .	7.4	7.6	7.9	7.6	36.0	20	18	10	13	2	0	1	16	0	1	14	2	8	24	13	8	14	6	1	4.5	November
December .	7.5	8.3	7.1	7.6	62.8	22	21	15	16	0	0	1	15	0	1	9	4	10	39	12	6	5	7	1	3.8	December
Jahr	6.8	6.5	6.5	6.6	720.0	211	201	146	87	17	12	27	140	2	5	146	107	111	240	91	143	143	87	27	3.5	Jahr

Rosvikvaagen.

$\lambda = 11^0\ 48'\ E = 47^m\ 12^s$ $\varphi = 65^0\ 4'\ N$

Monat.	Luftdruck. (Normalschwere). Mittel.	Luft-Temperatur. Min.	I	II	III	Mittel.	beobachtetes Max.	Dat.	Min.	Dat.	Absolute Feuchtigkeit. I	II	III	Mittel.	Relat. Feuchtigk. I	II	III	Mittel.	Monat.
Januar		1.2	3.5	3.7	3.4	3.5	10.2	14	-5.0	29	4.8	4.7	4.8	4.8	80	77	80	80	Januar
Februar		-2.4	-0.6	0.7	0.3	0.0	5.8	12	-10.6	21	3.4	3.5	3.3	3.4	73	71	68	71	Februar
März		-4.7	2.5	-0.9	-1.7	-2.0	5.4	18	-10.7	16	2.9	3.2	3.1	3.1	70	70	73	72	März
April		1.4	4.2	6.5	5.2	4.6	12.1	7	-2.7	5	4.3	4.6	4.6	4.4	69	63	68	70	April
Mai		5.4	8.6	10.0	9.6	8.4	20.0	17	0.4	1	5.9	6.0	6.0	5.9	69	65	66	68	Mai
Juni		7.4	10.3	11.4	10.6	10.0	17.1	6	4.4	5	7.7	8.0	7.7	7.7	82	80	81	82	Juni
Juli		13.1	17.2	18.2	17.3	16.5	27.7	26	7.3	14	10.6	11.1	10.9	10.8	73	72	75	75	Juli
August		12.4	14.5	16.1	14.7	14.4	21.3	24	8.1	15	9.6	10.2	9.7	9.7	79	76	78	79	August
September		8.2	9.9	11.9	10.7	10.4	16.1	9	6.1	28	7.3	8.0	8.0	7.7	81	77	79	80	September
Oktober		1.1	3.2	4.2	3.4	3.4	10.2	25	-7.4	15	4.6	4.9	4.6	4.7	79	77	77	78	Oktober
November		-2.6	-0.4	-0.1	-0.1	-0.3	7.1	19	-11.5	30	3.5	3.4	3.5	3.5	75	72	74	74	November
December		-4.8	-1.8	-1.9	-1.7	-1.9	9.0	8	-13.2	19	3.1	3.0	3.0	3.0	72	70	71	71	December
Jahr		3.0	6.3	6.6	6.0	5.6	27.7		-13.2		5.6	5.9	5.8	5.7	75	72	74	75	Jahr

Brønnø.

$\lambda = 12^0\ 13'\ E = 48^m\ 52^s$ $\varphi = 65^0\ 28'\ N$ $C_g = 1.75$ mb bei 1000 mb

Monat.	Luftdruck. (Normalschwere). Mittel.	Min.	I	II	III	Mittel.	Max.	Dat.	Min.	Dat.	I	II	III	Mittel.	I	II	III	Mittel.	Monat.
Januar	1002.0	1.0	3.5	4.0	3.6	3.7	8.0	14	-4.3	29	4.7	4.8	4.8	4.8	79	78	81	80	Januar
Februar	996.6	-2.3	-0.5	0.9	0.3	0.1	5.8	12	-7.8	28	3.4	3.6	3.6	3.5	72	73	75	73	Februar
März	1007.7	-4.9	-2.5	-0.7	-1.5	-1.9	5.2	18	-12.0	15	3.1	3.3	3.3	3.2	74	72	74	74	März
April	06.7	1.9	4.5	6.3	6.0	4.9	12.0	8	-3.0	2	4.7	4.9	4.8	4.7	75	69	69	73	April
Mai	11.7	5.6	8.4	10.1	9.8	8.5	18.8	17	0.1	1	5.6	5.8	5.7	5.6	67	63	64	67	Mai
Juni	11.3	8.1	10.1	11.6	10.9	10.2	17.0	10	5.4	5	7.3	7.6	7.8	7.5	80	75	80	82	Juni
Juli	12.3	13.6	16.4	18.9	17.7	16.7	26.6	4	7.9	14	10.3	10.6	11.1	10.6	75	67	75	78	Juli
August	06.8	12.5	14.5	16.2	15.4	14.7	21.0	24	9.2	15	9.6	9.5	9.7	9.5	79	71	76	78	August
September	03.0	8.4	10.5	12.3	11.2	10.8	16.8	17	2.8	30	7.4	7.2	7.4	7.2	79	69	76	76	September
Oktober	02.3	1.3	3.4	4.6	3.6	3.7	10.7	25	-4.9	16	4.5	4.6	4.4	4.5	74	71	72	73	Oktober
November	07.3	-2.5	-0.6	0.3	-0.5	-0.4	7.6	19	-10.5	30	3.7	3.8	3.8	3.8	77	75	80	78	November
December	995.9	-4.4	-1.8	-1.8	-1.8	-1.8	6.4	9	-12.4	19	3.1	3.1	3.0	3.1	70	73	71	71	December
Jahr	1005.3	3.2	5.5	6.9	6.2	5.8	26.6		-12.4		5.6	5.7	5.8	5.7	75	71	74	75	Jahr

Hatfjelddalen.

$\lambda = 14^0\ 0'\ E = 56^m\ 0^s$ $\varphi = 65^0\ 36'\ N$

Monat.	Luftdruck. (Normalschwere). Mittel.	Min.	I	II	III	Mittel.	Max.	Dat.	Min.	Dat.	I	II	III	Mittel.	I	II	III	Mittel.	Monat.
Januar		-4.9	-1.3	-0.4	-1.4	-1.0	5.4	18	-14.5	1	3.8	4.0	3.8	3.9	87	85	87	87	Januar
Februar		-13.4	-9.1	-4.5	-6.9	-7.1	1.7	15	-31.0	22	2.3	2.8	2.7	2.6	86	79	86	85	Februar
März		-18.8	-13.0	-3.5	-7.9	-9.2	3.5	18	-33.8	11	1.8	2.4	2.2	2.1	83	62	77	78	März
April		-3.0	1.0	5.6	2.6	1.9	11.7	8	-12.5	2	3.7	3.5	3.8	3.6	74	51	67	73	April
Mai		-0.1	6.2	9.2	7.5	5.8	18.0	18	-7.6	6	4.9	5.0	4.5	4.7	67	57	58	64	Mai
Juni		5.1	10.0	12.5	11.3	9.7	21.8	30	-1.9	5	6.7	6.7	6.4	6.5	72	62	64	72	Juni
Juli		9.3	16.2	20.2	18.7	16.1	27.6	22	2.0	25	10.1	9.9	9.6	9.8	74	57	60	71	Juli
August		8.2	13.1	17.1	14.1	13.1	21.9	24	1.7	28	9.0	8.8	9.2	8.9	81	62	77	82	August
September		3.5	6.8	11.1	7.1	7.5	15.6	17	-2.9	17	6.6	6.4	6.7	6.5	88	64	87	85	September
Oktober		-6.8	-3.9	0.6	-2.7	-2.4	10.0	9	-23.7	18	3.2	3.9	3.5	3.5	87	79	89	86	Oktober
November		-13.5	-9.8	-7.7	-9.0	-9.0	5.2	19	-30.7	30	2.2	2.5	2.3	2.3	87	84	86	86	November
December		-18.4	-12.6	-12.4	-12.5	-12.6	2.1	6	-38.2	19	1.8	1.9	1.9	1.9	82	80	84	83	December
Jahr		-4.4	0.3	4.0	1.7	1.1	27.6		-38.2		4.7	4.8	4.7	4.7	81	68	77	79	Jahr

Skaalvær.

$\lambda = 12^0\ 11'\ E = 48^m\ 44^s$ $\varphi = 65^0\ 52'\ N$

Monat.	Luftdruck. (Normalschwere). Mittel.	Min.	I	II	III	Mittel.	Max.	Dat.	Min.	Dat.	I	II	III	Mittel.	I	II	III	Mittel.	Monat.
Januar		2.0	4.1	4.5	4.0	4.2	8.5	14	-0.8	8									Januar
Februar		-0.9	0.5	1.1	0.8	0.7	6.0	12	-5.1	22									Februar
März		-3.6	-1.8	-1.0	-1.2	-1.5	5.2	18	-9.5	8									März
April		2.5	4.5	6.2	5.1	4.8	9.8	7	-2.0	2									April
Mai		5.3	7.6	8.9	8.4	7.6	16.0	29	0.6	1									Mai
Juni		8.0	10.1	11.0	10.3	9.9	15.0	21	6.2	1									Juni
Juli		13.2	16.1	18.0	16.3	16.0	24.5	5	9.6	10									Juli
August		12.3	14.1	15.4	14.4	14.0	20.4	24	9.2	15									August
September		8.9	10.7	12.2	11.2	11.0	15.5	17	6.7	2									September
Oktober		2.4	4.0	4.7	4.3	4.2	10.0	25	-2.4	16									Oktober
November		-0.8	0.6	0.9	0.7	0.7	8.4	19	-8.3	30									November
December		-3.3	-1.3	-1.2	-1.3	-1.3	6.0	8	-9.4	18									December
Jahr		3.8	5.8	6.7	6.1	5.9	24.5		-9.5										Jahr

1925.

Rosvikvaagen.

H = 15 m h_t = 1.5 m h_r = 1.5 m

Monat.	Bewölkung. I	II	III	Mittel.	Niederschlag. Summe.	Zahl der Tage mit Niederschlag.	≥ 0.1 mm.	≥ 1.0 mm.	Schnee. ≥ 0.1 mm.	Hagel.	Nebel.	Heiter.	Trübe.	Gewitter.	Sturm.	Windverteilung. N	NE	E	SE	S	SW	W	NW	C	Windstärke. Mittel.	Monat.
Januar . . .	8.2	7.9	7.0	7.7	132.1	26	25	20	11	6	0	1	20	2	2	0	1	5	13	24	28	8	3	11	3.5	Januar
Februar . .	7.7	7.4	6.0	7.0	76.6	19	19	16	16	4	0	3	13	0	3	1	4	17	23	23	9	2	1	4	3.9	Februar
März	6.5	7.0	6.8	6.8	101.9	22	19	12	17	7	0	2	13	0	1	4	14	9	19	20	9	8	5	5	2.9	März
April	6.8	6.6	6.5	6.6	54.3	19	15	10	7	3	0	4	13	0	1	11	5	3	15	14	17	5	3	17	2.4	April
Mai	6.4	5.6	5.0	5.7	29.0	17	12	9	0	1	2	8	10	1	0	26	14	3	14	11	14	1	3	7	2.4	Mai
Juni	8.4	7.7	7.6	7.9	127.5	21	18	18	0	0	6	1	19	0	0	32	4	1	0	6	22	7	10	8	1.9	Juni
Juli	5.7	5.8	5.6	5.7	106.5	20	15	13	0	1	1	3	9	5	0	24	18	2	3	6	17	7	1	15	1.5	Juli
August . . .	7.7	7.1	6.6	7.1	94.6	20	16	13	0	0	0	3	15	2	0	26	5	6	13	17	15	5	4	2	2.0	August
September .	6.8	7.3	7.2	7.1	159.4	22	22	22	0	1	0	2	12	1	0	6	10	8	18	17	16	6	4	5	2.8	September
Oktober . .	6.5	6.3	5.3	6.0	242.3	21	20	18	9	6	0	4	10	1	5	4	11	16	19	9	8	12	12	2	3.7	Oktober
November .	6.9	7.4	6.8	7.0	97.9	19	18	16	11	5	0	2	15	0	0	6	15	12	17	15	12	6	5	2	3.2	November
December .	7.4	8.0	6.6	7.3	59.6	22	17	9	13	1	0	2	13	0	1	2	14	11	32	19	3	4	1	7	3.0	December
Jahr	7.1	7.0	6.4	6.8	1281.7	248	216	176	84	35	9	35	162	12	13	142	115	93	186	181	170	71	52	85	2.8	Jahr

Brønnø.

H = 11 m, H_b = 16.4 m h_t = 1.8 m h_r = 2.0 m

Januar . . .	8.6	9.0	8.5	8.7	137.1	24	24	22	9	4	0	1	24	0	3	4	0	11	14	9	30	14	6	5	3.6	Januar
Februar . .	9.0	7.6	7.8	8.1	85.1	20	19	17	16	4	0	2	19	0	0	4	4	30	19	13	7	4	0	3	3.0	Februar
März	7.6	7.8	7.5	7.6	92.8	20	16	14	14	0	0	1	19	0	0	6	5	37	16	12	10	3	4	0	2.7	März
April	7.8	7.7	7.3	7.6	53.7	16	13	9	5	1	0	1	16	0	0	10	5	8	20	12	20	7	3	5	2.6	April
Mai	7.4	6.6	6.8	6.9	27.4	11	10	7	0	0	1	4	15	0	0	32	3	13	14	4	11	5	10	1	2.7	Mai
Juni	8.4	8.5	7.8	8.2	134.0	20	20	16	0	0	4	1	20	0	0	23	0	5	3	6	21	10	21	1	2.3	Juni
Juli	7.1	7.0	7.4	7.2	97.8	18	16	13	0	0	4	2	15	4	0	36	2	11	7	5	12	6	10	4	2.0	Juli
August . . .	7.8	7.3	7.0	7.4	89.8	17	17	14	0	0	1	3	15	0	0	24	1	11	18	6	19	2	9	3	2.3	August
September .	7.5	7.5	7.8	7.6	177.7	19	19	18	0	0	0	2	16	0	0	4	3	16	22	14	17	4	9	1	3.0	September
Oktober . .	6.7	6.7	6.7	6.7	139.9	22	18	17	10	10	0	2	13	0	0	2	4	30	17	4	7	13	14	2	3.2	Oktober
November .	7.2	8.3	7.3	7.6	127.8	19	19	18	11	1	0	3	18	0	0	2	4	41	10	5	15	4	7	2	3.2	November
December .	8.0	8.4	8.3	8.2	44.9	15	14	12	14	0	2	1	21	0	0	2	6	50	15	8	2	2	4	4	2.9	December
Jahr	7.8	7.7	7.5	7.6	1208.0	221	205	177	79	20	12	23	211	4	3	149	37	263	175	98	171	74	97	31	2.8	Jahr

Hatfjelddalen.

H = 222 m h_t = 1.8 m h_r = 2.0 m

Januar . . .	8.6	8.8	8.7	8.7	186.6	25	25	20	17	1	0	1	23	0	0	0	2	6	5	1	2	41	0	36	1.7	Januar
Februar . .	8.0	7.8	7.7	7.8	86.8	21	20	14	20	0	0	3	18	0	0	0	3	14	9	2	2	10	0	44	1.3	Februar
März	5.6	6.5	5.8	6.0	79.9	17	13	11	13	0	0	7	12	0	0	2	4	15	5	0	0	20	1	46	1.3	März
April	6.1	7.5	7.2	6.9	35.3	16	13	6	11	1	0	4	15	0	0	0	3	9	14	4	9	23	0	28	1.6	April
Mai	6.0	6.4	5.9	6.1	42.2	16	13	8	2	0	0	6	14	0	0	5	6	19	9	2	1	22	5	24	1.6	Mai
Juni	8.8	8.3	7.8	8.3	103.3	21	21	13	0	0	0	1	21	0	0	4	3	2	3	0	6	43	12	17	1.9	Juni
Juli	6.6	6.9	6.3	6.6	96.7	19	14	12	0	0	0	5	14	0	0	2	0	11	10	12	4	24	3	27	1.7	Juli
August . . .	7.9	8.1	7.7	7.9	75.5	20	18	15	0	0	0	2	21	0	0	2	3	10	18	5	3	17	3	32	1.5	August
September .	9.0	9.1	8.2	8.8	85.2	20	19	14	0	0	0	0	24	0	0	0	4	15	5	4	6	11	2	43	1.4	September
Oktober . .	7.2	7.8	7.2	7.4	216.0	21	17	15	12	0	2	4	19	0	0	2	4	8	5	2	1	22	6	43	1.5	Oktober
November .	6.5	7.5	6.0	6.7	119.8	16	15	12	13	0	1	6	15	0	0	0	3	8	0	0	3	10	1	65	0.7	November
December .	7.4	8.0	7.5	7.6	42.1	21	20	9	20	0	0	3	19	0	0	2	5	21	1	1	0	4	0	59	0.9	December
Jahr	7.3	7.7	7.2	7.4	1169.4	233	208	149	108	2	3	42	215	0	0	19	40	138	84	33	37	247	33	464	1.4	Jahr

Skaalvær.

H = 6 m h_t = 1.5 m h_r = 1.5 m

Januar . . .	9.1	9.1	8.2	8.8	110.1	28	27	25	6	5	0	0	23	3	3	2	0	5	17	12	27	18	12	0	4.2	Januar
Februar . .	7.7	7.3	7.0	7.3	76.1	21	19	17	15	2	0	0	11	2	0	4	3	14	28	13	13	5	4	0	4.4	Februar
März	7.7	7.7	8.2	7.9	73.2	24	16	13	16	4	0	0	19	0	0	6	3	26	17	14	14	7	6	0	3.7	März
April	7.2	7.1	7.4	7.2	50.0	20	19	12	5	1	0	0	12	0	0	14	5	9	14	25	13	5	5	0	3.3	April
Mai	6.5	6.5	6.5	6.5	29.5	17	13	11	1	0	0	0	10	0	0	28	13	10	11	11	12	5	3	0	3.0	Mai
Juni	8.1	8.2	8.3	8.2	132.9	24	19	18	0	0	3	0	20	0	0	24	5	1	4	6	24	11	15	0	2.8	Juni
Juli	6.4	6.6	6.9	6.6	77.8	20	15	12	0	0	4	0	11	3	0	32	12	7	8	7	18	3	4	2	2.6	Juli
August . . .	7.5	6.5	6.4	6.8	82.1	21	18	13	0	0	5	1	12	0	0	28	3	12	16	16	8	0	10	0	3.0	August
September .	7.5	7.2	7.9	7.5	134.0	21	19	17	0	0	0	0	12	0	0	8	5	21	12	12	20	8	4	0	3.6	September
Oktober . .	7.2	6.7	7.5	7.1	116.8	24	22	15	11	7	0	0	13	0	1	8	3	27	18	6	8	7	16	0	4.3	Oktober
November .	7.6	7.8	7.1	7.5	88.6	22	17	16	10	3	0	0	13	0	0	7	6	33	4	12	16	4	8	0	4.3	November
December .	7.6	8.9	7.5	8.0	33.2	20	16	10	13	0	0	0	16	0	0	5	7	37	22	13	2	1	5	1	3.6	December
Jahr	7.5	7.5	7.4	7.4	1004.3	262	220	179	77	22	12	1	172	8	4	166	65	202	171	147	175	74	92	3	3.6	Jahr

Myken.

$\lambda = 12^0\ 29'$ E $= 49^m\ 56^s$ $\varphi = 66^0\ 46'$ N $C_g = 1.85$ mb bei 1015 mb

Monat.	Luftdruck. Normalschwere. Mittel.	Luft-Temperatur. Min.	I	II	III	Mittel.	beobachtetes Max.	Dat.	Min.	Dat.	Absolute Feuchtigkeit. I	II	III	Mittel.	Relat. Feuchtigk. I	II	III	Mittel.	Monat.
Januar	998.1	2.5	4.3	4.6	4.3	4.4	7.9	12	-0.6	10	4.5	4.3	4.3	4.4	71	67	68	69	Januar
Februar . . .	95.0	-0.6	0.5	1.4	0.8	0.8	5.0	5	-4.1	22	3.1	3.0	3.0	3.0	61	57	59	60	Februar
März	1005.7	-3.2	-1.4	-0.3	-1.0	-1.1	5.3	3	-9.2	8	2.5	2.6	2.6	2.6	56	54	57	56	März
April	05.0	2.1	4.1	5.8	5.0	4.5	9.4	29	-2.2	1	4.1	4.1	4.3	4.1	65	59	64	65	April
Mai	11.4	4.6	6.6	8.2	7.1	6.7	15.0	29	1.0	1	4.7	4.8	4.6	4.6	64	59	60	63	Mai
Juni	09.7	7.6	9.3	10.7	9.4	9.3	14.6	30	5.9	20	6.8	6.6	6.8	6.6	77	70	76	80	Juni
Juli	11.6	12.2	14.6	16.5	14.9	14.6	23.4	17	9.0	12	9.7	9.2	9.4	9.3	78	67	74	79	Juli
August	06.0	12.0	13.8	15.8	13.9	13.9	21.0	24	8.8	15	9.2	9.4	9.6	9.3	79	71	81	81	August
September . .	01.5	8.8	10.5	12.4	10.7	10.8	15.8	4	7.1	30	7.3	7.1	7.4	7.2	77	67	77	76	September
Oktober . . .	00.1	2.6	4.3	5.0	4.0	4.3	10.2	6	-1.4	14	4.1	4.3	4.3	4.2	65	64	70	67	Oktober
November . .	04.9	-0.8	0.9	1.2	0.8	1.0	7.4	12	-7.2	30	3.4	3.1	3.1	3.2	68	61	62	65	November
December . .	994.7	-2.8	-0.8	-0.7	-0.8	-0.8	6.2	8	-8.4	19	2.9	2.9	2.9	2.9	63	61	61	62	December
Jahr	1003.6	3.8	5.6	6.7	5.8	5.7	23.4		-9.2		5.2	5.1	5.2	5.1	69	63	67	69	Jahr

Glomfjord.

$\lambda = 14^0\ 0'$ E $= 56^m\ 0^s$ $\varphi = 66^0\ 48'$ N

Januar		1.1	2.9	3.5	3.1	3.2	10.5	14	-2.9	8									Januar
Februar . . .		-2.8	-1.0	-0.7	-1.1	-1.0	4.1	11	-9.7	22									Februar
März		-5.7	-3.3	-1.3	-3.1	-2.9	4.2	18	-14.0	8									März
April		1.5	3.4	5.7	4.2	3.9	11.6	10	-3.4	2									April
Mai		4.3	6.6	9.0	7.8	7.0	17.0	29	-0.8	6									Mai
Juni		7.7	9.6	11.4	10.8	9.9	18.3	18	6.0	15									Juni
Juli		13.1	15.6	17.8	17.4	16.1	24.5	5	8.0	1									Juli
August		12.1	13.8	15.8	14.7	14.2	19.5	2	7.2	15									August
September .		8.1	9.7	11.7	10.5	10.2	14.6	6	6.1	2									September
Oktober . . .		0.6	2.2	3.0	2.2	2.3	11.3	1	-6.0	15									Oktober
November . .		-3.6	-1.6	-1.1	-1.2	-1.3	6.9	12	-12.3	30									November
December . .		-5.8	-2.9	-2.9	-3.0	-2.9	5.6	8	-14.5	19									December
Jahr		2.6	4.6	6.0	5.2	4.9	24.5		-14.5										Jahr

Fleinvær.

$\lambda = 13^0\ 47'$ E $= 55^m\ 8^s$ $\varphi = 67^0\ 10'$ N

Januar		2.5	4.1	4.3	4.3	4.2	8.2	14	-0.4	8									Januar
Februar . . .		-0.9	0.5	1.0	0.8	0.7	5.4	13	-4.0	22									Februar
März		-3.4	-2.0	-1.0	-1.3	-1.6	4.8	18	-10.5	8									März
April		2.5	4.2	5.1	4.5	4.2	9.4	14	-1.1	2									April
Mai		4.8	6.7	7.5	7.1	6.6	14.6	17	1.2	1									Mai
Juni		8.2	9.6	10.3	10.0	9.6	13.8	21	6.8	13									Juni
Juli		12.3	14.8	15.9	15.0	14.6	24.0	5	9.5	12									Juli
August		11.6	14.0	15.4	13.7	13.8	20.2	3	8.6	15									August
September . .		9.1	10.7	11.9	11.0	10.9	14.0	4	7.3	11									September
Oktober . . .		2.3	3.6	4.3	3.7	3.8	10.4	1	-2.0	15									Oktober
November . .		-1.0	0.5	0.6	0.8	0.6	7.4	13	-9.3	30									November
December . .		-3.2	-1.2	-1.1	-1.1	-1.1	6.9	8	-8.8	18									December
Jahr		3.7	5.5	6.2	5.7	5.5	24.0		-10.5										Jahr

Bodø.

$\lambda = 14^0\ 24'$ E $= 57^m\ 36^s$ $\varphi = 67^0\ 17'$ N $C_g = 1.85$ mb bei 999 mb

Januar	997.5	0.8	3.2	3.7	3.7	3.5	9.2	12	-5.0	8	4.9	4.8	4.9	4.9	83	80	81	82	Januar
Februar	995.6	-3.2	-1.2	-0.5	-1.0	-1.0	4.7	5	-10.1	24	3.4	3.3	3.2	3.3	78	72	71	74	Februar
März	1005.5	-6.4	-4.0	-2.0	-2.8	-3.3	4.4	18	-14.4	7	2.8	3.0	3.0	2.9	75	70	75	75	März
April	04.9	1.6	3.9	5.0	4.0	3.8	9.4	14	-3.3	3	4.7	4.5	4.6	4.5	77	70	74	77	April
Mai	11.1	4.2	6.8	8.4	7.7	6.9	16.3	29	-0.7	2	5.5	5.6	5.5	5.4	74	66	70	74	Mai
Juni	09.2	7.9	10.3	11.1	10.7	10.1	15.8	21	6.0	12	7.4	7.4	7.5	7.3	80	76	79	82	Juni
Juli	11.2	12.2	16.1	16.9	16.7	15.6	25.5	4	8.2	12	10.1	10.1	10.2	10.0	75	72	74	76	Juli
August	05.8	11.8	14.6	16.1	14.8	14.4	20.7	24	7.6	15	9.3	9.4	9.4	9.3	76	70	75	77	August
September . .	01.4	7.7	10.1	12.2	10.7	10.5	15.1	17	6.0	20	6.9	7.0	7.0	6.9	76	67	73	74	September
Oktober . . .	999.8	0.1	2.0	2.9	2.1	2.1	9.4	1	-6.2	15	4.2	4.1	4.2	4.2	78	72	77	77	Oktober
November . .	1004.6	-3.9	-1.7	-1.2	-1.7	-1.5	8.9	13	-13.7	30	3.4	3.4	3.4	3.4	76	73	74	75	November
December . .	995.2	-6.4	-3.7	-3.8	-3.5	-3.7	7.5	7	-13.9	20	2.7	2.7	2.9	2.8	71	71	76	73	December
Jahr	1003.5	2.2	4.7	5.7	5.1	4.8	25.5		-14.4		5.4	5.4	5.5	5.4	77	72	75	76	Jahr

1925.

Myken

$H = 14\,m$, $H_b = 18.0\,m$ — $h_t = 1.6\,m$ — $h_r = 1.6\,m$

Monat.	Bewölkung. I	II	III	Mittel.	Niederschlag. Summe.	Zahl der Tage mit Niederschlag.	≦0.1 mm.	≦1.0 mm.	Schnee. ≦0.1 mm.	Hagel.	Nebel.	Heiter.	Trübe.	Gewitter.	Sturm.	Vindverteilung. N	NE	E	SE	S	SW	W	NW	C	Windstärke. Mittel.	Monat.
Januar . . .	8.2	8.7	7.7	8.2	20.8	28	17	6	6	7	1	1	17	0	4	1	0	9	6	15	30	27	5	0	5.3	Januar
Februar . .	6.9	6.6	6.5	6.7	14.1	20	15	5	15	6	0	2	13	0	2	2	15	20	12	10	15	6	1	3	4.7	Februar
März	7.8	7.6	7.2	7.5	30.0	26	18	9	17	5	0	1	16	0	0	5	15	13	16	14	13	10	3	4	4.0	März
April	6.0	7.0	7.3	6.8	26.6	22	19	7	11	1	2	3	13	0	1	6	13	13	8	20	17	7	3	3	3.3	April
Mai	7.0	6.3	6.1	6.5	34.8	20	10	8	0	1	0	2	9	0	0	14	28	11	5	11	8	5	7	4	2.7	Mai
Juni	8.0	7.6	8.0	7.9	71.7	24	17	13	0	0	1	2	16	0	0	24	7	1	2	10	21	10	11	4	2.7	Juni
Juli.	6.4	5.6	6.4	6.1	60.6	20	14	12	0	0	3	4	10	5	0	8	30	9	3	14	13	6	3	7	2.4	Juli
August. . .	7.2	6.8	6.4	6.8	70.8	21	12	10	0	0	1	3	12	1	0	15	18	19	3	12	5	2	4	15	2.0	August
September .	6.8	6.5	6.8	6.7	119.6	22	18	15	0	0	0	3	13	0	0	4	10	20	5	10	25	8	1	7	3.5	September
Oktober . .	6.7	7.1	6.6	6.8	76.9	26	18	16	14	10	0	2	14	0	3	4	16	11	10	6	12	17	11	6	4.2	Oktober
November .	7.3	7.2	6.7	7.1	93.6	23	18	10	12	4	0	3	15	0	0	8	9	13	14	9	19	7	7	4	4.1	November
December .	7.8	7.5	7.2	7.5	47.9	21	11	9	9	3	0	0	15	0	1	5	16	14	17	21	4	5	2	9	3.8	December
Jahr	7.2	7.0	6.9	7.0	667.4	273	187	120	84	37	8	26	163	6	11	96	177	153	101	152	182	110	58	66	3.6	Jahr

Glomfjord.

$H = 6\,m$ — $h_t = 1.6\,m$ — $h_r = 1.7\,m$

Monat.	Bewölkung. I	II	III	Mittel.	Niederschlag. Summe.	Zahl der Tage mit Niederschlag.	≦0.1 mm.	≦1.0 mm.	Schnee. ≦0.1 mm.	Hagel.	Nebel.	Heiter.	Trübe.	Gewitter.	Sturm.	Vindverteilung. N	NE	E	SE	S	SW	W	NW	C	Windstärke. Mittel.	Monat.
Januar . . .	9.1	9.2	9.4	9.2	367.5	26	24	23	14	5	0	1	28	2	0	5	1	2	12	9	18	4	18	24	1.9	Januar
Februar . .	7.6	7.6	6.8	7.3	121.7	16	16	16	16	1	0	3	14	2	0	2	5	7	24	9	10	2	3	22	1.2	Februar
März	8.6	7.7	8.4	8.2	144.9	14	14	12	12	2	0	2	22	1	0	5	5	20	21	7	6	6	6	17	1.2	März
April	7.5	7.6	8.7	7.9	108.2	21	21	16	13	0	0	0	18	0	0	2	0	7	17	12	11	7	0	34	1.0	April
Mai	7.7	8.2	7.9	7.9	78.7	15	15	14	2	0	0	2	19	0	0	1	2	6	25	4	3	7	2	43	0.7	Mai
Juni	8.7	8.9	9.1	8.9	121.7	22	22	18	0	0	0	0	23	0	0	5	0	0	1	1	5	22	2	54	0.5	Juni
Juli.	8.3	7.6	7.5	7.8	111.5	15	15	13	0	0	0	3	21	2	0	3	0	4	17	0	8	3	2	56	0.5	Juli
August. . .	7.7	8.8	8.2	8.2	98.0	21	21	14	0	0	0	2	23	0	0	2	0	7	13	3	4	3	0	61	0.5	August
September .	8.2	8.0	8.7	8.3	155.0	17	17	12	0	0	0	1	20	0	0	1	0	6	13	10	18	2	1	39	0.9	September
Oktober . .	8.3	8.1	7.8	8.1	355.6	18	18	18	12	7	0	2	20	1	0	4	3	11	12	7	6	4	17	29	1.4	Oktober
November .	8.1	8.5	7.3	8.0	339.5	19	18	16	13	1	0	2	17	0	0	3	10	8	9	1	15	1	5	38	1.1	November
December .	9.0	8.7	8.1	8.6	90.0	17	17	12	13	1	0	1	21	0	0	1	19	6	10	12	5	0	5	35	1.3	December
Jahr	8.2	8.2	8.2	8.2	2092.3	221	218	184	95	17	0	19	246	8	0	34	45	84	174	75	109	61	61	452	1.0	Jahr

Fleinvær.

$H = 8\,m$ — $h_t = 1.6\,m$ — $h_r = 1.5\,m$

Monat.	Bewölkung. I	II	III	Mittel.	Niederschlag. Summe.	Zahl der Tage mit Niederschlag.	≦0.1 mm.	≦1.0 mm.	Schnee. ≦0.1 mm.	Hagel.	Nebel.	Heiter.	Trübe.	Gewitter.	Sturm.	Vindverteilung. N	NE	E	SE	S	SW	W	NW	C	Windstärke. Mittel.	Monat.
Januar . . .	7.7	8.4	7.8	8.0	138.3	24	23	22	8	0	0	2	17	0	4	0	0	8	14	4	39	22	6	0	5.6	Januar
Februar . .	6.5	6.8	6.8	6.7	60.5	19	17	14	14	3	0	5	11	1	0	1	8	20	25	4	18	4	2	2	4.4	Februar
März	6.8	6.4	7.1	6.8	55.7	16	14	13	14	0	0	5	13	0	0	4	15	14	23	3	20	7	6	1	4.1	März
April	6.9	6.4	7.8	7.0	60.0	16	13	12	6	1	0	3	15	0	1	6	10	7	22	4	28	6	4	3	3.7	April
Mai	6.9	6.6	5.7	6.4	20.5	14	11	6	1	0	0	2	10	2	0	14	23	9	8	0	19	5	12	3	3.7	Mai
Juni	7.9	7.6	8.0	7.8	16.7	16	13	8	0	0	0	1	16	0	0	14	9	5	1	2	42	7	9	1	3.5	Juni
Juli.	6.4	7.1	6.6	6.7	47.2	14	11	10	0	0	0	4	15	4	0	14	23	8	3	3	19	10	1	12	3.1	Juli
August. . .	7.2	7.4	7.1	7.2	71.6	15	14	11	0	0	0	4	15	0	0	12	14	24	10	1	13	5	2	12	2.8	August
September .	6.7	6.8	7.8	7.1	54.2	16	14	10	0	0	0	3	15	0	0	4	7	16	14	5	29	7	1	7	3.7	September
Oktober . .	7.4	7.2	6.3	7.0	152.5	22	21	18	9	3	0	4	13	1	1	5	10	21	12	2	14	13	13	3	4.6	Oktober
November .	7.0	7.2	6.4	6.9	106.2	19	19	16	12	2	0	3	15	0	0	5	9	16	14	2	30	9	4	1	4.6	November
December .	8.1	7.3	6.6	7.3	41.2	16	12	11	9	1	0	1	16	0	0	7	16	29	16	4	12	1	5	3	4.3	December
Jahr	7.1	7.1	7.0	7.1	824.6	207	182	151	73	10	0	37	171	8	6	86	144	177	162	34	283	96	65	48	4.0	Jahr

Bodø.

$H = 17\,m$, $H_b = 22.3\,m$ — $h_t = 5.6\,m$ — $h_r = 3.0\,m$

Monat.	Bewölkung. I	II	III	Mittel.	Niederschlag. Summe.	Zahl der Tage mit Niederschlag.	≦0.1 mm.	≦1.0 mm.	Schnee. ≦0.1 mm.	Hagel.	Nebel.	Heiter.	Trübe.	Gewitter.	Sturm.	Vindverteilung. N	NE	E	SE	S	SW	W	NW	C	Windstärke. Mittel.	Monat.
Januar . . .	7.4	7.6	8.2	7.7	139.4	26	25	21	13	0	0	1	15	0	3	1	0	20	8	11	28	14	7	4	4.3	Januar
Februar . .	6.6	5.4	5.5	5.8	67.1	19	15	15	14	2	0	4	9	0	0	2	2	48	8	3	13	3	2	3	3.2	Februar
März	5.9	6.0	6.2	6.0	68.9	14	13	12	13	2	0	3	7	0	0	1	5	54	6	4	10	7	4	2	3.1	März
April	6.7	6.0	6.9	6.5	101.2	19	14	13	7	0	0	2	12	0	1	4	6	33	14	5	15	4	4	5	2.5	April
Mai	7.0	6.3	5.2	6.2	54.8	18	13	12	2	2	2	4	8	0	0	16	9	27	4	8	6	9	6	8	2.4	Mai
Juni	7.7	7.2	7.3	7.4	90.7	22	18	15	0	0	1	1	17	0	0	14	9	3	2	8	26	11	8	9	2.0	Juni
Juli.	5.8	5.8	5.4	5.7	91.1	16	14	11	0	0	3	5	12	4	0	12	14	21	1	4	9	9	4	19	1.8	Juli
August. . .	6.1	5.9	6.2	6.1	58.5	17	12	9	0	0	1	4	7	0	0	12	14	20	9	6	5	1	1	25	1.5	August
September .	5.8	5.7	5.8	5.8	74.8	16	16	12	0	0	1	2	5	0	0	4	10	30	15	6	13	3	0	9	2.7	September
Oktober . .	6.9	6.5	6.5	6.6	150.3	21	19	19	13	8	0	4	14	0	0	8	2	47	5	1	7	10	9	4	3.1	Oktober
November .	6.7	6.5	6.0	6.4	132.8	17	17	16	10	1	0	4	12	0	0	4	4	48	7	4	14	6	3	0	3.3	November
December .	6.2	6.5	6.9	6.5	25.4	13	9	8	7	2	0	3	12	0	0	0	9	57	18	0	2	2	4	1	3.3	December
Jahr	6.6	6.3	6.3	6.4	1055.0	218	185	163	79	17	8	37	130	4	4	78	84	408	97	60	148	79	52	89	2.8	Jahr

Grøtøy.

$\lambda = 14^0\ 46'\,E = 59^m\ 4^s$ $\varphi = 67^0\ 50'\,N$

Monat.	Luftdruck. (Normalschwere). Mittel.	Luft-Temperatur. Min.	I	II	III	Mittel.	beobachtetes Max.	Dat.	Min.	Dat.	Absolute Feuchtigkeit. I	II	III	Mittel.	Relat. Feuchtigk. I	II	III	Mittel	Monat.
Januar		0.7	2.9	3.0	3.1	3.0	7.2	14	-4.6	9	4.8	4.9	4.7	4.8	83	85	82	82	Januar
Februar . . .		-2.3	-0.7	0.0	-0.5	-0.5	3.4	12	-7.2	22	3.6	3.5	3.6	3.6	78	74	77	77	Februar
März		-5.5	-3.1	-1.5	-2.2	-2.6	3.2	18	-13.0	8	2.9	3.0	3.1	3.0	73	69	74	73	März
April		1.2	2.8	5.0	3.6	3.4	10.0	8	-2.4	2	4.3	4.6	4.4	4.3	74	69	72	74	April
Mai		4.0	6.5	8.4	7.0	6.7	17.0	29	-0.3	1	5.1	5.7	5.6	5.4	70	68	74	74	Mai
Juni		7.3	9.6	11.6	10.6	9.9	18.1	21	5.6	5	6.9	8.1	7.7	7.5	76	80	82	78	Juni
Juli		12.7	16.1	16.6	15.9	15.5	24.8	4	7.9	25	9.2	10.8	10.2	10.0	68	77	77	70	Juli
August		11.9	14.7	16.1	14.7	14.5	19.6	10	9.5	9	8.6	9.8	9.6	9.2	69	73	77	73	August
September . .		8.1	10.0	11.7	10.8	10.4	14.8	4	5.7	17	6.4	7.3	7.5	7.0	69	72	77	73	September
Oktober . . .		0.5	2.4	3.1	2.7	2.5	9.5	1	-4.9	15	4.3	4.5	4.5	4.4	77	76	79	78	Oktober
November . .		-2.9	-0.8	-0.3	-0.6	-0.6	6.8	12	-11.6	30	3.5	3.7	3.5	3.6	77	77	74	75	November
December . .		-5.8	-2.6	-2.3	-2.2	-2.4	5.8	8	-11.7	1	3.0	3.0	3.0	3.0	72	70	72	72	December
Jahr		2.5	4.8	6.0	5.2	5.0	24.8		-13.0		5.2	5.7	5.6	5.6	74	74	76	75	Jahr

Lødingen.

$\lambda = 16^0\ 0'\,E = 1^h\ 4^m\ 0^s$ $\varphi = 68^0\ 25'\,N$

Januar		-0.6	1.7	2.2	2.2	2.0	6.6	21	-7.0	9	4.3	4.5	4.5	4.4	80	82	82	81	Januar
Februar . . .		-3.8	-1.4	-0.7	-1.6	-1.3	3.0	9	-8.6	23	3.3	3.6	3.3	3.4	73	77	75	74	Februar
März		-6.7	-3.6	-1.6	-3.2	-3.2	3.6	18	-13.0	7	2.7	3.2	2.7	2.9	69	71	67	68	März
April		-0.5	3.2	4.5	3.1	2.9	9.4	16	-5.2	2	4.5	4.8	4.5	4.5	76	74	76	76	April
Mai		2.6	7.1	8.4	6.8	6.4	16.5	31	-2.0	1	5.8	6.3	5.7	5.8	77	77	77	77	Mai
Juni		8.2	11.2	12.2	11.3	10.9	18.2	18	5.0	25	8.5	8.8	8.1	8.4	86	84	81	83	Juni
Juli		11.6	16.0	17.5	16.1	15.5	26.8	6	6.5	25	10.4	11.0	10.0	10.4	77	74	74	76	Juli
August		10.8	13.8	16.2	14.8	14.0	20.8	10	8.2	4	9.3	10.5	9.6	9.7	80	77	77	79	August
September . .		7.4	9.9	11.6	9.8	10.0	15.2	6	5.0	26	7.5	7.9	7.6	7.6	83	78	84	83	September
Oktober . . .		-0.9	1.4	2.5	1.5	1.6	9.6	1	-5.0	14	4.2	4.5	4.3	4.3	80	81	81	81	Oktober
November . .		-3.6	-1.3	-1.0	-1.2	-1.2	7.0	13	-13.4	29	3.7	3.7	3.6	3.7	82	81	80	81	November
December . .		-6.0	-3.4	-3.3	-3.2	-3.3	4.5	8	-11.0	18	3.0	3.0	3.1	3.0	77	77	77	77	December
Jahr		1.5	4.6	5.7	4.7	4.5	26.8		-13.4		5.6	6.0	5.6	5.7	78	78	78	78	Jahr

Svolvær.

$\lambda = 14^0\ 37'\,E = 58^m\ 28^s$ $\varphi = 68^0\ 14'\,N$ $C_g = 2.05$ mb bei 1025 mb

Januar	997.0	0.3	2.6	2.7	3.0	2.8	7.4	20	-4.6	9	4.8	5.1	5.1	5.0	83	89	88	86	Januar
Februar . . .	96.6	-2.7	-0.9	-0.2	-1.0	-0.8	3.0	1	-6.7	8	3.7	4.0	3.7	3.8	81	82	81	81	Februar
März	1006.9	-5.5	-3.6	-1.5	-2.9	-2.9	4.0	18	-11.2	7	2.6	3.4	3.0	3.0	67	76	73	70	März
April	06.5	0.6	2.5	4.1	2.9	2.8	7.9	16	-5.2	2	4.6	4.8	4.6	4.6	82	77	79	81	April
Mai	12.9	3.7	6.0	7.8	6.8	6.3	15.9	29	-0.6	1	5.3	5.5	5.5	5.3	75	69	73	77	Mai
Juni	10.1	8.0	10.0	11.3	10.8	10.1	17.4	17	6.4	13	7.2	7.7	7.6	7.4	80	77	78	81	Juni
Juli	12.9	12.8	15.3	17.6	16.7	15.8	25.2	4	7.9	25	10.0	10.2	10.4	10.1	78	69	73	78	Juli
August	07.6	12.4	14.4	16.6	14.9	14.7	21.3	1	11.0	21	9.2	9.5	9.6	9.3	76	68	76	77	August
September . .	03.0	8.5	10.1	12.0	10.6	10.6	15.3	4	5.8	20	7.4	7.7	7.5	7.4	80	74	78	78	September
Oktober . . .	00.8	0.4	1.8	2.8	2.0	2.1	9.0	1	-3.8	15	4.0	4.2	4.2	4.1	75	72	77	76	Oktober
November . .	05.2	-2.9	-0.9	-0.2	-0.6	-0.6	7.3	18	-11.9	30	3.3	3.6	3.5	3.5	70	74	73	72	November
December . .	996.8	-4.9	-2.5	-2.3	-2.3	-2.4	5.6	8	-10.7	19	3.0	3.0	3.0	3.0	71	72	72	72	December
Jahr	1004.7	2.6	4.6	5.9	5.1	4.9	25.2		-11.9		5.4	5.7	5.6	5.5	76	75	77	77	Jahr

Sørvaagen.

$\lambda = 13^0\ 1'\,E = 52^m\ 4^s$ $\varphi = 67^0\ 53'\,N$

Januar		1.4	3.5	3.7	3.7	3.6	8.1	12	-2.5	8									Januar
Februar . . .		-1.6	0.4	0.6	0.2	0.3	4.0	3	-6.0	21									Februar
März		-4.3	-1.7	-1.0	-1.8	-1.7	4.6	18	-11.0	8									März
April		0.8	3.4	4.2	3.5	3.2	8.3	8	-3.6	2									April
Mai		3.7	6.4	6.8	6.3	5.9	14.0	29	0.2	6									Mai
Juni		7.7	10.0	10.5	10.2	9.6	16.4	18	5.8	16									Juni
Juli		11.9	15.0	15.2	15.0	14.5	23.6	4	7.0	25									Juli
August		11.9	14.6	14.9	13.6	13.8	17.6	1	10.0	13									August
September . .		8.9	10.9	11.4	10.4	10.6	14.2	7	6.7	27									September
Oktober . . .		1.3	3.0	3.6	2.9	3.1	8.8	1	-2.7	16									Oktober
November . .		-1.3	0.6	0.6	0.7	0.6	8.2	13	-8.0	30									November
December . .		-3.6	-1.4	-1.0	-1.0	-1.1	7.3	8	-9.2	18									December
Jahr		3.1	5.4	5.8	5.3	5.2	23.6		-11.0										Jahr

1925.

Grøtøy.

H = 2 m h_t = 2.0 m h_r = 1.6 m

Monat.	Bewölkung. I	II	III	Mittel.	Niederschlag. Summe.	Zahl der Tage mit Niederschlag.	≥ 0.1 mm.	≥ 1.0 mm.	Schnee. ≥ 0.1 mm.	Hagel.	Nebel.	Heiter.	Trübe.	Gewitter.	Sturm.	Windverteilung. N	NE	E	SE	S	SW	W	NW	C	Windstärke. Mittel.	Monat.
Januar . . .	7.3	7.8	7.5	7.5	101.8	24	24	19	9	3	2	0	13	0	5	2	4	3	11	15	33	15	9	1	4.2	Januar
Februar . .	6.7	6.0	6.0	6.2	44.0	21	20	15	17	3	0	1	8	2	0	4	16	10	12	20	12	8	1	1	3.3	Februar
März	6.2	6.4	6.3	6.3	33.3	19	18	9	15	4	0	2	8	0	0	4	12	15	19	19	11	6	4	3	2.8	März
April	6.6	5.9	6.6	6.4	63.4	22	20	12	8	1	1	1	7	1	0	8	12	5	16	21	14	8	5	1	2.6	April
Mai	6.5	6.4	6.4	6.4	25.2	18	17	7	4	0	0	0	8	0	0	13	18	5	11	9	17	11	8	1	2.4	Mai
Juni	7.1	6.9	7.2	7.1	62.0	20	20	15	0	0	0	1	16	0	0	11	10	2	0	3	37	14	11	2	2.2	Juni
Juli	6.2	6.0	5.7	6.0	70.3	18	17	12	0	0	0	3	8	3	0	16	24	4	4	11	19	5	5	5	2.2	Juli
August . . .	6.0	5.5	6.1	5.9	66.5	14	14	6	0	0	0	3	6	0	0	13	32	9	6	7	12	3	0	11	1.8	August
September .	6.2	5.9	6.5	6.2	101.4	16	16	12	0	0	0	3	9	0	0	5	14	11	18	10	20	7	3	2	2.5	September
Oktober . .	5.9	6.4	6.4	6.2	123.1	24	24	15	14	6	0	0	6	0	0	8	12	15	13	8	6	11	16	4	3.0	Oktober
November .	6.3	6.3	5.7	6.1	135.6	22	21	15	14	2	0	4	9	0	0	8	15	14	8	16	16	5	6	2	2.7	November
December .	5.6	5.7	6.2	5.8	49.9	19	19	8	17	0	0	3	9	0	0	8	25	16	15	18	6	1	4	0	2.6	December
Jahr	6.4	6.3	6.4	6.3	876.5	237	230	145	98	19	3	21	107	6	5	100	194	109	133	157	203	94	72	33	2.7	Jahr

Lødingen.

H = 9 m h_t = 1.6 m h_r = 1.8 m

Monat.	I	II	III	Mittel.	Niederschlag. Summe.	Niederschlag.	≥ 0.1 mm.	≥ 1.0 mm.	Schnee. ≥ 0.1 mm.	Hagel.	Nebel.	Heiter.	Trübe.	Gewitter.	Sturm.	N	NE	E	SE	S	SW	W	NW	C	Windstärke. Mittel.	Monat.
Januar . . .	8.4	8.3	8.4	8.4	200.1	25	25	23	13	0	0	1	22	1	1	5	7	6	4	15	37	8	2	9	3.1	Januar
Februar . .	6.7	6.5	6.6	6.6	53.5	18	16	12	15	1	0	1	9	0	0	10	21	6	7	14	10	5	5	6	2.2	Februar
März	6.0	6.1	5.7	5.9	38.9	13	13	12	13	0	0	2	10	0	0	4	17	21	5	12	15	6	4	9	2.2	März
April	7.0	6.6	6.8	6.8	113.0	19	19	15	8	1	0	0	10	0	0	4	14	4	7	19	15	4	1	22	1.5	April
Mai	7.6	7.3	7.7	7.5	66.9	17	17	14	4	0	0	2	16	0	0	4	13	3	5	13	16	0	2	37	1.1	Mai
Juni	8.3	7.8	7.5	7.9	102.1	22	22	20	0	0	0	0	18	0	0	3	10	1	5	32	18	0	0	21	1.5	Juni
Juli	6.5	5.9	6.3	6.2	69.9	18	18	14	0	0	0	4	11	0	0	6	19	1	0	10	32	2	0	23	1.8	Juli
August . . .	6.9	6.6	7.2	6.9	54.0	9	9	8	0	0	0	1	14	0	0	4	28	5	2	8	10	1	0	35	1.4	August
September .	7.7	7.5	7.5	7.6	115.6	16	16	14	0	0	0	1	17	0	0	6	9	4	4	19	23	0	1	24	1.7	September
Oktober . .	7.2	7.6	7.5	7.4	137.1	16	16	12	11	0	0	0	14	0	0	10	8	12	1	2	11	14	9	26	1.6	Oktober
November .	7.8	8.0	7.3	7.7	122.3	18	18	14	12	0	0	0	16	0	1	9	7	6	11	11	12	6	7	21	2.2	November
December .	6.9	7.3	6.4	6.9	74.0	14	14	7	13	0	0	1	13	0	0	6	25	10	21	4	4	5	3	15	2.4	December
Jahr	7.2	7.1	7.1	7.2	1147.4	205	203	165	89	2	0	13	170	1	2	71	178	79	72	159	203	51	34	248	1.9	Jahr

Svolvær.

H = 1 m, H_b = 4.0 m h_t = 2.4 m h_r = 0.9 m

Monat.	I	II	III	Mittel.	Niederschlag. Summe.	Niederschlag.	≥ 0.1 mm.	≥ 1.0 mm.	Schnee. ≥ 0.1 mm.	Hagel.	Nebel.	Heiter.	Trübe.	Gewitter.	Sturm.	N	NE	E	SE	S	SW	W	NW	C	Windstärke. Mittel.	Monat.
Januar . . .	8.3	9.1	8.6	8.7	299.4	26	26	22	15	0	0	1	22	1	3	5	3	9	7	10	22	19	12	6	2.9	Januar
Februar . .	7.0	6.9	4.8	6.2	139.5	19	18	16	17	2	0	7	11	0	0	6	7	21	10	4	14	11	1	10	2.6	Februar
März	5.6	6.6	7.2	6.5	120.0	20	19	14	19	0	0	5	14	0	0	3	6	24	9	6	8	10	8	19	2.2	März
April	7.1	6.7	7.4	7.1	87.4	17	15	13	8	0	4	2	15	0	0	6	8	23	3	6	10	6	6	22	1.7	April
Mai	7.3	7.3	7.4	7.3	42.9	18	11	10	4	0	0	2	16	0	0	12	8	13	9	3	14	2	14	18	1.6	Mai
Juni	7.6	7.4	8.0	7.7	92.2	21	17	17	0	0	1	3	19	0	0	16	4	11	3	10	24	2	2	18	1.4	Juni
Juli	6.6	6.1	6.1	6.3	42.8	13	13	10	0	0	1	4	12	1	0	6	7	15	3	14	16	3	4	25	1.4	Juli
August . . .	6.7	6.1	6.1	6.3	53.0	11	10	7	0	0	0	6	14	1	0	11	4	20	8	8	11	0	2	29	1.1	August
September .	7.4	6.8	7.0	7.1	156.0	20	17	15	0	0	0	4	15	0	0	2	8	24	6	5	22	3	3	17	2.2	September
Oktober . .	7.0	7.1	5.7	6.6	189.4	21	21	16	16	6	0	3	16	0	0	21	8	10	9	0	4	5	17	19	2.4	Oktober
November .	7.4	7.5	6.2	7.0	305.6	22	22	19	15	0	0	5	17	0	0	17	11	10	1	1	26	3	12	9	2.5	November
December .	6.6	6.5	6.1	6.4	112.3	19	18	12	14	2	0	5	13	0	0	12	13	21	12	8	7	1	7	12	2.7	December
Jahr	7.0	7.0	6.7	6.9	1640.5	227	207	171	108	10	6	47	184	3	3	117	87	201	80	75	178	65	88	204	2.1	Jahr

Sørvaagen.

H = 10 m h_t = 2.0 m h_r = 1.6 m

Monat.	I	II	III	Mittel.	Niederschlag. Summe.	Niederschlag.	≥ 0.1 mm.	≥ 1.0 mm.	Schnee. ≥ 0.1 mm.	Hagel.	Nebel.	Heiter.	Trübe.	Gewitter.	Sturm.	N	NE	E	SE	S	SW	W	NW	C	Windstärke. Mittel.	Monat.
Januar . . .	8.8	9.2	9.0	9.0	219.2	27	26	24	13	5	0	0	25	0	2	1	0	8	10	5	24	36	8	1	4.6	Januar
Februar . .	7.4	7.0	7.5	7.3	118.3	22	22	16	19	1	0	0	16	0	0	2	19	17	7	8	9	15	4	3	3.8	Februar
März	7.8	7.6	7.9	7.8	112.9	23	21	17	20	1	0	1	18	0	0	10	18	11	8	6	11	17	7	5	3.5	März
April	7.2	7.0	8.2	7.5	105.6	22	19	15	11	0	2	2	16	0	0	10	17	11	7	5	7	22	2	9	2.7	April
Mai	7.1	7.8	7.6	7.5	53.2	15	13	8	2	3	0	0	16	0	0	10	18	26	1	1	10	13	6	8	2.6	Mai
Juni	7.6	7.6	6.9	7.4	160.3	20	19	16	0	0	0	2	17	0	0	19	11	9	0	1	21	15	5	9	2.5	Juni
Juli	6.4	6.1	6.7	6.4	36.1	17	14	11	0	0	1	3	13	1	0	3	18	23	1	3	18	11	5	11	2.6	Juli
August . . .	6.8	6.6	6.1	6.5	72.5	14	11	8	0	0	0	3	11	0	0	12	12	29	5	1	10	8	2	14	2.4	August
September .	7.3	6.8	7.1	7.1	234.0	20	17	14	0	0	0	1	16	0	0	5	9	26	8	3	18	11	1	9	3.3	September
Oktober . .	6.3	7.3	7.4	7.0	181.3	24	23	18	18	2	0	1	16	0	1	20	11	16	7	3	4	14	17	1	3.5	Oktober
November .	7.9	7.8	7.7	7.8	308.3	22	21	18	16	1	0	1	18	0	0	10	14	13	2	3	19	11	15	3	3.4	November
December .	8.0	7.8	7.8	7.9	135.3	24	22	16	18	2	0	1	19	0	0	6	17	18	15	6	13	5	10	3	4.0	December
Jahr	7.4	7.4	7.5	7.4	1737.0	250	228	181	117	15	3	15	201	1	3	108	164	207	71	45	164	178	82	76	3.2	Jahr

Røst.

$\lambda = 12^0\ 4'$ E $= 48^m\ 16^s$ $\varphi = 67^0\ 30'$ N $C_g = 1.95$ mb bei 982 mb

Monat.	Luftdruck. (Normalschwere). Mittel.	Luft-Temperatur. Min.	I	II	III	Mittel.	beobachtetes Max.	Dat.	Min.	Dat.	Absolute Feuchtigkeit. I	II	III	Mittel.	Relat. Feuchtigk. I	II	III	Mittel.	Monat.
Januar	997.3	2.5	4.5	4.6	4.4	4.5	8.0	12	-2.0	19									Januar
Februar	95.5	0.0	1.2	1.9	1.4	1.4	5.4	5	-3.0	21									Februar
März	1006.3	-2.5	-0.8	-0.1	-0.8	-0.8	5.4	3	-8.3	8									März
April	05.7	1.9	3.8	4.6	4.2	3.9	9.2	22	-3.0	2									April
Mai	12.6	4.0	5.8	6.6	6.0	5.7	11.2	30	0.8	1									Mai
Juni	10.4	7.1	8.8	9.2	8.8	8.5	11.0	30	6.3	15									Juni
Juli	12.8	10.3	12.6	13.5	12.8	12.5	19.1	5	6.5	2									Juli
August	07.3	11.2	12.6	13.1	12.4	12.4	17.5	26	9.2	15									August
September	02.3	9.2	10.6	11.3	10.5	10.6	13.7	11	7.7	29									September
Oktober	00.8	2.7	4.1	4.7	4.2	4.2	9.2	1	-0.3	11									Oktober
November	05.2	-0.1	1.5	1.7	1.7	1.6	8.0	13	-4.4	30									November
December	995.8	-2.1	0.0	0.4	0.2	0.2	6.4	8	-7.2	18									December
Jahr	1004.3	3.7	5.4	6.0	5.5	5.4	19.1		-8.3										Jahr

Skomvær.

$\lambda = 11^0\ 54'$ E $= 47^m\ 36^s$ $\varphi = 67^0\ 24'$ N

Januar		2.4	4.7	4.5	4.5	4.6	7.9	12	-1.6	20									Januar
Februar		-0.3	1.3	1.7	1.6	1.4	4.9	3	-4.2	22									Februar
März		-2.6	-0.7	-0.3	-0.6	-0.7	4.9	3	-8.6	7									März
April		2.1	4.1	4.7	4.0	4.0	7.5	14	-2.6	2									April
Mai		4.1	6.0	6.8	6.0	5.8	11.7	29	1.5	22									Mai
Juni		7.4	9.3	9.3	8.7	8.7	11.9	29	5.5	25									Juni
Juli		10.6	13.2	13.5	12.4	12.5	17.7	5	8.3	12									Juli
August		11.3	13.0	13.3	12.3	12.5	16.7	26	9.7	6									August
September		9.3	10.8	11.1	10.3	10.5	12.7	18	7.3	30									September
Oktober		2.4	4.1	4.4	4.5	4.2	9.3	1	-1.1	13									Oktober
November		-0.2	1.6	1.7	1.9	1.7	7.3	12	-5.5	30									November
December		-2.3	0.2	0.2	0.2	0.2	6.3	8	-7.1	18									December
Jahr		3.7	5.6	5.9	5.5	5.4	17.7		-8.6										Jahr

Borgvær.

$\lambda = 13^0\ 48'$ E $= 55^m\ 12^s$ $\varphi = 68^0\ 20'$ N $C_g = 2.05$ mb bei 1000 mb

Januar	996.6	0.7	2.7	3.2	3.1	3.0	8.0	12	-4.5	20	4.6	4.7	4.7	4.7	81	80	82	81	Januar
Februar	96.3	-2.4	-0.5	-0.2	-0.6	-0.5	3.2	3	-7.9	28	3.8	3.8	3.7	3.8	80	80	78	79	Februar
März	1006.5	-5.0	-2.9	-1.7	-2.3	-2.5	3.5	3	12.4	8	3.0	3.0	3.0	3.0	74	71	73	73	März
April	06.2	0.8	2.9	3.9	3.3	3.0	8.0	14	-4.6	2	4.4	4.4	4.4	4.3	76	71	73	76	April
Mai	12.8	3.4	5.8	7.3	6.6	6.0	16.1	30	-1.2	1	5.1	5.3	5.3	5.1	73	68	71	75	Mai
Juni	10.0	7.0	8.9	9.5	9.3	8.7	13.4	30	5.5	3	7.5	7.5	7.4	7.4	87	86	84	84	Juni
Juli	13.0	10.3	13.0	13.9	13.6	12.9	20.8	5	7.0	25	9.2	9.6	9.4	9.3	83	81	81	82	Juli
August	07.7	10.2	12.6	13.9	12.6	12.4	18.7	10	7.3	5	8.9	9.2	8.9	8.9	83	78	84	84	August
September	02.5	7.4	9.6	11.0	9.9	9.8	13.8	3	4.7	21	7.5	7.7	7.8	7.6	84	79	84	84	September
Oktober	00.5	0.3	2.2	2.9	2.1	2.3	7.7	28	-4.7	14	4.4	4.5	4.4	4.4	80	78	81	80	Oktober
November	04.8	-2.3	-0.4	0.2	-0.4	-0.2	7.8	18	-8.7	30	3.7	3.7	3.8	3.7	79	77	81	80	November
December	996.2	-4.0	-2.1	-1.9	-2.3	-2.1	4.8	8	-8.7	18	3.0	3.1	3.0	3.0	72	72	74	73	December
Jahr	1004.4	2.2	4.3	5.2	4.6	4.4	20.8		-12.4		5.4	5.5	5.5	5.4	79	77	79	79	Jahr

Skagen i Bø.

$\lambda = 14^0\ 27'$ E $= 57^m\ 48^s$ $\varphi = 68^0\ 37'$ N

Januar		0.5	2.6	2.9	2.9	2.8	7.4	21	-3.6	20	4.7	4.8	4.8	4.8	83	82	82	83	Januar
Februar		-2.5	-1.4	-0.3	-0.8	-0.9	3.6	3	-8.4	21	3.6	3.7	3.6	3.6	82	78	79	80	Februar
März		-6.2	-3.8	-1.1	-2.6	-2.8	3.9	18	-12.3	8	2.9	3.0	3.0	3.0	77	68	72	74	März
April		0.3	3.0	4.3	3.7	3.2	9.0	14	-4.9	2	4.6	4.6	4.5	4.6	80	73	73	77	April
Mai		2.8	6.2	7.8	7.0	6.2	18.0	30	-2.9	1	5.2	5.4	5.5	5.3	73	67	72	76	Mai
Juni		7.5	9.6	10.7	9.8	9.5	16.1	17	6.2	3	7.9	8.0	7.6	7.7	88	84	83	87	Juni
Juli		10.9	13.8	15.5	14.7	13.2	25.8	5	6.8	25	9.9	10.2	9.8	9.9	85	79	79	83	Juli
August		10.6	13.6	15.7	14.2	13.7	20.1	2	7.3	21	9.6	9.8	9.6	9.6	83	75	81	83	August
September		7.4	9.8	11.7	10.6	10.2	16.3	6	3.2	11	8.0	8.0	8.0	7.9	87	79	84	85	September
Oktober		-0.6	1.6	2.8	1.6	1.8	8.2	1	-8.1	14	4.4	4.6	4.4	4.5	83	79	84	83	Oktober
November		-2.9	-0.8	-0.2	-0.7	-0.6	7.8	13	-11.8	30	3.9	3.9	3.9	3.9	84	81	84	84	November
December		-5.0	-2.5	-2.8	-2.6	-2.6	5.2	8	-13.4	19	3.1	3.1	3.1	3.1	75	78	78	77	December
Jahr		1.9	4.3	5.6	4.8	4.5	25.8		-13.4		5.6	5.8	5.6	5.7	82	77	79	81	Jahr

1925.

Røst.

$H = 8\,m$, $H_b = 10.5\,m$ — $h_t = 3.0\,m$ — $h_r = 1.2\,m$

Monat.	Bewölkung. I	II	III	Mittel.	Niederschlag. Summe.	Zahl der Tage mit: Niederschlag.	≥0.1 mm.	≥1.0 mm.	Schnee. ≥0.1 mm.	Hagel.	Nebel.	Heiter.	Trübe.	Gewitter.	Sturm.	Vindverteilung: N	NE	E	SE	S	SW	W	NW	C	Windstärke. Mittel.	Monat.
Januar . . .	8.7	9.6	8.6	9.0	111.4	28	27	17	7	7	0	1	24	0	5	2	0	3	12	19	27	25	5	0	5.8	Januar
Februar . .	7.4	7.0	6.9	7.1	88.2	22	20	18	14	7	0	1	11	0	0	8	12	17	8	14	15	8	2	0	5.0	Februar
März	7.0	6.7	8.1	7.3	70.8	25	23	18	21	5	0	3	14	0	0	4	20	15	8	17	12	8	8	1	4.6	März
April	7.6	7.3	8.2	7.7	67.9	22	19	16	5	0	2	3	18	0	2	6	7	12	16	25	15	3	6	0	4.5	April
Mai	7.3	6.5	7.0	6.9	27.6	19	12	8	1	1	2	0	11	0	0	16	16	15	8	10	12	4	12	0	4.1	Mai
Juni	8.0	8.5	7.8	8.1	75.3	24	18	14	0	0	2	0	18	0	0	26	4	3	7	20	12	8	10	0	3.9	Juni
Juli	7.6	6.9	7.1	7.2	37.7	17	14	9	0	0	6	2	17	1	0	22	10	20	4	20	10	3	4	0	4.0	Juli
August . . .	7.3	7.7	7.4	7.5	66.3	13	12	8	0	0	2	1	18	0	0	32	7	18	8	17	7	2	2	0	4.2	August
September .	7.0	6.9	7.6	7.2	84.9	19	16	13	0	0	1	1	13	0	0	7	13	23	7	16	18	3	0	3	4.2	September
Oktober . .	8.2	8.1	7.2	7.8	74.4	26	21	14	13	7	0	1	17	0	2	10	9	20	7	7	10	13	15	2	4.8	Oktober
November .	8.1	7.9	7.1	7.7	110.8	24	22	21	13	3	0	1	16	0	3	8	8	17	3	14	15	6	11	8	4.5	November
December .	8.8	8.9	7.5	8.4	97.2	30	26	18	20	1	0	0	17	0	1	11	12	21	14	24	2	3	6	0	5.1	December
Jahr	7.8	7.7	7.5	7.7	912.5	269	230	174	94	31	15	14	194	1	13	152	118	184	102	203	155	86	81	14	4.6	Jahr

Skomvær.

$H = 16\,m$ — $h_t = 2.4\,m$ — $h_r = 1.2\,m$

Monat.	Bewölkung. I	II	III	Mittel.	Niederschlag. Summe.	Zahl der Tage mit: Niederschlag.	≥0.1 mm.	≥1.0 mm.	Schnee. ≥0.1 mm.	Hagel.	Nebel.	Heiter.	Trübe.	Gewitter.	Sturm.	Vindverteilung: N	NE	E	SE	S	SW	W	NW	C	Windstärke. Mittel.	Monat.
Januar . . .	9.0	8.7	8.6	8.8	83.2	24	24	23	4	0	0	0	22	1	5	0	0	0	6	5	33	37	12	0	5.3	Januar
Februar . .	7.0	6.6	6.0	6.5	61.7	20	19	19	13	2	0	1	8	0	0	2	19	11	12	7	18	12	3	0	4.1	Februar
März	6.7	6.9	8.2	7.3	53.1	21	21	18	19	2	0	0	14	0	0	2	18	13	8	12	13	17	9	1	4.0	März
April	7.3	7.1	8.1	7.5	56.1	18	17	16	6	0	1	0	13	0	0	6	9	9	9	13	24	12	7	1	3.4	April
Mai	7.7	6.1	7.4	7.1	36.7	17	17	13	2	0	0	0	10	0	0	7	22	11	5	15	16	3	14	0	3.3	Mai
Juni	8.8	8.7	8.0	8.5	72.9	23	23	18	0	0	5	1	20	0	0	14	13	1	1	6	30	11	9	5	3.0	Juni
Juli	7.9	7.2	7.0	7.4	41.0	13	12	11	0	0	4	1	18	1	0	2	27	8	4	2	28	5	4	13	2.4	Juli
August . . .	7.8	7.6	7.7	7.7	48.7	14	14	13	0	0	5	0	18	0	0	10	30	10	7	7	21	3	1	4	2.9	August
September .	6.8	7.5	7.2	7.2	80.1	16	16	14	0	0	0	1	14	0	0	4	8	9	9	8	25	10	3	14	3.0	September
Oktober . .	7.4	7.5	7.0	7.3	68.1	21	21	16	10	0	0	1	14	0	1	12	15	9	15	6	3	12	21	0	4.1	Oktober
November .	7.2	7.7	6.8	7.2	81.0	23	23	22	15	2	0	0	12	1	0	2	15	12	9	3	15	16	14	4	3.6	November
December .	7.8	7.6	7.4	7.6	59.2	18	18	15	11	0	0	0	17	0	0	6	19	6	22	13	16	5	6	0	4.6	December
Jahr	7.6	7.4	7.4	7.5	741.8	228	225	198	80	6	15	5	180	3	6	67	195	99	107	97	242	143	103	42	3.6	Jahr

Borgvær.

$H = 4\,m$, $H_b = 7.5\,m$ — $h_t = 1.4\,m$ — $h_r = 1.5\,m$

Monat.	Bewölkung. I	II	III	Mittel.	Niederschlag. Summe.	Zahl der Tage mit: Niederschlag.	≥0.1 mm.	≥1.0 mm.	Schnee. ≥0.1 mm.	Hagel.	Nebel.	Heiter.	Trübe.	Gewitter.	Sturm.	Vindverteilung: N	NE	E	SE	S	SW	W	NW	C	Windstärke. Mittel.	Monat.
Januar . . .	8.2	8.6	8.8	8.5	170.4	27	27	23	14	2	0	1	23	0	2	3	1	2	11	23	25	18	10	0	4.1	Januar
Februar . .	6.8	6.3	6.3	6.5	71.1	22	21	14	20	4	0	3	11	0	0	2	13	8	14	22	18	3	3	1	3.1	Februar
März	5.8	6.6	6.9	6.4	54.7	21	20	15	20	1	0	1	8	0	0	6	8	17	13	26	14	8	0	1	3.3	März
April	7.0	6.8	7.0	6.9	65.8	20	18	15	9	0	1	2	13	0	0	6	10	8	13	23	14	8	3	5	2.9	April
Mai	6.4	6.6	6.7	6.6	29.2	18	15	9	4	0	1	2	9	0	0	13	21	6	11	19	5	11	6	1	2.9	Mai
Juni	7.4	7.8	7.9	7.7	71.2	25	21	14	0	0	0	3	21	0	0	28	13	0	2	19	12	8	8	0	2.8	Juni
Juli	6.7	6.1	5.7	6.2	40.1	17	15	10	0	0	4	4	11	1	0	26	22	1	3	17	8	9	5	2	2.9	Juli
August . . .	6.8	6.8	6.5	6.7	26.4	13	9	6	0	0	3	3	15	0	0	25	26	0	5	20	4	6	1	6	2.8	August
September .	6.8	6.4	6.4	6.5	122.6	18	16	13	0	0	0	2	12	0	0	6	17	6	11	20	12	6	0	12	2.6	September
Oktober . .	6.4	6.6	6.8	6.6	119.7	23	22	20	13	0	0	2	13	0	0	6	7	6	9	25	11	9	12	8	3.2	Oktober
November .	6.7	7.2	6.1	6.7	127.9	21	20	17	14	1	0	3	13	0	0	10	5	4	9	38	14	6	3	1	3.5	November
December .	6.6	7.0	6.6	6.7	74.3	21	16	9	13	0	0	3	12	0	0	7	6	10	11	28	19	2	5	5	3.6	December
Jahr	6.8	6.9	6.8	6.8	973.4	246	220	165	107	8	9	29	161	1	2	138	149	68	112	280	156	94	56	42	3.1	Jahr

Skagen i Bø.

$H = 7\,m$ — $h_t = 1.6\,m$ — $h_r = 1.6\,m$

Monat.	Bewölkung. I	II	III	Mittel.	Niederschlag. Summe.	Zahl der Tage mit: Niederschlag.	≥0.1 mm.	≥1.0 mm.	Schnee. ≥0.1 mm.	Hagel.	Nebel.	Heiter.	Trübe.	Gewitter.	Sturm.	Vindverteilung: N	NE	E	SE	S	SW	W	NW	C	Windstärke. Mittel.	Monat.
Januar . . .	8.5	8.8	8.8	8.7	67.3	27	23	23	15	0	0	0	23	0	3	5	1	10	12	14	17	24	10	0	5.1	Januar
Februar . .	7.2	6.9	7.1	7.1	62.1	20	20	17	20	0	0	0	10	0	0	6	13	21	6	18	10	7	3	0	4.5	Februar
März	6.3	6.8	7.1	6.7	38.9	17	17	14	17	2	0	0	8	0	0	6	5	27	12	18	10	11	4	0	4.2	März
April	7.3	7.4	7.2	7.3	38.9	18	18	15	10	0	2	0	14	0	0	7	5	21	17	17	13	8	2	0	3.8	April
Mai	7.4	7.4	7.9	7.6	26.5	18	18	12	4	2	0	1	13	0	0	16	6	24	8	10	11	8	10	0	3.5	Mai
Juni	8.2	8.2	7.8	8.1	62.6	23	21	17	0	0	1	0	20	0	0	18	3	6	1	18	13	13	18	0	3.3	Juni
Juli	7.2	6.8	6.4	6.8	56.8	16	14	12	0	0	1	1	12	0	0	7	6	16	2	6	25	1	30	0	2.7	Juli
August . . .	6.9	6.7	6.9	6.8	29.5	8	7	5	0	0	1	2	10	0	0	19	2	27	2	14	11	0	18	0	2.4	August
September .	7.5	7.6	6.8	7.3	90.6	13	12	12	0	0	0	0	12	0	0	8	0	26	6	16	18	6	10	0	3.3	September
Oktober . .	7.3	7.2	7.4	7.3	109.4	21	20	19	16	3	0	0	15	0	0	18	5	37	3	2	7	7	13	1	3.8	Oktober
November .	7.4	7.3	6.9	7.2	85.8	23	22	17	17	0	0	0	16	0	0	12	1	24	3	15	23	4	8	0	4.0	November
December .	7.3	7.6	7.3	7.4	38.8	16	16	11	13	0	0	0	14	0	0	5	9	36	8	17	9	1	8	0	4.2	December
Jahr	7.4	7.4	7.3	7.4	707.2	220	208	174	112	7	5	4	167	0	3	127	56	275	80	165	167	90	134	1	3.7	Jahr

Andenes.

$\lambda = 16^0\ 8'$ E $= 1^h\ 4^m\ 32^s$ $\varphi = 69^0\ 20'$ N $C_g = 2.05$ mb bei 991 mb

Monat.	Luftdruck. Normalschwere Mittel.	Luft-Temperatur. Min.	I	II	III	Mittel.	beobachtetes Max.	Dat.	Min.	Dat.	Absolute Feuchtigkeit. I	II	III	Mittel.	Relat. Feuchtigk. I	II	III	Mittel.	Monat.
Januar	995.3	0.3	2.2	2.6	2.6	2.5	7.8	12	-4.4	8									Januar
Februar	97.0	-2.5	-0.9	-0.4	-1.1	-0.8	4.0	13	-9.0	24									Februar
März	1007.0	-5.8	-3.1	-2.1	-2.7	-2.9	2.0	20	-12.3	8									März
April	06.4	0.5	2.4	3.9	3.0	2.7	10.0	16	-5.2	2									April
Mai	13.5	3.2	5.0	6.0	5.7	5.1	15.0	30	-0.6	7									Mai
Juni	10.3	7.1	8.6	9.0	8.8	8.4	13.8	21	5.4	29									Juni
Juli	13.6	9.9	12.1	12.6	12.0	11.8	19.5	26	7.4	25									Juli
August	08.7	9.8	11.7	13.0	11.9	11.7	19.2	26	8.0	22									August
September	03.2	8.0	9.4	11.1	9.9	9.8	14.3	3	3.8	20									September
Oktober	00.4	0.3	2.0	2.8	2.2	2.2	8.2	1	-4.9	18									Oktober
November	04.6	-3.0	-0.6	-0.4	-0.6	-0.5	7.8	13	-11.6	29									November
December	997.2	-5.5	-2.4	-2.3	-2.2	-2.3	6.0	8	-12.0	20									December
Jahr	1004.8	1.9	3.9	4.6	4.1	4.0	19.5		-12.3										Jahr

Sand i Senjen.

$\lambda = 16^0\ 40'$ E $= 1^h\ 6^m\ 40^s$ $\varphi = 68^0\ 57'$ N

Januar		-0.6	2.1	2.4	2.4	2.3	8.2	12	-5.3	8									Januar
Februar		-3.1	-1.7	-0.5	-1.2	-1.2	3.7	14	-7.6	20									Februar
März		-5.4	-3.2	-1.6	-2.8	-2.8	3.0	20	-13.3	8									März
April		0.3	3.1	4.7	3.0	3.0	8.9	16	-5.5	29									April
Mai		2.8	6.0	7.6	6.1	5.9	17.5	30	-1.8	1									Mai
Juni		7.6	10.0	10.7	9.6	9.6	14.4	21	5.4	28									Juni
Juli		10.8	14.6	15.4	14.4	14.0	22.3	15	7.0	25									Juli
August		10.3	13.5	15.0	13.1	13.2	19.7	10	8.1	21									August
September		7.4	9.7	11.5	9.6	9.9	15.0	4	3.8	20									September
Oktober		-0.2	2.0	2.6	2.0	2.0	9.3	1	-5.6	30									Oktober
November		-3.2	-1.0	-0.8	-1.1	-1.0	6.8	18	-12.7	30									November
December		-5.2	-3.0	-2.8	-2.9	-2.9	5.7	8	-11.4	18									December
Jahr		1.8	4.3	5.4	4.4	4.3	22.3		-13.3										Jahr

Sommerøy i Senjen.

$\lambda = 18^0\ 3'$ E $= 1^h\ 12^m\ 12^s$ $\varphi = 69^0\ 37'$ N

Januar		-0.7	2.1	2.0	2.1	2.1	9.2	12	-5.7	20	3.6	3.5	3.5	3.5	64	65	62	63	Januar
Februar		-3.1	-1.2	-0.7	-1.2	-1.1	4.5	14	-7.1	22	2.7	2.7	2.7	2.7	61	58	60	60	Februar
März		-5.5	-3.8	-2.4	-3.0	-3.3	3.2	18	-12.5	7	2.3	2.4	2.3	2.3	60	58	57	58	März
April		0.1	2.4	4.3	2.8	2.7	9.0	16	-6.4	1	3.7	3.4	3.2	3.4	65	52	56	63	April
Mai		2.5	5.3	6.9	5.7	5.3	16.6	30	-2.8	7	3.9	3.8	3.9	3.8	58	50	56	61	Mai
Juni		7.3	9.8	10.2	9.5	9.3	14.5	17	4.6	28	6.6	6.8	6.3	6.5	72	73	70	70	Juni
Juli		10.0	13.0	14.6	12.8	12.8	21.5	7	4.8	26	8.5	8.4	7.7	8.1	76	68	70	76	Juli
August		9.2	12.4	14.0	12.1	12.1	19.5	10	5.5	23	8.2	8.0	8.1	8.0	77	67	78	78	August
September		7.2	9.3	11.2	9.5	9.6	15.0	3	3.2	24	6.4	6.3	6.3	6.2	72	64	70	71	September
Oktober		0.2	1.9	2.5	1.9	2.0	8.4	1	-3.7	16	3.6	3.6	3.6	3.6	67	63	66	66	Oktober
November		-2.7	-0.9	-0.5	-1.0	-0.8	8.0	13	-10.1	30	3.2	3.0	3.1	3.1	69	65	67	68	November
December		-5.2	-3.2	-2.8	-3.0	-3.0	6.2	9	-11.2	18	2.7	2.8	2.7	2.7	68	69	67	67	December
Jahr		1.6	3.9	4.9	4.0	4.0	21.5		-12.5		4.6	4.6	4.4	4.5	67	63	65	67	Jahr

Tromsø.

$\lambda = 18^0\ 58'$ E $= 1^h\ 15^m\ 52^s$ $\varphi = 69^0\ 39'$ N $C_g = 1.95$ mb bei 983 mb

Januar	991.3	-1.8	0.4	0.6	0.5	0.5	6.8	12	-8.6	9	3.9	3.9	3.8	3.9	77	75	75	76	Januar
Februar	93.4	-5.2	-3.0	-2.1	-3.2	-2.9	3.2	14	-12.0	27	2.9	3.1	2.9	3.0	73	72	72	72	Februar
März	1003.3	-7.3	-4.6	-3.0	-4.6	-4.5	1.7	3	-13.1	16	2.3	2.7	2.6	2.5	64	66	72	68	März
April	02.3	-0.6	2.2	3.8	1.8	2.0	9.2	17	-5.2	5	4.0	4.0	3.8	3.9	72	64	71	74	April
Mai	09.0	2.3	5.5	7.1	5.4	5.3	18.5	30	-2.6	7	4.3	4.5	4.6	4.4	62	58	68	70	Mai
Juni	05.6	7.2	10.6	11.7	10.3	10.1	16.5	20	4.6	6	6.9	6.8	6.8	6.7	73	67	73	78	Juni
Juli	09.5	9.4	13.6	15.7	13.3	13.2	20.3	6	3.7	26	8.7	9.1	8.7	8.7	75	68	77	80	Juli
August	04.8	8.3	12.1	14.8	12.1	12.1	18.5	26	4.5	22	8.4	8.6	8.0	8.2	80	69	76	79	August
September	999.2	5.6	8.3	10.4	8.0	8.4	14.7	4	0.6	20	6.8	7.0	6.8	6.8	83	75	84	83	September
Oktober	96.0	-2.5	-0.7	0.4	-0.7	-0.5	8.0	1	-8.6	23	3.7	4.1	3.9	3.9	79	81	83	81	Oktober
November	1000.5	-4.7	-2.6	-2.7	-3.2	-2.8	5.1	13	-14.2	29	3.0	3.1	3.1	3.1	73	76	77	75	November
December	993.8	-7.0	-4.9	-4.8	-4.9	-4.9	5.1	8	-14.1	18	2.4	2.6	2.7	2.6	69	74	76	72	December
Jahr	1000.7	0.3	3.1	4.3	2.9	3.0	20.3		-14.2		4.8	5.0	4.8	4.8	73	70	75	76	Jahr

1925.

Andenes.

$H = 5\,m$, $H_b = 7.0\,m$ — $h_t = 1.3\,m$ — $h_r = 1.5\,m$

Monat.	Bewölkung. I	II	III	Mittel.	Niederschlag. Summe.	Zahl der Tage mit Niederschlag.	≥0.1 mm.	≥1.0 mm.	Schnee. ≥0.1 mm.	Hagel.	Nebel.	Heiter.	Trübe.	Gewitter.	Sturm.	Windverteilung. N	NE	E	SE	S	SW	W	NW	C	Windstärke. Mittel.	Monat.
Januar . . .	6.4	7.7	7.6	7.2	68.1	23	23	20	10	0	0	3	19	0	3	0	2	0	10	23	26	22	9	1	4.7	Januar
Februar . .	5.7	5.9	5.5	5.7	50.3	20	20	13	18	2	0	6	8	0	0	6	9	4	13	17	24	9	1	1	3.7	Februar
März	5.9	6.1	6.4	6.1	35.3	15	15	10	15	0	2	4	13	0	0	5	6	13	14	16	24	11	3	1	3.7	März
April	6.8	6.3	6.3	6.5	49.3	19	19	13	11	0	0	6	13	0	0	2	17	7	10	18	17	10	5	4	3.0	April
Mai	6.8	6.5	6.6	6.6	39.3	16	16	12	7	0	0	5	15	0	0	6	25	9	3	14	8	16	11	1	3.1	Mai
Juni	7.7	7.2	6.6	7.2	55.3	22	20	12	0	0	8	2	19	0	0	15	19	1	1	12	11	21	7	3	2.9	Juni
Juli	7.1	6.6	5.6	6.4	36.6	14	13	11	0	0	7	4	12	0	0	12	23	3	9	9	5	26	3	3	2.7	Juli
August . . .	5.8	5.3	6.0	5.7	36.8	8	7	5	0	0	4	7	11	0	0	5	36	0	6	13	4	8	2	19	2.2	August
September .	7.3	6.7	5.5	6.5	70.4	16	14	11	0	0	2	3	12	0	0	2	15	11	10	10	17	12	3	10	2.5	September
Oktober . .	6.8	6.8	5.7	6.4	106.3	24	24	20	16	2	0	3	11	0	0	8	7	7	10	12	24	9	14	2	3.5	Oktober
November .	7.7	7.0	6.4	7.0	146.3	26	25	20	20	1	0	1	10	0	0	4	7	4	5	17	33	6	11	3	3.4	November
December .	6.2	6.7	5.8	6.2	56.7	19	19	15	17	0	0	7	14	0	1	4	12	11	13	24	19	3	5	2	3.5	December
Jahr	6.7	6.6	6.2	6.5	750.7	222	215	162	114	5	23	51	157	0	4	69	178	70	104	185	212	153	74	50	3.2	Jahr

Sand i Senjen.

$H = 17\,m$ — $h_t = 2.4\,m$ — $h_r = 1.6\,m$

Monat.	I	II	III	Mittel.	Niederschlag. Summe.	Niederschlag.	≥0.1 mm.	≥1.0 mm.	Schnee. ≥0.1 mm.	Hagel.	Nebel.	Heiter.	Trübe.	Gewitter.	Sturm.	N	NE	E	SE	S	SW	W	NW	C	Windstärke. Mittel.	Monat.
Januar . . .	8.2	8.2	8.6	8.3	141.6	26	24	15	13	1	0	0	22	1	6	1	1	7	21	22	20	13	8	0	5.5	Januar
Februar . .	5.8	6.7	4.7	5.7	33.5	19	13	10	12	0	0	5	10	0	0	2	6	8	22	23	8	5	6	4	4.2	Februar
März	6.9	6.8	6.3	6.7	39.6	15	13	8	13	1	0	4	14	0	0	8	8	11	24	22	12	5	3	0	4.6	März
April	7.0	7.4	7.5	7.3	34.3	19	16	8	12	1	1	2	15	0	1	5	7	10	25	17	9	7	9	1	4.1	April
Mai	7.8	8.4	8.0	8.1	15.5	19	13	6	6	0	0	1	20	0	0	10	10	15	13	14	5	5	19	2	3.8	Mai
Juni	7.8	7.7	7.2	7.6	34.1	19	15	6	0	0	3	3	20	0	0	18	2	3	4	23	4	3	29	4	3.6	Juni
Juli	7.1	6.7	6.4	6.7	49.6	16	15	9	0	0	7	3	12	3	0	15	5	6	9	12	3	5	30	8	3.3	Juli
August . . .	7.3	7.1	6.6	7.0	25.5	12	10	5	0	0	4	6	18	0	0	19	6	4	18	11	1	1	24	9	2.2	August
September .	7.9	6.6	6.3	6.9	45.6	19	11	7	0	0	1	3	15	0	0	4	4	11	15	13	18	0	12	13	2.4	September
Oktober . .	8.3	7.9	7.0	7.7	114.2	20	17	17	14	5	0	3	19	0	3	6	7	20	9	15	9	19	8	0	3.7	Oktober
November .	7.3	7.8	7.4	7.5	94.3	19	14	10	12	2	0	2	18	0	2	1	8	12	6	34	23	4	2	0	4.1	November
December .	7.4	6.9	6.8	7.0	30.9	15	11	8	10	1	0	4	17	0	0	2	13	12	15	32	8	5	6	0	4.6	December
Jahr	7.4	7.4	6.9	7.2	658.7	218	172	109	92	11	16	36	200	4	12	91	77	119	181	238	120	72	156	41	3.8	Jahr

Sommerøy i Senjen.

$H = 2\,m$ — $h_t = 2.0\,m$ — $h_r = 1.6\,m$

Monat.	I	II	III	Mittel.	Niederschlag. Summe.	Niederschlag.	≥0.1 mm.	≥1.0 mm.	Schnee. ≥0.1 mm.	Hagel.	Nebel.	Heiter.	Trübe.	Gewitter.	Sturm.	N	NE	E	SE	S	SW	W	NW	C	Windstärke. Mittel.	Monat.
Januar . . .	7.1	8.4	8.3	7.9	75.7	24	22	17	12	3	0	2	19	0	3	0	0	0	24	34	3	24	8	0	4.9	Januar
Februar . .	7.2	7.3	5.7	6.7	49.2	17	16	12	15	2	0	3	11	0	0	4	3	6	27	37	5	1	1	0	3.8	Februar
März	7.7	6.9	6.9	7.2	28.8	16	11	8	11	0	0	3	13	0	1	4	1	11	26	42	3	1	4	1	4.2	März
April	8.4	7.4	7.3	7.7	37.0	22	15	12	8	4	0	1	14	0	0	10	2	11	19	25	5	5	6	7	3.2	April
Mai	7.9	7.7	8.1	7.9	32.0	25	17	12	0	4	0	2	20	0	0	17	3	11	12	16	2	16	9	7	2.7	Mai
Juni	7.9	8.2	7.1	7.7	38.4	21	19	10	0	0	1	2	17	0	0	34	1	3	6	11	3	17	10	5	3.0	Juni
Juli	7.0	7.1	7.0	7.0	51.3	19	16	11	0	0	2	3	14	1	0	35	5	3	3	6	7	15	8	11	2.4	Juli
August . . .	6.6	6.6	7.0	6.7	22.1	10	6	4	0	0	0	4	16	0	0	32	1	2	7	9	5	8	1	28	1.6	August
September .	7.5	6.9	6.8	7.1	73.1	18	14	10	0	0	0	3	15	0	0	11	1	3	16	25	3	7	4	20	2.5	September
Oktober . .	7.6	7.6	6.4	7.2	144.1	23	21	20	16	10	0	4	18	0	0	10	4	5	10	43	1	10	9	1	3.6	Oktober
November .	8.1	8.2	7.4	7.9	93.8	23	20	13	15	3	0	2	20	0	0	2	5	1	14	55	3	7	3	0	3.9	November
December .	7.6	7.9	6.1	7.2	18.5	17	11	6	9	2	0	1	13	0	0	1	6	6	25	47	0	2	3	3	3.9	December
Jahr	7.6	7.5	7.0	7.4	664.0	235	188	135	95	28	3	30	190	1	4	160	32	62	189	350	40	113	66	83	3.3	Jahr

Tromsø.

$H = 38\,m$, $H_b = 44.8\,m$ — $h_t = 6.0\,m$ — $h_r = 1.5\,m$

Monat.	I	II	III	Mittel.	Niederschlag. Summe.	Niederschlag.	≥0.1 mm.	≥1.0 mm.	Schnee. ≥0.1 mm.	Hagel.	Nebel.	Heiter.	Trübe.	Gewitter.	Sturm.	N	NE	E	SE	S	SW	W	NW	C	Windstärke. Mittel.	Monat.
Januar . . .	7.3	7.3	7.9	7.5	177.0	19	19	18	13	0	0	4	19	0	0	1	0	2	7	4	35	16	3	25	2.2	Januar
Februar . .	5.8	6.5	5.6	6.0	64.7	12	12	11	12	0	0	6	10	0	0	0	1	10	8	0	11	16	8	30	1.5	Februar
März	5.7	6.0	4.9	5.5	54.0	9	9	8	8	0	0	9	11	0	0	1	6	30	5	0	9	19	6	17	1.7	März
April	6.8	6.6	6.6	6.7	57.7	15	15	11	8	0	1	6	16	0	0	8	6	12	0	12	20	11	3	18	1.3	April
Mai	7.6	8.2	7.0	7.6	30.5	10	10	7	7	0	0	4	20	0	0	19	4	3	2	12	19	17	0	17	1.3	Mai
Juni	6.8	7.5	6.6	7.0	42.8	11	11	9	0	0	1	6	18	0	0	26	7	0	1	4	21	4	4	23	1.5	Juni
Juli	5.3	6.1	5.5	5.6	41.6	9	9	7	0	0	0	8	12	2	0	10	10	10	2	21	17	7	2	14	1.6	Juli
August . . .	5.7	5.0	5.6	5.4	11.6	5	5	5	0	0	0	8	12	0	0	18	8	3	0	13	7	4	0	40	1.1	August
September .	7.1	6.8	6.6	6.8	78.6	13	13	11	0	0	0	5	17	0	0	2	0	5	3	10	29	3	1	37	1.1	September
Oktober . .	6.6	6.6	5.5	6.2	172.7	19	18	15	14	0	0	7	13	0	0	2	0	4	0	0	13	13	9	52	0.8	Oktober
November .	7.3	7.8	6.9	7.3	98.0	17	16	14	15	0	0	6	18	0	0	6	0	7	0	3	17	16	12	29	1.5	November
December .	5.9	5.1	5.7	5.6	58.0	9	9	8	7	0	0	9	14	0	0	6	11	24	7	0	7	13	1	24	1.7	December
Jahr	6.5	6.6	6.2	6.4	887.2	148	146	124	84	0	2	78	180	2	0	99	53	110	35	79	205	139	49	326	1.4	Jahr

Tromsø. Geofysisk Institut.

$\lambda = 18^0\ 57'\ E = 1^h\ 15^m\ 48^s$ $\varphi = 69^0\ 39'\ N$ $C_g = 1.95$ mb bei 990 mb

Monat.	Luftdruck. (Normalschwere). Mittel.	Luft-Temperatur. Min.	I	II	III	Mittel.	beobachtetes Max.	Dat.	Min.	Dat.	Absolute Feuchtigkeit. I	II	III	Mittel.	Relat. Feuchtigk. I	II	III	Mittel	Monat.
Januar	982.5	-2.0	0.3	0.5	0.5	0.4	7.3	21	-7.6	9	3.9	3.9	3.8	3.9	80	80	78	79	Januar
Februar . . .	84.6	-4.8	-3.1	-2.4	-3.0	-2.9	3.1	13	-10.0	27	2.9	2.9	2.9	2.9	77	72	75	76	Februar
März	94.3	-7.6	-5.6	-3.8	-4.9	-5.1	1.8	20	-14.7	8	2.3	2.4	2.4	2.4	71	67	69	70	März
April	93.6	-1.2	1.0	2.7	1.6	1.3	9.0	16	-7.4	1	3.8	3.8	3.7	3.8	76	68	71	75	April
Mai	1000.3	1.6	4.1	5.8	4.9	4.3	19.8	30	-3.4	1	4.5	4.4	4.5	4.4	73	64	69	75	Mai
Juni	997.2	7.0	9.3	10.5	10.0	9.3	17.5	22	4.3	28	6.7	6.7	6.4	6.5	76	71	71	76	Juni
Juli	1000.0	10.0	13.0	15.5	14.2	13.4	24.4	7	5.2	26	8.8	9.2	8.9	8.9	78	70	73	78	Juli
August	996.2	9.1	11.5	14.8	13.0	12.3	21.4	10	5.2	21	8.1	8.4	7.9	8.0	80	67	71	77	August
September . .	90.7	6.1	7.7	10.2	8.8	8.5	14.5	4	2.3	20	6.7	7.0	6.7	6.7	84	74	78	80	September
Oktober . . .	87.1	-1.9	-0.2	0.8	0.0	0.1	9.6	1	-6.2	15	4.0	4.0	3.9	4.0	86	81	83	84	Oktober
November . .	91.4	-4.5	-2.7	-2.5	-2.9	-2.7	6.3	13	-14.2	29	3.2	3.2	3.1	3.2	83	82	82	83	November
December . .	84.7	-6.8	-4.8	-4.7	-4.8	-4.8	5.5	9	-13.2	18	2.6	2.7	2.7	2.7	77	77	76	77	December
Jahr	991.9	0.4	2.5	4.0	3.1	2.8	24.4		-14.7		4.9	4.9	4.7	4.8	73	70	75	76	Jahr

Frihetsli.

$\lambda = 19^0\ 43'\ E = 1^h\ 18^m\ 52^s$ $\varphi = 68^0\ 47'\ N$

Januar		-6.7	-2.9	-1.6	-1.9	-2.1	8.2	21	-15.3	11	2.9	3.1	3.1	3.0	71	71	71	71	Januar
Februar . . .		-12.4	-9.0	-6.3	-8.2	-8.0	2.8	14	-22.4	24	1.9	2.1	2.1	2.0	71	64	73	71	Februar
März		-15.6	-10.9	-5.5	-10.1	-9.7	4.9	18	-25.6	11	1.8	1.9	1.8	1.8	69	55	67	67	März
April		-4.0	1.4	3.8	1.0	0.9	9.1	8	-13.2	29	3.2	3.6	3.0	3.3	62	57	59	61	April
Mai		-0.4	5.8	7.3	5.0	4.7	17.0	30	-7.0	1	3.8	4.0	3.8	3.8	54	51	57	58	Mai
Juni		5.1	10.6	13.4	11.2	10.2	18.1	7	1.2	17	5.8	5.9	5.4	5.6	61	52	54	62	Juni
Juli		10.1	18.9	21.3	18.4	17.4	27.0	7	-1.6	26	8.3	8.8	7.9	8.2	52	48	51	53	Juli
August		3.8	12.4	15.5	12.4	11.3	19.3	23	-0.6	22	6.1	7.1	6.1	6.3	57	55	57	58	August
September . .																			September
Oktober . . .		-7.0	-3.8	-1.5	-3.3	-3.3	9.3	1	-19.9	19	2.8	3.0	2.8	2.9	75	68	71	73	Oktober
November . .		-14.5	-10.1	-8.3	-9.9	-9.5	7.2	13	-26.0	30	2.0	2.0	1.9	2.0	74	69	70	72	November
December . .		-15.2	-11.2	-11.1	-11.4	-11.2	4.0	8	-31.9	19	1.6	1.6	1.7	1.6	61	63	61	61	December
Jahr																			Jahr

Loppa.

$\lambda = 21^0\ 27'\ E = 1^h\ 25^m\ 48^s$ $\varphi = 70^0\ 20'\ N$

Januar		-1.7	1.3	1.3	1.4	1.3	7.2	21	-8.2	20									Januar
Februar . . .		-3.3	-1.2	-1.0	-1.6	-1.4	4.0	13	-9.6	28									Februar
März		-6.8	-3.6	-3.0	-3.8	-3.8	2.0	19	-18.0	7									März
April		-0.8	1.8	2.5	1.8	1.5	8.2	16	-5.0	1									April
Mai		1.7	4.8	5.6	4.6	4.4	16.2	30	-2.6	7									Mai
Juni		7.6	9.9	10.0	9.6	9.4	14.7	22	4.6	5									Juni
Juli		10.1	13.2	13.5	12.5	12.5	21.8	21	6.4	26									Juli
August		9.6	12.2	13.0	11.7	11.8	18.0	10	6.3	22									August
September . .		7.1	8.8	9.7	8.4	8.7	13.2	3	2.9	20									September
Oktober . . .		-0.7	1.6	1.7	1.6	1.5	8.0	1	-4.6	20									Oktober
November . .		-2.6	-0.6	-0.6	-0.7	-0.6	6.2	13	-10.0	29									November
December . .		-5.9	-3.5	-3.6	-3.4	-3.5	6.4	9	-11.8	18									December
Jahr		1.2	3.7	4.1	3.5	3.5	21.8		-18.0										Jahr

Haldde.

$\lambda = 22^0\ 56'\ E = 1^h\ 31^m\ 44^s$ $\varphi = 69^0\ 56'\ N$ $C_g = 1.65$ mb bei 915 mb

Januar	888.2	-8.9	-6.4	-5.9	-6.6	-6.3	6.4	23	-14.9	9	2.6	2.6	2.6	2.6	89	87	87	88	Januar
Februar . . .	90.7	-11.0	-9.0	-8.8	-9.4	-9.2	-3.1	13	-17.2	21	2.0	2.0	1.8	1.9	83	81	80	82	Februar
März	99.2	-15.1	-12.5	-12.1	-12.2	-12.6	-3.4	26	-23.2	6	1.5	1.5	1.5	1.5	79	79	79	79	März
April	99.7	-7.8	-5.7	-4.8	-5.6	-5.9	1.7	9	-14.6	25	2.7	2.8	2.6	2.7	88	84	84	86	April
Mai	906.5	-4.6	-2.2	-1.1	-2.2	-2.4	9.8	30	-10.2	1	3.4	3.6	3.3	3.4	84	81	82	84	Mai
Juni	06.0	1.6	3.4	5.0	3.6	3.5	12.7	23	-0.6	21	4.9	5.0	5.0	5.0	85	78	84	90	Juni
Juli	11.1	8.0	11.0	12.9	11.1	11.0	22.3	9	0.3	29	7.4	7.0	7.2	7.1	76	66	74	80	Juli
August	07.5	5.3	7.4	9.0	7.6	7.5	16.0	10	-2.0	21	5.8	6.2	6.2	6.0	77	74	81	80	August
September . .	00.5	1.0	2.1	3.1	2.3	2.3	7.6	1	-3.7	28	4.9	5.2	5.0	4.9	91	89	91	91	September
Oktober . . .	893.1	-6.8	-5.2	-5.3	-5.8	-5.5	6.3	25	-10.3	31	2.8	2.7	2.6	2.7	86	86	87	87	Oktober
November . .	96.0	-10.0	-8.5	-8.6	-8.4	-8.5	0.6	18	-17.7	29	2.2	2.2	2.1	2.2	85	84	83	84	November
December . .	90.4	-14.4	-12.2	-12.0	-11.6	-11.9	2.7	10	-22.5	18	1.7	1.7	1.7	1.7	84	82	82	83	December
Jahr	899.1	-5.2	-3.2	-2.4	-3.1	-3.2	22.3		-23.2		3.5	3.5	3.5	3.5	84	81	83	84	Jahr

1925.

Geofysisk Institut. **Tromsø.**

H = 102 m, H_b = 114.5 m h_t = 3.0 m h_r = 2.0 m

Monat.	Bewölkung. I	II	III	Mittel.	Niederschlag. Summe.	Zahl der Tage mit Niederschlag.	≥ 0.1 mm.	≥ 1.0 mm.	Schnee. ≥ 0.1 mm.	Hagel.	Nebel.	Heiter.	Trübe.	Gewitter.	Sturm.	Windverteilung. N	NE	E	SE	S	SW	W	NW	C	Windstärke Mittel.	Monat.
Januar . . .	6.4	7.4	7.7	7.2	158.6	22	20	19	14	1	0	3	16	0	1	0	2	1	5	48	20	9	5	3	3.4	Januar
Februar . .	5.4	5.9	5.1	5.5	45.6	15	15	11	14	0	0	6	9	0	0	4	4	2	0	36	30	1	4	3	2.6	Februar
März	5.6	5.6	5.4	5.5	40.2	12	12	9	12	1	0	6	8	0	0	4	7	10	1	47	23	0	1	0	3.0	März
April	8.0	6.6	7.2	7.3	46.4	21	16	10	13	3	3	2	14	0	0	5	18	6	6	32	17	4	2	0	2.7	April
Mai	7.7	7.7	7.7	7.7	37.4	23	14	10	9	4	5	3	19	0	0	4	37	4	2	26	10	7	12	1	2.4	Mai
Juni	7.1	8.0	6.3	7.1	51.7	21	16	10	0	0	1	3	13	0	0	8	25	7	2	18	7	7	16	0	2.2	Juni
Juli	7.0	7.1	6.6	6.9	50.1	19	18	9	0	0	6	2	12	3	0	24	30	4	1	7	8	5	11	3	2.5	Juli
August . . .	6.8	6.4	7.1	6.8	16.8	11	10	4	0	0	0	2	14	0	0	16	35	4	1	9	9	5	6	8	2.3	August
September .	8.0	7.5	7.3	7.6	90.1	19	17	12	0	0	0	2	15	1	0	4	23	6	5	27	11	4	6	4	2.7	September
Oktober . .	8.4	7.6	6.4	7.5	144.0	19	19	17	16	2	0	2	17	0	0	7	6	9	5	24	17	10	8	7	2.7	Oktober
November .	8.4	8.6	6.7	7.9	102.5	24	21	15	16	0	0	2	19	0	0	4	8	3	1	31	32	7	2	2	3.4	November
December .	6.9	8.1	6.2	7.1	58.5	16	15	12	13	1	0	2	13	0	0	8	9	6	1	26	29	6	3	5	3.5	December
Jahr	7.1	7.2	6.6	7.0	841.9	222	193	138	107	12	15	35	169	4	1	88	194	62	30	331	213	65	76	36	2.8	Jahr

Frihetsli.

H = 197 m h_t = 1.5 m h_r = 1.3 m

Monat.	I	II	III	Mittel.	Niederschlag. Summe.	Niederschlag.	≥ 0.1 mm.	≥ 1.0 mm.	Schnee. ≥ 0.1 mm.	Hagel.	Nebel.	Heiter.	Trübe.	Gewitter.	Sturm.	N	NE	E	SE	S	SW	W	NW	C	Windstärke Mittel.	Monat.
Januar . . .	7.5	8.3	7.8	7.9	75.9	23	19	15	18	0	0	0	14	0	1	0	0	6	31	2	15	14	5	20	3.1	Januar
Februar . .	6.3	6.2	5.7	6.1	9.6	15	11	4	11	0	0	4	7	0	0	1	1	25	24	1	3	1	1	27	2.2	Februar
März	6.6	6.4	6.3	6.4	7.9	19	14	2	14	0	0	5	13	0	0	0	1	11	37	0	0	15	4	25	2.5	März
April	7.0	6.7	6.4	6.7	9.9	18	15	2	11	0	0	2	12	0	0	0	2	9	41	2	5	14	4	13	3.0	April
Mai	7.6	7.4	7.0	7.3	18.2	19	13	5	7	1	0	2	14	0	0	3	3	8	31	1	4	29	8	6	3.4	Mai
Juni	7.7	7.1	7.2	7.3	38.4	16	14	11	0	0	3	1	15	0	0	0	2	1	30	5	6	35	6	5	3.2	Juni
Juli	3.6	4.1	4.2	4.0	35.1	7	7	6	0	0	2	15	5	2	0	0	0	0	34	34	6	6	0	13	2.7	Juli
August . . .	5.3	5.4	5.4	5.4	31.7	6	6	6	0	0	1	10	12	0	0	0	0	0	75	3	2	5	0	8	3.0	August
September .																										September
Oktober . .	7.5	6.6	7.3	7.1	7.3	16	14	1	11	0	0	2	15	0	0	0	0	6	17	1	5	29	4	31	1.3	Oktober
November .	5.2	5.7	4.7	5.2	5.2	10	9	2	6	0	0	5	6	0	0	0	0	22	3	0	4	6	4	51	0.9	November
December .	6.8	7.1	5.9	6.6	6.1	12	10	3	9	0	0	4	15	0	0	0	0	32	22	5	1	6	0	27	1.5	December
Jahr																										Jahr

Loppa.

H = 10 m h_t = 1.5 m h_r = 1.3 m

Monat.	I	II	III	Mittel.	Niederschlag. Summe.	Niederschlag.	≥ 0.1 mm.	≥ 1.0 mm.	Schnee. ≥ 0.1 mm.	Hagel.	Nebel.	Heiter.	Trübe.	Gewitter.	Sturm.	N	NE	E	SE	S	SW	W	NW	C	Windstärke Mittel.	Monat.
Januar . . .	7.6	7.8	7.2	7.5	133.0	23	22	15	15	2	0	1	17	0	3	0	0	8	17	18	25	16	6	3	4.3	Januar
Februar . .	6.7	6.9	5.9	6.5	46.6	17	15	9	11	1	0	3	12	0	0	7	6	8	21	15	19	1	3	4	3.0	Februar
März	6.9	6.3	5.9	6.4	35.3	13	10	8	10	0	1	4	12	0	0	4	4	16	19	28	15	0	5	2	3.4	März
April	8.0	6.8	7.7	7.5	51.3	21	18	11	12	0	0	0	16	0	0	14	14	11	10	10	17	2	2	10	2.8	April
Mai	8.2	7.6	8.1	8.0	47.8	18	16	13	10	2	0	2	18	0	0	14	21	7	4	7	19	9	1	11	2.5	Mai
Juni	7.6	7.6	7.9	7.7	68.3	19	14	13	0	0	5	2	19	0	0	19	27	2	2	2	11	16	5	6	2.1	Juni
Juli	6.7	7.5	6.9	7.0	55.1	17	14	11	0	0	1	3	16	0	0	14	34	5	1	3	14	10	4	8	2.3	Juli
August . . .	6.3	5.9	6.5	6.2	13.3	8	6	4	0	0	3	5	12	0	0	16	38	9	3	0	3	5	2	17	1.7	August
September .	7.6	7.1	7.4	7.4	64.1	15	14	9	0	0	2	3	19	0	0	6	24	10	6	9	13	4	2	16	2.2	September
Oktober . .	8.1	8.1	6.5	7.6	126.4	23	18	17	15	5	0	1	16	0	0	10	11	9	11	5	17	7	13	10	3.0	Oktober
November .	7.9	8.5	7.1	7.8	144.3	25	21	19	17	5	0	3	19	0	0	6	8	10	6	12	32	9	6	1	3.4	November
December .	7.4	7.6	7.6	7.5	59.9	20	17	15	14	1	0	2	16	0	0	5	8	20	11	19	19	3	3	5	3.5	December
Jahr	7.4	7.3	7.1	7.3	845.4	219	185	144	104	16	12	29	192	0	3	115	195	115	111	128	204	82	52	93	2.8	Jahr

Haldde.

H = 904 m, H_b = 892.8 m h_t = 2.9 m h_r = 5.3 m

Monat.	I	II	III	Mittel.	Niederschlag. Summe.	Niederschlag.	≥ 0.1 mm.	≥ 1.0 mm.	Schnee. ≥ 0.1 mm.	Hagel.	Nebel.	Heiter.	Trübe.	Gewitter.	Sturm.	N	NE	E	SE	S	SW	W	NW	C	Windstärke Mittel.	Monat.
Januar . . .	8.2	8.1	7.0	7.8	405.6	29	25	22	25	0	4	0	18	0	16	0	2	0	8	25	19	23	15	1	7.1	Januar
Februar . .	8.0	7.7	4.8	6.8	72.6	21	19	16	19	0	7	0	10	0	10	4	3	1	6	18	19	18	13	2	5.8	Februar
März	7.3	6.2	5.0	6.2	95.3	22	22	18	22	0	7	3	11	0	8	4	8	3	14	15	8	25	16	0	5.2	März
April	9.1	8.1	8.3	8.5	120.5	25	25	19	25	0	12	0	23	0	8	5	7	0	7	12	11	20	24	4	5.2	April
Mai	7.6	8.2	8.1	8.0	42.3	25	20	14	20	2	7	1	20	0	5	5	3	4	1	8	14	25	28	5	4.4	Mai
Juni	9.3	8.6	8.8	8.9	47.3	22	17	8	4	3	16	0	23	0	0	7	4	1	18	14	9	22	14	1	3.7	Juni
Juli	7.2	7.9	7.6	7.6	36.0	19	12	8	0	0	13	2	17	0	3	6	2	6	6	21	15	25	10	2	4.4	Juli
August . . .	6.7	6.3	7.0	6.7	50.5	19	14	10	0	1	16	5	14	0	3	8	13	5	16	28	7	11	3	2	3.6	August
September .	8.3	8.4	8.2	8.3	59.3	24	17	14	5	0	20	3	21	0	5	2	10	7	14	21	16	10	8	2	5.5	September
Oktober . .	7.6	7.6	6.2	7.1	163.4	20	17	16	17	0	12	4	17	0	6	6	8	2	7	3	9	21	24	13	4.4	Oktober
November .	7.5	7.6	5.0	6.7	111.6	19	18	12	18	0	15	3	11	0	9	10	4	0	3	11	8	30	22	2	5.4	November
December .	6.8	7.7	7.0	7.2	155.0	16	12	11	12	1	15	6	19	0	11	7	11	6	6	23	12	17	11	0	5.9	December
Jahr	7.8	7.7	6.9	7.5	1359.4	261	218	168	167	7	144	27	204	0	84	64	75	35	106	199	147	247	188	34	5.0	Jahr

1925.

Alten.

$\lambda = 23^0\ 15'\ E = 1^h\ 33^m\ 0^s$ $\varphi = 69^0\ 58'\ N$ $C_g = 1.95$ mb bei 985 mb

Monat.	Luftdruck. (Normalschwere). Mittel.	Luft-Temperatur. Min.	I	II	III	Mittel.	beobachtetes Max.	Dat.	Min.	Dat.	Absolute Feuchtigkeit. I	II	III	Mittel.	Relat. Feuchtigk. I	II	III	Mittel.	Monat.
Januar	996.1	-5.2	-1.4	-1.4	-1.3	-1.4	8.7	12	-15.1	7	3.4	3.4	3.4	3.4	78	79	78	78	Januar
Februar	99.7	-10.6	-7.4	-5.6	-6.8	-6.8	5.2	14	-20.8	24	2.3	2.5	2.4	2.4	81	77	80	80	Februar
März	1010.6	-15.0	-10.8	-6.9	-10.3	-9.9	0.6	19	-27.2	7	1.8	2.2	1.9	2.0	85	76	82	83	März
April	07.7	-3.1	0.7	2.7	1.2	0.6	8.4	14	-10.0	5	4.2	4.3	4.0	4.2	84	76	80	84	April
Mai	13.6	0.6	4.4	6.4	5.2	4.3	20.0	30	-5.5	8	4.7	4.8	4.9	4.8	75	67	73	79	Mai
Juni	10.4	7.0	9.5	11.2	10.6	9.7	19.0	22	4.7	20	6.4	6.7	6.6	6.6	73	69	71	74	Juni
Juli	13.1	10.8	14.9	16.6	15.5	14.6	25.5	7	3.2	26	9.0	9.4	9.5	9.2	72	67	72	75	Juli
August	10.4	8.1	11.5	14.4	12.8	12.0	23.7	26	3.1	22	8.1	8.3	8.3	8.1	80	70	77	80	August
September	04.0	4.9	7.6	10.2	8.3	8.1	14.5	2	-0.9	20	6.5	6.7	6.3	6.4	82	72	76	78	September
Oktober	00.1	-5.6	-2.0	0.0	-2.2	-1.7	11.0	1	-15.1	23	3.6	3.9	3.6	3.7	84	83	85	85	Oktober
November	04.7	-9.3	-5.8	-5.2	-5.5	-5.5	7.7	13	-22.6	30	2.7	2.9	2.7	2.8	84	83	81	82	November
December	00.5	-13.3	-9.5	-9.6	-9.7	-9.6	6.9	8	-25.5	18	2.0	2.0	2.0	2.0	77	78	79	78	December
Jahr	1006.0	-2.6	1.0	2.7	1.5	1.2	25.5		-27.2		4.6	4.8	4.6	4.6	80	75	78	80	Jahr

Ingøy.

$\lambda = 24^0\ 6'\ E = 1^h\ 36^m\ 24^s$ $\varphi = 71^0\ 4'\ N$ $C_g = 2.05$ mb bei 975 mb

Monat.	Luftdruck. Mittel.	Min.	I	II	III	Mittel.	Max.	Dat.	Min.	Dat.	I	II	III	Mittel.	I	II	III	Mittel.	Monat.
Januar	993.2	-1.7	1.0	0.8	0.9	0.9	6.6	12	-8.6	20									Januar
Februar	97.6	-2.4	-0.9	-1.1	-1.5	-1.2	3.9	13	-7.3	22									Februar
März	1009.0	-6.7	-4.1	-3.7	-4.0	-4.1	1.6	19	-12.5	8									März
April	06.7	-2.0	0.5	1.4	0.7	0.5	6.0	16	-6.8	5									April
Mai	13.2	0.8	3.3	4.1	3.3	3.1	12.1	29	-4.1	7									Mai
Juni	10.7	6.1	7.6	8.3	7.7	7.6	13.6	15	4.1	18									Juni
Juli	13.8	8.4	10.8	12.0	10.5	10.6	17.6	16	5.5	25									Juli
August	11.0	7.6	9.7	10.6	9.6	9.6	16.8	28	5.0	21									August
September	04.4	6.4	7.7	8.7	7.6	7.8	11.8	1	3.9	28									September
Oktober	998.6	-0.4	1.9	2.4	1.9	2.0	8.8	1	-3.9	22									Oktober
November	1002.7	-3.2	-0.9	-0.4	-0.6	-0.6	5.8	13	-8.5	29									November
December	998.6	-6.1	-3.8	-3.5	-3.5	-3.6	5.9	9	-11.9	18									December
Jahr	1005.0	0.6	2.7	3.3	2.7	2.7	17.6		-12.5										Jahr

Gjesvær.

$\lambda = 25^0\ 22'\ E = 1^h\ 41^m\ 28^s$ $\varphi = 71^0\ 6'\ N$ $C_g = 2.15$ mb bei 1019 mb

Monat.	Luftdruck. Mittel.	Min.	I	II	III	Mittel.	Max.	Dat.	Min.	Dat.	I	II	III	Mittel.	I	II	III	Mittel.	Monat.
Januar		-1.6	0.2	0.5	0.2	0.3	5.9	22	-6.7	10									Januar
Februar	98.3	-3.9	-2.3	-2.6	-2.8	-2.6	3.4	13	-10.1	21									Februar
März	1009.5	-7.8	-5.3	-4.4	-5.8	-5.4	1.2	19	-12.6	2									März
April	07.0	-2.4	-0.1	1.1	-0.2	-0.1	6.2	17	-8.7	5									April
Mai	13.1	0.3	3.1	4.0	2.6	2.7	12.8	31	-4.8	23									Mai
Juni	11.1	5.8	8.0	8.8	7.5	7.7	14.1	16	3.6	18									Juni
Juli	14.1	9.0	12.6	14.1	12.3	12.3	23.8	11	5.7	26									Juli
August	11.5	7.6	10.3	11.4	10.2	10.1	21.4	10	3.9	7									August
September	05.2	5.5	7.6	8.6	7.5	7.6	15.9	1	1.4	28									September
Oktober	998.8	-1.2	1.2	1.6	1.1	1.2	9.2	1	-3.9	22									Oktober
November	1002.7	-3.6	-1.8	-1.3	-1.5	-1.5	5.5	14	-10.4	29									November
December	999.2	-7.1	-5.0	-4.6	-4.9	-4.8	6.1	8	-11.8	23									December
Jahr		0.0	2.4	3.1	2.2	2.3	23.8		-12.6										Jahr

Kistrand.

$\lambda = 25^0\ 13'\ E = 1^h\ 40^m\ 52^s$ $\varphi = 70^0\ 28'\ N$

Monat.	Luftdruck. Mittel.	Min.	I	II	III	Mittel.	Max.	Dat.	Min.	Dat.	I	II	III	Mittel.	I	II	III	Mittel.	Monat.
Januar		-4.9	-1.4	-1.7	-2.0	-1.7	6.0	22	-16.8	12	3.4	3.5	3.3	3.4	77	81	79	78	Januar
Februar		-7.2	-4.2	-4.0	-4.8	-4.4	2.4	14	-14.0	21	2.6	2.7	2.6	2.6	73	73	72	73	Februar
März		-11.2	-8.0	-6.7	-7.9	-7.8	-0.2	19	-17.5	7	2.1	2.2	2.1	2.1	71	69	72	71	März
April		-2.7	0.2	1.1	-0.2	-0.2	6.5	17	-8.1	5	3.4	3.3	3.4	3.4	70	65	75	75	April
Mai		0.3	3.9	5.1	3.8	3.6	16.0	30	-4.5	7	4.2	4.3	4.3	4.3	68	65	71	73	Mai
Juni		6.3	9.0	10.2	9.0	8.8	15.8	14	4.0	6	6.6	6.7	7.0	6.8	76	72	80	83	Juni
Juli		10.1	13.6	15.1	14.0	13.4	23.5	21	4.2	26	9.0	8.9	8.6	8.7	77	69	73	78	Juli
August		7.4	10.6	12.2	10.3	10.4	21.5	10	2.5	8	7.7	8.1	7.8	7.8	81	76	83	83	August
September		5.0	7.4	8.9	7.2	7.4	13.0	1	-1.0	20	6.6	6.6	6.5	6.5	85	76	84	84	September
Oktober		-2.6	-0.6	0.0	-0.8	-0.6	7.4	1	-9.0	23	3.8	3.6	3.5	3.6	80	76	77	78	Oktober
November		-6.7	-4.1	-3.7	-3.9	-3.9	4.8	13	-15.4	29	2.6	2.8	2.7	2.7	72	75	72	72	November
December		-9.4	-6.8	-6.9	-6.6	-6.8	5.8	8	-16.8	22	2.3	2.3	2.3	2.3	71	73	73	73	December
Jahr		-1.3	1.6	2.5	1.5	1.5	23.5		-17.5		4.5	4.6	4.5	4.5	75	72	76	77	Jahr

1925.

Alten.

$H = 7\,m$, $H_b = 9.8\,m$ — $h_t = 2.4\,m$ — $h_r = 1.9\,m$

Monat.	Bewölkung. I	II	III	Mittel.	Niederschlag. Summe.	Zahl der Tage mit Niederschlag.	≥0.1 mm.	≥1.0 mm.	Schnee. ≥0.1 mm.	Hagel.	Nebel.	Heiter.	Trübe.	Gewitter.	Sturm.	Windverteilung. N	NE	E	SE	S	SW	W	NW	C	Windstärke. Mittel.	Monat.
Januar . . .	7.9	8.2	7.7	7.9	34.7	17	14	6	13	0	0	1	19	0	2	1	0	16	16	12	19	12	5	12	2.7	Januar
Februar . .	7.3	7.2	6.1	6.9	16.0	10	9	6	9	0	0	1	7	0	0	0	2	27	31	6	4	3	0	11	1.9	Februar
März	7.4	6.4	5.6	6.5	12.2	15	12	1	12	0	0	2	11	0	0	0	4	22	31	6	7	1	3	19	1.7	März
April	8.0	7.7	7.6	7.8	15.8	20	13	6	11	1	0	0	16	0	0	2	6	14	11	15	10	9	8	15	2.2	April
Mai	7.4	7.6	7.4	7.5	14.8	17	13	2	10	2	0	0	13	0	0	6	10	3	5	5	15	15	13	21	1.8	Mai
Juni	8.4	7.4	8.0	7.9	30.4	20	15	9	0	0	0	0	19	0	0	10	5	5	7	2	4	14	15	28	1.9	Juni
Juli	5.6	7.1	6.6	6.4	42.2	14	11	5	0	0	0	2	11	4	0	9	6	1	4	7	5	23	14	24	1.9	Juli
August . . .	6.8	6.1	7.0	6.6	29.1	9	8	6	0	0	1	2	13	1	0	4	10	6	6	11	3	4	16	33	1.4	August
September .	7.9	7.5	7.4	7.6	30.0	22	14	10	0	0	0	2	17	0	0	2	7	6	16	14	7	12	4	22	1.6	September
Oktober . .	7.3	7.2	6.8	7.1	25.9	18	16	8	13	0	0	3	15	0	0	5	5	32	18	9	6	10	6	2	2.7	Oktober
November .	7.9	8.0	5.4	7.1	23.2	18	15	8	13	1	0	0	12	0	0	2	5	43	15	4	4	10	2	5	2.3	November
December .	7.6	8.5	6.3	7.5	8.4	14	7	2	7	0	0	2	19	0	0	2	12	32	26	7	2	4	1	7	2.8	December
Jahr	7.5	7.4	6.8	7.2	282.7	194	147	69	88	4	1	15	172	5	2	43	72	207	186	98	86	117	87	199	2.1	Jahr

Ingøy.

$H = 7\,m$, $H_b = 7.5\,m$ — $h_t = 1.3\,m$ — $h_r = 1.4\,m$

Januar . . .	7.1	7.6	6.6	7.1	81.7	22	17	14	8	6	0	2	11	0	4	5	2	4	9	31	7	8	27	0	4.7	Januar
Februar . .	8.7	7.8	5.4	7.3	55.0	20	18	14	15	2	0	1	10	0	0	10	12	3	6	23	17	9	4	0	3.9	Februar
März	7.2	7.0	6.9	7.0	30.3	20	16	12	16	0	0	4	18	0	1	6	5	5	18	32	18	3	6	0	4.4	März
April	8.0	7.6	8.6	8.1	49.4	25	19	15	16	1	0	1	20	0	0	7	16	10	20	6	6	10	13	2	3.9	April
Mai	8.2	7.7	8.4	8.1	34.0	19	18	13	11	0	0	1	19	0	1	12	10	18	11	2	8	19	12	1	3.7	Mai
Juni	7.7	7.1	7.2	7.3	41.4	16	16	9	0	0	0	2	16	0	0	8	19	16	7	3	1	12	20	4	3.3	Juni
Juli	7.6	6.6	7.4	7.2	51.8	14	12	10	0	0	0	2	18	0	0	14	28	10	5	4	4	20	8	0	3.5	Juli
August . . .	6.5	7.0	6.8	6.8	11.5	6	3	2	0	0	0	5	16	0	0	10	37	22	11	2	0	6	4	1	3.4	August
September .	7.6	6.4	6.9	7.0	39.7	17	15	8	0	0	0	3	12	0	0	2	17	19	16	18	5	7	6	0	3.9	September
Oktober . .	8.7	7.7	7.4	7.9	82.0	27	24	20	19	7	0	0	16	0	0	16	13	10	6	10	14	8	13	3	4.1	Oktober
November .	8.5	8.6	6.3	7.8	75.6	26	23	16	17	8	0	1	18	0	0	18	6	5	5	18	12	9	15	2	4.4	November
December .	7.7	8.4	6.6	7.6	82.5	22	19	17	17	2	0	3	18	0	0	12	14	9	22	18	8	5	5	0	4.3	December
Jahr	7.8	7.5	7.0	7.4	634.9	234	200	150	119	26	0	25	192	0	6	120	179	131	136	167	100	116	133	13	4.0	Jahr

Gjesvær.

$H = 10\,m$, $H_b = 10.0\,m$ — $h_t = 1.4\,m$ — $h_r = 1.5\,m$

Januar . . .	7.7	7.9	7.4	7.7	78.6	19	18	15	15	0	0	1	17	0	1	4	3	6	10	31	9	9	18	3	4.2	Januar
Februar . .	7.8	7.1	5.8	6.9	42.8	18	17	11	17	1	0	1	13	0	0	14	3	6	22	24	7	5	3	0	3.5	Februar
März	6.0	6.3	6.4	6.2	38.2	19	19	12	19	0	0	6	12	0	0	7	4	13	31	27	0	4	0	7	3.7	März
April	8.3	7.4	8.0	7.9	52.7	22	22	15	16	0	1	4	19	0	0	9	4	12	10	27	5	8	4	11	3.1	April
Mai	8.8	7.9	9.3	8.7	53.9	22	21	16	13	0	0	0	23	0	1	14	8	5	14	12	4	14	11	11	3.1	Mai
Juni	7.8	7.5	8.0	7.8	72.1	18	17	13	0	0	11	1	16	0	0	12	2	17	16	7	0	15	8	13	2.5	Juni
Juli	6.8	5.7	7.2	6.6	36.0	15	15	9	0	0	4	8	14	2	0	20	2	10	11	10	7	17	4	12	2.8	Juli
August . . .	6.4	7.1	7.1	6.9	20.7	6	5	3	0	0	2	6	17	0	0	5	11	32	10	14	1	2	1	17	3.2	August
September .	7.1	6.6	6.7	6.8	57.1	20	18	10	0	0	5	3	14	0	0	3	5	20	14	25	6	6	5	6	3.7	September
Oktober . .	8.1	7.9	6.0	7.3	73.5	28	27	16	21	0	1	1	14	0	0	18	8	12	2	12	13	4	8	16	3.5	Oktober
November .	8.6	8.5	7.4	8.2	72.6	26	26	21	22	2	0	2	19	0	1	16	6	6	3	22	8	5	19	5	4.2	November
December .	7.4	6.9	7.1	7.1	63.5	21	21	15	20	0	0	3	15	0	2	6	14	10	26	9	6	7	5	10	4.6	December
Jahr	7.6	7.2	7.2	7.3	661.7	234	226	156	143	3	24	36	193	2	5	128	70	149	169	220	66	96	86	111	3.5	Jahr

Kistrand.

$H = 11\,m$ — $h_t = 1.8\,m$ — $h_r = 1.5\,m$

Januar . . .	7.9	8.3	7.3	7.8	98.6	21	16	14	11	0	0	0	18	0	0	0	0	0	0	32	26	22	11	2	2.6	Januar
Februar . .	8.1	7.9	6.5	7.5	8.6	12	6	4	6	0	0	0	12	0	0	2	4	0	3	30	28	12	5	0	2.5	Februar
März	6.8	6.5	6.3	6.5	13.4	13	5	2	5	0	0	2	10	0	0	2	1	9	7	35	21	15	3	0	2.6	März
April	8.2	7.8	8.4	8.1	16.7	25	15	7	11	0	0	0	20	0	0	4	8	6	4	20	20	10	11	7	2.1	April
Mai	8.3	8.4	8.2	8.3	10.4	22	11	3	8	0	0	0	17	0	0	11	10	5	3	17	13	9	11	14	1.7	Mai
Juni	8.0	7.8	7.7	7.8	41.5	20	15	12	0	0	0	1	19	0	0	14	19	6	5	9	4	5	11	17	1.3	Juni
Juli	6.7	6.9	7.2	6.9	10.9	15	9	5	0	0	0	1	9	1	0	16	26	3	0	8	7	9	10	14	1.5	Juli
August . . .	6.6	6.9	6.8	6.8	25.0	11	5	4	0	0	0	3	15	0	0	6	36	12	1	18	4	1	1	14	1.2	August
September .	8.0	7.3	7.7	7.7	40.9	21	14	8	0	0	0	3	18	0	0	10	14	7	2	25	12	2	6	12	1.3	September
Oktober . .	7.8	7.7	6.7	7.4	42.5	23	13	9	11	0	0	1	13	0	0	6	6	4	2	10	22	21	16	6	1.9	Oktober
November .	8.2	8.0	6.7	7.6	44.4	22	16	7	15	0	0	0	13	0	0	2	4	2	0	20	17	29	15	1	2.3	November
December .	7.9	7.8	6.9	7.5	32.9	18	13	10	12	0	0	0	14	0	0	0	10	5	1	33	16	22	4	2	2.7	December
Jahr	7.7	7.6	7.2	7.5	385.8	223	138	85	79	0	0	11	178	1	0	73	138	59	28	257	190	157	104	89	2.0	Jahr

Sværholt.

$\lambda = 26^0\ 41'\ E = 1^h\ 46^m\ 44^s$ $\varphi = 70^0\ 57'\ N$

Monat.	Luftdruck. (Normalschwere). Mittel.	Luft-Temperatur. Min.	I	II	III	Mittel.	beobachtetes Max.	Dat.	Min.	Dat.	Absolute Feuchtigkeit. I	II	III	Mittel.	Relat. Feuchtigk. I	II	III	Mittel.	Monat.
Januar		-3.1	-0.2	0.1	-0.5	-0.2	6.5	21	-9.0	10	3.6	3.6	3.6	3.6	75	76	77	76	Januar
Februar		-4.6	-2.4	-2.5	-3.0	-2.6	3.8	13	-10.4	22	3.0	3.0	2.8	2.9	73	73	72	72	Februar
März		-8.9	-5.6	-5.0	-5.6	-5.6	0.8	19	-13.1	7	2.4	2.6	2.4	2.5	74	75	75	75	März
April		-2.8	0.1	0.7	0.0	-0.1	6.7	17	-8.6	5	3.5	3.5	3.5	3.5	74	71	74	75	April
Mai		0.3	2.9	3.4	2.6	2.5	10.3	18	-4.8	7	4.4	4.4	4.4	4.4	76	73	78	80	Mai
Juni		5.4	8.1	8.4	7.4	7.5	13.5	23	2.8	6	6.2	6.6	6.5	6.4	76	79	83	80	Juni
Juli		9.4	13.0	13.7	12.5	12.4	21.5	18	5.0	1	8.2	8.4	8.4	8.2	74	72	78	77	Juli
August		7.7	10.8	11.3	10.2	10.3	20.0	10	3.6	22	7.5	7.6	7.2	7.3	78	76	78	78	August
September		5.7	7.8	8.4	7.3	7.5	15.2	1	0.8	20	6.5	6.6	6.4	6.4	81	79	84	82	September
Oktober		-0.6	1.4	1.5	1.2	1.3	8.5	1	-4.5	24	4.1	4.1	3.9	4.0	78	78	75	76	Oktober
November		-3.6	-1.6	-1.6	-1.5	-1.6	5.5	14	-9.8	29	3.1	3.2	3.3	3.2	70	73	74	72	November
December		-7.1	-4.7	-4.8	-4.7	-4.7	6.1	8	-13.5	21	2.7	2.7	2.7	2.7	76	78	78	77	December
Jahr		-0.2	2.5	2.8	2.2	2.2	21.5		-13.5		4.6	4.7	4.6	4.6	75	75	77	77	Jahr

Mehavn.

$\lambda = 27^0\ 47'\ E = 1^h\ 51^m\ 8^s$ $\varphi = 71^0\ 1'\ N$ $C_g = 2.15$ mb bei 1018 mb

Monat.	Luftdruck.	Min.	I	II	III	Mittel.	Max.	Dat.	Min.	Dat.	I	II	III	Mittel.	I	II	III	Mittel.	Monat.
Januar	994.4	-4.0	-1.0	-1.3	-1.4	-1.2	6.1	21	-12.6	10									Januar
Februar	98.7	-5.6	-3.5	-3.0	-3.5	-3.3	3.1	13	-12.9	22									Februar
März	1010.4	-10.1	-7.1	-5.6	-6.8	-6.7	0.6	19	-15.1	7									März
April	07.5	-3.7	-0.6	0.1	-1.1	-0.9	6.1	17	-9.5	5									April
Mai	13.7	-0.3	2.3	3.1	2.2	2.1	9.3	30	-4.5	28									Mai
Juni	11.8	4.7	7.3	8.1	6.6	6.8	13.0	26	1.3	6									Juni
Juli	14.4	9.2	12.4	13.6	12.0	12.1	23.9	18	5.7	1									Juli
August	11.8	6.9	9.8	11.1	9.2	9.5	21.8	10	2.7	24									August
September	05.8	4.6	6.9	8.2	6.3	6.8	14.9	1	-0.1	11									September
Oktober	998.3	-2.0	0.3	0.6	0.5	0.4	8.6	1	-7.3	31									Oktober
November	1002.3	-4.8	-2.5	-2.6	-2.6	-2.6	4.1	13	-12.0	29									November
December	999.5	-8.5	-5.9	-5.8	-5.6	-5.8	4.7	8	-15.0	17									December
Jahr	1005.7	-1.1	1.5	2.2	1.3	1.4	23.9		-15.1										Jahr

Tana.

$\lambda = 28^0\ 15'\ E = 1^h\ 53^m\ 0^s$ $\varphi = 70^0\ 27'\ N$

Monat.	Luftdruck.	Min.	I	II	III	Mittel.	Max.	Dat.	Min.	Dat.	I	II	III	Mittel.	I	II	III	Mittel.	Monat.
Januar		-8.0	-3.9	-4.4	-4.2	-4.2	7.4	22	-26.5	11	2.9	2.8	3.0	2.9	76	77	80	78	Januar
Februar		-12.1	-8.4	-6.5	-7.9	-7.7	2.2	13	-24.9	21	2.0	2.2	2.2	2.1	72	70	77	74	Februar
März		-17.5	-11.3	-7.7	-11.0	-10.6	-0.3	21	-28.8	7	1.7	2.2	1.7	1.8	73	74	70	72	März
April		-5.1	-0.2	0.9	-1.2	-1.0	7.2	17	-16.0	2	3.8	4.1	3.7	3.9	78	78	83	81	April
Mai		-0.6	3.8	4.5	3.0	3.0	12.5	30	-7.8	9	4.4	4.3	4.2	4.3	72	66	72	76	Mai
Juni		4.8	9.0	10.2	8.1	8.3	15.2	26	0.5	15	6.1	6.2	6.1	6.1	71	68	75	78	Juni
Juli		8.7	15.1	17.0	14.1	14.1	27.8	10	3.7	2	9.3	8.8	8.8	8.9	73	62	74	79	Juli
August		6.3	10.6	13.4	9.8	10.4	22.6	10	-0.6	23	7.7	7.7	7.6	7.6	81	67	84	86	August
September		3.8	6.7	8.7	6.4	6.8	15.0	2	-5.7	21	6.5	6.5	6.2	6.3	88	77	87	87	September
Oktober		-5.8	-2.2	-0.8	-2.7	-2.1	8.5	1	-17.8	23	3.3	3.5	3.2	3.3	79	75	78	78	Oktober
November		-12.4	-9.2	-8.3	-7.4	-8.3	5.0	13	-26.2	28	2.0	2.1	2.2	2.1	77	76	74	76	November
December		-15.2	-10.9	-10.1	-10.4	-10.5	2.8	8	-28.1	17	1.7	2.0	2.1	1.9	74	79	86	80	December
Jahr		-4.4	-0.1	1.4	-0.3	-0.2	27.8		-28.8		4.3	4.4	4.2	4.3	76	72	78	79	Jahr

Vardø.

$\lambda = 31^0\ 8'\ E = 2^h\ 4^m\ 32^s$ $\varphi = 70^0\ 22'\ N$ $C_g = 2.05$ mb bei 990 mb

Monat.	Luftdruck.	Min.	I	II	III	Mittel.	Max.	Dat.	Min.	Dat.	I	II	III	Mittel.	I	II	III	Mittel.	Monat.
Januar	995.6	-3.6	-0.9	-1.0	-1.4	-1.1	5.8	21	-10.8	11	3.7	3.6	3.5	3.6	84	84	83	84	Januar
Februar	1000.0	-5.5	-3.5	-3.3	-4.0	-3.6	3.0	13	-12.8	22	2.9	2.9	2.8	2.9	80	78	81	80	Februar
März	11.1	-7.9	-5.6	-4.7	-5.1	-5.3	1.8	31	-12.6	3	2.5	2.6	2.5	2.5	79	77	78	78	März
April	08.1	-3.6	-0.8	0.0	-0.9	-1.0	4.8	17	-9.7	5	3.4	3.4	3.4	3.4	76	75	76	76	April
Mai	14.1	-0.2	2.3	2.8	2.2	2.0	8.0	18	-4.8	7	4.2	4.2	4.2	4.2	76	74	76	77	Mai
Juni	12.4	3.6	5.8	6.5	5.6	5.6	14.0	26	0.8	6	5.6	5.8	5.8	5.7	81	79	85	86	Juni
Juli	15.5	7.8	10.5	10.9	10.0	10.0	18.0	11	4.6	2	7.9	8.0	7.8	7.8	84	82	86	86	Juli
August	12.4	7.4	9.8	10.4	9.5	9.5	15.4	11	4.5	10	7.6	7.6	7.5	7.5	84	81	85	86	August
September	07.0	5.4	7.2	8.0	7.1	7.1	13.0	1	1.7	21	6.8	6.5	6.5	6.5	88	80	86	86	September
Oktober	998.3	-1.0	1.3	1.6	0.9	1.2	7.6	1	-5.8	21	4.1	4.1	4.1	4.1	80	78	81	80	Oktober
November	1003.1	-5.5	-3.1	-2.9	-2.9	-3.0	2.8	13	-12.6	27	3.4	3.4	3.5	3.4	92	91	91	91	November
December	00.1	-7.8	-5.1	-5.0	-5.1	-5.1	2.9	8	-14.8	16	2.8	2.8	2.7	2.8	84	83	82	83	December
Jahr	1006.5	-0.9	1.5	1.9	1.3	1.4	18.0		-14.8		4.6	4.6	4.5	4.5	82	80	82	83	Jahr

1925.

Sværholt.

H = 3 m h_t = 1.6 m h_r = 1.5 m

Monat.	Bewölkung. I	II	III	Mittel.	Niederschlag. Summe.	Zahl der Tage mit Niederschlag.	≥0.1 mm.	≥1.0 mm.	Schnee. ≥0.1 mm.	Hagel.	Nebel.	Heiter.	Trübe.	Gewitter.	Sturm.	Windverteilung. N	NE	E	SE	S	SW	W	NW	C	Windstärke. Mittel.	Monat.
Januar . . .	7.1	7.9	6.5	7.2	97.6	23	22	17	16	4	0	2	13	0	1	10	1	6	12	27	11	15	11	0	4.3	Januar
Februar . .	8.6	7.3	5.4	7.1	43.8	20	18	12	18	1	0	2	11	0	0	10	6	2	13	20	25	3	5	0	3.8	Februar
März	5.6	6.6	5.6	5.9	18.4	22	20	7	20	1	0	4	7	0	0	6	5	10	18	29	14	4	7	0	3.5	März
April	7.9	7.1	8.2	7.7	39.2	29	22	13	20	2	0	2	18	0	0	10	11	3	18	16	18	8	6	0	3.5	April
Mai	8.2	7.9	8.4	8.2	39.1	23	21	12	13	2	0	0	19	0	0	10	8	6	19	14	13	6	17	0	3.2	Mai
Juni	7.8	7.8	6.8	7.5	49.7	17	13	9	0	0	2	2	16	0	0	6	8	14	22	13	7	10	10	0	3.2	Juni
Juli.	6.3	5.5	6.3	6.0	27.2	15	12	8	0	0	3	4	14	1	0	6	10	11	17	7	11	13	18	0	2.7	Juli
August. . .	6.6	6.8	7.3	6.9	23.0	13	9	4	0	0	3	5	16	0	0	6	23	18	19	13	1	2	10	1	2.7	August
September .	7.2	6.5	7.1	6.9	56.6	22	17	12	0	0	2	4	14	0	0	0	12	14	22	21	8	7	6	0	3.6	September
Oktober . .	7.4	7.9	5.4	6.9	69.5	26	23	17	17	12	0	0	11	0	0	18	12	10	7	12	14	7	13	0	3.6	Oktober
November .	8.0	7.9	5.6	7.2	57.8	25	21	13	18	3	0	1	13	0	0	20	8	1	1	23	18	8	11	0	3.9	November
December .	7.0	7.9	6.9	7.3	74.5	21	21	17	20	4	0	1	16	0	0	8	17	7	7	35	10	4	5	0	4.1	December
Jahr	7.3	7.3	6.6	7.1	596.4	256	219	141	142	29	10	27	168	1	1	110	121	102	175	230	150	87	119	1	3.5	Jahr

Mehavn.

H = 4 m, H_b = 8.2 m h_t = 1.3 m h_r = 1.8 m

Monat.	I	II	III	Mittel.	Niederschlag. Summe.	Niederschlag.	≥0.1 mm.	≥1.0 mm.	Schnee. ≥0.1 mm.	Hagel.	Nebel.	Heiter.	Trübe.	Gewitter.	Sturm.	N	NE	E	SE	S	SW	W	NW	C	Windstärke. Mittel.	Monat.
Januar . . .	8.3	7.9	7.7	8.0	171.7	22	21	20	16	2	0	2	20	0	0	10	6	2	3	31	12	8	15	6	3.5	Januar
Februar . .	8.2	8.0	8.0	8.1	50.2	22	18	14	18	0	0	1	17	0	0	8	10	5	3	38	9	6	4	1	3.3	Februar
März	6.6	7.1	7.3	7.0	72.3	23	20	12	20	1	0	3	15	0	1	6	11	9	18	27	13	1	3	5	3.1	März
April	8.6	7.8	8.7	8.4	59.9	27	22	14	17	0	0	0	22	0	0	5	16	3	13	23	8	11	7	4	3.2	April
Mai	8.7	8.7	9.4	8.9	48.8	24	22	13	15	2	0	0	24	0	0	21	8	6	8	17	8	13	10	2	2.2	Mai
Juni	8.1	7.4	7.5	7.7	42.1	15	11	6	0	0	0	2	19	0	0	14	9	22	10	9	4	7	10	5	1.7	Juni
Juli.	6.3	6.2	6.6	6.4	21.3	15	12	7	0	0	2	5	14	0	0	22	14	8	6	9	5	9	13	7	2.0	Juli
August. . .	7.1	7.1	7.6	7.3	19.5	18	13	4	0	0	6	5	21	0	0	9	37	12	1	14	4	4	5	7	2.3	August
September .	7.4	7.3	7.7	7.5	49.2	22	19	13	0	0	1	4	17	0	0	4	18	6	9	30	10	3	6	4	2.6	September
Oktober . .	8.5	8.0	7.7	8.1	73.9	30	28	21	22	2	0	0	18	0	0	12	19	4	1	20	19	8	8	2	2.8	Oktober
November .	8.7	8.8	7.9	8.5	66.3	24	23	20	18	6	0	1	23	0	0	12	9	3	1	27	19	5	13	1	3.7	November
December .	7.8	8.3	7.9	8.0	157.7	24	23	22	22	2	0	1	18	0	0	6	14	8	5	37	6	7	6	4	3.6	December
Jahr	7.9	7.7	7.8	7.8	832.9	266	232	166	148	15	9	24	228	0	1	129	171	88	78	282	117	82	100	48	2.8	Jahr

Tana.

H = 5 m h_t = 1.8 m h_r = 1.7 m

Monat.	I	II	III	Mittel.	Niederschlag. Summe.	Niederschlag.	≥0.1 mm.	≥1.0 mm.	Schnee. ≥0.1 mm.	Hagel.	Nebel.	Heiter.	Trübe.	Gewitter.	Sturm.	N	NE	E	SE	S	SW	W	NW	C	Windstärke. Mittel.	Monat.
Januar . . .	9.1	8.2	7.5	8.3	66.6	22	18	12	17	17	4	0	20	0	2	0	3	6	3	26	26	13	8	8	2.5	Januar
Februar . .	7.2	6.5	7.4	7.0	20.8	21	11	6	11	0	0	3	12	0	0	1	3	1	2	62	2	4	1	8	1.7	Februar
März	5.5	6.3	6.5	6.1	9.6	26	12	3	12	0	1	2	8	0	0	0	3	18	2	46	3	3	7	11	1.6	März
April	8.0	8.4	8.5	8.3	33.8	26	17	14	16	0	0	2	21	0	0	4	14	14	12	0	16	4	15	11	1.9	April
Mai	8.3	8.2	8.6	8.4	9.9	24	14	3	10	2	0	0	20	0	0	4	13	11	15	1	9	9	10	21	1.5	Mai
Juni	7.9	7.2	7.6	7.6	50.7	19	10	7	0	0	0	1	16	0	0	1	31	17	13	5	4	2	3	14	1.6	Juni
Juli.	5.7	5.0	6.0	5.6	40.8	20	17	10	0	0	1	4	7	3	0	2	19	4	7	27	3	11	7	13	2.2	Juli
August. . .	7.5	6.6	7.4	7.2	11.4	11	6	4	0	0	0	2	16	0	0	17	18	8	14	8	4	0	1	23	1.1	August
September .	8.5	7.2	7.7	7.8	54.1	25	19	13	0	0	1	2	19	0	0	4	11	7	10	18	11	3	3	23	1.6	September
Oktober . .	7.2	7.6	6.2	7.0	25.9	25	16	9	14	0	0	3	15	0	0	1	13	1	3	13	20	9	16	17	1.6	Oktober
November .	7.5	7.7	7.0	7.4	30.5	21	17	10	17	0	0	2	17	0	0	0	0	8	25	16	12	9	10	10	1.6	November
December .	8.3	8.4	7.6	8.1	47.8	25	19	13	18	0	0	1	19	0	0	4	8	5	13	19	12	4	2	26	1.5	December
Jahr	7.6	7.3	7.3	7.4	401.9	265	176	104	115	19	7	22	190	3	2	38	136	100	119	241	122	71	83	185	1.7	Jahr

Vardø.

H = 6 m, H_b = 6.8 m h_t = 1.7 m h_r = 1.6 m

Monat.	I	II	III	Mittel.	Niederschlag. Summe.	Niederschlag.	≥0.1 mm.	≥1.0 mm.	Schnee. ≥0.1 mm.	Hagel.	Nebel.	Heiter.	Trübe.	Gewitter.	Sturm.	N	NE	E	SE	S	SW	W	NW	C	Windstärke. Mittel.	Monat.
Januar . . .	8.2	8.0	6.8	7.7	93.6	22	21	17	19	0	0	0	15	0	1	10	5	1	1	10	32	8	11	15	3.8	Januar
Februar . .	7.4	7.7	6.6	7.2	42.2	21	19	16	19	0	0	2	15	0	1	4	6	4	4	21	25	7	11	2	4.1	Februar
März	8.0	8.4	7.7	8.0	76.4	28	24	20	24	1	0	1	19	0	0	6	7	10	17	12	24	8	3	6	3.7	März
April	8.4	8.4	7.9	8.2	61.5	24	21	16	18	0	0	1	20	0	0	10	8	3	13	16	18	12	9	1	3.4	April
Mai	8.6	8.6	9.1	8.8	32.3	24	14	7	11	0	2	0	25	0	0	18	4	2	13	12	10	5	20	9	3.1	Mai
Juni	9.0	8.3	9.1	8.8	58.2	14	9	4	2	0	5	0	23	0	0	16	10	15	23	15	2	2	5	2	2.5	Juni
Juli.	7.5	7.4	7.3	7.4	50.1	17	14	8	0	0	11	3	15	2	0	22	6	6	18	29	2	0	7	3	2.6	Juli
August. . .	7.7	6.9	6.7	7.1	27.6	17	9	5	0	0	3	3	17	0	0	21	13	9	8	28	0	0	1	13	2.0	August
September .	8.9	7.8	8.8	8.5	35.9	22	16	10	0	0	3	0	19	0	0	10	15	7	10	23	11	5	5	4	2.8	September
Oktober . .	8.6	8.1	6.4	7.7	55.6	21	19	14	19	0	0	0	16	0	0	21	17	2	2	9	24	8	8	2	3.5	Oktober
November .	7.2	7.5	6.6	7.1	76.9	21	21	19	20	0	0	1	15	0	0	15	10	5	0	2	19	27	12	0	3.1	November
December .	8.2	8.9	7.7	8.3	110.0	28	28	24	27	0	0	1	18	0	0	3	13	10	4	5	25	23	10	0	4.2	December
Jahr	8.1	8.0	7.6	7.9	720.3	259	215	160	159	1	24	12	217	2	2	156	114	74	113	182	192	105	102	57	3.2	Jahr

Karasjok.

$\lambda = 25^0\ 35'$ E $= 1^h\ 42^m\ 20^s$ $\varphi = 69^0\ 25'$ N $C_g = 1.85$ mb bei 969 mb

Monat.	Luftdruck. (Normalschwere. Mittel.	Luft-Temperatur. Min.	I	II	III	Mittel.	beobachtetes Max.	Dat.	Min.	Dat.	Absolute Feuchtigkeit. I	II	III	Mittel.	Relat. Feuchtigk. I	II	III	Mittel.	Monat.
Januar	982.0	-13.2	-7.1	-6.0	-5.9	-6.3	5.3	20	-29.6	12									Januar
Februar	85.4	-21.9	-16.5	-12.1	-15.2	-14.9	2.1	13	-39.6	24									Februar
März	94.8	-25.0	-16.6	-8.8	-16.0	-15.3	-0.4	21	-36.8	14									März
April	92.3	-7.0	-1.2	1.9	-1.1	-1.5	8.0	14	-24.1	2									April
Mai	98.4	-1.3	3.6	6.6	4.5	3.6	21.0	30	-10.1	9									Mai
Juni	94.9	5.5	9.6	11.7	9.9	9.3	17.5	23	2.1	20									Juni
Juli	98.7	9.5	17.3	20.1	17.3	16.5	28.1	9	0.0	26									Juli
August	95.6	5.0	10.5	15.7	11.1	10.8	22.1	26	-2.1	22									August
September	90.3	1.5	5.9	9.2	6.2	6.2	15.0	4	-6.2	20									September
Oktober	84.4	-9.8	-5.8	-2.0	-5.4	-4.6	8.0	1	-27.5	23									Oktober
November	89.3	-17.0	-12.7	-12.2	-12.6	-12.6	3.0	18	-28.5	27									November
December	85.3	-22.0	-15.7	-15.9	-16.2	-15.9	2.3	8	-37.6	18									December
Jahr	991.0	-6.0	-2.4	0.7	-2.0	-2.1	28.1		-39.6										Jahr

Kautokeino.

$\lambda = 23^0\ 7'$ E $= 1^h\ 32^m\ 28^s$ $\varphi = 68^0\ 59'$ N

Monat.	Luftdruck.	Min.	I	II	III	Mittel.	Max.	Dat.	Min.	Dat.	I	II	III	Mittel.	I	II	III	Mittel.	Monat.
Januar		-11.0	-5.5	-5.9	-6.1	-5.8	3.9	21	-27.1	11									Januar
Februar		-19.6	-15.0	-13.0	-14.2	-14.3	-1.1	13	-35.6	25									Februar
März		-23.2	-16.8	-12.7	-16.0	-16.2	-2.5	19	-35.4	17									März
April		-7.7	-2.7	0.2	-1.4	-2.6	6.1	12	-23.5	2									April
Mai		-1.8	3.0	5.3	3.4	2.6	18.5	30	-10.0	9									Mai
Juni		5.2	9.7	11.7	10.4	9.4	16.3	7	-0.5	6									Juni
Juli		10.2	17.1	19.5	17.4	16.3	27.6	9	0.1	26									Juli
August		5.7	10.7	14.2	11.7	10.8	20.3	10	-2.6	22									August
September		2.6	5.6	8.4	5.5	5.9	12.9	15	-6.5	20									September
Oktober		-8.8	-5.4	-3.0	-5.1	-4.9	7.1	1	-21.2	19									Oktober
November		-16.4	-12.1	-11.0	-11.0	-11.5	2.9	13	-28.1	30									November
December		-19.3	-14.4	-14.2	-14.6	-14.4	1.0	8	-34.7	16									December
Jahr		-7.0	-2.2	0.0	-1.7	-2.1	27.6		-35.6										Jahr

Siccajavre.

$\lambda = 23^0\ 32'$ E $= 1^h\ 34^m\ 8^s$ $\varphi = 68^0\ 45'$ N

Monat.	Luftdruck.	Min.	I	II	III	Mittel.	Max.	Dat.	Min.	Dat.	I	II	III	Mittel.	I	II	III	Mittel.	Monat.
Januar		-10.3	-6.1	-6.4	-6.4	-6.3	3.3	21	-21.5	11	2.4	2.5	2.5	2.5	74	75	75	74	Januar
Februar		-18.6	-13.8	-13.6	-14.3	-14.1	-0.5	13	-35.2	26	1.4	1.4	1.4	1.4	63	64	65	64	Februar
März		-20.8	-14.4	-13.3	-16.4	-15.6	-2.2	31	-33.7	16	1.4	1.5	1.2	1.4	64	62	64	64	März
April		-7.9	-2.6	-0.6	-3.4	-3.4	4.3	11	-22.1	2	2.9	3.1	2.9	3.0	70	67	75	74	April
Mai		-2.8	3.6	4.2	1.3	1.7	16.3	30	-9.7	1	3.5	3.4	3.5	3.5	57	54	69	68	Mai
Juni		4.6	10.0	11.3	8.7	8.8	19.1	23	0.8	6	5.1	5.5	5.7	5.4	55	55	67	66	Juni
Juli		10.6	17.6	19.2	13.8	15.5	26.3	9	-0.6	26	7.5	8.1	8.5	7.9	51	50	72	67	Juli
August		6.0	11.1	13.3	9.8	10.2	18.8	8	-2.4	22	6.8	6.5	7.0	6.7	69	56	76	76	August
September		2.3	6.0	7.5	5.0	5.5	11.6	6	-4.7	20	5.5	5.4	5.6	5.4	78	69	84	80	September
Oktober		-9.3	-5.6	-4.1	-6.5	-5.8	6.6	1	-21.6	19	2.4	2.5	2.5	2.5	74	68	77	75	Oktober
November		-16.6	-11.8	-11.8	-12.2	-12.0	2.3	13	-27.1	30	1.7	1.7	1.7	1.7	71	69	69	70	November
December		-18.6	-14.2	-14.6	-14.6	-14.5	-2.7	8	-33.7	15	1.4	1.4	1.4	1.4	65	64	63	64	December
Jahr		-6.8	-1.7	-0.7	-2.9	-2.5	26.3		-35.2		3.5	3.6	3.7	3.6	66	63	71	70	Jahr

Bjørnøen.

$\lambda = 19^0\ 17'$ E $= 1^h\ 17^m\ 8^s$ $\varphi = 74^0\ 28'$ N $C_g = 2.45$ mb bei 1008 mb

Monat.	Luftdruck.	Min.	I	II	III	Mittel.	Max.	Dat.	Min.	Dat.	I	II	III	Mittel.	I	II	III	Mittel.	Monat.
Januar	985.7	-6.2	-3.2	-2.9	-3.4	-3.2	3.0	15	-13.3	20	3.1	3.1	3.0	3.1	79	80	78	78	Januar
Februar	95.0	-9.7	-7.4	-7.2	-7.4	-7.3	-0.5	13	-17.6	23	2.3	2.4	2.4	2.4	76	78	79	78	Februar
März	1006.9	-6.6	-4.7	-4.3	-4.7	-4.7	-0.1	26	-14.9	11	2.8	2.8	2.8	2.8	79	75	77	78	März
April	05.8	-7.7	-5.2	-4.7	-5.1	-5.3	2.5	15	-18.7	3	2.7	2.7	2.6	2.7	79	74	76	79	April
Mai	10.9	-4.0	-2.0	-1.8	-2.2	-2.3	3.4	28	-11.0	8	2.9	3.0	2.9	2.9	77	77	79	79	Mai
Juni	08.5	1.6	3.1	3.7	3.1	3.0	8.5	30	-0.7	19	5.2	5.4	5.1	5.2	90	90	89	89	Juni
Juli	08.5	4.8	6.5	7.5	7.0	6.6	11.5	18	1.5	7	5.5	5.8	5.7	5.6	76	73	76	78	Juli
August	09.0	3.1	5.1	6.4	5.4	5.2	15.9	26	0.4	4	5.2	5.4	5.4	5.2	79	74	78	79	August
September	02.3	2.5	4.1	4.6	3.8	4.0	8.1	20	-0.8	27	4.8	4.7	4.8	4.7	78	73	79	78	September
Oktober	997.5	-3.5	-1.8	-1.6	-1.7	-1.7	6.6	1	-8.5	22	3.4	3.4	3.4	3.4	78	79	79	79	Oktober
November	99.2	-8.2	-5.3	-5.3	-5.4	-5.3	2.5	17	-14.9	12	2.8	2.8	2.7	2.8	82	83	82	82	November
December	98.8	-10.6	-7.7	-7.7	-7.7	-7.7	0.0	3	-23.0	11	2.5	2.5	2.5	2.5	86	85	85	86	December
Jahr	1002.3	-3.7	-1.5	-1.1	-1.5	-1.6	15.9		-23.0		3.6	3.7	3.6	3.6	80	78	80	80	Jahr

1925.

Karasjok.

$H = 128\,m$, $H_b = 128.7\,m$ — $h_t = 1.6\,m$ — $h_r = 1.5\,m$

Monat.	Bewölkung. I	II	III	Mittel.	Niederschlag. Summe.	Zahl der Tage mit Niederschlag.	≥ 0.1 mm.	≥ 1.0 mm.	Schnee. ≥ 0.1 mm.	Hagel.	Nebel.	Heiter.	Trübe.	Gewitter.	Sturm.	Windverteilung. N	NE	E	SE	S	SW	W	NW	C	Windstärke Mittel.	Monat.
Januar . . .	8.1	7.4	6.5	7.3	19.0	10	10	7	9	0	0	0	14	0	0	4	0	3	1	13	8	16	2	46	1.0	Januar
Februar . .	5.5	5.4	4.9	5.3	14.7	7	7	3	7	0	0	5	6	0	0	0	0	6	1	11	5	3	0	58	0.5	Februar
März	6.5	6.3	5.0	5.9	21.4	8	7	5	7	0	0	3	12	0	0	4	1	12	9	7	5	5	1	49	0.8	März
April	7.0	7.4	7.8	7.4	18.1	10	8	7	7	0	0	1	15	0	0	9	3	1	1	8	5	18	0	45	0.8	April
Mai	7.6	7.0	7.7	7.4	30.3	11	11	5	5	0	0	2	14	0	0	9	8	10	6	8	3	11	8	30	1.1	Mai
Juni	8.8	8.3	7.8	8.3	69.0	11	11	10	0	0	0	0	17	0	0	5	7	5	2	15	3	15	4	34	0.9	Juni
Juli	5.0	6.1	6.1	5.7	50.6	11	7	7	0	0	0	3	7	2	0	2	5	7	2	15	5	9	1	47	0.9	Juli
August . . .	7.0	6.5	7.4	7.0	37.5	7	7	5	0	0	0	2	16	0	0	6	0	3	1	11	1	7	1	63	0.4	August
September .	7.9	7.6	7.6	7.7	56.3	13	13	11	0	0	0	2	16	0	0	0	0	3	3	16	2	5	0	61	0.6	September
Oktober . .	7.0	7.1	4.8	6.3	6.4	2	2	2	2	0	0	2	11	0	0	10	1	1	0	8	1	11	4	57	0.7	Oktober
November .	7.2	5.9	4.5	5.9	13.0	8	8	5	8	0	0	5	9	0	0	0	1	2	0	6	4	4	0	73	0.3	November
December .	7.2	7.4	6.4	7.0	12.5	9	8	6	8	0	0	1	15	0	0	5	3	2	2	3	2	10	1	65	0.7	December
Jahr	7.1	6.9	6.4	6.8	348.8	107	99	73	53	0	0	26	152	2	0	54	29	55	28	121	44	114	22	628	0.7	Jahr

Kautokeino.

$H = 308\,m$ — $h_t = 1.8\,m$ — $h_r = 1.8\,m$

Monat.	Bewölkung. I	II	III	Mittel.	Niederschlag. Summe.	Zahl der Tage mit Niederschlag.	≥ 0.1 mm.	≥ 1.0 mm.	Schnee. ≥ 0.1 mm.	Hagel.	Nebel.	Heiter.	Trübe.	Gewitter.	Sturm.	Windverteilung. N	NE	E	SE	S	SW	W	NW	C	Windstärke Mittel.	Monat.
Januar . . .	8.2	7.4	6.5	7.4	3.3	19	9	1	9	0	1	1	14	0	0	0	0	0	4	30	23	14	6	16	2.3	Januar
Februar . .	7.0	7.0	6.4	6.8	12.4	18	12	4	12	0	6	3	12	0	0	2	1	0	4	22	16	2	6	31	1.7	Februar
März	6.4	6.1	5.7	6.1	9.4	18	13	2	13	0	1	8	12	0	0	12	11	0	6	13	6	4	9	32	1.5	März
April	7.7	7.0	7.0	7.2	13.8	18	11	5	10	0	2	2	14	0	0	8	6	1	2	24	17	16	7	9	2.1	April
Mai	7.0	7.3	6.8	7.0	24.8	16	7	5	5	1	1	2	12	0	0	12	6	1	4	16	14	17	14	9	2.2	Mai
Juni	8.8	7.7	7.7	8.1	69.6	18	18	11	0	1	2	0	18	2	0	18	17	4	3	13	10	7	10	8	2.3	Juni
Juli	5.4	7.0	6.4	6.3	78.6	16	12	10	0	0	0	2	10	5	0	9	6	6	5	20	20	10	1	16	2.1	Juli
August . . .	6.5	6.9	6.6	6.7	72.4	10	10	6	0	0	5	3	14	0	0	10	16	8	4	22	7	3	2	21	1.9	August
September .	8.3	7.8	7.2	7.8	91.0	21	20	15	1	0	2	2	17	0	0	2	9	5	4	24	13	6	5	22	1.6	September
Oktober . .	7.0	6.9	5.5	6.5	4.8	12	7	2	7	0	1	2	11	0	0	14	3	2	3	13	14	17	9	18	2.2	Oktober
November .	7.0	7.0	7.0	7.0	2.3	13	6	1	5	0	1	1	15	0	0	3	1	0	4	19	22	11	5	25	1.5	November
December .	7.9	8.4	7.0	7.8	6.8	22	14	2	13	0	2	3	19	0	0	14	9	0	1	14	26	6	5	18	2.2	December
Jahr	7.3	7.2	6.6	7.1	389.2	201	139	64	75	2	24	29	168	7	0	104	85	27	44	230	188	113	79	225	2.0	Jahr

Siččajavre.

$H = ca.\ 380\,m$ — $h_t = 1.5\,m$ — $h_r = 1.4\,m$

Monat.	Bewölkung. I	II	III	Mittel.	Niederschlag. Summe.	Zahl der Tage mit Niederschlag.	≥ 0.1 mm.	≥ 1.0 mm.	Schnee. ≥ 0.1 mm.	Hagel.	Nebel.	Heiter.	Trübe.	Gewitter.	Sturm.	Windverteilung. N	NE	E	SE	S	SW	W	NW	C	Windstärke Mittel.	Monat.
Januar . . .	6.8	6.6	6.2	6.5	10.1	8	8	5	8	0	0	1	10	0	7	6	1	3	6	46	10	6	9	6	3.9	Januar
Februar . .	5.1	5.2	4.8	5.0	13.9	10	10	5	10	0	0	7	5	0	2	6	2	10	4	37	4	2	0	19	3.0	Februar
März	5.6	4.8	4.2	4.9	6.7	6	6	4	6	0	0	7	6	0	1	6	13	17	12	20	2	7	0	16	3.0	März
April	5.9	6.1	5.7	5.9	11.3	9	9	6	6	0	2	2	8	0	2	15	2	9	4	28	13	8	4	7	3.3	April
Mai	6.4	5.9	6.3	6.2	26.5	7	7	5	4	0	0	2	3	0	1	14	15	15	4	26	11	2	3	3	3.4	Mai
Juni	7.2	6.9	6.9	7.0	51.7	14	14	11	0	1	0	0	9	0	2	15	13	22	6	16	11	1	1	5	4.0	Juni
Juli	5.6	6.3	5.3	5.7	71.9	11	11	9	0	0	0	2	8	4	1	2	10	19	4	22	20	8	2	6	3.8	Juli
August . . .	6.3	5.8	6.1	6.1	43.0	10	10	7	0	0	1	3	11	0	0	0	12	32	2	29	12	3	0	3	3.9	August
September .	7.4	6.8	6.9	7.0	74.6	17	17	15	0	0	1	1	12	0	1	9	5	20	8	32	10	5	0	1	3.7	September
Oktober . .	6.2	6.5	6.2	6.3	4.2	6	5	2	5	0	1	2	7	0	2	16	8	13	5	18	12	11	1	9	3.8	Oktober
November .	6.5	6.7	5.2	6.1	10.8	7	7	4	5	0	0	2	9	0	0	6	4	22	7	24	5	10	3	9	2.1	November
December .	6.7	6.8	5.8	6.4	19.2	11	11	4	11	0	0	4	16	0	2	6	18	17	7	28	3	9	1	4	3.6	December
Jahr	6.3	6.2	5.8	6.1	343.9	116	115	77	55	1	5	33	104	4	21	101	103	199	69	326	113	72	24	88	3.5	Jahr

Bjørnøen.

$H = 38\,m$, $H_b = 40.5\,m$ — $h_t = 1.7\,m$ — $h_r = 2.1\,m$

Monat.	Bewölkung. I	II	III	Mittel.	Niederschlag. Summe.	Zahl der Tage mit Niederschlag.	≥ 0.1 mm.	≥ 1.0 mm.	Schnee. ≥ 0.1 mm.	Hagel.	Nebel.	Heiter.	Trübe.	Gewitter.	Sturm.	Windverteilung. N	NE	E	SE	S	SW	W	NW	C	Windstärke Mittel.	Monat.
Januar . . .	7.3	8.7	7.6	7.9	62.5	23	22	16	19	0	3	0	15	0	5	0	15	15	12	8	18	18	6	1	5.4	Januar
Februar . .	7.8	7.4	7.2	7.5	12.7	9	9	6	9	0	4	0	14	0	0	15	29	11	8	3	7	5	4	2	3.9	Februar
März	8.1	7.8	8.3	8.1	38.6	20	14	7	13	2	4	0	18	0	2	10	23	19	34	2	0	1	0	4	5.5	März
April	8.1	8.1	8.0	8.1	29.5	11	8	5	8	0	8	0	20	0	0	12	23	19	12	9	6	4	5	0	5.2	April
Mai	8.7	9.3	9.4	9.1	32.7	16	15	7	14	1	9	0	24	0	0	14	26	17	13	4	6	5	8	0	4.6	Mai
Juni	9.4	9.6	9.7	9.6	3.7	7	3	1	0	0	22	0	26	0	0	6	14	18	29	4	8	10	1	0	3.1	Juni
Juli	9.5	9.3	9.2	9.3	23.6	11	8	5	0	0	24	0	29	0	0	5	4	4	7	5	18	35	14	1	3.9	Juli
August . . .	9.2	8.2	8.9	8.8	5.3	8	5	3	0	0	25	0	23	0	0	12	8	14	7	18	8	12	14	0	2.7	August
September .	9.6	8.9	9.7	9.4	28.4	9	9	7	0	0	23	0	27	0	1	0	2	37	12	6	14	9	9	1	3.9	September
Oktober . .	8.6	8.5	8.5	8.5	17.5	18	11	4	10	1	1	0	21	0	2	8	20	32	5	5	12	4	7	0	4.7	Oktober
November .	9.3	9.5	8.8	9.2	7.9	24	15	3	15	3	4	0	24	0	3	5	24	18	6	7	8	10	12	0	4.5	November
December .	9.6	9.6	9.6	9.6	5.7	28	13	2	13	2	1	0	29	0	10	6	42	15	14	10	3	3	0	0	6.3	December
Jahr	8.8	8.7	8.7	8.8	268.1	184	132	66	101	9	128	0	270	0	23	93	230	219	159	81	108	116	80	9	4.5	Jahr

Anhang I.

Abweichungen der Monatsmittel vom Normalwert. (1866—95).

Luftdruck. **1925.**

Station	φ	λ	H_b	Januar	Febr.	März	April	Mai	Juni	Juli	Aug.	Septbr.	Oktbr.	Novbr.	Decbr.	Jahr
Oksø	58° 4′	8° 4′	11	+3.3	−11.6	+2.5	−2.7	−1.5	−0.1	+3.1	−0.4	−4.5	−1.9	+1.3	−9.6	−1.8
Skudenes	59 9	5 16	7	+2.9	−12.9	+3.0	−4.0	−3.4	+0.8	+2.6	−0.3	−4.5	−1.5	+2.4	−9.9	−2.0
Oslo	59 55	10 43	25	+0.6	−10.7	+1.6	−2.9	0.0	−0.7	+3.3	−0.7	−4.9	−2.9	+1.5	−9.2	−2.2
Bergen	60 23	5 21	22	+2.5	−12.8	+3.1	−4.0	−3.3	+0.6	+2.7	−0.5	−4.8	−1.6	+2.3	−8.9	−2.0
Dovre	62 5	9 7	644	+0.2	−10.5	+1.4	−3.3	−0.7	−0.3	+3.6	−0.7	−4.9	−2.8	+1.2	−8.3	−2.0
Brønnø	65 28	12 13	16	−2.8	−10.1	+1.5	−4.1	−0.2	−0.7	+3.2	−1.6	−4.7	−3.9	+1.9	−7.7	−2.4
Bodø	67 17	14 24	22	−5.1	−9.0	+1.3	−4.6	+0.1	−1.6	+3.0	−1.6	−4.8	−4.9	+1.1	−6.7	−2.7
Tromsø	69 39	18 58	45	−6.7	−6.5	+3.4	−3.6	+1.1	−2.0	+4.1	+0.2	−3.4	−5.2	+1.0	−4.1	−1.9
Alten	69 58	23 15	10	−8.1	−5.8	+5.4	−3.3	+0.4	−1.9	+3.1	+0.8	−2.6	−6.5	−0.7	−3.7	−1.9
Vardø	70 22	31 8	6	−8.6	−5.2	+6.3	−2.7	+0.1	−0.3	+4.4	+1.6	−0.9	−8.0	−2.0	−4.1	−1.5
Mittel				−2.2	−9.5	+3.0	−3.5	−0.7	−0.6	+3.3	−0.3	−4.0	−3.9	+1.0	−7.1	−2.0

Abweichungen der Monatsmittel vom Normalwert. (1841—90).

Lufttemperatur. **1925.**

Station	φ	λ	H	Januar	Febr.	März	April	Mai	Juni	Juli	Aug.	Septbr.	Oktbr.	Novbr.	Decbr.	Jahr
Oksø	58° 4′	8° 4′	8	+4.4	+3.3	+0.3	+1.4	+0.9	+0.2	+3.1	+1.0	−0.3	−0.5	−1.7	−2.1	+0.8
Torungen	58 24	8 48	10	+4.3	+3.2	+0.3	+1.3	+0.5	+0.4	+3.0	+1.2	−0.1	0.0	−1.5	−2.2	+0.8
Skudenes	59 9	5 16	2	+2.9	+2.8	−0.1	+0.9	+1.7	−0.4	+3.3	+0.4	−1.0	−1.1	−1.2	−1.8	+0.5
Utsire	59 18	4 53	56	+2.8	+2.6	+0.1	+1.0	+2.1	−0.4	+2.9	+0.5	−0.9	−1.0	−0.6	−1.2	+0.7
Oslo	59 55	10 43	23	+4.3	+4.9	+0.4	+1.6	−0.1	+0.2	+3.0	+0.4	−0.3	−0.2	−3.2	−3.7	+0.7
Ullensvang	60 20	6 40	53	+2.0	+2.1	−0.8	+0.3	+1.0	+0.4	+4.1	+0.9	−0.5	−0.7	−1.9	−1.9	+0.4
Bergen	60 23	5 21	20	+2.8	+2.5	−0.3	+1.2	+2.5	+0.4	+3.9	+0.7	−0.6	−1.0	−0.9	−1.5	+0.8
Hellisø	60 45	4 43	19	+2.5	+1.9	−0.2	+1.1	+2.3	−0.4	+2.7	+1.2	−0.8	−1.5	−1.0	−1.4	+0.5
Granheim	61 6	8 58	389	+5.0	+3.1	−1.2	0.0	−0.2	+0.8	+2.7	+0.4	−0.6	−0.8	−1.9	−4.6	+0.2
Dovre	62 5	9 7	642	+3.4	+3.4	−0.9	+1.1	+1.2	+0.1	+3.6	+0.5	−0.4	−1.2	−2.0	−2.2	+0.6
Røros	62 34	11 23	627	+3.7	+4.8	−1.9	+0.4	+1.1	−0.7	+3.6	+0.3	−0.4	−2.2	−2.4	−2.3	+0.3
Ona	62 52	6 33	9	+2.0	+1.1	−1.0	+1.1	+1.4	+0.5	+3.0	+1.8	−0.1	−1.8	−1.6	−1.6	+0.4
Brønnø	65 28	12 13	11	+4.0	+1.5	−1.8	+1.8	+1.7	−0.4	+3.9	+1.8	+0.6	−1.9	−2.3	−1.6	+0.6
Bodø	67 17	14 24	17	+5.1	+1.8	−1.7	+2.1	+1.1	0.0	+3.0	+2.0	+1.5	−2.0	−2.1	−2.3	+0.7
Andenes	69 20	16 8	5	+3.8	+1.6	−1.1	+2.0	+0.6	+0.2	+1.5	+0.7	+1.7	−1.5	−1.1	−1.3	+0.6
Tromsø	69 39	18 58	38	+3.5	+1.0	−1.5	+2.3	+1.5	+1.6	+2.2	+1.5	+1.3	−2.7	−1.7	−2.2	+0.6
Alten	69 58	23 15	7	+6.6	+1.9	−3.6	+2.1	+0.9	+0.9	+2.5	+0.2	+1.1	−2.0	−0.7	−1.9	+0.7
Vardø	70 22	31 8	6	+4.5	+2.6	−0.4	+0.8	+0.6	0.0	+1.4	+0.3	+0.8	−0.3	−0.7	−0.7	+0.8
Mittel				+3.8	+2.6	−0.8	+1.2	+1.2	+0.2	+3.0	+0.9	+0.1	−1.2	−1.6	−2.0	+0.6

Anhang II.

See-Temperatur. **1925.**

Station	φ	λ	Januar	Febr.	März	April	Mai	Juni	Juli	Aug.	Septbr.	Oktbr.	Novbr.	Decbr.	Jahr
Torungen	58° 24′	8° 48′	5.3	4.1	2.2	4.6	9.1	12.2	18.1	17.1	13.7	10.3	6.3	2.9	8.8
Lillehavn	57 59	7 5	6.7	5.2	3.3	5.2	9.6	10.5	16.9	15.3	13.0	10.6	8.0	4.6	9.1
Vibberodden	58 24	6 0	5.0	4.2	2.6	5.1	9.2	10.8	16.8	14.8	12.0	9.5	6.9	3.9	8.4
Utsire	59 18	4 53	6.9	5.9	4.0	5.6	8.8	11.2	16.1	16.4	12.8	10.0	8.0	5.7	9.3
Slotterøy	59 54	5 4	6.9	6.0	4.6	5.1	8.8	10.5	15.0	15.8	12.8	10.8	8.9	6.4	9.3
Hellisø	60 45	4 43	6.9	5.8	4.7	5.4	8.5	10.3	14.4	15.7	12.6	9.9	8.2	6.0	9.0
Runde	62 23	5 38	5.6	4.4	3.8	7.6	11.1	12.8	16.7	16.2	12.7	8.0	5.4	3.3	9.0
Ona	62 52	6 33	6.8	5.4	4.4	5.6	7.7	10.1	13.7	15.1	12.7	9.4	7.3	5.5	8.6
Titran	63 40	8 19	5.0	3.7	3.1	5.9	8.7	11.3	15.0	14.4	11.4	6.7	4.4	2.8	7.7
Nordøerne	64 48	10 33	6.4	4.7	3.8	4.9	7.3	10.2	14.9	14.1	12.6	8.1	6.1	4.0	8.1
Myken	66 46	12 29	6.8	5.4	3.9	5.3	6.4	9.5	13.5	13.5	11.8	8.9	6.4	4.8	8.0
Lødingen	68 25	16 0	2.5	1.2	0.8	2.7	6.0	10.7	13.7	11.8	9.2	4.8	3.7	0.8	6.0
Sørvaagen	67 53	13 1	4.8	1.6	1.2	4.0	6.0	8.9	13.5	13.2	11.1	6.8	4.8	2.7	6.6
Skomvær	67 24	11 54	6.2	4.4	3.1	4.9	5.9	8.8	11.5	12.5	10.2	7.1	5.2	3.9	7.0
Andenes	69 20	16 8	3.6	1.6	0.0	4.1	7.3	10.3	12.8	13.1	11.3	5.8	3.2	0.8	6.3
Loppa	70 20	21 27	4.0	2.8	2.5	3.7	4.6	7.8	10.7	10.4	8.6	6.6	4.5	3.1	5.8
Ingøy	71 4	24 6	3.0	1.6	0.3	2.8	5.0	8.2	10.3	9.6	7.9	5.1	2.7	1.4	5.0
Gjesvær	71 6	25 22	3.5	2.4	2.0	1.8	2.9	5.1	10.4	11.6	9.5	6.9	5.1	3.2	5.4
Sværholt	70 58	26 42	4.4	3.5	2.0	2.8	3.8	6.5	9.7	9.4	7.9	6.2	4.8	3.3	5.4

Anhang III.

BEOBACHTUNGEN AUF SPITZBERGEN UND JAN MAYEN

GREEN HARBOUR IM EISFJORD.

1. MONATS- UND JAHRES-RESUME FÜR DAS JAHR 1924.
2. STÜNDLICHE TEMPERATURREGISTRIERUNGEN, JULI 1924—JUNI 1925.
3. TERMINBEOBACHTUNGEN, JULI 1924—JUNI 1925.

JAN MAYEN.

4. MONATS- UND JAHRES-RESUMÉ FÜR DAS JAHR 1924.
5. TERMINBEOBACHTUNGEN, JULI 1924—JUNI 1925.

1924.

Spitzbergen. Green Harbour.

$\lambda = 14^0\ 14'$ E $= 56^m\ 58^s$ $\varphi = 78^0\ 2'$ N $C_g = 2.45$ mb bei 1019 mb

Monat.	Luftdruck. (Normalschwere.) Mittel.	Luft-Temperatur. Mittel. Min.	I	II	III	Mittel.	beobachtetes Max.	Dat.	Min.	Dat.	Absolute Feuchtigkeit. I	II	III	Mittel.	Relat. Feuchtigk. I	II	III	Mittel.	Monat.
Januar	1005.6	-13.6	-9.9	-10.7	-10.5	-10.4	3.3	8	-30.3	16	2.3	2.2	2.2	2.2	83	83	82	82	Januar
Februar	02.4	-13.2	-10.8	-10.9	-11.3	-11.0	3.7	10	-30.0	19	1.9	2.0	1.9	1.9	74	76	77	75	Februar
März	15.2	-24.9	-21.2	-19.1	-20.2	-20.4	-2.1	29	-32.2	7	0.8	0.9	0.8	0.8	74	72	73	74	März
April	17.6	-15.3	-11.7	-9.4	-10.8	-11.2	-0.8	27	-26.0	5	1.5	1.6	1.6	1.6	72	68	72	73	April
Mai	16.1	-5.8	-2.2	-0.3	-1.4	-2.2	5.3	7	-13.4	6	2.8	2.9	2.8	2.8	72	64	68	74	Mai
Juni	16.1	-0.7	1.2	2.6	1.8	1.4	8.2	30	-7.8	8	3.9	3.9	4.0	3.9	77	70	75	81	Juni
Juli	09.1	5.3	7.2	9.0	7.8	7.5	14.2	8	2.1	1	6.1	6.3	6.0	6.1	81	74	77	81	Juli
August	07.7	3.7	5.3	6.4	5.8	5.4	11.6	8	-1.2	31	5.3	5.2	5.2	5.2	79	73	76	78	August
September	02.3	-0.5	0.8	1.9	1.1	1.0	5.0	12	-6.1	30	4.0	4.1	4.0	4.0	82	78	80	81	September
Oktober	05.2	-5.5	-3.5	-3.3	-3.7	-3.5	4.2	3	-14.8	19	3.2	3.2	3.2	3.2	85	84	86	85	Oktober
November	02.4	-11.0	-8.4	-8.7	-9.1	-8.7	2.6	10	-20.2	30	2.1	2.0	2.0	2.0	74	72	74	74	November
December	996.2	-12.3	-9.2	-8.7	-9.1	-9.0	3.0	23	-22.4	1	2.1	2.1	2.1	2.1	79	76	79	79	December
Jahr	1008.0	-7.8	-5.2	-4.3	-5.0	-5.1	14.2		-32.2		3.0	3.0	3.0	3.0	78	74	77	78	Jahr

Spitzbergen. Green Harbour. **1924.** **Luft-Temperatur.**

$H = 7$ m $\varphi = 78^0\ 2'$ N

$h_t = 1.3$ m **Juli.** $\lambda = 14^0\ 14'$ E

Datum	1a	2a	3a	4a	5a	6a	7a	8a	9a	10a	11a	MT	1p	2p	3p	4p	5p	6p	7p	8p	9p	10p	11p	MN	Mittel
1	3.0	2.7	2.6	**2.1**	2.6	4.1	4.8	5.8	6.8	7.8	8.3	8.4	8.6	**9.0**	7.9	7.4	8.1	8.3	6.4	5.7	6.4	6.1	5.5	5.2	5.98
2	5.0	4.5	4.4	4.3	4.5	5.1	5.3	6.4	8.6	7.2	8.2	**9.1**	7.0	7.2	6.3	6.4	6.5	6.1	4.8	4.4	4.2	4.4	4.4	**4.2**	5.77
3	4.2	3.9	3.9	4.2	4.1	4.1	4.1	**4.7**	4.2	3.0	3.4	3.5	3.5	3.5	3.2	3.3	4.1	3.4	3.5	3.5	3.3	3.1	3.0	**2.9**	3.69
4	2.8	2.9	3.1	2.9	2.7	**2.7**	3.3	3.6	4.0	4.9	4.8	5.8	6.4	7.4	7.4	**7.5**	5.5	4.8	3.8	4.5	5.4	5.5	4.0	3.9	4.57
5	3.7	3.7	3.9	**3.6**	3.6	4.3	4.4	5.6	5.6	7.0	7.4	8.1	8.5	10.6	**10.8**	10.6	9.3	10.0	8.7	8.4	7.9	7.2	7.2	6.2	6.93
6	5.7	5.2	5.6	5.1	**4.9**	5.6	5.6	5.6	5.8	7.7	9.7	10.7	10.1	10.6	**11.1**	10.7	10.3	10.2	8.4	7.9	7.5	6.4	5.7	5.7	7.58
7	6.3	5.8	**5.6**	5.6	6.0	6.6	6.7	7.0	9.0	10.8	12.6	14.2	**14.2**	12.8	12.7	12.4	12.3	10.5	10.2	10.4	10.5	10.1	9.7	9.4	9.64
8	9.3	8.7	8.7	**7.5**	7.7	8.6	9.7	11.0	12.3	13.7	14.2	14.2	**14.4**	14.2	13.2	12.8	13.5	13.7	13.4	12.7	12.1	10.6	10.8	11.1	11.59
9	9.4	**8.3**	8.8	9.2	8.8	9.6	10.7	11.8	12.7	**13.6**	12.7	12.5	11.7	11.8	11.9	11.8	11.6	11.1	11.0	11.3	11.1	10.4	9.6	9.0	10.85
10	8.8	7.9	**7.9**	8.1	8.2	8.3	9.2	10.0	10.6	10.7	12.4	13.7	13.5	13.3	**15.2**	13.0	10.5	9.9	10.0	10.6	9.7	9.5	9.5	8.5	10.38
11	7.6	7.8	8.0	8.3	8.5	9.8	10.6	11.6	11.8	11.7	13.8	14.0	**14.2**	13.8	13.5	12.9	12.0	11.8	11.0	10.0	8.3	9.0	8.1	**5.6**	10.57
12	5.3	4.7	4.7	**4.6**	5.4	5.9	7.0	8.2	8.3	8.5	9.0	9.3	**9.8**	9.0	8.5	7.9	7.8	7.9	7.6	7.2	7.2	6.9	6.5	6.1	7.22
13	6.2	6.2	6.3	6.3	6.8	6.9	6.9	7.4	6.9	7.3	6.2	6.0	7.5	8.4	8.8	**9.0**	8.7	7.5	6.8	7.3	6.5	6.1	5.9	**5.9**	6.99
14	6.1	6.1	6.2	6.1	6.2	6.3	6.5	6.6	7.0	7.0	6.8	6.8	6.8	7.6	7.9	**9.0**	8.8	8.3	8.8	8.0	7.1	6.7	6.2	**6.1**	7.04
15	6.2	6.4	6.5	6.8	6.9	6.9	7.0	7.2	7.2	7.9	8.4	7.8	**8.6**	8.4	8.4	7.7	7.3	6.3	5.5	5.2	**4.2**	4.3	4.3	4.6	6.67
16	**4.7**	4.7	4.9	4.9	5.4	6.0	6.1	6.1	6.1	6.3	7.0	7.3	7.5	**7.6**	7.5	6.9	6.6	6.3	6.2	6.2	6.1	6.1	6.0	5.9	6.18
17	5.7	5.7	5.8	5.8	6.0	6.3	6.4	6.8	7.0	7.6	7.7	8.3	**8.5**	8.2	8.0	7.3	7.2	6.1	6.1	5.5	5.5	4.9	4.5	**4.5**	6.48
18	4.2	**4.2**	4.2	4.2	4.3	4.4	5.2	5.6	6.0	6.9	7.0	7.0	7.5	8.2	8.3	**8.9**	8.1	8.3	8.8	7.1	6.5	6.2	6.0	5.9	6.38
19	5.7	**5.7**	6.1	6.5	6.5	6.4	6.5	6.8	6.8	6.3	6.2	7.4	8.0	**8.1**	7.9	7.7	7.6	7.7	7.4	7.4	7.7	7.5	6.9	6.6	6.98
20	6.4	6.4	6.3	6.0	6.1	6.6	6.8	7.0	7.0	7.0	7.2	7.2	6.3	5.6	5.4	5.3	7.3	6.4	7.3	**7.5**	6.0	5.3	4.8	**4.7**	6.33
21	4.6	**4.3**	4.3	4.5	4.5	4.7	4.8	5.0	5.5	5.9	6.3	6.1	6.3	7.2	7.9	**7.9**	6.2	5.4	5.3	5.2	5.7	5.8	5.6	6.2	5.63
22	4.8	4.8	**4.8**	5.2	5.5	5.8	6.1	6.4	7.1	7.8	8.4	**9.2**	8.7	8.0	7.7	7.6	7.0	7.1	7.4	6.3	5.7	5.6	5.4	5.4	6.58
23	**5.5**	5.5	5.9	6.0	6.5	6.9	6.5	8.0	8.9	8.7	**10.7**	9.6	8.9	7.6	7.3	8.1	8.3	8.3	7.6	7.7	7.4	7.1	7.0	6.5	7.52
24	6.0	6.2	6.3	6.3	6.2	6.2	6.2	7.2	6.9	6.8	8.2	8.4	8.7	8.1	**8.9**	8.3	8.2	7.4	6.7	5.9	5.6	5.6	5.4	**5.2**	6.87
25	5.0	4.8	**4.8**	5.0	5.1	5.3	5.9	7.1	7.6	7.8	8.3	8.4	**8.6**	7.0	6.5	6.6	7.7	7.3	7.0	6.4	6.4	6.2	6.2	6.0	6.54
26	6.1	5.9	4.9	**4.8**	5.1	6.7	7.2	8.0	8.6	9.7	10.0	10.5	**10.9**	9.4	8.7	9.4	8.9	9.2	8.4	7.4	6.5	5.7	5.3	5.2	7.61
27	5.0	5.0	**5.0**	5.1	5.1	5.1	5.2	5.8	6.0	6.3	7.5	8.0	9.4	**9.6**	8.5	6.8	7.3	8.1	7.8	6.8	6.8	6.9	6.7	6.4	6.68
28	6.5	6.4	**6.2**	6.2	6.3	6.3	6.3	6.6	6.4	7.5	9.3	9.5	8.1	8.8	9.6	9.4	9.1	9.4	**10.2**	9.2	8.8	7.9	7.7	7.4	7.88
29	7.1	6.1	5.7	**5.4**	5.6	6.7	8.4	10.0	10.9	10.3	10.8	11.3	11.4	11.8	11.3	11.5	**11.8**	11.4	9.8	8.0	7.5	6.7	**6.2**	6.4	8.84
30	6.4	6.4	6.4	6.0	6.1	6.7	6.8	6.9	7.2	7.1	7.1	7.1	7.2	7.1	7.4	7.1	7.1	**7.8**	7.1	6.9	6.2	6.2	6.0	**5.7**	6.75
31	**5.4**	5.7	5.9	6.0	6.3	6.6	6.7	7.0	7.8	8.2	8.8	9.2	8.8	8.6	9.0	**9.2**	8.4	7.7	7.6	7.0	6.6	6.3	5.9	5.7	7.27
M.	5.76	**5.57**	5.60	5.57	5.73	6.18	6.55	7.19	7.63	8.06	8.66	8.99	**9.00**	8.98	8.93	8.72	8.49	8.18	7.76	7.34	6.98	6.65	6.32	6.07	7.29

JAHRES-RESUMÉ.

1924.

Green Harbour. **Spitzbergen.**

$H = 7$ m, $H_b = 11.4$ m — $h_t = 1.3$ m — $h_r = 3.1$ m

Monat.	Bewölkung. I	II	III	Mittel.	Niederschlag. Summe.	Zahl der Tage mit Niederschlag.	≥ 0.1 mm.	≥ 1.0 mm.	Schnee. ≥ 0.1 mm.	Hagel.	Nebel.	Heiter.	Trübe.	Gewitter.	Sturm.	Windverteilung. N	NE	E	SE	S	SW	W	NW	C	Windstärke Mittel.	Monat.
Januar . . .	7.0	7.1	6.4	6.8	49.5	18	9	9	9	0	1	3	15	0	0	1	0	9	35	29	3	1	6	9	2.7	Januar
Februar . .	7.2	7.3	7.0	7.2	50.2	20	18	13	18	0	0	0	15	0	0	13	6	5	20	31	3	0	2	7	3.5	Februar
März	7.0	7.1	6.0	6.7	22.4	11	9	7	9	0	0	3	15	0	0	9	6	4	44	19	0	2	5	4	2.0	März
April	6.3	6.7	6.9	6.6	16.8	15	8	5	8	0	1	3	10	0	0	11	15	7	29	18	0	2	3	5	3.0	April
Mai	8.6	7.2	7.5	7.8	2.0	15	2	2	2	0	0	1	16	0	0	21	12	4	24	14	2	1	2	13	2.1	Mai
Juni	8.4	7.7	8.2	8.1	7.0	9	4	4	4	0	0	3	21	0	0	12	2	2	26	5	3	12	20	8	2.2	Juni
Juli	7.6	6.5	7.5	7.2	17.4	8	5	4	0	0	1	2	16	0	0	9	2	0	23	23	2	12	20	2	2.3	Juli
August . .	7.9	7.6	7.3	7.6	33.3	14	10	5	1	0	3	2	16	0	0	9	0	1	16	8	13	11	29	6	2.6	August
September	7.5	7.8	7.9	7.7	14.3	12	9	6	6	0	0	2	16	0	0	7	14	4	17	9	1	2	7	29	1.5	September
Oktober . .	8.1	7.7	7.7	7.8	62.0	23	19	11	15	0	2	2	19	0	0	2	9	3	25	11	0	7	5	31	1.8	Oktober
November .	6.8	6.9	5.7	6.5	34.2	16	11	8	10	0	0	6	13	0	0	5	14	6	27	5	0	1	7	25	1.9	November
December .	6.9	7.2	7.2	7.1	52.9	19	16	13	15	0	0	4	13	0	0	4	4	2	30	12	1	5	5	30	2.1	December
Jahr	7.4	7.2	7.1	7.3	362.0	180	120	87	97	0	8	31	185	0	0	103	84	47	316	184	28	56	111	169	2.3	Jahr

ÜBER LUFT-TEMPERATUR.

Spitzbergen. Green Harbour. **1924.** **Luft-Temperatur.**

$H = 7$ m — $\varphi = 78^0\ 2'$ N

$h_t = 1.3$ m — **August.** — $\lambda = 14^0\ 14'$ E

Datum	1a	2a	3a	4a	5a	6a	7	8a	9a	10a	11a	MT	1p	2p	3p	4p	5p	6p	7p	8p	9p	10p	11p	MN	Mittel
1	5.6	5.5	**5.5**	5.6	6.0	6.5	7.3	7.6	8.4	7.9	8.4	**9.0**	7.6	7.6	7.8	7.4	6.5	6.5	6.5	6.4	6.1	6.2	6.7	6.8	6.89
2	6.9	6.4	6.5	6.4	**6.3**	6.4	6.7	7.0	6.5	6.6	7.2	7.9	8.2	8.4	**8.8**	8.2	7.8	7.7	7.8	7.8	8.2	7.5	7.3	7.3	7.32
3	7.3	7.3	7.3	7.2	**7.0**	7.0	7.4	7.3	7.6	7.7	7.9	**8.3**	8.1	8.0	8.1	7.6	7.3	7.1	7.8	8.0	7.7	7.2	7.1	7.1	7.52
4	6.7	6.7	6.7	6.7	**7.1**	6.9	6.9	7.0	6.8	6.6	6.0	5.4	5.1	5.0	**4.6**	5.1	4.8	5.0	5.2	4.8	4.7	4.7	4.7	4.6	5.74
5	4.6	4.6	**4.5**	4.5	4.6	4.8	4.8	5.4	5.7	5.5	6.2	7.2	7.1	7.8	8.2	7.1	7.3	8.1	8.4	8.6	**8.8**	8.5	7.5	6.4	6.51
6	5.9	5.5	5.3	**5.0**	5.4	5.8	6.7	7.2	8.7	8.8	11.0	12.2	**12.2**	9.4	9.0	8.8	9.0	8.2	7.8	7.5	7.4	7.6	7.5	7.4	7.89
7	7.5	7.5	7.3	6.9	6.7	**6.3**	6.4	6.6	6.5	6.3	6.4	7.3	7.6	8.8	8.8	8.7	9.0	**9.0**	8.7	8.3	7.7	7.3	7.0	7.0	7.48
8	7.0	7.0	7.0	6.9	6.9	**6.8**	6.9	7.8	7.9	7.9	8.2	8.7	10.7	**11.6**	10.7	9.9	9.6	9.5	9.4	9.4	9.4	8.6	8.6	8.4	8.53
9	**7.7**	7.7	6.8	6.3	6.0	5.5	5.2	5.2	5.1	**4.9**	5.3	5.6	5.6	5.8	5.8	5.8	5.7	5.7	5.4	5.3	5.3	5.3	5.3	5.3	5.73
10	5.3	5.3	5.2	5.2	5.1	5.1	5.1	5.2	5.3	5.5	5.7	**5.8**	4.9	4.4	4.1	4.7	4.4	4.6	4.6	4.7	5.1	5.0	4.6	**4.1**	4.96
11	3.7	3.7	3.4	3.0	**2.8**	3.1	4.5	4.8	4.9	5.4	6.3	6.4	6.9	**7.6**	7.0	7.1	7.2	7.4	6.8	6.2	5.4	5.2	4.9	4.5	5.34
12	4.3	4.0	4.0	4.0	3.8	3.7	4.1	3.8	**3.7**	4.3	4.2	4.2	4.2	4.6	4.5	**4.9**	4.9	4.4	4.4	4.2	4.2	4.2	4.2	4.2	4.21
13	**4.2**	4.2	4.2	4.6	4.7	4.8	5.1	5.8	6.0	6.0	6.7	6.8	7.6	8.3	**8.9**	8.0	7.8	7.8	6.3	5.6	5.4	4.8	4.6	4.3	5.94
14	4.2	**4.1**	4.1	4.3	4.5	4.6	4.9	5.6	5.5	5.5	6.6	6.2	6.8	**6.8**	6.3	5.4	5.6	5.7	5.8	5.8	5.8	5.7	5.5	5.0	5.43
15	4.9	4.9	4.9	4.9	4.9	5.1	5.3	5.6	5.0	**5.7**	5.5	5.4	5.3	5.4	4.5	3.7	3.9	5.8	5.4	4.2	3.7	3.5	3.5	**3.4**	4.77
16	3.1	3.1	**3.0**	3.1	3.5	3.6	3.8	4.4	4.3	4.3	4.4	4.3	5.0	5.6	5.6	**6.1**	5.8	4.6	4.0	3.4	3.2	3.2	3.2	3.3	4.08
17	**3.4**	3.4	3.8	4.1	4.6	4.6	5.2	6.7	6.5	6.4	6.7	**7.9**	7.0	7.3	6.6	7.0	7.7	6.6	6.0	5.6	4.4	4.3	4.3	4.3	5.60
18	4.2	4.2	4.2	4.4	4.4	5.0	5.4	5.5	5.6	5.6	5.8	5.8	6.1	6.1	6.2	6.3	**6.5**	6.0	6.0	6.1	6.1	5.4	4.4	**3.0**	5.35
19	2.1	1.2	1.0	0.7	**0.5**	0.6	3.3	5.6	6.6	**7.2**	6.8	6.4	6.3	6.2	6.2	6.3	6.5	6.4	6.6	6.0	4.7	4.4	3.8	3.1	4.52
20	2.7	2.9	2.4	**1.9**	2.4	3.2	3.7	4.2	4.7	5.2	5.6	6.5	**6.7**	5.6	5.4	5.2	5.5	5.2	5.0	5.0	4.7	4.4	4.2	3.9	4.42
21	3.6	3.5	3.5	**3.4**	3.6	4.6	4.7	5.6	5.6	5.9	5.7	7.3	7.5	8.4	8.4	**8.6**	8.6	8.5	8.6	8.3	7.5	5.7	4.6	3.7	6.06
22	2.7	2.3	2.8	2.0	1.9	**1.9**	4.5	5.6	7.3	**7.7**	7.0	7.4	7.4	7.0	7.3	6.6	5.9	5.6	5.5	4.0	3.9	3.7	3.6	3.4	4.88
23	**3.3**	3.4	3.4	3.5	3.9	4.3	4.7	5.3	5.4	5.4	5.5	6.1	6.2	6.4	**6.4**	6.1	6.1	6.1	6.2	5.8	4.5	3.8	3.6	3.7	4.96
24	3.6	3.5	3.5	3.5	3.2	3.6	4.6	6.0	6.1	5.8	5.8	5.7	5.7	6.0	**6.0**	5.6	5.2	5.2	4.6	3.7	3.6	3.7	3.3	**3.1**	4.61
25	**3.0**	3.0	3.1	3.2	3.5	3.8	4.0	4.6	5.1	5.8	5.5	5.5	5.6	5.6	5.7	5.8	6.3	**6.4**	6.4	6.2	5.5	3.9	3.6	3.6	4.78
26	3.6	3.3	3.3	3.4	3.6	3.1	**2.8**	3.6	5.5	7.2	8.5	**8.5**	7.3	6.9	6.7	6.5	5.8	5.6	5.2	5.1	4.9	4.8	4.3	4.0	5.15
27	3.6	4.0	4.1	3.5	3.5	3.3	3.4	3.6	3.9	4.0	4.1	4.3	4.3	4.8	5.0	5.8	**6.6**	5.8	5.6	4.5	3.8	3.7	2.7	**2.2**	4.17
28	2.4	2.4	2.2	2.3	2.5	2.9	3.7	**4.2**	3.9	3.7	3.7	3.5	2.7	2.6	2.9	3.2	3.3	2.7	2.3	1.8	1.8	**1.4**	1.6	1.6	2.72
29	**1.3**	1.4	1.6	1.9	1.8	1.8	2.1	2.3	2.6	2.5	2.8	2.8	**2.9**	2.8	2.6	2.4	2.5	2.6	2.8	2.7	2.6	2.5	2.4	2.4	2.34
30	2.3	1.9	2.0	2.0	2.1	2.1	2.3	2.6	2.8	2.8	2.9	3.1	3.1	3.0	3.3	**3.4**	3.4	3.0	3.4	3.1	2.6	2.0	1.4	**1.1**	2.57
31	-0.1	-0.9	**-1.2**	-0.9	-0.7	-0.3	0.6	1.4	1.9	2.2	2.8	3.2	3.1	**3.4**	2.9	2.2	1.8	1.8	1.8	1.7	1.5	1.4	1.3	1.6	1.35
M.	4.21	4.10	4.05	**3.98**	4.07	4.21	4.71	5.26	5.53	5.69	5.97	6.28	6.28	**6.36**	6.27	6.11	6.07	5.95	5.82	5.48	5.17	4.83	4.56	4.32	5.22

H = 7 m
h_t = 1.3 m

$\varphi = 78^0\ 2'$ N
$\lambda = 14^0\ 14'$ E

September.

Datum	1a	2a	3a	4a	5a	6a	7a	8a	9a	10a	11a	MT	1p	2p	3p	4p	5p	6p	7p	8p	9p	10p	11p	MN	Mittel
1	1.6	1.6	1.5	1.3	1.1	1.6	2.0	2.9	2.3	2.7	2.3	2.6	2.6	2.6	2.4	2.2	2.2	3.2	2.0	1.4	1.3	1.3	1.4	1.6	1.99
2	1.6	1.3	1.2	1.3	1.6	1.8	2.2	2.8	2.7	2.7	2.7	2.7	2.9	3.0	2.8	2.5	2.4	2.4	2.4	2.3	2.2	2.1	2.0	1.9	2.23
3	2.1	2.0	1.7	1.6	0.9	0.9	0.9	1.2	1.3	1.4	1.6	1.6	2.2	2.8	2.6	2.4	2.4	2.5	2.5	2.0	2.0	2.0	1.4	0.9	1.79
4	0.6	0.2	0.1	-0.4	-0.8	-1.1	-0.7	1.6	2.7	3.6	4.5	4.6	4.4	3.3	3.8	4.1	2.9	2.7	2.4	1.8	1.6	1.4	1.3	1.1	1.90
5	1.0	0.8	0.8	0.8	0.8	0.8	0.9	1.2	1.8	2.1	2.4	2.7	2.7	2.8	2.6	2.7	2.6	2.1	2.0	1.6	1.5	1.3	1.2	1.1	1.68
6	1.0	0.6	0.5	0.2	0.1	0.1	0.1	1.8	2.4	2.8	2.8	2.8	2.9	2.2	2.3	2.7	2.6	2.6	2.0	1.1	0.4	-0.9	-1.4	-2.2	1.23
7	-2.2	-2.4	-2.6	-2.7	-2.0	-1.4	-0.7	0.0	0.9	1.1	1.5	2.0	2.2	2.1	1.8	1.7	1.8	1.7	2.0	1.5	1.2	0.9	0.8	0.8	0.42
8	0.7	0.6	0.7	0.7	0.6	1.0	1.3	2.2	2.4	2.7	3.0	3.0	2.9	2.9	2.9	2.7	3.1	3.7	2.8	1.9	1.2	0.7	0.0	-0.3	1.81
9	-0.5	-0.7	-0.7	-1.0	-1.0	-0.7	-0.4	-0.2	-0.2	-0.2	-0.3	-0.2	-0.2	0.0	0.1	0.1	0.0	-0.3	-0.3	-0.7	-1.0	-1.0	-0.9	-0.9	-0.47
10	-0.9	-1.2	-1.1	-1.4	-0.9	-1.0	-1.0	-0.3	-0.3	0.2	0.2	1.2	1.2	1.6	1.6	1.7	1.6	1.2	1.4	1.3	1.1	-0.2	-0.5	-0.6	0.20
11	-1.0	-1.6	-2.1	-2.3	2.3	-2.3	-1.5	-0.6	0.3	1.1	1.2	2.0	2.6	2.4	2.3	2.5	2.4	2.1	2.0	1.6	1.2	0.4	0.3	0.2	0.45
12	0.4	0.5	0.5	0.8	1.5	1.6	1.8	2.2	2.4	3.0	3.5	3.8	4.5	4.6	4.3	4.6	4.0	3.9	5.0	4.2	4.2	3.9	3.8	3.6	3.02
13	3.7	3.7	3.4	3.1	3.1	2.8	2.8	3.0	3.1	3.1	3.3	3.3	3.6	3.7	3.6	3.4	3.3	3.3	3.0	2.9	2.7	2.7	2.6	2.6	3.16
14	2.6	2.5	2.4	2.3	2.1	2.1	2.1	2.6	2.8	3.1	3.1	3.2	3.2	3.1	3.1	3.0	2.7	2.4	2.0	1.6	1.2	0.8	0.4	0.4	2.28
15	1.0	0.8	0.9	1.0	-0.8	1.0	1.3	1.8	2.8	1.8	1.8	2.5	2.4	1.8	1.8	1.8	1.8	1.3	0.7	0.0	-0.2	-0.2	-0.3	-0.5	1.16
16	-0.6	-0.7	-1.0	-1.2	-1.0	-0.6	-0.2	0.2	0.4	0.7	1.1	1.5	1.5	1.5	1.3	1.1	1.2	0.8	0.4	0.2	0.0	0.1	0.2	0.2	0.30
17	0.4	0.4	0.5	0.5	0.5	0.6	0.7	0.9	0.9	1.0	1.3	1.3	1.3	1.2	1.2	1.3	1.2	0.7	0.8	0.7	0.8	0.9	0.9	1.0	0.88
18	1.1	1.1	1.2	1.3	1.3	1.5	1.6	1.8	2.1	2.3	2.6	2.5	2.4	2.4	2.4	2.4	2.4	2.2	2.1	1.9	1.7	1.6	1.0	0.9	1.82
19	0.9	0.8	0.9	0.8	0.6	0.6	0.7	0.8	1.6	2.4	2.3	2.0	1.9	2.4	2.1	1.3	1.0	0.3	0.2	0.0	-0.2	-0.2	-0.4	-0.5	0.93
20	-0.1	-0.1	-0.2	-0.1	0.1	0.4	0.6	1.0	1.7	1.9	2.7	3.0	3.2	3.0	2.9	3.0	2.9	2.9	2.6	2.0	1.9	1.8	1.9	1.9	1.70
21	1.9	1.9	1.9	1.8	1.8	1.8	1.8	2.0	3.6	4.0	3.5	3.4	4.0	3.0	2.3	2.4	1.7	1.0	0.6	-0.1	-0.3	-0.8	-1.1	-1.3	1.70
22	-1.4	-1.3	0.0	0.2	0.4	0.4	0.4	0.6	1.0	1.1	1.1	1.5	1.6	1.6	1.5	1.2	0.9	0.7	0.0	0.0	0.2	0.2	0.2	0.2	0.51
23	0.2	0.2	-0.3	-0.3	-0.4	-0.8	-0.9	-0.6	-0.6	0.3	1.6	2.4	1.7	1.6	1.4	1.3	0.9	0.6	0.4	0.2	0.1	0.1	-0.1	-0.3	0.36
24	-0.5	-0.5	-0.7	-0.7	-0.5	-0.4	-0.3	0.2	0.6	0.8	1.8	2.2	2.0	2.4	2.7	2.6	1.6	1.2	0.6	0.7	0.8	0.8	1.8	1.6	0.87
25	2.0	2.4	2.8	2.9	2.6	2.4	2.3	2.2	1.7	1.4	1.5	2.3	2.3	2.3	2.4	2.4	2.4	2.0	1.8	1.6	1.5	1.7	1.1	1.3	2.05
26	1.3	1.2	0.9	0.9	0.7	0.7	0.4	0.4	0.5	0.6	0.9	1.1	1.3	1.4	1.3	1.3	0.8	0.5	0.4	0.2	0.2	0.3	0.2	0.2	0.74
27	0.5	0.5	0.3	0.3	0.1	0.0	0.0	0.0	0.2	0.0	0.3	0.4	0.2	0.0	0.0	-0.3	-0.5	-0.9	-1.4	-2.3	-2.2	-2.6	-2.8	-2.9	-0.55
28	-4.3	-5.5	-5.0	-4.4	-4.1	-3.2	-2.1	-1.2	-0.8	-0.8	-0.7	-0.6	-0.7	-0.6	-0.4	-0.3	-0.1	0.0	0.2	0.3	0.3	0.5	0.6	0.5	-1.35
29	0.6	0.5	0.2	-0.1	-0.4	-0.8	-0.8	-0.8	-1.0	-0.5	-0.4	-0.4	-0.4	-0.4	-0.5	-0.3	-0.5	-1.7	-2.2	-2.3	-2.3	-2.6	-3.0	-2.7	-0.95
30	-2.5	-2.8	-3.9	-5.2	-6.1	-4.9	-5.2	-5.2	-4.1	-3.0	-2.9	-2.0	-1.8	-2.8	-3.8	-3.9	-4.8	-4.7	-5.2	-5.5	-5.6	-6.0	-5.9	-6.0	-4.32
M.	0.37	0.23	0.16	0.07	0.04	0.16	0.34	0.82	1.17	1.45	1.68	1.95	2.02	1.93	1.83	1.79	1.56	1.35	1.11	0.74	0.58	0.37	0.22	0.13	0.92

Oktober.

Datum	1a	2a	3a	4a	5a	6a	7a	8a	9a	10a	11a	MT	1p	2p	3p	4p	5p	6p	7p	8p	9p	10p	11p	MN	Mittel
1	-6.1	-6.3	-6.1	-6.3	-6.4	-6.3	-6.1	-5.2	-4.1	-2.9	-1.8	-1.2	-0.8	0.0	-0.1	0.1	0.3	0.7	0.8	0.8	1.1	1.2	1.8	1.9	-2.12
2	1.9	1.9	1.9	2.4	2.5	2.6	2.4	2.8	2.8	2.4	2.6	3.0	3.0	3.4	3.0	2.7	2.9	3.3	3.8	4.2	4.6	4.6	4.7	4.9	3.10
3	4.8	5.1	4.2	4.4	3.8	3.6	3.4	4.2	4.3	4.1	4.0	4.0	4.0	3.4	2.8	2.7	1.7	0.8	0.6	0.2	0.4	0.5	0.6	0.9	2.86
4	1.1	1.1	2.1	1.6	1.4	1.2	1.2	1.2	1.2	1.1	1.1	1.2	1.1	0.9	0.9	0.7	0.6	0.5	0.4	0.2	0.1	0.0	-0.2	-0.5	0.84
5	-0.7	-1.2	-1.7	-1.8	-2.1	-2.7	-2.9	-3.0	-3.0	-2.5	-1.1	-1.4	-1.0	-1.0	-1.5	-2.3	-3.1	-3.3	-2.8	-2.5	-2.5	-2.2	-1.5	-1.4	-2.05
6	-1.6	-2.3	-2.9	-2.8	-3.0	-3.5	-3.6	-3.4	-3.0	-3.0	-2.8	-2.2	-2.5	-2.7	-3.3	-3.6	-4.1	-4.2	-4.3	-4.4	-4.4	-4.2	-3.6	-3.3	-3.28
7	-3.2	-2.8	-2.7	-2.8	-2.6	-2.5	-2.5	-2.4	-2.2	-1.8	-1.5	-1.4	-1.0	-1.1	-1.4	-1.7	-2.3	-3.1	-3.2	-3.4	-4.0	-4.4	-4.7	-4.9	-2.65
8	-5.0	-5.1	-5.0	-5.5	-5.5	-5.5	-5.5	-5.5	-5.5	-5.0	-4.4	-3.6	-3.4	-3.8	-4.1	-4.5	-4.5	-4.4	-4.2	-4.2	-4.5	-4.8	-4.6	-4.6	-4.70
9	-4.5	-4.5	-4.6	-5.2	-5.2	-4.8	-4.7	-4.8	-4.7	-4.5	-3.4	-2.4	-2.0	-2.0	-2.1	-2.5	-2.1	-2.4	-1.7	-1.0	-0.3	0.1	0.3	0.4	-2.86
10	0.4	0.7	0.6	0.6	0.6	0.6	0.6	0.6	0.7	1.0	1.1	1.2	1.0	0.5	0.3	0.0	-0.6	-0.5	-1.1	-1.2	-1.6	-1.7	-1.6	-1.5	0.03
11	-1.4	-1.0	-0.9	-0.7	-0.6	-0.4	-0.3	0.2	0.2	0.2	0.2	0.2	0.2	0.2	0.2	0.2	0.2	0.2	0.2	0.2	0.3	0.3	0.3	0.3	-0.06
12	0.2	0.3	0.2	0.2	0.2	0.3	0.3	0.3	0.3	0.5	0.5	0.8	0.6	0.6	0.6	0.5	0.6	0.5	0.4	0.5	0.5	0.3	0.5	0.5	0.42
13	0.5	0.6	0.6	0.6	0.6	0.7	0.7	1.4	2.3	2.1	2.1	2.6	2.7	2.7	2.4	2.4	2.3	2.3	1.9	1.6	1.3	0.8	0.4	0.1	1.49
14	-0.1	-0.1	-0.2	-0.2	-0.4	-0.3	-0.4	-0.4	-0.8	-1.0	-1.2	-1.3	-1.3	-1.2	-1.2	-1.2	-1.1	-1.1	-1.0	-0.7	-0.5	-0.3	-0.1	0.1	-0.67
15	0.8	0.1	0.0	-0.4	-1.0	-1.3	-2.0	-2.6	-2.5	-2.5	-2.5	-2.6	-2.6	-5.8	-5.8	-5.9	-6.0	-6.2	-6.8	-6.8	-6.8	-6.7	-6.1	-6.1	-3.67
16	-6.2	-6.5	-7.0	-7.0	-7.0	-7.0	-7.2	-7.0	-7.0	-7.0	-6.7	-6.3	-6.1	-6.0	-6.1	-6.4	-6.3	-6.5	-5.6	-5.6	-5.2	-5.0	-4.8	-5.0	-6.27
17	-5.1	-5.2	-4.9	-4.8	-4.7	-4.5	-4.2	-4.0	-4.1	-4.2	-4.4	-4.2	-4.2	-4.5	-4.8	-4.7	-4.8	-4.9	-5.2	-5.5	-6.5	-6.5	-6.6	-6.7	-4.97
18	-7.0	-7.1	-7.6	-7.7	-8.2	-8.4	-8.9	-9.2	-9.6	-9.9	-10.0	-10.7	-11.1	-12.0	-13.1	-11.8	-10.9	-10.2	-10.5	-11.0	-12.7	-13.2	-13.8	-14.0	-10.36
19	-14.7	-14.8	-14.8	-14.0	-13.6	-13.5	-12.9	-11.8	-11.5	-10.9	-10.6	-10.0	-9.8	-9.3	-9.2	-9.3	-9.4	-9.3	-9.3	-8.1	-7.5	-6.0	-5.2	-4.7	-10.42
20	-3.8	-4.0	-3.8	-3.6	-3.4	-3.3	-3.2	-3.0	-3.8	-3.8	-4.0	-5.0	-5.7	-6.6	-7.2	-7.5	-7.6	-6.7	-6.2	-6.0	-5.4	-4.9	-4.3	-3.7	-4.85
21	-3.6	-2.8	-1.8	-1.1	-1.8	-1.8	-2.5	-2.6	-3.2	-3.6	-3.6	-3.6	-3.8	-3.6	-3.6	-3.9	-3.9	-4.0	-4.3	-4.5	-4.6	-4.8	-4.8	-4.1	-3.41
22	-4.6	-5.4	-5.3	-4.5	-4.5	-4.6	-4.3	-3.8	-3.5	-3.0	-3.3	-3.5	-2.9	-3.2	-2.3	-2.8	-3.1	-3.2	-3.0	-2.6	-2.6	-2.6	-2.4	-2.1	-3.46
23	-2.1	-2.2	-2.2	-2.3	-2.3	-2.1	-1.9	-1.7	-1.7	-1.7	-1.6	-1.5	-1.4	-1.9	-2.1	-2.0	-1.9	-1.8	-1.8	-2.4	-2.9	-3.9	-4.2	-4.7	-2.26
24	-5.9	-5.9	-5.7	-5.8	-5.0	-3.8	-3.4	-2.4	-2.5	-2.8	-2.2	-2.0	-2.1	-2.2	-2.8	-3.5	-4.6	-4.3	-5.2	-4.3	-3.5	-3.1	-3.5	-4.0	-3.77
25	-4.0	-4.3	-4.1	-4.5	-4.9	-5.0	-5.9	-5.8	-6.4	-7.8	-8.1	-8.6	-8.8	-8.2	-8.2	-8.0	-7.7	-6.5	-5.4	-4.6	-4.4	-3.6	-2.8	-1.6	-5.80
26	-1.4	-0.8	-0.8	-0.4	-0.6	-0.7	-0.5	-0.3	-0.3	-0.3	-0.1	0.0	0.0	0.4	0.6	0.5	0.9	1.1	1.2	0.8	0.8	0.8	-0.2	-0.3	0.02
27	-0.8	-1.0	-1.1	-1.3	-1.5	-1.5	-1.6	-1.8	-2.1	-2.8	-3.0	-3.6	-4.0	-4.0	-4.1	-4.1	-4.0	-4.0	-4.2	-3.7	-3.5	-3.5	-3.7	-4.5	-2.89
28	-4.8	-5.6	-5.8	-6.4	-6.4	-5.8	-5.6	-6.0	-6.2	-5.6	-5.9	-6.2	-6.2	-6.8	-6.2	-5.7	-6.0	-7.1	-8.8	-9.0	-9.2	-9.5	-10.3	-10.9	-6.92
29	-10.9	-11.0	-11.4	-11.5	-11.7	-12.0	-12.0	-12.0	-11.8	-11.2	-11.9	-11.9	-11.9	-10.9	-10.3	-10.1	-10.1	-10.0	-9.8	-10.3	-10.9	-11.2	-11.0	-10.6	-11.10
30	-10.8	-10.4	-10.2	-10.1	-10.0	-9.5	-9.4	-9.6	-9.8	-9.1	-9.2	-9.2	-8.8	-8.4	-8.3	-8.1	-8.5	-8.6	-9.0	-9.0	-9.0	-9.0	-9.2	-9.4	-9.28
31	-9.6	-9.7	-9.8	-9.9	-9.9	-9.8	-9.9	-10.0	-10.0	-9.7	-9.7	-9.9	-10.1	-10.0	-10.0	-10.2	-10.4	-11.1	-11.3	-12.0	-12.1	-12.4	-12.4	-12.2	-10.50
M.	-3.49	-3.55	-3.57	-3.57	-3.65	-3.60	-3.64	-3.47	-3.47	-3.39	-3.27	-3.20	-3.19	-3.33	-3.45	-3.55	-3.66	-3.68	-3.72	-3.69	-3.73	-3.71	-3.65	-3.60	-3.53

Spitzbergen. Green Harbour. **1924.** **Luft-Temperatur.**

H = 7 m
h_i = 1.3 m

$\varphi = 78^0\ 2'$ N
$\lambda = 14^0\ 14'$ E

November.

Datum	1a	2a	3a	4a	5a	6a	7a	8a	9a	10a	11a	MT	1p	2p	3p	4p	5p	6p	7p	8p	9p	10p	11p	MN	Mittel
1	-11.8	-10.4	-9.7	-9.4	-9.3	-10.1	-10.4	-9.8	-9.6	-9.6	-9.5	-9.6	-9.6	-9.4	-8.9	-8.7	-8.7	-9.1	-9.2	-9.3	-9.9	-10.6	-10.8	-10.5	-9.75
2	-10.9	-11.3	-11.7	-12.4	-12.6	-13.1	-13.1	-12.8	-13.6	-13.7	-13.9	-13.8	-14.5	-14.4	-14.5	-14.1	-13.6	-13.4	-13.4	-13.7	-13.6	-12.8	-12.4	-11.9	-13.13
3	-12.0	-11.4	-10.9	-10.7	-10.7	-10.6	-10.6	-10.7	-10.5	-10.5	-10.9	-11.5	-11.8	-12.4	-12.7	-12.5	-12.0	-12.2	-12.4	-12.4	-12.2	-11.6	-12.4	-12.8	-11.60
4	-13.3	-13.7	-14.1	-14.1	-13.7	-14.2	-14.3	-14.7	-15.2	-15.1	-15.2	-15.0	-14.8	-14.4	-14.3	-13.8	-14.2	-14.2	-15.3	-15.5	-15.8	-16.1	-16.6	-17.1	-14.78
5	-17.0	-17.2	-17.5	-17.6	-17.7	-17.6	-16.3	-16.0	-15.9	-15.4	-15.5	-14.5	-13.9	-13.0	-12.4	-9.9	-9.6	-9.7	-9.9	-10.1	-10.7	-10.8	-10.8	-10.6	-13.73
6	-10.5	-10.7	-10.5	-11.9	-10.4	-10.0	-9.9	-9.8	-9.7	-9.6	-9.9	-10.1	-10.1	-9.0	-9.0	-9.1	-9.7	-10.1	-10.5	-10.5	-10.5	-10.6	-10.7	-10.8	-10.15
8	-10.9	-11.0	-11.0	-11.0	-11.0	-10.9	-10.9	-10.9	-11.4	-11.3	-11.5	-11.7	-11.4	-11.4	-11.4	-11.9	-13.6	-13.9	-14.6	-14.8	-14.0	-14.3	-13.7	-13.0	-12.15
7	-11.5	-11.0	-10.5	-9.6	-8.3	-7.5	-7.2	-7.0	-6.3	-5.6	-5.0	-4.2	-3.9	-3.1	-2.8	-2.3	-2.7	-2.1	-2.1	-2.2	-2.5	-2.8	-2.9	-3.2	-5.26
9	-3.1	-3.3	-3.3	-3.8	-4.0	-4.2	-4.1	-3.9	-4.3	-4.5	-4.8	-5.5	-5.8	-7.3	-8.0	-7.9	-7.7	-7.6	-7.2	-5.8	-5.1	-4.1	-3.6	-3.1	-5.08
10	-2.6	-2.3	-2.3	-2.2	-0.8	-0.5	-0.3	0.3	1.2	1.4	1.9	2.0	2.2	2.2	2.1	2.3	2.3	2.4	2.6	2.5	2.2	2.0	1.7	1.7	0.92
11	1.5	1.3	1.3	0.8	0.2	-0.3	-0.7	-1.0	-1.3	-1.2	-1.3	-1.3	-1.5	-1.0	-0.7	-0.8	-0.7	-1.0	-1.2	-1.4	-1.5	-1.5	-1.5	-1.5	-0.68
12	-1.7	-1.9	-2.0	-2.0	-1.8	-1.8	-1.8	-1.8	-1.9	-1.9	-2.2	-2.1	-1.8	-1.6	-1.5	-1.3	-1.3	-1.1	-0.8	-0.7	1.2	1.5	1.8	2.2	-1.10
13	1.7	1.6	1.7	1.9	1.6	1.1	1.0	0.9	0.5	0.4	0.6	0.6	0.8	1.0	1.4	1.5	1.0	0.9	0.8	0.7	0.1	-0.3	-1.5	-2.9	0.71
14	-3.6	-4.2	-4.6	-4.9	-5.1	-5.3	-5.6	-6.2	-6.9	-7.1	-7.5	-7.5	-8.1	-7.6	-8.1	-7.6	-7.5	-7.2	-7.4	-7.0	-6.7	-6.5	-5.4	-0.9	-6.19
15	1.0	1.2	1.6	1.8	2.0	2.0	2.0	1.2	1.1	1.0	0.0	-2.2	-3.6	-4.7	-6.7	-7.2	-7.5	-7.6	-7.8	-8.2	-8.5	-8.8	-8.9	-8.8	-3.15
16	-9.1	-9.0	-9.2	-9.7	-9.9	-10.1	-10.4	-10.4	-10.4	-10.3	-10.2	-10.1	-9.9	-9.6	-10.8	-11.7	-12.0	-12.4	-12.6	-12.8	-13.0	-13.1	-13.3	-12.6	-10.94
17	-12.6	-13.0	-13.3	-13.1	-12.8	-12.6	-11.9	-12.2	-10.4	-8.1	-7.5	-6.0	-3.8	-1.4	-2.0	-2.5	-2.9	-3.1	-3.1	-3.0	-2.8	-1.9	-1.9	-1.0	-6.79
18	-0.5	0.4	1.2	1.3	1.3	1.3	1.5	1.5	1.4	0.4	-0.8	-1.6	-2.2	-2.5	-2.8	-2.9	-2.9	-2.9	-2.8	-2.8	-2.8	-2.7	-2.9	-2.7	-1.06
19	-3.0	-2.4	-3.3	-3.4	-2.3	-1.8	-2.2	-2.2	-2.9	-2.9	-3.2	-3.3	-3.1	-3.1	-3.2	-3.5	-3.5	-3.6	-4.2	-5.0	-5.3	-5.3	-4.4	-3.8	-3.37
20	-3.6	-3.7	-3.5	-2.9	-2.1	-2.0	-1.9	-1.8	-2.0	-2.1	-2.2	-2.1	-2.0	-1.8	-1.9	-1.8	-2.0	-2.1	-1.9	-1.2	-0.3	-0.1	-0.1	0.3	-1.87
21	0.5	0.5	0.4	-0.4	-0.2	-0.3	0.0	-0.2	-0.4	0.0	-0.6	-1.0	-1.2	-1.4	-1.1	-0.8	-0.4	-0.2	-0.3	-0.4	-0.3	-1.0	-1.1	-0.7	-0.44
22	-0.7	-1.1	-1.6	-1.7	-2.6	-2.9	-3.3	-3.5	-3.9	-3.9	-3.7	-4.1	-4.4	-4.6	-4.7	-5.2	-5.5	-6.2	-6.8	-6.9	-6.8	-7.0	-6.7	-6.7	-4.35
23	-6.6	-6.3	-6.6	-6.5	-6.9	-7.0	-6.6	-6.2	-6.4	-6.5	-6.4	-6.4	-6.1	-6.4	-6.6	-6.7	-6.4	-6.9	-7.2	-7.1	-7.2	-7.6	-8.3	-9.0	-6.83
24	-9.3	-9.5	-10.1	-10.8	-11.2	-11.4	-12.1	-12.7	-12.6	-13.5	-13.9	-14.6	-15.4	-16.0	-16.6	-16.7	-16.6	-16.5	-15.6	-15.2	-14.9	-14.5	-14.7	-15.1	-13.73
25	-15.1	-15.2	-15.7	-15.0	-14.4	-13.8	-11.6	-12.0	-14.1	-15.0	-14.6	-14.0	-14.5	-14.0	-14.0	-14.6	-14.6	-15.0	-15.4	-15.7	-16.2	-16.4	-17.0	-16.9	-14.78
26	-16.2	-15.2	-14.8	-14.8	-15.6	-15.9	-15.7	-15.0	-15.6	-14.8	-15.0	-15.3	-15.7	-16.0	-16.0	-16.0	-16.1	-16.0	-16.6	-16.9	-17.1	-17.5	-17.9	-18.1	-15.99
27	-18.2	-18.4	-18.4	-19.3	-18.6	-18.2	-17.9	-18.9	-19.0	-19.1	-19.1	-19.3	-19.6	-19.0	-10.8	-19.8	-19.4	-18.9	-19.2	-18.9	-18.9	-18.8	-18.9	-18.9	-18.94
28	-18.5	-18.7	-18.6	-18.2	-18.2	-18.3	-18.3	-18.8	-18.9	-19.1	-19.2	-18.7	-18.7	-18.6	-18.6	-18.4	-18.6	-18.7	-18.8	-18.8	-18.9	-18.5	-18.0	-18.2	-18.60
29	-18.0	-18.1	-18.2	-18.4	-17.9	-17.9	-17.9	-17.6	-17.5	-17.3	-16.6	-17.2	-18.0	-18.2	-19.0	-18.9	-19.3	-19.4	-19.4	-19.2	-18.9	-18.8	-18.7	-18.7	-18.30
30	-18.8	-18.5	-18.2	-18.4	-18.8	-19.8	-19.8	-20.2	-19.2	-19.8	-19.9	-20.0	-20.5	-21.3	-21.6	-21.9	-21.8	-21.7	-21.8	-21.9	-22.0	-22.4	-22.1	-22.3	-20.53
M.	-8.48	-8.42	-8.45	-8.55	-8.39	-8.46	-8.34	-8.41	-8.52	-8.49	-8.59	-8.67	-8.76	-8.67	-8.87	-8.82	-8.92	-8.98	-9.14	-9.14	-9.10	-9.10	-9.12	-8.92	-8.72

December.

Datum	1a	2a	3a	4a	5a	6a	7a	8a	9a	10a	11a	MT	1p	2p	3p	4p	5p	6p	7p	8p	9p	10p	11p	MN	Mittel
1	-22.3	-21.4	-20.7	-20.3	-20.5	-20.7	-20.6	-21.0	-18.4	-19.9	-20.1	-20.1	-20.2	-19.0	-19.3	-19.3	-19.1	-19.4	-19.4	-19.5	-19.5	-19.5	-19.6	-19.4	-19.97
2	-19.3	-19.3	-19.4	-19.2	-19.4	-18.8	-19.0	-18.8	-19.0	-18.9	-18.9	-19.0	-18.8	-17.2	-18.2	-18.4	-18.1	-17.1	-15.3	-14.9	-14.7	-14.4	-14.6	-14.1	-17.70
3	-13.7	-13.2	-12.9	-12.3	-12.1	-11.9	-12.0	-11.6	-10.7	-7.6	-6.6	-5.2	-4.1	-3.6	-3.2	-3.3	-1.7	-1.6	-1.3	-1.1	-1.3	-1.5	-2.0	-3.7	-6.59
4	-4.8	-5.2	-5.3	-5.5	-5.8	-6.1	-6.6	-7.0	-7.2	-7.4	-7.7	-8.2	-8.5	-9.6	-9.3	-9.3	-9.5	-9.7	-10.6	-10.9	-11.4	-11.5	-11.5	-11.5	-8.34
5	-11.3	-11.2	-11.2	-10.9	-10.8	-10.6	-10.4	-10.2	-10.2	-10.2	-10.1	-10.1	-10.1	-10.0	-9.1	-9.0	-8.9	-8.1	-7.0	-7.0	-6.2	-5.6	-5.1	-4.7	-9.08
6	-4.4	-4.2	-4.2	-4.1	-3.9	-3.6	-3.2	-3.2	-3.2	-3.1	-2.9	-2.7	-2.7	-2.4	-2.2	-2.0	-1.2	0.0	0.4	0.6	0.6	1.0	1.2	1.4	-2.00
7	1.4	1.2	1.2	1.1	1.1	1.3	1.3	1.4	1.4	1.3	1.4	1.2	0.9	0.8	0.5	0.3	0.1	0.0	-0.2	-0.5	-0.6	-0.7	-1.0	-1.1	0.58
8	-1.1	-1.2	-1.6	-1.6	-1.7	-1.7	-1.9	-2.4	-1.2	-0.2	-0.5	-0.8	-1.8	-1.7	-1.3	-1.3	-1.2	-0.9	0.0	0.2	-0.2	-0.5	0.9	1.6	-0.92
9	1.4	1.4	1.3	1.0	0.7	0.8	0.6	0.6	0.4	0.2	0.1	0.1	0.1	-0.4	-0.7	-0.6	-0.9	-1.1	-1.5	-2.3	-2.7	-3.0	-3.4	-3.6	-0.48
10	-3.9	-4.0	-4.1	-4.3	-4.3	-4.3	-4.3	-4.3	-4.1	-4.2	-4.1	-4.1	-4.2	-4.6	-4.8	-4.9	-5.4	-5.0	-5.2	-5.3	-5.6	-5.9	-6.5	-6.5	-4.75
11	-6.8	-7.2	-7.8	-7.8	-8.5	-9.1	-9.7	-10.0	-10.0	-9.1	-7.6	-7.5	-7.8	-8.6	-9.1	-9.1	-9.3	-10.1	-9.8	-10.0	-8.4	-7.8	-7.4	-7.7	-8.59
12	-7.4	-7.2	-7.1	-7.1	-7.1	-7.2	-7.3	-7.4	-7.6	-8.0	-8.4	-8.5	-8.6	-8.6	-9.0	-9.0	-9.0	-9.0	-8.8	-8.9	-8.4	-8.0	-8.0	-8.1	-8.07
13	-7.7	-7.6	-6.8	-6.0	-4.8	-4.4	-4.1	-3.4	-2.9	-2.5	-1.8	-1.3	-0.8	-0.4	0.0	0.0	-0.3	-0.6	-3.4	-5.5	-6.3	-7.2	-8.5	-9.4	-3.99
14	-10.2	-10.4	-10.5	-11.0	-11.1	-10.9	-11.0	-11.0	-10.9	-10.6	-10.5	-10.5	-10.5	-10.4	-10.5	-10.5	-10.7	-10.7	-11.0	-11.2	-11.5	-11.4	-12.1	-12.5	-10.90
15	-11.9	-12.0	-12.0	-12.0	-12.1	-12.9	-12.9	-13.0	-12.2	-11.8	-12.4	-12.6	-12.6	-12.8	-12.7	-12.7	-13.1	-13.2	-14.0	-14.2	-13.8	-13.5	-13.5	-14.8	-12.86
16	-16.1	-15.9	-16.0	-16.3	-16.7	-16.4	-17.0	-16.4	-15.7	-15.6	-15.7	-14.8	-15.7	-16.8	-17.9	-18.0	-17.7	-16.0	-16.4	-15.7	-14.9	-14.2	-14.2	-14.5	-16.02
17	-14.7	-14.5	-13.5	-10.9	-11.2	-10.8	-9.9	-9.8	-10.2	-10.2	-10.2	-10.0	-10.0	-10.0	-10.2	-10.7	-10.6	-11.1	-11.0	-12.5	-13.4	-13.5	-14.2	-14.4	-11.56
18	-15.1	-16.1	-17.0	-17.2	-16.9	-16.3	-15.4	-14.2	-13.5	-13.0	-13.0	-10.6	-10.5	-10.6	-10.8	-10.9	-12.3	-13.2	-15.0	-15.0	-14.5	-14.1	-14.0	-13.6	-13.87
19	-13.2	-12.6	-12.7	-12.1	-12.0	-12.0	-12.0	-12.0	-12.0	-12.1	-12.5	-12.6	-13.1	-13.4	-13.9	-13.9	-13.7	-13.6	-13.8	-13.8	-14.2	-14.0	-13.9	-13.8	-13.04
20	-13.0	-12.5	-13.2	-13.3	-13.3	-13.4	-13.4	-13.2	-13.7	-13.7	-13.8	-13.9	-13.8	-13.2	-13.0	-12.8	-12.3	-11.9	-11.0	-7.7	-7.4	-7.1	-6.7	-6.6	-11.83
21	-6.5	-5.3	-5.4	-4.8	-4.8	-5.1	-5.4	-5.4	-5.1	-5.4	-5.5	-5.6	-5.8	-6.4	-7.3	-7.1	-7.2	-7.3	-8.0	-9.1	-10.7	-12.4	-13.8	-15.9	-7.30
22	-14.7	-15.4	-14.1	-15.8	-14.5	-13.1	-8.7	-5.0	-4.3	-3.7	-5.1	-5.9	-6.5	-7.2	-8.9	-9.5	-10.5	-10.3	-8.0	-8.0	-8.2	-8.1	-8.8	-8.6	-9.29
23	-8.2	-8.4	-8.6	-8.7	-8.5	-6.8	-3.9	-1.9	-0.7	-0.2	0.5	0.7	1.5	2.4	2.5	2.8	2.7	2.8	3.0	1.4	1.3	1.3	1.4	1.7	-1.25
24	1.8	1.4	1.4	1.2	1.6	2.0	2.7	2.4	1.6	1.0	0.2	1.3	1.7	1.7	1.7	1.4	1.6	1.3	1.2	2.4	1.7	1.7	0.9	0.7	1.52
25	-0.4	-1.2	-2.1	-3.1	-3.4	-3.5	-3.8	-4.0	-3.7	-3.5	-3.2	-3.0	-3.1	-3.2	-3.5	-3.7	-4.2	-4.6	-4.8	-5.2	-5.4	-5.7	-5.8	-7.3	-3.81
26	-8.6	-9.0	-10.2	-11.2	-11.8	-11.8	-11.6	-12.0	-12.1	-12.1	-12.2	-12.1	-12.6	-12.3	-11.8	-12.2	-12.6	-12.6	-12.9	-13.1	-13.2	-12.6	-11.3	-11.2	-11.80
27	-10.9	-10.9	-10.8	-10.8	-10.3	-9.4	-8.9	-8.2	-7.9	-7.3	-7.1	-7.0	-7.0	-6.8	-6.4	-6.4	-6.4	-6.3	-6.3	-6.4	-6.5	-6.4	-6.5	-7.1	-7.83
28	-8.0	-9.4	-11.1	-10.6	-10.7	-10.8	-11.2	-12.4	-12.6	-13.0	-12.8	-12.0	-11.9	-12.2	-13.1	-13.3	-13.7	-13.8	-13.3	-13.8	-14.0	-15.0	-14.9	-15.0	-12.44
29	-14.9	-14.2	-14.7	-14.3	-14.1	-13.9	-14.0	-14.2	-14.4	-15.0	-15.4	-16.6	-16.9	-17.3	-17.1	-17.9	-18.5	-19.1	-19.1	-19.5	-20.2	-19.5	-19.8	-19.6	-16.68
30	-19.3	-20.0	-19.8	-19.1	-19.0	-19.0	-19.2	-18.8	-18.6	-18.9	-18.7	-18.3	-18.2	-18.3	-18.5	-19.0	-19.2	-19.7	-20.2	-20.0	-19.6	-19.0	-18.5	-18.4	-19.05
31	-17.7	-17.8	-17.7	-16.1	-15.7	-17.1	-17.7	-18.0	-18.8	-19.1	-19.2	-18.9	-18.8	-18.0	-18.7	-19.3	-19.1	-19.3	-19.4	-19.4	-19.4	-20.0	-20.0	-19.6	-18.53
M.	-9.73	-9.78	-9.89	-9.78	-9.73	-9.60	-9.37	-9.17	-8.95	-8.83	-8.83	-8.66	-8.72	-8.71	-8.90	-9.02	-9.10	-9.07	-9.10	-9.22	-9.31	-9.29	-9.39	-9.59	-9.24

H = 7 m $\varphi = 78^0\ 2'$ N

$h_t = 1.3$ m $\lambda = 14^0\ 14'$ E

Januar.

Datum	1a	2a	3a	4a	5a	6a	7a	8a	9a	10a	11a	MT	1p	2p	3p	4p	5p	6p	7p	8p	9p	10p	11p	MN	Mittel
1	-19.5	-20.7	-20.4	-19.8	-20.4	20.3	-20.8	-20.8	-21.0	-21.1	-21.2	-21.4	**-21.5**	-21.0	-20.8	-20.3	-20.0	-19.8	-19.3	-19.0	-19.0	-18.7	-18.4	**-18.2**	-20.14
2	-18.4	-18.1	-17.9	-18.0	-18.0	-18.4	-18.8	**-19.0**	-18.6	-17.7	-17.2	-17.4	-17.2	-18.0	-17.9	-17.7	-17.9	-17.7	-17.7	-16.6	-17.7	-16.7	-15.3	**-14.4**	-17.60
3	-14.2	-13.7	-14.0	-14.1	-14.6	-14.0	-14.6	-14.6	**-15.2**	-14.6	-14.7	-14.7	-14.7	-14.0	-13.9	-14.1	-14.8	-14.8	-15.0	-14.2	-13.5	-13.0	-12.7	**-7.8**	-13.98
4	-6.3	-6.3	**-5.9**	-6.2	-6.4	-6.4	-6.6	-6.6	-6.6	-6.7	-7.1	-7.2	-7.5	-7.8	-8.0	-8.2	-8.3	-8.6	-8.8	-8.9	-9.0	-9.2	-9.4	**-9.5**	-7.56
5	**-9.7**	-9.8	-9.9	-10.0	-10.1	-10.2	-10.3	-10.3	-9.4	-10.1	-10.6	-10.7	-11.1	-11.2	-12.9	-15.0	-16.2	-16.7	-17.0	-17.3	-17.3	-17.4	-17.2	**-18.4**	-12.87
6	-17.3	-18.2	-18.8	-18.7	-20.2	**-20.4**	-19.7	-19.8	-19.9	-18.7	-19.2	-19.5	-18.7	-19.2	-18.7	-19.5	-19.5	-19.3	-18.8	-17.2	-16.3	-15.4	-15.5	**-15.3**	-18.49
7	**-15.3**	-15.1	-14.4	-13.3	-12.2	-10.2	-8.2	-6.8	-7.4	-7.7	-7.5	-7.6	-7.6	-8.0	-6.7	**-5.6**	-6.0	-6.9	-7.2	-7.5	-7.8	-8.3	-9.2	-9.6	-9.00
8	**-10.4**	-10.6	-10.8	-11.3	-12.0	-12.3	-12.6	-12.6	-12.7	-13.1	**-13.2**	-13.1	-12.8	-12.1	-11.8	-12.0	-12.0	-12.0	-12.4	-12.4	-12.4	-12.4	-12.8	-13.0	-12.20
9	-13.9	-14.0	-14.0	-14.1	-14.2	-14.3	-14.3	-14.2	-14.1	-14.1	-14.8	-15.6	-15.0	-16.0	-16.9	-17.6	-19.7	**-22.4**	-22.0	-19.2	-18.0	-15.9	-13.8	**-12.2**	-15.85
10	-9.4	-8.2	-6.5	-5.9	-5.0	-3.0	-3.5	**-3.3**	-3.4	-4.0	-5.3	-6.3	-6.9	-7.6	-8.1	-8.4	-8.6	-9.0	-9.1	-9.4	-9.4	-9.3	-9.8	**-10.1**	-7.10
11	-10.4	-10.4	-10.6	-10.7	-11.0	-11.2	-11.2	-12.5	-13.5	-14.1	-14.5	-14.9	-15.1	-15.0	-15.3	**-15.5**	-12.4	11.3	-9.6	-10.0	-9.9	-9.4	-9.2	**-9.1**	-11.95
12	**-7.9**	-7.0	-6.4	-6.1	-5.6	-5.6	-5.5	-5.4	-4.9	-4.7	-4.6	-4.2	-4.3	-4.4	-4.1	-3.9	-3.8	-3.1	-3.0	**-2.6**	-2.7	-2.8	-4.0	-4.9	-4.65
13	**-5.9**	-6.0	-6.5	-7.2	-7.9	-8.7	-9.3	-10.2	-10.5	-11.3	-11.4	-11.6	-12.1	-12.2	-12.3	**-12.3**	-12.0	-11.5	-11.7	-11.7	-12.0	-12.1	-12.2	-12.3	-10.45
14	**-12.5**	-12.9	-13.3	-13.5	-13.8	-14.3	-14.6	-15.7	-17.2	-17.7	-19.2	-20.8	**-21.4**	-20.9	-20.9	-20.8	-20.9	-21.0	-20.4	-20.3	-16.9	-15.7	-14.6	-14.1	-17.22
15	**-13.3**	-13.0	-13.1	-12.5	-12.3	-12.5	-12.6	-12.2	-12.4	-12.3	-12.2	-11.8	-10.8	-10.2	-9.1	-8.5	-8.1	-7.9	-8.0	-8.3	-8.3	-8.3	-8.3	**-7.0**	-10.54
16	**-6.9**	-8.3	-9.7	-11.0	-11.7	-12.5	-13.3	-13.6	-13.9	-14.2	-14.3	-14.6	-14.9	-14.8	-14.9	-14.9	-15.1	**-15.2**	-15.0	-14.9	-15.1	-14.9	-15.1	-15.1	-13.50
17	-15.1	**-15.5**	-15.2	-15.0	-14.9	-14.6	-13.7	-11.8	-11.7	-11.7	-11.9	-12.1	-12.3	-12.4	-12.4	-12.6	-12.8	-13.2	-13.8	-14.1	-13.2	-12.6	-12.3	**-11.5**	-13.18
18	-10.5	-11.1	-10.6	-10.5	-10.6	-10.4	-10.2	-9.1	-8.1	-7.6	-8.6	-8.8	-8.7	-8.4	-8.6	-8.4	**-7.1**	-8.3	-9.4	-9.9	-10.3	-10.6	-11.0	**-11.5**	-9.51
19	**-12.1**	-12.7	-12.8	-12.9	-12.9	-13.0	-13.3	-13.4	-13.9	-13.6	-14.0	-14.5	-14.7	-14.8	**-14.8**	-14.4	-13.9	-13.3	-12.8	-12.7	-12.5	-12.5	-12.4	-12.3	-13.34
20	-12.2	-11.6	11.4	-11.3	-11.2	-11.4	-11.5	-11.4	-11.3	-11.4	**-11.1**	-11.2	-11.2	-11.2	-11.4	-11.5	-12.4	-12.9	-12.6	-12.3	-12.7	-13.2	-13.6	**-13.8**	-11.91
21	-14.1	-14.3	**-14.5**	-14.3	-12.1	-12.4	-12.8	-12.8	-13.0	-12.9	-13.1	-12.5	-12.5	-12.5	-12.5	-11.8	**-11.4**	-11.9	-12.0	-11.2	-12.0	-11.6	-12.2	-12.2	-12.61
22	**-11.9**	-11.5	-11.9	-11.6	-10.8	-8.0	-6.9	-5.8	-5.3	-4.4	-2.9	-0.6	1.0	**1.3**	0.7	0.1	-1.3	-2.5	-5.3	-6.6	-7.5	-7.8	-7.8	-7.7	-5.62
23	-7.3	-7.2	**-7.1**	-7.3	-7.7	-7.8	-7.8	-7.8	-7.7	-7.4	-7.7	-8.3	-8.3	-8.6	-8.4	-8.1	-7.6	-8.2	-8.8	-9.6	-10.2	-10.9	-11.1	**-12.0**	-8.45
24	**-12.7**	-13.2	-13.6	-14.0	-14.1	-14.3	-14.1	-13.8	-13.6	-13.5	-13.7	-13.7	-14.6	-14.8	-15.0	-15.0	-14.9	-15.4	-16.2	-17.0	-17.2	-17.1	-19.5	**-20.7**	-15.07
25	-19.7	-19.2	**-21.0**	-19.9	-18.1	-18.0	-17.5	-17.0	-17.1	-17.0	-17.0	-16.8	-16.8	-17.6	-19.7	-20.2	-16.5	**-16.1**	-16.0	-16.1	-16.2	-17.2	-19.2	-19.3	-17.88
26	-20.0	-21.7	**-22.3**	-21.7	-21.6	-21.3	-21.3	-20.6	-18.5	-20.3	-20.0	-19.7	-19.5	-19.7	-19.6	-19.8	-19.6	-19.8	-19.6	-19.2	-18.8	-18.4	-17.8	**-16.1**	-19.87
27	**-15.9**	-15.6	-14.9	-14.0	-13.5	-12.8	-11.9	-11.6	-11.5	-11.4	-11.1	-11.0	-10.8	-10.6	-10.4	-10.0	-9.8	-9.8	-9.4	-9.2	-9.0	-8.5	-8.5	**-8.3**	-11.23
28	**-8.2**	-8.1	-8.1	-7.9	-7.8	-7.6	-7.6	-7.1	-7.1	-7.0	-6.8	-6.6	-6.5	-6.2	-5.9	-5.6	-5.4	-5.6	-5.6	-5.5	-5.3	-4.9	-1.8	**-1.6**	-6.24
29	-1.6	-1.6	-1.6	-1.5	-1.3	**-1.0**	-1.1	-1.2	-1.9	-2.4	-3.3	-4.1	-5.3	-6.8	-6.9	-6.9	**-7.6**	-7.0	-6.6	-6.8	-6.8	-6.6	-6.2	-6.1	-4.26
30	-6.1	-6.3	-6.3	-6.3	-6.3	-6.5	-6.6	-6.6	-6.8	-7.0	-7.5	-8.1	-8.8	**-9.8**	-9.3	-8.3	-7.8	-7.3	-6.8	-6.6	-6.5	-6.2	-6.2	**-5.8**	-7.08
31	-5.7	-5.5	-5.4	-5.6	-5.5	-5.6	-5.6	-5.6	-5.5	-5.2	**-5.1**	-5.1	-5.3	-5.2	-5.1	-5.2	-5.5	-7.3	-8.2	-9.3	-9.5	-9.6	**-9.7**	-8.9	-6.42
M.	-11.75	-11.85	-11.90	-11.81	-11.74	-11.61	-11.54	-11.39	-11.41	**-11.45**	-11.64	-11.76	-11.80	-11.93	-11.99	-12.00	-11.90	-12.12	**-12.20**	-12.12	-12.04	-11.85	-11.84	-11.57	-11.80

Februar.

Datum	1a	2a	3a	4a	5a	6a	7a	8a	9a	10a	11a	MT	1p	2p	3p	4p	5p	6p	7p	8p	9p	10p	11p	MN	Mittel
1	-8.0	-6.0	**-5.8**	-6.9	-6.3	-6.2	-7.9	-9.0	-9.7	-9.9	-8.1	-8.3	-7.4	-7.2	-7.2	-7.3	-7.6	-8.1	-8.4	-8.4	-8.9	-9.4	-9.8	**-10.4**	-8.01
2	**-10.8**	-11.6	-12.1	-12.6	-13.0	-13.3	-13.4	-13.8	-14.3	-14.6	-15.3	-16.3	-18.0	-19.0	-20.7	-20.3	-20.0	-20.6	-20.2	-20.4	-21.2	-21.3	**-22.5**	-22.2	-16.98
3	**-21.4**	-21.0	-20.7	-20.1	-20.4	-20.3	-13.8	-12.0	-11.8	-11.8	-11.8	-12.0	-11.9	-12.4	-12.6	-12.3	-12.1	-12.9	-12.8	-12.7	-11.8	-11.9	**-10.9**	-11.3	-14.28
4	**-11.0**	-11.0	-11.9	-13.0	-13.1	-14.0	-14.8	-15.4	-15.9	-16.0	-16.3	-18.2	-19.6	-19.2	-20.1	-20.1	-20.9	-21.1	**-21.5**	-19.2	-17.8	-17.6	-17.6	-17.2	-16.77
5	-18.6	**-18.2**	-18.8	-19.0	-18.4	-18.4	-18.9	-19.1	-19.9	-20.4	-20.4	-20.4	-20.6	-20.8	-20.9	-20.9	-20.6	-20.2	-20.2	-20.3	-20.7	-21.7	**-22.0**	-22.0	-20.06
6	-21.6	-21.5	-21.3	-20.9	-20.9	-20.8	-20.9	-20.2	-19.9	-19.4	-18.5	-18.0	-17.9	-17.6	-17.5	**-17.3**	-17.4	-17.7	-17.4	-17.8	-18.2	-19.5	-21.3	**-21.6**	-19.38
7	-22.2	-22.4	**-23.2**	-23.0	-22.7	-22.4	-21.4	-21.1	-20.1	-20.7	-20.5	-19.5	-15.2	-11.2	-11.4	-11.7	-11.4	-11.7	-11.4	-11.4	-11.8	**-10.6**	-11.0	-11.0	-16.62
8	-10.9	-10.5	-9.9	-9.9	-9.7	-9.7	-8.9	-8.6	-8.5	-8.5	-8.0	-9.4	-9.6	-8.8	-8.5	-8.4	-8.8	-7.8	**-7.2**	-8.7	-9.9	-10.0	**-11.6**	-10.1	-9.25
9	**-8.6**	-8.0	-6.7	-6.6	-6.2	-5.7	-5.3	-5.2	-5.8	-5.5	-5.3	-5.2	-5.2	-5.2	-5.2	-5.0	-5.3	-5.4	-5.4	-5.2	-4.6	-4.5	-4.2	**-4.1**	-5.56
10	-4.0	-3.9	-3.6	-3.5	-3.3	-3.1	-3.0	**-2.7**	-2.8	-2.9	-3.3	-3.4	-3.8	-4.0	-4.0	-4.0	-4.3	-4.5	-4.6	-4.6	-4.2	-4.1	-4.3	**-4.8**	-3.78
11	-4.0	-4.0	-4.0	-4.2	-4.0	-4.3	-3.9	**-3.8**	-4.1	-4.4	-4.0	-4.1	-4.1	-3.8	-3.9	-3.9	-4.1	-4.2	-3.8	-4.3	**-4.4**	-4.2	-4.0	-4.0	-4.06
12	-3.9	-3.6	-3.5	-3.3	-3.8	-3.7	-3.6	-3.6	-3.7	-3.8	-5.0	-5.8	-5.9	-6.0	-6.2	-6.1	-6.2	**-6.5**	-4.8	-3.0	-2.8	-2.8	-2.4	**-1.9**	-4.25
13	-1.8	-1.7	-1.3	-1.2	-1.1	-1.1	-1.2	-1.2	-1.4	-1.2	-1.4	-1.6	**-1.0**	-1.1	-1.3	-1.8	-1.9	-2.1	-2.1	-2.1	-2.2	-2.4	-2.7	**-2.9**	-1.66
14	-3.2	-3.2	-3.3	-3.5	-3.5	-3.5	-3.3	**-3.0**	-3.0	-3.2	-3.3	-3.6	-3.7	-3.8	-4.2	-4.3	-4.4	-4.4	-4.2	-4.2	-4.5	-4.5	-4.5	**-4.5**	-3.78
15	**-4.5**	-4.7	-4.5	-4.6	-5.1	-5.1	-5.2	-5.2	-5.3	-5.4	-5.6	-5.7	-5.9	-6.1	-6.2	-6.3	-6.5	-6.7	**-6.7**	-6.7	-6.5	-6.4	-6.4	-6.7	-5.75
16	-6.5	-6.5	-6.3	-6.3	**-6.2**	-7.1	-8.0	-8.3	-7.9	-7.4	-7.6	-8.7	-9.6	-9.2	-8.6	-8.9	-9.2	-9.6	-10.0	**-10.2**	-9.7	-9.5	-9.2	-9.1	-8.32
17	-8.9	**-8.5**	-8.8	-9.6	-11.1	-12.2	-11.7	-11.0	-11.7	-12.1	-10.8	-10.6	-10.3	-11.1	-13.3	-13.8	-13.8	-15.0	-14.9	-13.8	-14.6	-15.3	-14.7	**-15.6**	-12.22
18	-15.3	-16.3	-16.2	-14.8	**-17.1**	-16.6	-14.2	-12.9	-11.8	-11.0	-10.3	-9.7	-9.0	-9.0	**-7.9**	-8.1	-8.6	-8.9	-10.0	-11.2	-11.7	-11.9	-12.1	-12.4	-11.96
19	-13.0	-12.9	-12.8	-12.6	-11.2	**-10.5**	-11.5	-12.0	-12.2	-14.2	-14.9	-15.4	-15.3	-17.3	-17.2	-18.1	-18.0	-17.7	-18.2	**-18.2**	-17.9	-16.5	-17.4	-17.4	-15.08
20	**-17.1**	-18.4	-19.4	-19.5	-19.7	-19.8	-19.7	-20.4	-21.0	-21.3	-21.3	-20.4	-20.7	-20.9	-20.6	-20.7	-20.7	**-21.3**	-20.4	-19.8	-19.2	-19.0	-18.3	-18.2	-19.91
21	-18.2	-17.9	**-17.1**	-17.5	-18.7	-19.5	-20.2	-21.2	-22.0	-22.2	-22.3	-22.8	-22.7	**-22.8**	-22.2	-21.3	-21.2	-22.0	-22.2	-21.1	-21.3	-21.1	-21.0	-20.0	-20.77
22	**-19.3**	-18.3	-16.5	-15.3	**-15.0**	-15.2	-15.4	-15.8	-16.4	-16.7	-16.4	-16.6	-16.4	-16.4	-16.6	-16.7	-16.8	-16.9	-17.4	-17.5	-17.2	-17.5	-17.7	-17.2	-16.72
23	-17.1	-17.2	-17.9	-18.0	-18.2	-18.8	-18.4	-18.2	-18.5	-20.4	-20.6	-20.8	-22.4	-23.0	-22.8	**-23.8**	-20.6	-11.5	**-11.2**	-11.4	-11.7	-11.9	-12.4	-12.8	-17.42
24	**-13.1**	-14.2	-15.3	-15.8	-16.0	-16.4	-17.1	-17.7	-18.0	-18.6	-19.8	-18.7	-18.0	-17.4	-17.5	-17.1	-16.7	-14.5	-15.4	-17.6	-18.8	-19.6	-19.8	**-20.2**	-17.22
25	-20.0	**-19.8**	-20.2	-20.4	-20.5	-21.2	-22.5	-24.5	-25.0	-23.8	-23.9	-23.4	-24.3	-23.2	-25.3	-24.8	-24.6	**-25.8**	-25.0	-25.1	-24.9	-24.6	-24.4	-23.1	-23.25
26	**-24.4**	-24.3	-23.3	-23.2	**-24.2**	-21.7	-20.6	-20.0	-19.6	-18.7	-18.7	-17.4	-16.7	-16.1	-16.0	-15.5	-15.3	-14.8	-14.3	-14.1	-13.7	-13.7	-13.3	**-12.9**	-18.02
27	-12.8	-12.4	-12.1	-11.8	-11.6	-11.2	-10.7	-10.2	-9.7	-9.4	-9.5	**-8.8**	-9.3	-9.7	-9.9	-10.9	-11.4	-11.8	-12.0	-12.4	-12.4	-12.7	-12.7	**-13.5**	-11.20
28	-12.1	**-12.1**	-12.2	-12.5	-15.7	-17.3	-19.0	-19.7	-20.4	**-21.4**	-19.6	-18.6	-18.6	-18.6	-17.7	-17.8	-17.8	-17.2	-16.0	-16.0	-15.9	-16.1	-16.1	-15.1	-16.81
M.	-12.58	-12.50	**-12.45**	-12.46	-12.74	-12.82	-12.66	-12.71	-12.87	-13.03	-12.95	-12.90	-12.97	-12.89	-13.05	**-13.11**	-13.08	-12.89	-12.78	-12.76	-12.80	-12.87	-13.01	-12.94	-12.83

Spitzbergen. Green Harbour. **1925.** **Luft-Temperatur.**

H = 7 m $\varphi = 78^0\ 2'$ N

$h_t = 1.3$ m $\lambda = 14^0\ 14'$ E

März.

Datum	1a	2a	3a	4a	5a	6a	7a	8a	9a	10a	11a	MT	1p	2p	3p	4p	5p	6p	7p	8p	9p	10p	11p	MN	Mittel
1	-15.2	-14.9	-14.4	-13.5	-13.5	-13.3	-13.2	-13.1	-13.1	-13.2	-11.7	-10.5	-9.7	-9.3	-8.8	-8.3	-8.6	-7.6	-7.6	-8.4	-8.2	-7.4	-7.4	-7.4	-10.76
2	-7.4	-6.4	-6.8	-7.0	-6.0	-5.9	-6.0	-5.6	-5.7	-5.4	-5.6	-5.5	-5.6	-6.4	-6.4	-6.4	-5.8	-5.8	-5.8	-6.5	-6.5	-6.4	-6.4	-6.3	-6.15
3	-7.2	-7.2	-6.6	-6.1	-5.5	-5.6	-4.9	-4.6	-4.2	-4.1	-4.1	-4.2	-4.4	-4.3	-4.1	-4.1	-3.9	-3.3	-3.0	-2.8	-2.3	-1.7	-1.3	-2.0	-4.23
4	-1.0	-1.2	-1.1	-1.5	-1.6	-2.1	-2.0	-1.8	-1.8	-1.9	-2.0	-2.1	-2.3	-2.6	-3.2	-3.9	-4.6	-4.6	-4.6	-5.4	-5.6	-5.3	-5.1	-5.2	-3.02
5	-4.9	-5.1	-5.0	-5.4	-5.8	-5.8	-5.8	-5.8	-5.8	-6.2	-6.2	-6.2	-6.4	-7.0	-7.2	-7.6	-8.1	-8.3	-8.8	-9.1	-9.5	-9.7	-9.9	-10.4	-7.08
6	-11.3	-11.7	-12.2	-13.6	-14.4	-14.5	-14.5	-14.6	-14.9	-15.7	-15.6	-15.2	-15.0	-14.4	-14.4	-14.3	-14.9	-14.9	-14.6	-13.4	-12.9	-12.8	-12.8	-13.0	-13.98
7	-12.7	-13.1	-14.1	-13.5	-13.8	-14.2	-14.3	-14.3	-14.3	-14.3	-14.4	-14.4	-14.4	-14.5	-14.6	-14.3	-13.3	-13.2	-12.8	-12.4	-12.4	-12.3	-11.9	-12.7	-13.59
8	-12.2	-12.8	-13.0	-13.4	-13.8	-13.9	-14.0	-13.0	-13.0	-13.0	-11.3	-11.6	-11.9	-12.0	-12.1	-12.5	-12.6	-12.5	-13.6	-15.1	-15.7	-15.8	-15.9	-16.2	-13.37
9	-17.4	-17.9	-17.6	-17.5	-17.5	-18.2	-17.9	-18.4	-18.0	-19.0	-19.0	-18.8	-18.6	-19.0	-19.8	-20.0	-20.5	-21.2	-21.8	-23.1	-22.5	-22.6	-22.6	-22.5	-19.64
10	-22.7	-22.6	-22.7	-23.6	-23.0	-23.3	-23.6	-23.0	-23.2	-21.8	-19.4	-19.6	-19.6	-18.6	-17.8	-18.4	-18.3	-19.1	-19.0	-19.0	-18.4	-18.0	-18.5	-18.2	-20.48
11	-17.1	-17.1	-17.8	-17.7	-17.1	-16.7	-17.4	-16.6	-16.6	-16.0	-16.0	-16.1	-15.8	-15.1	-16.4	-18.2	-17.6	-18.6	-18.4	-20.3	-19.3	-17.9	-16.6	-15.4	-17.16
12	-13.2	-8.4	-6.9	-6.8	-6.8	-6.2	-6.2	-5.6	-5.4	-5.1	-4.9	-4.6	-4.2	-3.6	-3.5	-3.1	-2.6	-2.3	-1.8	-1.8	-1.6	-1.3	-1.2	-1.2	-4.51
13	-1.3	-1.0	-0.9	-0.8	-0.8	-0.7	-0.7	-0.6	-0.5	-0.6	-1.1	-1.1	-1.5	-2.0	-2.4	-3.3	-4.4	-4.2	-4.6	-5.4	-6.2	-6.6	-6.4	-8.2	-2.72
14	-8.5	-9.3	-9.5	-9.9	-9.3	-8.7	-8.0	-7.6	-7.5	-8.6	-10.1	-10.0	-11.3	-9.0	-9.0	-8.4	-8.6	-10.2	-12.1	-12.8	-13.2	-12.8	-11.9	-12.5	-9.95
15	-11.9	-11.8	-9.2	-9.8	-8.8	-8.4	-8.4	-7.7	-7.9	-8.0	-7.7	-6.6	-6.0	-6.7	-6.1	-6.0	-6.6	-6.7	-5.6	-6.7	-7.8	-6.9	-5.5	-5.1	-7.58
16	-6.7	-6.5	-5.8	-6.9	-6.4	-7.7	-7.8	-7.2	-7.2	-7.2	-6.8	-6.4	-6.2	-6.2	-7.6	-7.8	-8.2	-9.1	-9.8	-10.1	-10.5	-10.5	-10.8	-10.6	-7.92
17	-9.4	-9.5	-9.1	-8.9	-8.9	-9.1	-8.2	-7.8	-6.7	-5.5	-4.9	-4.4	-4.1	-4.7	-5.0	-4.7	-4.5	-4.3	-4.2	-5.3	-4.7	-4.3	-4.1	-4.1	-6.10
18	-4.2	-3.7	-3.6	-4.0	-4.2	-4.0	-4.8	-3.8	-4.2	-4.6	-2.7	-2.5	-2.6	-2.7	-3.0	-3.3	-3.5	-3.6	-4.0	-3.6	-3.5	-3.5	-4.1	-4.3	-3.67
19	-4.5	-4.7	-5.5	-5.9	-6.0	-6.4	-6.6	-6.6	-6.6	-6.7	-6.7	-6.7	-6.6	-7.8	-8.3	-8.3	-8.4	-9.1	-9.6	-9.9	-10.1	-10.7	-13.0	-14.6	-7.89
20	-15.2	-16.8	-17.2	-17.3	-15.1	-15.7	-16.3	-16.1	-16.1	-15.5	-14.7	-14.2	-14.6	-15.2	-15.9	-16.1	-16.7	-16.7	-17.3	-19.2	-21.3	-20.5	-21.3	-22.3	-16.97
21	-21.8	-22.6	-22.6	-23.7	-23.8	-23.7	-23.4	-21.7	-22.4	-21.6	-19.4	-18.4	-17.6	-18.0	-18.5	-19.1	-20.3	-20.4	-20.1	-21.5	-21.8	-22.1	-22.2	-23.1	-21.24
22	-22.8	-22.0	-21.9	-21.6	-21.1	-21.7	-20.7	-19.1	-18.6	-17.7	-16.5	-15.6	-15.9	-15.3	-16.1	-16.6	-16.7	-16.6	-16.6	-17.0	-16.7	-16.4	-16.8	-16.2	-18.18
23	-16.3	-16.4	-15.6	-16.1	-15.4	-15.7	-15.8	-15.8	-15.9	-15.6	-15.0	-14.9	-15.3	-15.4	-15.5	-15.4	-15.3	-15.9	-16.9	-18.1	-20.4	-21.4	-21.9	-21.5	-16.73
24	-22.0	-21.9	-23.0	-23.0	-23.7	-23.8	-22.8	-21.7	-20.9	-19.9	-18.9	-17.3	-17.7	-17.6	-18.4	-18.3	-19.5	-20.1	-21.8	-21.8	-21.7	-21.1	-20.1	-19.2	20.68
25	-18.7	-18.5	-17.8	-17.5	-17.7	-18.7	-19.3	-18.8	-19.1	-17.8	-17.0	-16.7	-15.9	-16.5	-16.2	-17.1	-17.9	-19.3	-20.7	-21.1	-21.4	-21.2	-21.0	-20.8	-18.61
26	-21.2	-21.1	-21.3	-21.2	-20.5	-20.1	-19.3	-16.6	-14.5	-12.7	-10.4	-8.2	-7.8	-7.3	-7.4	-7.5	-6.7	-6.5	-6.7	-6.4	-7.2	-7.0	-7.2	-7.4	-12.17
27	-7.1	-7.5	-8.0	-7.9	-9.3	-9.2	-8.5	-7.3	-7.2	-7.0	-7.2	-7.0	-7.4	-8.6	-8.4	-8.5	-9.2	-10.1	-9.8	-10.6	-10.4	-10.7	-10.8	-11.0	-8.70
28	-10.9	-11.8	-11.5	-11.0	-10.7	-9.8	-9.5	-8.6	-8.4	-7.4	-6.5	-6.0	-4.6	-3.8	-3.6	-2.4	-2.9	-4.0	-6.6	-8.0	-8.4	-8.9	-9.3	-10.1	-7.70
29	-10.2	-9.9	-7.9	-7.7	-10.2	-9.4	-9.3	-7.4	-6.9	-6.5	-6.1	-5.7	-5.3	-5.0	-5.4	-6.0	-6.2	-6.7	-6.8	-6.8	-7.5	-7.6	-7.6	-7.6	-7.32
30	-7.1	-7.8	-7.4	-7.7	-7.3	-6.9	-6.2	-5.8	-4.7	-4.7	-4.5	-4.4	-3.7	-3.7	-5.0	-6.1	-5.4	-6.5	-6.1	-6.5	-7.1	-7.2	-7.9	-8.0	-6.15
31	-8.2	-8.8	-8.7	-8.5	-8.5	-8.5	-8.5	-8.4	-8.6	-8.2	-8.2	-8.3	-8.2	-8.6	-8.8	-8.8	-9.1	-9.4	-9.8	-10.3	-11.0	-11.6	-12.2	-12.5	-9.24
M.	-11.95	-11.94	-11.76	-11.90	-11.82	-11.87	-11.74	-11.13	-10.96	-10.69	-10.15	-9.78	-9.68	-9.71	-9.96	-10.15	-10.35	-10.67	-11.00	-11.56	-11.80	-11.68	-11.73	-11.92	-11.08

April.

Datum	1a	2a	3a	4a	5a	6a	7a	8a	9a	10a	11a	MT	1p	2p	3p	4p	5p	6p	7p	8p	9p	10p	11p	MN	Mittel
1	-12.8	-12.9	-13.2	-13.2	-13.3	-13.1	-13.0	-12.8	-12.4	-12.5	-13.1	-12.9	-13.2	-13.4	-13.9	-13.8	-14.2	-15.1	-15.4	-15.9	-16.3	-16.4	-16.7	-17.2	-14.03
2	-17.2	-17.6	-17.8	-17.8	-17.5	-17.5	-17.4	-17.1	-17.0	-17.0	-16.9	-16.7	-16.1	-16.6	-16.3	-15.8	-16.0	-16.0	-17.0	-17.7	-18.0	-18.3	-18.9	-19.1	-17.22
3	-19.3	-19.6	-19.5	-19.7	-19.6	-19.5	-19.2	-18.4	-18.7	-18.3	-18.3	-17.5	-16.7	-17.6	-18.0	-17.7	-18.4	-19.8	-22.0	-23.1	-23.8	-23.8	-25.3	-25.3	-19.96
4	-26.0	-25.8	-25.9	-26.2	-26.4	-25.9	-25.7	-23.6	-23.3	-23.1	-20.5	-18.9	-19.5	-20.0	-20.2	-19.8	-20.3	-21.5	-22.2	-23.8	-24.1	-25.1	-25.3	-25.9	-23.29
5	-25.8	-26.2	-26.0	-25.5	-25.1	-23.9	-22.8	-21.0	-20.8	-20.2	-19.5	-19.4	-19.1	-19.1	-18.6	-18.5	-18.1	-18.0	-17.2	-16.8	-16.8	-16.6	-16.3	-16.6	-20.33
6	-16.9	-17.0	-17.4	-17.0	-16.8	-16.0	-14.7	-6.4	-6.2	-6.2	-5.2	-5.2	-5.9	-5.8	-6.1	-5.7	-5.8	-5.9	-6.4	-7.1	-8.4	-9.2	-9.7	-10.5	-9.65
7	-10.6	-10.0	-10.5	-11.5	-13.0	-14.9	-16.0	-16.9	-17.2	-16.9	-16.7	-16.8	-18.0	-19.2	-19.1	-19.5	-19.2	-19.2	-20.2	-20.6	-20.7	-20.5	-22.2	-24.0	-17.22
8	-20.1	-17.3	-16.1	-15.1	-13.9	-13.2	-12.0	-10.5	-9.8	-9.2	-9.3	-8.4	-8.5	-8.6	-7.6	-7.8	-8.2	-8.9	-8.9	-9.6	-10.3	-10.8	-10.5	-10.5	-11.05
9	-10.4	-11.0	-10.8	-11.5	-12.6	-13.7	-14.3	-15.0	-14.9	-15.5	-15.2	-15.8	-17.3	-18.2	-18.5	-17.8	-18.0	-19.4	-20.8	-21.5	-22.1	-22.2	-22.6	-22.3	-16.72
10	-22.3	-22.4	-23.8	-24.3	-25.8	-25.7	-27.0	-25.2	-24.4	-23.5	-21.7	-19.7	-19.6	-19.4	-20.3	-19.8	-20.0	-20.6	-22.9	-23.6	-23.8	-23.7	-23.1	-22.6	-22.72
11	-22.1	-21.9	-21.4	-21.4	-20.9	-21.0	-21.0	-19.8	-19.4	-18.4	-18.0	-17.6	-16.9	-17.0	-16.8	-16.0	-16.3	-16.4	-16.9	-17.3	-17.5	-16.8	-16.5	-16.5	-18.49
12	-16.4	-15.9	-15.7	-15.3	-14.9	-13.9	-13.1	-11.6	-11.9	-10.7	-9.7	-9.5	-9.1	-8.3	-7.6	-7.9	-8.2	-8.2	-8.2	-8.3	-8.3	-8.3	-8.0	-7.4	-10.68
13	-7.4	-5.2	-1.5	-0.9	-0.4	0.4	0.7	2.2	0.8	0.8	0.9	1.7	2.6	2.6	2.6	2.4	2.6	2.3	2.0	1.8	1.9	1.5	1.5	1.6	0.73
14	1.5	1.4	1.2	0.4	0.0	-0.5	-0.5	-0.2	-0.4	-0.3	-0.2	-0.2	-0.3	-0.4	-1.0	-1.8	-2.7	-2.8	-3.4	-3.9	-4.3	-4.6	-5.3	-5.4	-1.40
15	-5.4	-5.8	-6.0	-5.9	-5.8	-5.4	-5.0	-4.0	-2.7	-2.1	-1.3	-1.4	-2.3	-2.3	-2.5	-3.1	-4.3	-6.6	-8.0	-9.0	-9.4	-9.6	-9.9	-10.1	-5.33
16	-10.5	-10.7	-11.1	-11.2	-11.5	-11.8	-11.5	-10.6	-10.8	-10.8	-10.2	-9.8	-9.2	-9.0	-8.6	-8.5	-9.1	-10.7	-12.0	-13.3	-14.2	-14.6	-14.9	-15.5	-11.25
17	-16.0	-17.2	-17.8	-17.7	-16.9	-16.3	-15.3	-14.8	-14.6	-14.0	-13.7	-13.8	-13.9	-12.8	-12.5	-12.9	-13.0	-12.5	-15.4	-15.8	-16.9	-18.4	-19.3	-19.6	-15.46
18	-20.0	-20.3	-20.6	-20.6	-19.9	-19.7	-19.8	-18.4	-17.2	-16.1	-15.4	-14.7	-14.5	-14.2	-13.2	-13.5	-13.5	-13.2	-13.4	-14.0	-14.2	-14.3	-14.4	-14.6	-16.24
19	-14.6	-14.3	-14.2	-13.8	-13.5	-13.0	-12.1	-10.2	-9.4	-9.6	-8.6	-8.4	-9.0	-9.6	-9.6	-9.8	-9.7	-9.7	-9.6	-10.4	-11.1	-13.4	-14.2	-15.0	-11.37
20	-15.1	-15.1	-15.0	-15.0	-15.4	-15.9	-16.0	-14.8	-10.8	-9.8	-8.4	-8.2	-9.1	-10.0	-10.1	-10.1	-10.6	-10.8	-10.5	-10.7	-12.6	-14.0	-15.9	-16.5	-12.52
21	-17.0	-17.5	-17.7	-18.2	-18.3	-18.3	-17.0	-14.7	-13.0	-10.5	-9.1	-8.9	-7.1	-7.1	-7.0	-6.2	-7.1	-7.3	-8.2	-10.2	-11.4	-12.6	-12.8	-13.5	-12.11
22	-13.9	-13.9	-14.0	-13.4	-13.6	-12.2	-11.3	-9.0	-7.7	-7.0	-6.9	-6.0	-4.2	-4.3	-5.1	-5.2	-6.5	-6.8	-6.9	-7.5	-8.3	-8.3	-8.4	-9.1	-8.73
23	-8.9	-8.7	-8.3	-8.1	-8.1	-8.2	-7.6	-5.8	-5.4	-4.3	-3.4	-2.5	-2.0	-1.7	-0.9	-0.6	-1.4	-1.9	-3.0	-3.5	-3.9	-3.7	-4.5	-4.9	-4.64
24	-4.9	-4.4	-4.0	-2.9	-2.7	-1.8	-1.5	-1.5	-1.1	-0.8	0.0	-0.2	-0.1	0.2	-1.3	-1.0	-1.3	-1.9	-3.2	-4.3	-4.6	-6.1	-6.5	-7.7	-2.65
25	-8.4	-9.2	-9.2	-10.0	-9.9	-8.4	-7.4	-6.2	-5.2	-4.2	-2.8	-2.5	-1.9	-1.9	-1.7	-1.5	-0.6	-2.6	-3.0	-2.9	-4.4	-4.6	-5.6	-5.9	-5.00
26	-6.7	-7.3	-7.4	-8.2	-8.4	-8.6	-7.8	-6.4	-6.3	-5.7	-5.4	-4.7	-4.0	-3.6	-3.7	-4.0	-5.1	-6.0	-7.0	-8.3	-9.1	-10.1	-12.2	-13.8	-7.08
27	-14.7	-15.6	-16.1	-17.5	-16.4	-16.5	-15.1	-12.5	-11.9	-10.1	-9.3	-7.3	-7.8	-8.0	-7.6	-6.5	-7.7	-8.0	-10.0	-11.0	-12.3	-14.1	-16.1	-16.4	-12.05
28	-18.2	-17.8	-19.6	-19.2	-19.5	-18.4	-15.2	-13.9	-13.2	-12.3	-10.6	-9.6	-9.4	-9.3	-8.2	-7.6	-8.7	-9.0	-9.4	-11.0	-11.0	-10.9	-11.3	-11.6	-12.70
29	-11.7	-11.6	-11.0	-10.6	-10.3	-9.6	-9.0	-7.6	-7.0	-6.8	-5.5	-5.4	-4.7	-4.4	-4.5	-4.4	-3.9	-4.1	-5.3	-5.9	-6.5	-6.9	-7.3	-7.4	-7.14
30	-7.2	-6.0	-4.2	-3.7	-3.2	-3.0	-2.7	-1.6	-0.9	0.4	0.7	1.0	1.5	0.9	0.1	-0.3	-0.7	-1.7	-2.6	-3.0	-3.9	-4.0	-4.6	-4.9	-2.23
M.	-13.97	-13.89	-13.82	-13.83	-13.79	-13.52	-13.01	-11.61	-11.09	-10.49	-9.78	-9.31	-9.18	-9.27	-9.26	-9.16	-9.53	-10.08	-10.90	-11.63	-12.21	-12.68	-13.23	-13.61	-11.62

H = 7 m
h_t = 1.3 m

φ = 78° 2′ N
λ = 14° 14′ E

Mai.

Datum	1a	2a	3a	4a	5a	6a	7a	8a	9a	10a	11a	MT	1p	2p	3p	4p	5p	6p	7p	8p	9p	10p	11p	MN	Mittel
1	-4.9	-5.0	-4.9	-4.8	-4.8	-4.0	-3.4	-1.7	-1.6	-0.8	-0.2	0.1	0.3	**0.7**	-0.6	0.3	0.1	-1.2	-2.4	-3.8	-5.6	-6.8	-6.8	**-7.4**	-2.88
2	-7.7	-8.2	-9.2	-9.6	-10.4	-10.6	-8.8	-7.0	-5.7	-5.1	-4.2	-3.3	-2.9	-2.3	**-2.1**	-2.3	-2.5	-4.7	-5.9	-7.2	-8.4	-9.7	-10.7	**-11.6**	-6.67
3	-13.7	-14.5	-14.4	**-16.0**	-15.2	-13.0	-13.1	-10.2	-9.4	-7.2	-5.4	-4.2	**-3.2**	-4.0	-4.0	-3.7	-3.6	-4.5	-4.4	-5.2	-6.5	-7.4	-7.5	-7.6	-8.33
4	-7.6	-7.4	-7.1	-6.7	-6.2	-6.1	-5.1	-6.6	-2.7	-2.7	-2.2	-2.3	**-1.9**	-3.0	-4.4	-4.6	-4.8	-5.1	-5.6	-6.4	-6.9	-7.4	-8.0	**-8.1**	-5.37
5	**-8.7**	-9.1	-9.2	-9.5	-9.8	-9.9	-9.8	-9.7	-9.9	-10.1	-10.1	-10.1	-9.6	-9.8	-9.8	-10.2	-10.7	-11.5	-12.6	-13.2	-13.5	-13.8	-14.2	**-14.4**	-10.80
6	-14.6	-15.1	-17.6	-18.3	**-18.5**	-17.5	-15.5	-13.5	-12.1	-11.5	-10.9	-10.5	-10.0	**-9.4**	-9.4	-10.0	-10.3	-10.3	-10.4	-11.6	-12.1	-13.5	-14.3	-15.9	-13.03
7	-16.8	-18.1	-18.1	-18.5	**-19.0**	-17.3	-15.2	-12.4	-10.9	-10.7	-8.6	-7.5	-6.5	-6.2	-6.2	-6.2	-6.2	-6.1	-6.0	-6.4	-5.8	**-5.8**	-6.3	-7.2	-10.33
8	-7.7	-8.2	-9.3	-10.6	-11.4	**-11.6**	-10.5	-10.1	-9.2	-8.4	-7.4	**-6.6**	-7.5	-8.3	-9.2	-8.9	-7.8	-9.1	-9.3	-10.0	-10.4	-11.1	-11.5	-11.6	-9.40
9	-12.1	**-12.5**	-11.1	-10.0	-9.5	-8.8	-8.6	6.6	-6.6	-6.6	-6.6	-6.1	-5.0	-3.4	**-3.1**	-3.3	-4.2	-5.4	-6.7	-7.5	-8.7	-9.4	-9.5	-9.4	-7.53
10	-8.9	**-9.0**	-8.3	-8.2	-7.6	-6.2	-5.1	-2.8	-1.8	-1.5	-1.6	-1.5	-2.2	-1.0	-0.7	**0.3**	-0.9	-1.0	-1.4	-3.5	-3.9	-3.9	-3.9	-4.2	-3.70
11	-4.3	-4.1	-3.8	-3.2	**-2.8**	-3.1	-3.2	-3.2	-3.3	-3.3	-3.4	-4.1	-4.1	-4.4	-4.6	-4.9	-5.0	-5.5	-5.8	-6.2	-6.6	-7.0	**-7.3**	-7.1	-4.60
12	-7.5	-8.1	**-8.2**	-7.6	-7.5	-7.3	-6.8	-7.0	-6.6	-6.5	-6.7	-6.5	**-6.5**	-6.8	-6.6	-6.6	-6.5	-6.9	-7.0	-7.1	-7.3	-7.7	-8.1	-8.1	-7.15
13	-8.3	-8.4	-8.7	-8.0	-8.5	-9.0	-8.7	-7.9	-6.3	-6.1	-5.2	-4.8	-3.5	**-2.6**	-2.8	-3.0	-4.0	-5.4	-5.7	-6.0	-6.6	-7.5	-8.6	**-9.9**	-6.48
14	-10.2	-9.4	-9.7	-9.4	-9.0	-8.7	-8.3	-7.7	-6.9	-6.3	-6.4	-5.6	-5.3	-5.2	-4.7	**-4.7**	-5.1	-6.4	-7.2	-7.7	-8.7	-10.6	-11.8	**-13.4**	-7.85
15	-12.8	-14.1	**-14.1**	-13.6	-13.4	-11.4	-9.2	-7.2	-5.9	-5.2	-4.6	-4.4	-4.2	-4.0	**-3.0**	-3.3	-3.4	-3.7	-3.8	-5.1	-6.5	-6.6	-6.4	-6.4	-7.18
16	-6.7	-6.7	-6.5	-6.3	-5.2	-4.7	-3.6	-2.4	-1.7	-1.2	**-0.7**	-1.0	-1.9	-1.5	-3.2	-3.3	-1.3	-1.3	-5.2	-7.3	**-8.9**	-8.2	-7.2	-6.4	-4.27
17	-6.4	**-7.2**	-6.9	-5.3	-4.8	-4.1	-3.7	-1.8	-2.1	-2.5	-2.6	-2.7	-1.9	-2.1	-0.8	**0.9**	-2.4	-3.2	-3.1	-3.8	-4.0	-4.6	-4.9	-4.8	-3.53
18	-4.8	-4.7	-5.3	-4.9	-4.5	-4.3	-3.5	-3.2	-2.7	-1.7	-2.1	-2.5	-2.1	**-1.6**	-2.8	-3.0	-3.7	-3.0	-3.2	-3.7	-4.3	-4.6	-4.6	**-5.4**	-3.59
19	-5.9	-6.9	-7.8	-9.5	-10.1	-9.0	-7.6	-7.0	-5.2	-4.0	-2.3	-1.4	-2.4	-1.8	**-1.4**	-2.1	-2.8	-3.7	-5.0	-7.2	-8.2	-10.1	-9.8	**-12.1**	-5.97
20	**-10.8**	-10.1	-9.9	-9.5	-6.9	-5.5	-4.6	-3.2	-2.7	-0.8	-0.2	-1.3	-0.2	**0.0**	-0.4	-1.1	-1.7	-2.6	-3.3	-3.9	-3.7	-4.7	-6.4	-7.5	-4.21
21	-7.7	-7.5	-7.4	-9.0	-8.1	-7.1	-5.4	-5.0	-4.1	-3.4	-2.9	-2.6	-3.2	-2.7	-2.6	-2.9	**-2.3**	-3.0	-3.7	-5.7	-6.8	-7.6	-8.6	**-8.8**	-5.34
22	-9.9	-10.8	**-11.6**	-11.4	-9.6	-8.6	-7.8	-5.9	-5.0	-5.0	-5.1	-4.9	-4.7	-4.6	**-4.4**	-4.8	-5.3	-6.2	-6.7	-8.7	-9.3	-10.8	-10.8	-10.7	-7.61
23	**-9.6**	-8.4	-8.1	-8.4	-7.1	-6.4	-5.4	-6.4	-5.3	-3.8	-3.7	-2.4	**-2.1**	-2.2	-2.9	-2.5	-3.1	-3.6	-4.0	-4.9	-5.1	-6.3	-7.1	-7.5	-5.26
24	-9.3	-9.6	-11.1	-10.8	-11.7	-11.5	-9.1	-7.5	-5.8	-3.4	-3.6	-2.0	-1.2	-2.2	**-1.0**	-1.3	-1.7	-5.3	-6.0	-8.0	-9.0	-9.2	**-12.2**	-11.8	-6.85
25	-12.0	-12.1	-12.2	-12.6	-13.3	-12.1	-11.7	-7.7	-6.1	-5.1	-2.9	-3.4	-3.1	**-2.8**	-4.7	-4.3	-5.4	-4.3	-5.4	-5.7	-7.5	-9.9	-11.3	**-13.0**	-7.86
26	-13.6	-14.5	-14.5	**-15.5**	-13.6	-12.6	-11.7	-8.8	-7.1	-5.4	-4.5	-3.0	-3.0	**-1.6**	-1.9	-2.0	-4.0	-6.1	-7.0	-8.5	-9.4	-9.5	-10.0	-12.2	-8.33
27	**-12.6**	-11.9	-11.9	-11.3	-9.1	-7.6	-6.6	-4.9	-4.9	-3.3	-2.5	-1.8	-1.2	**-1.2**	-1.7	-2.6	-3.1	-3.4	-4.8	-6.1	-7.8	-8.9	-10.7	-10.5	-6.27
28	-11.4	**-13.3**	-12.0	-12.8	-10.3	-10.9	-9.5	-6.8	-6.0	-4.8	-2.3	-2.4	-0.6	-0.6	-0.8	**-0.5**	-1.1	-2.2	-1.3	-2.2	-2.3	-2.7	-2.9	-3.1	-5.12
29	-3.5	**-3.6**	-3.5	-2.9	-2.1	-1.7	-1.1	-0.8	-0.2	0.1	0.6	2.0	**3.0**	2.0	1.8	2.7	1.0	-1.7	-0.2	-0.2	-0.7	-1.3	-2.2	-2.2	-0.61
30	-2.3	-2.8	**-3.0**	-2.9	-2.7	-2.2	-1.5	0.2	1.8	2.8	0.9	1.8	2.8	2.4	**2.7**	2.1	2.7	1.5	1.2	0.1	-0.2	-0.5	-0.5	-1.4	0.12
31	-1.6	-2.2	-2.2	**-2.4**	-1.2	-0.3	0.5	1.3	1.7	2.2	2.6	2.3	2.6	3.1	2.6	3.0	3.7	**3.8**	3.0	2.3	2.5	2.0	1.4	0.8	1.31
M.	-8.84	-9.15	-9.28	**-9.34**	-8.84	-8.23	-7.21	-5.92	-4.98	-4.24	-3.70	-3.31	-2.95	**-2.81**	-2.99	-2.99	-3.40	-4.23	-4.80	-5.82	-6.52	-7.26	-7.83	-8.35	-5.96

Juni.

Datum	1a	2a	3a	4a	5a	6a	7a	8a	9a	10a	11a	MT	1p	2p	3p	4p	5p	6p	7p	8p	9p	10p	11p	MN	Mittel
1	0.2	0.3	**0.0**	0.1	0.4	1.4	2.2	1.9	5.1	5.2	5.5	**5.7**	4.9	3.7	2.5	2.3	1.5	1.3	1.4	1.2	1.2	1.0	0.8	0.6	2.10
2	0.4	0.1	0.0	-0.3	**-0.8**	0.6	1.1	2.0	2.5	2.4	2.9	3.5	4.1	3.4	3.5	3.6	3.9	4.1	**4.2**	3.7	3.2	3.1	2.3	1.3	2.28
3	1.2	**1.2**	1.2	1.2	-1.4	1.6	2.2	2.5	2.7	2.8	3.0	3.0	3.1	3.2	**3.7**	3.5	3.5	3.4	3.3	2.3	2.0	1.4	1.6	1.6	2.36
4	1.5	1.5	1.6	1.8	1.8	2.8	2.7	3.1	**4.1**	3.5	4.1	3.5	4.0	3.6	3.7	3.6	3.5	3.2	2.4	2.2	1.8	1.6	1.0	**0.5**	2.63
5	0.4	0.5	0.5	1.5	1.5	1.5	2.0	2.6	2.9	3.4	3.4	3.7	3.8	4.4	**4.7**	3.6	3.9	3.0	2.1	2.1	1.6	1.2	0.3	**0.2**	2.28
6	-0.1	-0.1	**-0.2**	-0.2	0.0	0.7	0.7	1.1	0.8	0.9	1.6	1.7	1.3	1.2	2.1	**2.4**	1.4	1.3	1.0	0.7	0.2	0.5	0.9	1.3	0.88
7	1.9	2.2	2.3	2.6	2.1	1.7	**1.5**	1.7	3.3	**4.4**	4.1	3.8	3.6	3.2	3.7	3.8	3.5	3.0	2.7	2.0	1.7	1.3	1.0	1.0	2.59
8	1.0	1.0	0.9	**0.7**	0.8	1.7	2.4	2.6	2.0	1.8	2.4	2.3	**3.3**	3.2	2.8	2.4	2.4	1.9	2.0	1.7	1.7	1.1	1.2	0.8	1.84
9	0.6	**0.6**	0.6	0.7	1.1	1.2	1.4	2.0	2.0	1.8	1.7	2.6	**3.4**	3.0	2.5	2.7	2.8	2.8	2.8	2.5	1.9	1.6	1.4	1.5	1.88
10	1.5	1.4	1.4	1.5	**1.1**	1.6	2.2	2.6	2.9	2.9	3.7	**3.7**	3.2	3.6	3.5	3.5	3.5	2.9	2.5	1.7	1.4	1.4	1.8	1.8	2.39
11	1.9	2.1	2.4	2.8	2.6	2.4	2.4	2.8	2.6	2.0	1.7	2.1	3.0	**3.7**	3.3	2.6	2.3	2.1	2.3	2.2	1.8	1.0	0.9	**0.8**	2.24
12	0.8	0.9	1.2	**0.7**	1.1	1.5	1.3	2.1	2.4	3.0	2.7	3.2	**4.7**	4.2	3.9	3.9	3.8	3.3	3.5	3.8	3.4	3.3	2.5	2.3	2.65
13	2.1	**1.7**	2.1	2.5	2.8	2.9	2.2	2.4	2.6	2.9	2.7	2.6	2.9	3.4	4.8	**5.8**	3.3	3.9	3.3	3.1	3.1	2.5	1.9	1.7	2.88
14	1.5	**1.5**	1.5	1.6	2.6	3.5	4.6	4.0	4.6	4.7	4.5	4.2	4.7	4.9	**5.1**	3.8	3.3	2.6	3.0	3.0	2.5	2.4	2.2	2.1	3.27
15	1.8	1.5	**1.2**	1.7	2.4	2.7	3.6	4.0	5.0	5.0	5.0	**5.0**	3.7	4.0	4.4	4.2	3.4	3.9	2.9	2.3	1.9	1.8	1.6	1.6	3.11
16	1.8	2.2	2.2	2.6	2.2	2.5	3.4	4.2	4.3	4.4	**4.5**	4.0	4.3	4.2	3.8	3.5	3.2	2.9	2.7	2.3	2.1	1.8	1.6	**1.4**	3.00
17	**1.3**	1.7	1.8	2.1	2.2	3.0	3.6	3.8	4.7	5.7	6.4	**6.4**	4.2	2.2	2.3	2.2	2.1	2.2	2.8	2.7	3.4	4.2	3.8	3.2	3.25
18	2.7	2.8	2.7	**2.6**	3.0	3.8	5.0	**7.0**	6.6	5.1	5.1	5.5	5.6	5.1	5.2	5.5	4.8	6.0	5.2	5.4	4.7	3.3	3.1	3.0	4.53
19	2.1	**2.0**	2.1	2.1	2.3	4.1	4.3	3.7	4.2	4.8	4.8	**5.2**	5.2	3.7	2.2	2.4	3.4	3.9	3.8	2.3	3.1	3.4	2.6	2.8	3.35
20	**1.6**	2.2	2.5	2.6	3.0	3.3	3.6	4.2	4.2	4.0	5.1	**5.2**	5.1	4.2	4.3	4.0	3.9	3.8	3.8	2.7	2.6	2.6	2.1	1.9	3.44
21	1.8	**1.8**	1.9	2.1	2.4	2.3	2.9	3.6	4.0	4.4	4.7	5.4	5.3	**5.4**	5.2	4.6	4.9	4.8	4.4	4.3	3.7	3.7	3.5	3.3	3.77
22	3.0	2.9	**2.8**	2.9	3.1	3.1	3.4	3.8	4.4	4.4	4.5	4.6	4.4	4.4	**5.3**	5.1	5.2	4.7	4.6	4.8	4.6	4.6	4.6	4.8	4.17
23	4.4	3.4	**3.0**	4.0	4.5	4.1	4.7	5.8	6.4	8.4	**10.3**	9.2	7.1	6.9	7.0	7.3	6.2	5.7	5.4	4.9	4.5	4.3	4.2	4.2	5.66
24	5.5	4.5	3.3	**3.3**	4.3	5.1	5.9	5.4	6.0	7.0	8.0	8.2	8.6	9.2	**9.4**	8.7	8.0	7.1	6.1	6.1	5.8	5.6	5.5	5.0	6.32
25	4.9	3.7	4.2	3.7	4.5	4.0	4.0	**3.7**	4.8	6.8	6.9	**7.3**	7.2	6.2	5.3	4.8	4.5	5.1	4.8	4.6	4.7	4.4	4.8	5.1	5.00
26	4.6	**3.9**	4.6	4.6	4.7	4.8	5.0	5.1	5.5	6.6	6.7	6.7	7.5	8.4	9.0	**9.1**	9.0	7.9	8.0	8.4	8.5	8.2	8.1	7.9	6.78
27	7.7	7.5	6.3	6.0	5.3	6.0	6.3	7.5	7.4	6.6	6.8	7.1	7.3	7.8	**8.6**	8.4	8.4	7.9	7.4	5.5	4.4	3.2	2.8	**2.4**	6.44
28	**2.1**	2.2	2.5	3.3	3.4	3.5	3.5	3.6	5.0	5.6	5.5	**5.6**	5.3	4.8	4.9	4.7	4.2	4.0	4.6	4.5	4.3	4.1	3.5	3.1	4.08
29	3.0	2.8	**2.6**	2.6	2.6	2.6	3.0	3.0	2.6	2.8	4.0	**4.4**	4.0	3.8	3.6	4.0	4.2	4.0	4.0	4.0	3.6	3.9	4.0	3.8	3.45
30	2.9	**2.8**	2.9	2.9	3.1	3.7	3.9	3.9	3.9	5.0	4.7	4.5	4.6	4.8	4.8	**5.9**	5.8	4.2	4.6	4.9	4.5	5.3	4.4	3.9	4.25
M.	2.20	2.09	**2.07**	2.21	2.38	2.79	3.17	3.52	3.98	4.28	4.57	**4.66**	4.65	4.46	4.50	4.40	4.13	3.90	3.72	3.40	3.13	2.93	2.67	2.50	3.43

TERMIN-BEOBACHTUNGEN.

Spitzbergen. Green Harbour. **1924.**

$H = 7\,m$, $H_b = 11.4\,m$ — $\varphi = 78^0\ 2'$ N

$C_g = 2.45$ mb bei 1019 mb — $\lambda = 14^0\ 14'$ E

Juli.

Datum.	Luftdruck. 900 oder 1000 + 8	2	7	Luft-Temperatur. Min.	8	2	7	Absolute Feuchtigkeit. 8	2	7	Relative Feuchtigk. 8	2	7	Richtung und Stärke des Windes. 8	2	7	Bewölkung. 8	2	7	Niederschl.	Bemerkungen.
1	05.8	04.1	01.4	**2.1**	5.8	9.0	6.4	5.4	6.9	5.3	79	80	74	SE 1	NW 2	NE 1	1	6	5		
2	94.3	93.4	**92.5**	4.3	6.4	7.2	4.8	6.0	6.3	6.4	85	83	00	NW 1	NW 1	S 1	10●	10	10●	0.0	≡ ● p.
3	93.8	97.9	01.1	3.9	4.7	3.5	3.5	5.8	5.4	5.4	90	92	92	S 3	S 2	S 3	10	10	10	0.3	● p.
4	07.4	09.3	09.2	2.7	3.6	7.4	3.8	**4.3**	4.8	5.0	74	63	83	SE 2	SE 1	NW 3	10	8	7	0.0	
5	09.3	07.8	06.3	3.6	5.6	10.6	8.7	5.2	5.5	5.8	78	59	69	NW 1	NW 1	W 2	10	1	7		
6	07.3	07.2	06.4	4.9	5.6	10.6	8.4	6.2	6.5	6.2	92	69	76	SE 2	NW 5	N 2	10	3	10		
7	06.0	06.6	07.5	5.6	7.0	12.8	10.2	6.2	5.9	6.6	82	54	71	SE 2	SE 3	NW 3	6	0	0		
8	10.1	11.0	10.9	7.0	11.0	**14.2**	13.4	6.4	7.5	7.1	66	62	62	S 1	0	SE 2	0	2	1		
9	09.7	09.0	08.7	8.3	11.8	11.8	11.0	6.7	6.8	7.0	65	66	71	S 1	SE 2	NW 1	6	8	10		
10	12.2	11.9	12.4	7.9	10.0	13.3	10.0	8.4	**8.9**	7.6	92	78	83	SE 2	ESE 1	N 1	10	8	10	5.0	● n.
11	12.1	12.1	11.6	7.6	11.6	13.8	11.0	7.0	7.8	7.0	69	67	72	0	W 2	WSW 3	0	0	1		
12	11.6	12.3	12.2	4.6	8.2	9.0	7.6	6.3	6.4	6.0	78	75	78	S 2	W 3	W 3	9	9	8		
13	13.7	14.9	14.9	6.1	7.4	8.4	6.8	7.2	6.2	5.8	94	76	79	W 1	W 3	W 3	10	8	6		
14	14.3	14.6	15.0	5.9	6.6	7.6	8.8	6.0	6.3	6.3	83	80	75	S 1	S 1	SE 2	10	10	9		
15	10.5	08.8	06.6	6.1	7.2	8.4	5.5	6.3	6.5	6.3	83	80	94	SE 5	SE 2	SE 1	10	10	10		
16	04.5	04.6	04.0	4.2	6.1	7.6	6.2	6.2	6.7	6.7	88	86	94	W 2	SW 2	NW 2	10	10	10	3.2	● n, a.
17	02.9	04.1	05.7	5.7	6.8	8.2	6.1	6.7	6.8	5.7	92	83	82	S 1	NNW 1	NW 4	10	10	10	0.0	
18	09.2	09.4	08.4	4.2	5.6	8.2	8.8	5.1	5.5	6.0	75	68	71	NNW 2	NNE 4	W 1	9	8	8		
19	06.3	06.9	07.2	5.6	6.8	8.1	7.4	5.9	6.6	6.3	80	82	82	S 4	S 6	S 5	10	10	10	7.5	● n.
20	08.3	13.4	16.0	6.0	7.0	5.6	7.3	6.7	6.0	5.4	90	88	70	S 2	NW 3	N 2	10	10	7	1.4	● n.
21	**18.2**	17.3	16.2	4.3	5.0	7.2	5.3	5.1	5.3	5.9	79	70	90	SE 2	S 1	N 3	10	9	10		
22	13.8	11.9	09.6	4.8	6.4	8.0	7.4	5.7	6.1	5.9	80	76	78	S 3	S 3	S 1	7	8	10		
23	05.9	05.9	06.3	5.4	8.0	7.6	7.6	6.1	6.5	5.9	76	83	76	S 1	NW 2	SE 2	7	9	9		
24	08.0	09.5	10.2	6.0	7.2	8.1	6.7	6.4	6.1	5.8	85	76	80	NNW 4	N 3	W 5	4	3	10		
25	10.2	09.3	08.8	4.8	7.1	7.0	7.0	5.6	5.5	6.2	75	74	82	SE 5	SE 4	SE 5	6	7	7		
26	10.5	10.7	11.4	4.8	8.0	9.4	8.4	6.1	6.7	5.7	76	68	69	S 5	S 4	SE 5	2	5	2		
27	14.9	14.7	13.3	5.0	5.8	9.6	7.8	5.4	5.8	5.5	79	65	70	SSE 2	NNW 1	SE 2	10	2	8		
28	10.1	11.2	12.6	5.8	6.6	8.8	10.2	7.0	6.3	5.2	97	75	57	NNW 3	NW 3	NW 3	10	1	0		
29	14.3	14.7	13.5	5.4	10.0	11.8	9.8	5.4	5.1	4.9	59	49	54	N 1	NW 2	W 4	1	0	8		
30	08.9	08.5	08.6	6.0	6.9	7.1	7.1	6.3	6.9	5.7	85	92	76	SE 3	SSE 3	SW 2	10	10	10		
31	11.5	12.5	13.3	5.4	7.0	8.6	7.6	5.9	5.9	5.8	78	70	74	S 1	NW 3	NW 1	9	6	9		
M.	08.9	09.2	09.1	5.3	7.2	9.0	7.8	6.1	6.3	6.0	81	74	77	2.1	2.4	2.5	7.6	6.5	7.5	17.4	

August.

Datum.	Luftdruck. 900 oder 1000 + 8	2	7	Luft-Temperatur. Min.	8	2	7	Absolute Feuchtigkeit. 8	2	7	Relative Feuchtigk. 8	2	7	Richtung und Stärke des Windes. 8	2	7	Bewölkung. 8	2	7	Niederschl.	Bemerkungen.
1	12.3	10.6	08.0	5.5	7.6	7.6	6.5	5.5	5.9	6.4	71	76	88	SE 1	SE 2	SE 4	9	10●	10●		● a, p.
2	03.9	03.3	03.5	6.1	7.0	8.4	7.8	7.0	7.3	6.9	94	90	88	SSE 3	SSE 2	SE 2	10≡	10	8	2.0	≡² n.
3	03.8	01.9	99.6	6.5	7.3	8.0	7.8	7.2	7.7	7.1	94	97	90	0	NW 1	S 3	10≡	10●	10		≡² n, ●² a, p.
4	02.1	06.5	09.5	6.7	7.0	5.0	5.2	6.7	5.7	5.7	90	88	86	SW 3	SW 3	SW 3	10	10	10	9.0	● n; a, p.
5	14.3	13.7	13.2	4.5	5.4	7.8	8.4	5.6	5.5	5.9	83	69	72	SW 3	SW 1	NW 2	9	2	2	0.5	● n.
6	07.2	03.3	03.0	5.0	7.2	9.4	7.8	6.3	6.7	6.5	83	76	82	W 1	SW 4	SE 3	7	10●	10		● 12^{30}-1 p.
7	98.9	98.1	97.3	6.3	6.6	8.8	8.7	7.0	7.4	7.7	97	88	92	SE 1	0	NW 2	10	9	9	0.5	● n, ●² p.
8	91.2	87.3	86.0	6.3	7.8	**11.6**	9.4	7.6	**8.3**	7.7	97	83	88	SE 2	0	0	10≡	10	9●	7.0	● n, ●² p.
9	**85.7**	87.0	88.1	5.2	5.2	5.8	5.4	6.2	5.6	5.6	94	82	83	SE 3	SE 3	SE 4	10●	10●	10	5.0	● n, a.
10	90.9	92.6	93.7	4.9	5.2	4.4	4.6	6.2	5.3	4.7	94	85	75	SE 2	WNW 6	WNW 5	10	10	7	8.0	● n.
11	97.4	99.9	01.3	2.8	4.8	7.6	6.8	5.1	4.3	5.0	79	56	69	0	NW 3	N 2	7	9	8		
12	04.3	05.2	06.4	3.7	3.8	4.6	4.4	3.9	4.5	5.0	66	71	80	NW 4	NW 7	NW 5	4	4	10		
13	08.4	10.0	10.3	3.7	5.8	8.3	6.3	5.0	5.2	4.5	74	63	64	NW 2	W 3	SW 2	9	7	8		
14	10.1	09.0	08.4	4.1	5.6	6.8	5.8	5.1	5.0	5.4	75	69	80	S 4	SW 3	SW 2	9	9	10●	0.0	● n, ● sch. p.
15	09.8	10.6	11.2	4.9	5.6	5.4	5.4	5.4	5.0	4.8	80	76	72	SE 2	W 3	W 2	10●	10	8	0.5	● n.
16	13.9	15.4	16.3	3.0	4.4	5.6	4.0	4.4	4.5	4.3	70	67	70	NW 3	NW 3	SW 3	8	7	5		
17	14.1	12.5	13.8	3.2	6.7	7.3	6.0	4.9	5.0	5.1	67	67	74	SW 3	NW 3	NW 5	4	5	1		
18	17.8	19.7	20.8	4.2	5.5	6.1	6.0	4.0	4.0	4.1	59	58	59	E 3	N 4	N 3	6	3	1		
19	**23.1**	23.0	22.3	0.5	5.6	6.2	6.6	4.6	5.2	4.8	68	74	67	S 1	NW 2	NW 3	3	1	1		
20	20.5	20.3	18.6	1.9	4.2	5.6	5.0	4.6	4.5	5.1	75	67	78	SW 1	N 4	NW 4	8	7	9		
21	13.7	13.6	15.4	3.4	5.6	8.4	8.6	5.1	4.7	4.5	76	57	54	NW 4	NNW 3	NNE 2	4	1	0		
22	16.5	17.0	16.9	1.9	5.6	7.0	5.5	5.1	5.4	5.0	75	72	74	NW 1	W 3	W 3	2	4	8		
23	16.5	15.9	14.4	3.3	5.3	6.4	6.2	5.3	5.7	5.6	80	79	80	S 1	S 2	S 2	10	9	7		
24	14.9	16.0	16.1	3.2	6.0	6.0	4.6	5.5	4.6	4.7	80	66	75	0	NW 3	NW 2	7	10	9		
25	14.7	14.3	13.5	3.0	4.6	5.6	6.4	4.4	4.4	4.7	70	66	65	NW 1	NNW 3	NW 2	9	1	8	0.6	● n.
26	11.5	09.7	07.8	2.8	3.6	6.9	5.2	4.6	4.4	4.8	78	59	72	S 1	SW 3	W 2	3	9	10		
27	05.4	04.2	03.3	3.3	3.6	4.8	5.6	4.4	3.7	**3.5**	76	58	53	N 3	N 3	NNW 3	10●	9	4	0.0	● n, a.
28	04.0	04.1	04.4	2.2	4.2	2.6	2.3	3.8	4.0	4.2	62	72	78	NNW 1	NW 6	WNW 7	10	10	10+	0.0	✱ p.
29	06.3	07.3	07.9	1.3	2.3	2.8	2.8	4.5	4.7	4.6	83	85	80	WNW 2	WNW 3	WNW 5	9●✱	10	10●	0.2	✱ u. ● ✱ n, ● ✱ a, ● p.
30	07.2	04.3	01.2	1.9	2.6	3.0	3.4	4.2	4.2	4.2	75	75	71	WNW 2	WNW 3	NW 3	9	8	5	0.0	● n.
31	99.3	01.7	03.7	**-1.2**	1.4	3.4	1.8	4.0	3.9	4.8	78	66	92	SE 2	SE 2	SE 2	10	10●✱	10●		● ✱ a, ● p.
M.	07.7	07.7	07.6	3.7	5.3	6.4	5.8	5.3	5.2	5.2	79	73	76	1.9	2.9	3.0	7.9	7.6	7.3	33.3	

Spitzbergen. Green Harbour. **1924.**

$H = 7$ m, $H_b = 11.4$ m — $\varphi = 78^0\ 2'$ N

$C_g = 2.45$ mb bei 1019 mb — $\lambda = 14^0\ 14'$ E

September.

Datum.	Luftdruck. 900 oder 1000 + 8	2	7	Luft-Temperatur. Min.	8	2	7	Absolute Feuchtigkeit. 8	2	7	Relative Feuchtigk. 8	2	7	Richtung und Stärke des Windes. 8	2	7	Bewölkung. 8	2	7	Niederschl.	Bemerkungen.
1	07.5	09.3	10.3	1.1	2.9	2.6	2.0	4.9	4.2	3.6	86	75	68		0 WNW	5 WNW 3	4	4	7	1.9	● n.
2	10.9	11.4	12.1	1.2	2.8	3.0	2.4	4.2	4.5	4.4	75	79	80	NW	2 NNW	4 NW 4	10	9	6		
3	15.8	**16.4**	15.9	0.9	1.2	2.8	2.5	4.0	3.9	3.7	80	70	67	NW	4 W	1 NE 3	10	9	9		
4	16.2	15.7	14.5	-1.1	1.6	3.3	2.4	4.0	3.6	3.6	79	61	65	SE	1 NNE	2 NE 2	0	3	10		
5	10.3	08.9	07.9	0.8	1.2	2.8	2.0	3.8	3.7	4.2	75	66	78		0	0 NNE 1	0	10	10		
6	08.0	07.6	06.9	0.1	1.8	2.2	2.0	3.6	4.0	3.5	70	74	67		0 NW	3 NE 3	2	2	1		
7	07.7	07.6	06.4	-2.7	0.0	2.1	2.0	3.7	3.5	3.6	82	67	68	SE	2 N	2 0	9	6	9		
8	05.7	05.4	04.0	0.0	2.2	2.9	2.8	3.8	3.9	3.3	70	70	59		0 NE	4 NE 3	7	9	1		
9	01.8	00.2	99.2	-1.0	-0.2	0.0	-0.3	3.2	3.1	3.1	71	68	68	SE	2 SSE	2 NE 2	0	10	9		
10	96.9	93.9	91.7	-1.4	-0.3	1.6	1.4	3.3	3.5	3.6	74	68	71	ENE	3 NE	4 NNE 3	8	9	8		
11	92.8	94.6	95.0	-2.3	-0.6	2.4	2.0	3.1	3.9	4.0	70	72	75	SSE	1	0 ENE 2	9	3	9		
12	93.9	92.3	89.4	-0.6	2.2	4.6	**5.0**	4.0	4.1	**6.0**	76	66	92	NNE	3 SSW	2 ENE 1	10	10	10●		● abd.
13	**87.8**	88.6	89.0	2.2	3.0	3.7	3.0	5.3	5.6	4.4	94	94	78	NNE	1 ENE	2 NW 2	10	10●	9	1.0	● p.
14	90.5	91.4	91.7	2.1	2.6	3.1	2.0	5.0	4.8	4.6	92	86	86	SE	3 SSE	3 SSE 3	10●	10●	10●	4.0	● n, a, p.
15	93.5	92.8	92.4	0.4	1.8	1.8	0.7	4.7	4.6	4.5	90	88	92		0 N	2 0	10	9	7	0.0	✱ p.
16	92.4	93.2	93.9	-1.2	0.2	1.5	0.4	3.9	4.4	4.5	85	85	94	SSE	2 SSE	2 0	9	10●	8	0.0	● ✱ mtg., p.
17	96.4	97.9	98.7	0.0	0.9	1.2	0.8	4.5	5.0	4.7	92	00	97	SSE	1	0 0	10●	10●	10	2.3	● ✱ n, ● a, ● ✱ p.
18	98.7	99.5	99.7	0.7	1.8	2.4	2.1	5.1	5.3	5.0	97	97	94	SE	2 N	2 0	10	10	10	1.8	
19	01.0	02.1	02.9	0.6	0.8	2.4	0.2	4.2	4.4	4.5	86	80	97	SE	1 S	2 SSE 2	9	8	6		
20	05.5	07.6	09.0	-0.5	1.0	3.0	2.6	4.6	4.8	4.7	92	86	85	SSE	2	0 0	10	10	10		
21	11.8	12.3	12.2	1.0	2.0	3.0	0.6	5.0	3.8	3.3	94	66	68	SSE	1 S	3 SSE 4	8	1	7		
22	11.3	11.5	10.2	-1.4	0.6	1.6	0.0	3.6	4.0	4.2	75	78	92		0 ENE	1 0	9	10	10		
23	08.3	07.9	07.5	-0.9	-0.6	1.6	0.4	2.9	3.4	3.1	67	65	67	SSE	3 SE	2 0	3	8	10		
24	07.9	07.4	05.9	-0.7	0.2	2.4	0.6	3.9	3.8	3.5	83	70	72		0	0 E 1	10	5	6		
25	98.7	98.1	97.9	0.2	2.2	2.3	1.8	4.1	4.4	4.3	75	80	83	SW	1	0 ESE 1	9	9	10		
26	98.6	99.1	98.8	0.4	0.4	1.4	0.4	3.9	4.9	4.5	83	97	94		0	0 0	10✱	10	10	0.8	✱ n, ● ✱ a, p.
27	00.2	02.2	02.6	0.0	0.0	0.0	-1.4	3.8	3.8	3.7	83	83	90	NNE	3	0 NE 1	10	10✱	10	0.4	● ✱ n, a.
28	98.9	97.5	96.3	-5.5	-1.2	-0.6	0.2	3.3	3.6	3.9	78	83	83	SE	4 NNW	1 0	10	10✱	10✱	0.5	✱ a, p.
29	96.2	97.4	98.6	-1.2	-0.8	-0.4	-2.2	4.2	3.8	3.6	97	86	92		0	0 0	10✱	9✱	5	1.6	✱ n, a.
30	03.0	05.4	06.4	**-6.1**	-5.2	-2.8	-5.2	2.8	2.9	**2.6**	92	76	82	SE	2 SE	1 SE 2	0	0	1	0.0	
M.	02.3	02.5	02.2	-0.5	0.8	1.9	1.1	4.0	4.1	4.0	82	78	80		1.5	1.7 1.4	7.5	7.8	7.9	14.3	

Oktober.

Datum.	Luftdruck. 900 oder 1000 + 8	2	7	Luft-Temperatur. Min.	8	2	7	Absolute Feuchtigkeit. 8	2	7	Relative Feuchtigk. 8	2	7	Richtung und Stärke des Windes. 8	2	7	Bewölkung. 8	2	7	Niederschl.	Bemerkungen.
1	06.2	05.1	05.8	-6.4	-5.2	0.0	0.8	2.6	3.6	4.6	84	78	95		0	0 SSE 1	9	10✱	10		● ✱ p.
2	06.3	02.9	03.0	-5.2	2.8	3.4	3.8	4.6	5.2	**5.7**	82	88	95	S	2 SSE	4 SSE 4	10	10●	10	0.7	● ✱ n, ● a, p.
3	99.8	99.1	00.8	2.4	**4.2**	3.4	0.6	**5.7**	5.0	4.1	92	86	84	SE	5 SSE	4 W 3	7	10●	10●	14.0	● sch. a, ● ✱ abd.
4	04.4	09.6	14.7	0.2	1.2	0.9	0.4	4.7	4.5	4.2	93	92	88	NNW	4 NW	3 SSW 1	10●	9	9	6.2	● ✱ a.
5	21.9	26.1	29.1	-3.0	-3.0	-1.0	-2.8	3.5	4.2	3.6	95	97	95	SSE	1 S	2 SSE 1	4	10	10	0.4	
6	34.0	**34.8**	**34.8**	-3.6	-3.4	-2.7	-4.3	3.0	3.1	2.9	82	82	86	SSE	3	0 0	4	6	1		
7	33.8	32.3	30.4	-4.4	-2.4	-1.1	-3.2	3.6	3.8	3.5	93	89	95		0	0 SE 1	9	8	9		
8	26.1	25.0	24.0	-5.5	-5.5	-3.8	-4.2	2.8	3.2	3.3	92	92	97		0	0 0	3	1	1		
9	22.3	19.6	17.0	-5.5	-4.8	-2.0	-1.7	3.1	3.6	3.8	97	90	95		0	0 0	1	0	4		
10	12.4	11.0	10.0	-4.8	0.6	0.5	-1.1	4.8	4.8	4.2	00	00	00		0 NNW	3 SE 2	10●	5	10	0.0	≡ p.
11	10.0	11.3	11.6	-1.7	0.2	0.2	0.2	4.7	4.7	4.7	00	00	00		0	0 0	10✱	10●	10	1.8	✱ n, ● a.
12	11.5	11.7	10.2	0.2	0.3	0.6	0.4	4.7	4.8	4.8	00	00	00		0	0 0	10=	10	10●	0.9	● n.
13	03.1	03.1	04.8	0.3	1.4	2.7	1.9	5.1	5.0	4.8	00	90	92	S	1 SE	4 SE 2	10●	10●	8	4.0	● sch. a, ● p.
14	08.2	10.1	08.6	-0.4	-0.4	-1.2	-1.0	4.5	4.2	4.2	00	00	97		0	0 0	10	10	10	0.6	
15	09.1	09.8	07.6	-2.6	-2.6	-5.8	-6.8	3.0	2.5	2.1	79	84	74	WNW	5 WNW	3 W 3	10✱	10✱	9	0.9	✱ von 11 a an.
16	05.0	04.8	01.3	-7.2	-7.0	-6.0	-5.6	2.1	2.3	2.3	77	78	76		0 WNW	3 WNW 3	10	9	10✱	1.9	● ✱ u. ✱ n.
17	92.3	91.8	91.5	-7.0	-4.0	-4.5	-5.2	3.2	3.1	2.8	95	95	88		0 WNW	1 N 3	10✱	10✱	10✱	5.0	✱ n, p.
18	00.8	05.7	09.0	-9.2	-9.2	-12.0	-10.5	1.8	**1.2**	1.3	76	64	64	NE	3 NE	3 W 2	9	3	8	6.5	✱ n.
19	09.1	04.1	94.9	**-14.8**	-11.8	-9.3	-9.3	1.3	1.4	2.0	67	64	90	ENE	2 NE	3 NE 8	7	9	10		
20	96.1	98.4	98.0	-11.8	-3.0	-6.6	-6.2	2.6	1.5	1.6	70	51	55	SE	6 SE	1 0	10	2	9		
21	92.3	92.0	90.2	-7.6	-2.6	-3.6	-4.3	2.8	2.6	3.0	73	73	90	SSE	2	0 SE 2	9	10	10✱	5.0	✱ n, p, abd.
22	87.9	**86.7**	89.2	-5.4	-3.8	-3.2	-3.0	2.3	3.2	3.3	65	88	89	SE	2 SE	3 S 6	8	7	10	0.8	✱ a.
23	00.1	00.9	00.4	-3.8	-1.7	-1.9	-1.8	3.6	3.3	3.3	89	84	84	S	4 SE	4 SE 4	10✱	10✱	10✱	7.5	✱ n, a, ✱ sch. abd.
24	95.8	92.5	90.1	-5.9	-2.4	-2.2	-5.2	3.3	3.3	2.3	84	85	76	SE	3 SE	3 0	10✱	4	3	0.6	✱ abd.
25	96.7	01.6	03.6	-5.9	-5.8	-8.2	-5.4	2.3	2.0	2.3	76	82	74		0 SE	2 SSE 2	2	4	7	0.0	
26	00.4	96.7	94.1	-8.8	-0.3	0.4	1.2	3.4	3.9	4.5	76	83	90	SSE	4 SE	4 SSE 3	10✱	10●	10✱	0.0	● ✱ a, ✱ p.
27	92.7	92.7	93.0	-1.8	-1.8	-4.0	-4.2	3.7	2.7	2.4	93	79	71		0 WNW	1 0	10✱	10✱	10	2.2	✱ n, p.
28	91.8	93.8	95.5	-6.4	-6.0	-6.8	-8.8	2.3	1.7	1.5	80	61	64	ENE	1 NNE	4 NNE 3	7	3	0	0.1	
29	98.1	97.9	96.2	-12.0	-12.0	-10.9	-9.8	1.4	1.5	1.9	74	74	84	NE	1 SE	2 SE 1	1	10	3		✱ p.
30	94.5	95.1	95.1	-12.0	-9.6	-8.4	-9.0	1.8	2.1	1.9	84	83	79	SE	1	0 ENE 1	10	10✱	4	0.0	✱ a, p.
31	97.1	98.9	99.5	-10.0	-10.0	-10.0	-11.3	1.5	1.6	1.6	71	76	83	NE	2 ENE	2 ESE 2	10	10✱	3	2.9	✱ n, a, p.
M.	05.2	05.3	05.0	-5.5	-3.5	-3.3	-3.7	3.2	3.2	3.2	85	84	86		1.7	1.9 1.9	8.1	7.7	7.7	62.0	

$H = 7$ m, $H_b = 11.4$ m

$C_g = 2.45$ mb bei 1019 mb

$\varphi = 78^0\ 2'$ N

$\lambda = 14^0\ 14'$ E

November.

Datum.	Luftdruck. 900 oder 1000 + 8	2	7	Luft-Temperatur. Min.	8	2	7	Absolute Feuchtigkeit. 8	2	7	Relative Feuchtigk. 8	2	7	Richtung und Stärke des Windes. 8		2		7		Bewölkung. 8	2	7	Niederschl.	Bemerkungen.
1	00.1	00.6	00.4	-12.4	-9.8	-9.4	-9.2	1.6	1.6	1.4	71	71	63	SE	2	SE	1	SE	1	10	10	6	1.3	
2	99.2	99.1	98.7	-13.1	-12.8	-14.4	-13.4	1.2	1.0	1.1	70	67	68		0		0	SE	1	7	5	2		
3	99.4	94.8	93.8	-14.5	-10.7	-12.4	-12.4	1.3	1.2	1.2	65	67	70	NE	2	ENE	1	SE	2	9	3	9		
4	93.3	93.4	94.2	-14.7	-14.7	-14.4	-15.3	1.0	1.1	1.1	71	72	76	SE	2	SE	1		0	1	3	1		
5	96.3	96.4	96.0	-17.7	-16.0	-13.0	-9.9	1.0	1.2	1.8	76	72	82		0	SE	1	NW	3	1	9	3		
6	96.8	98.1	98.4	-16.0	-9.8	-9.0	-10.5	1.6	1.6	1.6	76	67	77	NW	4	NNW	5	N	3	8	10	10		✱ p.
7	01.8	05.8	07.5	-11.0	-10.9	-11.4	-14.6	1.4	1.5	1.1	68	74	76	NNE	1	SE	1	ESE	3	5	7	1	0.0	✱ n.
8	92.8	88.0	88.7	-14.8	-7.0	-3.1	-2.1	2.5	3.0	3.2	92	82	80	SE	5	SE	6	SSE	3	10	10	9		✱ u. ● ✱ p.
9	99.8	06.3	09.2	-7.0	-3.9	-7.3	-7.2	2.6	2.3	2.2	76	85	83	NE	3		0	SE	2	10	1	10	1.5	
10	07.1	07.3	06.8	-8.0	0.3	2.2	**2.6**	4.3	4.7	**4.9**	93	88	90	SE	6	SSE	3	S	2	10✱	10●	10●	4.8	✱ n, ◍ a, p.
11	12.6	17.4	19.9	-1.0	-1.0	-1.0	-1.2	3.6	2.9	3.4	84	67	79	WNW	1	NNW	1		0	7●	9	10	5.3	◍ n.
12	18.6	15.9	11.9	-2.0	-1.8	-1.6	-0.8	3.7	3.8	4.1	92	93	95		0		0		0	10✱	10✱	10●	0.2	✱ n, a, ◍ ✱ u. ◍ p.
13	07.6	06.6	05.9	-2.2	0.9	1.0	0.8	4.1	4.1	3.9	83	83	80	S	4	S	3	SSE	4	8	10●	10✱	8.4	● n, a, ● ✱ p.
14	11.4	10.3	05.0	-6.2	-6.2	-7.6	-7.4	2.4	2.1	2.3	83	80	86	NW	3		0	NE	1	10	10	10✱	0.1	✱ a, p.
15	91.2	91.3	95.9	-8.1	1.2	-4.7	-7.8	4.3	3.1	1.9	86	80	74	ENE	5	WNW	6	NW	4	10●✱	10	10✱	7.1	◍ ✱ n, a, ✱ p.
16	06.3	09.4	09.8	-10.4	-10.4	-9.6	-12.6	1.6	1.7	1.3	76	76	73	NW	6	NNW	3		0	0	2	2	1.2	
17	07.9	01.6	93.6	-13.3	-12.2	-1.4	-3.1	1.4	2.8	2.7	77	68	73		0	ENE	1	SE	3	10	10	10		
18	76.0	75.5	76.1	-12.2	1.5	-2.5	-2.8	3.4	3.1	3.3	66	82	88	E	5	ENE	5	NE	4	10	10✱	10✱	0.0	✱ n, a, p.
19	85.8	91.1	92.6	-3.4	-2.2	-3.1	-4.2	3.3	3.3	3.1	84	90	93		0		0	SE	2	7	10	4	4.1	✱ abd.
20	89.7	84.5	79.3	-5.3	-1.8	-1.8	-1.9	3.3	3.1	3.7	84	76	92		0		0		0	10	10	10✱	0.0	✱ abd.
21	**71.9**	72.9	73.9	-2.2	-0.2	-1.4	-0.3	3.8	2.9	2.9	83	71	65		0		0	ENE	1	10	8	5	0.0	
22	75.6	76.3	78.3	-3.5	-3.5	-4.6	-6.8	2.9	2.1	1.9	80	64	70	ENE	6	ENE	2	ENE	5	10	10	3	0.2	✱ n.
23	83.5	87.3	91.7	-7.0	-6.2	-6.4	-7.2	1.9	1.8	1.7	64	63	63	NE	1	NE	6		0	5	3	3		
24	04.7	13.6	16.2	-12.7	-12.7	-16.0	-15.6	0.8	0.7	0.7	50	49	53	ESE	1	SE	2	SE	1	1	1	2		
25	18.7	18.8	18.8	-16.7	-12.0	-14.0	-15.4	1.2	1.0	0.8	67	61	57	N	2		0		0	4	7	0		
26	18.8	19.0	19.2	-17.0	-15.0	-16.0	-16.6	0.9	0.9	0.8	60	66	62		0	NNE	1	ESE	1	10	9	9✱		
27	20.6	20.7	20.2	-19.3	-18.9	-19.0	-19.2	0.7	0.7	0.7	63	63	66	SSE	1	SE	1	SE	2	9	9	3	0.0	
28	19.9	20.9	21.7	-19.8	-18.8	-18.6	-18.8	0.7	0.6	0.6	64	60	61	NE	2	NE	3	NNE	3	1	0	0		
29	22.3	24.4	25.2	-19.2	-17.6	-18.2	-19.4	0.7	0.7	0.7	60	70	71		0		0	SE	1	1	0	0		
30	27.7	29.5	**30.5**	**-20.2**	-20.2	-21.3	-21.8	0.6	**0.5**	**0.5**	64	63	63	SE	2	SE	1	SE	1	0	0	0		
M.	01.9	02.6	02.7	-11.0	-8.4	-8.7	-9.1	2.1	2.0	2.0	74	72	74		2.1		1.8		1.8	6.8	6.9	5.7	34.2	

December.

Datum.	8	2	7	Min.	8	2	7	8	2	7	8	2	7	8		2		7		8	2	7	Niederschl.	Bemerkungen.
1	**29.7**	29.6	29.5	**-22.4**	-21.0	-19.0	-19.4	0.7	1.0	0.7	72	76	72	SE	2	SE	1		0	0	0	0		
2	27.7	26.9	26.3	-21.0	-18.8	-17.2	-15.3	0.8	0.8	0.9	77	70	64		0		0		0	0	0	4		
3	20.6	13.4	09.4	-19.0	-11.6	-3.6	-1.3	1.4	2.7	3.5	72	78	84		0	SSE	6	SSW	5	3	8	10✱		✱ p.
4	06.0	09.1	10.3	-11.6	-7.0	-9.6	-10.6	1.9	1.5	1.6	68	65	77	W	4	NW	4	NNE	2	10	3	7	2.1	✱ n.
5	06.9	03.2	03.2	-11.5	-10.2	-10.0	-7.0	1.8	1.9	2.5	84	89	92	SSE	1		0	W	1	10✱	10✱	10✱	0.4	✱ n, a, p.
6	99.9	97.4	95.2	-10.2	-3.2	-2.4	0.4	3.4	3.6	4.4	93	93	92		0	NNW	1	SSE	4	10✱	10✱	10✱	6.0	✱ n, a, p.
7	95.6	95.8	95.3	-3.2	1.4	0.8	-0.2	4.3	4.2	4.2	86	86	93	SSE	4	SE	1		0	10	10●	10●✱	4.0	◍ ✱ u. ● n, ◍ ✱ p.
8	88.1	76.8	68.5	-2.4	-2.4	-1.7	0.0	3.6	3.0	3.6	93	74	77		0	NE	6	ENE	1	4	10	10	0.0	✱ p.
9	71.8	73.0	74.3	-2.4	0.6	-0.4	-1.5	4.4	3.9	3.7	90	88	90	SSE	3	SSE	4	SE	3	9	9	10	7.8	◍ n, ✱ a.
10	78.7	81.4	82.2	-4.3	-4.3	-4.6	-5.2	2.9	2.7	2.6	86	85	83	SE	2	SE	3	SE	3	10	10	9	0.2	
11	80.9	81.1	82.7	-10.0	-10.0	-8.6	-9.8	1.8	1.9	1.7	84	80	78	SE	2	NE	2		0	3	10✱	9		✱ a, p.
12	93.7	98.8	95.6	-10.1	-7.4	-8.6	-8.8	2.0	1.7	1.7	77	72	74	N	4		0	SE	3	10	10	10	3.1	✱ n.
13	71.1	**64.3**	66.5	-9.0	-3.4	-0.4	-3.4	3.3	3.7	3.1	92	84	88	SSE	4	SE	5	NW	6	10✱	10✱	10✱	2.0	✱ n, a, p.
14	85.3	90.1	92.1	-11.1	-11.0	-10.4	-11.0	1.4	1.3	1.3	68	64	64	NW	4	NW	4	NNW	1	9	10	10	1.5	✱ p.
15	96.5	99.0	99.8	-13.0	-13.0	-12.8	-14.0	1.4	1.5	1.3	83	85	84		0	SSE	1	SE	2	10✱	10✱	8	3.0	✱ n, a.
16	99.5	98.9	97.1	-17.0	-16.4	-16.8	-16.4	1.1	1.1	1.1	84	86	84	S	2		0		0	4	3	10	1.0	
17	93.8	92.6	92.2	-18.0	-9.8	-10.0	-11.0	1.6	1.4	1.3	70	63	64		0	NE	4	SSE	2	10	10	3		
18	95.4	97.0	99.4	-17.2	-14.2	-10.6	-15.0	1.2	1.3	1.1	80	62	76		0	S	1		0	9	7	6		
19	02.6	05.2	07.3	-15.0	-12.0	-13.4	-13.8	1.3	1.1	1.1	70	68	68	SE	3	SE	2		0	9	4	4		
20	11.1	11.6	09.7	-14.2	-13.2	-13.2	-11.0	1.3	1.3	1.8	77	76	86	SE	2	SE	1		0	10	10	10✱		✱ p.
21	03.9	01.0	99.7	-13.9	-5.4	-6.4	-8.0	2.7	2.5	2.1	89	88	85	SSE	3	W	1		0	10✱	10✱	8✱	12.2	✱ n, a, p.
22	95.3	01.7	04.7	-15.9	-5.0	-7.2	-8.0	2.6	1.9	2.0	84	72	77	S	4	N	3		0	10✱	4	10	2.3	✱ a.
23	97.1	94.2	93.7	-10.5	-1.9	2.4	**3.0**	3.6	4.5	**4.7**	89	83	84	SSE	6	SSE	7	SSE	5	10	10	10●	1.0	● p.
24	87.7	82.1	78.7	-1.9	2.4	1.7	1.2	3.9	3.7	4.4	72	71	88	SSE	4	SE	3	SSE	6	2	10	10●✱	6.0	● n.
25	88.4	93.8	97.8	-4.0	-4.0	-3.2	-4.8	2.8	2.6	2.3	83	71	71	W	4	W	4	SSW	2	10✱	4	3	0.3	✱ n.
26	99.3	98.1	97.3	-12.0	-12.0	-12.3	-12.9	1.5	1.6	1.6	84	89	92		0		0		0	0	2	0	0.0	
27	96.6	97.1	97.5	-13.2	-8.2	-6.8	-6.3	2.1	2.3	2.4	85	82	83		0		0	SE	2	10	8	10		
28	99.4	00.4	00.6	-12.4	-12.4	-12.2	-13.3	1.3	1.1	1.0	73	64	59		0	ESE	3	E	5	0	1	0		
29	97.0	94.9	93.2	-15.0	-14.2	-17.3	-19.1	0.8	0.7	**0.6**	54	57	60	SSE	2	SE	3	SE	2	1	4	9		
30	88.5	87.0	85.7	-20.2	-18.8	-18.3	-20.2	0.7	0.8	0.7	63	71	77	SE	2	SE	2	SE	2	10✱	9	0	0.0	✱ mg.
31	85.1	86.8	88.1	-20.2	-18.0	-18.0	-19.4	0.8	0.9	0.8	76	79	79		0		0		0	0	4	4		
M.	96.6	96.2	95.9	-12.3	-9.2	-8.7	-9.1	2.1	2.1	2.1	79	76	79		2.0		2.4		1.8	6.9	7.2	7.2	52.9	

$H = 7$ m, $H_b = 11.4$ m
$C_g = 2.45$ mb bei 1019 mb

$\varphi = 78^0\ 2'$ N
$\lambda = 14^0\ 14'$ E

Januar.

Datum.	Luftdruck 900 oder 1000 + 8	2	7	Luft-Temperatur. Min.	8	2	7	Absolute Feuchtigkeit. 8	2	7	Relative Feuchtigk. 8	2	7	Richtung und Stärke des Windes. 8		2		7		Bewölkung. 8	2	7	Niederschl.	Bemerkungen.
1	90.2	90.4	90.0	-20.8	-20.8	-21.0	-19.3	0.7	0.7	0.9	80	83	84		0		0		0	0	5	9		
2	86.6	84.3	82.6	-21.5	-19.0	-18.0	-17.7	0.9	1.0	1.0	84	84	86		0		0		0	1	2	4		
3	78.4	77.0	76.5	-19.0	-14.6	-14.0	-15.0	1.3	1.4	1.3	88	89	88		0		0		0	1	5	3		
4	76.2	79.5	82.7	-15.2	-6.6	-7.8	-8.8	2.1	1.9	1.7	76	74	73	NNE	7	NE	6	ENE	4	0	2	2		
5	91.0	94.5	97.1	-10.3	-10.3	-11.2	-17.0	1.6	1.5	1.0	77	76	83	E	5	SE	2		0	3	2	2		
6	99.6	99.9	99.1	-20.4	-19.8	-19.2	-18.8	0.8	0.9	0.8	84	82	80		0		0	S	2	1	2	9		
7	92.8	92.4	93.3	-19.9	-6.8	-8.0	-7.2	1.9	2.2	2.1	68	89	80	SW	2		0	NE	1	10	10*	7		* a, p.
8	97.1	98.2	98.4	-12.6	-12.6	-12.1	-12.4	1.4	1.5	1.5	82	84	82	NE	3	ENE	4	NE	4	10	10*	10*	3.0	* p.
9	98.8	98.9	98.1	-14.3	-14.2	-16.0	-22.0	1.3	1.2	0.7	85	85	84		0	S	1	S	1	10*	9	8	2.1	* n.
10	89.2	92.9	95.6	**-22.4**	-3.3	-7.6	-9.1	2.7	1.9	1.6	76	73	70	S	6	N	5	NNW	3	10*	7	8	1.2	
11	98.6	96.6	88.9	-12.5	-12.5	-15.0	-9.6	1.5	1.2	1.4	80	82	62		0		0	S	4	8	9	10		
12	64.3	54.6	53.1	-15.5	-5.4	-4.4	-3.0	2.7	3.1	**3.3**	89	95	89	S	6	S	8	W	3	10	10*	10		* a, p.
13	67.8	76.5	82.5	-10.2	-10.2	-12.2	-11.7	1.7	1.3	1.3	77	76	70	N	7	N	7	NNW	6	10	10	4	3.0	
14	90.1	90.4	84.9	-15.7	-15.7	-20.9	-20.4	0.8	**0.6**	**0.6**	62	66	65	NE	3	S	3	S	2	8	3	3		
15	58.3	50.5	**49.5**	-21.4	-12.2	-10.2	-8.0	1.4	1.9	2.2	79	86	88	E	6	E	3	NE	5	10	10*	10*		* a, p.
16	65.5	69.6	72.2	-13.6	-13.6	-14.8	-15.0	1.2	0.9	0.9	78	66	63	WNW	4	WNW	2	WSW	2	10	10	10*	2.0	
17	76.3	82.9	85.7	-15.5	-11.8	-12.4	-13.8	1.3	1.4	1.2	71	76	74	S	2	WSW	2	S	2	8	10*	10*	10.0	* n, a, p.
18	68.0	61.9	66.2	-14.1	-9.1	-8.4	-9.4	2.0	2.1	2.0	88	84	90	S	2	ENE	5	N	9	10*	10	7	3.2	* n.
19	77.6	80.0	83.1	-13.4	-13.4	-14.8	-12.8	1.3	1.1	1.3	78	73	76	NNW	5	NW	5	NNW	7	7	10	10	0.0	* sch. a, * p.
20	96.4	00.1	99.5	-14.8	-11.4	-11.2	-12.6	1.5	1.5	1.3	78	76	72	NNE	5	N	4	NE	2	3	9	5	6.2	* n.
21	04.4	11.0	13.5	-14.5	-12.8	-12.5	-12.0	1.2	1.4	1.5	68	76	77	SE	1	S	3	ESE	2	10	10	6		
22	96.3	91.2	94.1	-13.1	-5.8	**1.3**	-5.3	2.8	**3.3**	2.3	92	65	76	S	5	SW	4	W	6	10	10	10*		* a, p.
23	90.3	84.6	90.5	-7.8	-7.8	-8.6	-8.8	2.1	2.1	1.9	82	86	84	E	1	ENE	3	NW	6	10	9	3	2.5	* a.
24	06.5	06.2	04.4	-14.3	-13.8	-14.8	-16.2	1.2	1.1	1.0	76	74	77	NNW	2	ENE	3	NE	3	10	10*	9*	2.0	* a, p.
25	14.8	20.9	**23.8**	-21.0	-17.0	-17.6	-16.0	1.1	0.9	1.0	86	77	78	N	6	NNE	5	NNW	6	10	3	0	0.1	
26	20.5	15.4	11.5	-22.3	-20.6	-19.7	-19.6	**0.6**	0.8	0.8	71	80	82		0		0		0	10	10*	10*		* a, p.
27	06.1	05.2	04.3	-20.6	-11.6	-10.6	-9.4	1.7	1.8	1.9	88	89	83		0		0	SSE	4	10*	10*	10*	3.9	* n, a, * sch. p.
28	00.2	97.9	96.0	-11.6	-7.1	-6.2	-5.6	2.2	2.7	2.8	82	92	93	S	3		0		0	10	10*	10*	2.5	* n, p.
29	97.1	99.6	99.2	-7.1	-1.2	-6.8	-6.6	3.1	2.1	2.4	73	76	83	NW	1		0		0	7	3	10	2.5	* n.
30	97.3	96.8	96.0	-7.6	-6.6	-9.8	-6.8	2.5	2.0	2.6	89	92	92		0		0		0	10	8	10		
31	94.6	94.6	92.9	-9.8	-5.6	-5.2	-8.2	2.7	2.9	2.3	92	93	90		0		0		0	10	10	1		
M.	90.0	90.1	90.5	-15.2	-11.4	-11.9	-12.2	1.6	1.6	1.6	80	81	80		2.6		2.4		2.7	7.6	7.7	7.1	44.2	

Februar.

Datum.	Luftdruck 900 oder 1000 + 8	2	7	Luft-Temperatur. Min.	8	2	7	Absolute Feuchtigkeit. 8	2	7	Relative Feuchtigk. 8	2	7	Richtung und Stärke des Windes. 8		2		7		Bewölkung. 8	2	7	Niederschl.	Bemerkungen.
1	92.1	93.5	93.8	-9.7	-9.0	-7.2	-8.4	2.1	2.3	1.9	90	86	79		0	NE	5	ENE	4	1	2	2		
2	95.5	94.5	94.0	-13.8	-13.8	-19.0	-20.2	1.4	0.8	0.7	85	78	77		0		0		0	3	1	8		
3	92.5	94.1	95.6	-22.5	-12.0	-12.4	-12.8	1.2	1.0	0.9	66	57	54	ESE	4	SE	3	ESE	5	1	1	0		
4	99.0	98.6	96.0	-15.4	-15.4	-19.2	-21.5	0.6	0.6	0.7	42	60	79	SE	3	SE	1		0	0	1	1		
5	82.9	81.0	79.1	-21.5	-19.1	-20.8	-20.2	0.8	0.7	0.7	78	76	79	NE	4	NE	3	NE	4	10	5	10		
6	73.7	68.4	65.1	-22.0	-20.2	-17.6	-17.4	0.8	0.9	1.0	80	82	78		0	NNE	4	NE	2	10*	10*	9*	2.4	* n, * sch. a.
7	**62.3**	67.9	71.2	-23.2	-21.1	-11.2	-11.4	0.7	1.6	1.3	76	83	68		0	SSE	3	SE	4	4	9	9	2.4	
8	73.7	77.4	79.1	-21.1	-8.6	-8.8	-7.2	1.8	1.6	1.7	73	68	62	SE	5	SSE	3		0	3	7	4		
9	80.5	82.2	82.6	-11.6	-5.2	-5.2	-5.4	2.0	2.1	2.0	65	68	67	E	4	E	4	NE	3	4	10	8		
10	84.3	85.8	86.4	-5.8	-2.7	-4.0	-4.6	3.0	2.9	3.0	79	85	92	NE	4	NE	4	NE	6	10	10	10	0.0	* mg.
11	88.2	91.2	91.1	-4.8	-3.8	-3.8	-3.8	2.6	2.3	2.4	76	65	71	ENE	5	ESE	4	ENE	4	10*	8	4	0.3	* n.
12	91.8	93.1	93.1	-4.4	-3.6	-6.0	-4.8	2.6	2.5	2.6	74	84	82		0		0	E	1	10	9	3		
13	92.5	92.6	93.0	-6.5	-1.2	**-1.1**	-2.1	2.9	2.7	**3.3**	68	65	85	ENE	2	ESE	2	NE	4	9	9	10		* p.
14	94.5	97.7	99.8	-3.5	-3.0	-3.8	-4.2	2.5	2.3	2.2	67	65	65	NE	5	NNE	5	NE	4	10	3	4	0.0	* n.
15	03.9	06.6	08.1	-5.2	-5.2	-6.1	-6.7	2.5	2.5	2.4	80	83	86	ENE	4	NE	3	NE	2	10	10	5		≡, * abd.
16	12.3	14.7	16.4	-8.3	-8.3	-9.2	-10.0	2.2	2.1	2.0	92	90	92		0	SE	1	SE	1	9	9	5	0.0	
17	20.3	21.8	22.8	-12.2	-11.0	-11.1	-14.9	1.8	1.7	1.3	92	86	86	S	2	SE	1		0	7	3	1		
18	24.5	24.5	24.2	-17.1	-12.9	-9.0	-10.0	1.5	2.1	1.9	89	89	90		0		0		0	9	9	2		
19	25.1	26.2	26.1	-13.0	-12.0	-17.3	-18.2	1.2	0.9	0.9	64	77	76	SE	2	SSE	1	SE	1	0	1	1		
20	25.3	25.4	24.7	-20.4	-20.4	-20.9	-20.4	0.7	0.6	0.6	73	70	71	S	2	SE	2	SE	1	1	1	9		
21	22.6	22.0	20.3	-21.3	-21.2	-22.8	-22.2	0.7	0.6	0.7	72	73	79	SSE	1		0	SSE	1	1	2	2		
22	15.4	14.8	13.8	-22.8	-15.8	-16.4	-17.4	1.0	1.0	1.0	72	77	78	SE	1	S	1	SE	2	8	9	7		
23	10.8	11.0	10.2	-18.8	-18.2	-23.0	-11.2	1.0	0.6	1.6	84	84	84	SSE	2	SE	2	NNW	4	9	2	2	0.1	
24	19.0	21.6	23.6	-23.8	-17.7	-17.4	-15.4	0.9	1.0	1.0	79	83	72		0	SSE	1	N	4	5	10*	1		
25	27.9	**28.3**	**28.3**	-24.5	-24.5	-23.2	-25.0	**0.5**	0.6	**0.5**	82	82	82		0	SE	1	SE	2	1	1	2	0.0	
26	25.9	24.9	23.2	**-25.8**	-20.0	-16.1	-14.3	0.8	1.1	1.3	82	82	83	SSE	2	SSE	2		0	9	6	10		* 6 p,
27	17.5	18.1	19.6	-20.0	-10.2	-9.7	-12.0	2.0	1.9	1.5	92	84	80		0	NE	3	NE	3	10	10	8	5.5	* n, p.
28	21.7	22.4	22.2	-19.7	-19.7	-18.6	-16.0	0.8	0.9	1.2	84	83	85		0		0	SSE	1	3	9	10	1.4	* p.
M.	02.7	03.6	03.7	-15.7	-12.7	-12.9	-12.8	1.5	1.5	1.5	77	77	78		1.8		2.1		2.2	6.0	6.0	5.2	12.1	

$H = 7$ m, $H_b = 11.4$ m

$C_g = 2.45$ mb bei 1019 mb

$\varphi = 78^0\ 2'$ N

$\lambda = 14^0\ 14'$ E

März.

Datum.	Luftdruck. 900 oder 1000 + 8	2	7	Luft-Temperatur. Min.	8	2	7	Absolute Feuchtigkeit. 8	2	7	Relative Feuchtigk. 8	2	7	Richtung und Stärke des Windes. 8	2	7	Bewölkung. 8	2	7	Niederschl.	Bemerkungen.
1	21.1	18.7	16.3	-21.4	-13.1	-9.3	-7.6	1.5	1.7	2.1	88	76	78	SSE 2	E 1	S 4	9	4	3	0.1	✱ n.
2	11.5	11.8	11.5	-13.2	-5.6	-6.4	-5.8	2.3	2.0	2.0	78	70	67	SE 5	SE 4	SE 3	9	5	3		
3	06.1	03.4	99.5	-7.2	-4.6	-4.3	-3.0	2.4	2.5	2.9	73	73	79	SSE 5	SE 5	SE 4	9	8	10		
4	01.2	03.7	06.1	-4.6	-1.8	-2.6	-4.6	2.6	2.5	2.3	65	66	71	SE 4	SE 4	SE 3	10	9	3		
5	07.9	09.9	13.2	-5.8	-5.8	-7.0	-8.8	2.4	1.8	1.4	80	66	62	SSE 3	SE 2	ESE 3	10	3	2	0.2	✱ mg.
6	19.4	20.6	20.7	-14.6	-14.6	-14.4	-14.6	0.9	0.9	1.0	62	59	63	SE 3	SW 2	E 4	7	9	10		
7	19.8	21.4	22.8	-15.7	-14.3	-14.5	-12.8	1.0	0.9	1.0	66	62	62	NE 3	E 5	ENE 5	10*	4	5	0.0	
8	27.7	29.1	29.7	-14.6	-13.0	-12.0	-13.6	1.0	1.1	0.8	59	59	50	NNE 2	E 2	0	5	7	1		
9	28.4	28.1	27.4	-18.4	-18.4	-19.0	-21.8	0.7	0.7	**0.5**	62	65	67	0	0	0	8	4	1		
10	28.5	30.0	30.8	-23.6	-23.0	-18.6	-19.0	**0.5**	0.7	0.8	74	67	76	0	SE 1	SE 1	7	10	10		
11	32.6	33.8	33.3	-23.2	-16.6	-15.1	-18.4	1.1	1.2	0.9	86	83	80	SSE 1	SE 1	0	10*	8*	7	0.7	✱ n, a.
12	27.4	26.2	27.1	-20.3	-5.6	-3.6	-1.8	2.7	2.8	3.6	88	80	90	SSE 9	SSE 9	SSE 8	10*	10	10	2.4	✱ n.
13	32.7	**34.3**	**34.3**	-5.6	**-0.6**	-2.0	-4.6	**3.7**	3.3	2.5	86	82	76	S 6	S 4	SE 3	10*	6	6	1.0	✱ n.
14	**34.3**	33.6	32.7	-9.9	-7.6	-9.0	-12.1	2.0	1.8	1.3	76	76	71	S 3	SSE 2	SE 1	8	8	2		
15	30.1	29.9	29.4	-13.2	-7.7	-6.7	-5.6	1.7	1.9	2.0	66	70	65	0	SSW 2	SSE 2	9	1	2		
16	26.5	24.7	22.7	-8.0	-7.2	-6.2	-9.8	2.2	1.9	1.5	84	65	67	SSE 5	SSE 4	S 2	1	2	1		
17	17.3	13.2	11.0	-10.8	-7.8	-4.7	-4.2	2.0	2.4	2.2	79	74	67	NE 2	SE 6	SE 5	7	4	7		
18	04.3	01.0	00.5	-7.8	-3.8	-2.7	-4.0	2.2	2.4	2.1	64	64	62	SE 3	ESE 4	E 3	5	3	3		
19	04.0	05.9	07.9	-6.6	-6.6	-7.8	-9.6	1.7	1.5	1.3	61	59	57	NNE 4	E 5	NE 5	2	1	0		
20	08.3	09.0	10.5	-17.3	-16.1	-15.2	-17.3	1.0	1.1	1.0	78	77	86	0	0	SE 2	2	3	3		✱ a, p.
21	13.9	14.1	13.1	**-23.8**	-21.7	-18.0	-20.1	0.8	1.0	0.8	88	86	86	E 2	SE 1	SE 1	1	1	2	0.0	
22	08.7	07.2	06.8	-23.1	-19.1	-15.3	-16.6	0.9	1.4	1.0	86	95	82	0	SE 1	0	7	5	5		
23	08.3	11.2	13.6	-19.1	-15.8	-15.4	-16.9	1.0	1.0	1.0	78	73	78	0	SSE 2	SE 1	10	8	2		
24	18.4	19.2	19.2	**-23.8**	-21.7	-17.6	-21.8	0.7	0.9	0.7	84	77	84	0	SSE 2	SE 2	0	0	2		
25	20.1	20.8	20.4	-21.8	-18.8	-16.5	-20.7	1.0	1.0	0.8	88	80	84	S 1	SSE 2	SE 1	1	6	10		
26	18.4	15.6	11.8	-21.4	-16.6	-7.3	-6.7	1.2	2.0	2.2	89	74	79	S 1	SE 4	SE 6	10	10	9		✱ 8-9 a.
27	14.8	16.8	15.8	-16.6	-7.3	-8.6	-9.8	2.2	2.0	2.0	84	84	88	NE 3	ESE 2	E 2	9	9	9	0.4	
28	16.9	17.6	17.7	-11.8	-8.6	-3.8	-6.6	2.2	2.9	2.0	90	82	72	0	ENE 1	S 3	10	9	4	0.8	✱ n.
29	19.5	19.6	19.6	-10.2	-7.4	-5.0	-6.8	2.3	2.6	2.5	88	83	90	0	0	SSE 1	9	9	9		✱ sch. a, ✱ p.
30	12.0	07.8	02.6	-7.8	-5.8	-3.7	-6.1	2.4	2.5	2.5	79	72	86	NW 1	0	NE 3	9	9	10	0.1	✱ p.
31	91.8	89.2	**89.0**	-8.8	-8.4	-8.6	-9.8	1.8	1.9	1.5	73	76	67	NE 4	NE 4	NE 5	8	10	10	0.0	✱ a.
M.	17.2	17.0	16.7	-14.5	-11.1	-9.7	-11.0	1.7	1.8	1.6	78	73	74	2.3	2.6	2.7	7.2	6.0	5.2	5.7	

April.

Datum.	Luftdruck. 900 oder 1000 + 8	2	7	Luft-Temperatur. Min.	8	2	7	Absolute Feuchtigkeit. 8	2	7	Relative Feuchtigk. 8	2	7	Richtung und Stärke des Windes. 8	2	7	Bewölkung. 8	2	7	Niederschl.	Bemerkungen.
1	90.1	93.3	96.0	-13.3	-12.8	-13.4	-15.4	1.3	1.3	1.0	78	77	74	NE 5	NE 6	ENE 4	10	9	2	0.0	
2	01.8	06.3	08.1	-17.8	-17.1	-16.6	-17.0	0.8	1.0	0.7	71	67	59	NE 3	NE 4	NNE 3	2	6	4		
3	11.4	11.7	11.8	-19.7	-18.4	-17.6	-22.0	0.7	0.9	0.5	62	64	68	NNE 4	SSE 1	SE 2	1	2	1		
4	13.6	15.2	15.8	-26.4	-23.6	-20.0	-22.2	0.5	0.6	0.5	74	66	68	0	SSE 2	SE 1	7	3	4		
5	14.2	09.2	06.7	-26.2	-21.0	-19.1	-17.2	0.7	0.8	1.0	76	76	78	0	E 1	NNE 2	10*	10	10*	0.0	✱ n, a, p.
6	98.0	91.8	**87.9**	-21.0	-6.4	-5.8	-6.4	2.6	2.7	2.4	90	90	85	SW 4	N 2	SSW 3	10*	10*	10*	10.6	✱ n, a, p.
7	92.8	02.9	05.3	-16.9	-16.9	-19.2	-20.2	1.0	0.7	0.7	83	73	78	NE 5	NNW 5	SSE 2	10	1	10≡	3.2	✱ u. ≡ p.
8	02.6	00.4	98.5	-24.0	-10.5	-8.6	-8.9	1.5	1.5	1.7	70	66	73	WNW 3	W 3	WNW 2	8	9*	8	2.5	✱ n, a, p.
9	97.6	04.0	09.0	-15.0	-15.0	-18.2	-20.8	1.1	0.8	0.6	73	74	66	ENE 5	NNW 5	N 4	3	3	1	0.6	
10	23.3	28.2	**30.0**	**-27.0**	-25.2	-19.4	-22.9	**0.4**	0.6	0.5	67	63	66	NE 1	SE 1	SE 2	5	3	9		
11	28.4	26.1	19.5	-25.2	-19.8	-17.0	-16.9	0.7	0.8	0.9	70	66	70	SE 2	S 2	S 2	3	8	8		
12	15.4	13.1	09.8	-19.8	-11.6	-8.3	-8.2	1.6	1.8	2.1	83	76	84	SE 2	SE 1	0	10*	10	10	1.0	✱ n, a, abd.
13	01.4	99.6	98.3	-11.9	2.2	**2.6**	2.0	4.8	**4.9**	**4.9**	90	88	93	SSW 4	S 2	S 3	10●	9	10	2.9	✱ u. ● n, ● a, p.
14	98.1	00.8	02.7	-0.5	-0.2	-0.4	-3.4	3.3	3.1	2.6	74	71	73	SSW 3	W 2	NW 3	9	9	9	0.1	
15	04.3	03.7	03.1	-6.0	-4.0	-2.3	-8.0	2.5	2.4	2.1	72	63	82	SSE 2	S 1	NE 6	9	9	9*		✱ p.
16	05.0	06.8	07.5	-11.8	-10.6	-9.0	-12.0	1.4	1.4	1.2	68	59	63	NE 4	E 1	ENE 4	7	1	1	0.1	
17	10.7	11.8	12.3	-17.8	-14.8	-12.8	-15.4	1.0	1.2	0.9	68	67	65	E 3	ENE 1	SSW 3	9	9	1		
18	11.7	10.2	09.6	-20.6	-18.4	-14.2	-13.4	0.8	1.1	1.2	72	70	73	SSE 2	E 1	SE 1	9	9	8		✱ p.
19	10.8	12.7	13.6	-18.4	-10.2	-9.6	-9.6	1.7	1.8	1.8	80	78	80	SE 1	0	0	8*	10	9	0.3	✱ n.
20	16.2	17.0	17.2	-16.0	-14.8	-10.0	-10.5	1.0	1.3	1.3	67	60	63	ESE 2	SSE 4	0	2	1	1		
21	17.3	16.4	15.7	-18.3	-14.7	-7.1	-8.2	1.2	1.7	1.6	78	63	66	SE 1	SE 4	N 1	1	3	3		
22	13.8	12.8	11.9	-14.7	-9.0	-4.3	-6.9	1.6	2.1	2.0	68	61	71	N 2	NE 2	E 2	8	2	9		
23	12.2	14.0	14.3	-9.1	-5.8	-1.7	-3.0	2.4	3.2	2.9	80	78	80	0	NE 3	0	9	5	8		✱ a.
24	16.8	17.4	16.2	-5.8	-1.5	0.2	-3.2	2.6	2.8	2.5	63	61	70	ESE 3	SE 3	W 2	2	2	1	0.0	
25	17.9	17.7	18.0	-10.0	-6.2	-1.9	-3.0	2.4	2.9	2.4	84	71	64	SE 2	SSW 1	ENE 3	10	1	2		
26	20.8	22.6	23.8	-8.6	-6.4	-3.6	-7.0	1.7	1.9	1.8	59	55	64	E 1	NNW 1	0	0	8	1		
27	27.6	29.0	29.2	-17.5	-12.5	-8.0	-10.0	1.3	1.7	1.5	74	66	71	N 2	0	0	1	1	1		
28	29.0	29.2	27.3	-19.6	-13.9	-9.3	-9.4	1.1	1.4	1.6	72	63	68	E 2	0	ENE 1	1	1	8		
29	27.2	27.0	26.5	-13.9	-7.6	-4.4	-5.3	2.1	2.5	2.7	80	74	85	E 1	E 2	0	10*	10	9	0.1	✱ n, a, p.
30	26.3	27.1	28.4	-7.6	-1.6	0.9	-2.6	3.4	3.5	3.0	84	71	80	S 3	SE 3	NE 2	10*	10	9	1.6	✱ n.
M.	11.9	12.6	12.5	-16.0	-11.6	-9.3	-10.9	1.6	1.8	1.7	74	69	73	2.4	2.1	1.9	6.5	5.8	5.9	23.0	

$H = 7$ m, $H_b = 11.4$ m
$C_g = 2.45$ mb bei 1019 mb

$\varphi = 78^0\ 2'$ N
$\lambda = 14^0\ '14$ E

Mai.

Datum.	Luftdruck. 900 oder 1000 + 8	2	7	Luft-Temperatur. Min.	8	2	7	Absolute Feuchtigkeit. 8	2	7	Relative Feuchtigk. 8	2	7	Richtung und Stärke des Windes. 8		2		7		Bewölkung. 8	2	7	Niederschl.	Bemerkungen.
1	27.4	27.0	26.7	-5.0	-1.7	0.7	-2.4	3.1	3.3	3.1	77	70	79	N	1	NNW	2		0	10	10	9	0.0	
2	23.2	22.5	21.5	-10.6	-7.0	-2.3	-5.9	2.2	2.7	2.0	79	68	67		0	SE	2	NNE	2	6	2	1		
3	21.7	21.9	21.0	-16.0	-10.2	-4.0	-4.4	1.7	2.2	2.2	78	66	66	NNE	2	NE	2		0	1	8	9		
4	19.7	19.2	18.7	-10.2	-6.6	-3.0	-5.6	2.4	2.7	2.5	83	74	82	NE	1	NE	2	NNE	3	4	10	10		✱ a.
5	19.5	20.8	22.1	-9.9	-9.7	-9.8	-12.6	1.5	1.3	1.1	68	63	61	NE	3	NE	3	NE	4	10	10	9	0.2	
6	24.0	24.3	23.7	-18.5	-13.5	-9.4	-10.4	**1.0**	1.2	1.2	65	52	59	E	1		0	NW	1	8	4	5		
7	21.8	19.0	16.1	**-19.0**	-12.4	-6.2	-6.0	1.2	2.0	2.2	67	70	73		0	NW	3	NW	3	3	9	9		
8	12.3	13.1	13.1	-12.4	-10.1	-8.3	-9.3	1.4	1.8	1.7	64	71	72	N	2	NW	4	NW	4	3	4	10		
9	13.7	12.9	10.2	-12.5	-6.6	-3.4	-6.7	1.9	2.1	1.8	68	60	64	NNW	2	SSW	1	SSW	1	6	8	10		✱ p.
10	96.0	**91.4**	**91.4**	-9.5	-2.8	-1.0	-1.4	2.9	3.3	3.4	78	78	82	NE	1	NE	3	N	2	10*	10*	10	1.0	✱ n, a, p.
11	99.1	05.0	07.8	-4.3	-3.2	-4.4	-5.8	3.1	2.6	2.4	86	78	80	WNW	3	NW	3	NW	4	10	10	9	6.4	✱ p.
12	13.6	15.4	16.1	-8.2	-7.0	-6.8	-7.0	1.9	1.8	1.9	71	67	68	NNW	5	NW	4	NW	3	9	10	10	0.0	
13	16.3	16.3	16.2	-9.0	-7.9	-2.6	-5.7	1.7	2.1	2.1	67	57	72	ESE	1	SE	1	SW	2	4	10	9		
14	16.7	17.9	17.8	-10.2	-7.7	-5.2	-7.2	1.9	1.9	2.0	73	63	73		0	SE	2	SE	2	1	1	1		
15	18.5	18.7	17.6	-14.1	-7.2	-4.0	-3.8	2.1	2.3	2.3	79	67	66	SE	3		0	NW	2	10	9	7		
16	13.3	12.7	13.7	-7.2	-2.4	-1.5	-5.2	3.3	3.0	2.3	85	72	73	SW	1	N	3	NW	2	10*	5	1	0.0	✱ n, a.
17	17.6	18.6	16.4	-8.9	-1.8	-2.1	-3.1	2.8	2.5	2.4	70	64	66	NW	1	W	1		0	10	9	10	0.0	✱ n.
18	04.0	99.4	01.6	-5.3	-3.2	-1.6	-3.2	3.0	3.0	2.8	83	72	76	NE	4	NE	3	N	2	10	10*	10		✱ a, p, abd.
19	13.6	17.0	18.0	-10.1	-7.0	-1.8	-5.0	2.1	2.7	2.4	78	68	76	N	1	NNE	1	N	2	4	1	0	1.7	
20	19.0	19.1	18.4	-12.1	-3.2	0.0	-3.3	2.9	3.5	3.0	79	76	84	NNE	2	NNE	1		0	10*	10•*	10*	0.0	
21	18.9	21.8	23.1	-9.0	-5.0	-2.7	-3.7	2.5	2.9	2.5	78	77	72		0		0		0	10	10*	3	0.6	✱ a.
22	**24.7**	24.4	23.0	-11.6	-5.9	-4.6	-6.7	2.2	2.2	2.0	73	68	71		0	N	2	NNE	2	4	3	9	0.1	
23	20.0	18.6	17.2	-10.8	-6.4	-2.2	-4.0	2.1	2.4	2.6	73	62	77	SE	2	ESE	1		0	1	7	10*		
24	16.0	16.0	16.0	-11.7	-7.5	-2.2	-6.0	2.1	2.5	2.2	79	65	77	ESE	1	ESE	1		0	9	3	7	0.0	
25	16.8	17.8	18.2	-13.3	-7.7	-2.8	-5.4	1.8	2.2	2.0	71	59	64	SE	2	SSE	2		0	7	6	6		
26	18.6	18.9	19.3	-15.5	-8.8	-1.6	-7.0	1.7	2.3	1.9	71	57	71	SSE	1	SSE	1	SE	2	0	6	2		
27	19.7	19.8	19.6	-12.6	-4.9	-1.2	-4.8	2.2	2.4	2.3	70	59	70		0		0	SE	2	1	1	1		
28	18.5	18.0	17.6	-13.3	-6.8	-0.6	-1.3	2.0	2.6	3.5	72	59	84	SE	1	SE	1	NW	2	3	10	10		
29	19.6	20.9	21.6	-6.8	-0.8	2.0	-0.2	3.7	4.2	3.8	85	78	83	NNW	2	NNW	1	NW	1	9	6	3	3.3	✱ n.
30	21.0	19.9	18.1	-3.0	0.2	2.4	1.2	3.6	3.6	3.3	77	67	66		0	SSE	3	SE	4	3	7	7		
31	12.0	11.7	10.4	-2.4	1.3	**3.1**	3.0	3.9	4.0	**4.5**	78	70	80	SE	4	SE	4	SE	3	9	9	9		
M.	16.7	16.8	16.5	-10.4	-5.9	-2.8	-4.8	2.3	2.6	2.4	75	67	73		1.5		1.8		1.8	6.3	7.0	7.0	13.3	

Juni.

Datum.	Luftdruck. 900 oder 1000 + 8	2	7	Luft-Temperatur. Min.	8	2	7	Absolute Feuchtigkeit. 8	2	7	Relative Feuchtigk. 8	2	7	Richtung und Stärke des Windes. 8		2		7		Bewölkung. 8	2	7	Niederschl.	Bemerkungen.
1	09.7	09.4	09.3	0.0	1.9	3.7	1.4	4.5	4.9	4.7	85	82	93	NNW	2	NNW	3		0	9	10	10•		● p.
2	08.8	09.8	09.9	**-0.8**	2.0	3.4	4.2	4.6	4.7	4.9	88	80	79		0		0	E	1	9	1	2	1.0	
3	12.2	14.7	16.0	1.2	2.5	3.2	3.3	4.7	4.6	4.8	86	80	84		0	E	2	ENE	1	5	10	9		
4	21.3	23.7	24.5	1.4	3.1	3.6	2.4	4.7	4.8	4.7	83	82	86	ENE	1	ENE	1		0	9	9	10		
5	**25.4**	25.3	25.2	0.4	2.6	4.4	2.1	4.9	5.1	4.7	89	82	88		0		0	N	3	10	7	9		
6	21.5	20.3	17.8	-0.2	1.1	1.2	1.0	4.4	4.5	4.3	89	89	88	N	1		0	NNE	1	9	10≡	7≡		
7	14.9	14.6	14.3	0.2	1.7	3.2	2.7	4.5	4.8	4.8	88	84	86	SE	2		0	SSE	1	10	9	10•		● p.
8	15.0	16.0	15.8	0.7	2.6	3.2	2.0	5.0	5.1	4.8	92	88	92		0	SSW	2		0	10•	10•	10≡	2.1	● n, a, ≡ a.
9	15.5	16.2	15.8	0.6	2.0	3.0	2.8	4.9	5.0	4.9	93	88	88		0	SSE	2	SE	2	10•≡	10•*	9	1.9	● n, a, ● ✱ p.
10	17.0	16.6	13.9	1.1	2.6	3.6	2.5	4.7	4.8	4.8	85	82	88	SE	2	SE	2		0	9	10	10	0.0	
11	04.1	99.9	**98.0**	1.4	2.8	3.7	2.3	5.1	5.6	5.1	92	93	93	SSE	2	NNE	1		0	10•	10•	10•	2.5	● n, a, p.
12	99.6	00.0	00.3	0.7	2.1	4.2	3.5	5.0	5.1	5.0	93	82	85	NW	3	NW	1		0	9	9	8	3.0	● n.
13	01.3	03.1	03.4	1.7	2.4	3.4	3.3	4.8	5.0	4.9	88	85	85	N	2	NNW	3	NNW	3	10	8	7		
14	04.4	04.7	05.4	1.5	4.0	4.9	3.0	5.0	5.0	4.7	83	77	83		0	NNE	2	NW	1	10	10	10		
15	04.8	04.1	02.3	1.2	4.0	4.0	2.9	4.0	4.1	3.9	66	67	70	SE	3	SE	3	SE	4	5	10	7		
16	03.9	05.4	06.3	1.6	4.2	4.2	2.7	3.9	3.9	**3.7**	64	64	65	SE	4	SE	5	SE	6	1	1	2		
17	12.2	15.1	16.2	1.3	3.8	2.2	2.8	4.2	4.3	4.4	70	80	78	SSE	2	NW	3	NNW	3	3	7	2		
18	15.9	15.0	13.4	2.1	7.0	5.1	5.2	4.7	5.0	5.0	63	77	76	NW	1	NW	2	NW	2	4	6	4		
19	13.8	14.3	16.8	2.0	3.7	3.7	3.8	4.7	4.7	4.7	79	79	78	NNW	2	NNW	3	N	3	9	8	7		
20	18.4	18.4	17.9	1.6	4.2	4.2	3.8	4.7	4.7	4.7	76	76	78	SW	2	SW	2	SSW	3	2	2	9		
21	17.3	16.8	16.8	1.8	3.6	5.4	4.4	5.0	4.8	4.9	85	73	79	SE	2	SSW	2	SSE	2	0≡	9	8		
22	15.9	16.0	12.4	2.8	3.8	4.4	4.6	5.1	5.0	4.9	86	80	78	SSE	3	S	3	S	3	9	9	9		
23	12.0	11.9	12.8	3.0	5.8	6.9	5.4	4.9	5.4	5.0	72	73	76	S	3	N	2	S	3	5	2	8		
24	16.0	18.2	20.1	3.3	5.4	**9.2**	6.1	5.1	**6.0**	5.5	77	70	78	W	1	W	1	W	1	9	9	9		
25	20.4	19.6	19.0	3.7	3.7	6.2	4.8	5.0	5.2	5.3	84	74	82	WSW	2	NNW	3	NNW	2	8	9	9		
26	16.1	15.3	15.2	3.7	5.1	8.4	8.0	5.3	5.6	5.9	82	67	73	NW	2	NW	1	NW	1	8	7	7		
27	13.9	15.0	13.7	5.1	7.5	7.8	7.4	5.9	**6.0**	5.4	76	77	71	N	2	SSW	3	W	3	5	10	1		
28	14.4	15.0	13.1	2.1	3.6	4.8	4.6	4.7	4.9	4.8	80	77	77	SW	2	SSW	3	S	3	10	10	10		● sch. p.
29	13.5	15.4	15.6	2.6	3.0	3.8	4.0	5.0	4.6	4.8	89	77	78		0	SW	3	SW	1	10	10	9	0.5	● n.
30	16.8	18.6	19.2	2.6	3.9	4.8	4.6	4.8	4.6	4.9	78	71	78	W	3	W	3	W	2	9	8	9		
M.	13.2	13.6	13.3	1.7	3.5	4.5	3.7	4.8	4.9	4.9	82	79	81		1.6		2.0		1.8	7.5	8.0	7.7	11.0	

TERMIN-BEOBACHTUNGEN.

Jan Mayen. 1924.

H = 21 m, H_b = 23.1 m
C_g = 2.35 mb bei 1012 mb

φ = 70° 59′ N
λ = 8° 18′ W

Juli.

Datum.	Luftdruck. 900 oder 1000 + 2	8	2	7	Luft-Temperatur. Min.	2	8	2	7	Relative Feuchtigk. 2	8	2	7	Richtung und Stärke des Windes. 2	8	2	7	Bewölkung. 2	8	2	7	Niederschl.	Bemerkungen.
1	00.8	00.7	01.2	01.4	2.7	2.7	3.1	5.0	4.3	88	89	85	88	W 3	NW 1	SSW 2	SSW 2	10	10	9	10	0.0	
2	01.4	00.3	00.8	00.8	3.0	3.7	4.2	4.5	3.5	90	86	89	93	0	SW 1	E 3	E 4	10	10	10	10		●⁰ p.
3	00.7	99.1	99.6	99.2	3.1	3.1	4.3	6.9	7.6	93	88	87	87	E 2	ENE 4	ENE 4	ENE 4	10●	10	9	9	0.0	●⁰ n, p.
4	98.8	96.3	94.7	93.4	4.3	5.1	6.6	8.3	7.1	93	93	89	95	ENE 5	ENE 6	ENE 6	ENE 5	10●	10●	10●	10●	0.0	●⁰ n, a, p.
5	94.8	93.6	93.9	93.0	4.6	7.6	6.7	6.1	4.9	96	96	97	95	ENE 4	ENE 3	ENE 4	E 2	10●	10≡	10≡	10≡	2.1	● n, ≡ ● a, p.
6	91.8	89.4	89.4	89.8	4.1	4.5	5.7	7.5	6.9	93	92	89	91	0	NE 5	SE 1	0	10≡	10●	10	10	1.0	≡ ● sch. n, ≡⁰ a, p.
7	89.6	91.2	93.9	96.2	4.8	5.4	6.2	5.8	4.8	92	93	95	94	0		0	0	10≡	10≡	10●̣	10●̣	0.0	≡ n, ≡ ●⁰ a, p.
8	01.1	03.4	06.3	07.8	2.8	5.1	6.6	7.8	6.2	85	78	95	95	0	0	ENE 3	ENE 1	10●̣	10≡	10≡	10●	0.0	≡ ●⁰ n, ≡ a, ≡ ●⁰ p.
9	09.0	07.6	06.7	05.9	-0.2	-0.2	5.9	7.7	7.5	88	88	92	78	0	WNW 2	NW 5	NNW 5	10●	8	8	10	0.0	≡ ●⁰ n.
10	06.2	06.0	07.8	08.7	3.4	3.8	6.9	4.9	4.8	92	79	90	90	NW 5	NW 5	WNW 5	NW 5	10●	10●	9	8	0.0	●⁰ n, a.
11	10.0	11.0	12.4	11.9	3.2	4.0	6.0	6.1	7.8	72	83	85	82	NW 1	NW 2	0	NE 4	9	10	10	10	0.0	●⁰ p.
12	12.6	12.7	14.8	14.3	6.0	8.5	7.7	7.8	7.3	76	81	90	95	NE 4	E 5	ENE 5	ENE 4	10	10	10●̣	10●̣	0.0	≡ ●⁰ a, p.
13	14.8	14.4	13.8	12.8	7.0	8.0	7.0	9.9	8.8	95	95	95	83	NE 4	ENE 2	ENE 3	ENE 4	10●̣	10●̣	10●̣	10	0.0	≡ ●⁰ n, a, ≡⁰ p.
14	10.0	09.4	08.3	07.1	5.3	6.1	7.4	9.4	8.3	95	92	85	90	S 2	ENE 4	E 5	ENE 6	10	10	10	10●	0.0	≡ ●⁰ a, ● p.
15	05.1	04.2	02.7	00.0	6.5	8.2	7.6	8.0	8.9	90	95	96	95	ENE 5	E 2	E 2	NE 5	10●	10●	10≡	10●	1.5	● n, ≡ ● a, p.
16	96.4	94.8	96.0	97.2	6.8	7.4	9.6	9.4	7.0	95	94	90	94	0	NW 2	W 3	0	10	9	9	10	5.1	●⁰ n.
17	99.9	98.7	98.0	97.0	6.3	6.4	6.7	9.6	7.4	94	93	88	94	0	0	W 1	W 1	10≡	10	10●	10●		≡ n, ●⁰ a, ≡ ● p.
18	94.4	94.0	94.2	95.2	4.8	7.3	8.0	7.0	7.7	94	94	93	92	0	0	NE 2	0	8	10≡	10	10≡	2.0	● n, ≡ a, p.
19	96.6	01.4	07.6	10.4	3.9	5.7	4.6	7.9	6.8	84	93	84	80	NNW 6	NW 7	NW 5	NNW 3	9	9	3	3		
20	13.1	15.6	17.2	16.7	1.4	3.7	3.4	5.9	6.6	92	88	83	80	0	0	0	0	10●	10	10	9	0.1	● n, a, p.
21	15.2	14.0	13.8	13.2	3.4	6.2	7.4	9.2	8.1	86	85	82	87	0	E 2	E 2	E 4	8	10	4	10	0.1	
22	10.4	08.9	07.4	05.9	6.2	6.7	7.0	6.4	6.8	95	95	95	94	ENE 4	ENE 3	NE 1	ENE 2	10●	10	10	10	0.0	●⁰ n, ≡ ●⁰ a, ≡ p.
23	05.5	05.9	07.1	07.9	5.1	5.3	6.2	7.4	6.3	97	95	92	94	NE 1	ENE 1	E 1	E 3	10●	10●	10●	10	0.0	●⁰ n, ≡ ● a, p.
24	08.8	09.6	11.1	12.1	4.2	5.6	5.2	6.2	8.4	90	94	92	78	NW 2	NNW 2	E 2	SW 2	9	10●̣	10≡	1	1.6	≡ ● a, ≡ p.
25	13.9	14.0	14.2	13.0	2.4	4.4	7.8	10.4	11.1	93	60	47	36	SSE 1	SSE 1	SE 5	E 0	0	4	9	10		
26	12.4	12.2	12.5	12.2	6.7	7.0	8.1	7.8	8.2	95	89	93	89	E 5	E 4	ENE 4	E 4	10≡	10≡	10≡	2		≡ n, a.
27	11.7	11.3	12.0	11.7	6.2	6.6	8.0	9.5	9.4	95	93	89	93	E 4	E 4	E 4	E 2	10≡	10≡	10	10		≡ n, a, ≡ ● p.
28	12.9	13.5	14.7	14.6	7.3	8.6	8.9	8.6	9.4	93	89	88	86	E 2	ESE 1	SSE 1	S 1	10≡	10≡	10≡	10≡	0.0	≡ n, a, p.
29	13.9	13.0	11.7	10.4	7.0	8.2	7.2	9.3	9.1	88	92	90	89	ENE 3	E 1	E 3	SE 4	10≡	10≡	10●	10≡		≡ n, a, ≡ ●⁰ p.
30	09.8	09.6	09.1	07.2	6.8	7.5	7.2	7.5	7.4	94	95	94	95	0	SE 2	E 4	E 5	10≡	10●	10≡	8≡	0.0	≡ n, ≡ ●⁰ a, ≡ p.
31	05.2	03.9	03.7	03.2	6.7	6.8	8.2	10.1	9.6	94	90	88	93	ENE 6	E 4	E 4	E 3	10≡	8≡	8≡	10	0.0	≡ ●⁰ n, a, p.
M.	05.4	05.2	05.7	05.5	4.7	5.8	6.6	7.7	7.4	91	89	89	88	2.2	2.5	2.9	2.9	9.5	9.6	9.3	9.0	13.5	

August.

Datum.	2	8	2	7	Min.	2	8	2	7	2	8	2	7	2	8	2	7	2	8	2	7	Niederschl.	Bemerkungen.
1	03.4	03.1	02.3	00.6	6.4	8.2	6.8	8.3	8.5	95	95	84	85	ESE 1	SE 3	SE 2	E 3	10≡	10≡	10≡	10≡	0.0	≡ n, a, p.
2	98.9	98.5	98.9	98.2	6.8	8.8	8.4	9.2	9.6	94	96	94	93	NE 3	E 2	E 2	E 1	10●̣	10●̣	10●̣	10	2.6	≡ ● n, a, ≡ p.
3	99.0	99.9	01.4	02.9	6.8	8.0	6.8	7.4	8.2	88	92	85	88	W 2	NW 3	WSW 2	SW 2	10	10≡	10≡	10	0.0	≡ a.
4	05.0	05.1	05.9	04.3	5.5	6.0	7.3	9.4	9.7	86	80	90	85	WNW 1	N 2	ENE 3	ENE 6	8	10	10≡	6		≡ p.
5	99.1	91.7	89.5	92.3	7.3	11.6	14.9	9.6	9.4	84	71	95	95	E 6	NE 8	ENE 6	NE 3	10	10	10●	10		● a, p.
6	94.4	94.9	94.4	95.4	8.8	9.1	9.6	10.4	11.2	86	86	85	78	NE 2	0	SSW 2	NNW 4	10≡	10	9	10≡	11.0	≡ n, p.
7	96.0	97.5	00.4	02.2	3.2	7.8	7.4	7.8	5.4	88	89	85	89	NW 3	NW 4	NW 2	NW 4	10	10	10≡	9		≡ p.
8	03.4	03.0	01.9	01.3	2.7	3.0	5.4	8.3	7.8	96	95	82	90	WNW 4	W 2	NE 1	ESE 1	10	10	9	10		● sch. a.
9	02.0	01.5	99.4	97.2	5.4	6.3	7.8	9.0	7.6	83	95	95	95	SW 1	W 1	ENE 3	W 1	10	10	10●	10●	0.0	● p.
10	98.9	01.0	03.5	05.0	3.8	6.2	6.4	5.4	4.5	86	69	76	93	W 1	NW 6	NW 5	NW 4	10●	8	10	10≡	11.0	● n, ≡ p.
11	05.3	04.9	05.7	06.9	3.3	3.6	4.0	5.8	6.1	93	89	72	78	NW 4	NW 2	NE 2	SSW 2	10≡	10●	9≡	9	0.0	≡ ● ⁰ n, a, ≡ p.
12	09.9	10.7	12.0	11.9	1.5	3.4	5.5	7.2	6.4	78	70	61	74	SW 2	W 2	NW 2	S 2	4	6	5	4	0.0	
13	10.9	08.4	05.6	04.0	2.0	3.3	5.4	7.1	8.2	86	76	78	81	W 2	W 2	W 3	NE 3	6	10	10	10		
14	03.4	03.7	05.1	05.6	5.2	7.2	7.9	8.4	7.3	87	84	74	74	NE 2	NE 4	E 5	NE 5	6	9	2	8		
15	05.5	05.7	06.9	06.7	6.2	6.2	6.8	7.7	8.1	84	79	82	77	E 6	NE 6	NE 7	NE 8	10	10	10	9		
16	08.0	07.4	07.2	07.1	6.8	8.6	9.3	10.0	8.8	75	73	84	86	NE 8	E 8	NE 8	ENE 8	8	10	10●	10		● p.
17	02.3	97.4	02.5	01.6	6.0	8.2	8.8	9.9	8.3	74	77	86	94	NE 10	NNE 10	NE 7	ENE 7	10●	10●	10●	10	3.0	● n, ●⁰ a, p.
18	04.6	04.8	05.8	05.6	7.2	7.6	8.1	11.4	11.4	89	87	62	64	NW 1	NW 7	ENE 7	NNE 8	10●	10	9	8	5.0	● sch. n, a.
19	11.7	11.4	12.8	13.7	7.1	8.4	7.2	9.6	7.4	78	91	84	82	NW 3	WSW 3	NW 3	SW 2	10	6	4	10	0.0	
20	13.1	12.6	13.0	11.3	4.4	4.8	5.8	7.4	6.8	79	69	63	82	WNW 5	SE 5	SE 4	S 4	1	4	7	4		
21	10.0	09.9	11.4	12.1	4.5	4.8	6.2	7.6	7.2	77	84	71	73	NW 3	NNW 2	WNW 3	NW 2	6	6	8	5		
22	13.9	14.3	14.6	14.8	3.0	3.6	4.8	5.6	5.2	86	81	80	79	W 2	0	WNW 1	0	8	10	10≡	10≡		≡ p.
23	15.4	16.1	17.0	17.1	4.2	4.2	4.2	5.8	5.4	92	91	79	80	W 1	W 1	W 1	0	10≡	10≡	10≡	10≡		≡ n, a, p.
24	17.6	17.7	18.0	17.3	2.6	2.9	5.2	6.6	6.5	81	87	88	81	WSW 1	0	E 2	NE 2	4	10	10	10		
25	15.8	15.5	15.7	15.8	5.2	5.8	6.4	7.3	8.1	95	91	95	95	NE 2	NE 2	NE 2	0	10●	10●	10	10≡	0.0	● ⁰ n, a, ≡ p.
26	15.0	15.8	15.5	15.0	5.0	6.1	5.9	7.8	7.1	96	94	88	90	0	NE 1	W 4	NW 3	10≡	10	10	10≡	0.0	≡ n, p.
27	14.1	13.1	12.9	12.5	5.9	6.6	6.9	8.1	7.0	94	90	88	95	WNW 1	NW 1	0	ESE 1	10●̣	10●	10	10	1.5	≡ ● n, a.
28	11.0	10.1	08.7	06.6	6.9	7.2	7.1	7.6	8.4	96	95	95	81	NE 3	NE 1	ENE 3	NW 1	10●̣	10●	10	10	5.0	≡ ●² n, a, p.
29	05.3	04.2	02.6	00.3	6.4	6.6	7.4	8.9	8.4	93	94	91	83	W 0	NE 1	NE 3	ENE 1	10●	10	9	6	5.6	●⁰ n, a.
30	97.1	96.1	98.4	99.8	6.2	6.3	7.3	7.1	7.4	91	85	90	84	WNW 2	N 1	NW 3	NW 4	8	9	10●	8	0.0	≡ ●⁰ p.
31	02.6	04.5	06.7	06.9	5.2	6.2	5.6	8.0	7.5	77	84	76	82	NW 4	NNW 1	0	E 3	10	10	10	10●	0.0	●⁰ p.
M.	06.2	05.8	06.3	06.2	5.2	6.3	7.0	8.1	7.7	87	85	83	84	2.8	2.9	3.2	3.1	8.7	9.3	9.1	8.9	44.7	

1924.

Jan Mayen.

$\lambda = 8^0\ 18'\ W = 33^m\ 12^s$ $\varphi = 70^0\ 59'\ N$ $C_g = 2.35$ mb bei 1012 mb

Monat.	Luftdruck. (Normalschwere.) Mittel.	Luft-Temperatur. Min.	I	II	III	Mittel.	beobachtetes Max.	Dat.	Min.	Dat.	Absolute Feuchtigkeit. I	II	III	Mittel.	Relat. Feuchtigk. I	II	III	Mittel.	Monat.
Januar	996.4	-3.4	-1.0	-0.7	-0.9	-0.8	2.6	13	-7.9	16	3.6	3.7	3.6	3.6	85	84	84	84	Januar
Februar	1002.3	-8.8	-4.6	-4.8	-5.1	-4.9	1.8	11	-17.2	27	2.6	2.7	2.5	2.6	80	83	80	82	Februar
März	11.7	-7.8	-5.3	-4.4	-5.2	-5.1	2.5	13	-13.1	1	2.3	2.5	2.3	2.4	75	75	76	76	März
April	13.0	-7.0	-3.9	-3.1	-3.5	-3.8	2.0	19	-11.7	6	2.8	2.8	2.5	2.6	81	77	72	77	April
Mai	13.7	-2.5	-0.5	0.6	0.2	-0.2	4.6	19	-6.1	2	3.7	3.9	3.9	3.8	83	81	83	82	Mai
Juni	14.2	0.9	2.5	3.6	3.0	2.7	8.2	17	-1.5	7	4.7	5.1	5.0	4.9	87	87	89	88	Juni
Juli	05.4	4.7	6.6	7.7	7.4	6.8	11.1	25	-0.2	9	6.5	7.0	6.8	6.7	89	89	88	89	Juli
August	06.1	5.2	7.0	8.1	7.7	7.2	14.9	5	1.5	12	6.5	6.8	6.6	6.6	85	83	84	85	August
September	998.9	1.9	3.6	4.5	3.8	3.8	9.0	3	-1.0	24	4.8	5.0	4.8	4.8	80	78	78	79	September
Oktober	1001.4	-0.9	1.4	1.6	0.9	1.3	8.8	8	-10.6	18	4.3	4.4	4.2	4.4	84	83	84	84	Oktober
November	03.9	-5.1	-2.5	-2.5	-2.5	-2.6	4.6	11	-11.7	26	3.3	3.3	3.3	3.3	82	82	81	82	November
December	990.4	-4.9	-2.6	-2.5	-2.6	-2.6	3.1	6	-11.9	16	3.3	3.3	3.2	3.3	83	80	80	81	December
Jahr		-2.3	0.0	0.7	0.3	0.2	14.9		-17.2		4.0	4.2	4.1	4.1	83	82	82	82	Jahr

Jan Mayen. **1924.**

$H = 21$ m, $H_b = 23.1$ m $\varphi = 70^0\ 59'\ N$

$C_g = 2.35$ mb bei 1012 mb **September.** $\lambda = 8^0\ 18'\ W$

Datum.	Luftdruck. 900 oder 1000 + 2	8	2	7	Luft-Temperatur. Min.	2	8	2	7	Relative Feuchtigk. 2	8	2	7	Richtung und Stärke des Windes. 2	8	2	7	Bewölkung. 2	8	2	7	Niederschl.	Bemerkungen.
1	07.2	07.0	07.1	07.1	5.6	7.4	7.0	7.8	8.8	88	82	88	84	NE 3	WSW 2	0	WNW 2	10●	10●	10●	10	0.0	●⁰ n, a, p.
2	10.2	13.4	16.2	16.1	6.1	7.2	6.6	7.5	6.3	92	87	82	86	0	0	SSE 1	NE 7	10	10	10	10	6.0	●⁰ n, ● sch. a.
3	12.1	07.2	06.9	06.1	6.3	8.7	**9.0**	8.0	7.6	89	93	95	93	NE 7	E 2	0	0	10●	10●	10≡●	9≡	12.0	≡● n, ≡●⁰ a, p.
4	07.5	08.6	08.8	08.9	3.1	7.4	8.0	6.8	4.2	90	88	90	92	0	SW 3	SW 3	WNW 5	3	10≡	8	10	0.5	≡ a.
5	11.1	13.4	15.5	16.4	2.3	2.6	2.6	3.6	4.6	92	92	83	81	WNW 5	NW 4	NW 3	NE 2	10≡	10≡	6	9		≡ n, a.
6	17.3	15.7	15.4	13.4	2.6	3.2	3.6	4.4	3.3	86	79	84	87	0	NW 2	NE 1	W 1	10	10	10	10		
7	12.1	11.2	10.0	09.0	0.6	1.6	1.4	1.3	1.5	73	63	75	80	NNW 3	N 5	NW 5	NW 6	5	10✱	10	10✱	0.0	✱ sch. a, p.
8	08.8	07.0	06.7	06.0	0.8	1.2	0.8	1.6	0.8	69	85	83	84	NW 6	NW 5	NW 7	NW 6	10✱	10✱	10	10✱	1.0	✱ u. ✱● n, a, p.
9	04.8	03.4	01.8	01.8	0.8	1.3	1.3	2.8	3.1	85	83	90	63	NW 7	NW 7	NW 6	N 5	10✱●	10✱●	10△	10	2.4	✱● n, ✱● u. △ a.
10	00.7	99.9	00.8	00.9	1.3	2.3	2.3	2.1	1.9	58	53	69	60	N 4	NNW 4	NW 4	NNW 4	10	8	10	10	0.7	
11	01.3	01.2	01.7	01.1	1.1	1.8	1.1	1.9	2.6	58	60	70	53	NNW 3	NW 3	NW 3	NNW 4	10	9	6	10		
12	00.2	98.3	98.7	98.9	0.0	0.8	0.8	2.5	2.6	72	60	61	56	NNW 4	NNW 3	NNW 3	SE 1	10	7	3	10	0.5	✱ sch. n.
13	98.9	97.3	95.7	92.2	0.8	1.9	2.3	4.8	3.3	75	69	63	69	SSE 2	E 3	E 4	E 2	10	10	9	10	0.0	✱ sch. n.
14	90.3	89.1	91.0	92.2	0.2	2.8	0.9	2.7	0.4	74	74	63	90	E 3	SW 3	NNW 5	NNW 5	10	1	8	9✱		✱ sch. p.
15	93.4	93.8	94.8	94.7	-0.1	-0.1	0.8	2.6	1.8	81	91	82	80	N 4	N 2	N 3	NW 4	6✱	3	5	10	0.4	✱ sch. n, p.
16	95.1	93.4	93.3	90.2	-0.4	-0.2	1.0	3.8	0.3	92	94	60	77	NW 3	NW 3	NW 2	W 2	8	10	10	7	0.0	✱● p.
17	89.2	87.5	84.9	83.7	0.3	4.2	4.0	4.6	5.4	80	84	64	63	E 6	ENE 5	NE 6	NE 9	10●	10	10●	9	10.0	● a, p.
18	83.2	85.0	88.4	90.4	4.0	4.6	4.6	7.2	5.8	84	67	68	83	W 4	W 1	S 2	N 1	5≡	4	4	4	3.2	
19	92.6	93.9	94.6	94.0	3.0	3.8	3.5	6.7	6.6	74	82	74	82	N 2	N 3	N 1	SSW 3	4	10	10●	10●		●⁰ p.
20	94.8	94.5	95.1	93.7	3.5	5.8	6.8	7.9	7.4	82	73	70	73	E 5	E 5	NE 6	E 4	10●	10	9	10	0.0	●⁰ n.
21	92.8	92.7	94.6	95.4	4.4	6.9	6.2	6.9	5.2	79	83	86	92	NNE 1	E 5	E 4	E 3	4●	7	10	8	0.4	●⁰ n, p.
22	95.7	94.5	98.7	98.8	3.5	5.4	5.0	5.3	5.4	83	84	85	82	NW 2	N 2	N 3	SSE 3	10	10	10	10	0.2	
23	99.3	98.4	00.0	01.4	1.3	4.2	3.7	4.4	2.9	83	79	76	76	SW 4	NNW 4	N 5	N 5	6	6≡	10	10		≡ a.
24	04.6	05.8	07.4	06.4	**-1.0**	1.1	-0.2	0.2	-0.2	83	81	68	66	N 5	N 4	N 4	NNW 2	10✱	10	10	6	0.0	✱⁰ n.
25	02.8	98.6	96.7	96.5	-0.2	2.1	3.0	4.1	1.8	90	94	92	85	NNW 3	S 5	SW 5	W 4	10✱	10✱	10●	10	4.0	✱ n, ●✱ a, p.
26	98.6	00.3	01.8	00.6	0.0	1.4	1.1	2.6	1.4	91	83	80	76	WNW 5	N 4	N 2	SE 2	6≡	10✱	10	10	3.0	≡ n, ✱⁰ a, ✱⁰ sch. p.
27	93.3	85.4	83.3	82.5	0.8	3.4	5.9	5.0	4.0	66	92	89	86	SE 7	NE 6	ENE 3	NE 3	10	10●	10	10	2.0	● a, p.
28	82.7	88.2	92.3	91.6	0.8	1.4	2.0	1.5	2.4	91	88	88	81	NW 8	NW 7	NW 6	ENE 1	10✱●	10●	10●	10	1.7	● u. ✱● n, a, p.
29	84.1	83.4	84.5	86.8	0.6	4.4	7.0	6.6	6.0	70	70	80	82	ENE 5	NE 7	NE 9	ENE 7	10	10	10●	10●	0.0	● a, p.
30	90.5	90.7	86.3	81.2	5.0	5.4	5.8	6.6	7.2	75	77	87	87	E 3	ENE 6	NE 7	ENE 4	10	10	10●	10●	2.4	● n, a, p.
M.	99.2	98.6	99.1	98.6	1.9	3.5	3.6	4.5	3.8	80	80	78	78	3.8	3.8	3.8	3.6	8.6	8.8	8.9	9.4	50.4	

JAHRES-RESUMÉ.

1924.

Jan Mayen.

H = 21 m, H_b = 23.1 m — h_t = 2.0 m — h_r = 1.5 m

Monat.	Bewölkung. I	II	III	Mittel.	Niederschlag. Summe.	Zahl der Tage mit Niederschlag.	≥0.1 mm.	≥1.0 mm.	Schnee. ≥0.1 mm.	Hagel.	Nebel.	Heiter.	Trübe.	Gewitter.	Sturm.	Windverteilung. N	NE	E	SE	S	SW	W	NW	C	Windstärke Mittel.	Monat.
Januar . . .	8.7	8.4	7.7	8.3	48.9	25	19	11	14	0	0	0	20	0	7	6	19	27	9	4	7	6	12	3	5.2	Januar
Februar . .	8.3	9.1	8.7	8.7	34.2	25	18	13	16	2	0	0	19	0	6	15	5	17	5	2	8	6	26	3	4.6	Februar
März	8.1	8.2	8.0	8.1	22.3	25	11	5	11	0	1	1	19	0	4	22	20	13	6	5	4	2	17	4	4.1	März
April	8.7	8.5	7.9	8.4	45.1	24	16	11	14	0	4	0	21	0	8	29	18	8	1	3	4	3	23	1	5.6	April
Mai	8.9	8.9	8.5	8.8	10.7	23	9	2	8	0	4	1	23	0	0	19	14	17	6	3	6	0	11	17	3.2	Mai
Juni	9.1	8.9	9.3	9.1	7.6	21	6	1	1	0	1	0	24	0	0	2	18	24	5	10	12	5	5	9	2.6	Juni
Juli	9.6	9.3	9.0	9.3	13.5	24	8	6	0	0	20	0	26	0	0	2	15	37	6	3	3	4	10	13	2.8	Juli
August . .	9.3	9.1	8.9	9.1	44.7	18	8	8	0	0	15	0	26	0	1	4	25	13	5	3	4	11	20	8	3.1	August
September	8.8	8.9	9.4	9.0	50.4	24	17	11	10	1	6	0	26	0	2	20	14	12	3	3	5	6	23	4	3.7	September
Oktober . .	8.6	9.3	8.8	8.9	50.6	29	23	14	7	0	10	0	23	0	2	14	10	24	7	7	6	9	15	1	4.5	Oktober
November .	8.1	9.1	8.3	8.5	35.1	26	19	9	11	0	7	1	20	0	3	22	6	14	8	6	2	15	15	2	4.2	November
December .	7.8	8.6	7.5	8.0	45.7	25	16	12	10	3	3	0	14	0	6	13	30	24	5	3	2	8	7	1	4.8	December
Jahr	8.7	8.9	8.5	8.7	408.8	289	170	103	102	6	71	3	261	0	39	168	194	230	66	52	63	75	184	66	4.0	Jahr

BEOBACHTUNGEN.

Jan Mayen. — **1924.**

H = 21 m, H_b = 23.1 m — φ = 70° 59′ N

C_g = 2.35 mb bei 1012 mb — **Oktober.** — λ = 8° 18′ W

Datum.	Luftdruck. 900 oder 1000 + 2	8	2	7	Luft-Temperatur. Min.	2	8	2	7	Relative Feuchtigk. 2	8	2	7	Richtung und Stärke des Windes. 2	8	2	7	Bewölkung. 2	8	2	7	Niederschl.	Bemerkungen.
1	75.6	81.1	82.0	77.7	2.9	3.9	4.2	5.6	5.4	82	77	79	89	S 7	S 5	E 6	NE 9	10	8	10	10●	4.4	● sch. n, a, p.
2	75.9	80.6	86.1	86.8	2.2	6.3	5.6	5.9	4.7	95	86	84	84	E 5	SSE 6	SSE 7	SE 8	10	10≡	10●	10●	5.4	● sch. n, ≡ ● a, ● sch. p.
3	97.0	03.7	05.5	05.8	0.2	1.0	0.8	2.7	2.6	85	78	81	75	SW 4	W 3	SSW 4	S 3	10*	10	10	10	0.1	*⁰ n, * ●⁰ a.
4	05.5	06.7	09.3	11.4	0.8	4.7	5.2	5.7	5.4	95	92	94	88	SE 3	E 5	ESE 5	SE 4	10●	10●	10	10	0.5	● n, a.
5	13.4	11.7	10.8	11.2	4.3	4.8	5.3	6.5	6.7	79	85	94	96	E 5	ENE 8	E 8	E 7	10	10●	10●	10	0.6	● n, a, ≡ ● p.
6	12.9	14.3	13.7	11.2	5.3	7.0	6.7	5.6	5.7	96	96	84	88	E 6	ENE 6	E 8	NE 8	10≡	10≡	9≡	10	3.0	≡ n, a, p.
7	05.8	04.2	03.7	03.4	6.7	8.2	7.6	8.3	7.9	82	91	89	91	E 7	E 7	E 7	ENE 7	7	10●	10	10●	0.0	≡ ● a, p.
8	03.2	02.0	00.9	00.0	5.6	7.8	**8.8**	8.6	5.6	93	88	73	92	E 5	E 5	ENE 5	ENE 5	10	10●	10●	10●	2.0	● a, p.
9	98.6	98.4	97.1	94.3	4.7	6.9	6.6	7.0	5.0	89	91	86	92	ENE 5	ENE 5	NE 5	NW 1	8	10	10●	7≡	3.2	≡ ● p.
10	92.9	92.5	94.0	95.4	1.2	5.0	5.4	4.4	3.5	92	96	95	96	WNW 1	E 4	E 2	SE 4	10●	10●	10●	10	1.5	●⁰ a, p.
11	95.8	94.6	95.8	98.7	3.5	5.0	5.7	5.5	4.8	91	87	92	92	SE 3	E 6	SSE 6	SSE 4	10	10	6●	10●	2.4	● n, p.
12	01.0	02.0	02.1	00.0	2.0	4.5	3.5	5.3	6.2	89	87	83	90	ENE 2	ENE 1	ENE 4	E 5	10	1	10	6	3.5	
13	97.7	97.7	00.5	04.1	-0.5	4.7	4.7	3.0	-0.4	83	87	88	94	N 3	N 1	NW 7	WNW 7	10●	10●	10●	10●	1.4	● zeitw. n, a, p.
14	08.8	10.6	09.9	06.9	-0.4	2.4	3.2	3.8	5.1	81	74	95	95	W 5	WSW 4	ENE 6	E 5	10	10	10●	10●	0.5	●⁰ n, a, p.
15	01.1	00.2	99.9	98.0	3.2	5.2	4.4	4.8	4.8	95	95	95	95	E 1	0	SE 2	E 4	10●	10	10≡	10≡	4.1	● n, ≡ p.
16	95.6	92.8	93.7	93.6	1.4	5.1	4.5	4.3	1.4	92	96	90	86	E 4	E 3	SW 2	W 1	10●	10●	10	10	2.0	●⁰ n, mg.
17	97.3	03.8	09.5	12.8	-7.0	-0.2	-3.2	-4.6	-6.5	94	98	66	78	N 9	NW 9	NW 7	NNW 6	7*	10*	9*	10	0.2	*⁰ sch. n, a, p.
18	16.3	16.3	15.5	09.9	**-10.6**	-6.4	-6.3	-5.4	-5.6	73	70	88	86	N 5	N 5	ESE 2	NW 1	8	8	10*	10*	0.0	*⁰ n, a, p.
19	03.3	09.3	09.9	10.6	-8.2	-7.3	-7.0	-7.6	-7.4	74	62	85	66	N 7	N 6	WNW 6	N 6	8	9	10*	8*	3.0	* n, *⁰ sch. a, p.
20	09.0	09.2	08.6	09.2	-8.0	-7.2	-7.6	-5.8	-5.4	83	81	75	68	N 6	N 6	NW 7	N 6	9*	9	10*	9*	0.3	*⁰ sch. n, a, p.
21	09.0	07.2	07.9	07.5	-7.6	-4.6	-4.4	-4.2	-4.7	79	65	70	79	WNW 6	NW 7	WNW 5	NW 5	10*	9	10	10*	0.2	*⁰ n, p.
22	06.8	06.0	06.0	04.7	-4.7	-3.6	-2.7	-1.4	-3.4	74	77	59	68	W 5	W 4	SW 4	WSW 1	10*	10	10	4	0.0	*⁰ n.
23	01.7	99.9	99.1	96.6	-3.4	0.2	0.5	0.6	2.3	74	87	82	82	S 3	SW 1	NNW 1	ENE 4	10	9	10	10	0.1	
24	84.5	79.8	83.7	90.4	0.5	5.1	4.1	2.2	1.1	85	93	82	80	ENE 8	SW 2	SSW 7	W 7	10●	10	4	10*	8.5	●² n, * abd.
25	96.8	96.4	96.8	97.9	0.9	1.3	1.8	2.4	3.2	83	85	88	92	NW 2	ENE 4	S 1	S 2	10	10●	9≡	10	0.0	●⁰ a, ≡ ● p.
26	97.2	96.7	97.5	98.4	1.0	3.7	3.0	1.8	1.2	96	97	90	93	E 1	E 1	WNW 5	WNW 6	10●	10≡	10≡	10●	3.5	≡ ● n, ≡ a, ●⁰ p.
27	01.6	02.6	03.0	02.6	-2.0	-0.8	-1.6	-0.8	-0.6	85	79	76	94	N 6	NNW 4	NNW 2	N 1	6	4	10	6	0.2	●⁰ n.
28	02.9	02.7	03.0	01.7	-2.3	-0.2	-1.6	-1.2	-1.8	99	90	86	84	NW 3	NW 3	ENE 2	ENE 3	10●	5	10	6	0.0	≡ ●⁰ n.
29	99.6	00.1	02.5	04.3	-6.2	-2.6	-1.2	-3.2	-6.2	92	69	83	77	E 2	N 4	N 7	N 7	3	5	8	5		● * u. * sch. a.
30	04.9	07.6	09.3	09.6	-6.8	-6.1	-6.6	-5.4	-5.4	82	72	84	60	N 4	N 1	NNE 1	E 4	5	4	8	8	0.0	
31	07.4	06.8	06.1	05.9	-7.6	-7.2	-7.4	-6.1	-6.4	67	68	67	61	N 5	WNW 4	WNW 3	NNW 1	8≡	6	6	5		≡ n.
M.	00.6	01.2	02.0	01.9	-0.9	1.5	1.4	1.6	0.9	86	84	83	84	4.5	4.2	4.6	4.6	9.0	8.6	9.3	8.8	50.6	

H = 21 m, H_b = 23.1 m
C_g = 2.35 mb bei 1012 mb

φ = 70° 59′ N
λ = 8° 18′ W

November.

Datum.	Luftdruck. 900 oder 1000 + 2	8	2	7	Luft-Temperatur. Min.	2	8	2	7	Relative Feuchtigk. 2	8	2	7	Richtung und Stärke des Windes. 2	8	2	7	Bewölkung. 2	8	2	7	Niederschl.	Bemerkungen.
1	07.0	07.0	07.2	06.1	-9.0	-7.2	-7.8	-8.4	-8.5	68	54	61	63	N 5	N 5	N 6	N 5	8♊	9	8	5		♊ n.
2	05.8	04.8	05.9	07.4	-9.1	-7.4	-8.8	-7.1	-7.8	82	75	64	63	N 5	N 5	N 5	NNW 5	10*	6	8*	7	0.0	*° sch. n, a, p.
3	07.4	01.6	97.6	93.8	-8.8	-8.4	-3.8	-5.5	-4.8	75	94	74	85	NW 4	SSE 5	WSW 5	W 6	6	10*	10	10	0.1	*° sch. n, a, p, ♊ abd.
4	96.5	97.1	95.4	94.4	-5.5	-4.6	-4.6	-3.4	-2.6	73	73	85	87	N 4	NNW 2	ENE 5	ENE 5	5	10	10	10	0.0	*° sch. n, p.
5	93.9	93.4	96.2	04.4	-5.3	-2.0	-1.8	-1.5	-3.2	78	82	87	90	ENE 5	ENE 5	WNW 3	NNW 6	10	10	8	6*	0.0	*° n, *° sch. p.
6	12.7	15.4	14.6	09.2	-5.3	-5.3	-3.8	-1.5	-2.3	84	80	80	95	NW 7	NW 4	W 3	SE 2	3	7	10	10*	0.0	*° n, * p.
7	04.8	08.6	08.9	02.8	-3.8	0.6	-0.2	0.1	4.1	94	92	94	88	W 5	W 5	WNW 3	SE 1	10	10	10	10●	3.0	* n, ●° a, p.
8	00.1	01.4	01.6	04.6	-0.2	2.8	2.6	2.7	2.0	78	65	78	91	SW 6	SSW 5	W 7	W 3	1	1	6	10	0.9	≡ a, p.
9	06.3	05.3	04.6	04.6	1.0	1.7	1.6	1.7	1.2	91	94	96	97	NE 4	E 3	E 1	E 1	10	10	10	10	0.5	≡ a, p.
10	03.3	02.1	03.3	05.1	1.2	3.2	3.6	3.4	4.0	93	89	94	93	E 4	ENE 5	ESE 2	E 4	10	10	10●	10	0.1	≡ a, ● p.
11	06.8	07.2	07.6	07.2	3.6	4.5	4.4	4.6	4.4	92	96	95	96	E 4	E 6	E 7	E 5	10	10●	10●	10	3.8	●° a, p.
12	09.6	08.9	10.6	10.8	2.6	4.0	3.3	2.8	2.6	97	96	92	87	E 4	SE 4	E 3	E 3	10	10	8	10	0.1	●° n, a.
13	09.9	11.4	13.0	13.2	2.0	2.4	2.4	2.8	3.4	93	94	95	90	SSE 2	0	S 3	ESE 3	10	2	10	10	0.0	●° n, a.
14	12.3	06.2	04.8	02.3	2.4	3.4	3.6	3.2	2.8	86	92	94	94	SE 3	SSE 6	S 5	S 5	10	10	10	10	1.5	● n, ≡ a, p.
15	02.2	02.2	04.2	05.9	-0.1	2.2	2.6	0.6	0.4	96	94	94	94	S 3	S 3	W 1	W 2	10≡	10≡	10≡	10≡		≡ n, ≡ ●° a, p.
16	06.9	04.1	01.9	01.8	0.4	0.5	2.4	3.5	1.0	96	97	94	94	W 1	NE 4	ENE 3	SE 3	10	10●	10●	10	0.8	≡ ●° n, ≡ ● a, p.
17	84.6	78.9	76.2	75.3	-3.7	3.5	2.6	1.2	-1.2	96	96	85	84	ESE 4	SE 3	SE 4	WSW 7	10●	10≡	10	10	8.6	≡ ● n, ≡ ●° a.
18	81.3	82.0	85.9	89.7	-7.2	-3.0	-1.4	-4.4	-6.6	87	75	75	61	W 7	W 6	WNW 10	W 11	10*	10*	10*	10*	1.5	*° sch. n, a, p.
19	00.4	07.1	09.6	05.1	-6.8	-6.6	-5.6	-4.5	-2.4	72	78	73	81	W 10	W 8	NW 5	E 4	10	10	10	10	0.0	*° n.
20	84.4	84.9	83.4	81.3	-5.6	2.0	-1.8	-0.3	0.1	91	83	94	89	SW 4	W 6	NW 2	NW 3	10	10	10*	10●*	0.6	* n, ● * p.
21	86.8	92.2	94.1	92.9	-8.6	-4.6	-6.0	-7.7	-8.4	81	73	63	68	NW 6	NW 5	NW 5	N 5	10*	10	8	4	1.6	*° n.
22	91.5	91.1	91.1	89.5	-10.0	-7.5	-8.6	-8.5	-9.5	75	68	66	64	NNW 3	NW 1	NW 2	N 4	10*	10*	10	8	0.0	*° n, a.
23	88.3	87.9	86.5	88.1	-11.2	-9.4	-10.6	-8.8	-5.8	61	61	75	88	NW 4	W 5	NNW 2	N 7	9	8	10*	10	0.3	* sch. n, * a, p.
24	93.9	97.9	05.6	10.3	-10.6	-5.2	-5.2	-1.4	-2.2	88	93	84	70	NW 9	N 10	NNW 1	N 8	10●	10*	10*	7*	6.8	* sch. n, *° sch. a, p.
25	16.2	17.7	18.3	18.3	-5.2	-4.2	-3.6	-3.6	-3.2	86	83	90	79	N 6	N 7	WNW 4	0	5*	8*	10*	8	1.4	* sch. n, a, p.
26	18.6	19.3	20.6	19.8	-11.7	-5.0	-6.2	-6.4	-7.4	85	79	81	70	W 3	NW 1	S 2	NNW 4	5	4	10*	3	3.3	* mtg.
27	18.2	18.6	19.3	18.8	-10.4	-7.8	-7.2	-9.6	-8.6	67	73	74	66	NNW 2	N 3	N 2	N 2	0	2	3	0	0.1	
28	18.7	19.2	20.7	21.0	-9.6	-8.2	-8.0	-5.6	-5.5	76	72	72	68	NNE 3	N 3	N 3	N 3	0♊	1	10	10		♊ SW-NE n.
29	20.9	20.3	20.0	19.3	-9.1	-6.2	-6.2	-8.6	-7.7	75	70	78	75	N 1	N 3	NW 5	N 2	2	5	4	2		
30	18.3	18.4	19.0	20.5	-8.6	-5.3	-3.4	-3.5	-4.1	62	94	77	69	N 2	NE 8	NE 7	NE 5	3	10*	10	10	0.1	*° sch. a, p.
M.	03.6	03.7	04.3	04.1	-5.1	-2.6	-2.5	-2.5	-2.5	83	82	82	81	4.3	4.5	3.9	4.1	7.6	8.1	9.1	8.3	35.1	

December.

Datum.	Luftdruck. 900 oder 1000 + 2	8	2	7	Luft-Temperatur. Min.	2	8	2	7	Relative Feuchtigk. 2	8	2	7	Richtung und Stärke des Windes. 2	8	2	7	Bewölkung. 2	8	2	7	Niederschl.	Bemerkungen.
1	20.1	19.2	18.3	16.6	-7.3	-4.9	-6.3	-5.5	-5.1	73	72	70	71	ENE 4	NE 3	ENE 2	N 1	5	1	10	10	0.2	
2	14.6	13.3	13.0	13.3	-6.3	-5.7	-4.9	-3.1	-1.7	73	69	87	77	N 1	WNW 1	NE 5	ENE 3	10	10	10	4		* a.
3	13.2	12.8	13.2	12.8	-4.9	-2.1	-0.4	-1.1	-0.5	86	84	84	83	ENE 3	ESE 2	NE 1	NE 1	4	8	8	10	0.6	*° n, *° a, p.
4	11.3	08.7	06.6	03.4	-1.1	1.1	1.3	0.8	0.9	83	80	85	83	ESE 5	SE 5	SE 6	E 5	7	10	10	10	0.0	*° a, *●° p.
5	96.9	89.2	84.6	82.3	0.8	2.1	2.5	2.1	2.4	81	93	94	94	NE 6	NE 7	ENE 6	E 5	10●	10●	10●	10	1.8	● n, a, p.
6	82.5	86.0	86.9	85.9	2.0	2.0	2.4	3.0	3.1	96	97	94	94	E 1	E 2	E 2	ENE 6	10≡	10≡	10≡	10●	3.9	≡ ● n, ≡ a, ≡ ● p.
7	85.5	86.4	83.2	72.1	0.7	2.4	1.5	1.5	2.0	96	96	96	88	E 3	E 1	ENE 5	NE 8	10≡	10●	10≡	10●	2.6	≡ ● n, a, p.
8	64.8	65.7	69.5	76.6	-1.1	2.2	1.6	1.0	-0.3	94	94	94	94	0	E 1	WSW 1	WSW 6	10	10●	10●	10*	4.0	● n, a, p, * abd.
9	85.6	80.6	78.4	79.6	-1.5	-1.3	-0.1	2.2	-0.3	91	95	70	82	W 4	ENE 8	ENE 8	NW 3	9*	10	10*	3	2.3	* sch. n, a, p.
10	87.5	91.9	90.6	88.7	-1.1	-0.5	-1.5	-2.4	-3.2	80	88	81	76	E 4	E 3	E 6	ENE 3	10	10	10	10	0.0	
11	90.4	95.0	02.5	05.7	-6.2	-2.6	-3.4	-5.6	-6.2	74	84	76	79	E 1	W 1	NNW 5	NW 3	10	9	10	10		
12	03.8	92.1	74.6	64.5	-6.2	-3.9	-0.8	0.8	1.3	80	95	94	96	NE 5	ENE 7	ENE 10	E 3	10	10	10●	10●	0.0	*° n, a, ● * u. ● p.
13	67.9	79.9	89.3	92.7	-9.8	-5.8	-7.2	-9.0	-9.6	88	89	82	79	NNW 8	NNW 8	N 7	N 1	10*	10*	6*	4	7.9	* n, a, p.
14	95.5	97.1	00.1	01.9	-9.6	-9.0	-8.7	-8.4	-7.6	75	77	68	63	N 4	S 2	N 3	N 1	10	7	10	10	0.3	* a.
15	02.9	04.7	05.6	06.7	-11.6	-9.0	-9.0	-9.2	-11.5	77	70	59	73	N 1	N 5	N 5	NNW 6	8	7	6	4*	0.0	* sch. p.
16	06.3	05.4	07.0	06.1	-11.9	-11.3	-11.6	-10.2	-10.2	82	81	78	86	N 6	NW 7	WNW 7	NNW 6	10*	7*	10*	10*	1.0	* sch. n, a, p.
17	06.2	04.8	03.4	02.8	-11.6	-10.2	-10.2	-10.2	-10.3	78	73	67	70	NW 7	N 5	N 5	N 4	10*	10*	9	4	1.1	* sch. n, a.
18	02.3	01.8	00.6	98.5	-10.3	-8.8	-8.5	-7.6	-6.8	65	68	68	60	N 2	NE 2	NE 3	NE 3	10	10	10	10	0.0	
19	95.8	93.6	96.5	99.6	-8.5	-6.1	-4.8	-4.5	-5.8	62	77	75	71	NE 3	NE 6	NE 5	NNE 2	8	10	5	1		
20	02.8	02.7	04.6	05.7	-6.0	-4.8	-2.6	-2.2	-4.0	61	80	81	80	NE 2	ENE 5	S 1	NW 1	3♊	2	10	1		♊ N 9-12 p, ♊ SW 2 a.
21	99.7	89.4	86.8	92.1	-4.0	0.6	-0.4	0.6	-0.5	78	95	93	87	ENE 7	NE 7	S 4	E 2	10	10	5	3♊	0.0	*° n, ♊ abd.
22	95.1	93.3	85.0	80.7	-4.6	-2.2	-0.2	1.4	2.4	84	72	93	94	NW 1	NE 6	ENE 9	ESE 4	10	2	10*●	10		* ● u. ● p.
23	77.7	73.2	66.9	66.1	-0.2	2.6	2.2	2.8	2.7	94	96	92	90	E 5	E 7	E 6	SE 5	10●	10●	10≡	10≡	9.0	≡ ● n, a, ≡ p.
24	65.0	70.8	80.0	85.8	-4.5	1.8	-2.2	-4.0	-2.8	71	81	74	79	N 5	W 6	W 6	W 2	10	9	2	5	3.0	♊ n.
25	88.4	87.1	85.8	85.5	-4.0	1.2	1.2	2.1	1.7	85	85	87	96	SE 4	E 6	E 7	SE 4	4	4	10	10●		●° p.
26	83.4	82.6	87.9	89.1	-2.7	2.6	-0.4	-1.4	-1.6	94	94	80	75	E 5	W 5	WNW 6	0	10●	10*	10	2	3.8	● n, * a.
27	87.8	82.3	76.7	70.4	-2.7	-2.4	-2.6	-1.4	-0.2	74	77	52	49	NW 3	E 7	ENE 9	NE 10	1	1	4	7	0.0	△ a, p.
28	70.8	73.2	75.1	75.0	-2.6	2.0	1.7	0.3	1.4	87	84	89	83	NE 9	ENE 10	NE 7	NE 9	10●	8	10*	3	0.2	● n, △ u. * a, p.
29	79.1	79.1	79.3	78.0	-5.0	-2.5	-2.0	-3.4	-5.0	93	64	73	91	NNE 10	NE 5	NNE 9	NE 10	6	4	5△	10	0.0	△ a, p, * abd.
30	78.1	74.6	69.8	68.4	-5.0	-5.0	-4.4	-4.4	-4.1	89	81	76	69	NE 7	NE 9	NE 10	NE 9	6	3	8	10	4.0	* sch. n, a, △ p.
31	68.6	70.7	72.4	73.2	-4.4	-3.0	-2.2	-2.5	-2.3	73	70	78	75	N 5	SW 3	ESE 2	NE 2	8*	10	10	10	0.0	*° n.
M.	91.3	90.6	90.1	89.7	-4.9	-2.6	-2.6	-2.5	-2.6	81	83	80	80	4.2	4.9	5.4	4.1	8.4	7.8	8.6	7.5	45.7	

Jan Mayen. **1925.**

$H = 21$ m, $H_b = 23.1$ m

$C_y = 2.35$ mb bei 1012 mb

$\varphi = 70^0\ 59'$ N

$\lambda = 8^0\ 18'$ W

Januar.

Datum.	Luftdruck. 900 oder 1000 +				Luft-Temperatur.					Relative Feuchtigk.				Richtung und Stärke des Windes.				Bewölkung.				Niederschl.	Bemerkungen.
	2	8	2	7	Min.	2	8	2	7	2	8	2	7	2	8	2	7	2	8	2	7		
1	73.8	73.3	73.0	70.8	-3.2	-3.2	-1.8	-1.9	-1.5	72	78	71	70	W 2	SSE 3	SE 1	SW 1	6	10	10	10		♖ n.
2	67.4	63.6	61.4	59.8	-3.8	-3.8	-1.5	-0.8	-0.5	75	70	74	77	0	SE 1	W 4	NNE 2	0	7	5	6		
3	59.8	60.4	61.7	64.0	-2.2	-1.8	2.0	1.4	0.6	89	70	66	71	NW 1	NNE 5	NE 3	SW 2	8	9	10	10	0.1	✱⁰ n.
4	69.6	72.7	75.9	77.9	-2.0	0.4	-0.8	-0.8	-1.7	84	73	73	75	W 3	SSE 1	W 4	0	8*	8	9*	10	0.0	♖ u. ✱⁰ n, ✱⁰ a, p.
5	80.9	83.3	85.7	87.5	-4.1	-1.2	-2.0	-3.5	-3.7	79	74	90	90	0	0	N 7	N 9	10	10	9	10	0.0	✱⁰ n.
6	92.3	94.6	96.2	95.7	-8.7	-5.6	-7.6	-8.5	-8.2	88	81	83	76	N 10	N 10	N 5	N 1	10	7	5*	10*	0.5	✱⁰ n, p.
7	92.8	90.5	90.7	91.1	-8.5	-8.1	-8.2	-7.3	-6.4	76	78	79	83	E 3	NE 1	0	0	10	5	3	1	0.0	✱⁰ n.
8	91.9	92.0	94.0	94.6	-9.4	-4.6	-5.8	-8.2	-9.1	75	71	90	72	0	NNE 2	NNW 5	NNW 5	8	10	10*	5		✱⁰ a, p.
9	95.7	95.4	98.6	02.5	-10.4	-10.4	-10.2	-7.8	-5.4	78	83	86	72	N 6	NW 8	NW 7	NW 5	10*	10*	10*	9	0.0	✱⁰ n, a, p.
10	02.1	94.9	85.2	78.5	-10.2	-7.8	-7.3	-2.9	-1.8	77	91	78	89	E 6	ENE 8	E 9	E 10	6	10	10	10	0.0	✱⁰ p.
11	74.0	69.9	69.6	80.0	-9.4	1.2	1.1	-0.7	-8.8	94	93	93	85	E 7	E 1	SSW 6	WNW 9	10●	10	8*	10	4.1	◍ n, a, ◍ u. ● ✱ p.
12	87.7	80.8	85.5	90.8	-8.8	-7.6	-6.9	-8.9	-8.8	74	85	82	67	N 5	SSE 1	N 7	NNW 4	10	10	10*	10	1.5	✱⁰ n, a, p.
13	93.5	94.9	93.2	92.0	-8.9	-7.1	-4.8	-0.8	-0.3	80	73	95	89	NW 4	W 3	SSW 6	SW 4	9	3	10*	10	1.2	✱⁰ n, a, p.
14	78.9	68.7	55.0	42.7	-4.8	-3.2	-3.6	1.8	0.4	91	92	78	76	NE 8	ENE 10	ENE 6	W 2	10*	10	10*	10	1.8	✱ n, a, ✱ u. ● p.
15	44.7	61.5	76.4	83.9	-13.5	-4.7	-10.6	-12.7	-13.5	91	88	77	70	N 12	N 11	N 8	N 5	10*	10	9*	10*	12.0	✱ n, a, p.
16	73.7	64.5	74.8	75.6	-13.5	-10.1	-6.1	-6.6	-7.5	80	71	87	82	ENE 6	WNW 3	SSW 3	N 3	10*	10	10*	10*	3.0	✱⁰ n, ✱ mtg. p.
17	87.4	91.1	90.0	70.9	**-15.0**	-14.6	-12.3	-9.9	-4.5	81	87	70	91	W 7	NW 2	NW 3	NE 8	10*	10*	9	10*	1.2	✱ n, a, p.
18	63.2	82.8	90.1	88.3	-12.3	-8.5	-11.2	-12.0	-11.0	83	77	75	66	N 12	N 6	N 5	ENE 5	10*	10*	8*	10	8.5	✱ n, a, p.
19	96.0	06.4	16.8	07.0	**-15.0**	-12.9	**15.0**	-13.5	-9.2	80	89	83	87	NW 7	W 9	NW 6	E 8	7*	7*	10*	10*	3.1	✱ u. ♖ n, ✱⁰ a, p.
20	96.5	96.4	89.7	90.9	**-15.0**	2.2	-0.6	1.8	1.0	88	96	96	84	WSW 6	SW 3	E 2	W 6	10	10*	10≡	6	4.8	✱ n, a, ✱ u. ≡ ◍ p, ♖ abd.
21	96.6	92.8	94.2	94.7	-1.4	-0.6	1.9	**3.0**	2.7	95	94	94	96	E 5	E 2	E 1	E 5	10*	10●	10●	10●	5.1	✱ n, ≡ ◍ a, p.
22	97.2	02.4	02.7	92.7	-1.5	1.8	2.0	0.3	1.2	93	70	73	78	SSW 3	W 7	E 6	ESE 7	8	6	10	10*	2.0	✱ p.
23	84.4	84.5	03.1	09.7	-4.2	1.6	0.0	-4.2	-3.8	94	94	78	84	SSW 6	W 5	NNW 7	WNW 1	10●	10*●	10*	10	4.5	◍ u. ◍ ✱ n, ✱ a, p.
24	11.0	15.2	19.1	21.8	-4.4	-2.6	-3.8	-4.4	-3.0	83	75	73	82	WNW 3	WNW 6	WNW 6	NW 4	10*	6*	6	4	0.1	✱⁰ n, mg.
25	24.9	28.3	28.9	25.9	4.4	-1.4	-2.8	-0.5	-0.1	85	95	94	96	WNW 6	NW 1	0	SE 1	5	10≡	10≡	10	0.0	♖ n, ≡ ◍⁰ a, p.
26	24.3	21.7	19.5	17.8	-2.8	-1.7	-0.2	0.6	0.9	97	96	93	91	WNW 1	NW 1	SW 2	NW 1	10≡	10≡	9	4	0.0	≡ n, a.
27	14.6	12.6	10.5	07.5	-0.2	0.8	0.9	1.5	1.6	94	96	91	93	SW 3	WSW 1	S 2	ESE 1	10	10≡	10	10		≡ a.
28	04.5	02.3	01.2	98.1	0.4	0.7	0.4	1.1	0.9	97	97	94	96	SE 1	S 3	S 2	ESE 4	10●≡	10*●	10≡	10	0.5	≡ ◍ n, ◍ ✱ mg. ≡ a, p.
29	92.6	90.7	87.0	84.6	-0.2	1.2	0.5	-0.2	1.6	94	94	96	90	SE 5	SE 4	SE 3	ESE 5	10*●	10≡	10	10	2.0	◍ ✱ u. ≡ n, a.
30	83.4	81.9	81.5	79.4	-1.0	1.7	1.7	-0.3	0.2	81	67	76	89	E 3	ENE 5	N 2	E 2	2	3	9	8	0.7	✱⁰ abd.
31	75.8	73.1	72.8	73.0	-1.7	0.5	-0.5	-0.6	-1.7	85	94	92	85	N 3	NW 3	NW 1	0	10*	7*	9*	7	0.0	✱⁰ n, a, p.
M.	88.1	88.5	89.8	88.7	-6.4	-3.5	-3.6	-3.4	-3.2	85	83	83	82	4.6	4.1	4.2	3.9	8.6	8.6	9.0	8.7	56.7	

Februar.

Datum.	2	8	2	7	Min.	2	8	2	7	2	8	2	7	2	8	2	7	2	8	2	7	Niederschl.	Bemerkungen.
1	76.2	81.2	87.7	91.4	-2.6	-2.0	-0.4	-1.0	-0.5	92	73	90	90	0	N 3	NW 6	NW 4	6	3	10*	10	0.0	✱⁰ n, mtg.
2	91.9	81.5	65.2	58.6	-2.5	-0.5	-1.5	-0.4	-0.6	88	80	88	85	NW 1	ESE 7	E 9	SSE 6	10	10*	10*	10*●	1.1	✱ n, a, ✱⁰ u. ✱ ◍ p.
3	63.8	67.5	68.9	68.1	-3.5	-2.5	-3.5	-3.0	-1.8	86	85	80	84	SW 7	SSW 8	SSW 5	E 5	10*	10*	10	4	2.0	✱ n, ✱⁰ mg.
4	72.7	76.2	79.2	81.9	-3.5	-3.0	-3.5	-1.2	-2.8	80	94	80	80	N 4	NW 5	NW 5	ENE 6	10	10*	10*	10*	0.3	✱⁰ n, a, p.
5	79.5	74.3	75.9	80.3	-7.3	-4.7	-6.2	-4.4	-7.0	91	85	64	84	E 10	NE 11	W 6	N 9	10*	10*	7*	8*	8.3	✱ n, ✱⁰ a, p.
6	83.3	88.6	91.7	93.4	-10.5	-8.6	-9.5	-10.2	-10.5	90	81	67	67	N 10	NE 7	N 8	N 7	5*	8*	8*	10*	3.7	✱ sch. n, a, p.
7	91.0	86.4	85.0	82.1	-10.9	-10.2	-9.6	-8.2	-8.2	60	74	76	70	NNW 4	NNW 1	E 7	N 1	9	10*	10*	10	0.3	✱ zeitw. a, mtg.
8	77.5	69.1	56.7	54.1	**13.7**	-7.7	-10.3	-6.4	-4.0	67	70	92	94	NNW 1	NE 8	NE 12	ESE 5	10	10*	10*	10	0.0	✱⁰ n, a, ✱ u. △ p.
9	57.6	52.3	46.3	54.2	-10.3	-6.2	-6.2	-1.2	0.3	89	79	96	89	W 6	N 11	N 10	NNE 6	10*	10*	10*	10	20.0	✱ n, a, ✱ sch. p.
10	59.1	63.3	66.8	62.6	-6.2	-1.5	1.7	-1.2	-2.6	89	79	96	89	E 7	NE 8	ENE 6	NNE 10	8	10△●	10*	10△	2.3	✱⁰ n, △ u. ◍ ✱ a, p.
11	67.0	67.5	69.4	72.8	-2.6	1.0	-0.1	-0.2	-1.3	96	95	85	58	N 6	NE 4	SSE 4	WSW 4	8*	9	5	10	6.3	✱ n, ✱ sch. a.
12	75.0	75.4	75.6	76.4	-1.2	0.4	0.0	0.6	-0.2	89	94	81	91	N 6	N 6	NE 7	ENE 4	10*	10*	8*	10*	0.1	✱ n, ✱ sch. a, p.
13	79.2	80.0	82.9	86.0	-4.8	-2.8	-3.2	-4.8	-0.6	86	90	89	88	N 7	NE 9	N 9	N 7	10*	10*	10*	10*	2.3	✱ sch. n, a, p.
14	95.7	02.0	09.2	14.4	-5.4	0.4	-1.7	-5.4	-5.0	74	80	84	85	N 5	NE 7	N 6	N 7	10	9	10*	5≡	3.5	✱ sch. a, p, ≡ abd.
15	19.4	19.6	18.6	18.3	-8.4	-6.5	-6.8	-6.9	-8.3	81	80	76	75	NNE 6	N 5	N 4	N 1	9	10	9*	10*	0.3	≡ ◍⁰ n, ✱⁰ a, p.
16	17.0	15.8	16.5	16.5	-8.3	-5.6	-4.4	-3.0	-3.3	84	89	95	85	0	WSW 3	0	NE 1	10*	10*	9*	10	1.6	✱ n, a, p.
17	17.5	17.3	17.8	17.7	-5.9	-3.2	-4.7	-4.0	-5.6	87	73	78	84	S 1	SSE 1	SE 1	0	6*	10	6	6	3.6	✱ n.
18	17.7	16.8	17.5	17.1	-5.6	-5.2	-4.2	-4.2	-4.6	74	82	82	75	NE 1	NE 1	NE 3	NE 1	3	5	5	6	0.0	✱⁰ n, ✱ p.
19	17.4	16.3	16.4	16.0	-5.7	-3.5	-4.4	-3.3	-3.0	75	74	78	91	NE 2	NE 2	NE 2	NE 2	4	4	10	10*	0.6	✱ p.
20	15.4	14.1	13.8	12.6	-6.8	-3.3	-5.5	-4.8	-6.4	85	82	73	83	NNE 5	NNE 2	N 3	NE 1	2	4	4	6	1.0	✱⁰ sch. n, a.
21	13.8	14.6	16.1	15.8	-6.4	-1.1	-2.8	-4.2	-4.8	75	78	70	65	E 7	E 6	E 6	E 6	8	9	8	6	0.1	✱⁰ sch. u. ♖⁰ S u. W n.
22	14.5	12.5	10.9	09.2	-4.8	-4.4	-3.8	-3.4	-3.1	78	75	75	78	E 7	E 7	E 6	E 7	2	5	7	9		
23	11.1	11.3	12.3	11.8	-4.5	-2.9	-3.7	-3.2	-2.3	73	60	61	75	NE 6	E 3	ESE 3	E 6	3	2	2	9		
24	09.6	09.9	11.6	14.0	-3.7	0.4	1.3	0.9	0.5	91	89	89	88	E 7	ESE 5	SE 4	SE 5	10	10	10	10≡	0.1	◍ ✱ n, a, ≡ p.
25	15.7	17.0	17.8	17.1	0.5	**2.1**	1.8	0.7	1.5	78	72	73	74	ESE 5	ESE 5	E 6	E 5	10	9	10*●	8	0.1	◍ ✱⁰ mtg.
26	15.6	14.9	15.5	16.6	0.6	0.9	0.9	0.6	1.0	77	80	86	81	ENE 7	ENE 7	E 8	E 8	2	10*●	10*●	10*●	0.0	◍ ✱⁰ n, ◍ ✱⁰ sch. a, p.
27	20.3	21.7	24.1	24.5	-5.7	0.4	0.3	0.1	-3.5	78	68	74	86	E 6	ENE 7	ESE 2	SE 1	2△	9△	5	4	0.0	△ sch. n, a.
28	24.0	22.5	21.5	19.9	-6.3	-5.8	-6.2	-5.8	-6.3	92	77	82	83	NW 1	NW 2	N 2	NW 2	5	10	10	10	0.0	♖⁰ S n.
M.	96.4	96.1	96.1	96.6	-5.6	-3.1	-3.4	-3.1	-3.2	82	80	81	82	4.8	5.4	5.4	4.5	7.2	8.4	8.3	8.6	57.6	

Jan Mayen. 1925.

$H = 21$ m, $H_b = 23.1$ m

$C_g = 2.35$ mb bei 1012 mb

$\varphi = 70^0\ 59'$ N

$\lambda = 8^0\ 18'$ W

März.

Datum.	Luftdruck. 900 oder 1000 + 2	8	2	7	Luft-Temperatur. Min.	2	8	2	7	Relative Feuchtigk. 2	8	2	7	Richtung und Stärke des Windes. 2	8	2	7	Bewölkung. 2	8	2	7	Niederschl.	Bemerkungen.
1	15.3	13.5	16.6	17.6	-9.8	-4.1	-6.9	-9.6	-9.8	84	82	79	71	NNE 4	N 7	NNE 7	N 5	10	10*	6*	10	2.8	* n, a, p.
2	15.7	10.4	07.8	05.7	-9.8	-7.7	-1.8	0.6	0.8	70	87	94	93	NW 2	NW 5	W 5	W 5	6*	10	10*•	10*•	0.6	* n, * ● a, p.
3	99.8	96.9	89.9	94.2	-9.5	0.5	-1.3	-3.1	-8.2	89	81	84	87	W 4	W 4	W 5	NW 9	7*•	8	6*	10*	3.0	● * n, * sch. mtg. p.
4	03.5	05.8	07.2	04.4	-8.5	-8.5	-7.7	-5.5	-6.2	78	65	50	73	N 10	N 8	NNW 7	WNW 4	10	5	4	7	0.7	* n.
5	92.2	76.4	79.6	88.9	-7.7	-4.0	-1.0	-1.4	-1.8	88	85	82	82	SE 4	ENE 9	NE 8	N 2	10*	10	10*	8*	0.6	* n, a, p.
6	94.7	93.5	94.6	98.2	-4.2	-2.8	-2.8	-1.0	-2.5	84	80	72	81	N 2	NW 2	NE 7	NE 7	6	10	8*	8	0.7	*⁰ n, * a, p.
7	02.7	05.8	06.5	06.4	-6.8	-5.0	-6.3	-6.0	-6.8	85	83	79	80	NE 8	NE 4	NNE 8	NNE 9	8	8*	7*	7	0.5	* sch. a, p.
8	06.0	07.8	12.8	18.6	-7.0	-6.2	-4.3	-3.0	-3.8	83	84	89	90	N 7	N 10	N 10	N 7	9*	8*	10*	10	1.6	* sch. n, a, p.
9	22.7	23.8	24.2	13.6	-9.1	-4.3	-5.4	-5.1	-9.1	80	72	69	65	N 8	N 6	N 5	ENE 1	5*	4	10	7	6.1	* sch. n.
10	22.1	22.5	24.7	25.0	-9.1	-6.0	-5.4	-4.1	-6.2	65	64	54	58	NE 4	NE 3	ENE 1	N 2	10	10	2	1		
11	28.2	27.2	25.6	23.1	-7.5	-5.8	-3.8	-0.2	-0.2	55	75	96	96	N 2	E 3	SSE 3	SE 4	1	10	10	10*•		● * abd.
12	17.9	14.9	14.8	13.7	-3.8	0.2	0.8	1.0	1.1	94	94	94	93	S 4	E 3	SE 4	SE 6	10•	10•	10•	10	2.0	●⁰ n, a, p.
13	11.5	11.4	12.8	14.9	0.3	1.2	0.9	0.8	0.3	93	93	93	92	SE 7	SE 5	SE 6	SE 5	10•	10•	10*•	10*•	0.4	● n, a, * ● p.
14	16.5	17.1	18.4	18.2	-0.6	0.0	-0.1	0.0	-0.6	93	74	78	79	SE 6	ESE 5	E 4	E 4	10	10	2	3	0.1	* ● n.
15	16.0	12.2	06.1	98.2	-1.8	-1.8	-0.3	-0.8	-0.5	99	94	99	95	E 5	SE 5	SE 7	E 8	5	10	10*	10*	0.0	*⁰ sch. n, * mtg. p.
16	92.7	91.6	95.9	98.3	-3.6	-0.4	-2.8	-0.7	-2.2	77	82	83	64	NW 3	NW 2	SW 4	WSW 5	10	10	10	8	0.8	* u.
17	00.5	99.3	87.7	84.5	-2.8	-0.6	-0.2	0.2	0.2	82	82	94	92	WSW 6	S 5	ENE 4	SW 2	9	10	10*	10*•	0.0	* n, * sch. a, * ● p.
18	83.1	85.0	89.8	91.1	-4.3	-0.8	-2.7	-4.3	-0.8	93	87	89	92	SE 3	W 6	W 5	N 5	10	10*	10*	10*	1.0	* ● n, * a, p.
19	97.8	03.0	11.2	13.9	-6.0	-2.5	-3.3	-4.5	-6.0	90	94	87	88	N 5	NE 6	NNW 5	NNW 10	10*	10*	10*	10*	2.5	* n, *⁰ a, p.
20	19.3	20.0	18.3	14.6	-8.3	-8.1	-7.7	-5.5	-5.2	69	65	62	73	N 5	N 6	NNW 2	NW 1	10*	8	6	6	2.2	* n.
21	10.0	09.5	11.5	13.8	-10.1	-5.4	-4.4	-5.3	-8.7	83	78	90	77	WNW 3	NW 5	N 7	N 7	10	10	10*	10*		* a, p.
22	17.1	15.6	13.7	10.2	-11.3	-10.3	-11.3	-10.3	-10.3	75	79	62	70	N 6	N 5	NNW 3	N 1	8*	10*	5	10	1.0	* n, * sch. a, p.
23	06.3	06.7	10.1	12.7	-11.3	-8.1	-7.3	-5.2	-6.8	74	75	68	67	E 6	E 6	E 3	NW 2	8*	9	3	9	0.0	* n.
24	14.1	18.3	19.8	18.6	-8.8	-6.8	-8.3	-8.2	-7.7	61	76	71	81	NNE 8	N 7	N 6	NNW 6	3	3	10*	10*		* sch. mtg. p.
25	18.2	17.9	18.2	17.7	-9.0	-7.2	-8.2	-7.7	-9.0	84	80	70	65	N 6	N 6	N 4	N 2	4*	10*	8	7	0.6	* sch. n, a.
26	14.9	12.6	08.0	98.9	-9.0	-5.3	-4.5	-5.2	-5.4	78	91	88	92	E 4	ESE 6	ENE 8	NE 10	10*	10*	10*	10	0.2	*⁰ n, * a, p.
27	89.0	92.0	94.4	91.8	-9.4	-5.8	-7.5	-8.9	-9.2	90	85	85	89	N 11	NW 10	N 11	N 12	10*	10*	10*	10*	35.0	*² n, * a, p.
28	91.2	93.7	97.3	98.8	-9.2	-5.8	-1.8	-0.5	-0.9	90	92	90	91	N 11	NNW 8	N 8	NW 7	10*	10*	10*	10*	11.0	*² n, * a, p.
29	01.6	02.3	02.4	00.6	-2.0	0.8	-1.0	-1.4	-0.6	78	90	93	65	N 6	N 6	NNE 8	NW 4	4*	4*	8*	4	2.2	* n, a, p.
30	00.7	00.4	02.0	02.2	-4.7	-0.8	-1.2	-2.9	-4.2	90	80	91	88	NNE 8	NNE 8	N 8	N 7	7*	8*	10*	10	0.0	* sch. n, a, p.
31	01.5	02.3	02.1	02.6	-11.0	-6.0	-8.2	-10.6	-10.9	90	80	77	74	N 7	N 6	N 6	N 5	8*	10*	10*	10*	1.2	* sch. n, a, p.
M.	07.2	06.8	07.2	06.8	-7.0	-4.1	-4.1	-3.8	-4.6	82	82	81	81	5.6	5.7	5.7	5.3	8.0	8.9	8.2	8.5	76.8	

April.

Datum.	Luftdruck. 900 oder 1000 + 2	8	2	7	Luft-Temperatur. Min.	2	8	2	7	Relative Feuchtigk. 2	8	2	7	Richtung und Stärke des Windes. 2	8	2	7	Bewölkung. 2	8	2	7	Niederschl.	Bemerkungen.
1	02.0	99.9	98.5	99.5	-13.7	-11.4	-12.3	-8.2	-8.7	73	84	87	90	N 6	NNW 7	NW 8	N 7	8*	10*	10*	10	0.9	* n, a, p.
2	00.8	00.0	00.7	02.2	-12.3	-9.5	-8.8	-9.2	-8.2	89	87	79	80	N 8	N 9	N 9	N 9	10*	10*	10*	10	4.1	* n, a, p.
3	02.2	00.9	00.8	03.1	-9.2	-6.8	-5.3	-6.6	-4.5	76	88	89	71	NNE 8	N 5	N 9	NW 4	10*	10*	10*	10	1.9	* n, a, p.
4	03.1	01.6	00.2	95.7	-6.6	-5.0	-5.5	-5.2	-4.5	69	78	92	91	SSW 1	NE 7	NE 10	NE 10	10	10*	10*	10	2.2	* zeitw. n, * a, p.
5	99.9	04.3	08.4	09.2	-5.5	-2.0	-3.0	-2.2	-4.1	73	76	74	82	N 1	SE 1	E 1	N 2	5	5	10*	10	6.5	* n, p.
6	06.4	03.6	00.5	00.2	-5.2	-3.2	-3.4	-2.1	-4.0	76	74	95	86	WSW 4	W 4	SW 5	NW 4	10	10	10*•	10	0.2	* ● a, mtg.
7	08.0	10.6	10.4	09.9	-6.8	-5.9	-6.6	-4.4	-1.2	79	78	78	81	N 4	W 1	E 5	E 4	9	10	10*	10*	0.3	* a, p.
8	04.3	97.5	94.0	91.8	-6.6	0.5	1.6	1.8	2.1	88	94	93	88	E 5	ENE 5	E 1	NW 4	10	10•	10≡	10•	0.0	≡ ● a, p.
9	97.5	99.7	05.0	07.6	-0.7	-0.2	0.1	0.6	-0.7	94	92	91	92	SSW 3	W 4	E 3	ESE 3	10	10•	8	10≡	0.1	≡ ● mg., ≡ a, p.
10	10.7	11.0	10.7	09.2	-0.7	0.6	2.8	1.9	1.9	94	88	94	93	E 2	E 5	E 5	ENE 4	10	10•	10•	10•≡	0.1	≡ ● n, a, p.
11	08.4	08.9	10.4	10.2	-1.2	1.5	-0.3	-1.0	0.7	94	92	92	93	ESE 1	SE 1	0	SSE 1	10≡	10≡	10≡	10≡	0.8	≡ ●⁰ n, a, p.
12	08.3	07.0	05.0	03.5	-1.0	1.7	1.3	1.6	1.4	97	96	94	94	E 4	E 4	ENE 4	ESE 3	10≡	10•	10•≡	10≡	0.3	≡ ● n, a, p.
13	01.2	98.2	98.9	00.7	0.1	1.0	1.6	1.1	0.1	93	94	91	92	E 3	ENE 3	W 4	ENE 3	10•≡	10•	8	10≡	0.7	≡ ● n, ● a, ≡ p.
14	99.8	99.1	96.3	94.0	0.1	1.6	1.4	3.2	3.4	88	94	89	85	E 3	ENE 3	E 5	E 6	10≡	10≡	8	10	0.5	≡ u. ≡ ● n.
15	88.6	88.6	90.6	92.0	0.4	3.1	1.8	1.5	0.4	90	91	92	94	E 6	E 6	E 3	0	10•	10•	10*•	10*	2.0	● n, ● u. ● * a, * p.
16	93.6	94.9	96.6	97.7	0.0	0.1	0.4	1.8	1.4	94	93	79	78	W 1	N 1	W 4	0	10	9	10	7	8.9	* n.
17	99.5	00.9	05.3	07.8	-3.7	-1.3	-0.4	-0.3	-1.6	93	74	76	68	NW 2	NW 1	W 3	W 4	5	5	10	10		△ sch. abd.
18	10.9	11.2	09.5	06.7	-4.5	-4.2	-3.7	-2.5	-3.2	78	54	65	91	N 5	NNE 5	SSW 3	S 4	9	9	10	10	0.0	*⁰ sch. n, a, p.
19	02.2	00.1	01.3	00.1	-3.7	-1.8	-1.0	0.5	-0.2	92	93	81	84	W 5	S 4	W 1	SE 3	10	10*	10	10	1.0	* sch. n, a.
20	91.9	87.6	85.8	90.5	-2.8	0.7	0.0	-0.1	-2.8	91	87	84	89	E 6	SW 3	E 2	NW 9	10*•	10	10	10	0.2	* ● sch. n, a, * p.
21	00.0	01.7	02.0	98.3	-4.3	-3.9	-4.0	-2.3	-2.5	84	88	84	81	NW 6	NW 6	NW 3	E 5	10	10	10	10	1.4	* n.
22	87.8	84.8	85.3	86.5	-4.0	1.2	1.4	2.0	2.3	91	94	91	90	E 7	E 1	E 4	E 5	10*•	10	10	10	2.7	* ● n.
23	89.4	91.5	94.0	93.8	1.2	1.2	1.6	3.1	2.3	87	86	83	76	E 4	E 4	E 5	E 6	10	9	7	10		
24	94.4	95.0	99.0	99.8	0.6	1.3	2.3	4.2	2.5	78	81	74	87	ENE 6	NNW 3	NE 4	SE 2	10	10	10•	10		● sch. mtg. p.
25	01.2	02.0	03.3	05.6	0.2	0.4	2.3	2.8	1.4	87	72	67	86	NW 5	SW 3	W 3	NW 1	9	10	10	9	0.0	
26	07.5	09.3	11.9	13.1	0.5	0.5	1.4	1.3	1.0	89	83	77	63	0	E 3	E 4	E 2	10	10	10*	9		*⁰ mtg.
27	15.3	16.3	18.1	20.3	0.0	0.4	0.0	1.7	1.8	84	94	77	67	E 1	E 3	E 4	E 5	10	10	10	7	0.0	*⁰ sch. n, a, p.
28	24.7	25.1	25.8	24.7	-1.0	-0.2	-0.8	0.4	-0.2	75	76	77	77	E 5	E 2	E 1	SE 1	6	6	8	9	0.1	*⁰ n.
29	23.6	23.0	23.5	22.9	-0.8	-0.1	-0.4	-0.8	-0.7	79	87	88	88	E 1	SE 1	SE 1	S 3	10	10	10	10		
30	21.1	20.3	20.5	20.3	-0.8	0.2	0.5	2.0	1.8	87	89	78	73	SSE 2	SSE 3	SE 3	E 4	10	8	10	10		
M.	03.5	03.2	03.7	03.9	-3.0	-1.2	-1.2	-0.4	-0.8	85	85	84	84	3.8	3.6	3.9	3.9	9.4	9.4	9.6	9.7	34.9	

Jan Mayen. 1925.

H = 21 m, H_b = 23.1 m

C_g = 2.35 mb bei 1012 mb

φ = 70° 59′ N

λ = 8° 18′ W

Mai.

Datum.	Luftdruck. 900 oder 1000 + 2	8	2	7	Luft-Temperatur. Min.	2	8	2	7	Relative Feuchtigk. 2	8	2	7	Richtung und Stärke des Windes. 2	8	2	7	Bewölkung. 2	8	2	7	Niederschl.	Bemerkungen.
1	21.5	22.8	24.0	23.7	-1.8	1.2	1.0	1.3	0.5	83	85	81	74	E 4	E 5	SE 3	N 5	10	10	8	5	0.0	✱⁰ sch. n.
2	22.9	21.7	21.5	21.1	-3.4	-2.6	-2.5	-1.6	-2.2	88	70	67	81	NW 4	N 5	W 1	SW 2	10+	9	10+	10	0.0	✱⁰ n, a, p.
3	21.3	21.0	20.6	20.9	-3.3	-3.1	-2.9	0.1	-1.6	63	75	63	68	N 3	N 4	N 3	N 5	10	10+	9	10	0.0	✱⁰ n, a.
4	20.1	19.3	20.6	21.7	-3.0	-2.8	-1.9	1.4	-0.1	65	92	64	81	N 1	NW 4	NE 3	ESE 4	4	10+	10	10	0.0	✱⁰ n, mg., p.
5	23.3	24.2	25.9	25.7	-2.1	-1.8	-1.7	-0.9	-0.5	75	89	91	89	SE 1	N 2	NNW 3	N 3	7	10+	8	10	0.2	✱⁰ n, mg., ✱ u. △ p.
6	26.7	25.7	26.0	25.5	-2.5	-2.2	-0.6	0.4	-0.4	72	77	89	96	N 1	NE 3	ENE 6	E 6	7	10+	10+	10	0.1	✱⁰ n, a, p.
7	21.2	18.3	14.8	10.7	-0.8	-0.8	0.2	1.0	0.9	96	92	91	94	ESE 6	E 6	E 6	E 7	10✱	10+	10⁺●	10	0.5	✱ n, ✱ u. ✱ ● a, p.
8	08.7	08.1	08.0	06.1	-0.5	0.1	-0.1	0.4	0.0	92	93	94	94	SE 3	S 2	SE 1	SE 1	10✱	10≡	10≡	10⁺●	1.9	✱ n, ≡ ● u. ✱ ● a, p.
9	00.7	98.6	97.9	00.8	-3.9	-0.8	0.0	-0.1	-2.0	93	85	92	80	WNW 1	NNW 3	N 6	NNW 7	10+	10+	10+	10	2.3	✱ n, ✱ u. ✱ ● a, p.
10	04.5	05.3	09.3	10.4	**-5.0**	-4.4	-4.7	-3.8	-3.2	76	75	75	63	WNW 6	WNW 6	NW 6	N 4	10	10✱	10✱	8	0.9	✱⁰ n, a, p.
11	11.9	12.5	13.6	13.2	**-5.0**	-4.3	-2.0	-0.8	-0.4	71	68	75	74	N 2	NNE 2	NE 5	NNE 5	5	8	10	9	0.0	
12	11.5	08.9	07.2	05.3	-2.0	-0.6	1.6	1.2	1.8	87	75	82	78	N 8	N 7	NE 8	NE 8	9	10	10⁺●	10⁺●		● sch. a, ● ✱ mtg. p.
13	02.2	02.4	00.4	00.2	1.2	1.2	1.2	3.8	4.5	82	82	81	85	NE 8	NE 9	NE 7	E 5	10	10⁺●	10●	10●	0.0	● ✱⁰ n, a, ● p.
14	00.6	01.7	03.7	04.8	0.2	4.2	3.2	3.5	2.8	86	93	89	89	ENE 5	E 5	E 5	SE 1	10	10●	10●	10●	1.6	● n, ●⁰ a, p.
15	07.1	09.3	11.9	13.2	0.8	1.0	1.7	2.3	2.1	94	93	94	93	NW 1	0	SW 1	SW 1	10≡	10≡	10≡	10≡	0.0	≡ n, a, p.
16	14.9	15.0	14.9	12.0	0.5	0.5	1.6	4.1	4.1	94	93	85	79	SSW 1	E 5	E 6	ENE 6	10≡	10≡	7	9		≡ n, ≡ ●⁰ a.
17	06.4	04.9	03.1	96.6	1.6	2.8	3.6	2.9	4.4	87	94	94	89	ENE 7	ENE 2	SE 1	WNW 2	10●	10≡	10≡	9	3.0	● n, ≡ a, p.
18	99.3	07.6	13.6	16.1	-0.6	0.6	-0.6	0.7	0.1	84	82	78	82	NNW 8	NNW 6	NW 4	W 3	10⁺●	2⁺●	10	10	2.0	● u. ● ✱ n, a.
19	17.6	17.2	16.1	17.9	-0.6	0.0	-0.2	0.3	-0.7	98	97	87	83	SSW 3	SSW 2	W 3	NW 6	10●	10●	10	9	0.8	● ≡ n, ●⁰ a, mtg.
20	22.3	23.0	25.1	25.3	-2.8	-2.6	-1.5	-0.6	0.3	80	87	82	83	NNW 7	N 7	N 5	SW 1	10	10	7	3	0.3	
21	23.6	20.6	19.1	18.4	-2.0	-1.8	0.9	-0.8	0.8	81	74	87	73	WNW 2	W 4	N 4	SSW 2	0	1	10	3		
22	20.4	22.0	23.4	24.7	-2.0	-1.6	-1.3	3.2	1.7	73	71	70	74	W 5	W 1	S 3	SE 1	10	4	1	9		
23	24.2	23.3	22.4	21.2	-1.3	-0.5	-0.3	-0.2	-1.0	82	68	70	79	NW 3	N 2	SE 1	NW 3	10	10	10△	10		△ 1-3 p.
24	19.2	17.5	16.9	16.8	-1.3	-1.3	-0.9	-0.7	-1.0	76	78	71	73	NW 1	NW 3	NW 3	N 4	10	10	10	10	0.0	
25	17.1	17.1	17.4	15.9	-1.3	-0.6	-1.3	-0.6	0.6	70	84	93	88	0	SW 1	E 3	E 5	10	10+	10+	10	0.1	✱⁰ n, a, p.
26	14.0	10.3	09.5	10.0	-1.3	-0.5	0.4	0.9	0.3	95	91	93	93	E 2	E 5	E 1	WSW 2	10+	10⁺●	10	10	0.3	✱ n, ✱ u. ✱ ● a, mtg.
27	10.2	09.8	09.9	09.0	-0.6	0.0	1.3	3.4	4.1	89	83	80	78	SW 1	SE 1	E 4	E 5	10	10	10	7	0.0	
28	07.9	05.6	04.8	02.6	1.3	2.9	3.8	5.7	4.5	79	62	67	70	ENE 5	ENE 6	ENE 5	W 2	6	8	5	10		
29	00.7	00.0	97.0	94.7	3.8	8.2	9.4	**9.6**	4.8	65	64	71	90	E 6	ENE 7	ENE 6	E 6	8	10	10●	10		● mtg. p.
30	96.0	92.7	89.6	89.8	3.3	5.2	4.7	4.9	5.0	91	93	91	95	ENE 4	E 5	E 2	E 4	10≡	10●	10≡	10	1.7	≡ ● n, ● mg. ≡ a, p.
31	90.3	91.0	91.6	92.4	4.3	5.4	5.6	6.7	5.5	90	95	94	93	E 3	ENE 4	E 5	E 4	10	10●	10●	10	3.2	● n, a, p.
M.	12.5	12.2	12.2	11.8	-1.0	0.3	0.6	1.5	1.2	82	80	82	83	3.6	4.0	3.9	3.9	8.9	9.1	9.2	9.1	18.9	

Juni.

Datum.	Luftdruck. 900 oder 1000 + 2	8	2	7	Luft-Temperatur. Min.	2	8	2	7	Relative Feuchtigk. 2	8	2	7	Richtung und Stärke des Windes. 2	8	2	7	Bewölkung. 2	8	2	7	Niederschl.	Bemerkungen.
1	95.6	97.8	99.3	00.4	2.6	4.2	4.1	6.2	4.2	95	92	88	95	E 3	S 1	SW 3	SE 1	10≡	8≡	10	10●	3.5	≡ ● n, a, ● p.
2	01.6	02.3	04.4	05.0	2.0	2.1	5.3	5.0	4.5	94	89	91	92	0	WNW 2	W 1	S 1	10≡	9	10	10	0.9	≡ ● n.
3	05.9	06.8	08.3	10.0	2.2	4.1	4.6	4.7	3.1	93	86	88	90	ESE 4	NW 1	S 1	SW 1	10●	10	7	10	0.0	≡ ● n.
4	12.3	14.5	16.7	16.9	2.0	2.0	3.1	5.5	6.2	96	92	88	72	0	S 1	S 1	ESE 2	10≡	10	9	10	0.0	≡ ● n.
5	13.6	07.5	03.2	01.8	2.5	5.0	5.1	6.0	2.9	82	88	92	95	E 6	E 8	E 6	SW 1	10	10●	10●	10●	0.7	● n, a, p. [≡ abd.
6	03.7	05.0	05.8	05.8	1.8	2.6	3.7	3.8	3.7	94	93	96	96	SSE 3	ESE 3	E 4	E 4	10≡	10	10	10≡	6.4	≡ ● n, ● a, ● ✱ mtg.
7	06.5	07.0	08.7	10.0	1.0	3.1	2.3	2.2	1.2	93	95	92	93	ESE 1	S 2	WSW 2	SW 2	10●	10	10≡	10	0.2	≡ ● n, ≡ a, p.
8	09.7	07.7	11.1	13.2	1.2	3.1	5.1	6.2	5.1	93	95	95	93	ESE 1	E 5	W 2	NW 2	10	10●	10≡	10	0.1	●⁰ n, ● u. ● ✱ a, ≡ mtg.
9	14.6	15.1	17.0	15.7	1.4	1.9	7.0	8.2	4.8	95	79	80	92	NW 2	W 1	SSE 1	ESE 4	10≡	10	10	10	0.0	≡ n, ● p.
10	13.0	08.8	06.3	03.9	4.0	7.0	5.6	7.2	4.8	82	92	83	92	E 1	E 1	SE 1	E 1	1	10≡	5	10	0.4	≡ ● a, ● ✱ mtg.
11	98.7	94.5	92.8	92.2	1.2	3.5	3.4	3.0	2.6	96	94	97	93	ESE 2	W 2	SW 2	S 1	10●	10●	10≡	10≡	3.9	≡ ● n, a, p.
12	93.1	94.9	96.4	95.2	0.8	0.8	1.8	2.8	3.5	91	85	94	88	WNW 3	N 4	NW 4	N 4	8+	8	10●	10	0.2	✱ n, ●⁰ mtg.
13	93.0	93.3	98.0	01.3	1.5	1.5	2.6	4.5	2.0	93	89	88	88	E 2	E 1	N 6	N 6	10●	10	8●	10⁺●	0.8	● n, mtg. ● u. ● ✱ p.
14	03.5	04.8	04.8	02.8	1.5	1.5	1.9	2.7	2.2	93	91	90	88	NNE 6	N 6	N 5	N 3	9●	9●	10●	9	0.0	●⁰ n, a, mtg.
15	97.9	89.9	83.6	81.7	0.0	0.6	2.0	3.6	5.0	91	87	80	68	ESE 3	E 5	SW 2	NE 5	10+	10●	10●	10●	0.2	✱ sch. n, ● a, p.
16	81.5	82.5	82.1	84.9	0.7	1.4	0.9	1.1	2.1	81	91	89	91	N 7	N 8	NNW 7	NNW 7	10✱	10●	10+	10⁺●	0.4	✱ n, ● a, ✱ p, ✱ ● abd.
17	89.4	99.4	07.3	12.3	0.9	4.2	4.7	8.1	7.1	75	78	74	81	N 7	N 7	N 5	N 4	10	6	3	1	6.4	✱ ● n.
18	14.4	12.9	10.4	05.6	0.0	0.9	0.5	2.8	3.6	94	93	93	94	E 2	W 1	ESE 1	E 1	10≡	10	10●	10●		≡ n, ● a, p.
19	01.0	97.7	00.9	02.4	0.5	3.5	2.3	1.7	2.0	94	90	94	88	E 2	SW 2	NNW 4	N 5	10●	8	10●	8⁺●	3.8	≡ ● n, ●⁰ a, ● ✱ p.
20	07.8	11.7	14.8	16.2	1.6	1.8	2.7	5.3	5.6	86	81	95	89	ENE 3	NW 1	E 3	E 3	9	6	9	10	0.1	
21	16.2	15.4	14.2	12.0	1.0	5.0	2.4	1.2	2.8	95	92	93	94	0	SW 1	S 1	0	10●	10	10≡	10≡	0.0	≡ ● n, p.
22	08.1	06.9	10.3	14.0	1.2	3.1	2.3	6.4	6.5	92	90	76	76	W 1	NW 6	N 6	W 3	10●	10	2	3	0.1	≡ ● n.
23	16.4	16.8	17.0	17.0	1.0	4.2	**8.8**	6.4	3.7	67	53	72	86	NNW 5	N 4	E 5	SE 2	0	0	5	4		
24	18.5	18.4	18.6	19.1	**-1.0**	-0.3	-0.2	2.0	4.0	96	94	91	92	E 1	ESE 1	SE 3	ESE 4	10≡	10≡	8≡	10		≡ n, a, p.
25	19.0	18.8	18.6	18.3	-0.2	2.2	2.5	3.8	4.2	88	86	84	86	E 4	NNW 1	ESE 4	SSW 3	10	10	10	10		
26	18.3	17.6	16.7	16.0	2.3	3.4	2.3	4.0	3.4	92	96	93	92	0	S 1	S 1	S 1	8	10≡	10≡	10≡		≡ a, p.
27	14.6	13.7	12.9	12.1	2.3	3.8	4.5	5.8	5.0	81	77	82	89	E 2	ESE 4	E 4	E 4	10●	10	10	10●	0.0	●⁰ n, p.
28	09.9	08.1	07.9	07.7	4.5	5.0	5.4	6.2	5.8	87	95	95	95	E 5	E 6	E 4	E 3	10●	10●	10●	10●	1.0	● n, a, p.
29	08.7	09.3	11.6	12.9	1.8	3.1	2.3	3.1	3.5	94	94	92	92	SE 2	S 2	S 1	S 1	10●	10	10≡	10≡	0.1	≡ ● n, ≡ p.
30	13.8	13.5	14.1	12.6	2.3	5.7	7.1	7.9	7.4	95	90	89	90	E 5	ESE 5	E 6	E 7	10	10	10●	10●		● mtg. p.
M.	06.7	06.4	07.1	07.3	1.5	3.0	3.5	4.6	4.1	90	88	88	90	2.8	3.1	3.2	2.9	9.2	9.1	8.9	9.2	29.2	

Anhang IV.

BEOBACHTUNGEN AUF HALDDE

1. STÜNDLICHE REGISTRIERUNGEN VON LUFTDRUCK UND TEMPERATUR.
2. TERMINBEOBACHTUNGEN.

1925.

$H = 904$ m, $H_b = 892.8$ m — $\varphi = 69^0\ 56'$ N

$C_g = 1.65$ mb bei 915 mb — $\lambda = 22^0\ 56'$ E

Januar.

Datum	1a	2a	3a	4a	5a	6a	7a	8a	9a	10a	11a	MT	1p	2p	3p	4p	5p	6p	7p	8p	9p	10p	11p	MN	Mittel
	800 oder 900 mb +																								
1	78.8	78.8	78.8	78.7	**78.6**	78.6	78.7	78.8	79.0	79.5	80.0	80.2	80.4	**80.6**	80.4	80.2	80.2	79.6	78.7	79.1	79.8	79.6	79.0	78.8	79.37
2	**77.9**	77.1	76.8	75.6	75.5	74.8	74.3	73.5	73.4	73.2	72.3	72.0	72.0	71.4	71.2	70.7	69.5	69.0	68.0	67.0	64.7	64.8	64.4	**63.9**	71.38
3	62.4	62.8	62.8	62.6	62.4	61.8	61.6	61.2	61.5	60.8	61.4	60.8	**60.4**	61.5	61.5	61.8	61.9	62.6	63.8	64.0	64.3	64.8	65.2	**65.6**	62.48
4	**66.2**	66.4	66.6	66.8	67.0	67.1	67.4	67.8	67.6	67.8	67.9	68.0	68.3	68.3	68.4	68.4	**68.6**	68.2	68.0	68.0	68.2	68.2	68.3	68.4	67.75
5	**68.6**	68.7	68.8	68.8	69.0	69.1	69.1	69.2	69.5	69.6	70.0	70.2	71.0	71.6	71.8	72.0	72.6	72.7	73.4	73.8	74.2	74.4	74.8	**75.4**	71.18
6	**75.6**	75.9	76.3	76.8	77.1	77.2	77.5	78.0	78.2	78.6	79.1	79.6	79.9	80.3	80.7	81.1	81.5	82.2	82.7	83.1	83.6	83.9	84.2	**84.7**	79.91
7	**85.1**	85.2	85.5	85.8	85.9	86.0	86.2	86.3	86.3	86.3	86.4	86.4	86.4	86.7	86.8	86.8	87.0	87.1	87.2	87.2	87.2	87.4	87.5	**87.8**	86.52
8	87.9	88.2	88.2	88.3	88.4	88.6	88.6	**88.7**	88.7	88.6	88.6	88.4	88.4	88.2	87.6	87.2	87.1	86.8	85.9	85.6	85.5	85.4	85.2	**84.8**	87.45
9	84.4	**84.0**	84.3	84.7	84.4	84.4	84.3	84.2	84.6	84.7	85.0	85.0	85.0	85.0	85.2	85.4	85.4	85.8	86.0	86.4	86.6	87.1	87.9	**88.3**	85.34
10	**88.6**	89.4	89.8	90.2	91.0	91.2	91.6	92.0	92.3	92.3	92.6	**93.0**	92.8	92.7	92.4	92.2	91.5	91.2	90.7	90.7	90.4	90.3	90.0	89.6	91.19
11	**89.2**	88.8	89.0	89.1	88.7	88.2	88.2	88.0	88.0	88.2	87.9	87.1	88.0	88.0	87.9	87.6	86.0	84.6	80.4	**79.5**	79.5	80.0	80.2	80.8	85.95
12	**81.6**	82.8	83.6	82.6	83.2	84.7	84.4	85.4	85.6	87.6	89.2	88.7	**88.8**	88.3	87.2	86.4	85.8	84.4	84.4	84.3	84.4	84.4	84.3	84.3	85.29
13	**84.4**	85.0	85.6	85.8	86.4	86.2	86.0	85.9	85.8	85.9	86.2	87.8	88.6	89.2	90.2	90.4	91.5	91.6	92.6	92.8	92.7	93.8	**94.0**	93.8	88.84
14	94.7	94.6	95.0	**95.1**	94.3	93.1	90.3	90.4	89.4	87.6	87.4	86.0	85.2	83.2	82.8	80.3	77.2	74.3	73.0	71.1	69.9	67.2	**66.7**	66.8	83.15
15	**65.8**	64.6	64.3	61.5	60.7	59.0	57.5	53.5	52.4	51.1	51.8	51.0	**49.2**	49.2	51.1	54.3	54.4	55.4	55.8	55.4	54.3	55.8	55.9	58.6	55.94
16	62.3	66.0	67.5	70.8	73.5	75.2	76.7	77.9	**78.6**	77.9	76.8	74.6	73.1	69.6	68.4	67.6	67.6	67.5	67.0	66.7	66.6	64.[illegible]	**60.7**	60.7	69.90
17	**61.6**	64.6	69.1	70.3	73.1	74.6	75.5	76.8	77.5	78.4	80.0	81.4	83.8	83.6	87.5	89.5	90.6	91.9	93.2	94.3	94.4	**94.7**	93.9	93.5	82.24
18	**92.6**	90.6	88.3	86.7	85.5	82.8	84.6	84.4	83.2	82.7	83.0	81.2	80.7	80.6	80.8	81.0	81.0	**80.3**	82.0	81.2	82.2	83.4	83.2	83.6	83.57
19	83.2	82.8	83.2	82.0	81.5	80.7	80.6	80.3	79.9	79.4	79.4	**78.0**	78.6	82.8	86.0	87.8	90.7	92.4	93.2	93.4	92.0	96.3	97.4	**99.9**	85.90
20	00.6	02.2	**03.0**	02.8	02.6	02.4	02.2	01.5	99.6	98.2	97.8	**96.8**	97.5	97.6	97.9	98.3	99.5	99.4	99.2	97.8	98.0	99.0	98.7	98.6	99.63
21	98.2	97.9	98.4	98.7	**97.5**	98.4	99.8	00.2	01.1	01.2	01.8	02.0	04.0	05.5	08.2	09.2	09.9	10.0	09.5	09.8	09.8	10.0	10.0	**11.6**	04.28
22	12.3	**11.5**	12.6	14.3	12.6	13.4	14.3	15.4	15.5	15.6	15.6	15.5	15.5	15.6	15.4	15.5	**15.8**	15.5	15.1	15.0	14.8	14.6	14.3	13.8	14.56
23	**13.1**	12.8	12.2	11.5	11.1	10.2	09.6	09.0	09.0	08.7	08.2	07.6	07.2	07.1	06.6	06.4	06.2	05.6	05.5	05.6	05.6	05.6	05.6	**05.4**	08.14
24	05.1	05.1	05.2	05.4	**04.6**	05.2	05.1	05.8	06.0	07.5	08.7	09.2	09.8	10.4	10.3	10.3	**10.6**	09.9	09.4	08.6	09.0	08.6	07.5	06.8	07.67
25	**05.8**	05.8	06.6	07.2	07.6	07.4	07.1	07.4	07.6	07.9	08.2	08.6	08.8	10.7	11.0	12.2	13.1	13.2	13.4	14.3	14.3	14.3	14.6	**14.7**	10.08
26	14.6	14.6	**14.8**	14.4	14.0	14.2	14.2	13.4	12.8	11.6	10.7	09.5	08.6	08.3	07.5	07.2	06.8	05.6	04.0	04.6	04.2	**03.4**	03.6	04.2	09.45
27	03.6	**02.4**	02.7	02.4	02.8	04.0	03.4	04.8	05.4	**05.5**	05.5	04.8	04.4	03.5	04.3	04.4	04.3	04.4	03.8	04.7	04.4	04.7	04.4	04.2	04.12
28	**04.2**	04.7	04.6	04.3	04.4	04.4	04.6	04.4	04.7	05.6	05.2	05.1	05.8	05.9	06.2	06.3	06.7	**07.1**	06.8	07.0	06.7	06.8	06.8	06.6	05.62
29	**06.2**	06.2	06.2	06.2	06.2	05.8	05.0	04.7	04.4	03.5	02.2	01.1	00.6	99.0	98.7	97.4	96.8	94.8	94.6	93.6	93.1	92.8	92.4	**90.8**	00.10
30	88.4	87.9	88.6	88.2	87.1	87.4	88.6	**88.8**	88.7	88.4	88.0	87.5	86.8	86.7	86.2	86.6	85.9	85.6	86.0	85.6	85.2	85.6	85.2	**84.7**	86.99
31	**85.1**	85.0	84.7	84.0	83.1	82.0	81.9	81.9	81.2	81.2	81.0	80.6	80.4	80.4	79.9	80.0	80.0	**7.96**	80.0	79.8	79.8	79.8	79.8	79.8	81.29
M.	88.00	88.14	88.49	88.44	88.38	88.33	88.35	88.37	88.31	88.23	88.32	87.99	88.06	88.11	88.39	88.53	**88.57**	88.32	88.17	88.06	**87.92**	88.10	87.93	88.08	88.23

Februar.

Datum	1a	2a	3a	4a	5a	6a	7a	8a	9a	10a	11a	MT	1p	2p	3p	4p	5p	6p	7p	8p	9p	10p	11p	MN	Mittel
1	**79.5**	79.6	79.8	79.6	79.8	79.5	79.8	79.9	80.7	80.6	81.5	81.8	82.2	83.1	83.4	83.9	84.3	84.8	85.1	85.5	85.8	86.0	86.2	**86.4**	82.45
2	86.7	86.8	87.1	87.2	87.2	87.4	87.5	87.6	**87.8**	87.6	87.4	87.1	86.7	86.6	85.8	85.5	84.7	84.4	84.0	83.9	83.5	82.7	82.6	**81.6**	85.81
3	**81.0**	80.0	78.8	78.3	78.4	78.0	77.8	77.5	77.5	77.6	77.9	78.2	78.2	78.0	77.9	77.6	77.5	77.8	77.0	77.1	76.8	**76.4**	76.8	77.4	77.90
4	**77.9**	77.8	77.1	77.0	76.4	75.9	75.8	**75.6**	75.8	75.9	75.9	75.9	75.9	75.9	76.0	76.0	76.0	75.9	75.9	75.9	76.0	76.2	76.3	76.3	76.22
5	**76.0**	75.9	75.8	75.4	75.0	74.7	74.3	73.6	73.5	73.4	72.6	71.2	68.7	66.8	66.2	65.1	63.5	63.6	63.4	63.1	63.1	63.0	62.4	**62.0**	69.26
6	61.6	60.8	61.1	**60.6**	61.1	60.8	60.6	61.1	61.4	61.4	61.6	62.6	63.1	63.8	64.3	65.5	66.0	66.8	67.6	68.6	69.6	70.3	71.1	**71.6**	64.29
7	**72.3**	72.4	73.0	73.5	74.4	75.0	76.0	76.6	77.2	77.5	78.4	78.8	79.0	79.9	81.1	81.2	81.8	81.4	81.2	82.0	81.6	83.0	83.1	**83.4**	78.49
8	83.4	84.4	84.6	84.7	**85.1**	84.7	84.3	83.6	83.4	83.5	83.2	84.2	83.2	81.8	80.4	80.3	77.2	79.8	77.4	76.6	75.4	73.6	75.1	**73.4**	80.97
9	**72.6**	71.4	70.8	71.0	71.6	71.8	71.9	70.0	70.3	70.7	**68.6**	70.0	70.6	71.0	71.0	69.4	69.8	71.0	71.1	70.8	70.0	69.5	69.6	70.4	70.62
10	**69.9**	70.4	70.7	71.0	71.1	71.0	71.0	71.4	71.6	71.8	72.3	72.6	72.7	73.9	73.9	74.6	75.0	76.3	76.7	77.2	77.4	77.6	**77.9**	77.8	73.58
11	**77.6**	77.4	77.2	76.8	76.2	75.9	75.8	75.9	76.0	75.8	76.2	75.9	75.9	**75.4**	75.5	75.6	75.8	75.8	75.9	76.3	76.3	76.2	75.9	76.6	76.16
12	76.8	77.1	77.1	77.2	77.6	77.4	77.9	78.7	79.1	79.9	80.4	81.2	81.8	**82.2**	82.2	82.2	81.5	80.7	80.7	80.2	79.2	78.0	77.5	**75.5**	79.25
13	74.0	72.8	71.6	70.7	69.4	68.0	67.4	67.9	**67.1**	68.0	68.3	69.6	70.3	72.2	70.6	70.7	72.2	73.4	74.2	74.6	77.2	78.2	78.0	**79.1**	71.90
14	**79.9**	79.9	80.0	81.0	81.1	81.6	83.2	84.3	85.6	85.5	86.6	87.8	88.7	89.8	91.2	92.8	93.9	94.3	95.8	96.2	97.2	98.7	**99.4**	99.0	88.90
15	**99.0**	00.2	01.1	01.1	01.2	01.5	01.5	01.6	01.8	01.9	02.0	01.9	01.9	01.9	01.9	**02.0**	01.9	01.1	00.6	00.6	00.6	00.6	00.3	99.9	01.17
16	99.4	99.0	98.8	98.7	98.4	98.0	98.0	**97.9**	98.0	98.6	99.0	99.2	99.4	99.5	99.5	99.5	99.9	00.2	00.4	00.4	00.4	00.4	00.7	**00.8**	99.34
17	01.0	01.1	01.4	01.6	01.6	01.6	01.8	01.5	01.8	02.0	02.3	**02.4**	02.4	02.4	02.3	02.2	02.0	01.8	01.6	01.8	01.6	01.4	01.0	**00.6**	01.72
18	00.4	00.3	00.3	99.2	98.8	98.8	98.6	98.4	**98.4**	98.4	98.8	98.8	99.1	99.2	99.2	99.2	99.5	00.2	00.2	00.3	00.6	**00.7**	00.7	00.7	99.53
19	00.8	01.1	**01.2**	01.1	01.0	01.0	01.0	01.1	01.1	00.8	00.8	00.6	00.3	00.2	00.2	00.0	99.9	99.6	99.1	99.0	98.8	98.6	**98.4**	98.4	00.17
20	98.4	98.4	98.3	98.0	**97.9**	97.9	98.0	98.2	98.3	98.4	98.4	98.4	98.4	98.4	98.7	98.8	99.0	99.1	99.6	00.0	00.2	00.2	00.4	**00.6**	98.83
21	00.8	01.0	01.2	**01.2**	01.2	01.2	01.1	01.1	01.1	01.1	01.0	00.8	00.7	00.6	00.2	99.9	99.8	99.4	99.0	98.7	98.4	98.4	98.4	**98.3**	00.19
22	97.6	**97.4**	97.4	97.4	97.4	97.5	97.9	98.7	98.8	99.1	99.9	00.2	00.6	01.0	01.2	01.5	01.9	02.2	02.7	03.0	03.0	03.0	**03.1**	03.1	00.23
23	01.9	02.0	**01.8**	01.9	02.2	03.0	03.5	03.8	04.0	04.2	04.3	04.3	04.4	04.3	04.2	04.2	04.2	04.2	04.4	04.6	04.6	04.7	04.8	**05.8**	03.80
24	**06.2**	06.3	06.7	07.4	07.6	08.7	09.4	10.0	11.1	11.6	12.4	13.0	13.4	13.8	13.9	14.0	14.2	14.3	14.4	14.4	14.6	14.7	**14.8**	14.8	11.74
25	14.8	14.7	14.8	14.8	15.0	15.1	15.1	15.4	15.8	16.0	**16.4**	16.3	16.3	16.3	16.3	16.2	15.9	15.8	15.8	15.1	15.0	14.8	14.3	**13.8**	15.41
26	**13.4**	13.2	12.7	12.4	12.2	11.9	11.9	11.9	11.9	11.9	11.9	11.8	11.6	11.4	11.2	11.1	10.8	10.8	10.6	10.6	10.6	10.6	10.6	**10.6**	11.57
27	**10.4**	10.2	09.9	09.6	09.4	09.4	09.5	09.5	09.5	09.5	09.4	09.4	09.4	09.5	09.5	09.2	09.2	09.2	09.2	09.1	09.1	**08.7**	09.1	09.4	09.44
28	**09.4**	09.4	09.2	08.8	08.7	08.7	08.8	08.7	08.7	09.0	09.2	09.1	09.0	08.7	08.7	08.6	08.4	08.4	08.4	08.3	08.3	08.4	08.3	**08.2**	08.72
M.	90.10	90.04	89.98	89.90	89.89	**89.86**	89.98	90.05	90.26	90.42	90.60	90.82	90.85	90.99	90.95	90.96	90.92	91.15	91.14	91.21	91.25	91.24	**91.31**	91.27	90.63

$H = 904$ m, $H_b = 892.8$ m
$C_g = 1.65$ mb bei 915 mb

$\varphi = 69^0\ 56'$ N
$\lambda = 22^0\ 56'$ E

März.

Datum	1a	2a	3a	4a	5a	6a	7a	8a	9a	10a	11a	MT	1p	2p	3p	4p	5p	6p	7p	8p	9p	10p	11p	MN	Mittel
	800 oder 900 mb +																								
1	07.9	07.6	07.5	07.4	07.0	06.8	07.0	07.0	06.4	06.4	05.8	05.8	05.1	04.8	04.6	04.3	04.3	04.4	03.8	04.4	04.4	03.8	04.2	04.2	05.62
2	04.2	04.0	03.9	03.9	03.8	03.9	04.1	04.0	03.9	03.8	03.9	03.8	03.5	03.4	03.4	03.4	03.5	03.6	03.9	04.0	03.9	03.9	04.0	04.0	03.82
3	04.0	04.0	03.9	03.9	04.2	04.2	03.9	04.2	04.4	04.6	04.6	03.5	03.1	02.7	02.3	01.8	00.4	00.2	99.2	98.8	97.9	96.6	96.0	95.0	01.81
4	93.6	92.2	91.9	91.0	90.0	89.2	89.0	88.4	88.4	88.4	88.3	87.4	87.6	87.1	87.4	87.5	87.5	87.4	87.4	87.1	87.0	87.0	87.2	87.2	88.55
5	87.2	87.1	87.1	87.1	87.1	87.1	87.1	87.1	87.0	86.7	85.8	85.6	84.7	83.5	83.4	83.4	83.2	83.4	83.4	83.2	83.2	83.5	83.8	84.0	85.20
6	84.6	84.7	84.7	85.0	85.0	85.1	85.2	85.5	85.8	85.9	85.9	85.9	85.9	85.8	85.6	85.6	85.5	85.2	85.1	85.1	85.1	85.0	84.7	84.7	85.28
7	84.7	84.6	84.3	84.2	83.5	83.4	83.4	83.5	83.5	83.5	83.6	84.2	84.4	84.6	84.6	84.7	84.7	84.8	84.8	85.9	86.0	86.3	87.2	87.6	84.67
8	88.0	89.0	89.4	90.0	90.6	90.7	91.5	91.6	91.9	92.4	93.0	93.1	93.2	93.6	93.8	94.0	94.4	94.6	94.6	94.8	95.0	95.2	95.6	95.9	92.75
9	96.0	96.0	96.2	96.3	97.2	97.6	97.8	98.0	98.4	98.7	99.0	99.4	99.5	99.0	00.0	00.3	00.8	01.2	01.5	01.9	02.3	02.4	02.8	03.2	99.43
10	03.9	04.0	04.3	05.0	05.2	05.6	06.2	06.8	07.0	07.6	07.9	08.2	08.7	09.0	09.2	09.6	10.2	10.4	10.7	10.7	11.2	11.5	11.6	11.6	08.17
11	11.6	12.2	12.7	13.1	13.1	13.5	14.2	14.4	14.4	15.2	15.5	16.0	16.8	17.0	17.2	17.6	18.2	18.3	18.6	18.6	18.6	18.7	19.4	19.8	16.03
12	19.9	20.3	20.6	20.7	20.7	20.7	20.8	21.1	21.2	21.4	21.4	21.4	21.5	21.5	21.6	21.6	21.6	21.8	21.8	21.8	21.8	21.6	21.6	21.4	21.24
13	21.1	21.0	20.7	20.2	19.4	19.2	18.6	17.6	17.2	16.2	15.9	15.1	13.8	12.7	11.5	11.2	11.0	10.2	09.8	09.2	09.1	09.1	09.0	08.7	14.48
14	08.4	08.0	07.9	07.6	07.0	06.7	06.8	07.5	07.6	07.8	07.9	08.4	08.7	09.1	09.2	09.4	09.9	10.4	11.1	11.2	11.9	12.3	12.6	12.8	09.18
15	13.1	13.4	13.5	13.9	13.9	14.2	14.7	15.0	15.2	15.6	15.9	16.4	16.7	16.8	17.1	17.2	17.4	17.6	17.6	17.6	17.8	17.9	17.9	17.8	16.01
16	17.6	17.6	17.6	17.6	17.5	17.1	16.8	16.6	16.0	15.2	14.6	14.2	13.1	12.8	11.9	11.0	09.8	08.8	07.5	07.0	05.6	05.0	03.9	03.5	12.44
17	02.7	01.5	01.4	01.2	01.1	01.0	01.0	01.0	00.8	00.8	00.8	01.0	01.1	01.2	01.5	01.6	01.8	01.9	01.9	01.9	01.4	01.0	00.7	00.6	01.29
18	00.4	99.9	98.6	97.9	96.2	93.6	91.4	91.0	91.8	91.9	91.6	91.8	91.4	91.1	90.4	90.3	90.4	89.4	89.1	88.2	88.3	86.4	87.6	87.8	91.94
19	86.6	86.3	86.4	85.8	85.8	85.6	86.2	86.4	85.8	85.4	85.2	85.2	85.0	84.8	84.7	83.9	83.6	83.5	83.4	82.7	82.4	82.2	81.8	81.6	84.60
20	81.5	81.4	81.2	81.2	81.1	81.1	81.2	81.2	81.5	82.2	82.6	82.7	83.1	83.5	84.0	84.3	85.2	85.5	85.9	86.2	86.6	87.0	87.5	88.2	83.58
21	88.3	88.4	88.7	89.0	89.2	89.4	89.5	89.6	89.0	90.2	91.1	91.6	92.3	92.6	92.7	92.7	93.0	93.1	93.5	93.6	93.9	94.2	94.3	94.6	91.44
22	94.8	95.0	95.0	95.2	95.4	95.9	95.9	96.2	96.4	96.7	97.0	97.1	97.1	97.1	97.2	97.4	97.5	97.5	97.4	97.4	97.2	97.0	96.7	96.4	96.52
23	96.2	96.2	96.2	96.2	96.2	96.2	96.3	96.7	97.2	97.4	97.6	97.9	98.7	99.0	99.1	99.1	99.1	99.2	99.6	99.8	99.8	99.8	99.9	00.0	98.06
24	00.0	99.9	99.8	99.6	99.5	99.4	99.6	99.8	99.8	99.9	00.0	00.0	00.2	00.2	00.2	00.3	00.3	00.4	00.8	01.1	01.2	01.2	01.4	01.5	00.25
25	01.5	01.6	01.8	01.8	01.8	01.8	01.9	01.9	01.9	02.0	02.2	02.3	02.3	02.4	02.6	02.8	03.1	03.2	03.5	03.6	04.0	04.3	04.6	04.8	02.65
26	04.8	05.0	05.1	05.4	05.6	05.8	06.2	06.4	06.7	07.0	07.2	07.4	07.8	08.3	08.4	08.7	09.0	09.1	09.4	09.4	09.5	09.6	09.9	10.0	07.57
27	10.0	09.9	09.9	09.6	09.6	09.5	09.4	09.2	09.1	09.1	09.0	08.7	08.2	07.8	07.6	07.4	07.2	06.6	05.8	05.4	05.2	05.0	05.1	04.8	07.88
28	03.9	04.8	04.7	05.1	05.0	05.0	03.8	03.9	04.6	05.0	05.2	05.1	05.0	05.0	04.7	04.2	04.2	04.2	04.6	04.4	04.6	04.7	04.2	04.0	04.58
29	04.0	03.9	03.9	02.8	02.7	02.6	03.1	03.4	03.1	03.0	02.7	03.1	02.4	01.8	00.7	01.0	01.2	01.5	00.7	00.3	99.9	99.2	99.0	98.4	01.85
30	97.9	97.1	96.4	95.4	93.8	93.1	91.8	90.8	89.5	88.6	87.1	86.3	85.6	84.7	84.3	83.5	83.0	81.9	81.1	80.7	79.4	78.4	77.1	77.0	86.85
31	76.0	75.4	75.1	74.4	74.3	73.6	73.0	72.7	72.0	71.6	71.1	71.0	71.2	71.1	71.8	72.7	73.1	73.8	74.3	74.6	74.8	76.0	76.0	76.4	73.58
M.	99.82	99.74	99.69	99.60	99.44	99.31	99.27	99.31	99.27	99.36	99.34	99.34	99.28	99.18	99.12	99.11	99.16	99.13	99.09	99.05	99.00	98.90	98.95	98.95	99.27

April.

Datum	1a	2a	3a	4a	5a	6a	7a	8a	9a	10a	11a	MT	1p	2p	3p	4p	5p	6p	7p	8p	9p	10p	11p	MN	Mittel
1	77.0	78.2	79.5	80.2	80.8	82.3	82.6	83.5	83.8	84.2	84.7	85.0	85.0	85.5	85.9	85.9	86.3	86.6	86.7	86.7	86.8	87.0	86.8	86.6	84.07
2	86.8	87.4	87.4	87.4	87.5	87.6	87.8	88.2	88.4	88.4	88.6	89.1	89.6	90.0	90.2	90.6	90.4	90.0	89.6	89.5	88.6	87.8	86.0	85.8	88.45
3	84.6	84.6	84.3	83.1	83.2	83.2	83.4	83.6	84.2	84.2	84.3	84.4	84.4	84.4	84.4	84.3	84.2	84.0	83.8	83.5	83.4	83.4	83.4	83.2	83.90
4	83.2	83.2	83.2	83.0	83.6	84.7	85.9	87.6	88.6	89.8	92.0	93.6	95.8	98.0	99.0	99.8	00.6	01.1	01.6	01.9	02.3	02.7	03.0	02.8	93.62
5	02.0	01.1	00.2	99.4	97.4	95.9	94.3	92.8	89.2	86.3	85.6	85.2	85.1	85.5	84.8	85.0	83.4	82.4	82.4	80.8	85.0	91.6	93.0	96.8	90.22
6	99.5	01.1	02.3	03.9	05.1	05.6	06.6	07.0	07.1	07.2	07.2	07.4	06.8	06.3	05.4	05.1	04.7	04.4	03.2	02.6	01.6	01.1	99.9	99.0	04.17
7	99.0	98.7	98.6	98.6	97.5	97.6	97.6	97.5	96.6	97.5	97.4	98.0	00.6	01.0	01.8	02.4	03.0	02.8	03.0	03.1	03.8	04.0	04.4	04.4	00.37
8	05.2	05.6	05.8	05.9	06.3	06.7	07.1	07.2	07.4	07.2	07.5	07.2	07.0	06.2	05.8	05.2	04.3	04.4	04.2	03.1	01.9	01.6	01.2	01.1	05.21
9	01.1	00.4	00.2	99.2	99.0	98.7	98.8	99.4	99.5	98.8	98.0	97.2	98.6	98.6	99.6	01.1	01.1	01.5	02.6	03.8	03.8	03.9	03.9	03.9	00.53
10	04.3	05.2	05.5	06.2	07.0	08.3	09.4	10.2	11.4	12.4	13.2	13.8	15.0	15.4	15.8	16.4	17.0	17.4	17.6	18.0	17.9	17.8	17.6	17.5	12.93
11	17.4	17.0	16.7	16.6	16.6	16.3	16.2	15.5	15.2	15.0	13.8	13.2	12.0	11.8	11.2	11.4	11.4	11.9	11.9	11.9	11.8	11.4	10.8	10.3	13.64
12	09.4	08.6	08.0	08.0	07.2	06.6	06.4	05.9	06.0	05.9	05.8	06.0	06.3	06.6	06.0	06.0	05.8	05.9	05.8	05.5	05.8	05.8	05.9	06.0	06.47
13	05.9	05.9	06.0	06.2	06.2	06.3	06.3	06.4	06.8	06.7	06.7	06.4	06.3	06.2	06.0	05.9	05.8	05.6	05.5	05.5	05.5	05.4	05.4	05.2	06.00
14	05.2	05.2	05.1	05.0	05.1	05.2	05.2	05.4	05.5	05.5	05.5	05.5	05.5	05.5	05.6	05.5	05.5	05.2	05.0	04.8	04.7	04.3	04.0	03.8	05.12
15	03.2	03.0	02.8	02.6	02.6	02.4	02.2	01.4	99.4	99.0	98.7	98.6	98.8	98.8	98.3	97.8	97.1	96.0	96.6	97.1	97.2	97.2	97.2	97.1	99.38
16	96.7	96.2	94.7	94.3	93.8	93.2	92.4	91.6	91.1	89.6	91.1	90.6	91.0	91.0	91.0	90.7	90.7	90.6	90.3	90.2	90.3	90.8	91.0	90.6	91.81
17	90.2	89.6	89.2	89.1	88.4	88.3	88.3	88.3	88.8	89.1	89.4	89.5	89.6	89.6	89.6	89.6	89.6	89.6	89.6	89.6	89.6	89.5	89.2	89.0	89.26
18	88.8	88.7	88.3	88.2	87.9	87.6	87.5	87.5	87.6	87.6	87.8	87.8	88.0	88.3	88.8	89.0	89.0	89.1	89.2	89.8	90.0	90.3	90.4	90.4	88.65
19	90.8	91.6	92.2	92.7	93.1	93.2	93.8	94.4	95.2	95.6	96.2	97.1	97.6	97.8	98.0	98.3	98.7	99.0	99.5	99.9	00.0	00.6	01.0	01.1	96.56
20	01.2	01.4	01.4	01.5	01.6	01.9	02.2	02.4	02.6	02.8	03.1	03.1	03.0	03.0	02.8	02.7	02.4	02.2	01.9	01.9	01.8	01.0	00.7	00.7	02.05
21	00.0	99.6	99.5	99.5	99.5	99.5	99.6	99.6	99.9	00.3	00.3	00.4	00.6	00.7	01.0	01.1	01.2	01.2	01.8	01.9	02.3	02.4	02.6	02.7	00.72
22	02.7	02.8	03.0	03.2	03.4	03.8	03.9	04.2	04.4	04.6	04.4	04.2	04.0	03.9	03.9	03.8	03.8	03.5	03.2	03.0	02.7	02.2	02.0	01.9	03.44
23	01.5	01.2	01.1	01.0	00.8	00.6	00.3	00.3	01.0	01.2	00.8	00.8	00.8	00.7	00.6	00.7	00.8	00.8	00.8	01.0	00.8	01.0	99.9	00.4	00.79
24	00.7	00.6	00.8	00.8	00.8	00.4	00.3	00.0	00.2	00.0	99.5	99.4	99.1	98.7	98.2	98.3	98.2	97.2	96.8	96.3	95.6	95.2	94.6	94.2	98.58
25	93.4	92.6	92.2	91.0	91.0	90.2	89.5	89.1	88.7	88.4	88.0	87.8	87.8	87.6	87.4	87.4	87.2	87.0	86.7	86.7	86.7	86.7	86.3	86.3	88.57
26	86.4	86.4	86.4	86.6	86.7	87.2	87.6	88.3	88.7	89.0	89.2	90.0	91.1	92.3	92.6	93.5	93.8	94.8	95.4	95.9	96.6	97.0	97.5	97.9	91.29
27	99.0	99.5	00.0	00.7	01.1	01.8	02.2	03.0	03.5	04.0	04.3	05.0	05.4	05.9	05.9	06.0	06.2	06.4	06.8	07.0	07.0	07.0	07.0	07.0	04.24
28	07.0	06.8	06.8	06.7	06.6	06.6	06.7	06.8	06.8	07.0	07.0	07.1	07.4	07.6	07.8	07.8	07.6	07.6	08.0	08.2	08.6	08.7	08.8	09.2	07.47
29	09.5	09.8	10.0	10.4	11.0	11.4	11.8	12.8	13.4	13.9	14.3	15.0	15.4	15.9	16.2	16.6	16.7	16.7	17.0	17.1	17.4	17.5	17.6	17.6	14.38
30	17.6	17.4	17.2	17.2	17.1	16.8	16.6	16.4	16.4	16.4	16.2	16.0	15.8	15.4	15.0	14.7	14.6	14.3	13.8	13.5	13.2	13.1	13.0	12.2	15.41
M.	98.98	98.98	98.95	98.94	98.93	99.00	99.08	99.21	99.25	99.25	99.35	99.48	99.78	99.94	99.95	00.09	00.04	99.97	00.01	99.99	00.09	00.27	00.14	00.16	99.58

$H = 904$ m, $H_b = 892.8$ m — $\varphi = 69^0\ 56'$ N

$C_y = 1.65$ mb bei 915 mb — $\lambda = 22^0\ 56'$ E

Mai.

Datum	1a	2a	3a	4a	5a	6a	7a	8a	9a	10a	11a	MT	1p	2p	3p	4p	5p	6p	7p	8p	9p	10p	11p	MN	Mittel
												800 oder 900 mb +													
1	**11.5**	11.1	10.4	09.9	09.2	08.6	08.6	08.2	07.9	07.6	06.3	05.9	05.0	03.0	02.4	02.0	01.9	01.2	00.6	00.2	99.8	99.5	99.0	**98.6**	04.93
2	97.9	97.4	97.0	96.8	96.6	96.2	96.2	**95.9**	95.9	95.9	96.0	95.9	96.0	96.4	96.0	96.8	96.4	96.8	98.2	99.1	99.5	99.4	**99.8**	99.6	97.15
3	**01.6**	01.9	01.9	03.1	04.0	04.3	04.7	05.8	06.4	07.1	08.0	08.7	09.4	09.6	09.9	10.2	10.3	**10.3**	10.3	10.0	09.9	09.2	08.7	07.6	07.20
4	**07.1**	06.8	05.9	05.6	05.1	04.2	03.5	02.7	02.6	02.0	01.9	01.4	00.7	00.6	00.3	00.4	00.3	99.9	99.8	99.8	99.4	98.6	**98.3**	98.4	01.89
5	98.6	98.2	**98.0**	98.6	00.0	01.0	01.4	02.7	03.2	03.9	04.6	05.6	06.3	07.2	07.8	08.2	08.2	08.2	09.0	09.2	09.5	10.7	**10.8**	10.8	05.07
6	11.1	11.2	11.9	12.0	12.2	12.3	12.2	11.9	11.6	11.4	**11.0**	12.0	12.2	12.2	12.2	**12.3**	12.0	11.9	11.5	11.4	11.8	11.8	11.8	11.6	11.81
7	**12.0**	12.3	12.6	12.6	12.6	12.7	12.7	12.7	12.7	13.0	13.0	13.2	13.5	**13.8**	13.8	13.6	13.6	13.5	13.2	13.0	12.7	12.6	12.2	12.0	12.90
8	**11.6**	11.2	10.7	10.3	09.9	09.2	08.8	08.4	08.4	**08.4**	08.4	08.4	08.4	08.6	08.7	08.8	08.8	09.0	09.1	09.1	09.2	09.2	09.2	09.1	09.20
9	**09.1**	09.0	08.7	08.4	08.0	07.5	07.4	07.2	07.1	06.8	06.6	06.2	05.5	05.6	05.5	04.3	04.0	**03.9**	04.3	04.6	04.6	04.6	04.2	03.9	06.12
10	03.5	03.4	03.1	02.7	02.3	01.9	**01.8**	02.3	02.6	03.1	03.5	04.0	04.6	05.5	05.5	05.6	**05.6**	05.6	05.5	05.4	05.4	05.5	05.5	05.6	04.15
11	**05.8**	05.9	06.0	06.2	06.3	06.6	07.0	07.4	07.8	08.3	08.7	09.1	09.5	09.9	10.2	**10.3**	10.3	10.2	10.0	10.2	10.0	10.0	09.8	09.1	08.52
12	**09.0**	08.8	08.7	08.4	07.9	07.6	07.4	07.2	06.6	06.4	06.0	05.9	05.6	05.5	05.0	04.7	04.6	04.2	03.9	**03.6**	03.8	03.8	03.6	03.6	05.91
13	03.5	03.5	03.5	**03.4**	03.5	03.8	03.9	04.0	04.3	04.4	04.7	05.0	05.1	05.2	05.4	05.5	05.5	05.5	05.5	**05.6**	05.5	05.5	05.4	05.2	04.68
14	05.1	05.0	**05.0**	05.0	05.0	05.1	05.2	05.4	05.8	05.9	06.2	06.3	06.6	07.0	07.1	07.2	07.2	07.4	07.6	**07.8**	07.8	07.6	07.5	07.6	06.39
15	**07.9**	08.2	08.0	08.3	08.6	08.6	08.7	09.1	09.1	09.2	09.4	09.6	09.6	09.8	09.8	**09.8**	09.8	09.6	09.6	09.6	09.8	09.8	09.8	09.8	09.23
16	**09.8**	09.9	09.9	10.0	10.0	10.2	10.3	10.4	10.6	11.2	11.2	11.4	11.5	11.6	11.6	11.9	12.2	12.4	12.6	12.7	13.0	13.0	13.5	**13.8**	11.45
17	14.0	14.2	14.3	14.4	15.0	15.2	15.2	15.2	**15.4**	15.2	15.2	14.8	14.7	14.4	14.3	14.2	13.9	13.6	13.5	13.1	12.6	12.4	12.2	**11.4**	14.10
18	**10.6**	10.0	09.4	09.0	07.8	07.2	05.9	05.5	05.5	05.5	06.0	06.0	05.8	05.8	05.4	04.7	03.5	03.1	02.7	01.2	**01.0**	01.8	03.9	03.2	05.44
19	**02.7**	04.3	04.7	05.5	06.2	07.1	07.9	08.0	08.0	08.4	08.8	09.1	09.2	**09.6**	09.5	08.8	09.0	08.6	09.0	09.0	08.7	08.6	08.6	08.4	07.82
20	**08.3**	07.9	07.8	07.5	07.2	07.1	07.0	07.0	06.7	06.7	06.7	06.6	06.3	06.0	06.0	**06.0**	06.0	06.0	06.2	06.4	06.4	06.6	06.8	06.8	06.75
21	**06.8**	06.6	06.4	06.4	06.2	06.2	06.2	06.0	05.9	05.8	05.8	05.5	05.4	05.2	05.1	04.8	04.7	04.4	04.3	04.3	04.2	**04.2**	04.2	04.2	05.37
22	04.2	04.0	03.9	**03.9**	03.9	04.0	04.0	04.3	04.4	04.6	04.7	04.8	04.8	04.8	04.8	04.8	04.8	05.0	05.1	05.1	05.2	05.4	**05.6**	05.5	04.65
23	05.5	05.6	05.5	**05.5**	05.5	05.6	05.6	05.8	05.9	**06.0**	05.9	05.8	05.8	05.9	05.8	05.8	05.8	05.8	05.8	05.6	05.6	05.8	05.8	05.8	05.73
24	05.6	05.6	05.6	05.6	05.6	05.6	05.6	05.6	05.6	05.6	05.6	05.8	**05.8**	05.8	05.6	05.6	05.6	05.6	05.6	05.5	05.4	05.2	04.8	**04.6**	05.52
25	04.3	04.3	04.3	04.0	03.8	03.6	03.6	03.6	03.5	03.2	**03.1**	03.4	03.6	03.8	03.6	03.4	04.0	04.2	04.3	04.4	04.4	04.4	04.4	**04.6**	03.91
26	**04.6**	04.7	04.8	05.1	05.4	05.5	05.8	05.9	06.0	06.3	06.6	07.0	07.1	07.2	07.4	07.5	07.5	07.5	07.5	07.6	07.8	07.9	08.0	**08.2**	06.62
27	**08.4**	08.6	08.7	08.8	09.1	09.2	09.4	09.5	09.5	09.5	**09.6**	09.5	09.5	09.5	09.5	09.5	09.4	09.1	08.8	08.8	08.8	08.7	08.7	08.6	09.11
28	**08.3**	08.2	07.9	07.2	06.8	06.6	06.4	06.4	06.3	05.4	**04.8**	05.1	06.2	06.0	06.3	06.3	06.3	06.6	06.3	06.4	06.3	05.4	05.1	05.0	06.32
29	05.5	04.8	04.3	04.8	05.2	04.3	04.2	**04.2**	04.3	05.0	05.1	05.9	06.2	06.3	06.4	06.7	06.8	07.2	07.4	07.5	07.6	07.9	08.2	**08.3**	06.00
30	**08.2**	07.9	07.6	07.5	07.2	07.1	06.8	06.6	06.2	05.9	05.5	05.2	05.1	05.0	04.8	04.3	04.2	04.0	03.8	03.6	03.5	03.5	**03.1**	03.1	05.40
31	**03.0**	02.3	02.2	01.9	01.6	01.5	01.2	00.8	00.7	00.4	00.4	00.3	00.3	00.0	00.0	00.2	00.0	99.8	99.4	99.5	99.5	99.2	99.0	**98.8**	00.50
M.	06.62	06.54	06.41	06.40	06.38	06.31	06.28	06.31	06.34	06.39	06.43	06.56	06.62	**06.67**	06.64	06.59	06.52	06.45	06.46	06.43	06.41	06.38	06.37	**06.22**	06.45

Juni.

Datum	1a	2a	3a	4a	5a	6a	7a	8a	9a	10a	11a	MT	1p	2p	3p	4p	5p	6p	7p	8p	9p	10p	11p	MN	Mittel
1	98.8	98.8	98.8	98.8	**98.7**	98.7	98.7	98.8	99.0	99.1	99.4	99.6	00.2	00.8	01.1	01.6	01.8	02.0	02.3	02.6	02.8	03.4	03.4	**03.8**	00.54
2	**03.9**	04.0	04.6	04.7	05.0	05.2	05.6	05.8	06.2	06.4	06.6	07.4	07.5	07.6	07.9	08.0	08.2	08.3	08.3	08.3	08.4	08.6	**08.6**	08.6	06.82
3	**08.6**	08.7	08.7	08.8	08.8	09.0	09.1	09.2	09.4	09.5	09.6	09.8	09.8	09.9	09.9	09.9	09.9	09.9	09.9	09.9	10.0	10.0	10.0	**10.2**	09.52
4	**10.3**	10.4	10.7	10.8	10.8	11.0	11.5	11.9	12.0	12.3	12.7	12.8	13.0	13.1	13.2	13.2	13.4	13.4	13.6	13.6	13.5	13.6	13.9	**14.2**	12.45
5	**14.4**	14.7	15.0	15.0	15.1	15.2	15.4	15.6	15.9	16.2	16.3	16.4	16.7	17.1	17.1	17.1	17.1	**17.1**	17.1	17.1	17.1	17.1	17.0	16.6	16.22
6	**16.4**	16.2	16.2	15.9	15.8	15.6	15.5	15.2	15.1	15.0	15.0	14.8	14.8	14.8	14.8	14.7	14.4	14.3	14.2	14.0	13.8	13.5	13.4	**13.1**	14.85
7	**13.0**	12.7	12.4	12.2	11.9	11.6	11.2	10.8	10.6	10.6	10.3	10.0	09.8	09.5	09.5	09.5	09.5	09.5	09.5	**09.4**	09.5	09.8	10.0	11.0	10.58
8	11.8	**11.5**	12.0	12.2	12.7	13.2	13.5	13.9	14.0	14.6	14.8	15.2	15.4	15.8	15.9	**15.9**	15.8	15.6	15.1	15.0	14.3	13.9	13.6	13.4	14.13
9	12.8	12.6	12.3	11.9	11.6	11.4	10.4	10.3	**10.3**	10.3	10.6	10.7	11.2	11.0	11.8	12.0	11.9	11.2	12.3	12.4	12.7	**13.0**	12.7	12.6	11.67
10	12.7	12.7	13.2	13.1	13.4	13.6	13.8	13.9	14.6	14.8	15.1	15.5	15.6	**15.6**	15.6	15.5	15.4	15.1	15.1	14.7	14.3	13.6	13.0	**11.8**	14.24
11	**11.2**	10.0	08.6	08.0	07.8	07.5	07.1	06.3	05.9	05.6	05.2	04.7	04.3	04.4	03.9	03.9	03.4	03.0	02.2	01.6	01.4	01.1	00.6	**99.9**	04.90
12	**99.2**	98.4	98.2	97.5	97.4	97.1	96.8	**96.8**	96.8	97.0	97.0	97.0	97.0	97.1	97.2	97.2	97.4	97.5	97.6	97.6	97.6	97.6	97.5	97.4	97.41
13	**97.4**	97.2	97.2	97.2	97.2	97.0	96.7	96.6	96.4	96.3	95.9	95.8	95.4	94.8	94.4	94.2	93.5	92.8	92.8	92.4	92.6	92.6	92.3	**92.0**	95.03
14	92.0	92.0	91.9	91.9	91.8	**91.8**	91.8	91.9	91.9	92.3	92.6	93.0	93.4	93.5	93.5	93.9	94.0	94.2	94.6	94.8	95.1	95.2	95.5	**95.6**	93.26
15	95.9	96.3	96.3	96.4	96.6	96.7	96.8	97.0	97.0	97.0	97.0	97.1	97.1	**97.2**	97.2	96.8	97.0	96.6	96.4	96.4	96.2	95.5	94.8	**94.7**	96.50
16	**94.4**	93.5	93.2	92.6	92.3	92.0	**92.0**	92.0	92.2	92.3	92.3	92.3	92.3	92.3	92.3	92.3	92.2	92.2	92.2	92.3	92.4	92.4	92.4	92.6	92.46
17	**92.6**	92.6	92.7	92.8	93.0	93.2	93.5	93.9	94.0	94.6	94.7	95.1	95.6	96.2	96.4	96.6	97.0	97.5	97.9	98.2	98.6	98.7	99.1	**99.2**	95.57
18	**99.4**	99.5	99.8	99.9	00.2	00.4	00.6	01.0	01.2	01.4	01.6	01.9	02.2	02.4	02.7	02.8	03.0	03.0	03.1	03.1	03.2	03.2	03.4	**03.5**	01.77
19	03.6	03.5	**03.4**	03.4	03.5	03.6	03.8	03.9	03.9	03.9	03.9	04.0	04.0	04.2	04.2	04.2	04.2	04.2	04.2	04.4	04.4	04.7	04.8	**04.8**	04.03
20	**04.8**	04.8	05.0	05.1	05.1	05.2	05.5	05.6	05.8	06.2	06.2	06.4	06.7	06.8	06.8	07.1	07.2	07.4	07.8	07.9	08.0	08.2	08.2	**08.2**	06.50
21	**08.3**	08.4	08.4	08.6	08.6	08.6	08.7	08.8	09.2	09.4	09.5	09.6	09.8	09.8	09.8	09.9	09.9	10.0	10.0	10.0	10.3	10.3	10.4	**10.4**	09.45
22	10.4	10.4	10.4	10.4	10.4	**10.3**	10.4	10.4	10.6	10.6	10.7	10.8	11.0	**11.1**	11.1	11.1	11.0	11.0	11.0	11.0	11.0	11.1	11.0	11.0	10.76
23	11.0	**10.8**	10.8	11.0	11.0	11.0	11.1	11.5	11.5	11.5	11.6	11.8	11.8	11.8	11.8	11.9	11.9	11.9	11.9	11.9	**12.0**	11.8	11.8	11.8	11.54
24	**11.6**	11.6	11.4	11.4	11.1	11.0	10.8	10.8	10.8	10.8	10.8	10.7	10.7	10.6	10.3	10.3	10.2	10.0	09.8	09.8	09.5	09.5	08.6	**08.4**	10.44
25	**08.4**	07.4	07.1	06.2	05.6	05.2	04.4	04.4	05.2	04.7	02.4	01.9	00.4	99.5	99.1	98.6	98.3	98.2	97.9	97.8	97.6	97.0	96.8	**96.6**	07.70
26	**96.3**	95.9	95.4	95.1	95.0	94.8	94.6	94.4	94.6	94.6	94.6	94.4	94.4	94.3	94.0	93.9	93.8	93.5	**93.4**	93.6	94.0	93.9	94.2	94.7	94.48
27	**93.9**	94.2	95.2	95.6	95.5	95.8	96.8	98.2	98.6	99.4	99.5	99.8	00.6	01.6	02.0	02.3	02.8	03.1	03.4	03.4	03.8	04.0	04.2	**04.3**	99.92
28	**04.4**	04.8	05.0	05.1	05.4	05.6	06.0	06.6	07.2	07.4	07.6	07.9	08.6	08.8	09.0	09.1	09.4	09.9	10.0	10.2	10.3	10.4	10.4	**10.8**	07.91
29	**11.1**	11.2	11.5	11.6	11.8	12.3	12.4	12.7	13.0	13.4	13.6	14.0	14.7	15.0	15.2	15.6	15.8	15.9	16.0	16.2	16.3	16.4	16.7	**17.0**	14.14
30	**17.2**	17.4	17.5	17.5	17.4	17.5	17.9	17.9	18.0	18.3	18.6	19.0	19.0	19.1	19.1	19.2	19.4	19.4	19.8	19.8	19.8	19.8	19.9	**19.9**	18.68
M.	05.53	05.41	05.43	05.36	**05.35**	05.37	05.41	05.54	05.70	05.85	05.86	05.98	06.10	06.19	06.23	06.28	06.29	06.26	06.31	06.31	**06.35**	06.33	06.27	06.27	05.92

$H = 904$ m, $H_b = 892.8$ m — $\varphi = 69^0\ 56'$ N

$C_g = 1.65$ mb bei 915 mb — **Juli.** — $\lambda = 22^0\ 56'$ E

Datum	1a	2a	3a	4a	5a	6a	7a	8a	9a	10a	11a	MT	1p	2p	3p	4p	5p	6p	7p	8p	9p	10p	11p	MN	Mittel
												800 oder 900 mb +													
1	19.9	19.9	19.9	19.9	19.9	19.9	20.0	20.0	20.2	20.4	20.4	20.6	20.7	20.8	20.8	20.8	20.8	20.8	20.8	20.8	21.0	21.0	21.0	21.0	20.47
2	21.0	21.0	21.0	20.8	20.7	20.7	20.8	21.0	21.1	21.2	21.4	21.4	21.5	21.5	21.5	21.5	21.4	21.4	21.4	21.4	21.4	21.4	21.4	21.4	21.22
3	21.4	21.4	21.4	21.2	21.2	21.2	21.2	21.2	21.2	21.4	21.4	21.4	21.5	21.5	21.5	21.4	21.4	21.2	21.2	21.2	21.2	21.2	21.2	21.2	21.30
4	21.2	21.2	21.1	21.0	20.8	20.8	20.8	20.8	20.8	20.7	20.7	20.7	20.6	20.6	20.6	20.6	20.4	20.3	20.0	19.9	19.8	19.8	19.5	19.4	20.50
5	19.4	19.0	18.4	17.8	17.6	17.5	17.5	17.4	17.2	17.0	16.8	16.7	16.6	16.0	15.5	15.1	14.8	14.2	13.6	13.6	13.5	13.0	12.7	12.4	15.97
6	12.0	12.0	11.8	11.4	11.1	10.8	10.7	10.6	10.6	10.6	10.7	10.6	10.3	10.0	09.9	09.9	09.9	09.8	09.8	09.8	09.8	09.8	09.8	09.6	10.47
7	09.6	09.6	09.6	09.5	09.5	09.2	09.1	09.0	09.0	08.7	08.6	08.3	08.2	07.9	07.6	07.2	07.1	07.1	06.8	06.8	06.8	06.8	07.0	07.0	08.17
8	07.0	07.0	07.0	07.0	07.0	07.1	07.0	07.0	07.1	07.2	07.4	07.5	07.5	07.6	07.6	07.5	07.5	07.4	07.2	07.0	07.0	07.0	06.8	06.8	07.18
9	06.7	06.7	06.2	05.8	05.8	05.8	05.9	05.9	06.2	06.6	06.6	06.8	06.8	06.8	07.1	07.0	06.7	06.6	07.0	06.8	06.7	06.6	06.2	06.2	06.48
10	06.2	06.2	06.2	06.0	05.9	05.8	05.9	06.0	06.0	06.0	06.0	05.8	05.4	05.2	05.0	04.8	04.7	04.6	04.4	04.3	03.8	03.8	03.9	03.6	05.23
11	03.4	03.0	02.6	02.2	02.0	01.9	01.8	01.5	01.1	01.1	01.1	01.2	01.2	01.2	01.9	02.0	02.3	02.8	03.0	03.5	03.9	04.0	04.3	04.4	02.39
12	04.7	05.0	05.4	05.5	05.9	06.4	06.8	07.2	07.8	08.0	08.3	08.6	09.1	09.8	10.4	11.1	11.4	11.9	12.4	12.6	12.4	12.6	12.6	12.6	09.10
13	12.6	12.4	12.4	12.4	12.4	12.6	12.7	12.8	13.1	13.2	13.5	13.8	14.6	15.1	15.1	15.9	15.6	16.3	16.7	16.4	17.4	17.5	17.8	18.0	14.60
14	18.3	18.7	18.8	19.0	19.1	19.2	19.4	19.6	19.8	19.9	20.0	20.0	20.2	20.2	20.2	20.3	20.2	20.0	19.9	19.9	19.9	19.9	19.9	19.9	19.68
15	19.2	18.8	18.8	18.4	18.4	18.2	18.0	17.5	17.5	17.5	17.5	17.5	17.2	17.1	17.0	17.0	16.8	16.7	16.4	16.4	16.3	16.0	15.9	15.8	17.33
16	15.6	15.5	15.6	15.6	15.6	15.4	15.2	15.2	15.1	15.0	15.0	14.7	14.6	14.4	14.3	14.4	14.4	14.6	14.6	14.6	14.6	14.6	14.7	14.7	14.92
17	14.7	14.7	14.7	14.7	14.7	14.8	15.0	15.0	15.1	15.0	14.8	14.7	14.7	14.4	14.2	14.2	14.0	14.0	14.0	13.9	13.8	13.6	13.6	13.2	14.40
18	13.0	12.8	12.6	12.4	12.4	12.3	12.3	12.0	12.0	12.3	12.3	12.3	12.3	12.2	12.3	12.2	12.3	12.4	12.3	12.4	12.3	12.3	12.3	12.0	12.33
19	11.5	11.2	11.0	11.0	10.7	11.0	10.8	11.1	11.2	11.4	11.5	11.6	11.8	11.9	11.9	12.2	12.6	12.7	12.7	12.7	12.8	13.1	13.5	13.6	11.90
20	13.6	13.9	13.9	14.2	14.3	14.4	14.4	14.6	14.7	14.8	15.0	15.0	15.1	15.1	15.1	15.1	15.1	15.1	15.2	15.2	15.2	15.4	15.4	15.4	14.80
21	15.4	15.5	15.6	15.6	15.8	15.8	15.9	15.9	16.6	16.8	16.8	16.7	16.4	16.0	16.0	16.2	16.2	16.6	16.2	16.8	17.0	17.0	17.0	16.7	16.27
22	16.7	16.7	16.7	16.7	16.3	15.6	15.2	14.6	14.2	14.4	14.6	14.3	14.2	14.0	14.0	14.0	13.9	13.8	13.6	13.6	13.8	13.6	13.5	13.4	14.64
23	13.4	12.8	12.7	12.6	12.6	12.4	12.4	12.0	12.0	11.9	11.4	11.1	10.8	10.7	10.0	09.8	09.5	08.0	06.6	05.9	05.8	05.9	05.6	05.5	10.06
24	05.4	04.7	04.8	04.4	04.4	04.3	04.2	03.9	03.6	03.8	03.8	03.6	03.6	02.8	02.3	02.8	03.2	03.2	03.5	04.0	03.4	04.2	03.9	03.8	03.82
25	02.8	03.4	03.6	04.6	05.2	06.3	06.7	07.1	08.2	09.4	10.2	11.0	11.2	12.3	12.3	13.2	13.9	14.4	14.6	14.7	14.8	14.8	15.1	15.1	10.20
26	15.2	15.2	15.1	14.0	13.0	12.7	11.4	11.0	10.2	09.4	08.0	07.5	06.7	06.0	05.0	04.8	04.0	03.8	03.6	03.0	02.8	02.6	02.4	02.2	07.90
27	01.2	00.3	99.9	99.6	99.8	99.4	99.8	00.6	01.0	01.4	02.0	02.6	03.0	03.2	03.2	03.4	03.4	03.6	03.8	03.6	03.5	03.2	02.6	02.0	01.92
28	01.6	01.1	00.8	00.8	00.8	00.8	01.0	01.8	02.0	02.3	02.7	03.0	03.2	03.6	03.8	03.8	03.9	04.2	04.6	04.7	04.8	04.8	04.8	04.8	02.90
29	04.8	04.8	04.7	04.6	04.6	04.6	04.7	05.0	05.0	05.2	05.2	05.9	06.0	06.0	06.0	06.2	06.3	06.4	06.4	06.4	06.4	06.4	06.4	06.4	05.60
30	06.4	06.3	06.0	05.8	05.2	05.0	05.0	04.3	04.2	03.9	03.5	03.4	03.2	03.1	03.0	02.7	02.4	02.3	02.3	02.2	02.0	01.9	01.9	01.6	03.65
31	01.5	01.5	01.5	01.2	01.0	00.8	00.7	00.8	01.0	01.2	01.2	01.2	01.8	01.8	01.9	01.9	01.8	01.6	01.6	01.6	01.6	01.8	01.8	01.8	01.44
M.	11.46	11.36	11.28	11.15	11.09	11.05	11.04	11.05	11.12	11.22	11.24	11.27	11.29	11.25	11.19	11.26	11.22	11.22	11.17	11.15	11.15	11.15	11.11	11.02	11.19

August.

Datum	1a	2a	3a	4a	5a	6a	7a	8a	9a	10a	11a	MT	1p	2p	3p	4p	5p	6p	7p	8p	9p	10p	11p	MN	Mittel
1	01.8	01.8	01.8	01.8	01.8	01.6	01.6	01.8	01.8	01.9	02.0	02.2	02.3	02.4	02.6	02.3	02.3	02.4	02.4	02.6	02.8	03.0	03.0	03.0	02.21
2	03.0	03.1	03.1	03.1	03.2	03.2	03.4	03.6	03.6	03.6	03.8	03.9	04.2	04.3	04.3	04.4	04.4	04.6	04.8	05.0	05.1	05.4	05.5	05.5	04.09
3	05.5	05.5	05.5	05.4	05.4	05.4	05.4	05.4	05.2	05.2	05.1	05.2	05.2	05.1	04.8	04.8	04.7	04.8	04.8	04.8	04.8	04.8	04.8	04.8	05.10
4	04.8	04.7	04.6	04.4	04.2	04.2	04.0	04.2	04.0	04.0	04.0	04.0	04.2	04.2	04.0	04.0	04.0	04.0	04.0	04.2	04.2	04.3	04.3	04.6	04.21
5	04.7	04.7	04.7	04.6	04.4	04.4	04.4	04.4	04.4	04.4	04.4	04.4	04.6	04.6	04.6	04.4	04.2	04.2	04.3	04.2	04.2	04.0	04.0	04.0	04.38
6	04.0	03.9	03.9	03.9	03.9	03.6	03.6	03.6	03.6	03.8	04.0	04.3	04.6	05.0	05.4	05.6	06.0	06.3	06.4	06.4	06.7	06.8	06.8	07.0	04.96
7	07.2	07.4	07.4	07.4	07.2	07.4	07.4	07.5	07.6	07.9	08.4	08.7	09.0	09.1	09.1	09.1	09.2	09.2	09.2	09.2	09.2	09.1	09.1	09.1	08.38
8	09.1	09.1	09.1	09.1	09.0	09.0	09.0	09.0	09.0	09.1	09.4	09.8	09.9	10.0	10.0	10.0	10.0	10.0	10.0	10.0	10.0	10.0	10.0	10.2	09.58
9	10.3	10.4	11.0	11.2	11.4	11.5	11.6	11.9	11.9	12.0	12.3	12.7	13.0	13.2	13.1	13.1	13.1	13.1	13.0	13.0	13.0	12.8	12.2	11.8	12.19
10	11.6	11.5	11.0	10.4	10.3	10.2	10.2	10.2	09.8	09.5	09.0	08.7	08.4	08.2	07.8	07.8	07.4	07.4	06.6	06.4	06.2	06.2	06.0	04.4	08.55
11	03.9	03.2	02.3	02.3	02.2	00.8	00.6	00.8	00.4	00.2	99.8	99.0	98.8	98.7	98.7	98.2	98.0	98.2	98.4	98.4	98.7	98.8	98.8	99.2	99.93
12	99.6	99.8	99.8	99.9	99.9	00.3	00.8	01.1	01.2	01.6	01.8	02.2	02.6	02.7	03.2	03.8	04.2	04.6	04.8	05.0	05.4	05.9	06.2	06.4	02.62
13	06.7	07.1	07.6	07.6	07.4	08.4	09.0	09.2	09.4	09.6	09.6	09.8	09.9	10.0	10.0	09.9	09.6	09.4	09.1	08.7	08.3	08.3	07.9	07.1	08.73
14	06.8	06.6	06.0	05.5	05.2	05.2	05.1	05.0	05.0	05.1	05.2	05.4	05.4	05.5	05.6	06.3	06.4	06.7	07.0	07.0	07.0	07.0	07.0	07.0	06.00
15	07.0	06.8	06.8	06.8	06.8	06.8	06.8	06.8	06.8	07.0	07.1	07.1	07.2	07.2	07.4	07.4	07.5	07.6	07.6	07.6	07.6	07.8	07.9	07.9	07.22
16	07.9	07.9	07.9	07.9	08.0	08.2	08.3	08.6	08.6	08.6	08.6	08.6	08.6	08.2	08.4	08.3	08.0	07.9	07.8	07.6	07.2	07.0	06.7	06.4	07.97
17	06.3	05.8	05.5	05.4	04.8	04.8	04.7	04.7	04.4	04.3	04.2	04.3	04.3	04.3	04.2	04.0	04.0	03.9	03.9	03.9	03.9	03.9	03.9	03.9	04.47
18	03.9	03.9	03.8	03.8	03.8	03.8	03.8	03.9	03.9	04.2	04.3	04.6	04.8	05.0	05.1	05.2	05.2	05.4	05.5	05.6	05.6	05.6	05.6	05.8	04.67
19	05.9	06.0	06.0	06.2	06.2	06.2	06.3	06.3	06.4	06.6	06.6	06.6	06.7	06.7	06.7	06.8	07.0	07.0	07.1	07.2	07.4	07.4	07.6	07.6	06.69
20	07.8	08.0	08.0	08.0	08.2	08.4	08.7	09.2	09.2	09.4	09.4	09.5	09.6	09.9	10.0	10.3	10.3	10.3	10.4	10.4	10.4	10.6	10.6	10.6	09.47
21	10.6	10.3	10.3	10.4	10.3	10.4	10.6	10.7	10.7	10.8	11.0	11.0	11.2	11.5	11.8	11.9	12.0	12.2	12.3	12.3	12.3	12.3	12.3	12.3	11.31
22	12.3	12.4	12.4	12.4	12.4	12.4	12.4	12.4	12.4	12.4	12.7	12.8	12.8	12.8	13.0	13.1	13.1	13.1	13.2	13.4	13.6	13.8	13.9	13.9	12.88
23	14.0	14.0	14.0	14.0	14.2	14.3	14.6	14.8	14.8	15.0	15.1	15.2	15.4	15.6	15.6	15.6	15.6	15.6	15.8	15.6	15.6	15.6	15.6	15.6	15.05
24	15.6	15.6	15.6	15.6	15.6	15.6	15.6	15.6	15.8	15.8	15.6	15.6	15.5	15.5	15.2	15.4	15.4	15.5	15.5	15.5	15.5	15.5	15.5	15.5	15.55
25	15.4	15.2	15.1	15.0	15.0	14.8	14.8	14.8	15.0	15.0	15.0	15.1	15.1	15.1	15.0	14.8	14.8	14.7	14.7	14.7	14.7	14.7	14.8	14.8	14.92
26	14.8	14.8	14.8	14.8	14.8	15.0	15.0	15.1	15.2	15.2	15.5	15.6	15.8	15.9	15.9	15.9	15.9	15.9	15.9	15.9	15.9	15.8	15.8	15.8	15.46
27	15.8	15.8	15.8	15.8	15.8	15.6	15.5	15.1	15.1	15.2	15.2	15.0	15.1	15.1	15.1	15.1	15.1	15.1	15.1	15.0	14.3	14.3	14.0	13.2	15.09
28	12.8	12.8	13.2	13.4	13.2	13.0	13.1	13.4	12.8	12.8	12.7	12.3	12.0	11.5	11.2	10.8	10.3	10.0	09.8	09.4	08.4	08.2	07.9	07.2	11.34
29	07.0	06.6	06.3	06.0	05.6	05.5	05.0	04.8	04.7	04.6	03.8	03.6	03.1	02.8	02.3	02.2	02.0	02.2	01.6	01.5	01.2	01.1	00.3	00.3	03.50
30	00.0	00.0	99.9	99.8	99.6	99.4	99.2	99.1	99.1	99.1	99.1	99.1	99.1	99.1	99.1	99.1	99.1	99.1	99.1	99.1	99.2	99.2	99.2	99.2	99.29
31	99.2	99.2	99.2	99.1	99.0	98.8	98.6	98.1	98.4	97.8	97.2	97.0	96.4	95.8	95.5	94.8	94.2	93.1	92.0	91.6	91.0	90.6	89.5	89.2	95.65
M.	07.59	07.55	07.50	07.45	07.38	07.36	07.39	07.46	07.43	07.47	07.48	07.53	07.57	07.58	07.57	07.56	07.52	07.53	07.49	07.46	07.40	07.41	07.31	07.20	07.47

$H = 904$ m, $H_b = 892.8$ m
$C_g = 1.65$ mb bei 915 mb

$\varphi = 69^0\ 56'$ N
$\lambda = 22^0\ 56'$ E

September.

Datum	1a	2a	3a	4a	5a	6a	7a	8a	9a	10a	11a	MT	1p	2p	3p	4p	5p	6p	7p	8p	9p	10p	11p	MN	Mittel
	800 oder 900 mb +																								
1	89.0	88.3	87.5	86.7	86.5	85.8	85.5	85.1	85.1	85.0	84.7	84.7	84.8	85.0	84.8	84.7	84.8	84.8	85.2	85.4	85.4	85.4	85.4	85.4	85.62
2	85.1	84.8	84.4	84.2	84.0	83.5	83.2	83.0	82.7	82.4	82.2	82.2	81.9	81.9	81.5	81.5	81.5	81.4	80.6	80.4	79.8	79.2	79.2	79.4	82.08
3	79.6	79.9	80.3	80.3	80.4	80.6	80.6	80.8	81.6	82.0	82.7	83.4	83.8	84.2	84.6	85.2	85.9	86.2	86.8	87.0	87.1	87.5	87.8	88.4	83.60
4	88.7	88.8	89.2	89.5	90.0	90.3	90.7	91.2	91.5	91.6	91.9	92.6	92.8	93.0	93.2	93.2	93.4	93.8	93.8	93.9	94.0	94.0	93.9	93.9	92.04
5	93.5	93.1	92.6	92.3	92.0	91.9	91.6	91.5	91.5	91.5	91.6	91.9	91.8	91.9	92.6	92.6	93.0	93.4	93.6	93.8	94.2	94.8	95.0	95.1	92.78
6	95.6	95.8	95.9	96.2	96.6	96.8	97.2	97.5	97.6	97.9	98.3	98.3	98.6	98.6	98.6	98.4	98.4	98.6	98.8	98.8	98.7	98.7	98.6	98.7	97.80
7	98.7	98.7	98.7	98.7	98.7	98.8	99.1	99.2	99.4	99.4	99.4	99.6	99.9	00.2	00.4	00.4	00.6	00.6	00.7	01.0	01.0	01.1	01.6	01.8	99.90
8	01.8	01.8	02.0	02.0	02.0	02.3	02.4	02.7	03.0	03.2	03.5	03.8	04.0	04.2	04.4	04.7	05.0	05.2	05.6	05.9	06.0	06.2	06.3	06.3	03.93
9	06.3	06.4	06.4	06.4	06.4	06.6	06.7	07.0	07.1	07.2	07.4	07.5	07.8	07.9	07.9	07.9	07.9	07.9	07.9	08.0	08.3	08.6	08.7	08.7	07.45
10	08.7	08.8	09.0	09.0	09.0	09.1	09.2	09.4	09.6	09.8	10.0	10.3	10.7	10.7	10.7	10.7	10.8	10.8	11.0	11.0	11.0	11.0	11.0	11.1	10.10
11	11.1	11.0	11.0	11.0	11.0	11.0	11.0	10.8	10.8	10.8	10.8	10.8	10.8	10.7	10.6	10.2	10.0	09.9	09.9	09.9	09.9	09.6	09.5	09.4	10.48
12	08.4	08.3	08.2	07.8	07.6	07.1	06.8	06.7	06.2	05.9	05.8	05.6	05.2	05.1	05.1	04.8	04.4	04.4	04.2	04.0	03.5	03.5	03.5	03.1	05.63
13	02.8	02.3	02.3	02.2	02.0	01.8	01.4	01.2	01.4	01.6	01.9	02.3	02.7	02.7	02.8	03.1	03.2	03.5	03.9	03.9	03.8	03.5	03.5	03.5	02.64
14	03.4	03.4	03.4	03.1	02.7	02.4	02.2	01.9	01.9	01.6	01.6	01.0	00.4	99.9	99.5	99.2	98.8	98.3	97.6	97.2	97.6	97.0	96.6	96.6	00.30
15	96.4	96.3	96.3	96.3	96.3	96.3	97.0	97.5	97.9	98.3	99.5	99.9	00.8	01.6	02.0	03.0	03.4	03.6	03.4	04.2	04.3	05.6	06.0	06.4	00.51
16	06.8	07.0	07.0	07.1	07.0	06.6	06.8	07.0	06.4	06.8	07.5	08.2	08.3	08.8	08.8	09.5	09.9	10.3	10.3	11.2	11.6	11.8	12.0	12.8	08.73
17	13.1	13.2	13.2	13.4	13.6	14.0	14.3	14.6	15.4	15.5	15.5	15.5	15.5	15.4	15.4	15.5	15.2	15.1	14.7	14.7	14.6	14.0	14.0	13.6	14.54
18	13.8	13.6	13.5	13.5	13.5	12.3	12.2	12.2	12.2	12.7	13.1	12.3	12.3	12.6	12.4	12.6	12.2	11.8	11.5	11.4	11.0	11.0	11.0	10.8	12.31
19	10.6	09.9	09.8	09.6	09.5	09.4	09.2	08.8	08.7	08.7	08.6	08.7	09.0	08.8	08.4	08.4	08.3	08.2	07.9	07.9	07.9	07.8	07.9	07.9	08.75
20	07.9	07.8	07.6	07.6	07.6	07.5	07.4	07.4	07.4	07.2	07.2	07.2	07.1	07.1	07.0	07.0	06.6	06.3	06.0	05.9	05.6	05.4	05.0	04.4	06.80
21	04.0	03.1	03.0	02.8	02.8	02.3	01.9	01.2	01.6	01.9	01.8	01.4	01.0	00.8	00.4	00.4	99.1	99.2	98.7	99.4	99.2	99.2	99.1	99.0	00.97
22	99.2	98.3	97.9	97.9	97.4	96.7	96.8	96.6	96.3	96.3	96.4	96.0	95.9	95.1	94.8	94.6	94.3	94.0	93.2	93.1	93.1	93.1	93.0	92.8	95.53
23	92.8	92.7	92.6	92.7	92.7	92.6	92.6	92.8	93.1	93.5	94.0	94.3	94.4	94.6	94.6	94.6	94.4	94.3	93.9	94.3	94.3	94.3	94.3	93.5	93.66
24	93.1	93.0	93.0	92.3	92.0	92.0	91.9	91.9	91.9	92.3	92.8	93.0	93.1	93.2	93.9	94.2	94.0	93.9	93.9	94.3	94.4	94.7	94.7	94.8	93.26
25	95.0	95.0	95.5	95.8	96.0	96.2	96.4	97.1	97.2	97.9	98.3	98.8	99.4	99.9	00.0	00.4	00.8	01.2	01.5	01.6	01.8	01.9	02.2	02.2	98.84
26	02.2	02.2	02.2	02.2	02.2	02.2	02.3	02.4	02.4	02.4	02.4	02.4	02.4	02.4	02.4	02.6	02.6	02.4	02.4	02.4	02.6	02.7	02.7	02.8	02.41
27	02.7	02.7	02.7	02.8	03.0	03.2	03.9	04.2	04.8	05.1	05.5	05.9	06.6	06.8	07.5	07.9	08.7	09.2	09.5	09.8	10.4	10.6	10.8	11.0	06.47
28	11.1	11.5	11.5	11.2	11.2	11.1	11.0	11.1	11.1	11.2	11.6	11.5	11.4	10.8	10.4	09.8	09.1	08.0	08.0	07.5	06.8	06.0	04.6	02.6	09.59
29	01.6	00.7	99.4	98.4	96.3	95.9	95.4	93.6	92.7	91.6	90.0	89.1	88.6	88.2	87.2	88.4	88.3	88.8	88.4	88.8	89.4	90.3	91.0	91.6	92.24
30	92.6	93.1	93.4	94.0	94.4	94.7	95.2	96.0	96.8	97.2	98.0	98.7	98.2	98.3	98.4	98.8	99.1	99.4	99.6	99.6	99.5	99.4	99.0	98.2	97.15
M.	00.52	00.38	00.32	00.23	00.14	00.03	00.06	00.08	00.18	00.28	00.47	00.56	00.64	00.68	00.68	00.81	00.79	00.82	00.75	00.88	00.89	00.93	00.93	00.86	00.54

Oktober.

Datum	1a	2a	3a	4a	5a	6a	7a	8a	9a	10a	11a	MT	1p	2p	3p	4p	5p	6p	7p	8p	9p	10p	11p	MN	Mittel
1	97.0	96.6	96.2	95.4	92.6	91.8	90.6	88.4	89.1	88.6	87.4	86.2	87.0	87.0	86.6	86.2	86.2	85.2	85.1	84.2	83.8	82.8	82.4	81.9	88.26
2	81.4	81.2	80.4	80.2	80.3	80.8	81.2	81.5	82.3	81.9	81.6	81.2	82.0	85.2	85.5	86.2	86.4	87.0	86.7	86.6	86.6	86.4	86.0	85.2	83.49
3	84.0	83.5	82.2	80.7	80.2	79.6	79.9	79.4	79.4	78.8	78.0	78.6	78.2	77.9	77.8	77.2	76.6	76.4	76.3	76.3	76.3	76.4	76.8	77.2	78.65
4	77.8	78.3	79.0	79.6	80.4	81.4	82.2	83.6	84.6	85.0	85.4	85.5	85.8	85.9	85.0	85.0	84.7	84.8	84.3	84.2	84.2	83.9	83.8	83.8	83.26
5	83.8	83.9	83.9	84.8	84.4	84.3	84.7	85.0	85.9	86.3	86.7	87.6	87.9	88.6	89.0	89.2	89.6	89.6	90.2	90.4	90.2	89.9	89.6	90.2	87.32
6	90.2	90.3	90.2	90.0	89.4	88.8	88.7	88.0	88.6	89.2	89.5	89.6	90.2	90.3	90.4	90.4	90.6	90.6	90.7	90.7	90.8	91.2	91.5	91.8	90.07
7	91.8	91.8	91.9	91.9	91.9	92.0	92.0	92.7	93.0	93.0	93.2	93.6	94.2	94.3	94.4	94.4	94.6	94.8	95.0	95.4	95.5	95.9	96.0	96.2	93.73
8	96.0	96.0	96.2	96.0	96.4	97.1	97.2	97.8	97.5	97.5	97.1	96.8	96.7	96.6	96.4	96.0	95.4	94.2	93.2	92.3	90.7	89.0	86.7	85.4	94.76
9	84.0	81.2	78.6	76.7	74.4	73.8	71.9	70.8	72.6	72.2	71.6	70.8	70.7	69.9	69.5	69.4	69.1	67.9	68.8	69.2	69.4	69.6	70.4	70.4	72.20
10	70.4	70.6	69.8	69.6	69.4	68.0	67.4	66.2	65.8	66.7	66.6	66.3	67.0	66.4	67.2	68.4	68.7	69.2	69.4	69.5	70.7	71.5	72.4	73.0	68.76
11	74.2	75.0	75.5	75.9	76.7	77.2	78.3	78.7	78.8	79.6	80.7	81.4	81.8	82.8	82.8	83.0	83.4	83.5	83.9	83.9	84.0	84.2	84.3	84.4	80.58
12	84.4	84.4	84.6	85.0	85.1	85.2	85.4	85.6	85.6	86.2	86.8	87.1	87.4	88.0	88.3	88.8	89.1	89.2	89.9	90.2	90.2	90.4	91.4	91.5	87.49
13	91.8	92.2	92.4	93.0	93.5	93.6	94.4	95.0	95.6	95.9	96.0	96.6	97.4	97.6	98.0	98.4	98.7	99.1	99.4	99.4	99.4	99.5	99.6	99.8	96.51
14	99.9	99.9	99.9	99.9	99.9	99.9	00.0	00.0	00.3	00.6	00.4	00.4	00.4	00.3	00.3	00.3	00.4	00.4	00.3	00.3	00.3	00.3	00.2	00.0	00.19
15	99.8	99.8	99.5	99.5	99.4	99.4	99.2	99.2	99.2	99.2	99.2	99.2	99.1	99.0	98.8	98.7	98.7	98.6	98.4	98.4	98.4	98.3	98.0	97.8	98.95
16	97.2	96.8	96.7	96.6	96.3	95.9	95.9	95.9	96.0	96.2	96.2	96.0	96.0	96.0	96.2	96.4	96.2	96.0	95.8	95.5	95.1	95.0	95.4	95.4	96.03
17	95.6	95.8	95.8	95.6	95.6	95.6	95.5	95.4	95.2	95.5	95.8	95.9	95.9	96.2	96.2	96.4	96.6	96.8	96.8	97.0	97.0	97.1	97.2	97.2	96.15
18	97.4	97.4	97.6	98.2	98.3	98.4	98.6	98.7	99.2	99.6	99.9	00.2	00.4	00.7	00.8	00.8	00.8	00.8	01.0	01.0	01.0	00.8	00.7	00.3	99.69
19	00.2	00.0	99.8	99.6	99.2	98.8	98.7	98.6	98.3	98.2	97.6	97.8	97.2	96.4	96.4	96.0	95.9	95.6	94.4	94.3	94.0	93.0	92.8	92.0	96.87
20	91.6	91.2	90.8	89.8	89.6	89.2	88.8	88.7	88.7	88.7	88.7	88.7	88.7	88.7	88.8	89.0	89.1	89.4	89.6	89.8	90.2	90.6	90.8	91.4	89.61
21	91.6	91.9	92.3	92.8	93.0	93.2	93.5	94.3	94.4	95.0	95.6	95.9	96.7	97.5	98.0	98.6	98.8	99.4	00.0	00.3	00.4	00.7	00.7	00.8	96.48
22	01.0	01.1	01.1	01.1	01.1	01.0	00.8	00.6	00.3	99.9	99.6	99.2	99.1	98.8	98.6	98.2	98.0	97.8	97.5	97.2	97.2	97.1	97.0	97.0	99.18
23	96.8	96.3	96.0	95.6	95.4	95.2	95.0	95.0	94.4	93.9	94.2	93.9	93.2	93.4	93.1	93.2	92.8	93.0	91.5	91.1	90.6	91.1	90.6	90.6	93.58
24	90.2	90.3	90.3	90.3	90.4	90.4	90.4	90.4	90.3	90.3	90.4	90.0	89.8	89.9	90.0	89.9	89.9	89.9	90.0	90.0	90.0	90.0	90.0	90.6	90.15
25	90.4	90.2	90.2	90.2	89.2	87.6	87.1	87.2	87.5	89.0	89.6	89.8	90.2	90.4	90.4	90.4	90.4	90.6	90.6	90.6	90.7	91.1	91.2	91.9	89.85
26	92.6	93.1	93.5	93.8	94.2	94.8	95.2	96.2	96.4	96.8	97.1	97.2	97.5	97.8	97.9	98.2	98.3	98.6	99.0	99.4	99.6	99.9	00.3	01.1	97.02
27	01.4	01.8	02.8	03.1	03.5	04.2	04.4	04.8	05.2	05.9	06.3	06.4	06.6	07.1	07.4	07.5	07.6	07.6	07.8	07.8	07.8	07.5	07.4	07.2	05.80
28	07.1	07.0	06.6	05.9	05.9	05.8	05.5	05.6	05.2	04.8	04.3	04.0	03.1	02.8	02.2	02.0	01.9	01.6	01.5	01.5	01.5	01.5	01.4	01.5	03.76
29	01.6	01.4	01.4	01.2	01.0	01.1	01.2	01.8	02.0	02.2	02.6	03.1	03.4	03.5	03.8	04.2	04.8	05.1	05.2	05.4	05.4	05.5	05.2	05.1	03.22
30	05.0	05.0	05.0	05.0	04.8	04.8	04.8	05.0	05.1	05.2	05.8	06.0	06.2	06.3	06.3	06.6	07.6	07.8	09.0	09.9	10.6	11.5	12.2	12.8	07.01
31	13.2	13.8	14.3	14.4	14.4	14.8	14.8	15.0	15.0	15.2	15.4	15.5	16.0	17.0	17.6	18.3	19.4	19.8	21.0	21.1	21.9	22.3	22.7	23.5	17.35
M.	92.88	92.83	92.73	92.63	92.45	92.38	92.36	92.42	92.63	92.81	92.88	92.92	93.09	93.30	93.35	93.46	93.56	93.56	93.62	93.64	93.66	93.68	93.70	93.77	93.10

$H = 904$ m, $H_b = 892.8$ m — $\varphi = 69^0\ 56'$ N

$C_g = 1.65$ mb bei 915 mb — $\lambda = 22^0\ 56'$ E

November.

Datum	1a	2a	3a	4a	5a	6a	7a	8a	9a	10a	11a	MT	1p	2p	3p	4p	5p	6p	7p	8p	9p	10p	11p	MN	Mittel
	800 oder 900 mb +																								
1	23.6	24.0	24.4	24.6	25.0	25.2	25.4	25.5	25.8	**25.9**	25.9	25.9	25.9	25.9	25.9	25.8	25.6	25.2	25.1	24.7	24.4	24.1	23.5	**22.8**	25.00
2	**22.3**	21.6	21.2	20.6	19.9	19.2	18.6	18.2	18.0	17.6	17.1	16.4	15.9	15.1	15.0	14.4	13.6	13.4	12.4	12.2	11.6	11.1	10.8	**10.6**	16.12
3	**09.6**	09.2	08.8	08.3	08.0	07.6	07.1	06.6	06.2	05.5	05.2	05.1	05.0	04.3	04.0	03.1	02.7	02.2	00.8	00.2	99.9	99.1	98.6	**97.9**	04.38
4	**97.0**	96.0	95.4	94.6	93.5	92.2	91.8	91.5	91.2	91.0	90.8	90.8	90.3	90.2	89.9	89.6	89.5	89.1	89.1	89.1	89.2	89.1	89.0	**88.6**	91.19
5	88.4	88.4	88.4	88.3	88.3	88.2	**88.0**	88.0	88.2	88.3	88.3	88.3	88.4	88.6	88.7	89.0	89.5	89.8	89.9	90.0	90.3	91.0	91.1	**91.4**	89.03
6	**91.5**	91.8	92.0	92.4	92.6	92.8	93.0	93.1	93.4	93.9	94.2	94.2	94.3	94.3	94.3	94.4	95.0	95.2	**95.4**	95.4	95.2	95.2	95.2	95.1	93.91
7	**95.1**	94.7	94.4	93.9	93.8	93.8	93.6	93.5	93.5	93.4	93.1	92.7	92.6	92.2	91.8	91.6	91.4	91.0	90.7	90.4	90.2	90.0	**89.8**	89.8	92.38
8	**89.8**	89.8	89.8	89.9	89.9	89.9	89.9	90.0	90.2	90.3	90.3	90.3	90.3	90.4	90.6	90.6	90.7	90.8	91.1	91.1	**91.2**	91.2	91.0	91.1	90.42
9	**91.1**	91.2	91.2	91.4	91.4	91.4	91.6	91.8	91.9	92.3	92.3	92.4	92.6	92.7	92.8	92.8	93.1	93.2	93.4	93.6	94.0	94.3	**94.6**	94.4	92.56
10	94.3	94.0	94.0	94.0	**93.8**	93.8	94.2	94.2	94.6	95.5	95.6	95.8	95.9	96.2	96.3	96.4	96.3	96.7	97.1	96.7	97.0	**97.2**	97.0	97.1	95.57
11	97.4	97.2	97.5	97.9	98.4	98.4	98.8	99.4	**99.5**	99.4	98.2	98.4	98.0	97.1	96.3	96.7	96.2	95.5	95.2	94.8	94.2	93.5	93.4	**92.8**	96.84
12	92.8	93.0	93.8	94.2	94.2	**94.4**	94.2	93.9	93.1	92.7	91.6	91.1	90.6	90.0	**89.8**	90.0	90.2	90.6	91.1	91.9	92.7	93.2	93.8	94.2	92.38
13	**95.4**	95.5	95.9	96.8	96.8	96.8	97.0	97.0	97.1	97.2	97.9	98.4	99.2	00.8	00.2	01.1	02.6	02.8	03.4	03.5	03.9	04.4	**04.6**	04.6	99.70
14	04.3	**04.4**	04.4	03.9	03.9	03.2	04.0	04.3	04.0	03.8	03.6	03.5	02.7	02.2	02.2	02.0	01.5	01.2	01.0	00.8	00.6	00.6	00.4	**00.3**	02.62
15	00.6	99.9	99.9	99.6	99.6	99.5	99.4	99.5	99.5	**98.4**	00.0	99.6	00.6	00.8	01.2	02.4	02.6	03.6	04.4	04.6	04.4	05.2	05.5	**06.6**	01.56
16	05.8	06.3	06.8	07.4	07.9	07.9	07.9	**08.2**	08.0	07.9	07.6	07.1	06.3	05.6	05.1	03.6	04.0	03.2	03.0	02.7	**01.9**	02.0	02.0	01.0	05.46
17	**01.9**	02.0	02.2	02.2	02.2	02.4	02.8	03.1	03.5	04.2	04.4	04.6	04.8	05.4	05.8	06.3	06.2	05.5	06.0	06.2	06.7	06.4	**07.1**	06.6	04.52
18	**06.8**	06.0	04.7	03.6	00.8	99.5	98.2	96.7	95.6	94.3	93.6	92.3	90.8	90.3	87.1	86.4	85.9	83.6	84.7	83.4	82.3	**81.6**	83.5	83.1	92.28
19	80.0	80.4	80.2	81.1	80.3	**79.6**	80.4	83.8	**83.9**	83.9	83.8	83.6	83.1	83.0	82.7	82.7	82.7	82.6	82.7	82.7	82.7	83.1	83.1	83.5	82.32
20	83.0	**82.7**	83.2	83.4	83.5	83.6	83.6	85.8	86.4	87.0	87.8	88.0	88.7	89.1	89.8	90.4	91.0	91.6	92.0	92.3	**92.4**	92.4	92.3	92.3	88.01
21	92.3	92.3	92.3	92.2	92.0	**91.9**	91.9	92.0	92.3	92.4	92.7	93.0	93.1	93.0	92.8	92.3	92.0	92.6	93.0	93.2	93.6	93.9	94.0	**94.6**	92.72
22	95.1	**95.4**	95.2	94.4	94.3	93.4	93.6	93.6	93.4	93.0	92.4	91.5	91.9	90.3	90.6	89.4	87.6	88.0	87.2	**87.1**	87.1	87.4	87.5	87.6	91.12
23	87.8	87.8	87.8	87.6	87.6	87.8	87.5	**88.0**	87.9	87.8	87.8	87.8	87.8	87.9	87.8	87.5	86.8	86.8	86.8	86.4	86.4	85.8	85.0	**84.6**	87.20
24	**84.0**	83.5	82.4	81.9	81.1	**80.4**	80.4	80.7	80.8	81.0	81.0	81.1	81.0	81.0	81.2	81.4	81.5	82.0	82.3	82.7	83.4	83.6	83.8	84.0	81.92
25	**84.8**	85.2	85.5	85.8	86.0	86.6	86.8	87.0	87.8	88.0	88.3	88.6	89.0	**89.2**	89.1	88.8	89.1	89.0	89.0	89.1	89.0	88.8	88.7	88.6	87.82
26	88.2	88.0	88.0	87.9	88.0	87.5	87.1	87.1	87.2	**87.0**	87.6	88.6	88.6	89.2	90.0	90.7	90.8	91.4	92.0	92.6	93.1	93.5	93.8	**94.0**	89.66
27	**94.6**	95.0	95.1	95.1	95.2	95.6	95.4	95.2	95.6	95.5	96.0	96.2	96.3	97.0	97.2	97.8	98.2	98.7	00.6	01.0	01.4	01.8	02.4	**02.8**	97.49
28	02.8	03.0	03.5	03.6	03.8	03.8	03.8	04.2	04.2	**04.3**	04.3	04.3	04.2	04.2	04.0	03.6	03.5	03.5	03.6	03.4	03.2	03.1	03.0	**02.6**	03.65
29	**02.2**	01.6	01.5	01.2	00.8	00.3	00.2	00.2	00.2	00.2	00.2	00.0	99.9	99.8	99.6	99.4	99.2	99.0	98.8	98.8	98.7	98.4	97.9	**97.4**	99.81
30	**96.0**	96.0	95.9	95.6	95.4	95.2	95.0	94.6	94.0	93.5	93.4	93.4	93.5	93.2	93.2	93.1	93.0	92.7	92.6	92.0	91.1	90.4	90.0	**88.7**	93.40
M.	**96.65**	96.53	96.51	96.45	96.27	96.06	96.04	96.22	96.23	96.17	96.17	96.10	96.04	95.97	95.83	95.78	95.73	95.68	95.81	75.75	95.73	95.71	95.75	**95.65**	96.03

December.

Datum	1a	2a	3a	4a	5a	6a	7a	8a	9a	10a	11a	MT	1p	2p	3p	4p	5p	6p	7p	8p	9p	10p	11p	MN	Mittel
1	**90.3**	91.0	91.2	92.0	92.4	92.8	93.1	93.5	93.5	93.8	93.9	94.0	94.2	94.3	94.3	94.3	94.4	94.3	94.3	94.4	94.6	94.8	95.0	**95.1**	93.56
2	**95.2**	95.4	95.4	95.5	95.8	96.0	96.4	96.8	97.5	98.0	98.4	98.7	99.5	99.8	00.4	00.8	01.4	02.2	02.4	02.7	03.0	03.2	03.9	**04.0**	99.27
3	04.3	04.6	05.1	05.6	**05.8**	05.6	05.5	05.4	05.1	04.6	04.2	03.8	03.0	02.4	01.1	99.6	98.0	96.4	93.6	92.2	91.2	90.0	88.7	**87.5**	00.14
4	**86.3**	86.0	84.4	84.2	83.8	82.2	82.3	83.0	80.0	80.0	79.6	79.1	77.8	77.5	**77.1**	77.2	78.2	78.7	79.2	79.8	80.3	81.5	82.0	83.0	80.97
5	**83.0**	84.0	84.8	85.1	87.0	87.4	88.7	90.2	90.4	91.5	92.0	92.7	93.4	94.3	94.6	95.0	**95.2**	95.2	95.2	94.7	93.0	93.1	93.4	92.6	91.10
6	91.5	90.4	88.6	87.1	85.4	84.4	82.7	82.4	81.9	**81.2**	81.2	81.8	81.4	81.8	82.7	83.9	84.7	85.8	86.6	86.6	87.6	89.4	91.2	**92.4**	85.53
7	92.7	93.6	93.9	94.0	93.9	93.8	94.3	95.0	**95.4**	95.2	95.1	94.4	93.9	93.8	93.1	92.7	92.0	91.0	90.2	89.4	89.2	89.6	89.6	**89.4**	92.72
8	**89.4**	90.6	90.6	90.4	90.3	89.8	90.3	90.7	91.1	91.0	91.5	92.0	91.5	92.4	92.3	92.8	93.0	93.2	93.2	92.4	93.1	93.5	93.9	**94.0**	91.79
9	94.0	94.2	94.3	94.3	94.3	94.2	94.2	94.2	94.2	94.2	**94.7**	94.7	94.7	94.7	94.3	94.0	94.2	94.0	93.9	94.0	94.0	93.9	93.6	**93.2**	94.17
10	92.4	91.9	91.0	90.3	89.5	89.0	88.2	87.8	87.8	87.6	87.0	86.7	**86.6**	86.6	87.2	88.4	89.4	90.8	91.5	91.9	92.8	93.1	94.3	**94.4**	89.84
11	**94.8**	95.1	95.4	95.8	95.9	96.0	96.2	97.1	97.5	97.8	98.0	98.0	98.2	98.2	98.3	98.4	98.6	98.8	98.8	99.0	99.0	99.1	**99.2**	99.2	97.60
12	99.1	**99.0**	99.0	99.0	99.0	99.0	99.0	99.1	99.8	99.9	99.9	99.9	99.8	99.8	99.8	99.8	99.8	99.8	99.8	99.9	00.0	00.4	01.0	**01.4**	99.71
13	**01.5**	01.6	01.8	01.9	02.6	02.8	03.1	03.6	03.9	03.9	04.0	04.2	04.2	04.4	04.4	04.6	05.0	05.1	05.2	05.5	05.6	05.8	05.9	**06.0**	04.02
14	**06.3**	06.3	06.3	06.3	06.4	06.4	06.6	06.7	06.8	07.0	07.1	07.1	07.2	07.4	07.4	07.4	07.4	07.4	**07.5**	07.5	07.4	07.4	07.2	07.4	07.00
15	**07.2**	07.1	07.1	07.1	07.1	07.0	06.7	06.3	06.2	06.0	05.8	05.5	05.0	04.4	04.2	03.6	03.0	02.6	01.4	01.1	99.9	99.8	99.0	**98.3**	04.22
16	95.0	**96.3**	95.4	94.6	93.2	92.4	91.0	90.3	89.4	89.9	88.4	**87.0**	87.5	88.3	88.6	88.7	89.1	89.4	89.6	89.8	89.6	89.1	89.0	88.6	90.42
17	88.3	88.2	**88.0**	88.4	88.7	88.7	88.7	88.7	89.4	89.9	90.3	90.6	90.6	90.7	90.7	91.1	91.5	91.8	92.0	**92.2**	92.2	92.0	91.9	91.9	90.27
18	**91.9**	91.9	91.9	91.9	91.9	91.9	91.9	91.8	91.8	91.6	91.4	91.1	90.6	90.3	90.3	90.3	90.2	89.6	89.2	89.0	88.7	88.3	87.5	**87.2**	90.51
19	**86.7**	86.2	85.8	85.6	84.8	84.4	84.2	83.2	83.1	82.8	82.0	81.8	81.6	81.1	80.7	80.3	80.0	79.6	79.1	79.1	**78.7**	78.7	78.8	79.0	81.97
20	**79.2**	79.4	79.6	80.2	80.6	81.0	81.4	82.0	82.7	83.6	84.6	85.5	86.7	87.4	88.3	88.7	89.5	89.6	90.2	90.7	91.2	91.9	92.4	**93.0**	85.81
21	**93.5**	93.9	94.7	94.8	95.1	95.2	95.4	95.9	96.3	96.3	96.2	96.2	95.9	95.8	95.6	96.0	96.2	96.3	96.4	96.7	96.8	96.8	**97.0**	97.0	95.83
22	**97.0**	96.8	96.8	96.7	96.4	95.9	95.9	95.2	95.0	94.7	94.6	95.6	95.4	95.4	95.6	95.2	95.4	95.0	94.3	93.8	93.2	92.6	**90.3**	90.4	94.88
23	88.4	87.8	86.8	85.8	84.8	**84.0**	86.2	86.4	84.7	85.2	85.5	85.8	87.9	86.8	86.3	88.2	88.0	88.2	88.3	88.3	88.3	88.8	**89.0**	88.8	87.01
24	**88.8**	88.7	88.7	88.6	88.2	88.2	87.9	87.9	87.9	87.8	87.9	87.9	87.2	87.5	86.8	86.8	86.6	86.3	86.3	86.2	85.9	**85.8**	85.8	85.8	87.31
25	**85.6**	85.4	85.5	85.5	85.2	85.1	**85.0**	85.0	85.2	85.4	85.4	85.4	85.4	85.5	85.5	85.4	85.2	85.2	85.4	85.4	85.2	85.2	85.2	85.1	85.31
26	85.1	85.0	84.8	84.7	84.6	84.2	84.2	84.3	**84.0**	85.0	84.8	85.6	85.8	86.2	86.2	86.4	86.4	86.6	87.2	87.4	87.5	88.0	**88.4**	88.4	85.87
27	**88.7**	88.8	89.0	89.1	89.1	89.2	89.5	89.6	89.6	89.8	89.8	89.9	89.9	89.8	89.9	**90.0**	89.9	89.8	89.8	89.6	89.5	89.4	89.2	89.2	89.50
28	**89.2**	89.1	87.9	87.8	87.8	87.2	86.8	86.6	86.6	86.3	86.3	86.4	86.3	85.2	84.6	85.1	85.9	83.8	84.4	84.6	83.6	83.1	82.8	**82.2**	85.82
29	**82.3**	82.2	81.6	81.9	81.8	81.8	81.8	81.9	81.9	81.6	80.8	79.6	79.5	79.1	78.3	78.8	78.7	77.8	76.6	76.6	77.0	75.2	**74.7**	74.8	79.43
30	75.2	**75.4**	74.6	74.6	75.2	74.4	74.4	74.2	74.8	74.8	74.0	72.8	73.0	71.2	71.5	70.7	70.4	69.8	68.3	68.0	68.2	67.9	67.4	**66.7**	71.98
31	66.6	66.7	66.7	66.8	67.1	**66.4**	66.6	66.8	67.0	67.0	67.2	67.2	67.6	67.9	68.3	68.7	69.0	69.2	69.9	70.7	71.5	71.8	71.9	**72.7**	68.39
M.	90.63	**90.73**	90.54	90.50	90.44	**90.21**	90.26	90.37	90.34	90.43	90.37	90.35	90.36	90.32	90.27	90.42	90.53	90.43	90.32	90.30	90.25	90.30	90.30	90.28	90.39

H = 904 m
h_l = 2.9 m

$\varphi = 69^0\ 56'$ N
$\lambda = 22^0\ 56'$ E

Januar.

Datum	1a	2a	3a	4a	5a	6a	7a	8a	9a	10a	11a	MT	1p	2p	3p	4p	5p	6p	7p	8p	9p	10p	11p	MN	Mittel
1	-3.5	-3.5	-3.5	-3.5	-3.7	-3.8	-4.5	-4.6	-4.5	-4.5	-4.2	-4.4	-4.7	-4.7	-4.7	-4.6	-3.7	-4.8	-4.8	-4.9	-5.3	-6.8	-7.2	-7.5	-4.66
2	-6.6	-6.1	-5.5	-5.3	-5.3	-5.5	-6.1	-6.1	-6.1	-6.2	-6.3	-6.4	-7.0	-6.1	-5.6	-5.3	-5.6	-5.9	-6.2	-6.3	-6.7	-7.4	-7.1	-7.3	-6.17
3	-7.2	-7.1	-7.0	-7.0	-7.0	-6.9	-6.7	-6.5	-6.4	-6.3	-6.3	-6.2	-6.1	-5.9	-5.7	-5.8	-5.7	-5.7	-5.7	-5.8	-6.0	-6.4	-6.6	-6.8	-6.37
4	-7.4	-7.7	-7.6	-7.6	-7.6	-7.7	-7.7	-7.7	-7.7	-7.4	-7.3	-7.4	-7.2	-7.2	-7.4	-7.7	-7.8	-7.9	-8.0	-8.3	-8.4	-9.1	-9.2	-9.3	-7.85
5	-9.4	-9.8	-10.1	-10.2	-10.4	-10.8	-11.0	-11.1	-11.1	-11.3	-11.6	-11.7	-11.8	-11.8	-11.7	-11.8	-11.3	-11.8	-11.8	-12.0	-11.7	-11.2	-11.0	-10.8	-11.13
6	-10.7	-10.6	-10.6	-10.5	-10.6	-10.5	-10.4	-10.1	-10.4	-10.2	-10.3	-9.8	-9.9	-9.8	-9.8	-9.3	-9.0	-8.8	-8.5	-8.5	-8.5	-8.4	-8.4	-8.4	-9.67
7	-9.0	-9.1	-8.7	-8.8	-8.6	-8.9	-9.1	-9.1	-9.1	-9.2	-9.4	-9.4	-9.3	-9.3	-9.5	-9.7	-10.1	-10.3	-10.7	-10.8	-10.8	-10.9	-10.8	-10.7	-9.64
8	-10.6	-10.7	-10.7	-10.9	-10.9	-10.7	-10.6	-10.8	-11.2	-11.5	-11.9	-12.1	-11.9	-12.0	-12.3	-13.0	-13.4	-13.7	-14.3	-14.5	-14.5	-14.5	-14.8	-14.4	-12.33
9	-14.1	-14.2	-14.2	-14.2	-14.6	-14.3	-14.2	-14.1	-14.1	-14.0	-13.9	-14.0	-14.0	-14.2	-14.0	-14.2	-14.4	-14.5	-14.7	-14.8	-14.6	-13.9	-13.5	-13.1	-14.16
10	-12.6	-12.0	-11.5	-10.8	-10.2	-9.1	-8.7	-7.8	-7.2	-7.2	-7.6	-7.8	-8.3	-8.7	-8.8	-8.6	-8.1	-8.0	-7.5	-7.6	-8.1	-7.8	-7.1	-7.5	-8.69
11	-8.1	-8.8	-9.2	-9.4	-9.5	-9.8	-10.1	-9.9	-10.2	-9.9	-10.6	-9.7	-8.9	-6.3	-5.4	-5.9	-5.5	-6.1	-12.5	-8.3	-7.8	-5.0	-3.1	-2.2	-8.01
12	-2.0	-2.3	-2.4	-2.4	-2.8	-2.7	-2.9	-2.7	-2.1	-1.9	-1.4	-1.2	-1.4	-0.4	-0.6	0.3	0.8	0.5	0.7	0.5	0.6	0.3	-1.1	-1.2	-1.16
13	-1.3	-1.9	-2.1	-2.3	-3.2	-3.8	-4.6	-4.9	-5.4	-5.6	-5.7	-5.7	-6.3	-7.0	-7.0	-7.8	-8.6	-8.8	-9.0	-9.1	-9.0	-8.9	-8.8	-8.9	-6.07
14	-8.8	-8.8	-8.8	-9.0	-9.3	-9.6	-9.0	-8.3	-8.1	-7.2	-4.3	-1.9	-3.0	-3.0	-5.6	-5.1	-4.4	-3.7	-3.7	-3.6	-3.8	-2.6	-3.2	-2.8	-5.73
15	-2.9	-2.5	-2.6	-2.4	-3.8	-3.7	-3.3	-3.2	-3.1	-2.1	-2.1	-2.1	-2.4	-2.9	-3.0	-3.0	-3.1	-3.2	-3.2	-3.5	-3.5	-3.9	-3.9	-3.3	-3.03
16	-3.9	-5.9	-7.5	-8.5	-9.3	-9.7	-9.8	-10.2	-10.2	-10.0	-10.0	-11.0	-10.6	-10.1	-9.4	-9.5	-7.4	-6.2	-4.6	-4.8	-4.4	-4.4	-5.2	-5.5	-7.84
17	-5.6	-6.3	-6.9	-7.4	-6.8	-6.8	-6.9	-6.9	-6.5	-6.6	-5.8	-6.8	-8.2	-8.5	-8.8	-8.7	-8.8	-8.2	-8.0	-7.7	-7.3	-7.3	-7.4	-6.6	-7.28
18	-7.6	-7.1	-6.1	-5.4	-4.6	-2.4	-1.5	-1.4	-1.5	-1.6	-1.8	-1.7	-2.7	-2.7	-2.7	-3.2	-5.0	-5.0	-5.5	-5.8	-6.8	-7.0	-6.9	-7.2	-4.30
19	-7.5	-7.6	-7.6	-8.1	-7.9	-7.8	-7.8	-7.9	-7.7	-7.3	-7.0	-7.4	-7.7	-7.2	-7.8	-9.8	-11.2	-12.3	-13.0	-13.5	-13.9	-13.8	-13.2	-12.5	-9.48
20	-11.8	-11.1	-10.5	-9.3	-8.2	-7.4	-6.4	-5.2	-4.8	-4.0	-3.1	-2.1	-1.5	-1.9	-1.8	-1.0	-0.7	-0.5	-0.4	-0.4	-0.3	-0.2	-0.2	-0.1	-3.87
21	-0.1	0.0	0.1	0.1	0.2	0.3	0.5	0.4	0.3	0.2	0.3	0.5	0.6	0.2	0.1	0.1	0.2	0.3	0.5	0.6	0.6	0.6	0.5	0.4	0.31
22	0.4	0.0	0.0	0.1	-0.1	0.0	0.0	-0.4	-0.2	-0.1	0.1	0.4	0.8	1.2	1.2	1.0	0.8	0.6	0.5	0.6	0.3	0.0	-0.2	-0.2	0.28
23	-1.0	-1.3	-1.4	-1.6	-1.5	-1.1	-1.4	-1.2	1.7	2.2	2.9	5.5	5.3	4.7	3.4	1.8	0.2	-0.8	-0.9	-0.4	-0.3	-0.4	-0.6	-1.3	0.52
24	-1.6	-2.3	-2.3	-2.6	-3.1	-3.4	-4.0	-4.1	-4.5	-4.4	-4.9	-4.9	-5.5	-5.7	-6.5	-6.5	-6.8	-6.9	-6.9	-7.4	-7.0	-6.7	-6.2	-6.6	-5.03
25	-6.2	-6.1	-5.7	-6.8	-7.6	-8.2	-8.1	-8.0	-8.7	-8.7	-8.8	-9.9	-10.6	-10.4	-10.9	-11.3	-11.7	-11.7	-11.6	-11.5	-11.4	-11.3	-11.2	-10.8	-9.47
26	-10.4	-10.2	-9.6	-9.4	-9.2	-8.9	-8.4	-8.3	-7.7	-6.8	-5.8	-5.0	-4.0	-3.1	-3.1	-3.0	-2.8	-2.4	-1.8	-1.7	-1.8	-1.9	-1.9	-1.9	-5.38
27	-2.3	-2.4	-2.4	-2.4	-2.1	-2.0	-2.0	-2.0	-1.8	-1.8	-2.0	-2.3	-2.4	-2.6	-2.7	-2.5	-2.5	-2.5	-2.5	-2.7	-2.8	-2.8	-2.8	-2.9	-2.38
28	-3.0	-2.9	-2.9	-2.9	-2.9	-2.9	-3.3	-3.5	-3.2	-3.4	-3.3	-3.4	-3.4	-3.5	-3.5	-3.4	-3.9	-3.7	-3.6	-3.6	-3.9	-3.6	-3.7	-3.7	-3.38
29	-3.9	-3.8	-3.9	-3.7	-3.6	-3.7	-3.8	-4.0	-4.9	-5.4	-5.6	-6.4	-6.9	-7.2	-7.4	-7.9	-8.1	-8.9	-9.9	-9.7	-10.7	-10.8	-11.0	-11.7	-6.79
30	-10.5	-10.6	-10.4	-10.3	-10.2	-9.9	-9.8	-9.8	-9.5	-9.4	-8.8	-8.9	-9.0	-8.9	-9.2	-9.2	-9.2	-9.3	-9.3	-9.2	-9.3	-9.7	-10.0	-10.1	-9.60
31	-10.0	-10.0	-9.9	-9.9	-9.8	-9.8	-9.7	-9.5	-9.2	-9.0	-8.9	-8.9	-8.8	-8.7	-8.5	-8.3	-8.2	-8.3	-8.3	-8.4	-8.6	-8.6	-8.5	-8.3	-9.00
M.	-6.43	-6.54	-6.50	-6.53	-6.59	-6.50	-6.49	-6.42	-6.29	-6.15	-5.98	-5.87	-6.03	-5.93	-6.09	-6.27	-6.29	-6.40	-6.62	-6.55	-6.64	-6.59	-6.59	-6.55	-6.37

Februar.

Datum	1a	2a	3a	4a	5a	6a	7a	8a	9a	10a	11a	MT	1p	2p	3p	4p	5p	6p	7p	8p	9p	10p	11p	MN	Mittel
1	-8.2	-8.1	-7.8	-7.6	-7.3	-7.2	-7.2	-7.2	-7.2	-7.2	-7.1	-7.2	-7.3	-7.4	-7.3	-7.3	-7.0	-6.8	-6.9	-6.4	-6.1	-6.3	-6.2	-6.1	-7.10
2	-5.4	-5.4	-5.2	-5.0	-5.1	-4.7	-4.6	-4.3	-4.5	-4.2	-4.2	-4.3	-4.3	-4.5	-4.7	-5.0	-5.2	-5.2	-5.1	-5.6	-5.3	-5.8	-5.3	-5.5	-4.93
3	-6.5	-5.7	-6.2	-5.8	-5.7	-7.5	-7.3	-7.3	-6.8	-6.3	-5.0	-4.5	-4.7	-5.0	-4.4	-4.4	-4.3	-4.7	-5.1	-5.1	-5.2	-5.5	-5.7	-5.9	-5.61
4	-6.5	-5.9	-5.6	-5.9	-5.2	-5.8	-5.9	-5.8	-5.2	-4.8	-4.8	-5.4	-5.4	-5.0	-4.7	-4.8	-5.0	-5.1	-5.2	-5.5	-5.9	-5.8	-6.1	-6.5	-5.49
5	-6.2	-6.1	-6.2	-5.5	-5.4	-5.4	-5.5	-5.5	-6.6	-6.7	-7.9	-7.2	-8.2	-9.5	-8.7	-11.3	-10.8	-10.0	-8.0	-8.2	-7.8	-7.2	-6.9	-6.6	-7.39
6	-7.2	-7.2	-7.2	-7.4	-7.6	-7.8	-8.8	-7.9	-8.0	-7.6	-7.6	-7.2	-7.6	-8.5	-8.8	-9.3	-10.0	-10.2	-10.7	-11.1	-11.2	-11.4	-11.4	-11.3	-8.88
7	-11.9	-12.1	-11.1	-11.2	-10.9	-10.8	-10.7	-11.0	-11.4	-11.6	-11.8	-11.9	-11.5	-11.7	-12.1	-11.8	-12.2	-11.9	-11.9	-11.4	-11.8	-11.7	-11.4	-11.1	-11.54
8	-11.4	-11.3	-11.0	-10.5	-10.4	-10.4	-10.6	-9.9	-9.0	-7.9	-8.0	-7.8	-8.5	-9.7	-9.8	-10.7	-12.0	-12.8	-13.0	-13.2	-12.7	-13.4	-12.3	-11.1	-10.72
9	-10.7	-10.2	-9.7	-9.6	-9.4	-8.7	-8.2	-7.6	-7.5	-7.4	-7.0	-6.9	-7.6	-7.6	-7.7	-7.6	-7.8	-8.1	-8.2	-8.3	-8.6	-8.9	-9.0	-9.1	-8.39
10	-9.2	-9.2	-9.1	-9.3	-9.6	-9.8	-9.9	-9.8	-9.9	-9.5	-9.2	-8.8	-8.4	-8.3	-8.3	-7.8	-7.8	-7.8	-7.7	-7.7	-7.7	-7.7	-7.7	-7.8	-8.67
11	-7.8	-7.8	-7.8	-7.7	-7.8	-7.8	-9.2	-10.0	-10.8	-10.7	-11.1	-11.9	-11.9	-12.1	-12.0	-11.4	-11.0	-10.8	-10.7	-10.6	-10.5	-10.4	-10.3	-10.2	-10.10
12	-10.1	-10.0	-9.9	-9.8	-9.7	-9.1	-8.4	-8.3	-8.0	-7.0	-6.6	-6.5	-6.2	-6.3	-7.1	-7.1	-7.7	-8.8	-8.5	-8.5	-9.5	-10.9	-11.6	-12.2	-8.66
13	-12.0	-11.1	-10.1	-8.6	-6.9	-5.0	-4.7	-4.6	-4.5	-4.2	-4.0	-3.9	-3.5	-3.5	-3.1	-3.7	-3.9	-4.0	-4.0	-3.8	-3.7	-4.6	-4.1	-4.0	-5.23
14	-4.1	-4.2	-4.2	-3.9	-4.5	-4.5	-4.3	-4.1	-3.7	-3.6	-3.7	-3.9	-4.1	-4.2	-3.7	-3.8	-3.8	-4.4	-3.9	-4.0	-4.3	-4.7	-4.8	-4.5	-4.12
15	-4.8	-4.7	-4.9	-5.4	-4.8	-4.9	-4.9	-4.8	-4.8	-4.6	-4.7	-4.6	-4.5	-4.4	-4.5	-4.7	-4.9	-5.1	-5.8	-5.9	-6.3	-6.5	-6.6	-6.2	-5.14
16	-6.2	-6.3	-6.5	-6.6	-6.6	-6.6	-6.4	-6.4	-6.3	-6.3	-6.3	-6.3	-6.3	-6.3	-6.3	-6.3	-6.3	-6.4	-6.4	-7.0	-7.2	-7.4	-7.3	-7.7	-6.57
17	-7.6	-7.9	-7.9	-7.6	-7.9	-7.9	-7.7	-7.4	-7.5	-7.3	-7.1	-6.9	-7.2	-7.2	-7.4	-7.7	-7.6	-7.9	-7.9	-7.9	-7.9	-7.9	-7.6	-7.5	-7.60
18	-7.2	-7.2	-7.2	-7.1	-7.0	-7.1	-7.4	-7.0	-6.9	-6.4	-6.8	-7.0	-7.1	-7.6	-7.7	-7.9	-8.2	-8.9	-9.1	-9.1	-9.3	-9.8	-10.1	-10.1	-7.88
19	-10.2	-10.2	-10.3	-10.5	-10.6	-11.0	-11.2	-11.3	-11.5	-11.2	-10.9	-10.3	-10.1	-10.2	-10.2	-10.4	-10.8	-10.7	-10.9	-11.1	-10.9	-11.2	-10.8	-10.8	-10.72
20	-11.0	-11.6	-11.6	-11.7	-11.6	-11.8	-12.2	-12.5	-12.7	-12.8	-12.3	-13.1	-12.4	-12.5	-13.2	-13.5	-13.6	-14.0	-14.6	-15.0	-15.3	-15.5	-15.6	-15.8	-13.16
21	-16.1	-16.4	-16.7	-16.4	-16.6	-17.1	-17.0	-17.2	-16.6	-15.7	-15.5	-15.2	-14.6	-13.6	-13.4	-13.2	-13.1	-13.0	-12.8	-13.2	-13.6	-13.9	-13.8	-13.8	-14.94
22	-13.9	-13.5	-13.3	-13.5	-13.6	-13.6	-13.4	-13.2	-13.4	-13.8	-13.5	-13.6	-13.6	-14.0	-14.6	-13.9	-13.7	-13.4	-14.1	-14.3	-14.5	-14.7	-14.0	-13.4	-13.77
23	-14.3	-13.3	-13.0	-12.6	-12.4	-12.3	-12.4	-12.3	-11.4	-11.3	-11.5	-11.6	-12.1	-12.3	-12.0	-11.4	-10.5	-11.3	-10.9	-10.8	-11.2	-10.6	-10.9	-10.8	-11.80
24	-11.5	-11.3	-10.6	-10.9	-11.3	-11.0	-10.5	-10.3	-10.1	-9.5	-9.9	-10.3	-9.5	-9.3	-9.7	-10.4	-10.3	-10.2	-10.3	-10.3	-10.5	-10.2	-10.3	-10.2	-10.35
25	-10.5	-10.8	-10.7	-10.6	-10.6	-10.5	-10.1	-9.4	-8.9	-8.5	-8.2	-8.6	-8.7	-8.8	-9.0	-9.3	-9.8	-10.4	-10.8	-11.0	-11.3	-11.3	-11.3	-11.2	-10.01
26	-11.3	-11.0	-10.7	-10.0	-9.5	-9.4	-9.3	-9.0	-8.5	-9.1	-9.1	-8.9	-8.1	-9.4	-10.0	-10.5	-10.3	-11.0	-11.2	-11.5	-12.0	-12.0	-13.1	-13.5	-10.35
27	-13.9	-13.6	-14.1	-13.8	-13.8	-13.7	-14.0	-14.2	-14.6	-15.6	-15.8	-16.7	-16.1	-15.9	-15.6	-15.6	-15.4	-15.2	-15.0	-14.7	-14.2	-13.9	-13.8	-13.9	-14.71
28	-14.7	-14.8	-14.7	-14.8	-14.8	-14.1	-14.0	-14.5	-13.8	-14.5	-13.9	-13.7	-13.8	-13.8	-13.9	-14.1	-14.8	-15.1	-15.3	-15.7	-15.8	-15.8	-15.9	-16.1	-14.68
M.	-9.66	-9.53	-9.40	-9.26	-9.16	-9.12	-9.14	-9.03	-8.93	-8.76	-8.70	-8.72	-8.69	-8.88	-8.92	-9.10	-9.21	-9.40	-9.43	-9.53	-9.65	-9.82	-9.78	-9.75	-9.23

H = 904 m
h_t = 2.9 m

$\varphi = 69^0\ 56'$ N
$\lambda = 22^0\ 56'$ E

März.

Datum	1a	2a	3a	4a	5a	6a	7a	8a	9a	10a	11a	MT	1p	2p	3p	4p	5p	6p	7p	8p	9p	10p	11p	MN	Mittel
1	-16.3	-16.5	-16.6	-17.5	-18.2	-18.9	-18.0	-19.7	-20.4	-21.3	-21.3	-21.4	-21.2	-20.4	-20.1	-21.1	-21.0	-21.1	-21.5	**-21.6**	-20.5	-19.4	-18.7	**-14.5**	-19.47
2	**-14.4**	-13.9	-13.8	-13.6	-12.7	-12.0	-11.4	-10.1	-10.1	-10.3	-9.3	-9.1	-8.5	-8.6	-8.4	-9.0	-8.9	-9.0	-8.6	-8.4	-8.5	-8.4	**-8.1**	-8.2	-10.14
3	-8.5	-8.4	-8.5	-8.1	-8.2	-8.0	-8.5	**-8.7**	-8.6	-6.9	-7.3	-7.2	-7.4	-6.7	-5.9	**-5.1**	-5.1	-5.4	-5.5	-5.3	-6.3	-6.3	-6.4	-7.2	-7.07
4	-8.1	-10.0	-8.2	-9.2	-9.3	-7.4	-11.6	**-15.1**	-10.5	-9.0	-9.0	-8.8	-8.3	**-7.9**	-8.1	-8.2	-8.3	-8.3	-8.4	-8.6	-8.8	-9.0	-9.1	-9.2	-9.10
5	**-9.3**	-9.4	-9.5	-12.6	-13.3	-13.7	-14.1	-17.1	-18.8	-17.6	-18.9	-18.9	-19.4	-19.8	-20.5	-20.7	-21.6	-21.4	-21.6	-22.1	**-22.3**	-22.1	-21.9	-21.5	-17.84
6	-21.7	-22.0	**-22.3**	-22.3	-22.0	-21.6	-21.3	**-21.1**	-21.3	-21.5	-21.6	-21.6	-21.7	-21.5	-21.5	-21.5	-21.5	-21.4	-21.5	-21.6	-21.7	-22.0	-22.3	-22.3	-21.70
7	-22.3	-22.6	-22.5	-22.4	-22.5	-22.6	-22.7	-22.7	**-22.8**	-22.7	-22.5	-22.2	-22.0	-20.8	-20.5	-20.0	-19.9	-20.6	-20.9	-21.1	-21.3	-20.3	-19.7	**-19.1**	-21.52
8	**-19.0**	-18.7	-18.6	-18.5	-18.4	-17.6	-17.4	-16.4	-16.3	-16.2	-16.0	-15.4	-15.1	-15.0	-15.0	-14.9	-14.6	-14.4	-14.2	-14.2	-14.2	-14.0	-13.9	**-13.8**	-15.91
9	**-13.7**	-13.8	-13.8	-13.9	-14.0	-14.0	-14.4	-14.5	-14.6	-14.6	-14.5	-14.6	-14.6	-14.7	-14.7	-14.7	**-14.8**	-14.6	-14.4	-14.4	-14.3	-14.3	-14.3	-14.3	-14.35
10	-14.4	-14.5	-14.5	**-14.6**	-14.5	-14.5	-14.4	-13.8	-13.3	-13.0	**-12.4**	-12.9	-13.2	-13.7	-13.5	-13.2	-13.0	-12.9	-12.6	-12.6	-12.7	-12.6	-13.0	-12.4	-13.45
11	-12.6	-12.4	-12.3	-11.8	-12.3	-12.0	-11.9	-11.7	-11.6	-11.7	-10.4	**-10.2**	-11.1	-11.4	-11.7	-11.9	-11.8	-11.9	-12.7	-13.1	**-13.2**	-13.2	-13.1	-12.7	-12.03
12	-12.7	-12.8	-13.1	-13.6	-13.4	-13.1	-13.1	-12.5	-12.0	-12.1	-11.8	**-11.7**	-11.8	-11.8	-12.0	-12.2	-12.5	-12.9	-13.0	-12.9	-13.1	-13.6	-13.5	**-14.0**	-12.72
13	-14.0	**-14.0**	-14.0	-13.9	-13.8	-13.9	-13.2	-12.9	-12.8	-13.5	-13.7	-13.2	**-12.7**	-12.7	-13.1	-13.3	-13.5	-13.5	-13.4	-13.3	-13.4	-13.6	-13.7	-13.9	-13.46
14	**-14.3**	-14.7	-15.1	-15.7	-16.6	-17.4	-17.7	-18.0	-18.0	-17.7	-17.8	-17.8	-17.1	-17.3	-17.4	-18.0	**-18.1**	-18.1	-17.8	-18.0	-17.6	-16.6	-16.6	-16.5	-17.08
15	-16.7	-17.2	-16.9	**-17.3**	-17.0	-16.8	-16.9	-16.7	-14.7	-13.1	-11.9	-11.7	**-11.6**	-12.3	-12.6	-12.6	-12.3	-12.3	-12.2	-12.3	-12.2	-12.2	-12.2	-11.9	-13.90
16	-11.8	-11.7	**-12.0**	-11.9	-11.5	-11.5	-11.3	-10.7	-9.7	**-8.5**	-8.6	-9.4	-10.3	-10.7	-11.5	-11.9	-12.0	-11.6	-11.7	-11.6	-11.4	-11.5	-11.1	-11.9	-11.08
17	-13.6	-13.5	**-14.1**	-13.7	-13.5	-10.9	-10.3	-9.5	-9.4	-11.3	-11.8	-11.9	-11.3	-12.4	-12.3	-11.6	-11.5	-11.1	-10.9	-10.9	-10.8	-11.0	-10.2	**-8.8**	-11.51
18	-8.5	-8.3	-8.6	-8.8	-9.1	**-9.2**	-9.2	-8.1	-6.5	-6.3	-4.9	-5.3	-4.5	**-4.0**	-4.2	-5.1	-5.4	-5.6	-5.9	-5.9	-6.5	-6.6	-6.5	-6.8	-6.66
19	-6.5	-6.5	-6.6	-6.5	-6.7	-6.8	-7.0	**-7.1**	-7.1	-6.8	-6.9	-6.7	-6.4	-5.5	-5.7	-5.9	-6.1	-6.1	-5.8	**-5.4**	-6.0	-6.0	-6.1	-5.8	-6.33
20	-5.4	-6.0	-6.0	-6.1	-5.8	-5.9	-5.6	-5.1	**-5.0**	-5.2	-5.3	-5.2	-5.8	-5.8	-6.5	-7.0	-7.4	-7.5	-7.5	-7.6	-8.0	-8.3	-8.8	**-9.2**	-6.50
21	-9.7	-10.0	**-10.0**	-9.8	-9.8	-10.5	-9.7	-9.7	-9.7	-9.5	-8.7	**-8.0**	-8.4	-8.5	-8.5	-8.9	-9.0	-9.0	-9.2	-9.2	-9.4	-9.4	-9.9	-9.9	-9.35
22	-10.0	-9.9	-10.0	-10.0	-10.0	-9.9	-9.8	-9.9	-9.5	-9.5	**-9.1**	-9.7	-9.6	-9.8	-9.8	-9.9	-10.1	-10.2	**-10.7**	-10.4	-10.3	-9.8	-9.8	-9.9	-9.90
23	-9.8	-9.5	**-10.3**	-9.5	-9.4	-8.8	-8.7	-8.4	-8.9	-8.8	**-8.4**	-8.8	-8.6	-8.8	-8.7	-9.1	-9.4	-10.0	-9.6	-9.9	-9.5	-9.7	-9.6	-9.4	-9.23
24	-9.5	-9.0	-8.8	-8.8	-8.5	-9.5	-8.9	-7.9	-7.9	-7.3	-6.4	-6.5	**-5.9**	-8.6	**-9.6**	-9.4	-9.3	-9.1	-8.8	-9.0	-8.9	-8.8	-8.9	-8.7	-8.50
25	-8.6	-8.6	-7.7	-7.6	-8.1	-7.8	-7.5	-7.3	-6.9	-7.1	-7.2	-7.4	**-6.9**	-8.0	-8.8	-8.8	**-9.2**	-9.1	-8.6	-8.5	-8.4	-8.4	-8.3	-8.6	-8.03
26	-8.7	-8.0	-8.1	-8.4	-8.2	-7.6	-7.3	-6.4	-5.7	-5.9	-5.2	**-4.4**	-4.9	-5.9	-6.4	-6.4	-6.2	-6.5	-6.8	-6.8	-7.0	-7.4	-7.6	-7.7	-6.81
27	**-7.6**	-8.0	-8.6	-8.5	-8.6	-9.2	-9.2	-10.2	-10.0	-9.9	-10.3	-10.5	-10.6	-10.9	-11.8	-12.9	**-13.8**	-13.6	-12.9	-12.0	-11.9	-12.5	-12.8	-12.6	-10.79
28	-11.7	-11.7	-11.7	-11.4	**-11.1**	-11.4	-11.4	-11.4	-11.7	-12.7	-13.7	-14.1	-14.2	-14.3	-14.4	-14.5	-15.3	-15.3	-15.3	-15.4	-15.5	-15.5	-16.1	**-16.3**	-13.59
29	**-16.4**	-17.0	-17.5	-18.6	-19.6	-19.8	-20.3	-20.7	**-21.2**	-21.1	-20.8	-20.6	-20.0	-19.8	-19.8	-19.7	-19.5	-19.2	-19.1	-19.0	-18.8	-18.5	-18.3	-18.4	-19.32
30	-18.8	**-19.0**	-19.0	-18.7	-18.5	-18.6	-18.2	-18.0	-17.9	-17.8	-17.7	-17.6	-17.5	-17.2	-15.3	-13.9	-11.6	-10.1	-9.1	**-7.3**	-8.1	-10.6	-10.5	-13.6	-15.19
31	-13.9	-14.1	**-14.4**	-13.6	-11.6	-9.8	-9.7	-9.0	-10.6	-8.5	-10.4	-10.4	-10.3	-10.8	-10.6	-10.5	-9.3	-8.8	-8.5	-8.3	**-8.0**	-8.0	-8.3	-8.0	-10.22
M.	-12.53	-12.62	-12.68	**-12.80**	-12.78	-12.60	-12.60	-12.59	-12.37	-12.17	-12.06	-12.04	**-11.96**	-12.12	-12.22	-12.32	-12.32	12.28	-12.22	-12.15	-12.21	-12.25	-12.24	-12.16	-12.35

April.

Datum	1a	2a	3a	4a	5a	6a	7a	8a	9a	10a	11a	MT	1p	2p	3p	4p	5p	6p	7p	8p	9p	10p	11p	MN	Mittel
1	-7.7	-7.7	-7.5	-7.6	-7.7	-7.6	-7.3	-7.0	-6.6	-6.7	-6.5	**-6.4**	-7.0	-7.3	-7.5	-7.7	-7.9	-8.1	-8.2	-8.3	-8.2	-8.2	-8.1	**-9.2**	-7.58
2	-10.0	-9.4	-9.5	-9.9	-9.4	-9.9	-9.6	-9.1	**-8.0**	-8.6	-8.5	-8.5	-8.4	-8.9	-9.3	-8.3	-8.8	-9.3	-9.9	**-10.6**	-10.4	-10.4	-10.2	-10.0	-9.37
3	**-9.3**	-9.1	-9.1	-9.0	-8.9	-8.5	-8.4	-8.3	-7.5	-6.8	-6.5	**-5.6**	-6.0	-5.9	-6.3	-6.6	-7.0	-7.9	-8.1	-8.2	-8.3	-8.3	-8.4	-8.6	-7.78
4	-8.4	-8.1	-8.0	**-7.8**	-8.5	-8.9	-9.6	-9.7	-9.9	-10.4	-10.3	-10.5	-10.5	-10.9	-11.0	-11.4	-11.5	-12.1	-12.4	-12.0	-12.0	-12.0	**-12.5**	-12.3	-10.45
5	-12.1	-12.0	-12.0	-12.1	-12.2	**-12.6**	-12.6	-12.0	-11.0	-10.3	-9.0	-7.4	-6.5	-5.6	-4.3	-3.4	**-2.2**	-3.6	-3.8	-4.4	-5.7	-6.1	-7.0	-7.5	-8.14
6	-7.3	-7.8	-7.8	-8.2	-8.5	-8.5	-8.6	-8.5	**-9.2**	-9.0	-8.2	-7.9	-7.9	-8.1	-8.0	-7.2	-5.7	-4.8	-4.7	-4.2	-2.8	-3.5	-2.7	**-2.6**	-6.74
7	-2.3	-2.0	**-1.9**	-1.9	-2.1	-2.4	-2.8	-3.0	-3.6	-3.7	-3.7	-3.9	-3.8	-4.5	-5.4	-6.0	-6.7	-7.3	-8.1	-8.2	**-8.3**	-8.0	-8.0	-8.0	-4.82
8	**-7.9**	-7.9	-7.7	-7.6	-7.5	-7.1	-6.7	-6.6	-6.4	-6.0	-4.2	-3.0	-1.4	-0.3	0.1	0.0	-0.3	-0.6	-0.4	-0.4	0.2	1.3	**1.5**	1.4	-3.23
9	**1.1**	0.8	0.4	0.1	0.0	0.0	0.1	0.0	-0.1	-0.4	-0.7	-1.1	-1.2	-1.5	-1.6	-1.8	-2.0	-2.1	-2.1	-2.4	-2.7	-3.0	-3.3	**-3.6**	-1.13
10	**-3.8**	-4.0	-4.2	-4.4	-4.7	-5.0	-5.2	-5.5	-5.6	-5.5	-5.4	-5.4	-5.4	-5.5	-5.8	-6.2	-6.4	-6.6	**-6.9**	-6.6	-6.5	-6.2	-5.9	-5.7	-5.52
11	**-5.3**	-4.9	-4.6	-4.1	-3.5	-2.8	-2.3	-1.5	-1.3	-1.3	-1.0	-1.0	-1.1	-1.2	-1.1	-1.0	-0.7	**-0.6**	-0.8	-0.9	-0.8	-0.9	-0.8	-0.8	-1.85
12	-1.0	-1.1	-1.0	-1.1	-1.2	-1.3	-1.4	-1.6	-1.5	-1.4	-1.3	-1.1	**-0.9**	-0.9	-1.1	-1.2	-1.5	-1.6	-1.8	**-1.8**	-1.8	-1.8	-1.7	-1.6	-1.36
13	-1.4	-1.3	-1.3	-1.2	-1.3	-1.3	-1.1	-1.2	-1.1	-1.0	**-0.9**	-1.2	-1.2	-1.2	-1.4	-1.3	-1.2	-1.6	-1.5	-1.6	-1.9	-2.1	**-2.2**	-2.2	-1.40
14	-1.6	-1.3	-1.5	**-1.8**	-1.4	-1.0	-0.6	-0.2	-0.1	0.2	-0.2	0.4	0.8	0.7	**1.1**	0.9	0.4	0.0	-0.6	-1.2	-1.2	-1.4	-1.2	-0.9	-0.49
15	-1.3	-1.8	-1.5	-1.0	-0.9	-0.4	-0.4	-0.2	-0.4	-0.3	0.0	**0.4**	0.3	-0.7	-1.1	-1.7	-1.9	-2.0	-2.2	-2.3	-2.3	**-2.5**	-2.3	-2.2	-1.20
16	**-3.2**	-3.2	-2.4	-3.0	-2.3	-2.3	-2.7	-2.8	-2.5	-2.4	-1.8	-1.4	-0.7	-0.1	-0.2	-0.2	-0.9	-0.7	0.5	0.6	0.8	**1.5**	1.2	1.1	-1.13
17	0.4	**0.7**	0.1	0.6	0.2	-0.8	-1.0	-1.2	-1.1	-0.7	-0.1	-0.2	0.1	0.2	0.0	-0.3	-0.7	-0.9	-1.0	-0.9	-0.9	-1.1	-1.2	**-1.3**	-0.46
18	**-1.3**	-1.7	-2.3	-2.5	-2.2	-2.2	-2.0	-2.0	-2.0	-1.8	-1.7	-1.9	-1.9	-1.9	-2.4	-2.3	-2.5	-2.9	-3.4	-3.7	-3.7	**-4.0**	-3.9	-3.7	-2.50
19	**-3.6**	-3.6	-3.6	-3.8	-3.8	-4.4	-4.6	-4.7	-4.7	-4.8	-4.8	-5.3	-5.2	-5.6	-5.6	-5.7	-5.9	-6.1	-6.3	-6.5	-6.8	**-6.9**	-6.8	-6.8	-5.25
20	-6.7	-6.7	-6.7	-7.2	-7.2	-7.0	-6.6	-6.3	-5.7	**-5.1**	-5.6	-5.8	-5.8	-6.0	-5.9	-6.2	-6.7	-6.8	-7.5	-7.5	-8.1	**-8.4**	-7.7	-7.5	-6.70
21	**-7.0**	-6.2	-5.9	-5.8	-5.6	-4.3	-4.2	-3.7	-3.5	-2.8	-3.5	-3.0	-2.8	**-2.7**	-2.8	-2.9	-3.0	-4.0	-4.3	-4.4	-4.2	-4.2	-4.4	-5.0	-4.18
22	-4.8	-4.9	-4.7	-4.6	-4.4	-3.8	**-2.6**	-3.1	-3.1	-3.4	-4.5	-4.6	-4.9	-5.5	-5.8	-5.6	-5.5	-5.5	-5.6	-5.3	-5.0	-5.1	-5.7	**-6.0**	-4.75
23	**-6.3**	-6.6	-6.6	-7.0	-6.7	-6.8	-7.0	-7.1	-7.1	-7.2	-7.2	-6.5	-6.3	-6.3	-6.6	-6.8	-7.0	-7.3	-7.7	-8.3	-9.0	-10.0	-10.8	**-11.3**	-7.48
24	-12.6	-12.9	-13.5	-13.8	**-14.4**	-14.3	-13.9	-13.5	-12.4	-11.6	-10.2	-9.1	-8.7	**-7.7**	-7.8	-8.3	-8.6	-8.9	-8.8	-8.7	-8.6	-8.6	-8.8	-8.9	-10.61
25	-9.4	-9.9	-10.1	-10.3	**-10.3**	-10.0	-10.0	-9.8	-9.5	-9.6	-9.6	-9.2	-8.3	-8.1	-8.4	-8.2	-7.9	**-7.7**	-7.8	-8.2	-8.2	-7.9	-8.0	-8.2	-8.94
26	-8.1	-8.0	-7.8	-7.7	-7.2	-6.7	-5.9	-5.8	-6.0	-5.4	-5.7	-5.3	**-5.2**	-5.9	-5.8	-6.1	-6.1	-6.3	-7.2	-7.2	-7.3	-7.6	-7.9	-8.2	-6.68
27	-9.1	-9.2	-9.4	-9.4	-9.5	-9.1	-9.1	-9.0	-8.7	**-8.4**	-8.4	-8.5	-8.7	-9.0	-9.1	-9.5	-10.1	-10.4	-10.7	-11.4	-11.6	-11.8	-11.9	**-12.1**	-9.75
28	-12.7	-13.0	**-13.1**	-12.8	-12.0	-11.3	-10.9	-10.0	-9.8	-8.9	-9.5	**-8.0**	-9.3	-9.2	-9.6	-9.6	-9.8	-9.9	-10.1	-10.1	-10.0	-10.0	-9.9	-9.6	-10.38
29	-9.5	-9.2	-9.1	-8.8	-8.7	-8.7	-8.5	-8.3	-7.8	-7.7	-7.2	-7.2	-7.1	-7.1	**-6.7**	-7.3	-7.2	-7.9	-8.5	-9.0	-9.4	-9.6	-9.6	**-10.2**	-8.35
30	**-10.7**	-10.5	-10.4	-10.1	-9.8	-9.3	-9.0	-9.7	-9.3	-9.0	-8.7	-8.3	-8.0	-7.8	**-7.7**	-8.3	-8.4	-8.5	-8.7	-8.8	-8.9	-9.0	-9.0	-9.5	-9.06
M.	-6.10	-6.08	-6.09	**-6.13**	-6.06	-5.94	-5.82	-5.71	-5.52	-5.33	-5.16	-4.88	**-4.77**	-4.82	-4.90	-5.01	-5.12	-5.40	-5.62	-5.75	-5.79	-5.86	-5.91	-6.03	-5.58

H = 904 m

h_t = 2.9 m

$\varphi = 69^0\ 56'$ N

$\lambda = 22^0\ 56'$ E

Mai.

Datum	1a	2a	3a	4a	5a	6a	7a	8a	9a	10a	11a	MT	1p	2p	3p	4p	5p	6p	7p	8p	9p	10p	11p	MN	Mittel
1	-9.9	**-10.2**	-9.9	-9.9	-9.6	-9.3	-9.0	-8.8	-8.8	-8.4	-8.3	-8.0	-7.4	-7.2	-7.4	-7.6	-7.9	-8.0	-7.9	-7.6	-7.4	-7.2	-7.2	**-7.2**	-8.34
2	**-7.1**	-7.0	-7.0	-7.0	-6.9	-6.6	-6.2	-5.9	-5.7	-5.2	-5.1	-5.4	-5.1	-4.8	-4.8	-4.4	-4.2	-4.0	**-3.8**	-3.8	-3.9	-4.0	-4.1	-4.3	-5.26
3	-4.6	-4.5	-4.4	-4.4	-4.3	-4.1	-4.1	-3.9	-3.5	-3.5	-3.6	-3.6	**-3.4**	-3.8	-3.9	-3.6	-3.7	-4.0	-4.3	-4.9	**-5.0**	-4.9	-4.6	-4.3	-4.12
4	-4.1	**-4.4**	-4.1	-3.7	-3.7	-3.4	-2.9	-2.4	-2.1	-1.8	-1.1	-0.6	0.0	**0.4**	0.1	0.0	-0.4	-1.0	-1.7	-2.1	-2.8	-3.3	-3.6	-4.2	-2.20
5	-4.2	-4.1	-4.1	-4.0	-4.0	-3.9	**-3.8**	-4.6	-4.6	-4.6	-5.5	-6.4	-6.3	-6.2	-6.4	-6.4	-6.7	-6.9	-6.9	**-7.2**	-7.2	-7.1	-7.0	-7.2	-5.64
6	-7.2	-7.3	-7.4	-6.8	-6.2	-6.6	-6.5	-6.1	-5.6	-5.0	-5.6	-4.6	**-4.4**	-5.4	-5.7	-5.5	-6.7	-7.1	-7.9	-8.2	-8.6	-8.6	-8.6	**-8.7**	-6.68
7	-8.7	-9.0	**-9.2**	-9.2	-8.7	-8.4	-8.7	-8.4	-7.7	-7.0	-7.6	**-6.5**	-6.5	-7.3	-7.6	-7.5	-7.8	-7.3	-7.9	-8.6	-8.8	-8.9	-9.0	-9.2	-8.15
8	**-9.5**	-9.5	-9.5	-9.5	-9.4	-8.9	-8.5	-7.5	-6.7	-6.7	-6.1	**-5.1**	-5.8	-5.5	-6.0	-6.3	-6.0	-5.9	-6.3	-6.6	-7.0	-7.0	-7.1	-7.1	-7.23
9	**-7.1**	-6.9	-6.8	-6.3	-5.3	-5.2	-3.8	-3.2	-3.1	-1.8	-1.8	-1.5	1.3	2.3	2.0	0.9	0.9	2.1	2.4	**3.2**	3.0	2.9	2.9	2.8	-1.09
10	2.2	2.8	3.0	3.4	3.7	**3.8**	3.7	3.2	3.6	3.7	3.6	3.6	2.5	1.8	1.9	2.3	2.1	1.5	0.7	0.7	0.8	1.0	1.0	**-0.5**	2.34
11	-1.1	**-1.0**	-1.4	-1.6	-1.9	-2.6	-3.0	-2.8	-2.5	-2.4	-2.4	-2.3	-2.3	-2.2	-2.3	-2.5	-2.5	-2.6	-3.0	-3.2	-3.1	-3.2	**-3.7**	-3.4	-2.46
12	**-3.1**	-2.6	-1.5	-0.7	-0.3	0.1	-0.6	**0.9**	0.0	-0.6	-0.3	-0.2	0.5	-0.2	-0.1	-0.1	-0.8	-0.8	-1.1	-1.5	-0.2	-0.8	-0.5	-0.7	-0.63
13	**-0.7**	-0.7	-0.6	-0.4	-0.1	0.7	0.8	0.7	1.7	1.9	1.3	0.8	**2.5**	1.8	1.1	1.2	0.9	1.0	1.1	0.9	0.2	0.1	0.1	0.0	0.68
14	-0.2	-0.1	0.1	0.1	0.3	0.5	1.4	1.3	1.5	1.5	1.9	1.8	2.0	**2.5**	2.4	2.2	1.5	1.1	0.7	0.2	-0.4	-0.9	**-1.3**	-1.2	0.79
15	-1.2	**-1.7**	-1.6	-1.3	-0.9	-0.5	-0.3	-0.2	0.7	0.8	1.2	2.2	**2.7**	2.7	2.4	1.5	0.9	0.7	0.5	0.3	0.0	-0.1	-0.3	-0.6	0.33
16	-0.3	-0.4	-0.6	-0.6	-0.7	0.1	0.4	0.6	0.6	**1.4**	1.4	1.1	1.3	1.2	1.0	0.7	0.1	0.7	-0.2	-0.6	-0.9	**-1.0**	-0.9	-1.0	0.14
17	**-0.9**	-0.9	-0.8	-0.6	-0.3	0.0	1.0	1.3	2.0	1.5	2.0	2.3	2.4	2.5	2.9	3.5	3.8	3.8	3.8	3.6	4.1	4.3	**5.9**	5.1	2.18
18	7.1	5.1	6.2	7.4	**8.5**	8.4	7.8	8.3	6.6	6.3	5.0	3.8	4.5	4.5	3.8	2.7	1.6	0.6	0.1	0.0	-0.1	-0.4	-0.8	**-1.3**	3.99
19	**-1.6**	-1.7	-2.2	-2.4	-2.4	-2.3	-2.2	-2.1	-2.1	-2.0	-1.9	-1.9	-1.9	-2.0	-2.5	-2.8	-3.4	-3.6	-3.6	-3.6	-3.9	**-4.1**	-4.1	-4.0	-2.68
20	-4.2	-4.3	-4.5	-4.5	-4.4	-4.2	-3.9	-3.9	**-3.5**	-4.2	-4.2	-4.3	-4.3	-4.1	-4.2	-4.4	-4.7	-5.3	-5.1	-5.2	-5.7	**-5.8**	-5.7	-5.6	-4.59
21	-5.7	-5.3	-5.2	-5.0	-5.0	-4.7	-4.6	-4.5	**-4.1**	-4.4	-5.1	-5.7	-5.9	-6.4	-6.5	-6.6	-6.7	-7.3	-7.5	-7.4	-7.6	**-8.0**	-8.0	-7.9	-6.05
22	-7.9	-8.8	-8.9	-8.9	**-9.3**	-8.7	-8.4	-7.8	-7.8	-7.8	-7.7	-7.8	**-7.1**	-7.3	-7.7	-8.1	-8.0	-8.2	-8.2	-8.3	-8.6	-8.5	-8.5	-8.7	-8.21
23	**-8.9**	-8.5	-8.7	-8.6	-8.2	-8.0	-7.8	-7.8	-7.5	-7.3	-6.7	**-6.3**	-6.4	-6.4	-6.9	-6.7	-7.2	-7.3	-7.9	-8.0	-8.1	-8.1	-8.1	-8.4	-7.66
24	-8.3	-8.3	**-8.4**	-8.4	-8.0	-8.0	-7.7	-7.5	-7.3	-6.6	**-5.1**	-5.6	-5.8	-5.6	-5.6	-6.0	-6.1	-6.4	-6.1	-7.1	-7.1	-7.6	-7.7	-7.0	-6.97
25	-7.4	**-7.6**	-6.9	-6.5	-5.8	-5.7	-5.0	-4.6	-4.7	-3.8	-3.7	-3.8	**-2.5**	-2.5	-3.9	-3.9	-4.3	-4.4	-4.7	-5.1	-5.2	-5.3	-5.7	-5.7	-4.95
26	-5.7	-5.8	-6.2	-5.6	-5.4	-4.7	-4.8	-4.2	-3.8	-3.1	**-1.9**	-2.0	-3.8	-2.4	-3.1	-4.0	-4.5	-5.6	-5.9	-6.2	-7.0	**-7.3**	-7.0	-7.1	-4.88
27	**-7.6**	-7.5	-6.6	-6.7	-7.0	-6.3	-6.2	-6.1	-5.9	-5.1	-4.9	-4.5	-4.3	**-3.2**	-3.2	-3.3	-3.4	-3.5	-3.6	-3.8	-3.5	-3.6	-3.7	-3.6	-4.88
28	**-3.7**	-3.7	-3.7	-3.2	-1.5	-0.7	0.1	1.5	2.4	2.8	3.4	3.1	3.0	2.6	2.5	2.8	2.8	3.3	**3.4**	3.1	3.1	3.3	3.4	3.4	1.40
29	3.3	3.6	3.6	2.5	2.0	**1.8**	1.8	3.7	3.8	5.2	5.7	5.7	6.6	**7.5**	7.1	6.4	6.5	6.5	6.5	6.1	6.1	6.0	6.4	6.5	5.04
30	**6.6**	6.7	6.8	6.7	7.6	7.8	6.8	7.8	8.0	8.5	8.3	9.0	8.8	8.8	9.5	9.5	**9.6**	9.1	8.9	8.4	8.1	8.0	7.9	7.0	8.09
31	6.9	6.0	5.2	5.1	5.2	**4.7**	5.0	5.3	5.6	6.2	6.6	7.0	8.1	**8.2**	7.9	7.6	7.2	7.2	6.4	6.3	6.0	6.0	5.9	5.6	6.30
M.	-3.38	**-3.47**	-3.40	-3.25	-2.97	-2.74	-2.55	-2.18	-1.95	-1.66	-1.55	-1.47	-1.19	**-1.15**	-1.39	-1.56	-1.84	-1.99	-2.23	-2.46	-2.60	-2.71	-2.70	-2.87	-2.30

Juni.

Datum	1a	2a	3a	4a	5a	6a	7a	8a	9a	10a	11a	MT	1p	2p	3p	4p	5p	6p	7p	8p	9p	10p	11p	MN	Mittel
1	5.3	4.8	4.8	4.9	5.4	5.6	5.0	5.0	5.6	5.9	6.7	6.5	7.3	**8.0**	7.7	7.3	6.0	5.6	5.0	3.9	3.2	3.0	**2.2**	2.2	5.29
2	2.1	1.8	1.8	1.7	1.7	1.8	1.9	2.4	3.1	3.9	4.5	4.6	5.0	**5.8**	5.3	4.8	4.2	3.0	2.1	1.8	1.8	1.8	1.7	**1.5**	2.92
3	**1.3**	1.3	1.5	1.7	2.0	2.6	2.7	2.9	3.1	3.4	3.8	4.2	4.3	**4.6**	4.2	4.0	3.7	3.3	3.1	2.7	2.4	2.6	2.6	2.7	2.95
4	2.6	2.8	3.0	3.1	3.6	**3.9**	3.9	3.6	3.6	3.5	3.4	3.8	3.7	3.4	3.7	3.3	2.5	2.0	1.7	0.8	0.1	**-0.2**	-0.2	0.0	2.57
5	-0.4	-0.4	**-0.5**	-0.5	-0.3	-0.1	0.5	0.6	0.9	1.1	1.2	1.3	1.6	1.8	1.9	**2.1**	1.6	1.6	1.5	1.6	1.2	0.9	0.6	0.7	0.85
6	**0.9**	1.1	2.1	2.3	3.0	3.9	4.7	4.6	4.8	5.5	5.9	6.4	**7.2**	7.2	7.1	6.3	6.2	5.7	5.2	5.5	5.4	4.9	4.8	4.7	4.81
7	4.4	4.4	5.0	4.6	4.9	5.3	5.4	5.5	6.3	6.3	6.5	7.8	8.0	**8.1**	8.0	7.2	6.3	5.4	5.3	5.2	4.3	2.4	1.5	**1.3**	5.39
8	1.4	**0.9**	1.4	1.0	1.6	1.8	1.9	2.8	2.7	2.8	2.6	2.4	2.4	2.8	2.8	**3.2**	2.8	2.6	2.7	2.7	2.6	2.6	2.9	2.5	2.33
9	2.7	2.8	2.8	2.8	2.6	2.3	2.3	**2.2**	2.3	2.3	2.4	2.5	2.8	**3.0**	2.9	2.8	2.6	2.8	2.6	2.5	2.3	2.2	2.2	2.2	2.54
10	2.1	2.0	**1.8**	1.8	1.9	2.2	2.3	2.7	2.6	2.6	2.5	2.5	2.5	2.6	2.7	2.8	2.8	**3.0**	3.0	2.7	2.6	2.5	2.3	1.9	2.43
11	2.0	1.9	2.3	2.6	3.8	3.6	2.8	3.2	3.4	3.4	3.8	4.5	5.1	**6.0**	5.1	3.9	2.9	2.7	2.8	2.5	2.4	2.3	2.1	**1.8**	3.20
12	**0.6**	1.0	1.2	0.9	1.0	1.5	1.8	2.5	2.5	1.9	**2.5**	2.5	2.5	2.4	2.4	2.4	2.3	1.5	0.8	1.1	0.8	1.1	0.7	0.8	1.61
13	**0.6**	0.8	1.2	1.2	0.7	1.5	1.5	1.8	2.5	2.8	3.7	5.0	**5.6**	5.5	5.2	5.6	5.1	3.7	3.5	3.6	2.8	2.7	1.9	1.6	2.92
14	1.1	1.0	**0.7**	1.0	2.0	3.4	3.7	4.2	4.5	4.9	5.1	5.5	5.7	5.9	5.8	**6.1**	6.1	5.5	5.2	4.9	5.1	4.3	3.5	3.1	4.10
15	2.9	**2.8**	3.1	3.2	3.6	4.1	5.1	5.1	5.3	5.7	5.9	6.3	6.1	**6.6**	6.5	5.7	5.2	5.5	4.5	4.5	4.8	4.5	4.3	4.5	4.82
16	3.5	4.0	3.5	3.5	3.4	3.5	4.0	3.8	3.8	**4.2**	4.2	3.6	**3.2**	3.5	3.7	3.9	4.1	4.0	3.9	4.0	4.0	3.2	3.5	3.3	3.72
17	3.2	3.3	3.4	3.4	3.3	3.2	2.8	2.8	2.4	2.5	2.8	2.9	3.2	**3.5**	3.3	3.4	3.4	3.3	3.2	3.1	2.8	2.6	1.5	**1.4**	2.95
18	1.4	1.4	1.4	**0.6**	0.6	0.6	0.9	1.4	1.7	2.5	3.0	3.8	4.0	**4.8**	4.7	4.7	4.4	4.0	3.5	2.8	2.7	2.4	2.9	2.3	2.60
19	2.0	1.5	1.6	1.8	2.6	3.1	4.3	5.2	5.6	5.7	6.5	**6.6**	6.3	6.0	5.8	5.8	5.4	5.1	4.7	4.5	4.1	3.6	2.8	2.3	4.29
20	2.3	2.2	1.4	1.3	1.7	0.9	1.7	1.9	2.2	3.6	4.4	4.9	5.5	**6.0**	5.8	5.6	4.9	4.5	4.1	4.1	3.3	2.3	1.4	**0.7**	3.20
21	0.0	-0.2	0.5	**-0.4**	0.3	0.6	1.3	2.5	2.9	3.8	4.3	4.3	5.0	**5.1**	4.8	4.8	4.5	4.3	4.0	3.8	3.6	3.5	2.7	1.8	2.82
22	**1.4**	2.0	2.2	2.6	3.4	4.1	5.6	6.3	7.7	8.2	9.3	10.0	10.6	10.6	10.6	**11.0**	10.3	10.0	9.7	9.0	9.0	8.9	8.3	7.6	7.44
23	7.8	7.4	8.1	9.3	9.7	10.4	11.1	11.2	10.9	11.5	11.2	**11.8**	10.7	10.6	9.6	8.6	7.3	6.5	5.9	5.1	4.9	5.1	**4.5**	4.6	8.49
24	**4.3**	4.0	4.1	4.0	4.1	3.3	3.6	3.5	3.3	3.2	3.4	3.8	3.5	3.4	3.4	3.2	2.9	3.0	2.4	2.3	2.1	2.1	2.2	**2.1**	3.22
25	**2.2**	2.4	2.4	2.3	2.7	3.1	3.6	4.1	4.2	3.5	3.4	3.3	3.3	3.1	3.1	3.2	3.3	3.2	3.2	3.3	3.7	4.1	3.8	**4.4**	3.29
26	4.1	4.2	5.2	5.1	4.7	4.4	4.6	4.6	5.0	6.0	5.7	6.3	6.6	6.6	**6.8**	5.5	5.5	5.3	5.4	5.5	4.6	4.3	3.5	**2.5**	5.08
27	1.4	0.6	0.4	0.5	0.4	0.7	0.7	0.6	0.6	0.7	1.2	1.3	**1.4**	1.1	1.1	1.2	0.9	0.8	0.6	0.5	0.4	0.4	**0.3**	0.3	0.75
28	0.4	0.4	0.4	0.4	0.4	0.4	0.6	0.5	0.7	1.5	1.7	1.7	1.8	**2.0**	2.0	1.8	1.8	1.5	1.1	0.8	0.6	0.6	0.5	**0.4**	1.00
29	0.1	**0.0**	0.2	0.3	0.3	0.3	0.4	0.4	1.4	1.5	1.8	1.8	2.2	**2.3**	2.1	1.5	2.1	2.1	1.9	2.0	2.2	2.2	2.2	2.0	1.39
30	2.6	**2.5**	2.8	3.0	3.2	4.1	4.9	5.5	7.0	6.4	6.6	7.3	**7.6**	7.4	7.1	7.1	6.8	6.7	7.0	7.0	6.5	5.9	5.9	5.9	5.70
M.	2.21	**2.16**	2.33	2.33	2.61	2.87	3.19	3.45	3.75	4.03	4.33	4.64	4.82	**4.99**	4.84	4.63	4.26	3.94	3.65	3.46	3.21	2.96	2.64	2.44	3.49

H = 904 m
h_t = 2.9 m

φ = 69° 56′ N
λ = 22° 56′ E

Juli.

Datum	1a	2a	3a	4a	5a	6a	7a	8a	9a	10a	11a	MT	1p	2p	3p	4p	5p	6p	7p	8p	9p	10p	11p	MN	Mittel
1	5.9	6.6	7.0	9.0	8.9	9.8	10.7	10.9	11.6	12.9	12.4	12.9	14.2	13.8	13.5	13.2	12.8	12.6	12.4	12.2	11.9	10.7	10.4	10.7	11.12
2	11.4	11.2	11.8	12.8	13.1	13.8	14.9	16.5	16.8	17.1	17.2	16.8	17.6	17.5	17.3	16.6	16.4	15.8	15.7	15.1	15.0	14.9	14.4	14.1	15.17
3	14.0	14.1	14.5	14.4	15.1	15.2	15.1	15.4	16.9	16.8	15.1	16.0	13.9	13.8	14.5	12.9	12.8	12.9	11.9	11.3	10.2	8.3	7.9	8.3	13.39
4	9.0	9.9	9.4	8.3	8.4	8.6	8.5	9.6	8.9	10.7	11.7	12.6	14.5	14.3	14.3	14.3	14.2	14.1	14.0	13.9	13.3	13.1	12.1	11.9	11.65
5	11.2	12.0	12.9	14.8	15.3	15.7	16.2	16.0	17.2	18.2	19.5	20.8	21.6	21.7	21.6	21.1	20.8	20.3	19.2	18.9	18.4	18.1	17.8	18.1	17.81
6	18.2	18.8	18.8	19.0	19.2	19.6	20.0	20.8	21.3	21.0	20.9	20.0	19.1	19.0	18.1	17.5	18.0	17.4	17.0	16.4	15.9	15.3	15.1	15.2	18.40
7	15.1	14.7	14.9	14.6	15.2	15.1	15.0	15.4	15.6	15.5	15.4	15.6	16.4	16.4	16.5	16.2	15.3	14.9	14.8	13.7	13.9	14.8	14.8	15.0	15.20
8	14.3	14.0	13.2	12.1	11.4	11.7	12.0	12.0	11.8	12.3	12.5	12.0	12.7	12.8	12.7	13.2	13.2	13.2	13.1	12.6	12.4	12.9	13.2	12.6	12.66
9	13.5	13.5	13.4	15.3	13.9	15.6	16.8	17.2	18.9	20.6	20.8	21.6	21.5	21.6	16.1	18.2	18.7	18.0	16.2	16.6	15.6	15.0	15.7	14.8	17.05
10	14.8	15.0	14.9	15.2	16.2	17.1	17.9	18.4	18.8	19.9	20.2	21.0	21.7	21.2	19.7	19.5	19.1	17.8	17.5	17.3	14.5	14.4	13.4	13.3	17.45
11	12.4	12.8	13.1	13.2	12.8	13.1	12.9	13.0	13.2	13.8	15.2	16.2	16.3	16.0	15.1	14.3	14.1	13.7	12.9	12.0	11.3	9.9	9.0	7.6	13.08
12	7.0	5.8	5.3	5.2	4.9	4.4	4.4	4.6	4.6	4.8	4.8	5.1	5.5	5.4	4.9	4.6	4.3	4.4	4.4	4.3	4.3	3.9	3.5	4.3	4.78
13	4.1	4.3	4.6	4.9	5.2	5.8	6.5	7.0	8.3	9.3	8.4	8.5	7.5	7.0	6.3	5.8	5.9	6.0	6.2	5.4	5.3	5.1	4.8	4.8	6.12
14	4.8	4.8	4.8	5.0	5.3	6.0	5.6	5.8	6.1	6.3	7.4	7.8	8.5	7.7	7.6	7.6	7.6	7.7	7.7	7.6	7.6	7.6	7.4	6.7	6.71
15	7.7	7.7	7.8	8.5	8.9	9.5	10.4	11.3	13.0	13.3	14.2	15.3	15.7	15.6	14.9	15.3	14.5	13.9	12.1	11.9	12.0	11.8	11.3	11.0	11.99
16	11.4	10.8	11.4	11.7	12.1	13.0	13.0	13.7	15.3	16.1	16.5	16.8	17.1	15.8	15.3	15.5	14.8	14.4	14.4	13.9	13.7	13.0	12.5	12.5	13.95
17	12.3	12.2	12.4	12.7	13.5	13.6	13.9	14.9	15.6	16.4	16.0	17.0	17.9	17.8	17.2	16.6	16.3	15.3	15.0	15.0	14.9	14.4	14.3	13.7	14.95
18	13.6	14.0	14.1	14.4	14.8	15.1	15.7	16.1	16.9	17.5	17.5	17.1	16.9	16.2	15.8	15.2	14.0	14.7	14.6	14.4	13.6	13.2	12.9	12.9	15.05
19	12.8	13.2	13.7	10.1	11.6	11.1	11.5	11.8	12.8	11.4	11.5	11.6	11.7	10.7	9.4	8.3	8.1	7.6	7.3	7.3	6.8	6.8	6.6	6.6	10.01
20	6.5	6.3	6.4	6.7	7.0	7.3	7.7	8.8	9.7	10.7	11.8	12.0	12.6	14.0	14.5	14.7	14.7	14.4	13.8	13.5	13.3	12.7	12.6	12.3	11.00
21	11.7	11.6	12.1	12.5	12.8	13.2	13.9	14.3	14.9	16.7	16.6	17.7	18.7	18.8	17.6	16.5	15.1	14.4	13.7	12.9	12.8	12.4	12.3	13.1	14.85
22	13.3	13.0	13.2	13.3	13.7	14.3	14.0	13.7	14.2	14.0	14.6	15.2	16.4	16.4	16.2	16.2	16.1	15.3	14.8	14.2	13.8	13.3	13.5	12.8	14.40
23	12.3	12.3	12.4	12.9	13.5	14.4	13.7	13.8	14.5	15.6	16.3	16.0	15.9	16.0	15.9	15.0	13.6	11.9	11.8	12.0	10.1	9.9	9.2	8.5	13.23
24	8.8	7.9	6.6	5.7	6.7	6.2	7.2	7.0	7.4	7.5	8.5	7.6	6.7	6.3	7.0	5.2	4.9	3.1	2.7	2.2	1.8	1.6	1.3	1.0	5.45
25	0.8	1.0	0.7	0.7	0.6	1.1	1.2	0.9	1.7	2.1	2.9	3.4	4.0	5.1	4.9	4.0	3.7	3.4	2.3	2.1	2.0	1.8	1.6	1.4	2.22
26	1.3	1.5	1.7	1.8	1.7	2.9	3.7	4.8	6.9	7.9	9.4	10.6	11.9	12.9	13.3	12.9	13.2	13.7	13.6	13.6	13.6	13.6	13.0	12.5	8.83
27	12.7	12.7	12.6	13.2	13.2	13.5	10.0	9.6	9.0	8.8	8.0	7.3	6.3	5.8	5.9	5.0	5.0	4.8	4.8	4.4	4.3	4.7	4.3	4.2	7.50
28	4.4	4.3	4.3	4.4	4.5	4.8	5.6	5.8	6.3	6.1	5.9	5.8	5.5	4.6	4.2	3.5	3.2	2.5	2.2	2.1	1.8	1.4	1.2	1.2	3.98
29	1.0	1.1	0.4	0.6	0.9	1.0	1.0	1.2	1.3	1.3	1.3	1.4	1.6	1.9	2.0	2.1	2.2	2.2	2.2	2.2	2.1	1.6	1.6	1.4	1.48
30	1.2	0.9	0.9	0.6	0.5	0.6	1.0	1.3	1.6	2.4	2.8	3.3	3.5	3.9	4.3	4.5	4.8	5.2	5.3	5.4	5.4	5.4	5.5	5.6	3.16
31	5.6	5.6	5.7	6.0	6.6	7.0	7.7	8.3	9.0	9.0	10.1	10.0	10.1	10.7	10.7	10.7	10.5	10.1	10.0	9.9	9.8	9.5	9.2	9.1	8.79
M.	9.45	9.47	9.52	9.66	9.92	10.33	10.57	10.96	11.62	12.13	12.43	12.74	13.02	12.93	12.49	12.14	11.87	11.47	11.08	10.78	10.37	10.04	9.76	9.59	11.01

August.

Datum	1a	2a	3a	4a	5a	6a	7a	8a	9a	10a	11a	MT	1p	2p	3p	4p	5p	6p	7p	8p	9p	10p	11p	MN	Mittel
1	9.1	8.9	8.5	8.5	8.8	8.7	8.7	8.6	8.7	9.0	8.8	8.6	8.7	9.0	8.9	9.0	8.6	8.1	7.0	7.0	6.1	6.1	5.6	5.5	8.10
2	5.2	5.1	4.5	4.5	4.4	4.4	4.0	4.2	4.5	4.4	3.9	3.8	3.8	3.9	3.7	3.6	3.5	3.1	2.9	2.5	2.2	1.5	1.0	0.6	3.55
3	0.1	0.1	0.0	0.1	-0.1	0.0	0.0	0.0	0.3	1.3	1.5	2.0	2.6	2.9	2.9	2.7	2.8	2.6	2.3	2.5	2.7	2.4	2.2	2.0	1.50
4	1.5	1.4	1.6	1.6	1.6	1.5	1.7	1.8	1.9	2.2	2.5	3.0	3.5	3.8	4.1	3.9	3.8	3.9	3.9	3.8	3.4	3.5	3.7	3.8	2.81
5	3.9	4.0	4.1	4.2	4.3	4.5	4.9	5.4	5.5	6.0	6.1	6.4	6.4	6.6	6.9	6.9	6.9	7.0	6.9	6.7	6.6	6.5	6.4	6.3	5.81
6	6.1	6.1	6.0	6.3	6.4	6.8	7.0	7.0	7.1	7.2	7.3	7.3	7.4	7.6	7.4	7.5	7.1	6.7	6.0	5.6	5.3	5.0	4.7	4.4	6.47
7	4.1	3.5	3.3	4.1	5.2	5.7	7.8	8.3	8.6	8.8	9.5	9.5	10.0	9.9	8.9	8.7	8.8	8.2	7.8	7.0	7.1	6.5	6.9	7.7	7.33
8	8.2	8.0	8.0	8.3	8.6	9.5	10.0	10.5	11.5	11.8	12.2	11.8	11.9	11.4	10.9	10.4	9.8	9.3	8.7	8.4	8.1	7.5	6.7	6.2	9.49
9	5.8	5.4	4.9	5.0	5.1	5.8	6.5	7.0	7.2	7.6	9.2	10.6	10.8	11.8	10.7	10.1	10.0	9.9	9.7	9.5	9.5	9.4	8.8	9.5	8.32
10	10.6	11.2	11.5	12.4	12.3	12.7	12.8	13.6	14.3	14.6	15.4	15.8	15.4	16.0	15.7	15.4	14.7	13.8	12.5	12.0	11.1	10.6	10.6	9.7	13.11
11	9.4	8.6	8.4	9.1	9.0	9.3	9.4	9.6	9.5	9.4	9.3	9.3	9.4	9.5	9.6	9.5	8.9	9.2	8.7	8.2	8.2	7.9	7.4	7.1	8.91
12	7.0	6.7	6.6	6.6	6.9	7.7	7.8	8.7	10.0	10.8	11.7	12.3	12.6	12.7	12.4	11.2	10.0	9.3	8.5	8.3	8.2	7.8	7.6	7.8	9.13
13	7.4	6.4	6.2	6.2	5.8	6.7	7.0	7.6	7.2	7.4	8.0	9.3	10.2	9.8	10.6	9.2	8.9	8.2	8.8	8.5	8.2	8.4	8.2	8.3	8.02
14	8.3	8.1	8.4	8.9	8.9	9.0	9.0	9.0	9.1	9.1	8.9	8.9	9.3	9.6	9.3	8.9	8.8	8.5	8.0	7.8	7.4	7.2	6.5	6.2	8.46
15	5.9	5.7	5.3	5.2	5.1	4.9	4.7	4.6	4.6	4.7	4.9	5.0	5.5	5.8	6.0	5.9	5.8	5.8	5.9	5.8	5.8	5.6	5.9	5.5	5.41
16	5.6	5.5	5.2	6.0	5.8	6.6	6.1	6.4	6.2	6.7	7.3	7.3	7.4	7.7	7.6	7.7	7.6	7.5	7.2	8.1	8.6	8.3	7.9	7.3	6.98
17	6.6	6.2	6.4	6.4	6.8	6.0	6.3	6.0	6.5	6.6	6.6	7.0	7.0	7.0	7.3	7.5	8.0	9.0	9.2	9.2	9.5	8.8	7.7	7.6	7.30
18	7.8	7.9	7.7	7.7	7.4	7.4	7.3	7.0	6.7	6.5	6.6	6.6	6.3	5.7	5.5	5.6	4.7	4.6	4.6	4.3	4.2	4.1	4.0	3.7	6,00
19	3.5	2.8	2.7	2.7	2.7	2.7	2.9	2.7	2.6	2.7	2.6	2.8	2.7	3.0	2.8	2.3	2.1	1.7	1.5	1.2	1.2	0.8	0.8	0.8	2.26
20	0.6	0.4	-0.1	-0.3	-0.4	0.1	-0.1	0.2	0.3	0.4	0.8	1.2	2.0	2.0	1.8	1.8	1.9	1.4	1.0	0.7	0.4	0.3	0.1	-0.2	0.68
21	-0.6	-0.8	-1.6	-1.6	-1.9	-1.9	-1.9	-1.5	-0.9	0.1	0.7	1.3	2.3	3.0	3.1	3.1	3.1	3.0	2.8	2.5	2.2	1.7	1.4	1.5	0.80
22	1.7	2.8	3.2	3.7	4.3	6.1	6.5	7.8	7.4	7.7	7.9	8.8	9.2	8.7	9.1	9.6	9.8	10.0	10.7	9.8	9.4	9.1	9.5	9.1	7.58
23	9.3	9.0	9.0	8.9	9.1	10.1	10.7	10.8	11.8	11.7	12.0	12.5	12.7	13.0	12.7	12.3	11.8	11.4	11.1	10.6	10.2	10.6	11.0	10.7	10.96
24	10.7	10.8	10.8	10.7	11.2	11.0	12.0	12.4	13.3	12.4	13.2	13.1	13.1	13.6	13.4	13.5	12.9	12.2	12.0	11.3	11.1	11.5	11.5	11.5	12.05
25	11.6	11.4	11.5	11.5	11.6	11.7	11.7	12.1	13.6	14.2	14.6	14.5	14.1	14.3	13.5	12.9	13.2	12.9	12.5	12.2	11.8	12.1	12.2	12.3	12.67
26	12.9	13.2	13.2	13.3	13.5	13.7	14.8	15.4	14.5	14.7	14.9	15.3	15.2	14.9	14.6	14.1	13.5	12.7	12.3	11.9	11.4	11.1	11.0	10.9	13.46
27	10.5	10.1	10.1	10.0	10.1	10.1	11.0	11.1	11.6	12.2	12.7	13.1	13.2	13.0	12.9	12.5	12.1	11.4	10.9	10.0	9.4	8.7	8.7	8.9	11.01
28	8.8	8.8	9.1	8.5	8.6	8.7	8.8	9.5	10.1	10.6	12.0	11.7	12.2	12.1	12.0	11.6	11.4	11.0	10.7	9.5	8.7	8.3	8.0	7.8	9.94
29	7.6	7.3	7.3	7.5	7.4	7.2	7.9	9.0	9.0	9.6	10.3	9.9	10.0	10.1	10.0	10.0	9.1	8.7	7.6	7.3	6.9	7.0	6.5	6.6	8.33
30	6.3	5.9	6.0	6.1	6.2	6.7	6.2	5.9	6.7	7.5	7.9	8.6	9.2	9.7	9.2	8.8	8.0	7.5	7.3	7.0	7.6	7.7	7.6	7.6	7.38
31	7.7	7.6	7.7	7.6	7.7	7.9	8.9	9.3	9.5	9.8	10.0	10.0	9.8	9.8	9.3	9.2	9.0	8.4	7.6	7.3	7.0	6.6	6.3	6.0	8.33
M.	6.55	6.39	6.31	6.44	6.53	6.82	7.11	7.42	7.71	7.99	8.36	8.62	8.84	8.96	8.80	8.56	8.28	7.97	7.63	7.31	7.08	6.86	6.66	6.54	7.49

H = 904 m
h_t = 2.9 m

φ = 69° 56′ N
λ = 22° 56′ E

September.

Datum	1a	2a	3a	4a	5a	6a	7a	8a	9a	10a	11a	MT	1p	2p	3p	4p	5p	6p	7p	8p	9p	10p	11p	MN	Mittel
1	5.7	5.8	5.9	5.9	5.9	5.8	5.6	5.5	5.5	5.4	5.6	5.3	5.3	4.8	4.9	4.8	4.5	4.2	3.9	3.6	3.7	3.3	3.4	3.5	4.91
2	4.0	3.7	3.5	4.3	4.3	4.4	4.0	4.2	4.8	5.5	5.9	6.1	6.3	6.2	6.6	6.8	6.7	6.8	7.0	7.1	7.1	6.2	5.7	4.8	5.50
3	4.4	3.6	3.1	2.9	2.6	2.9	3.3	3.9	3.8	3.9	3.7	4.3	5.1	5.6	5.4	5.5	5.5	5.5	5.4	5.4	4.9	4.5	4.3	4.3	4.32
4	4.3	4.2	4.1	4.0	4.0	4.0	4.0	4.0	4.4	4.6	5.0	5.3	5.3	5.3	5.4	5.4	5.3	5.3	5.0	4.7	4.2	4.1	3.8	3.7	4.56
5	3.7	3.7	3.8	4.1	4.4	4.5	4.7	4.4	4.5	4.8	5.0	5.3	5.4	5.8	5.3	4.8	4.3	4.2	4.2	4.1	4.0	3.9	4.1	3.8	4.45
6	3.8	3.8	3.9	4.0	4.2	4.3	4.3	4.3	4.4	4.6	4.9	5.0	5.2	5.2	5.3	5.0	4.8	4.5	4.6	4.4	4.4	4.5	4.2	4.1	4.49
7	4.1	4.1	4.0	3.9	3.8	3.8	3.8	3.8	3.9	4.1	4.2	4.4	4.6	4.9	4.7	4.5	4.4	4.4	4.3	4.3	3.7	3.5	3.4	3.4	4.08
8	3.4	3.4	3.3	3.3	3.3	3.3	3.2	3.2	3.3	3.4	3.6	3.8	3.9	3.9	4.0	3.8	3.3	3.3	3.3	3.4	3.3	3.2	3.3	3.2	3.43
9	3.1	3.1	3.1	3.2	3.3	3.4	3.3	3.9	3.8	3.7	3.8	3.7	3.6	3.4	3.4	3.2	2.8	2.7	2.6	2.1	2.1	2.1	2.0	2.2	3.07
10	2.0	1.4	1.5	1.7	1.7	1.5	1.5	1.6	1.6	1.7	1.6	1.8	2.4	2.1	2.2	1.5	1.6	1.4	1.3	0.9	0.3	0.3	0.4	0.5	1.44
11	0.7	0.8	0.8	0.9	1.2	1.5	2.3	3.1	3.4	4.5	5.2	5.2	5.1	5.2	4.6	4.6	3.9	3.4	3.2	3.0	2.7	2.5	2.4	2.4	3.02
12	2.3	2.0	2.0	1.9	2.1	2.4	2.6	2.8	3.7	3.9	4.9	5.5	5.3	4.8	4.4	4.4	4.2	3.8	3.4	3.2	3.0	3.0	2.9	3.0	3.40
13	3.1	3.3	3.1	3.1	3.2	3.1	3.4	3.4	3.2	3.3	3.4	3.5	3.2	3.7	3.3	2.8	2.8	2.6	2.3	2.0	1.8	1.8	1.9	2.0	2.89
14	2.1	2.0	2.2	2.4	2.5	3.3	3.1	3.2	3.1	3.2	3.3	3.0	2.8	3.0	3.5	3.8	4.3	4.8	5.2	5.3	5.2	5.3	5.3	5.2	3.63
15	5.4	5.3	5.3	5.1	5.1	5.2	5.2	5.4	5.5	5.6	5.7	5.8	5.8	5.9	5.9	5.9	5.8	5.0	3.9	3.4	2.8	2.7	2.6	2.3	4.86
16	2.0	1.8	1.7	1.7	1.6	1.4	1.4	1.3	1.4	1.5	1.4	1.6	1.7	1.8	1.2	0.5	0.3	-0.3	-0.7	-0.7	-0.7	-0.8	-1.2	-1.2	0.78
17	-1.1	-1.1	-1.2	-1.2	-1.4	-1.0	-0.8	-0.3	0.4	0.3	1.0	1.3	1.7	1.6	1.4	1.2	0.5	-0.1	-0.5	-0.6	-0.6	-0.8	-0.3	0.1	-0.06
18	0.3	0.6	1.0	1.4	0.7	1.3	1.3	1.4	1.5	2.1	2.6	2.4	2.4	2.2	1.9	1.4	1.0	0.2	-0.3	-0.6	-0.8	-0.9	-1.5	-1.6	0.83
19	-1.7	-1.7	-1.7	-1.5	-1.2	-1.3	-2.3	-1.9	-2.2	-2.1	-1.6	-0.9	-0.9	-1.0	-1.0	-1.0	-1.2	-1.8	-1.8	-1.9	-2.0	-2.0	-2.4	-1.9	-1.62
20	-2.4	-1.8	-1.7	-1.7	-1.6	-1.6	-0.8	-0.5	0.2	0.5	0.9	1.2	2.0	1.6	1.6	1.3	0.7	0.0	-0.6	-1.0	-1.1	-1.4	-1.5	-1.1	-0.37
21	-1.0	-1.1	-1.8	-1.9	-1.9	-1.8	-1.4	-0.8	-0.8	-0.9	-0.7	-1.1	-1.0	-1.0	-1.4	-0.8	-0.9	-0.9	-0.9	-0.9	-1.0	-1.4	-1.2	-0.9	-1.15
22	-0.7	-0.5	-0.4	0.0	0.4	1.2	1.4	1.4	1.3	1.3	1.3	1.3	1.4	1.3	1.1	0.9	1.2	1.0	0.9	0.7	0.2	0.2	0.0	0.0	0.70
23	-0.1	0.0	0.2	0.4	0.5	0.7	1.0	1.1	1.4	1.8	1.8	1.7	1.8	2.3	2.4	2.6	2.7	2.8	3.0	2.8	2.4	2.9	3.2	3.2	1.78
24	2.5	2.8	2.2	2.9	2.0	1.3	0.9	0.6	1.1	1.8	2.4	2.8	3.1	3.1	3.1	3.0	3.0	2.8	2.8	2.6	2.6	2.6	2.8	3.0	2.41
25	3.2	3.3	3.3	3.3	3.5	3.6	3.8	4.0	4.0	4.3	5.1	6.0	5.9	5.5	5.1	4.5	4.2	4.0	4.0	3.8	3.7	3.2	3.0	2.9	4.05
26	2.9	2.9	2.9	3.0	3.1	3.1	3.0	3.0	3.3	4.0	5.3	5.3	5.3	4.7	4.5	4.3	4.2	4.0	3.4	2.9	2.8	2.9	2.6	2.1	3.56
27	1.8	1.4	1.0	0.9	0.6	0.2	0.0	0.0	0.1	-0.5	-0.6	-0.6	-0.6	-0.6	-0.8	-1.0	-1.2	-1.4	-1.5	-2.2	-2.3	-2.3	-2.8	-3.2	-0.65
28	-3.1	-3.1	-3.1	-3.7	-3.5	-3.6	-3.1	-2.7	-2.5	-2.1	-1.3	-0.9	-0.2	0.6	-0.3	-0.5	-0.4	-0.7	-1.0	-1.0	-0.9	-1.1	-1.6	-1.3	-1.71
29	-1.7	-1.5	-1.5	-1.1	-1.0	-0.8	-0.4	0.0	0.2	0.3	0.4	0.5	0.6	0.7	0.8	1.4	2.0	2.8	2.8	1.5	1.6	2.4	1.9	2.2	0.59
30	1.6	0.9	0.7	0.6	0.5	0.4	0.4	0.4	0.1	0.6	0.9	1.0	1.5	1.4	1.3	1.2	1.3	1.3	1.2	1.4	1.2	2.0	1.9	3.1	1.12
M.	1.82	1.77	1.71	1.79	1.80	1.88	1.96	2.12	2.28	2.50	2.82	2.99	3.13	3.13	2.99	2.86	2.72	2.52	2.35	2.12	1.94	1.88	1.75	1.79	2.28

Oktober.

Datum	1a	2a	3a	4a	5a	6a	7a	8a	9a	10a	11a	MT	1p	2p	3p	4p	5p	6p	7p	8p	9p	10p	11p	MN	Mittel
1	2.3	2.0	1.1	1.1	1.8	1.6	2.0	2.7	2.8	2.3	2.8	2.8	3.0	2.9	2.0	1.9	1.3	0.8	0.6	0.0	-0.7	-1.1	-1.0	-1.1	1.41
2	-1.5	-1.7	-1.2	-1.0	-1.1	-1.5	-1.7	-2.2	-2.1	-2.4	-2.7	-2.8	-2.8	-2.8	-3.7	-3.8	-4.2	-4.3	-4.8	-4.9	-5.1	-4.6	-4.3	-4.8	-3.00
3	-4.7	-4.7	-4.6	-4.2	-4.2	-3.5	-3.8	-3.0	-3.1	-3.0	-3.1	-2.5	-2.7	-2.9	-3.0	-3.4	-3.3	-3.1	-3.0	-3.1	-2.7	-3.3	-3.5	-3.4	-3.41
4	-3.4	-3.2	-3.9	-3.9	-4.2	-4.6	-5.0	-5.2	-5.0	-5.0	-4.9	-5.1	-5.2	-5.7	-5.7	-6.0	-6.3	-6.5	-6.6	-6.6	-6.5	-6.8	-6.6	-6.9	-5.37
5	-7.2	-7.0	-6.2	-5.7	-5.5	-5.4	-4.7	-4.5	-4.2	-3.8	-3.7	-3.4	-3.0	-2.9	-2.9	-3.3	-3.3	-2.9	-3.1	-3.2	-3.4	-3.3	-3.6	-3.7	-4.17
6	-4.0	-3.9	-4.0	-4.0	-4.7	-4.3	-4.2	-4.0	-3.9	-3.8	-3.7	-3.7	-3.8	-3.9	-4.0	-4.0	-4.4	-4.5	-4.4	-4.4	-4.4	-4.3	-4.6	-4.6	-4.15
7	-5.2	-4.9	-5.3	-5.0	-4.8	-4.7	-4.8	-5.1	-5.3	-5.5	-5.3	-5.3	-5.3	-5.3	-5.4	-5.5	-5.6	-5.6	-5.7	-5.7	-5.6	-5.5	-5.6	-5.6	-5.32
8	-5.6	-5.6	-5.6	-5.5	-5.5	-5.5	-5.3	-5.3	-5.1	-5.1	-5.3	-5.1	-5.0	-5.1	-5.4	-5.8	-6.3	-6.2	-6.4	-6.6	-6.6	-5.9	-5.5	-4.7	-5.58
9	-3.5	-5.1	-5.3	-5.1	-4.5	-4.1	-3.0	-3.0	-3.6	-4.2	-4.4	-5.1	-4.9	-4.9	-5.2	-5.1	-5.2	-5.1	-5.2	-5.6	-5.8	-6.4	-6.4	-7.2	-4.91
10	-7.0	-7.8	-7.8	-7.7	-7.8	-7.7	-7.2	-7.0	-6.7	-6.4	-6.5	-6.2	-5.9	-5.8	-5.8	-6.0	-6.4	-6.6	-6.8	-7.0	-6.7	-6.6	-6.8	-6.6	-6.78
11	-6.8	-6.8	-6.8	-6.7	-6.6	-6.8	-6.9	-6.9	-7.2	-7.4	-7.5	-7.8	-6.8	-6.5	-6.7	-6.8	-6.8	-6.7	-6.8	-6.7	-7.3	-7.3	-7.5	-7.6	-6.99
12	-7.0	-7.1	-7.1	-6.9	-6.7	-6.8	-6.7	-6.4	-6.6	-6.6	-6.1	-6.5	-6.7	-7.1	-7.6	-7.8	-7.9	-8.0	-8.0	-8.1	-8.0	-7.9	-8.2	-7.8	-7.23
13	-7.9	-7.8	-7.6	-7.9	-8.1	-7.5	-7.4	-7.6	-7.6	-7.4	-6.6	-6.6	-6.8	-6.7	-6.7	-6.8	-6.8	-6.6	-6.9	-6.9	-7.1	-7.2	-7.3	-7.2	-7.21
14	-7.3	-7.2	-7.2	-7.1	-7.1	-7.0	-7.0	-6.9	-6.9	-7.0	-7.0	-7.1	-7.3	-7.6	-7.8	-7.8	-7.8	-7.8	-7.8	-7.9	-7.7	-7.7	-7.8	-7.8	-7.40
15	-7.8	-7.8	-7.8	-7.7	-7.7	-7.8	-7.8	-7.7	-7.8	-7.9	-8.2	-8.7	-8.4	-8.3	-8.4	-8.5	-8.6	-8.6	-8.5	-8.3	-8.2	-8.1	-8.0	-7.9	-8.10
16	-7.3	-6.8	-6.6	-6.2	-6.0	-5.7	-5.7	-5.7	-5.7	-5.8	-5.8	-5.7	-5.9	-6.0	-6.1	-6.4	-6.7	-6.5	-6.4	-6.9	-6.7	-6.3	-6.4	-6.2	-6.23
17	-6.7	-6.8	-7.0	-7.5	-7.2	-7.3	-7.6	-7.6	-7.7	-7.7	-7.8	-7.8	-8.0	-8.8	-8.9	-8.9	-8.9	-8.9	-9.0	-9.1	-8.9	-8.9	-9.2	-9.4	-8.15
18	-8.9	-8.8	-8.7	-9.0	-9.0	-8.9	-8.6	-8.6	-7.8	-7.6	-7.6	-7.4	-7.4	-7.6	-7.8	-7.8	-7.9	-8.0	-7.8	-8.0	-8.2	-8.2	-8.3	-8.4	-8.18
19	-8.5	-8.3	-8.2	-8.2	-8.5	-8.1	-8.5	-7.2	-7.4	-7.6	-7.5	-7.5	-7.6	-7.6	-7.5	-7.4	-7.2	-6.9	-6.8	-6.8	-6.7	-6.3	-6.4	-6.9	-7.48
20	-5.3	-5.8	-5.3	-4.5	-5.1	-5.1	-5.4	-5.0	-5.2	-5.4	-5.5	-5.6	-6.3	-6.3	-6.3	-6.4	-6.5	-6.6	-6.9	-7.0	-6.9	-6.8	-6.7	-7.1	-5.96
21	-7.4	-7.1	-7.0	-7.0	-6.4	-6.4	-5.9	-5.4	-5.0	-5.3	-5.7	-5.5	-6.2	-6.7	-6.6	-6.6	-6.7	-6.5	-6.5	-6.6	-6.7	-6.5	-6.4	-6.5	-6.36
22	-6.6	-6.6	-6.3	-6.3	-6.1	-5.9	-6.7	-5.9	-5.3	-4.8	-4.4	-3.9	-4.5	-4.2	-4.0	-4.6	-4.5	-5.1	-5.2	-5.6	-6.3	-6.5	-7.2	-7.1	-5.57
23	-7.3	-7.1	-7.0	-7.3	-5.4	-4.4	-7.7	-8.3	-6.8	-6.6	-6.0	-7.4	-7.4	-7.4	-7.1	-7.2	-6.9	-6.9	-6.8	-6.8	-6.6	-6.5	-6.3	-6.2	-6.81
24	-5.9	-5.7	-5.1	-4.7	-4.4	-4.3	-4.0	-3.6	-4.0	-3.2	-1.3	-3.2	-0.2	-0.4	0.2	0.4	2.6	1.1	1.2	2.0	2.1	1.4	3.0	3.6	-1.35
25	2.3	3.7	5.6	6.2	4.7	4.6	5.5	4.7	5.0	3.8	4.5	4.1	2.7	2.5	2.0	1.1	-0.1	0.1	-0.1	-0.7	0.0	-0.1	1.2	1.5	2.70
26	1.8	1.8	2.0	2.5	2.4	2.6	2.7	2.7	2.5	2.4	2.3	2.2	1.8	0.4	-0.1	-1.2	-2.1	-1.9	-2.0	-1.9	-1.9	-2.0	-2.2	-2.3	0.52
27	-2.1	-2.7	-2.9	-2.9	-3.0	-3.3	-3.6	-3.8	-3.9	-4.1	-4.7	-4.9	-5.2	-5.5	-5.9	-6.0	-6.1	-6.2	-6.2	-6.3	-6.4	-6.5	-6.6	-6.7	-4.81
28	-6.8	-6.5	-6.6	-7.2	-7.3	-7.4	-7.4	-7.8	-7.7	-7.8	-7.8	-8.2	-8.3	-8.4	-8.5	-8.6	-8.4	-8.0	-8.4	-8.7	-8.9	-8.9	-8.9	-9.1	-7.98
29	-9.1	-9.1	-9.0	-9.0	-9.0	-9.0	-9.1	-9.2	-10.2	-10.2	-9.8	-10.0	-10.2	-10.2	-10.1	-9.2	-9.0	-9.1	-9.2	-9.2	-9.3	-9.3	-9.3	-9.3	-9.42
30	-9.2	-9.0	-9.0	-8.6	-8.5	-8.6	-9.4	-9.6	-10.3	-9.6	-9.1	-9.0	-8.9	-8.8	-9.0	-9.1	-9.2	-9.2	-9.2	-8.5	-8.3	-8.3	-8.4	-8.7	-8.98
31	-8.9	-8.6	-8.5	-8.2	-7.5	-7.2	-7.2	-7.2	-7.2	-7.2	-7.4	-7.4	-7.4	-7.2	-7.1	-7.2	-7.1	-7.4	-8.0	-8.2	-8.4	-8.4	-8.4	-8.3	-7.73
M.	-5.56	-5.55	-5.45	-5.33	-5.26	-5.16	-5.23	-5.15	-5.13	-5.16	-5.03	-5.17	-5.18	-5.32	-5.45	-5.61	-5.69	-5.73	-5.83	-5.91	-5.93	-5.94	-5.91	-5.94	-5.48

H = 904 m
h_t = 2.9 m

$\varphi = 69^0\ 56'$ N
$\lambda = 22^0\ 56'$ E

November.

Datum	1a	2a	3a	4a	5a	6a	7a	8a	9a	10a	11a	MT	1p	2p	3p	4p	5p	6p	7p	8p	9p	10p	11p	MN	Mittel
1	-8.3	-8.2	-8.1	-8.1	-8.2	**-8.3**	-8.1	-8.0	-7.9	-7.7	-7.6	-7.5	-7.4	**-7.3**	-7.3	-7.4	-7.4	-7.4	-7.4	-7.5	-7.6	-7.6	-7.7	-7.7	-7.74
2	-7.8	-7.8	-7.8	-7.9	-7.9	-7.9	-7.9	**-8.1**	-7.7	-7.4	-7.3	-7.8	-7.7	-7.6	-7.8	-7.6	-7.4	-7.0	-6.6	-6.6	-6.5	-6.6	-6.5	**-6.4**	-7.40
3	-6.4	-6.4	-6.3	-6.2	-6.1	-6.0	**-5.9**	-6.5	-6.2	-6.3	-6.2	-6.4	-6.5	-6.6	-6.6	-6.8	-6.9	-6.8	-6.9	**-7.3**	-7.2	-6.9	-6.8	-6.8	-6.54
4	-6.9	-6.9	-7.3	-7.0	-6.9	**-6.5**	-6.9	-6.6	-6.9	-7.2	-6.8	-7.0	-7.2	-6.9	-7.0	-6.9	-6.8	-6.8	-7.0	-7.0	-7.1	-7.6	-8.0	**-8.1**	-7.05
5	-8.1	-8.3	-8.2	-8.4	-8.5	-8.5	-8.7	**-8.9**	-8.9	-8.8	-8.6	-7.9	-7.6	-7.6	-7.7	-7.7	-7.6	-7.0	**-6.9**	-6.9	-7.4	-7.9	-8.0	-8.1	-8.01
6	**-8.9**	-8.9	-9.0	-9.1	-9.1	-9.1	-9.2	-9.7	-10.2	-10.2	-10.4	-10.2	-10.7	**-10.9**	-10.7	-10.1	-10.0	-9.6	-9.6	-9.9	-10.2	-10.1	-10.1	-10.2	-9.84
8	**-10.2**	-10.7	-10.9	-10.9	-10.8	-10.3	-10.2	-10.2	-10.3	-10.3	-10.8	-11.0	-11.1	**-11.3**	-11.2	-11.0	-10.6	-10.7	-10.5	-10.7	-10.7	-11.0	-11.2	-11.2	-10.74
7	-11.8	-11.6	-11.9	-12.1	-12.0	-11.8	-11.6	-11.5	-11.4	-11.3	**-11.2**	-11.2	-11.3	-11.5	-11.7	-11.8	-11.9	-12.1	**-12.2**	-12.1	-12.0	-12.0	-11.8	-11.8	-11.73
9	**-11.4**	-10.9	-10.9	-10.2	-9.8	-9.8	-9.4	-9.0	-8.1	-7.9	-7.5	-7.2	-7.2	-7.6	-7.5	-7.5	-7.0	-8.0	-7.4	-7.1	-6.7	-6.8	**-6.0**	-6.9	-8.24
10	**-7.8**	-8.6	-9.1	-9.4	-9.2	-10.6	-11.1	**-11.9**	-11.3	-10.6	-9.8	-9.8	-9.0	-9.8	-9.2	-8.6	-8.4	-7.8	-9.3	-9.1	-9.0	-9.4	-8.7	-9.5	-9.46
11	-9.2	-9.1	-9.2	-9.1	-9.4	**-9.6**	-8.7	-8.6	-9.4	-8.7	-8.8	-8.2	-7.9	-8.3	-7.9	-7.6	-7.2	-7.0	-6.8	-7.5	-6.8	-6.9	**-6.0**	-6.4	-8.10
12	**-6.0**	-4.8	-4.7	-5.2	-5.4	-5.4	-5.5	-5.5	-4.7	-4.3	-3.2	-2.6	-2.0	-1.8	-1.6	-1.6	-1.3	-1.1	-0.8	-0.6	-0.6	-0.5	**-0.5**	-0.5	-2.92
13	-0.4	-0.4	-0.5	-0.5	-0.4	-0.4	-0.4	-0.4	-0.1	-0.2	0.0	0.0	**0.1**	-0.2	-0.5	-0.7	-0.9	-0.9	-1.0	-1.2	**-1.3**	-1.1	-0.5	-0.2	-0.50
14	-0.7	-0.8	-0.2	-0.6	-0.4	-0.6	-0.9	-0.7	-0.2	**0.1**	-0.5	-0.5	-0.2	-0.1	-0.7	-0.9	-1.1	-1.4	-1.6	-2.4	-2.4	**-2.8**	-2.3	-2.3	-1.01
15	-2.3	-2.2	-2.2	-2.2	**-2.4**	-2.4	-2.1	-1.8	-1.9	-1.5	-1.5	**-1.4**	-1.6	-1.8	-2.3	-2.3	-2.1	-2.1	-2.0	-2.0	-1.9	-1.8	-1.5	-1.4	-1.95
16	**-1.4**	-1.7	-1.6	-1.7	-1.9	-2.3	-2.4	-2.4	-2.3	-2.6	-2.3	-2.6	-2.7	-3.5	-3.4	-3.4	-3.9	-3.5	-3.6	-4.0	**-4.1**	-3.8	-3.8	-2.9	-2.82
17	-2.6	**-2.0**	-3.0	-3.1	-3.4	-3.3	-3.5	-4.2	-4.3	-4.3	-4.8	-4.9	-5.4	-5.2	-5.7	-4.9	-5.0	-5.6	-5.9	-6.6	-6.5	-6.5	-6.6	**-6.9**	-4.76
18	-6.6	**-6.7**	-6.6	-6.5	-5.7	-6.0	-2.8	-4.0	-1.3	-2.7	-3.4	-2.5	-2.6	-2.8	**0.5**	0.3	-1.7	-3.4	-3.8	-3.8	-3.4	-3.3	-3.5	-3.8	-3.59
19	**-4.0**	-4.0	-4.4	-4.7	-4.8	-4.8	-5.0	-5.6	-5.6	-5.7	-5.9	-6.0	-5.8	-5.7	-5.7	-5.8	-6.5	-6.6	-6.6	-6.6	-6.8	-7.0	-7.1	**-7.2**	-5.75
20	-7.0	-6.8	-6.6	-6.5	-6.4	-6.7	-6.4	**-6.3**	-7.6	-8.1	-8.8	-9.4	-9.7	-10.0	-10.6	-10.7	-10.9	-11.0	-11.3	**-11.7**	-11.6	-11.4	-11.3	-11.5	-9.10
21	-11.7	-11.7	-11.7	-11.7	-11.6	**-11.6**	-11.6	-11.7	-11.7	-11.8	-12.0	-12.1	-12.6	-12.7	-12.7	-12.5	**-13.0**	-12.5	-12.4	-12.8	-12.9	-12.9	-12.9	-12.9	-12.24
22	**-12.7**	-12.6	-12.5	-12.0	-11.8	-11.4	-10.6	-10.2	-10.1	-10.0	-10.2	-10.2	-9.9	-9.8	-9.7	-8.9	-8.9	-8.6	-8.1	-7.8	-7.7	**-7.6**	-7.7	-7.7	-9.86
23	**-7.8**	-8.8	-8.8	-8.9	-8.9	-9.3	-9.1	-9.0	-9.4	-9.2	-9.9	-10.1	-10.3	-10.6	-11.0	-11.3	-11.5	-11.2	-11.5	-11.5	-11.9	-12.0	-12.1	**-12.2**	-10.26
24	**-12.3**	-12.5	-12.5	-12.7	-12.9	-12.6	-12.8	-12.9	-12.9	-13.1	-12.8	-12.4	-13.1	-15.3	**-15.4**	-14.9	-14.6	-14.1	-14.9	-15.1	-14.5	-14.2	-14.2	-14.5	-13.63
25	-15.8	-16.4	**-16.5**	-16.4	-15.6	-15.4	-15.5	-16.2	-16.3	-15.5	-15.2	-15.1	-14.9	-14.9	-15.1	-15.2	-14.8	-14.6	-15.2	-15.8	-14.4	-13.8	-12.4	**-11.9**	-15.12
26	-11.8	-11.9	-11.8	-11.1	-11.7	-10.6	-10.8	-10.8	-11.1	-11.1	-10.7	-11.3	-11.0	-10.6	-10.9	-11.5	-11.4	-10.7	-10.4	-11.6	-10.7	-11.6	-11.2	-11.0	-11.14
27	**-10.8**	-10.8	-11.3	-11.9	-10.9	-11.3	-12.9	-14.7	-14.8	-14.9	-14.6	-14.9	-14.6	-14.7	-14.8	-14.4	-14.2	-13.7	-14.2	-15.4	-14.8	-15.1	**-15.7**	-15.0	-13.77
28	-14.8	-14.9	-15.2	-14.9	-14.8	-15.2	-15.6	-15.4	-15.6	-15.9	-16.2	-16.9	-17.3	**-17.6**	-17.3	-15.8	-13.4	-13.1	-13.9	-13.8	**-13.1**	-13.2	-13.4	-13.1	-15.02
29	-13.1	-14.2	-14.1	**-15.1**	-15.0	-14.5	-14.4	-14.8	-14.7	-14.5	-13.3	-13.1	-12.5	-12.5	-12.1	-11.8	-11.8	-12.1	-12.4	-12.0	-11.9	-11.9	**-11.7**	-11.8	-13.14
30	-11.1	-10.9	-10.6	-10.6	-10.5	-10.5	-10.4	-10.4	-10.3	**-10.1**	-10.1	-10.6	-11.0	-11.8	-11.8	-12.2	-12.3	-12.4	**-12.7**	-12.0	-12.6	-12.0	-12.1	-11.5	-11.27
M.	-8.32	-8.38	-8.45	-8.49	-8.41	-8.42	-8.35	-8.53	-8.44	-8.39	-8.35	-8.36	-8.36	-8.57	-8.51	-8.38	-8.35	**-8.29**	-8.43	**-8.61**	-8.48	-8.51	-8.38	-8.38	-8.42

December.

Datum	1a	2a	3a	4a	5a	6a	7a	8a	9a	10a	11a	MT	1p	2p	3p	4p	5p	6p	7p	8p	9p	10p	11p	MN	Mittel
1	**-11.1**	-12.1	-12.5	-13.1	-13.3	-14.0	-14.2	**-14.3**	-14.0	-13.8	-13.7	-13.5	-13.3	-13.4	-13.8	-13.7	-13.7	-13.6	-13.5	-13.9	-13.5	-13.6	-13.4	-13.4	-13.43
2	-14.0	-13.9	-14.2	-14.0	-14.4	-14.3	-14.1	-14.0	**-13.7**	-13.8	-14.0	-14.2	-14.0	-14.4	-14.5	-14.1	-14.5	-14.3	-14.0	-14.2	**-14.5**	-14.2	-14.0	-14.4	-14.15
3	-14.0	**-14.2**	-13.7	-13.8	-13.4	-13.5	-13.1	-12.2	-12.5	-12.4	-11.6	-11.4	-11.2	-11.5	-11.4	-10.5	-10.3	-8.4	-7.0	-7.3	**-7.0**	-7.3	-9.2	-9.3	-11.09
4	-8.1	-6.3	**-5.6**	-6.4	-7.4	-7.9	**-8.3**	-8.1	-8.0	-7.9	-7.8	-7.5	-6.9	-6.8	-6.9	-6.7	-6.2	-6.2	-5.8	-6.0	-6.1	-6.4	-6.1	-6.2	-6.90
5	**-6.3**	-6.8	-7.2	-7.1	-7.2	-7.6	-7.4	-7.3	-7.4	-7.3	-7.3	-7.4	-7.3	-7.3	-7.5	-7.9	-7.7	-7.8	-8.4	-7.8	**-8.7**	-8.4	-8.4	-8.7	-7.59
6	-8.8	-9.5	-9.6	-10.2	-10.2	-10.5	-10.3	-10.4	-10.8	-10.9	-10.9	**-11.3**	-11.2	-10.6	-9.5	-8.1	-9.3	-9.1	-8.9	-8.3	**-7.6**	-7.6	-8.1	-7.7	-9.56
7	**-8.1**	-7.4	-6.9	-6.2	-6.7	-6.7	-6.7	-7.0	-7.1	-7.0	-6.9	-7.0	-6.8	-6.6	-5.9	-6.4	-5.7	-5.9	-5.6	-3.7	-3.2	-2.9	-2.4	**-1.4**	-5.84
8	**-1.2**	-0.6	-0.3	0.3	0.6	0.7	0.5	0.5	0.8	1.2	1.0	1.3	0.8	**1.3**	0.5	0.6	0.6	0.6	0.6	0.6	0.6	0.6	0.4	0.3	0.51
9	0.4	**0.2**	0.2	0.4	0.4	0.6	0.5	0.3	0.3	0.3	0.4	0.5	0.6	0.4	0.9	0.9	1.4	1.3	1.5	1.5	**2.3**	1.8	2.2	2.2	0.90
10	**2.1**	1.0	0.5	-2.3	-4.3	-6.0	-5.3	-5.3	-6.8	-5.1	-7.6	-7.8	-7.9	**-9.9**	-9.5	-9.7	-9.5	-9.4	-8.9	-8.6	-8.7	-9.3	-9.5	-9.7	-6.56
11	**-10.0**	-10.5	-10.9	-11.3	-11.6	-11.8	-12.3	-12.6	-13.1	-13.4	-13.8	-13.9	-14.1	-14.6	-14.7	-14.7	-15.0	-15.2	-15.5	-15.6	-15.7	-15.7	**-15.9**	-15.9	-13.66
12	**-15.9**	-15.8	-15.6	-15.5	-15.2	-15.1	-15.1	-15.5	-15.4	-15.3	-15.4	-15.5	-15.7	-15.4	-15.4	-14.7	-14.9	-14.3	-14.1	-14.1	-13.7	-13.6	-13.5	**-13.3**	-14.92
13	-13.6	-13.9	-13.6	-13.8	-14.0	-13.6	-13.6	**-13.5**	-13.6	-13.8	-13.8	-14.3	-14.3	-14.3	-14.3	-14.7	-15.0	-15.2	-15.3	-15.4	-15.7	-15.8	**-15.9**	-15.8	-14.45
14	**-15.8**	-15.7	-15.7	-15.6	-15.6	-15.6	-15.5	-15.4	-15.4	-15.3	-15.2	-15.0	-14.9	-14.8	-15.0	-14.9	-14.8	-14.6	-14.4	-14.5	-14.4	**-13.9**	-14.1	-13.9	-15.00
15	**-13.7**	-13.5	-13.3	-13.0	-12.6	-12.2	-11.6	-11.6	-11.2	-11.0	**-10.7**	-10.8	-11.4	-11.7	-11.5	-11.4	-11.3	-11.1	-11.1	-11.1	-12.1	-12.3	-13.3	-13.6	-11.96
16	**-14.6**	-14.9	-15.1	-16.3	-16.8	-17.5	-18.6	-19.0	**-20.8**	-19.7	-20.3	-18.3	-19.1	-14.0	-15.3	-15.0	-14.9	-16.7	-17.6	-17.8	-18.3	-19.3	-19.7	-20.1	-17.49
17	-20.2	-21.0	-20.7	-20.5	-20.7	-20.5	-21.7	-22.1	-22.2	**-22.3**	-22.2	-21.7	-21.6	-21.5	-22.0	-21.6	-21.2	-20.8	-20.5	-20.1	-19.3	-18.9	-18.5	**-18.0**	-20.82
18	**-17.9**	-17.8	-17.6	-17.3	-17.1	-16.9	-16.7	-16.4	-16.4	-16.3	-16.2	-15.9	-16.0	-16.0	-16.0	-15.8	-15.9	-16.0	-16.1	-16.1	-16.0	-16.0	-15.1	**-15.0**	-16.35
19	-15.0	-15.0	-15.0	-15.0	-15.1	-15.1	-15.0	-15.2	-15.6	**-15.9**	-15.8	-15.4	-14.7	-14.2	-14.2	-14.3	-13.8	-13.9	**-13.8**	-13.9	-13.9	-14.0	-13.9	-13.8	-14.65
20	**-13.5**	-14.1	-15.1	-15.4	-16.5	-16.7	-17.5	-18.7	**-18.7**	-18.6	-18.4	-18.7	-18.5	-18.5	-18.4	-18.5	-18.1	-17.9	-17.6	-17.8	-17.8	-17.7	-17.6	-17.6	-17.41
21	-17.5	-17.5	-17.5	-17.5	-17.5	-17.5	-17.5	-17.6	-17.6	-17.8	**-18.0**	-16.6	-17.0	-16.3	-16.5	-14.2	-13.3	-12.7	-12.4	-12.0	-12.2	-11.6	-11.0	**-10.9**	-15.42
22	**-12.0**	-12.1	-12.3	-12.3	-13.6	-14.4	-14.8	-15.4	-16.4	-16.2	-16.0	-16.0	-16.2	-15.1	-15.3	-15.7	-17.5	-18.5	-19.5	-20.1	-20.0	-20.6	-20.2	**-20.7**	-16.29
23	-19.7	**-19.9**	-19.8	-19.8	-18.9	-18.0	-18.3	-17.5	-16.7	-15.6	-15.2	-14.4	-15.4	-14.0	-12.2	-12.2	-13.4	-13.8	**-9.9**	-13.2	-11.8	-11.3	-10.7	-11.3	-15.12
24	-11.3	-10.3	-10.5	-9.6	-10.1	-11.7	-11.5	-9.7	-11.3	-11.1	-11.9	-10.8	-10.7	-11.6	-10.8	-9.3	-9.0	**-8.2**	-10.4	-9.6	-11.3	**-12.2**	-11.9	-11.1	-10.66
25	-9.6	-8.0	-7.2	-7.8	-8.7	-9.7	-9.6	-9.8	**-9.9**	-8.5	-8.2	-9.7	-8.8	-8.8	-9.1	-7.8	-7.8	-7.8	**-7.1**	-8.9	-8.1	-8.6	-8.7	-8.3	-8.60
26	-8.5	-8.4	-8.1	-7.4	-6.9	-6.7	-6.6	**-6.6**	-6.6	-7.2	-7.4	-7.5	-7.6	-8.1	-8.5	-8.5	-8.6	-8.8	-9.0	-9.1	-9.2	-9.3	-9.4	**-9.4**	-8.06
27	**-9.5**	-9.5	-9.6	-9.5	-9.5	-9.5	-9.6	-9.6	-9.6	-9.7	-9.6	-9.5	-9.5	-9.5	-9.7	-9.6	-9.7	-10.2	-10.7	-11.2	-11.7	-12.6	-13.7	**-14.1**	-10.29
28	-14.3	-14.7	-14.6	-14.2	-14.1	-13.9	-13.3	-14.1	-14.2	-14.2	-15.1	**-15.6**	-15.1	-14.8	-14.0	-14.3	-14.2	-13.8	-13.0	-13.0	-12.1	-13.3	-12.2	**-12.0**	-13.92
29	-11.7	-12.3	-12.3	-12.9	-13.3	-12.7	-12.5	**-9.8**	-10.0	-10.9	-12.2	-12.9	-13.2	-15.2	**-15.6**	-15.4	-14.5	-14.4	-14.1	-14.3	-12.8	-12.5	-12.9	-12.1	-12.94
30	-11.9	-10.1	**-8.1**	-9.7	-12.0	-14.4	-14.1	-14.2	-14.5	-14.2	-13.9	-13.9	-14.2	-14.3	-14.4	-14.7	-15.1	-15.8	-15.2	-15.7	-16.2	-16.8	**-17.0**	-16.3	-14.03
31	**-16.9**	-16.4	-15.9	-16.3	-16.1	-15.5	-15.4	-15.6	-15.6	-15.6	-15.3	-14.7	-11.9	-9.2	-9.7	-9.9	-10.7	-11.4	-12.6	-12.8	-12.0	-9.3	-9.3	**-8.9**	-13.21
M.	-11.68	-11.64	**-11.54**	-11.71	-11.99	-12.20	-12.23	-12.18	**-12.39**	-12.24	-12.35	-12.24	-12.16	-11.96	-11.94	-11.70	-11.73	-11.74	-11.61	-11.74	-11.64	-11.70	-11.71	-11.63	-11.90

TERMIN-BEOBACHTUNGEN.

Haldde. **1925.**

H = 904 m, H_b = 892.8 m $\varphi = 69^0\ 56'$ N

C_g = 1.65 mb bei 915 mb **Januar.** $\lambda = 22^0\ 56'$ E

Datum.	Luftdruck 800 oder 900 + 8	2	7	Luft-Temperatur. Min.	8	2	7	Absolute Feuchtigkeit. 8	2	7	Relative Feuchtigk. 8	2	7	Richtung und Stärke des Windes. Meter/Sekund. 8	2	7	Bewölkung. 8	2	7	Niederschl.	Bemerkungen.
1	78.8	80.6	78.7	-4.6	-4.6	-4.7	-4.8	2.1	2.4	1.9	66	74	57	NW 5.6	S 11.4	SW 25.0	4	2	0	0.0	∗^{0} n, Ш p, Ц 5 p.
2	73.9	71.4	68.0	-8.0	-6.1	-6.1	-6.2	2.7	2.7	2.7	93	93	93	SSE 12.5	SSW 13.2	SSE 22.8	10∗	7	10	0.0	∗^{0} n, a, p.
3	61.2	61.5	63.8	-7.5	-6.5	-5.9	-5.7	2.6	2.8	2.9	93	93	95	SE 15.6	SSE 15.6	S 17.9	10≡	10∗	10∗	10.8	∗^{0} n, a, p.
4	67.8	68.3	68.0	-7.7	-7.7	-7.2	-8.0	2.4	2.5	2.3	91	94	91	S 7.8	S 6.3	S 6.3	10≡	10≡	10≡	2.7	∗^{0} n, a, p.
5	69.2	71.6	73.4	-11.1	-11.1	-11.8	-11.8	1.7	1.7	1.6	89	91	88	S 8.5	S 4.2	S 4.2	10∗	10	9	3.9	∗^{0} n, a, Ш p, Ц 9 p.
6	78.0	80.3	82.7	-12.0	-10.1	-9.8	-8.5	1.9	2.0	2.2	90	90	91	SSE 1.4	SSE 1.4	NE 2.8	0	7	10≡	0.0	≡^{0} p, Ш p, Ц 7 p.
7	86.3	86.7	87.2	-10.4	-9.1	-9.3	-10.7	**1.1**	1.9	1.8	91	83	89	NE 1.0	SE 1.0	0.0	0	10	0	3.9	∗^{0} n, ≡ p.
8	88.7	88.2	85.9	-11.1	-10.8	-12.0	-14.3	1.8	1.6	1.4	89	88	87	SE 4.2	SSE 12.5	S 15.6	10	0	2		Ц p.
9	84.2	85.0	86.0	**-14.9**	-14.1	-14.2	-14.7	1.4	1.4	1.3	87	87	86	S 13.2	S 9.6	S 8.3	4	10	2	2.0	Ш p.
10	92.0	92.7	90.7	-14.8	-7.8	-8.7	-7.5	2.0	2.2	1.8	80	91	70	S 6.3	SW 4.2	SW 7.6	10∗	1	0	1.0	∗^{0} n, Ш 7 p, Ц p bis 12 p.
11	88.0	88.0	80.4	-9.9	-9.9	-6.3	-12.5	1.9	1.8	1.5	88	61	86	S 26.3	S 3.6	SW 41.6	4	6	10		Ш p.
12	85.4	88.3	84.4	-12.5	-2.7	-0.4	0.7	3.4	3.3	3.4	92	79	71	W 25.0	SW 10.0	WSW 25.0	8	9	0	8.9	∗ n, a, Ш p.
13	85.9	89.2	92.6	-9.9	-4.9	-7.0	-9.0	3.0	2.5	2.1	94	92	91	W 22.8	WNW 19.2	WNW 16.7	10∗	6∗	2	6.1	∗ n, a, p, Ш p, Ц mit Nebenmond 8 p.
14	90.4	83.2	73.0	-9.6	-8.3	-3.0	-3.7	2.2	3.2	3.2	91	86	93	WSW 25.0	SW 15.6	SW 20.8	10	10	10	10.6	∗ n, ∗^{0} a, p, Ш, Ц p.
15	53.5	**49.2**	55.8	-9.6	-3.2	-2.9	-3.2	3.4	3.3	3.1	93	89	86	SW 20.8	W 43.0	SW 10.2	10	0	10∗	0.7	∗^{0} n, p.
16	77.6	69.6	67.0	-10.2	-10.2	-10.1	-4.6	1.9	1.9	2.5	87	89	77	WNW 11.4	WSW 35.8	SW 16.7	9∗	10	0	30.4	∗^{2} n, a.
17	76.8	83.6	93.2	-11.0	-6.9	-8.5	-8.0	2.5	2.2	2.3	88	91	91	WNW 22.8	W 41.6	W 25.0	10∗	10∗	10∗	43.0	∗^{2} n, a, p.
18	84.4	80.6	82.0	-9.0	-1.4	-2.7	-5.5	3.4	3.3	2.8	82	90	92	SW 25.0	SW 27.8	W 25.0	7∗	10∗	10∗	27.5	∗^{2} n, a, p.
19	80.3	83.8	93.2	-8.1	-7.9	-7.2	-12.8	2.3	2.1	1.5	91	81	87	SW 12.5	NW 33.8	WNW 29.4	10∗	10∗	10∗	12.0	∗ n, a, p.
20	01.5	97.6	99.2	-14.2	-5.2	-1.8	-0.4	2.9	3.9	4.4	94	96	98	W 9.6	W 35.8	W 31.2	10∗	10∗	10	40.7	∗ n, a, p.
21	00.2	05.5	09.5	-5.2	0.4	0.2	0.5	**4.7**	4.6	**4.7**	98	98	98	W 35.8	WNW 19.2	WNW 15.6	10∗	10●	10●∗	48.9	∗^{2} n, ◍^{0} a, p, ∗^{0} p.
22	15.4	**15.6**	15.1	-0.3	-0.3	1.0	0.5	4.3	3.7	4.0	96	75	85	WNW 6.3	WSW 6.3	SW 5.6	10●	10	9	5.9	◍^{0} a.
23	09.0	07.1	05.5	-1.6	-1.3	**4.1**	-0.9	3.0	2.1	2.6	73	34	62	SW 4.2	WSW 1.0	WSW 8.9	0	3	4	0.0	
24	05.8	10.4	09.4	-4.1	-4.1	-5.7	-6.9	3.2	2.9	2.4	94	95	87	WNW 16.7	NW 4.2	WNW 12.5	10∗	10∗	10∗	0.3	∗^{0} n, a, ∗ p, Щ 7 p.
25	07.4	10.7	13.4	-8.0	-8.0	-10.4	-11.6	2.3	1.9	1.6	91	87	82	WNW 5.0	NW 8.3	NW 12.5	10∗	10∗	10∗	22.0	∗ n, a, p.
26	13.4	08.3	04.0	-11.8	-8.3	-3.1	-1.8	2.2	3.5	3.9	91	95	96	NW 0.2	WNW 7.4	NW 12.5	10∗	10∗	10∗	27.4	∗^{2} n, a, p.
27	04.8	03.5	03.8	-8.3	-2.0	-2.4	-2.5	3.8	3.7	3.6	96	96	95	NW 22.8	WNW 31.2	WNW 31.2	10∗	10∗	10∗	40.0	∗^{2} n, a, p.
28	04.4	05.9	06.8	-3.7	-3.5	-3.5	-3.6	3.3	3.3	3.3	94	92	94	WNW 22.8	W 17.9	W 12.5	9∗	10∗	10∗	53.2	∗ n, a, ∗^{0} p.
29	04.7	99.0	94.6	-4.0	-3.9	-7.0	-9.9	2.4	2.4	1.9	69	90	87	SW 2.8	S 20.8	S 20.8	9∗	9	0	2.0	∗^{0} n, Щ 7 p.
30	88.8	86.7	86.0	-11.5	-9.8	-8.9	-9.3	2.0	2.1	2.0	90	91	91	S 20.8	S 27.8	S 19.2	10∗	10∗	10	0.5	∗^{0} n, a, p.
31	81.9	80.4	80.0	-10.1	-9.6	-8.7	-8.3	2.0	2.2	2.3	90	93	94	SSE 8.3	SE 11.9	SSE 6.3	10∗	10	10∗	1.2	∗^{0} n, a, p.
M.	88.4	88.1	88.2	-8.9	-6.4	-5.9	-6.6	2.6	2.6	2.6	89	87	87	12.0	13.2	14.5	8.2	8.1	7.0	405.6	

Februar.

Datum.	Luftdruck 8	2	7	Temp. Min.	8	2	7	Abs. F. 8	2	7	Rel. F. 8	2	7	Wind 8	2	7	Bewölkung 8	2	7	Niederschl.	Bemerkungen.
1	79.9	83.1	85.1	-9.6	-7.2	-7.4	-6.8	2.5	2.4	2.5	92	90	90	SW 15.6	SW 10.4	SW 8.3	10∗	8	1	4.9	∗^{0} n, a, Ц 7 p, Ш 7-12 p.
2	87.6	86.6	84.0	-7.4	-4.3	-4.5	-5.1	2.6	2.9	2.4	77	90	75	W 8.3	SW 8.3	WSW 10.0	9	9	6∗	0.0	Ш 8-12 p.
3	77.5	78.0	77.0	-10.5	-7.3	-5.0	-5.1	1.9	2.5	3.0	70	77	94	SW 4.2	WSW 9.3	W 20.8	10	5∗	9		∗^{0} a, p, Ш 8 p.
4	75.6	75.9	75.9	-7.4	-5.8	-4.8	-5.1	2.3	2.2	1.9	76	67	61	W 13.9	W 5.6	W 1.6	10	9	8	3.0	∗^{0} a, ⊕ 12^{30} p, Ш 5^{20}-6 p, Ц 6^{45} p.
5	73.6	66.8	63.4	-6.5	-5.6	-9.5	-8.0	2.2	2.0	2.1	71	90	82	SW 10.0	SW 25.0	W 6.3	10	10	7		⊕ 10^{50} a, Ц 5^{30} p, Ш 5-6 p.
6	**61.1**	63.8	67.6	-11.5	-7.9	-8.4	-10.7	2.2	2.3	1.9	85	94	90	WSW 8.3	N 5.0	NNE 7.6	10	10∗	10		∗^{0} a, ⊕ 10^{30}-11^{30} a, ∗^{0} p, Ш 5^{30} p, 11-12 p, Ц 11 p.
7	76.6	79.9	81.2	-12.4	-11.0	-11.7	-11.6	1.8	1.5	1.5	90	79	79	WNW 8.3	W 16.7	W 27.8	10∗	1	10	6.0	Ц 12^{30} a, ∗^{0} n, a, p.
8	83.6	81.8	77.4	-12.4	-9.8	-9.7	-13.0	1.6	1.1	1.1	72	49	66	SW 20.8	SW 31.2	SW 41.6	10	10	10	0.2	Ш 12^{10}-1 a, ⊕ 10^{30} a, Ш 7 p, Ц 6-9 p.
9	71.1	71.0	71.1	-14.0	-7.6	-7.5	-8.2	2.4	2.5	2.3	92	94	91	S 25.0	S 33.8	S 31.2	10≡	10∗≡	10≡	12.3	Ц 1^{45} a, ∗, ≡^{0} n, a, p.
10	71.4	73.9	76.7	-9.8	-9.8	-8.3	-7.7	2.0	2.2	2.5	92	91	96	S 7.8	S 12.5	WSW 10.0	10≡	10∗≡	10≡	3.9	∗^{0}, ≡^{0} n, ∗^{0} a, p.
11	75.9	75.4	75.9	-10.0	-10.0	-12.0	-10.7	1.9	1.6	1.9	90	88	91	S 15.6	S 20.8	SSE 8.3	10	9	10∗	2.8	∗ n, ∗^{0}, ≡^{0} a, ⊕ 10 a, ⦶ 12 a, ∗^{0}, ≡^{0} p.
12	78.7	82.2	80.7	-12.0	-8.3	-6.3	-8.2	2.2	2.3	2.1	91	78	84	S 4.5	SSW 7.1	S 20.8	10∗≡	0	5	1.5	∗^{0}, ≡^{0} n, ∗^{0} a.
13	67.9	72.2	74.2	-12.0	-4.6	**-3.5**	-4.0	**3.1**	2.8	2.3	94	79	67	SSE 16.7	SW 16.7	SW 25.0	10≡	9	0	6.8	∗^{0}, ≡ n, a, ∗^{0} p.
14	84.3	89.8	95.8	-6.0	-3.9	-4.2	-3.9	2.4	2.7	2.4	71	79	71	SW 16.7	W 28.7	W 20.8	9	8	0	5.5	Щ^0 7 p.
15	01.6	01.9	01.1	-5.4	-4.8	-4.4	-5.8	2.5	2.5	2.5	79	76	84	W 2.8	0.0	ENE 6.3	10	9	0	0.7	⦶ 12 a, ⊕ 12^{45} p.
16	97.9	99.5	00.4	-6.7	-6.4	-6.3	-6.4	2.6	2.8	2.6	93	95	93	N 6.3	NNW 7.1	NW 4.5	10∗	10∗	5∗	4.4	∗ n, a, p.
17	01.5	02.4	01.6	-8.0	-7.4	-7.2	-7.9	2.4	2.4	2.3	92	90	91	WNW 7.4	NW 5.0	WNW 6.3	9∗	9∗	2∗	3.0	∗^{0} n, a, ⊕ 9^{35} a, ⦶ 9-10 a, 12 a, ∗^{0} p.
18	98.4	99.2	00.2	-7.9	-7.0	-7.4	-9.1	2.5	2.4	1.1	92	92	90	NW 8.3	NE 5.0	NNE 12.6	10∗	10∗≡	10∗≡	2.2	∗^{0}, ≡ n, a, p.
19	01.1	00.2	99.1	-11.3	-11.3	-10.2	-10.9	1.7	2.0	1.8	89	95	89	NW 5.0	NW 8.1	NW 6.3	9	9∗	1	5.9	∗ n, a, p, ⦶ 1^{45} p, Щ 7 p.
20	97.8	98.4	99.6	-12.5	-12.3	-12.4	-14.6	1.7	1.2	1.3	93	65	86	WNW 3.8	WNW 1.0	SSE 10.0	10∗	2	3	2.7	∗^{0} n.
21	01.1	00.6	99.0	**-17.2**	**-17.2**	-13.6	-12.8	0.9	0.7	**0.5**	77	47	32	S 8.3	SW 2.3	SW 3.3	0∗	9	4	0.9	∗^{0} n, ⊕ 1 p.
22	98.7	01.0	02.7	**-17.2**	-13.2	-13.7	-14.0	1.5	1.4	1.3	90	86	86	NW 9.3	NW 12.5	NW 6.3	10∗	9∗	0	1.3	∗ n, a, ⊕ mit Nebensonne 10 a, ⦶ 10^{30} a, ∗ p.
23	03.8	04.3	04.4	-14.8	-12.3	-12.2	-10.8	1.6	1.5	1.0	88	82	52	NW 2.6	S 10.0	W 8.3	2	8	0	4.6	⊕ 8^{30}-11^{30} a.
24	10.0	13.8	14.4	-12.3	-10.2	-9.3	-10.1	1.6	1.6	1.5	76	71	71	W 7.4	0.0	SW 7.8	0	8	0		Щ 7 p.
25	15.4	**16.3**	15.4	-11.1	-9.4	-8.8	-10.7	1.6	2.2	1.9	71	93	91	NNW 5.0	E 6.3	SE 8.9	2	9∗	0		∗^{0} a, p, ⦶ 3 p, Ц 7 p.
26	11.9	11.4	10.6	-11.3	-9.0	-9.3	-11.2	1.1	1.1	1.3	48	48	63	S 8.3	SSW 2.8	S 11.9	6	4	0	0.0	Nebensonne 12 a-3 p, ⦶ 12^{30}-3^{20} p.
27	09.5	09.5	09.2	-14.2	-14.2	-15.9	-15.0	1.4	1.2	1.3	93	87	86	SE 13.9	S 14.7	S 12.5	0	3	2≡		⦶ 10-10^{30} a, 12^{40} p, Ц 7-8 p.
28	08.7	08.7	08.4	-16.9	-14.5	-13.7	-15.3	1.3	1.4	1.3	86	86	93	SE 20.8	SSE 16.7	SE 16.7	9	8	10		∗^{0} a, ⦶ 9 a-1 p, ∗^{0}, ≡^{0} p.
M.	90.1	91.0	91.1	-11.0	-9.0	-8.8	-9.4	2.0	2.0	1.8	83	81	80	9.8	10.4	11.4	8.0	7.7	4.8	72.6	

Haldde.

1925.

$H = 904\,m$, $H_b = 892.8\,m$ $\varphi = 69^0\ 56'$ N

$C_g = 1.65$ mb bei 915 mb $\lambda = 22^0\ 56'$ E

März.

Datum.	Luftdruck. 800 oder 900 + 8	2	7	Luft-Temperatur. Min.	8	2	7	Absolute Feuchtigkeit. 8	2	7	Relative Feuchtigk. 8	2	7	Richtung und Stärke des Windes. Meter Sekund. 8	2	7	Bewölkung. 8	2	7	Niederschl.	Bemerkungen.
1	07.0	04.8	03.8	-19.8	-19.5	-20.3	-21.5	0.9	0.9	0.8	87	87	87	S 8.3	S 12.5	S 16.7	10	5	3	2.5	✱^{0} n, ⊕ 2 p, Ш, Ш 7-8 p.
2	04.0	03.4	03.9	-21.9	-10.0	-8.6	-8.6	1.5	1.9	1.8	69	78	75	WSW 2.1	W 10.0	WSW 6.3	8	10✱	1		⊕ 8^{30} a, ✱^{0} a, p, Ш 8 p. Ш 8-9^{30} p, 12 p.
3	04.2	02.7	99.2	-10.5	-8.6	-6.7	-5.5	2.2	2.1	2.5	90	76	84	WNW 12.5	SW 13.2	SW 9.3	3	9	10✱	1.2	✱^{0} n, a, p, ⊕ 10^{30} a-1^{30} p, Ш 8-12 p,
4	88.4	87.1	87.5	-15.2	-13.2	-7.9	-8.4	1.5	2.3	2.2	91	91	91	SW 8.3	WNW 20.8	WNW 12.5	10✱	10✱	10	0.5	✱^{0} n, a, p, Ш, Ш 9-12. Ш 7-11 p.
5	87.1	83.5	83.4	-17.2	-16.7	-19.6	-21.6	1.2	0.9	0.8	93	88	99	SE 5.0	SE 19.2	SE 10.0	10✱	1	3✱	12.6	✱^{0} n, a, ≡^{0} a, ⊕, ⦶ a, ✱^{0}, ≡^{0} p, Ш,
6	85.5	85.8	85.1	**-23.2**	-21.0	-21.4	-21.5	0.7	0.7	0.8	83	83	93	ESE 8.3	ESE 5.6	ESE 5.0	1	6	7	1.2	✱^{0} n, ⦶ 11-12 a, Ш 5^{30} p, 11-12 p,
7	83.5	84.6	84.8	-22.7	-22.7	-20.8	-20.9	0.7	0.8	0.8	88	88	86	ESE 8.3	ESE 8.6	SE 10.0	10✱	10	10	2.1	✱^{0} n, a, ⊕ 10-12 a, 1^{20}-2^{30} p, ✱^{0} p,
8	91.6	93.6	94.6	-22.8	-16.3	-14.9	-14.2	1.1	1.4	1.4	86	93	87	ESE 8.3	N 3.6	NE 4.5	10	10✱	10✱	8.0	✱^{0} n, a, p. Ш 7-8^{30} p, Ш 9 p.
9	98.0	99.9	01.5	-16.4	-14.5	-14.7	-14.4	1.3	1.3	1.4	86	90	90	NE 8.3	NE 8.3	NE 5.6	10✱	5✱	0	6.6	✱^{0} n, a, ⊕ Nebensonne 11^{30} a, ⊕, ⦶ 3^{50} p,
10	06.8	09.0	10.7	-14.7	-13.8	-13.7	-12.6	1.4	1.2	1.1	83	76	62	NE 5.0	W 3.6	NW 0.6	0	0	2	1.4	✱^{0} n, Ш 7-8^{30} p, Ш 7-9 p. Ш 6^{55} p,
11	14.4	17.0	18.6	-13.8	-11.6	-11.4	-12.6	1.4	1.5	1.5	76	78	87	W 5.0	W 6.6	W 6.3	7	0	0		⦶ 9^{40}, 10, 12 a, ✱^{0} p, Ш 11^{10} p.
12	21.1	21.5	**21.8**	-13.6	-12.5	-11.8	-13.0	1.4	1.6	1.6	78	82	94	NW 4.5	WNW 3.8	N 5.0	6	10✱	0	0.7	✱^{0} n, a.
13	17.6	12.7	09.8	-14.1	-12.9	-12.7	-13.3	1.5	1.5	1.4	87	84	87	NE 15.6	NE 16.7	NE 19.9	10✱	10✱	10✱	3.2	✱ n, ✱^{2} a, p.
14	07.5	09.1	11.1	-18.1	-18.1	-17.3	-17.8	1.0	1.1	1.1	88	93	93	S 8.3	S 8.3	SSE 8.9	9	10	10✱	20.3	✱^{0}, ≡ n, a, p.
15	15.0	16.8	17.6	-18.3	-16.6	-13.3	-12.2	1.2	1.0	0.8	93	61	44	SSE 8.3	SSE 3.6	N 3.1	8≡	0	0	2.3	✱^{0} n.
16	16.6	12.8	07.5	-16.7	-10.7	-10.6	-11.7	0.9	0.8	1.0	43	42	52	NW 1.0	S 10.0	S 22.8	0	0	0		
17	01.0	01.2	01.9	-15.5	-9.5	-12.4	-10.9	**0.6**	1.0	1.5	32	52	78	SSE 1.3	WNW 8.3	WNW 6.3	0	0	0		
18	91.0	91.1	89.1	-12.4	-6.9	**-4.0**	-5.9	2.3	**2.6**	2.5	83	76	86	SW 25.0	W 13.2	WSW 19.2	10	6	0	0.2	✱^{0} n, a, ⦶ 9-12 a, ✱^{0} p.
19	86.4	84.8	83.4	-8.9	-7.1	-5.5	-5.8	2.5	2.2	2.0	92	71	65	W 6.3	WSW 12.5	SSW 8.3	9	9	10	4.0	✱^{0} n.
20	81.2	83.5	85.9	-7.2	-5.4	-5.6	-7.5	**2.6**	**2.6**	2.5	86	84	94	W 3.3	W 4.2	N 6.3	2	10	10	0.2	✱^{0} n, p.
21	89.6	92.6	93.5	-10.5	-9.7	-8.5	-9.2	2.0	2.3	2.1	89	93	91	NW 10.0	NW 6.9	NW 9.6	10	9	10	5.3	✱^{0} n, a, p.
22	96.2	97.1	97.4	-10.0	-9.8	-9.8	-10.7	1.9	1.9	1.7	87	87	80	NW 6.3	WNW 10.0	WNW 6.3	9✱	4	1✱≡	9.9	✱^{0} n, a, ⊕ 11^{15} a, 3-3^{45} p, ✱^{0} p.
23	96.7	99.0	99.6	-10.9	-8.4	-8.8	-9.5	2.2	1.7	1.4	90	75	63	WNW 12.5	WNW 7.8	WNW 4.2	9	0	0	3.0	Nebensonne 10 a.
24	99.8	00.2	00.8	-10.7	-7.9	-8.2	-8.8	1.2	1.2	1.4	48	51	60	W 6.3	W 2.5	W 6.8	9	0	0		
25	01.9	02.4	03.5	-9.4	-7.2	-7.7	-8.5	1.7	1.9	1.3	65	72	53	W 6.3	W 3.3	WNW 5.0	9	9	9		⦶ 9 a, ⊕ 9-9^{45} a.
26	06.4	08.3	09.4	-9.2	-6.6	-5.8	-6.8	2.1	2.0	2.0	74	69	72	WNW 6.3	WNW 0.5	WNW 2.8	8	0	0		⊕ 10^{30}-12 a, ✱^{0}, ≡^{0} p.
27	09.2	07.8	05.8	-10.2	-9.9	-11.1	-13.0	1.7	1.7	1.5	79	89	90	SW 15.6	S 25.0	SE 25.0	0	9	10		⦶ Nebensonne 9-10 a, ⦶ 11^{30}, 12 a,
28	03.9	05.0	04.6	-14.0	-11.4	-14.2	-15.3	1.7	1.4	1.3	89	93	90	S 29.4	SSE 16.7	S 16.7	10✱	10✱	10	6.8	✱^{0}, ≡ n, ✱^{0} a, p.
29	03.4	01.8	00.7	-20.7	-20.7	-19.8	-19.1	0.8	0.8	0.9	87	82	82	SSE 22.8	SSE 25.0	SSE 25.0	10	10	10	1.9	✱^{0}, ≡^{0} n, ⦶ 10^{30} a, ⊕ 9^{30} a-2 p.
30	90.8	84.7	81.1	-21.2	-18.0	-17.3	-9.1	1.1	1.1	1.0	97	89	44	SSE 22.8	SSW 12.5	W 13.9	10✱	9	0	1.4	✱^{0}, ≡^{0} n.
31	72.7	**71.1**	74.3	-18.0	-9.1	-10.7	-8.5	1.4	1.5	2.0	61	72	83	SE 4.2	NW 12.5	WNW 20.8	10	10	10		✱^{0} a, ⦶ 9-10 a, ⊕ 10^{30} a, ✱^{0} p, Ш 7-11 p.
M.	99.3	99.2	99.1	-15.1	-12.5	-12.1	-12.2	1.5	1.5	1.5	79	79	76	8.9	9.8	9.9	7.3	6.2	5.0	95.3	

April.

Datum.	Luftdruck 8	2	7	Min.	8	2	7	Abs. F. 8	2	7	Rel. F. 8	2	7	Wind 8	2	7	Bew. 8	2	7	Niederschl.	Bemerkungen.
1	93.5	85.5	86.7	-10.8	-7.0	-7.3	-8.0	2.3	2.4	1.5	85	92	59	NW 3.6	WNW 12.5	WSW 16.7	10	10	10	2.2	✱^{0} n, a, ⊕, ⦶ 9 a.
2	88.2	90.0	89.6	-10.1	-9.6	-8.8	-9.7	1.4	1.6	1.5	61	66	69	W 10.0	W 13.9	S 16.7	8	10	10	0.5	✱^{0} n, p.
3	83.6	84.4	83.8	-10.6	-8.3	-5.9	-8.1	2.0	2.1	2.3	82	71	91	W 6.3	W 2.8	NW 6.3	9	10	10✱	1.9	⊕ 11^{40} a, ✱^{0} p.
4	87.6	98.0	01.6	-9.7	-9.7	-10.8	-12.3	2.1	1.6	1.6	92	79	88	N 20.8	NW 10.0	NW 4.2	10✱	9✱	9✱	3.0	✱^{0} n, a, p.
5	92.8	85.5	**82.4**	-12.7	-12.3	-5.8	-3.8	1.5	2.8	3.1	82	93	91	SSW 31.2	SW 26.8	WSW 32.5	10✱	10✱	10✱	1.6	✱^{0} n, a, p.
6	07.0	06.3	03.2	-12.3	-8.4	-8.0	-5.3	2.1	2.1	2.1	84	82	67	WSW 4.2	SW 12.0	SW 12.0	8	0	9	37.6	✱^{2} n.
7	97.5	01.0	03.0	-9.3	-3.0	-4.2	-8.0	3.6	3.0	2.1	97	89	82	WNW 16.0	NW 10.7	NW 16.0	10✱	10✱	9	4.0	✱^{0} n, ✱ a, p.
8	07.2	06.2	04.2	-8.2	-6.5	-0.5	-0.4	2.6	3.5	3.6	92	78	81	WNW 8.8	SW 10.7	SW 12.0	10	8	10	5.7	✱^{0} n, p.
9	99.4	98.6	02.6	-6.5	0.1	-1.5	-2.1	3.8	**4.1**	3.7	81	00	94	W 12.0	WNW 28.7	WNW 12.0	9✱	10✱	9✱	0.4	✱^{0} n, ✱ a.
10	10.4	15.4	**17.6**	-5.5	-5.3	-5.5	-6.9	3.0	2.9	2.6	96	93	94	NW 2.8	NW 1.6	SE 0.0	10✱	10	10	11.4	✱ n, ✱^{0} a.
11	15.5	11.8	11.9	-6.9	-1.5	-1.2	-0.6	3.8	3.6	2.9	92	86	66	W 5.6	WNW 25.0	WNW 12.5	10✱	10	10	1.3	✱^{0} n, ✱ a.
12	05.9	06.6	05.8	-1.6	-1.6	-0.9	-1.8	4.0	4.0	3.9	96	94	97	NW 15.6	W 10.4	WNW 12.5	9✱	10✱	10✱≡	1.7	✱^{0} n, a, ⦶ 8-10^{40} a, ✱^{0} p.
13	06.4	06.2	05.5	-1.9	-1.2	-1.2	-1.5	3.9	3.4	3.1	92	79	74	W 2.3	W 4.2	W 8.1	6	0	5	0.1	✱^{0} n, ⦶ 8 a.
14	05.4	05.5	05.0	-2.5	-0.4	**1.0**	-0.3	3.6	3.6	3.5	82	74	77	NW 0.8	S 1.7	SSE 6.3	10	0	0		⦶ 9-12 a.
15	01.4	98.8	96.6	-2.0	-0.2	-0.7	-2.0	3.0	3.9	3.0	68	89	77	S 13.9	SW 20.8	WNW 16.7	6	7	0		⦶ 9-10 a, 3-5 p.
16	91.6	91.0	90.3	-3.9	-1.7	0.1	0.2	4.0	3.6	3.0	00	78	63	S 17.9	SW 13.9	SW 22.8	10≡	9	9		≡ a, ⦶ 9 a-1 p.
17	88.3	89.6	89.6	-2.5	-1.2	0.2	-1.0	4.0	3.7	3.6	95	79	84	SSW 16.7	0.0	W 2.1	10≡	10	10		≡^{2} a, ⦶ 9 a, 12 a-4 p, ⊕ 12 a-2 p, 3 p.
18	87.5	88.3	89.2	-2.6	-2.0	-1.9	-3.3	3.8	3.9	3.4	96	96	95	NNE 4.5	NW 8.3	WNW 17.9	10✱≡	10≡	9✱	0.5	✱^{0}, ≡ n, ≡ a, ✱^{0} p.
19	94.4	97.8	99.5	-4.7	-4.7	-5.5	-6.3	3.1	2.9	2.6	94	93	91	NW 8.3	N 3.8	N 1.6	10✱≡	10✱	10✱	10.7	✱^{0}, ≡^{0} n, a, p.
20	02.4	03.0	01.9	-7.2	-6.3	-5.9	-7.5	2.6	2.8	2.5	91	93	94	N 1.7	0.0	S 8.3	10✱	9✱	0	2.7	✱^{0} n, a, ⦶ 12 a-1 p, 6^{30} p.
21	99.6	00.7	01.8	-8.7	-3.7	-2.7	-4.2	2.4	3.5	3.2	69	93	04	NW 2.8	NW 5.0	SSW 3.6	10	10✱	10≡	2.6	✱^{0} n, ✱^{0}, ≡^{0} a, p, ⊕ 8^{30}-10 a, 3 p, ⦶ a, p,
22	03.9	03.9	03.2	-5.2	-3.1	-5.4	-5.6	3.0	2.9	2.8	82	94	93	W 0.6	S 12.5	SSE 8.3	9	10≡	10	1.6	✱^{0} n, ≡^{0} a, ⊕ 10 a-1^{30} p, ✱^{0} p.
23	00.3	00.7	00.8	-7.1	-7.1	-6.3	-7.6	2.2	2.1	2.2	81	74	84	S 17.9	SSE 27.8	SSE 27.8	2	2	2	1.0	⦶ 9-12 a.
24	00.0	98.7	96.8	-14.5	-13.5	-7.7	-8.8	**1.3**	1.6	2.1	80	60	90	SE 25.0	SSE 22.8	SE 22.8	10	10	10✱≡		✱^{0}, ≡ p.
25	89.1	87.6	86.7	**-14.6**	-9.8	-7.7	-7.8	2.0	2.2	2.3	92	86	91	SE 4.2	SE 2.1	WNW 6.3	10✱	10✱	10✱	8.9	✱, ≡ n, ✱^{0} a, p, ⊕ mit Nebensonne 5-6 p.
26	88.3	92.3	95.4	-9.8	-5.8	-5.9	-7.2	2.8	2.8	2.5	93	95	92	NW 5.0	NE 6.6	NE 6.3	9	10✱	10✱≡	2.0	✱ n, a, ⦶ 9^{45} a, 10 a, ✱, ≡^{0} p.
27	03.0	05.9	06.8	-9.6	-9.0	-8.9	-10.7	2.2	2.0	1.8	93	88	89	NE 3.6	NE 3.8	NE 2.1	10✱	9	10✱	16.3	✱, ≡ n, a, p.
28	06.8	07.6	08.0	-13.3	-10.1	-9.3	-10.0	1.9	1.7	1.8	90	73	82	NE 1.9	NW 4.5	NW 8.3	8	2	9✱	1.9	✱^{0} n, a, p, ⊕ 2 p, ⦶ 4^{30} p.
29	12.8	15.9	17.0	-10.3	-8.3	-7.1	-8.4	2.2	2.2	2.1	91	83	88	NNW 3.8	0.0	NW 0.0	10✱	9	9	0.7	✱^{0} n, a, ⦶ 11^{30} a, 2, 5 u. 7 p.
30	16.4	15.4	13.8	-10.2	-9.6	-7.8	-8.7	2.2	2.2	2.1	00	86	88	W 6.3	S 8.9	SSE 10.0	10≡	10	10	0.2	≡^{0} n, a, ⦶ 8-11^{30} a.
M.	99.2	99.9	00.0	-7.8	-5.7	-4.8	-5.6	2.7	2.8	2.6	88	84	84	8.6	9.4	10.3	9.1	8.1	8.3	120.5	

$H = 904$ m, $H_b = 892.8$ m — $\varphi = 69^0\ 56'$ N

$C_g = 1.65$ mb bei 915 mb — **Mai.** — $\lambda = 22^0\ 56'$ E

Datum.	Luftdruck, 800 oder 900 + 8	2	7	Luft-Temperatur. Min.	8	2	7	Absolute Feuchtigkeit. 8	2	7	Relative Feuchtigk. 8	2	7	Richtung und Stärke des Windes. Meter Sekund. 8	2	7	Bewölkung. 8	2	7	Niederschl.	Bemerkungen.
1	08.2	03.0	00.6	**-10.2**	-8.8	-7.2	-7.9	**1.9**	2.5	2.3	80	92	91	E 12.5	E 13.9	E 11.9	10	10*	10*	0.0	∗⁰ n, a, p, ⦶ 8 a-5 p.
2	**95.9**	96.4	98.2	-9.1	-5.9	-4.7	-3.8	2.8	2.8	3.1	93	87	90	E 5.0	WNW 17.9	NW 25.0	10*	10*	10*	1.8	∗ n, ∗⁰, ⦶ a, p.
3	05.8	09.6	10.3	-5.9	-3.9	-3.8	-4.3	3.2	2.8	2.6	92	79	77	WNW 20.8	WNW 8.3	W 4.2	3	0	9	6.8	∗⁰ n, ⦶ 8-10 a, ⊕ 7 p.
4	04.0	00.6	99.8	-5.0	-2.2	0.5	-1.6	3.8	4.2	4.0	96	88	96	SSE 8.1	SW 12.5	WNW 13.9	10≡	9	10*	1.7	∗⁰, ≡ n, ⦶ 9-10 a, 3 p, ∗⁰ p.
5	02.7	07.2	09.0	-4.6	-4.6	-6.2	-6.9	3.1	2.4	2.5	94	84	92	NW 15.6	NW 11.9	NW 8.3	10*	10*	10*	3.2	∗⁰ n, ∗⁰, ⦶ a, p.
6	11.9	12.2	11.5	-7.4	-6.1	-5.4	-7.9	2.7	2.6	2.3	93	85	91	WNW 8.3	WNW 5.0	WNW 9.6	10*	9	10*	4.4	∗⁰ n, a, p, ⦶ 9 a-2 p, ⊕ 6-7 p.
7	12.7	13.8	13.2	-9.3	-8.4	-7.3	-7.9	2.0	2.3	2.0	82	87	79	WNW 5.0	NW 5.0	0.0	1	9*	0	2.6	∗⁰ n, a, ⦶ 9-10 a, ∗⁰ p.
8	08.4	08.6	09.1	-9.6	-7.5	-5.5	-6.2	2.3	2.4	2.3	89	76	79	SW 0.6	SW 0.8	SW 2.1	0	0	1	1.1	⦶ a, p.
9	07.2	05.6	04.3	-7.5	-3.2	2.6	2.4	2.6	4.1	3.8	71	74	70	SSW 14.7	SW 12.5	W 10.0	4	10●	10		●⁰, ⦶ a.
10	02.3	05.5	05.5	-3.2	3.1	2.5	0.6	4.1	4.3	4.5	71	79	95	W 8.9	W 3.3	SW 4.5	4	10●△	3	0.0	∗⁰, ●⁰, △⁰, ⦶ a, p.
11	07.4	09.9	10.0	-3.0	-2.7	-2.2	-2.9	3.6	3.4	3.1	96	87	83	NW 3.3	NW 5.0	NW 3.8	10≡	10	9	0.8	∗⁰, ≡⁰ n, a, ⦶ a, p.
12	07.2	05.5	03.9	-3.8	0.9	-0.2	-1.1	3.8	4.4	3.3	77	99	78	SW 8.3	SSW 12.5	S 15.6	8	10≡	9	0.6	≡, ⦶ a, p, ⊕ 2 p.
13	04.0	05.2	05.5	-1.7	-0.7	2.0	1.1	3.8	4.4	4.3	88	83	87		0.0 SSW 1.4	0.0	9	10	10*		⦶ a, p, ∗⁰ p.
14	05.4	07.0	07.6	-0.7	1.4	2.5	0.7	4.2	4.3	4.2	84	77	87	W 4.2	W 6.3	W 4.2	10	9	9	0.6	∗⁰ n, ⦶, ∗ a, p.
15	09.1	09.8	09.6	-1.8	-0.2	2.7	0.5	3.7	3.8	3.8	81	67	80	W 5.0	W 0.8	W 1.0	9	9	9	1.0	∗⁰ n, ⦶ a.
16	10.4	11.6	12.6	-0.8	0.6	1.3	-0.2	3.7	4.2	3.9	77	83	86	W 4.5	W 6.3	W 5.0	9	9	9	0.6	∗⁰ n, a, ⦶ a.
17	**15.2**	14.4	13.5	-1.1	1.1	2.5	4.0	4.3	3.9	2.1	87	70	35	W 2.5	SW 12.5	W 2.8	1	7	9	0.0	⊕ a, p.
18	05.5	05.8	02.7	1.1	8.6	4.5	0.1	5.1	3.6	4.1	61	58	88	SW 16.7	W 12.5	WNW 27.8	10	0	9		
19	08.0	09.6	09.0	-2.4	-2.1	-2.0	-3.6	3.8	3.7	2.8	96	92	81	NW 10.4	NW 8.9	NW 12.5	10*	10*	10	3.2	∗⁰ n, a, p.
20	06.7	06.0	06.2	-4.8	-3.9	-4.1	-5.1	3.2	3.1	2.9	92	92	92	WNW 2.8	NW 2.8	NW 4.0	10△	10≡	10≡	1.7	∗⁰ n, ≡⁰, ∗⁰, △⁰ a, ⦶ 12 a, ≡⁰, ∗⁰ p.
21	06.0	05.2	04.3	-5.7	-4.4	-6.4	-7.6	3.1	2.6	2.2	94	90	85	WNW 0.0	NNW 3.1	N 3.8	4≡	9*	10*	4.2	∗⁰ n, a, ≡⁰ a, ⦶ a, p, ∗⁰ p.
22	04.3	04.8	05.1	-9.5	-7.8	-7.3	-8.2	2.5	2.6	2.3	96	99	93	NE 8.3	NNE 9.6	NNE 10.0	10≡	10*	10*	2.2	∗⁰, ≡⁰ n, ⦶ a, p, ∗⁰ p.
23	05.8	05.9	05.8	-8.9	-7.8	-6.3	-7.9	2.0	2.5	2.2	79	86	86	N 5.0	NNW 3.6	NW 5.6	10	9	10*	2.8	∗⁰ n, a, p.
24	05.6	05.8	05.6	-8.4	-7.5	-5.6	-6.1	2.2	2.2	2.3	82	71	78	NW 5.0	0.0	NW 1.7	10*	10*	9	2.0	∗⁰ n, a.
25	03.6	03.8	04.3	-7.8	-4.6	-2.3	-4.7	2.4	3.4	2.5	73	87	79	WNW 5.0	WNW 7.1	NW 6.3	9	10*	2	0.0	∗⁰ a, p.
26	05.9	07.2	07.5	-6.2	-4.2	-2.8	-5.9	2.5	3.1	2.3	74	84	80	NW 4.2	NW 7.1	NW 4.2	8	9*	8*	0.6	∗⁰ a, p.
27	09.5	09.5	08.8	-7.7	-6.1	-3.2	-3.6	2.5	2.2	2.5	88	62	71	NW 3.3	N 3.6	ENE 12.5	10*	8	9	0.4	∗⁰ n.
28	06.4	06.0	06.3	-6.1	1.4	2.6	3.6	3.8	4.5	4.4	75	81	75	SSW 8.3	SW 19.2	SW 12.5	8	0	0		
29	04.2	06.3	07.4	1.4	3.8	7.5	6.5	4.9	4.8	5.6	82	62	79	W 12.5	0.0	W 2.3	9	10●	10		●⁰ a, p.
30	06.6	05.0	03.8	3.4	7.8	8.8	**8.9**	5.8	6.3	5.8	73	74	68	SW 9.7	S 19.2	S 21.1	0	9	9	0.0	⊕ 10 a-2 p, ⦶ 10^{30} a-3 p.
31	00.8	00.0	99.4	4.5	5.3	8.3	6.4	6.5	**7.3**	5.7	98	89	79	SSE 25.0	S 17.9	S 9.6	10≡	8	7		≡² a, ⦶ 8-9^{30} a, 9^{40} a-6 p, ⊕ 10^{30} a-7 p.
M.	06.3	06.7	06.5	-4.6	-2.2	-1.1	-2.2	3.4	3.6	3.3	84	81	82	7.6	8.1	7.8	7.6	8.2	8.1	42.3	

Juni.

Datum.	8	2	7	Min.	8	2	7	8	2	7	8	2	7	8	2	7	8	2	7	Niederschl.	Bemerkungen.
1	98.8	00.6	02.3	4.7	5.0	8.1	4.9	6.4	6.2	6.0	98	77	95	S 0.0	S 0.0	WSW 1.7	10	10	10●		≡ mg., p, ⊕ 2^{15}-2^{45} p, ⦶ 4-5 p.
2	05.8	07.6	08.3	1.8	2.4	5.8	2.1	5.2	6.1	4.9	94	89	92	NW 5.6	WNW 5.0	WNW 3.6	10	10●	10	0.2	●⁰ n, a, ⦶ a.
3	09.2	09.9	09.9	1.5	2.9	4.5	3.1	**3.6**	3.8	3.7	65	61	65	NW 2.8	NNW 2.1	N 1.6	10	9	9	0.0	⦶ 4^{30} p, ⊕ 4^{45} p.
4	11.9	13.1	13.6	2.6	3.6	3.4	1.8	4.4	4.6	4.3	75	78	82	NNW 2.8	N 3.1	NW 6.3	9	10*	10		∗⁰ sch. a, ⦶ 11 a.
5	15.6	17.1	17.1	-0.5	0.6	1.8	1.5	4.6	4.9	4.8	96	93	93	NW 7.1	NW 3.8	NW 2.8	10*	10	10	0.2	∗⁰ n, a, ⦶ a, ∗⁰ p.
6	15.2	14.8	14.2	0.5	4.6	7.2	5.1	4.3	4.1	5.6	68	54	87	W 4.2	WSW 6.3	W 8.3	10	10	10●	0.8	⊕ 8 a, ●⁰ p.
7	10.8	09.5	09.5	4.4	5.5	8.1	5.3	6.0	6.2	6.3	89	77	96	SW 7.8	SW 5.6	WSW 8.3	10	10●	10●	0.8	●⁰ n, a, p.
8	13.9	15.8	15.1	0.9	2.8	2.8	2.6	5.1	5.0	4.5	92	89	81	WNW 10.0	W 8.3	W 7.1	10	10	10≡	0.6	≡⁰, ●⁰ n, ●⁰ p.
9	10.3	11.0	12.3	2.1	2.2	3.0	2.6	5.2	5.5	5.2	96	96	95	W 16.7	W 16.7	WNW 12.5	10●	10≡	10●	0.3	≡², ●⁰ n, a, p.
10	13.9	15.6	15.1	1.8	2.7	2.7	3.0	5.3	5.4	5.5	95	96	96	W 10.0	NW 4.5	WNW 1.7	10≡	10≡	10≡	0.2	≡ ●⁰ n, a, ⦶ 8^{30} a, ≡, ●⁰ p.
11	06.3	04.4	02.2	1.8	3.2	6.0	2.7	5.2	4.9	5.3	90	71	95	SW 8.3	W 10.0	W 2.8	10●	6	10≡	1.8	● n, ⦶ 11 a, ≡⁰, ●⁰ p.
12	96.8	97.1	97.6	0.5	2.5	2.4	0.8	5.2	5.2	4.6	95	95	95	SW 1.9	W 6.3	W 5.6	10●	10●	10≡	6.4	● n, ●⁰ a, ∗⁰, ●⁰, ≡⁰ p.
13	96.6	94.8	92.8	0.2	1.8	5.6	3.5	5.1	4.4	5.0	96	65	85	SW 5.6	SSW 4.2	SSE 8.3	10●	9	10●△	8.8	●⁰ n, ●⁰, △⁰ p.
14	**91.9**	93.5	94.6	-0.2	4.2	5.9	5.2	4.2	4.0	4.1	68	57	62	SE 12.5	SSE 8.6	SSE 13.2	9	10	8	0.0	●⁰ n, ⦶ 8 a, ⊕ 7 p.
15	97.0	97.0	96.4	2.7	5.1	6.6	4.5	4.0	4.7	4.8	61	65	76	S 10.0	S 6.3	S 4.2	10	10●	4	0.0	●⁰ n, a, ⦶ 9 a, ⊕ 10^{30} a.
16	92.0	92.3	92.2	3.2	3.8	3.5	3.9	4.6	5.4	5.9	77	92	97	S 16.7	SSE 12.5	SSE 7.1	10	10●	10●	0.0	●⁰ a, ≡² ● p.
17	93.9	96.2	97.9	2.5	2.5	3.5	3.1	5.3	5.6	5.5	97	96	96	SSE 2.8	SSE 2.8	SE 5.6	10≡	10≡	10≡	5.8	● ≡⁰ n, ●⁰ a, ≡⁰ a, p.
18	01.0	02.4	03.1	0.4	1.4	4.7	3.5	4.5	4.8	4.3	90	75	74	SSE 2.8	SE 5.0	SE 5.0	10	3	9	0.0	⊕ 8 a.
19	03.9	04.2	04.2	1.3	5.2	6.1	4.7	4.8	4.2	4.4	73	61	69	SE 4.4	SE 7.1	SE 6.3	10	3	7		
20	05.6	06.8	07.8	0.8	1.9	6.2	4.1	4.2	4.3	3.9	80	61	64	SE 6.3	SE 6.3	ESE 7.6	10	9	9		
21	08.8	09.8	10.0	**-0.6**	2.5	5.2	4.0	3.9	4.1	3.9	70	61	65	SE 6.3	SE 5.6	ESE 5.6	4	5	2		
22	10.4	11.1	11.0	1.4	6.2	10.5	9.6	4.7	3.8	4.0	66	40	45	S 10.0	S 6.3	SE 2.5	3	4	8		
23	11.5	11.8	12.0	6.2	**11.2**	10.5	5.8	5.3	5.1	6.1	53	54	89	SSE 2.8	NNW 4.2	N 8.3	4	3	9		
24	10.8	10.6	09.8	3.4	3.5	3.4	2.4	5.6	5.5	5.3	96	96	96	N 3.8	N 5.6	NNW 5.6	10●	10●	10●	2.9	≡² ● n, a, p.
25	04.4	99.5	97.9	2.1	4.1	3.0	3.2	5.8	5.5	5.5	95	96	96	NE 5.0	NE 16.7	NE 8.3	10●	10●	10●	8.4	≡² ● n, a, p.
26	94.4	94.3	93.4	3.1	4.6	6.7	5.4	6.2	**6.9**	5.7	98	95	85	NE 4.2	S 10.0	SSW 14.7	10●	10●	10	7.9	≡² ● n, ≡⁰ ●⁰ a, p.
27	98.2	01.6	03.4	0.2	0.6	1.2	0.6	4.4	4.7	4.7	90	90	98	W 12.5	W 7.1	W 8.3	10●	10	10●	0.2	●⁰ n, ≡ ●⁰ p.
28	06.6	08.8	10.0	0.3	0.5	2.0	1.1	4.6	4.7	4.8	96	89	96	WNW 4.5	NW 5.6	NW 4.5	10●	10●	10●	1.8	∗⁰, △⁰, ●⁰ n, ●⁰ a, ⦶ a, p, ∗⁰, △⁰, ●⁰ p.
29	13.0	15.0	16.0	-0.1	0.4	2.2	1.7	4.6	5.1	4.7	96	95	92	W 7.1	W 5.6	W 5.6	10●	10	10	0.2	≡⁰ ●⁰ n, ⦶ a.
30	17.9	19.1	**19.8**	0.4	5.5	7.5	6.8	5.5	5.7	5.6	82	73	76	WSW 6.3	WSW 1.9	0.0	10	6	0		⦶ a.
M.	05.5	06.2	06.3	1.6	3.4	5.0	3.6	4.9	5.0	5.0	85	78	84	6.7	6.4	6.1	9.3	8.6	8.8	47.3	

$H = 904$ m, $H_b = 892.8$ m — $\varphi = 69^0\ 56'$ N

$C_g = 1.65$ mb bei 915 mb — $\lambda = 22^0\ 56'$ E

Juli.

Datum.	Luftdruck. 800 oder 900 + 8	2	7	Luft-Temperatur. Min.	8	2	7	Absolute Feuchtigkeit. 8	2	7	Relative Feuchtigk 8	2	7	Richtung und Stärke des Windes. Meter/Sekund. 8	2	7	Bewölkung. 8	2	7	Niederschl.	Bemerkungen.
1	20.0	20.8	20.8	5.5	10.9	13.9	12.4	6.4	5.6	5.1	65	48	48	SW 1.7	WNW 4.2	W 4.5	0	1	0		
2	21.0	**21.5**	21.4	10.4	16.5	17.4	15.7	6.6	5.2	5.5	48	35	41	W 3.6	W 2.5	W 3.8	9	3	3		
3	21.2	**21.5**	21.2	13.8	15.4	13.8	11.9	7.1	6.3	6.2	55	54	61	N 1.3	N 3.3	NNW 1.6	3	1	3		
4	20.8	20.6	20.0	7.6	9.7	14.3	14.0	7.0	7.7	7.5	77	63	63	E 4.2	ESE 4.2	SE 2.1	2	0	0		
5	17.4	16.0	13.6	8.9	16.0	**21.8**	19.2	8.7	7.3	6.9	64	38	42	S 5.0	S 7.8	SSW 13.2	2	1	4		
6	10.6	10.0	09.8	16.0	21.0	18.9	17.0	9.0	8.1	9.6	49	50	67	S 1.3	WNW 4.2	WSW 1.0	1	9	8		
7	09.0	07.9	06.7	14.3	15.4	16.5	14.8	11.0	11.8	**12.1**	85	84	97	S 6.3	E 5.6	S 8.3	10	9•	9≡		◉⁰ a, p, ≡⁰ p.
8	07.0	07.6	07.2	11.3	12.1	12.9	13.1	10.1	10.0	9.4	97	92	85	NNE 2.1	0.0	SW 1.7	10•	10≡	2	10.2	≡⁰, ◉ n, ≡² a.
9	05.9	06.7	07.0	11.4	17.0	21.6	16.2	10.6	9.2	9.1	74	48	66	SSW 16.7	SSW 8.3	NE 3.3	1	9	10•		◉⁰ p.
10	06.0	05.2	04.4	14.6	18.5	21.2	17.5	10.9	9.1	10.8	69	49	72	S 4.2	SSE 7.1	ESE 5.6	7	8	7•	0.0	● p.
11	01.5	01.2	02.8	11.4	13.0	16.0	12.9	10.1	7.8	8.6	91	57	78	SE 12.5	SW 15.6	SW 12.5	10	8	9	5.0	● n.
12	07.2	09.8	13.8	4.4	4.6	5.4	4.4	6.2	6.3	5.8	98	95	95	NW 7.1	NW 3.6	NW 3.8	10≡	10≡	10	0.6	≡, ◉⁰ n, ◉⁰ p.
13	12.8	15.1	16.7	3.5	7.0	7.0	6.2	6.4	7.0	5.6	86	95	79	W 1.6	W 3.8	WNW 16.7	10	10≡	9	1.1	◉⁰ n, a, ≡ a, ◉⁰ p.
14	19.6	20.2	19.9	4.8	5.8	7.7	7.7	6.1	5.4	5.4	89	70	70	WNW 10.0	SW 0.8	N 3.6	10≡	10	8	0.0	≡⁰, ◉⁰ a.
15	17.5	17.1	16.4	5.6	11.2	15.6	12.1	6.9	7.0	7.3	69	53	70	SW 12.5	S 8.3	S 8.3	10	9	10		
16	15.0	14.4	14.6	10.7	13.7	15.9	14.4	8.7	6.6	7.4	74	49	60	S 10.0	SSW 12.5	S 10.0	7	9	9	1.2	◉⁰ n.
17	15.0	14.4	14.0	12.0	14.9	17.8	15.0	7.2	7.3	8.0	57	49	63	S 8.3	S 10.0	S 2.8	4	7	9		◉⁰ p.
18	12.0	12.2	12.3	13.5	16.1	16.3	14.6	7.1	7.1	8.5	53	52	69	SW 13.2	WSW 10.0	0.0	1	10	9	0.0	◉⁰ p.
19	11.1	11.9	12.7	10.1	11.9	10.7	7.3	9.0	9.1	7.4	87	95	98	W 1.7	WNW 2.8	N 2.1	9≡	10•	10≡	0.2	≡ ◉⁰ n, a, p.
20	14.6	15.1	15.2	6.2	8.8	14.0	13.8	7.6	6.5	7.9	91	55	67	SW 4.2	W 5.6	W 2.8	10•	9	9	1.8	≡⁰, ◉ n, a.
21	15.9	16.0	16.2	8.8	14.3	18.8	13.7	7.9	7.5	7.0	65	47	60	W 16.7	W 16.7	W 20.8	8	10	3		
22	14.6	14.0	13.6	12.3	13.7	16.5	14.8	7.0	8.1	8.3	60	58	66	SW 12.5	W 10.0	W 10.0	10	10	10	0.0	◉⁰ n.
23	12.0	10.7	06.6	12.4	13.8	15.9	11.8	6.5	5.2	6.3	56	39	61	W 8.3	SW 5.0	S 5.6	7	10	10		◉⁰ p.
24	03.9	03.0	03.5	5.7	7.0	6.3	2.7	4.3	4.6	5.1	58	65	92	W 12.5	WSW 16.7	WNW 16.7	5	5	10	0.2	◉⁰ n, a, p.
25	07.1	12.3	14.6	0.4	0.9	5.1	2.3	4.5	**4.0**	4.4	91	62	80	WNW 25.0	W 25.0	NW 10.0	10•	9•	10×	0.0	◉⁰, ✱⁰ n, a, p.
26	10.2	06.0	03.9	1.0	4.1	12.9	13.6	5.0	6.7	7.6	83	61	66	S 20.8	SW 20.8	SW 19.2	8	7	3	0.0	⊕ 8 a - 2 p.
27	**00.6**	03.2	03.8	4.1	9.5	5.8	4.8	8.3	6.7	6.1	94	98	96	W 14.7	WNW 2.8	WNW 4.2	10•	10•	10≡	0.0	◉⁰ n, a, ≡⁰ a, ◉⁰, ≡² p.
28	01.5	03.6	04.6	4.2	5.8	4.6	2.2	6.6	5.8	4.9	96	92	92	W 6.3	NW 4.2	NNE 7.1	10•	10•	10	11.0	◉ n, a, ≡ a, ◉⁰, ≡⁰ p.
29	05.0	06.0	06.4	**0.3**	1.8	1.9	2.2	5.1	5.1	4.9	96	96	92	E 6.6	E 7.1	E 8.3	10•	10•	10	0.8	≡, ◉⁰ n, a.
30	04.3	03.1	02.3	0.5	1.3	3.8	5.3	5.0	5.7	6.3	98	96	96	SE 16.7	SE 8.3	S 6.6	10•	10•	10•	2.8	≡², ◉ n, ≡², ◉⁰ a, p.
31	00.8	01.8	01.6	1.3	8.3	10.7	10.0	6.7	8.1	8.7	90	86	95	S 10.0	S 6.3	SSE 7.1	10•	10	10	1.1	≡⁰, ◉⁰ n, a.
M.	11.0	11.2	11.2	8.0	11.0	12.9	11.1	7.4	7.0	7.2	76	66	74	8.7	7.6	7.1	7.2	7.9	7.6	36.0	

August.

Datum.	Luftdruck. 800 oder 900 + 8	2	7	Luft-Temperatur. Min.	8	2	7	Absolute Feuchtigkeit. 8	2	7	Relative Feuchtigk 8	2	7	Richtung und Stärke des Windes. Meter/Sekund. 8	2	7	Bewölkung. 8	2	7	Niederschl.	Bemerkungen.
1	01.8	02.4	02.4	8.2	8.6	9.0	7.0	8.1	8.3	7.2	98	97	96	SSE 2.8	SE 3.8	ESE 5.6	10≡	10≡	10≡	0.0	≡² a, p.
2	03.6	04.3	04.8	3.9	4.2	3.9	2.9	5.9	6.0	5.5	96	98	98	E 2.9	ENE 5.6	ENE 8.3	10•	10•	10•	1.1	≡, ◉⁰ n, a, p.
3	05.4	05.1	04.8	-0.4	0.0	2.9	2.3	4.5	5.0	5.2	98	88	96	ENE 5.6	NE 5.6	ENE 6.3	10•	10	10•	1.4	≡⁰, ◉⁰ n, p.
4	04.2	04.2	04.0	0.0	1.8	3.8	3.9	5.2	5.9	6.0	98	98	98	ESE 8.3	SE 8.3	SE 7.8	10•	10•	10•	4.2	≡⁰, ◉ n, a, ≡⁰, ◉⁰ p.
5	04.4	04.6	04.3	1.8	5.4	6.6	6.9	6.5	7.0	7.1	98	96	96	SSE 5.6	SE 0.6	SE 0.8	10•	10≡	10≡	3.9	≡⁰, ◉⁰ n, a, ≡⁰ p.
6	03.6	05.0	06.4	5.4	7.0	7.6	6.0	7.2	6.8	6.3	96	88	90	SE 0.3	ENE 0.3	NE 0.0	10≡	9	9	0.2	≡⁰ a.
7	07.5	09.1	09.2	3.2	8.3	9.9	7.8	5.3	4.3	4.2	65	47	55	NE 0.0	N 0.5	NE 1.3	1	0	0		⊕ 7 p.
8	09.0	10.0	10.0	6.4	10.5	11.4	8.7	5.5	6.8	7.0	58	68	84	W 6.8	W 8.3	W 3.3	4	5	10•		⊕ 8 a, ◐ 2 p, ◉⁰ p.
9	11.9	13.2	13.0	4.9	7.0	11.8	9.7	5.6	4.3	6.2	75	43	69	W 6.6	W 5.6	W 0.6	6	0	0	0.0	◉⁰ n, ◐ 2 p.
10	10.2	08.2	06.6	7.0	13.6	**16.0**	12.5	7.7	6.3	7.9	67	46	73	SW 7.8	S 17.9	S 19.2	0	8	10		⊕ 2 p.
11	00.8	98.7	98.4	8.3	9.6	9.5	8.7	7.0	8.4	8.1	79	95	97	S 20.8	S 13.2	WNW 8.3	10•	10•	10≡	0.0	◉ n, ≡, ◉ a, p.
12	01.1	02.7	04.8	7.1	8.7	12.7	8.5	5.8	6.3	7.4	69	58	89	SW 7.1	W 7.6	WNW 4.5	3	6	9•	0.1	≡⁰, ◉⁰ n, ⊕ 8 a, ◐ 2 p, ≡⁰, ◉⁰ p, △ 5⁴⁰ p.
13	09.2	10.0	09.1	5.8	7.6	9.8	8.6	5.3	4.9	5.1	68	55	62	W 6.8	W 5.6	SSE 2.8	8	2	10	4.1	◉⁰ n.
14	05.0	05.5	07.0	6.8	9.0	9.6	8.0	7.3	8.1	7.6	86	91	95	SSW 0.0	NW 3.6	NW 4.2	10•	10•	10≡	0.0	◉⁰ n, a, ≡⁰ a, p.
15	06.8	07.2	07.6	4.6	4.6	5.8	5.9	6.2	6.7	6.7	98	98	98	NE 4.2	NE 1.4	SE 3.2	10•	10•	10•	5.7	≡⁰, ◉ n, a, p.
16	08.6	08.6	07.8	4.6	6.4	7.7	7.2	6.9	7.5	7.3	96	96	96	SE 5.6	SE 0.8	NE 5.6	10≡	10•	10•	4.2	◉⁰ n, a, ≡ a, ◉⁰, ≡⁰ p.
17	04.7	04.3	03.9	5.9	6.0	7.0	9.2	6.8	7.2	8.4	98	96	98	NE 0.7	NE 0.8	0.0	10•	10•	10•	8.7	◉ n, ≡ a, ◉⁰ a, p.
18	03.9	05.0	05.5	5.9	7.0	5.7	4.6	7.2	6.5	6.2	96	96	98	N 5.6	N 10.0	N 8.3	10•	10•	10•	10.3	◉ n, a, ≡ a, p, ◉⁰ p.
19	06.3	06.7	07.1	2.6	2.7	3.0	1.5	5.3	5.6	5.0	95	98	98	NNE 5.6	NNE 7.1	N 8.3	10•	10•	10•	5.4	◉ n, ≡⁰, ◉⁰ a, p.
20	09.2	09.9	10.4	-0.5	0.2	2.0	1.0	4.6	5.1	4.6	98	97	93	N 5.6	N 2.8	NNE 1.8	10•	3	2	0.7	≡⁰, ◉⁰ n, a.
21	10.7	11.5	12.3	**-2.0**	-1.5	3.0	2.8	4.0	4.7	4.8	96	84	86	S 6.3	SSE 7.1	SSE 8.3	10≡	0	0	0.5	≡⁰ n.
22	12.4	12.8	13.2	-1.5	7.8	8.7	10.7	2.2	5.2	4.7	28	61	49	S 4.2	S 5.6	S 2.8	0	2	1		
23	14.8	15.6	15.8	7.0	10.8	13.0	11.1	4.6	4.9	5.2	47	44	53	WSW 0.6	SE 4.2	SE 2.9	0	1	0		
24	15.6	15.5	15.5	10.0	12.4	13.6	12.0	6.4	6.3	6.4	60	54	62	SSW 0.4	SSE 4.5	0.0	3	2	7		
25	14.8	15.1	14.7	11.0	12.1	14.3	12.5	6.6	**10.1**	7.2	63	84	67	SSW 4.2	S 4.2	S 1.7	9	7	9		
26	15.1	**15.9**	**15.9**	11.8	15.4	14.9	12.3	7.4	5.7	6.6	57	46	62	S 7.1	SSE 8.3	S 7.1	3	1	1		
27	15.1	15.1	15.1	9.8	11.1	13.0	10.9	6.4	6.5	6.4	64	58	65	SSW 16.7	S 16.7	S 8.3	1	1	2		
28	13.4	11.5	09.8	8.3	9.5	12.1	10.7	**1.5**	4.4	4.7	17	42	49	SW 8.3	S 20.8	S 15.6	2	2	5		
29	04.8	02.8	01.6	7.0	9.0	10.1	7.6	6.1	5.2	5.1	71	56	65	SW 16.7	S 20.8	S 22.8	7	9	6		◉⁰ sch. 6¹⁵ p.
30	99.1	99.1	99.1	5.7	5.9	9.7	7.3	6.1	5.2	6.0	88	58	79	SSE 10.0	S 7.1	S 6.8	8	7	9	0.0	◐ 2 p.
31	98.4	95.8	**92.0**	5.9	9.3	9.8	7.6	5.2	5.9	6.3	60	65	81	SSW 3.8	SSE 3.6	SSW 12.5	3	9	8		⊕ 8 a, ◉⁰ p.
M.	07.5	07.6	07.5	5.3	7.4	9.0	7.6	5.8	6.2	6.2	77	74	81	6.0	6.7	6.0	6.7	6.3	7.0	50.5	

$H = 904$ m, $H_b = 892.8$ m — $\varphi = 69^0\ 56'$ N

$C_g = 1.65$ mb bei 915 mb — $\lambda = 22^0\ 56'$ E

September.

Datum.	Luftdruck. 800 oder 900 + 8	2	7	Luft-Temperatur. Min.	8	2	7	Absolute Feuchtigkeit. 8	2	7	Relative Feuchtigk. 8	2	7	Richtung und Stärke des Windes. Meter Sekund. 8	2	7	Bewölkung. 8	2	7	Niederschl.	Bemerkungen.
1	85.1	85.0	85.2	5.5	5.5	4.8	3.9	6.5	5.9	5.0	97	92	82	SSE 5.6	S 12.5	S 8.3	10≡	10	10	0.3	◍⁰ n, a, ≡⁰ a.
2	83.0	81.9	**80.4**	3.1	4.2	6.2	**7.0**	6.1	6.9	**7.3**	98	98	98	NE 5.0	NE 10.0	ENE 10.0	10•≡	10•≡	10•≡	4.7	◍, ≡ n, a, p.
3	80.8	84.2	86.8	2.6	3.9	5.6	5.4	5.3	5.1	5.6	87	75	84	S 13.9	SE 13.5	SE 10.0	10≡	9	10	12.5	◍ n, ≡⁰ a, ◍⁰ p.
4	91.2	93.0	93.8	3.6	4.0	5.3	5.0	6.0	6.5	6.2	98	97	96	SE 9.3	ENE 12.5	ENE 9.3	10≡	10≡	10≡	0.0	◍⁰ n, a, ≡ a, ◍⁰ p.
5	91.5	91.9	93.6	4.0	4.4	5.8	4.2	6.0	6.7	6.1	97	97	98	N 12.5	ENE 16.7	E 11.9	10•≡	10•≡	10•≡	2.8	◍ n, a, ≡ a, p, ◍⁰ p.
6	97.5	98.6	98.8	3.8	4.3	5.2	4.6	6.1	6.4	6.2	98	97	98	E 6.3	E 2.8	E 4.3	10≡	10≡	10≡	7.1	◍ n, ◍⁰, ≡ a, p.
7	99.2	00.2	00.7	3.8	3.8	4.9	4.3	5.9	6.1	5.9	98	96	96	NE 7.1	NE 4.2	NE 7.1	10•≡	10•≡	10•≡	2.3	◍⁰ n, a, ≡ a, p, ◍ p.
8	02.7	04.2	05.6	3.2	3.2	3.9	3.3	5.5	5.7	5.5	96	96	96	NE 4.2	NE 1.5	ENE 4.2	10≡	10≡	10≡	2.3	◍⁰ n, a, ≡⁰ a, p.
9	07.0	07.9	07.9	3.0	3.8	3.4	2.6	5.9	5.5	5.3	98	96	96	SSE 2.8	SE 2.3	SE 2.8	10≡	10≡	10≡	3.5	◍ n, ≡ a, p.
10	09.4	10.7	11.0	1.4	1.6	2.1	1.3	5.1	5.2	5.0	98	96	98	SE 6.3	SE 2.8	SE 6.3	10•≡	10•≡	10•≡	1.8	◍⁰ n, ≡⁰, ◍⁰ a, p.
11	10.8	10.7	09.9	0.3	3.1	5.2	3.2	4.5	4.8	4.9	78	73	86	S 2.8	SSW 5.6	W 5.0	4	6	10	2.5	✱⁰, ≡⁰ n.
12	06.7	05.1	04.2	1.8	2.8	4.8	3.4	4.8	4.6	5.0	86	71	86	SW 4.8	WSW 8.3	W 9.3	10	4	9		◍⁰ a, p.
13	01.2	02.7	03.9	2.7	3.4	3.7	2.3	5.2	5.6	5.2	89	94	96	WNW 17.3	WNW 8.3	WNW 4.2	9	10•	10•≡	0.0	◍⁰ a, p, ≡⁰ p.
14	01.9	99.9	97.6	1.8	3.2	3.0	5.2	5.5	5.5	5.6	96	96	85	W 8.3	SSW 15.6	SW 14.7	10•≡	10	10	3.5	◍⁰ n, a, ≡⁰ a, ◍⁰ p.
15	97.5	01.6	03.4	2.7	5.4	5.9	3.9	6.4	6.7	5.2	96	98	85	W 10.0	WNW 17.9	NW 20.8	10≡	10≡	10	0.3	◍⁰ n, a, ≡⁰ a, ◍⁰ p.
16	07.0	08.8	10.3	1.3	1.3	1.8	-0.7	4.4	4.9	4.2	88	93	96	WNW 12.5	NW 12.5	NW 10.0	10	10	10	1.2	◍⁰ n, a, ✱⁰ p.
17	14.6	**15.4**	14.7	-1.5	-0.3	1.6	-0.5	3.5	4.2	4.0	78	82	91	NW 1.4	SSE 8.3	S 14.7	8	9	0	0.3	✱⁰ n.
18	12.2	12.6	11.5	-0.9	1.4	2.2	-0.3	3.9	4.2	3.6	77	79	82	SSW 25.0	S 22.8	S 20.8	0	3	0		
19	08.8	08.8	07.9	-2.4	-1.9	-1.0	-1.8	3.1	3.3	3.0	79	77	74	SSW 17.9	S 19.2	SW 16.7	2	2	1		
20	07.4	07.1	06.0	-2.6	-0.5	1.6	-0.6	**2.5**	3.4	3.2	57	65	73	0.0	SW 10.0	S 15.6	0	2	1		
21	01.2	00.8	98.7	-1.9	-0.8	-1.0	-0.9	4.2	4.0	4.2	98	94	98	S 20.8	S 20.8	SW 22.9	10	10	10≡		≡⁰ n, ≡ p.
22	96.6	95.1	93.2	-1.5	1.4	1.3	0.9	5.0	4.9	4.8	98	96	98	S 20.8	SE 10.0	SE 10.0	10≡	10≡	10≡	0.0	◍⁰, ≡² a, p.
23	91.5	94.6	93.9	0.0	1.1	2.3	3.0	4.7	5.1	5.2	95	95	92	SW 7.1	W 11.4	WNW 12.5	10	10	10	6.6	✱ n, ◍⁰ p.
24	91.9	93.2	93.9	0.6	0.6	3.1	2.8	4.6	5.1	5.4	96	90	96	SSW 7.1	S 13.9	S 16.7	10	8	9≡	0.0	≡⁰ p.
25	97.1	99.9	01.5	0.6	4.0	5.5	4.0	5.2	5.7	6.0	85	85	98	SSW 1.4	SSW 1.3	0.0	10	10	10	0.0	◍⁰ n, p.
26	02.4	02.4	02.4	2.9	3.0	4.7	3.4	5.0	5.8	5.5	89	90	95	NW 4.2	SE 1.4	SSE 1.0	10	8	10	0.0	◍⁰ n, a, p.
27	04.2	06.8	09.5	0.0	0.0	-0.6	-1.5	4.5	4.4	4.1	98	00	99	NNE 4.5	E 5.0	SE 4.2	10≡	10≡	10≡	2.1	✱ n, a, p.
28	11.1	10.8	08.0	**-3.7**	-2.7	0.6	-1.0	3.6	4.3	4.2	95	88	97	SSW 8.3	WSW 8.3	SW 16.7	4	1	10≡	5.5	✱⁰, ≡⁰ n, ≡⁰ p.
29	93.6	88.2	88.4	-2.7	0.0	0.7	2.8	4.5	4.7	4.4	98	96	77	S 20.8	SW 31.2	SW 25.0	10≡	10≡	1		≡⁰ n, ✱⁰ a, p.
30	96.0	98.3	98.6	0.0	0.4	1.4	1.2	4.3	3.9	4.6	90	77	91	W 16.7	SW 17.9	SW 14.7	3	9	6	0.0	✱⁰ n, a, ◍⁰ p.
M.	00.0	00.7	00.7	1.0	2.1	3.1	2.3	4.9	5.2	5.0	91	89	91	9.1	10.5	10.5	8.3	8.4	8.2	59.3	

Oktober.

Datum.	Luftdruck. 800 oder 900 + 8	2	7	Luft-Temperatur. Min.	8	2	7	Absolute Feuchtigkeit. 8	2	7	Relative Feuchtigk. 8	2	7	Richtung und Stärke des Windes. Meter Sekund. 8	2	7	Bewölkung. 8	2	7	Niederschl.	Bemerkungen.
1	88.4	88.3	85.1	0.1	2.7	2.9	0.6	4.1	3.8	3.1	74	67	64	SW 25.0	WSW 10.0	SW 12.5	8	10	8	0.0	
2	81.5	85.2	86.7	-2.2	-2.2	-2.8	-4.8	3.7	3.6	3.0	94	95	95	W 25.0	WNW 27.8	W 19.2	10	10	10*	1.8	✱ n, a, p.
3	79.4	77.9	76.3	-5.4	-3.0	-2.9	-3.0	3.3	3.7	3.0	88	00	81	W 11.4	SSE 5.0	S 7.8	4*	10≡	6	12.2	✱ n, a, ≡⁰ a, ✱⁰ p.
4	84.4	85.9	84.3	-5.2	-5.2	-5.7	-6.6	2.3	2.6	2.4	75	85	85	SW 7.8	W 13.2	W 11.4	9	0	6	2.8	✱⁰ n, ⊕ 11-12 a, 7 p, ⦶ 7 p.
5	85.0	88.6	90.2	-7.2	-4.5	-2.9	-3.1	3.1	3.6	3.5	94	95	95	WNW 16.7	WNW 10.0	WNW 10.0	10*	10*	10*	1.6	✱ n, a, p.
6	88.0	90.3	90.7	-4.8	-4.0	-3.7	-4.4	3.2	3.3	3.2	95	95	97	WNW 12.5	NW 5.6	N 4.2	10	10≡	10≡	12.1	✱² n, a, ✱⁰, ≡⁰ p.
7	92.7	94.3	95.0	-5.3	-5.1	-5.3	-5.7	2.9	2.7	2.7	92	86	91	WNW 4.2	NW 10.0	NW 11.4	10≡	10	5	9.4	✱ n, ≡⁰ n, a, ✱⁰ a, p.
8	97.8	96.6	93.2	-5.8	-5.3	-5.1	-6.4	3.0	3.0	2.6	96	96	90	NW 3.3	W 16.7	W 12.5	10*	10*	2	3.6	✱, ≡⁰ n, ✱ a, p.
9	70.8	71.2	68.8	-6.7	-3.0	-4.9	-5.2	3.5	2.9	2.9	95	92	94	W 20.8	W 20.8	NW 10.0	10*	5*	10*	9.2	✱ n, a, p.
10	**66.2**	66.4	69.4	-7.9	-7.0	-5.8	-6.8	2.5	2.8	2.6	92	93	93	W 27.8	NW 20.8	NW 16.7	10	10*	10*	22.1	✱² n, a, p.
11	78.7	82.8	83.9	-7.2	-6.9	-6.4	-6.8	2.6	2.6	2.6	94	91	96	NW 16.7	NW 8.6	NW 4.2	10	10*	10*	57.2	✱² n, a, ✱⁰ p, ⊕ 1 p.
12	85.6	88.0	89.9	-7.8	-6.4	-7.1	-8.0	2.6	2.2	2.1	93	79	82	NW 7.8	0.0	0.0	0*	2	0	6.9	✱⁰ n, ⊕ 8 a.
13	95.0	97.6	99.4	-8.2	-7.6	-6.7	-6.9	2.5	2.7	2.6	97	96	96	NE 3.2	NE 1.7	NE 2.1	10*	10*≡	10*≡	0.0	✱⁰, ≡⁰ n, a, p.
14	00.0	00.3	00.3	-7.6	-6.9	-7.6	-7.8	2.1	2.1	2.3	76	82	91	E 1.7	0.0	0.0	9	2	0	0.0	≡⁰ n.
15	99.2	99.0	98.4	-7.9	-7.7	-8.3	-8.5	2.3	2.4	2.4	89	96	98	0.0	NE 2.5	NE 2.1	7	10≡	10≡		≡⁰ a, p.
16	95.9	96.0	95.8	-8.9	-5.7	-6.0	-6.4	2.8	2.8	2.6	93	95	93	N 5.6	N 10.0	NW 5.0	10≡	10≡	10		≡⁰ n, a.
17	95.4	96.2	96.8	-7.7	-7.6	-8.8	-9.0	2.4	2.2	2.2	91	93	93	NW 2.8	NW 5.6	WNW 4.2	10*	4	0	9.3	✱ n, ✱⁰ a, ♖⁰ 7 p.
18	98.7	00.7	01.0	-9.5	-8.6	-7.6	-7.8	2.2	2.0	1.7	90	75	65	WNW 5.6	0.0	0.0	2	3	0	0.8	⊕ 8 a.
19	98.6	96.4	94.4	-8.8	-7.2	-7.6	-6.8	2.1	1.9	2.0	76	72	72	W 10.0	W 14.7	W 14.7	2	8	3		⊕ 2 p.
20	88.6	88.7	89.6	-7.8	-5.0	-6.3	-6.9	2.2	2.3	2.5	69	78	88	W 5.6	0.0	0.0	9	8	6		♖⁰ 7 p.
21	94.3	97.5	00.0	-7.4	-5.4	-6.7	-6.5	1.7	2.0	2.5	55	71	90	0.0	W 2.8	W 5.0	1	0	0		♖⁰ 7 p.
22	00.6	98.8	97.6	-6.8	-5.9	-4.2	-5.2	2.3	1.6	**1.5**	76	46	49	S 7.1	0.0	0.0	0	0	0		♖² 7 p.
23	95.0	93.4	91.5	-9.1	-8.3	-7.4	-6.8	2.2	2.4	2.6	91	92	92	SW 6.3	SSW 27.8	SSW 20.8	2	9	5		
24	90.4	89.9	90.0	-8.3	-3.6	-0.4	1.2	2.7	2.7	3.0	75	61	61	SW 2.8	SW 1.4	W 1.7	2	9	3		≡ n.
25	87.2	90.4	90.6	-5.0	**4.7**	2.5	-0.1	**5.0**	4.6	4.4	78	84	95	SW 31.2	0.0	NW 2.1	9	8	3		
26	96.2	97.8	99.0	-0.9	2.7	0.4	-2.0	4.3	4.4	3.9	78	93	98	NW 3.1	NNE 4.5	SE 6.3	10	9	10≡		≡ p.
27	04.8	07.1	07.8	-3.8	-3.8	-5.5	-6.2	3.3	2.9	2.8	94	94	97	E 5.6	SE 5.6	SE 8.3	10*≡	10*≡	10≡	3.0	✱, ≡⁰ n, ✱⁰, ≡⁰ a, ≡⁰ p.
28	05.6	02.8	01.5	-7.8	-7.8	-8.4	-8.4	2.4	2.2	2.2	93	91	91	SE 7.1	SE 7.1	SE 8.3	10	10	10	2.1	≡⁰ n.
29	01.8	03.5	05.2	-9.4	-9.2	-10.2	-9.2	2.1	2.0	2.2	90	95	95	NE 8.3	NNE 6.3	NNE 2.8	10≡	10≡	9*		≡⁰ n, a, ✱⁰ p.
30	05.0	06.3	09.0	-10.2	-9.6	-8.8	-9.2	1.9	2.1	2.1	87	90	90	NW 6.3	NW 2.1	N 4.5	10	10*	5	7.0	✱ n, ✱⁰ a, p, ♆ 7 p.
31	15.0	17.0	**21.0**	**-10.3**	-7.2	-7.2	-8.0	2.4	2.5	2.4	90	92	93	NW 8.3	NNW 19.2	NNE 8.3	10	10*	10*	2.3	✱⁰ n, a, p.
M.	92.4	93.4	93.6	-6.8	-5.2	-5.3	-5.8	2.8	2.7	2.6	86	86	87	8.8	7.8	6.9	7.6	7.6	6.2	163.4	

$H = 904$ m, $H_b = 892.8$ m — $\varphi = 69^0\ 56'$ N

$C_g = 1.65$ mb bei 915 mb — $\lambda = 22^0\ 56'$ E

November.

Datum.	Luftdruck. 800 oder 900 + 8	2	7	Luft-Temperatur. Min.	8	2	7	Absolute Feuchtigkeit. 8	2	7	Relative Feuchtigk. 8	2	7	Richtung und Stärke des Windes. Meter/Sekund. 8	2	7	Bewölkung. 8	2	7	Niederschl.	Bemerkungen.
1	25.5	**25.9**	25.1	-8.3	-8.0	-7.3	-7.4	2.1	2.2	2.2	86	83	81	NNW 3.6	NW 2.1	NNW 3.8	10	10	10	3.5	✱⁰ n.
2	18.2	15.1	12.4	-8.1	-8.1	-7.6	-6.6	2.3	2.5	2.5	91	96	90	NNW 5.0	N 4.2	NNW 4.2	10	10	10		⦶ 8 a.
3	06.6	04.3	00.8	-8.2	-6.5	-6.6	-7.0	2.5	2.5	2.4	88	90	90	WNW 8.3	W 7.8	W 8.3	10	10	9		≡⁰ n.
4	91.5	90.2	89.1	-7.6	-6.6	-6.9	-7.0	2.4	2.5	2.5	88	92	92	W 16.7	W 8.3	NW 3.6	10	10×	4≡		✱⁰, ≡⁰ a, p, Ψ p.
5	88.0	88.6	89.9	-8.9	-8.9	-7.6	-6.9	2.2	2.5	2.5	93	94	92	0.0	N 4.2	NNE 4.2	10	10≡	10*≡	0.0	✱⁰, ≡⁰ n, a p.
6	93.1	94.3	95.4	-9.7	-9.7	-10.9	-9.6	2.1	1.7	2.0	93	86	90	NE 5.6	N 5.6	NE 2.5	10×	3	5	6.0	✱, ≡⁰ n, ✱⁰, ≡⁰ a.
7	93.5	92.2	90.7	-11.0	-10.2	-11.3	-10.5	2.0	1.8	1.9	92	91	91	NNW 3.8	NW 3.6	NW 5.0	10*≡	3	10×	0.9	✱⁰ n, a, p.
8	90.0	90.4	89.8	-12.1	-11.5	-11.5	-12.2	1.8	1.7	1.5	91	86	82	NW 2.5	NW 3.1	0.0	10×	9	0	1.8	✱⁰ n, a, ⦶ 8 a.
9	91.8	92.7	93.4	-12.2	-9.0	-7.6	-7.4	1.9	1.4	1.4	81	54	52	W 4.2	SSW 7.1	W 10.0	2	7	0	0.6	Ψ² 7 p.
10	94.2	96.2	97.1	-11.9	-11.9	-9.8	-9.3	0.9	1.3	1.6	47	58	68	W 8.3	W 6.3	W 8.3	2	9	0		Ψ 7 p.
11	99.4	97.1	95.3	-12.1	-8.6	-8.3	-6.8	1.8	1.4	1.7	75	58	62	WNW 12.5	WSW 16.7	WNW 16.7	2	10	2		
12	93.9	90.0	91.1	-9.4	-5.5	-1.8	-0.8	2.9	4.0	4.3	94	99	00	S 5.6	W 12.5	WNW 12.5	10×	10×	10×	3.0	✱⁰ n, a, p.
13	98.0	00.8	03.4	-5.5	-0.4	-0.2	-1.0	**4.5**	4.3	3.5	00	96	82	SW 12.5	W 20.8	W 12.5	10×	9*	4	0.6	✱⁰ a, p, Ψ⁰ 7 p.
14	04.3	02.2	01.0	-1.3	-0.7	**-0.1**	-1.6	3.0	3.1	3.3	68	67	82	W 8.3	WSW 8.1	W 4.1	10	10	0	0.8	Ψ⁰ 7 p.
15	99.5	00.8	04.4	-2.8	-1.8	-1.8	-2.0	3.3	3.9	3.8	83	96	96	W 19.2	W 23.4	WNW 10.0	9	10×	10*≡		✱, ≡⁰ a, p.
16	08.2	05.6	03.0	-2.5	-2.4	-3.5	-3.5	2.9	2.9	2.6	76	80	74	SE 0.0	S 8.3	SSW 13.9	8	10	4	13.6	✱, ≡⁰ n.
17	03.1	05.4	06.0	-4.7	-4.2	-5.2	-5.9	3.2	2.4	2.8	94	77	93	WNW 10.0	W 10.0	WNW 27.8	10	6	2	0.5	✱⁰ n, ✱ p.
18	96.7	90.3	84.7	-7.4	-4.0	-2.8	-3.8	3.2	3.6	3.3	94	97	95	SW 20.8	S 10.0	W 29.4	10×	10≡	10×	7.2	✱⁰ n, a, ≡⁰ a, ✱ p.
19	83.8	82.8	82.7	-5.6	-5.6	-5.7	-6.6	2.7	2.9	2.6	92	95	92	WNW 20.8	WNW 16.7	NW 12.5	10×	10×	10×	45.0	✱ n, a, p.
20	85.8	89.1	92.0	-7.2	-6.3	-10.0	-11.3	2.8	1.9	1.7	95	90	89	WNW 10.0	NE 8.3	NE 6.3	10×	10*≡	10*≡	7.3	✱⁰, ≡⁰ n, a, p.
21	92.0	93.0	93.0	-11.8	-11.7	-12.7	-12.4	1.6	1.6	1.5	88	88	88	NNW 8.3	NNW 9.3	NW 20.8	10*≡	9	10×	2.4	✱⁰ n, a, p.
22	93.6	90.3	87.2	-13.0	-10.2	-9.8	-8.1	1.9	1.9	2.2	87	87	89	WNW 19.2	W 22.8	W 20.8	6	9	6	7.4	✱ n.
23	88.0	87.9	86.8	-10.4	-9.0	-10.6	-11.5	2.1	1.8	1.7	91	89	86	WNW 10.0	NW 10.0	W 7.1	10×	10	5	6.3	✱ n.
24	**80.7**	81.0	82.3	-13.1	-12.9	-15.3	-14.9	1.5	1.2	1.3	88	85	90	S 12.5	SE 6.3	SSE 3.1	2	5≡	0	0.7	≡ a, Ψ 7 p.
25	87.0	89.2	89.0	-16.8	-16.2	-14.9	-15.2	1.1	1.3	1.1	89	90	79	S 12.5	S 10.0	S 6.3	2	2	0		≡⁰ n, a.
26	87.1	89.2	92.0	-16.2	-10.8	-10.6	-10.4	1.6	1.4	1.5	80	67	69	W 20.8	W 16.7	WSW 6.3	2	9	0		Ψ 7 p.
27	95.2	97.0	00.6	-14.7	-14.7	-14.7	-14.2	1.2	1.2	1.0	80	79	66	SW 25.0	SW 31.2	SW 25.0	2	0	2		
28	04.2	04.2	03.6	-16.0	-15.4	-17.6	-13.9	1.1	1.0	**0.6**	79	88	40	S 15.6	S 12.5	S 5.0	8	0	0		≡⁰ a.
29	00.2	99.8	98.8	**-17.7**	-14.8	-12.5	-12.4	0.7	1.6	1.6	46	90	91	N 6.3	N 6.3	NW 7.1	0	0	5		✱⁰, ≡⁰ p.
30	94.6	93.2	92.6	-15.0	-10.4	-11.8	-12.7	1.9	1.6	1.6	90	88	88	NW 8.3	NNW 14.4	NW 5.6	10×	9	3	4.0	✱ n, a, ≡⁰ a.
M.	96.3	96.0	95.8	-10.0	-8.5	-8.6	-8.4	2.2	2.2	2.1	85	84	83	10.2	10.3	9.3	7.5	7.6	5.0	111.6	

December.

Datum.	Luftdruck. 800 oder 900 + 8	2	7	Luft-Temperatur. Min.	8	2	7	Absolute Feuchtigkeit. 8	2	7	Relative Feuchtigk. 8	2	7	Richtung und Stärke des Windes. Meter/Sekund. 8	2	7	Bewölkung. 8	2	7	Niederschl.	Bemerkungen.
1	93.5	94.3	94.3	-14.4	-14.3	-13.4	-13.5	1.4	1.0	0.9	87	63	54	SE 5.6	NE 1.7	SW 5.0	6	9	10	6.6	✱⁰, ≡⁰ n.
2	96.8	99.8	02.4	-14.5	-14.0	-14.4	-14.0	1.4	1.4	1.3	90	93	86	NNW 6.3	NW 3.3	NW 2.9	5×	3	7	0.0	✱⁰ n, a, ≡⁰ p.
3	05.4	02.4	93.6	-14.6	-12.2	-11.5	-7.0	1.2	1.8	2.2	65	39	79	W 7.1	W 12.5	WSW 20.8	9	9	10	0.2	Ψ 8 a.
4	83.0	77.5	79.2	-12.7	-8.1	-6.8	-5.8	2.3	2.6	2.8	91	92	93	W 35.0	W 33.8	W 33.8	10×	10×	10×	7.0	✱ n, a, p.
5	90.2	94.3	95.2	-8.1	-7.3	-7.3	-8.4	2.4	2.5	2.3	92	94	93	NW 13.5	NW 8.3	W 8.3	10×	10×	10×	56.8	✱² n, ✱⁰ a, p.
6	82.4	82.2	86.6	-10.5	-10.4	-10.6	-8.9	1.9	1.8	2.2	90	89	93	S 25.0	S 10.0	WNW 6.3	10	10≡	0	18.2	✱⁰ n, ≡⁰ a.
7	95.0	93.8	90.2	-11.3	-7.0	-6.6	-5.6	2.3	2.2	2.7	83	79	91	W 10.0	W 12.5	SW 16.7	10	10	10×		✱⁰ p.
8	90.7	92.4	93.2	-7.2	0.5	1.3	0.6	**4.4**	**4.4**	**4.4**	92	88	91	W 16.7	WNW 16.9	W 17.9	7	10	10×	3.0	✱⁰ p.
9	94.2	94.7	93.9	0.1	0.3	0.4	**1.5**	4.1	4.2	**4.4**	88	88	85	W 10.0	W 10.0	W 12.5	10	9	9	0.0	
10	87.8	86.6	91.5	-6.2	-5.3	-9.9	-8.9	2.7	2.0	2.1	88	92	91	S 4.2	NW 7.1	N 6.3	8	10*≡	10*≡		✱⁰, △⁰, ≡ p.
11	97.1	98.2	98.8	-12.6	-12.3	-14.0	-15.5	1.6	1.3	1.2	87	86	89	E 17.9	ENE 12.5	ENE 10.0	10*≡	10*≡	10*≡	22.3	✱, ≡ n, a, ✱⁰, ≡ p.
12	99.1	99.8	99.8	-15.9	-15.4	-15.4	-14.1	1.2	1.3	1.2	86	93	80	ENE 6.3	NE 6.3	NE 4.2	10	10*≡	10	21.1	✱, ≡⁰ n, ✱⁰ p.
13	03.6	04.4	05.2	-15.8	-13.5	-14.3	-15.3	1.4	1.4	1.2	86	86	86	E 8.3	ENE 5.0	ENE 3.3	10	9≡	0	0.0	≡⁰ a, p. Ψ 7 p.
14	06.7	07.4	**07.5**	-15.9	-15.4	-14.8	-14.4	1.2	0.9	0.9	83	58	60	NE 3.1	NNW 2.1	NNW 1.4	0	0	0		Ψ⁰ 7 p.
15	06.3	04.4	01.4	-15.5	-11.6	-11.7	-11.1	1.2	1.3	1.1	62	69	55	WNW 5.6	SSW 8.3	SSW 14.7	0	5	0		Ψ⁰ 7 p.
16	90.3	88.3	89.6	-19.6	-19.0	-14.3	-17.6	**0.7**	1.0	1.1	66	67	89	SW 33.8	S 6.3	S 8.3	8	10	10×		✱⁰ p.
17	88.7	90.7	92.0	-22.1	-22.1	-21.5	-20.5	**0.7**	0.8	0.8	83	88	83	SSE 20.8	SE 12.5	SE 5.6	0	0	0	3.5	✱⁰ n.
18	93.1	90.3	89.2	**-22.5**	-16.4	-16.0	-16.1	0.9	1.2	1.2	71	86	86	N 7.1	N 5.6	N 4.2	0	0	0		Ψ⁰ 7 p.
19	83.2	81.1	79.1	-16.5	-15.2	-14.2	-13.8	1.3	1.4	1.4	90	87	87	N 8.3	NNW 6.3	NW 6.3	2	9	9		
20	82.0	87.4	90.2	-18.7	-18.7	-18.5	-17.6	1.0	1.0	0.9	89	88	80	S 8.3	S 8.3	S 8.3	2≡	3	0		≡⁰ n.
21	95.9	95.8	96.4	-19.1	-17.6	-16.3	-12.4	0.9	1.1	1.0	75	85	55	S 13.9	S 20.8	W 0.8	0	2	0		Ψ⁰ 7 p.
22	95.2	95.4	94.3	-18.4	-15.4	-15.1	-19.5	0.9	**0.7**	0.8	65	50	83	SW 17.9	SW 27.8	S 20.8	9	9	10		
23	86.4	86.8	88.3	-20.9	-17.5	-14.0	-9.9	1.0	1.3	1.7	84	84	78	S 26.3	SW 25.0	S 12.5	10≡	10	10		
24	87.9	87.5	86.3	-17.5	-9.7	-11.6	-10.4	1.9	1.7	1.9	86	88	87	SSW 12.5	S 10.0	S 10.0	10	9	8		
25	85.0	85.5	85.4	-13.0	-9.8	-8.8	-7.0	2.0	2.1	2.5	91	91	92	S 8.3	SE 1.6	ENE 7.1	8	10*≡	10≡		✱⁰, ≡⁰ p.
26	84.3	86.2	87.1	-9.8	-6.6	-8.1	-9.0	2.5	2.3	2.1	90	91	91	ENE 12.5	NE 8.3	NE 5.6	10*≡	10*≡	10*≡	0.0	✱⁰, ≡⁰ n, a, p.
27	89.6	89.8	89.8	-9.6	-9.6	-9.5	-10.7	2.0	2.0	1.8	90	90	89	NE 5.6	ENE 7.1	SE 4.2	10*≡	10≡	10≡	8.2	✱⁰, ≡ n, ≡⁰ a, p.
28	86.6	85.2	84.4	-14.9	-14.1	-14.8	-13.0	1.4	1.3	1.5	87	86	88	S 16.7	SSW 22.8	SW 22.8	3≡	9≡	9	5.0	≡⁰ n, a, Ψ 7 p.
29	81.9	79.1	77.9	-15.6	-9.8	-15.2	-14.1	1.9	1.3	1.4	86	86	87	W 8.3	SW 38.5	SW 20.8	3	5	8		Ψ 7 p.
30	74.2	71.2	68.3	-15.5	-14.2	-14.3	-15.2	1.4	1.4	1.3	94	91	86	SW 25.0	S 23.4	S 25.0	10≡	10×	10×		≡⁰ n,
31	**66.8**	67.9	69.9	-17.2	-15.6	-9.2	-12.6	1.3	1.4	1.0	93	59	59	SSE 8.6	S 2.8	NW 7.8	10*≡	9	8	3.1	✱⁰, ≡⁰ n, ✱⁰ a, Ψ, Ψ 7 p.
M.	90.4	90.3	90.4	-14.4	-12.2	-12.0	-11.6	1.7	1.7	1.7	84	82	82	12.0	10.7	10.0	6.8	7.7	7.0	155.0	

BEIHEFT
ZUM
JAHRBUCH DES NORWEGISCHEN METEOROLOGISCHEN INSTITUTS FÜR 1925

INSTRUMENTE UND APPARATE

FÜR

DIE LUFTELEKTRISCHEN UNTERSUCHUNGEN

AN DEM METEOROLOGISCHEN OBSERVATORIUM IN ÅS

VON

NILS RUSSELTVEDT

C/doc
AO

OSLO
DRUCK BEI GRÖNDAHL & SÖN — 1926

Einleitung.

Die unten beschriebenen Instrumente, Apparate und Anordnungen gehören alle dem Meteorologischen Observatorium in Ås. Sie sind sämtlich zum Gebrauche für die an dem Observatorium vorgenommenen, luftelektrischen Messungen angeschafft worden.

Die Beschreibung ist in drei Hauptabschnitte I, II und III eingeteilt.

Der Abschnitt I behandelt die Isolatortypen und die anderen Nebenanordnungen.

Der Abschnitt II behandelt Instrumente und Apparate für Einzelwertmessungen.

Der Abschnitt III behandelt Registrierinstrumente.

Die Instrumente und Apparate sind, wenn nichts anderes erwähnt ist, vom Verfasser erfunden und konstruiert worden. Die Instrumentenarbeit ist teils von Herrn Instrumentenmacher C. A. Ljungmann in Oslo, teils von den Mechanikern des Observatoriums, den Herren Oscar Braathe und Jens Aurud, ausgeführt worden.

I. Isolatortypen und Nebenanordnungen.

Beschreibung der zu elektrostatischem Zwecke konstruierten Isolatortypen.

Die zu elektrostatischen Zwecken konstruierten Isolatoren (siehe Fig. 1 und Fig. 2) sind aus gut isolierendem Ebonit gedrechselt und mit Rillen r versehen. Diese haben den Vorteil, dass der Oberflächenwiderstand vergrössert und dass die Oberflächenisolation bei Berührung mit den Händen nicht gestört wird. Die Rillen haben somit den Zweck, die Isolationsfähigkeit möglichst hoch zu gestalten und möglichst konstant zu halten. An der Stelle, wo der Befestigungsleiter A eine bedeutende Länge hat, berührt er, um die Rückstandsbildung zu verkleinern, den Isolator nur an zwei Stellen der Ausbohrung, und zwar an den eingeengten Partien b und b′ (Fig. 2). An den feinsten Isolatoren bestehen b und b′ aus Bernsteinröhrchen, die in der Ausbohrung eingesetzt sind. Wegen der Neigung zum Oxydieren des im Ebonit befindlichen Schwefels werden die Isolatoren mit Schellack überzogen. Siehe übrigens meine Abhandlung in der Physikalischen Zeitschrift, 9. Jahrgang, No. 25, und die Isolationsexperimente von Prof. Dr. Schering.

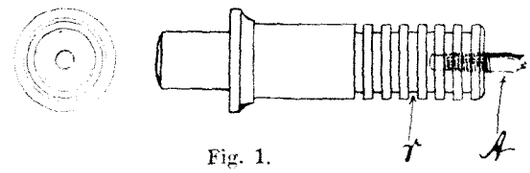

Fig. 1.

Die Isolatoren können in zwei Typen eingeteilt werden, nämlich in Stützisolatoren und Durchführungsisolatoren. Die Stützisolatoren dienen zur Befestigung von isolierten Teilen. Der normale Typus dieser Isolatoren ist in Fig. 1 veranschaulicht worden.

Die Durchführungsisolatoren dienen ausser zum Stützen auch zur Durchführung einer elektrostatischen Leitung durch eine Wand. (Normaltypus siehe Fig. 2).

Wenn unter den Abschnitten II und III nichts anderes erwähnt ist, so sind die Isolatoren wie oben genannt, gebaut.

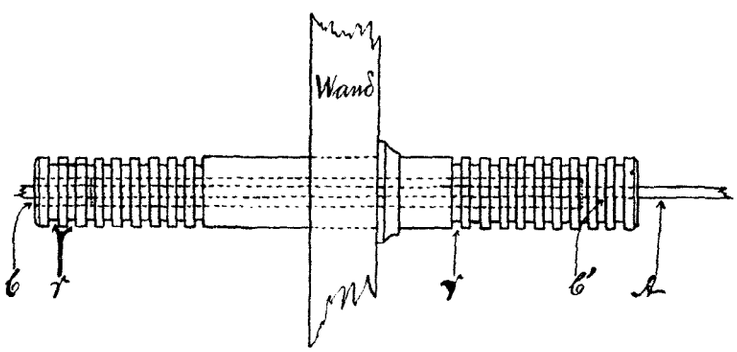

Fig. 2.

Beschreibung der Schutz- und Trocknungsanordnungen der elektrostatischen Isolatoren.

Wenn ein gewöhnlicher Isolator wechselnder relativer Feuchtigkeit ausgesetzt wird, so ändert sich wie bekannt der Oberflächenwiderstand desselben und zwar so, dass der Isolationsverlust mit steigender Feuchtigkeit immer grösser wird, bis er bei 100 % R. F. eine so bedeutende Grösse erreicht hat, dass der Isolator für elektrostatische Zwecke ganz unbrauchbar ist. Selbst Isolatoren, die eine fette Oberfläche haben, zeigen einen vergrösserten Isolationsverlust, wenn sich an der isolierenden Oberfläche Wassertropfen ausgeschieden haben. Die elektrostatischen Isolatoren müssen deshalb gegen Niederschlag und starke Feuchtigkeit geschutzt werden. Bei den nicht fetten Isolatoren ist es weiterhin notwendig die Feuchtigkeit möglichst niedrig und konstant zu halten. Isolatoren, die im Freien oder in feuchten Räumen verwendet werden sollen, werden deshalb mit besonders konstruierten, für künstliche Austrocknung eingerichteten Schutzkapseln versehen.

Die von mir konstruierten Schutz- und Trockenkapseln sind alle aus Metall. Sie haben, um so viel wie möglich Luft zu enthalten, verhältnismässig grosse Dimensionen. Die Luftzirkulation ist durch Sperrkapseln möglichst stark herabgesetzt. Um die Feuchtigkeitsvariationen in den Kapseln weiter herabzusetzen, wird das Innere derselben mit einer hygroskopischen Masse — Fliespapir oder lockerem Holz — bekleidet. Diese Anordnung trägt sehr dazu bei, die Feuchtigkeit konstant zu halten. In einzelnen Fällen, besonders wo es sich um fette Isolatoren handelt, wird durch dieses Verfahren jede künstliche Austrocknung überflüssig.

Um die Feuchtigkeitsprozente in den Trockenkapseln niedrig zu halten, muss man die Luft künstlich trocknen. Dies geschieht entweder durch Heizung oder durch Verwendung eines Trockenmittels. Die Erwärmung geht auf elektrischem Wege vor und zwar so, dass die Isolatoren entweder mittels speziell konstruierten (in der Physikalischen Zeitschrift, 9. Jahrgang, No. 25, näher beschriebenen) Heizapparate oder durch gewöhnliche Glühlampen geheizt werden. Mit Paraffin überzogene Isolatoren dürfen nicht über etwa 30° erwärmt werden. Das Paraffin ist nämlich nur ein guter Isolator, so lange es die ganze Festigkeit besitzt. Geschmolzenes oder beinahe geschmolzenes Paraffin ist für elektrostatische Zwecke ganz unbrauchbar.

Als Trockenmittel wird calciniertes Clorcalcium verwendet. Um zu vermeiden, dass zerstäubte Teile des Salzes an die Isolatoren gebracht werden können, werden gewöhnlich die Trockengefässe mit Baumwolle oder Gaze überdeckt.

Wenn unter den Abschnitten II und III nichts anderes erwähnti st, so sind die Schutz- und Trockenkapseln, wie oben beschrieben, gebaut.

Beschreibung des Prinzips und des Baues der elektrischen Erdleitungen.

Das Erdleitungssystem ist so eingerichtet, dass man mittels einer elektrischen Kontrollanordnung die Effektivität der Erdkontakte (Erdplatten) und jeder dem System angeschlossenen Erdverbindungen kontrollieren kann. Deshalb ist das System mit zwei Erdkontakten versehen, und die angeschlossenen Instrumente und Apparate haben zwei Erdkontaktschrauben. Der eine Erdkontakt besteht aus der Wasserleitung, der andere aus zwei in den Kellerboden eingerammten, etwa 1 Meter langen Eisenstäben E. Die Erdkontakte sind durch eine isoliert aufgelegte Leitung verbunden. Diese Leitung (die Erdleitung) führt nach allen Stellen, wo sich solche Anordnungen befinden, welche sorgfältig geerdet werden müssen. An jeder solchen Stelle ist, wie man aus der schematischen Fig. 3 sieht, die Leitung unterbrochen und die Enden mit den Erdkontaktschrauben K des betreffenden Instrumentes oder Apparates verbunden.

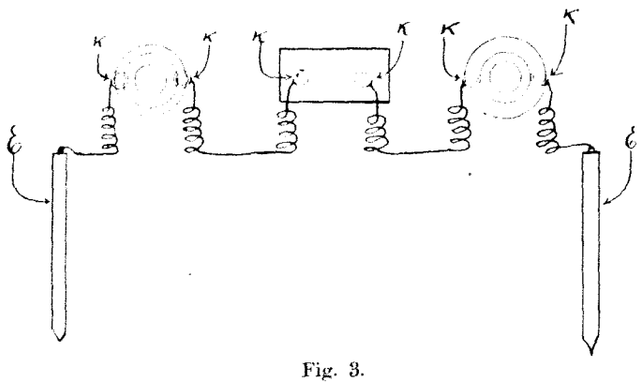

Fig. 3.

Die Erdkontakte E und die Erdleitung mit samt einem Teil der geerdeten Anordnungen bilden somit einen durch den Erdboden geschlossenen, elektrisch leitenden Kreis. Schliesst man in dieses Leitungssystem eine Stromquelle und einen Strommesser ein, so wird dieses Instrument einen Ausschlag geben. Die Grösse des Ausschlages wird der elektromotorischen Kraft der Stromquelle proportional, dem Widerstand des Leitungskreises jedoch entgegengesetzt proportional sein. Ist der Widerstand an irgend einer Stelle gross, so gibt der Strommesser einen ungewöhnlich kleinen Ausschlag; ist die Leitungsverbindung an irgend einer Stelle unterbrochen, so bekommt man gar keinen Ausschlag. Wird der Strommesser allein in das Leitungssystem eingeschaltet, so wird er gewöhnlich keinen Strom zeigen; kommen jedoch in dem System schädliche Spannungsunterschiede vor, so bekommt man einen Ausschlag. Derart entstandene Ströme sind gewöhnlich Störungen von Batterien oder stromführenden Leitungen zu verdanken, und die Entdeckung solcher Fehler ist deshalb eben so wichtig wie die Entdeckung der früher erwähnten Kontaktfehler.

Beschreibung der Kontrollanordnung des Erdleitungssystems.

Die Kontrollanordnung des Erdleitungssystems (siehe Fig. 4) besteht hauptsächlich aus dem Galvanometer A, der Batterie B und den drei Schalteranordnungen a—S—a′—b′—b, d—S′—d′, e—S″—e′. Die Figur zeigt die allgemeine Betriebsschaltung. Die Leitungsverbindung geht dann durch a—S—a′—d—S′ nach e und von e durch zwei Abzweigungen nach E′ und (durch S″—e) E″.

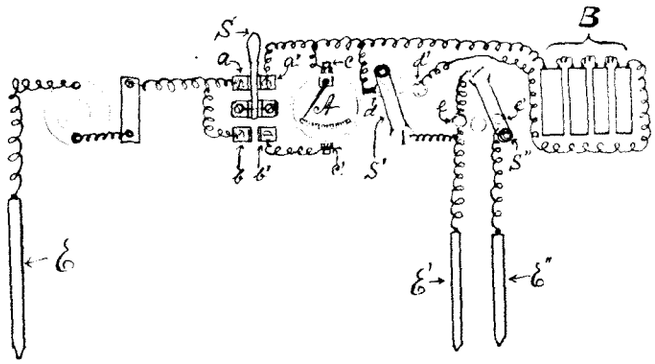

Fig 4.

Die Kontrolle geht nun in der Weise vor sich, dass man zuerst durch Einschalten des Galvanometers in den Leitungskreis sich davon überzeugt, dass das System stromfrei ist. Dies geschieht durch Drehen des Schalters S derart, dass der Kreis statt durch a—S—a′—d durch b—S—b′—c′—c—d geschlossen wird. Bleibt das Galvanometer während dieser Operation ruhig, so geht man zum zweiten Kontrollversuche — der Kontaktkontrolle — über. Zu diesem Zwecke dreht man den Schalter S′ von d nach d′, wodurch die Batterie B eingeschlossen wird. Der Stromkreis wird dann durch b—S—b′—c′—c—B—d′—S′—e geschlossen, und das Galvanometer wird, wenn keine vagabundierenden Ströme der oben erwähnten Art vorkommen, einen der Batteriespannung V proportionalen, dem Widerstande M des Leitungskreises entgegengesetzt proportionalen Ausschlag I zeigen. Es gilt dann die Gleichung:

$$I = \frac{V}{M}$$

Mittels der dritten Schalteranordnung kann man nun den Erdkontakt E″ ausser Tätigkeit setzen (S″ von e′ nach e) und auf diese Weise den Gesamtwiderstand des Systems vergrössern. Ist nun der Galvanometerausschlag I' und der Widerstand M', so erhält man:

$$I' = \frac{V}{M'}$$

Durch Division dieser Gleichung durch jene bekommt man:

$$\frac{I'}{I} = \frac{M'}{M}$$

Es ergibt sich also, dass bei ungeändertem Widerstandsverhältnisse $\frac{I'}{I}$ immer denselben Wert haben soll.

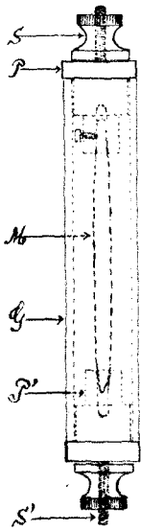

Fig. 5.

Beschreibung der verwendeten Schutzwiderstände.

Die Schutzwiderstände haben den Zweck, elektrostatische Anordnungen gegen zerstörende elektrische Ströme zu schutzen. Sie werden deshalb in die zwischen Spannungsbatterien und Messapparate führenden Leitungen eingeschaltet. Da die genannten Anordnungen in der Regel nur minimale Stromstärken ertragen können, so müssen die Schutzwiderstände eine sehr grosse Widerstandsfähigkeit besitzen. Der Widerstandskörper besteht deshalb gewöhnlich aus reinem Wasser, feuchtem Holz oder ähnlichen schlechtleitenden Stoffen. Die von mir verwendeten Schutzwiderstände sind alle nach dem unten (Fig. 5) angegebenen Vorbild angefertigt.

G ist eine Glasröhre, P und P′ sind zwei mit Klemmschrauben (S und S′) versehene Messingstopfen, die mittels Kompaund in die Röhre luftdicht eingesetzt sind. Der Widerstandskörper M ist aus Holz angefertigt. Um denselben hinreichend leitend zu machen, wird die Glasröhre zu ungefähr zwei Dritteln mit Wasser gefüllt.

II. Instrumente und Apparate für Einzelwertmessungen.

Beschreibung des Russeltvedt'schen Schwingungselektrometers.

Das Schwingungselektrometer[1]) ist ein Torsionsinstrument mit Spiegelvisierung. Das Potential wird durch Schwingungsmessungen bestimmt.

Die Hauptteile des Instrumentes sind eine Nadel und ein Bügel, welche die in Fig. 6 angegebene Form haben. Stellt man den Bügel isoliert auf und hängt man mittels eines feinen Metalldrahtes die Nadel so auf, dass sie wie in der Figur 6 inmitten des Bügels hängt, so wird die Schwingungsdauer der Nadel von dem elektrischen Zustande des Bügels und der Nadel beeinflusst werden. Leitet man die Nadel zur Erde ab und teilt dem Bügel eine elektrische Ladung mit, so schwingt die Nadel um so schneller, je grösser die Ladung ist. Nennt man das zu messende Potential V und die dazugehörige Schwingungsdauer T, so hat man, indem K und F die Instrumentenkonstanten sind:

$$(F + V^2)\ T^2 = K$$

oder genau:

$$(F + V^2)\ (1 + a\,t)\ T^2 = K$$

In dieser Gleichung bedeutet t die Temperatur und a den Temperaturkoeffizienten. a muss empirisch bestimmt werden.

Leitet man Nadel und Bügel zur Erde ab, so wird $V = 0$, und man erhält:

$$F\,T^2\ (1 + a\,t) = K$$

Bei einem zur Erde abgeleiteten System ist:

$$T = \sqrt{\frac{K}{F\,(1 + a\,t)}} = \text{Konstant für t} = \text{Konstant.}$$

Sind die Konstanten des Instrumentes bestimmt, so berechnet sich — unter Berücksichtignng der unten erwähnten Massregeln — die Spannung nach der Formel:

$$V = \sqrt{\frac{K - F\,T^2\ (1 + a\,t)}{T^2\ (1 + a\,t)}}$$

Bei geladenem Bügel hängt die Schwingungsdauer ausser von der Torsionskraft des Aufhängedrahtes, dem Trägheitsmomente der Nadel und der Stärke des elektrischen Feldes auch etwas von der Stellung der Nadel in dem Felde, der Grösse des Schwingungsbogens und der Kapazität des geladenen Systems ab.

Um genaue Potentialmessungen auszuführen, muss man deshalb beachten, dass die Nadel immer dieselbe Stellung im Bügel einnimmt, dass die zu messenden Schwingungen die einmal festgesetzte Grösse haben und dass die Kapazität hinreichend gross ist. Das Instrument muss folglich mit verschiedenen Hilfsanordnungen versehen werden, nämlich: Kontrollanordnung für die Zentrierung der Nadel, Kontrollanordnung für die Höheneinstellung der Nadel, Kontrollanordnung für die Einstellung des Bügels, Anordnung für die Einstellung des Schwingungsbogens.

Hinsichtlich der Grösse der verwendeten Kapazität ist folgendes zu bemerken. Wenn es sich um Potentialmessungen kleiner Elektrizitätsmengen handelt, so muss darauf geachtet werden, dass die schwingende Nadel Kapazitätsänderungen veranlasst. Diese Änderungen veranlassen unter diesen Umständen merkbare Variationen des Potentials und die angelegte Spannung kann dann falsch gemessen werden. Nehmen wir an, dass die maximale Kapazitätsänderung bei einer Gesamtkapazität von 10 cm. 1 cm. beträgt, so kann diese Variation den ziemlich grossen Massfehler von 5 % hervorrufen. Schaltet man jedoch so viel Kapazität in das System ein, dass die Gesamtkapazität 100 cm. erreicht, so sinkt der oben genannte Fehler bis 0.5 % hinab. Wünscht man noch grössere Genauigkeit, so schaltet man noch mehr Kapazität ein. Kann man die Kapazität aus irgend einem Grunde nicht hinreichend vergrössern,

[1]) Schwingungsmessungen im elektrischen Felde, siehe Phil. Mag. (6) 11, 402. 1906 — Owen.

so verfährt man folgendermassen. Der Nadel wird mittels des Schwingungserregers (siehe unten) die normale Schwingungsablenkung gegeben und dann in dieser Stellung festgehalten. Das System wird von einer Batterie geladen, die Nadel wird losgelassen und die Schwingungsdauer bestimmt. Die aus dieser Schwingungsdauer berechnete Spannung sei V', die Spannung der Batterie sei V°. Wird nun dem System mit abgelenkter Nadel irgend eine Ladung zugeführt und die Schwingungsdauer T wie oben bestimmt, so gilt, wenn die aus T berechnete Spannung V'' und die richtige Spannung V genannt wird, offenbar das Verhältniss:

$$\frac{V}{V''} = \frac{V^\circ}{V'}$$

und somit

$$V = V'' \frac{V^\circ}{V'}$$

Beschreibung des Instrumentes.

Der Bügel B (siehe Fig. 6) ist aus 1 mm. dickem Messingblech hergestellt. Der untere Teil b des Bügels ist der eigentliche Felderzeuger. Er hat die Dimensionen 8 × 1 × 1 cm. und steht durch die Zuleitungsstange S mit der Klemmschraube K in Verbindung. (Siehe auch Fig. 7). Der obere Teil b′ hat den Zweck, die genaue Einstellung des Bügels und der Nadel zu erleichtern. Er ist oben mit einer schlüssellochförmigen Ausfräsung r′ versehen und trägt an einer Seite einen Orientierungsstrich o. Wenn das Instrument richtig eingestellt und einnivelliert ist, so soll der Orientierungsstrich senkrecht stehen und der Nadelstiel n in die Mitte des kreisförmigen Teiles von r′ hinabhängen. Der Bügel ist im Inneren des Elektrometergehäuses (siehe Fig. 7) symmetrisch eingesetzt. Er wird mittels zweier Isolatoren in dem unteren Teile des Gehäuses festgehalten.

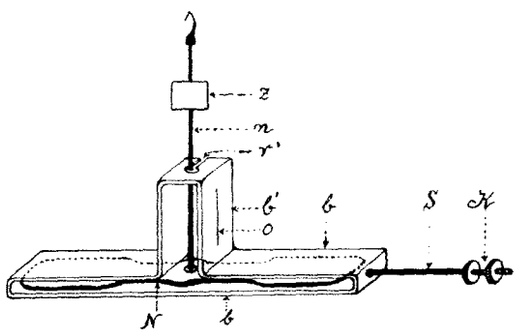

Fig. 6.

Die Nadel ist aus Messing hergestellt und hat die in Fig. 6 angegebene Form. Der Spiegel Z ist am Nadelstiel befestigt. Die Nadel oder korrekter ausgedrückt das Gehänge ist mittels des an dem Nadelstiele befestigten, doppelhakigen Aufhängehakens in gewöhnlicher Weise an einem 0.05 mm. dicken Messingdraht aufgehängt. Der Aufhängedraht ist oben an dem Aufhängestiel c (Fig. 7) festgeschraubt. c kann mittels der Schraubenmutter M auf und ab eingestellt werden. Der Torsionskreis C ist mit einer zehngradigen Teilung versehen. Die Suspensionsröhre r ist unten in dem Gehäuse G′ festgeschraubt. Das Elektrometergehäuse besteht aus zwei Teilen, einem unteren, kastenförmigen Teil G und einem oberen zylindrischen Teil G′. Die Verbindung zwischen dem oberen und dem unteren Teile ist so eingerichtet, dass G′ mitsamt den an ihm befestigten Anordnungen auf G herumgedreht werden kann. G ist unten an dem Fussringe R befestigt. R′ ist ein Gradbogen, welcher oben an G befestigt ist. An dem oberen Gehäuse befindet sich

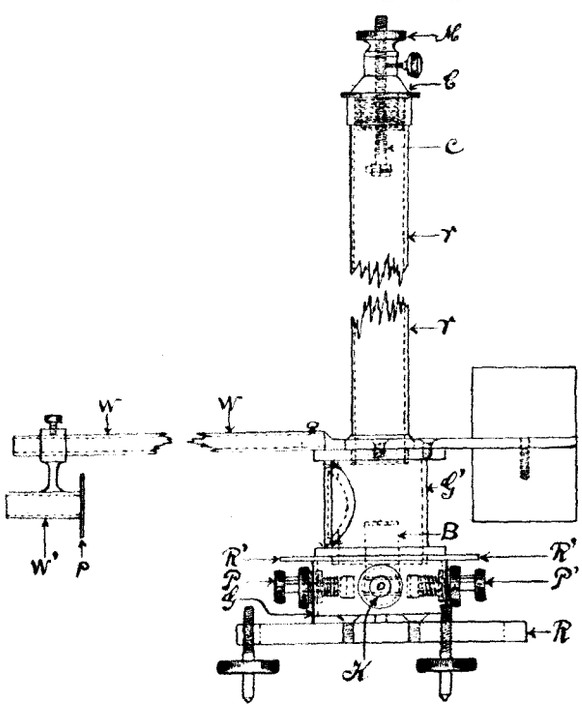

Fig. 7.

ein Limbus, der an den Gradbogen zeigt. Durch diese Anordnung kann somit die gegenseitige Stellung von G und G′ bestimmt werden.

P und P′ sind zwei mit Feder und Hemmung versehene Klemmen, mittels welcher die Nadel arretiert werden kann. Entfernt man die Klemmen, so kann man durch die so entstandenen Löcher die Höhe der Nadel kontrollieren. Zwei an dem Gehäuse aufgezogene Striche markieren die Höhenebene der Nadel.

Oben an dem Gehäuse G′ ist eine etwa 0.5 m. lange Stange W festgeschraubt. Diese Stange dient zur Befestigung der Visierröhre W′. Letztgenannte Röhre ist an dem einen Ende offen, an dem anderen Ende ist sie mit einer Blende p versehen. p ist, um ein gutes Spiegelbild zu geben, an der, dem Gehäuse zugekehrten Seite mattversilbert Diese Anordnung bildet mit dem Instrumentenspiegel zusammen die Ablesevorrichtung des Elektrometers.

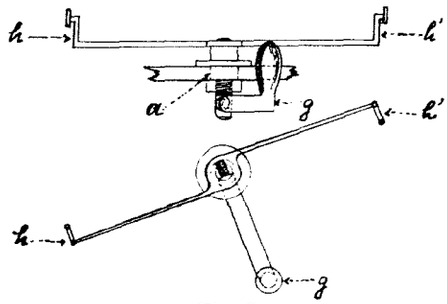

Fig. 8.

Der Schwingungserreger (Fig. 8) ist am Boden des unteren Gehäuses befestigt. Senkrecht unter dem Mittelpunkte des Bügels ist G durchgebohrt und durch dieses Loch führt die Achse a, sodass der Handgriff g sich ausserhalb des Gehäuses und die anderen Teile des Apparates im Inneren desselben befinden.

Wenn der Erreger nicht in Gebrauch ist, werden h und h′ mittels einer Feder an die Wände des Gehäuses angedrückt. Soll die Nadel zum Schwingen gebracht werden, so führt man den Handgriff zur Seite, bis er einen an dem Fussringe befestigten Knauf antrifft. Durch diese Drehung des Erregers wird die Nadel (mittels der Arme h und h′) um einen bestimmten Winkel gedreht. Lässt man nach einigem Abwarten g erneut los, so wird der Erreger mittels der Feder wieder in die Ausgangsstellung schnell zurückgetrieben, und die Nadel wird in Schwingungen von bestimmter Grösse kommen.

Da die Schwingungszeit eine genau bestimmbare Grösse ist und da die Nadel bei ungeladenem Bügel langsam schwingt (9.660 Sek.), so misst das Elektrometer, wenn richtig behandlet, sehr genau Potentialunterschiede von etwa 10 bis etwa 1000 Volt. Dieser Massbereich kann durch Verwendung einer anderen Nadel verändert werden.

Die Instrumentenkonstanten haben die folgenden Werte: $F = 8460$, $K = 789\,460$. Wenn das Instrument ungestört bleibt, halten sich die Konstanten jahraus ungeändert.

Das Elektrometer, welches im Jahre 1906 gebaut ist, ist für Verifizierung und zur Kontrolle der anderen Elektrometer gebaut; es ist aber auch in allen Fällen, wo es sich um stationäre Messungen handelt, sehr gut verwendbar. Es misst auch die Spannung von Wechselströmen.

Beschreibung des Russeltvedt'schen Multiplexelektrometers.

Das Multiplexelektrometer ist nach demselben Prinzip wie das Kohlrausche Sinuselektrometer[1]) konstruiert. Die Einrichtung ist hier jedoch eine andere, indem das Instrument statt einer Elektrometernadel und eines abstossenden Armes zwei kreuzweise gelegte Nadeln und zwei oder korrekter vier abstossende Arme hat. Weiter wird die Direktionskraft der Nadelanordnung nicht durch magnetische, sondern durch mechanische Kraft, nämlich die Schwere, bewirkt. Schliesslich muss hervorgehoben werden, dass das Instrument mit einem Kondensator versehen ist, sodass auch ziemlich kleine Potentiale gemessen werden können.

Die Nadelanordnung besteht aus zwei kreuzweise gelegten, aus sehr dünnem Aluminiumblech hergestellten Nadeln a a′, b b′ (Fig. 9). a a′ ist 10 cm. lang, b b′ 10.5 cm. lang, das Ende b′ ist 0.5 cm. länger als die anderen Nadelflügel. Mittels des dadurch erhaltenen Gewichtausschlages wird die Direktionskraft bewirkt.

Die äusseren und inneren Enden der Flügel sind 1.5 beziehungsweise 1.0 cm. breit. s, s′, s″, s‴ sind an den Flügeln aufgebogene Stützwinkel. Die Nadeln sind an einer Achse A be-

[1]) Siehe R. Kohlrausch 1853, auch die späteren Lehrbücher von demselben Verfasser.

festigt. Die Zapfen der Achse ruhen in sehr feinen Lagern, von welchen das eine in der Fundamentplatte F, das andere in dem Kloben K eingesetzt ist. An der Achse sitzt eine sehr feine Spiralfeder, deren äusseres Ende an dem Kloben befestigt ist. Diese Feder ist nicht gespannt und wirkt somit nicht drehend auf die Achse. Ihr Zweck ist eine gut leitende Verbindung zwischen A und F herzustellen.

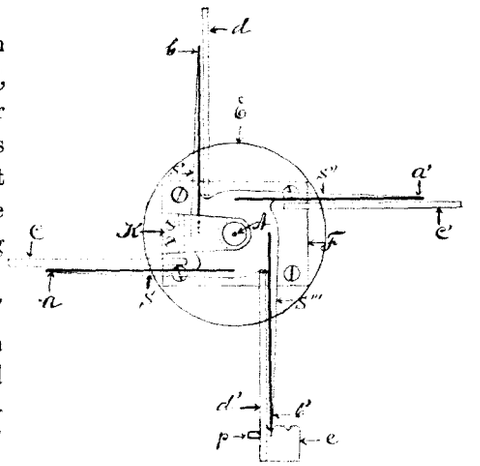

Fig. 9.

Die abstossenden Arme oder Platten c, c', d, d' sind an F befestigt. Sie sind aus einer 1.0 mm. dicken Messingplatte hergestellt und sind etwas länger und breiter als die Nadelflügel. d' ist mit einer Ablesungsvorrichtung e versehen. Dieselbe besteht aus einer an d' festgeschraubten, gebogenen Platte, die mit zwei Paar Visierstrichen versehen ist. Mittels dieser Vorrichtung kann die gegenseitige Stellung von d' und b' genau einvisiert werden.

Der an d' befestigte Stift p dient als Zeiger bei der Einstellung des Kondensators.

Die Fundamentplatte F ist mittels 4 Schrauben an einer gut isolierenden, mit Rillen ver-

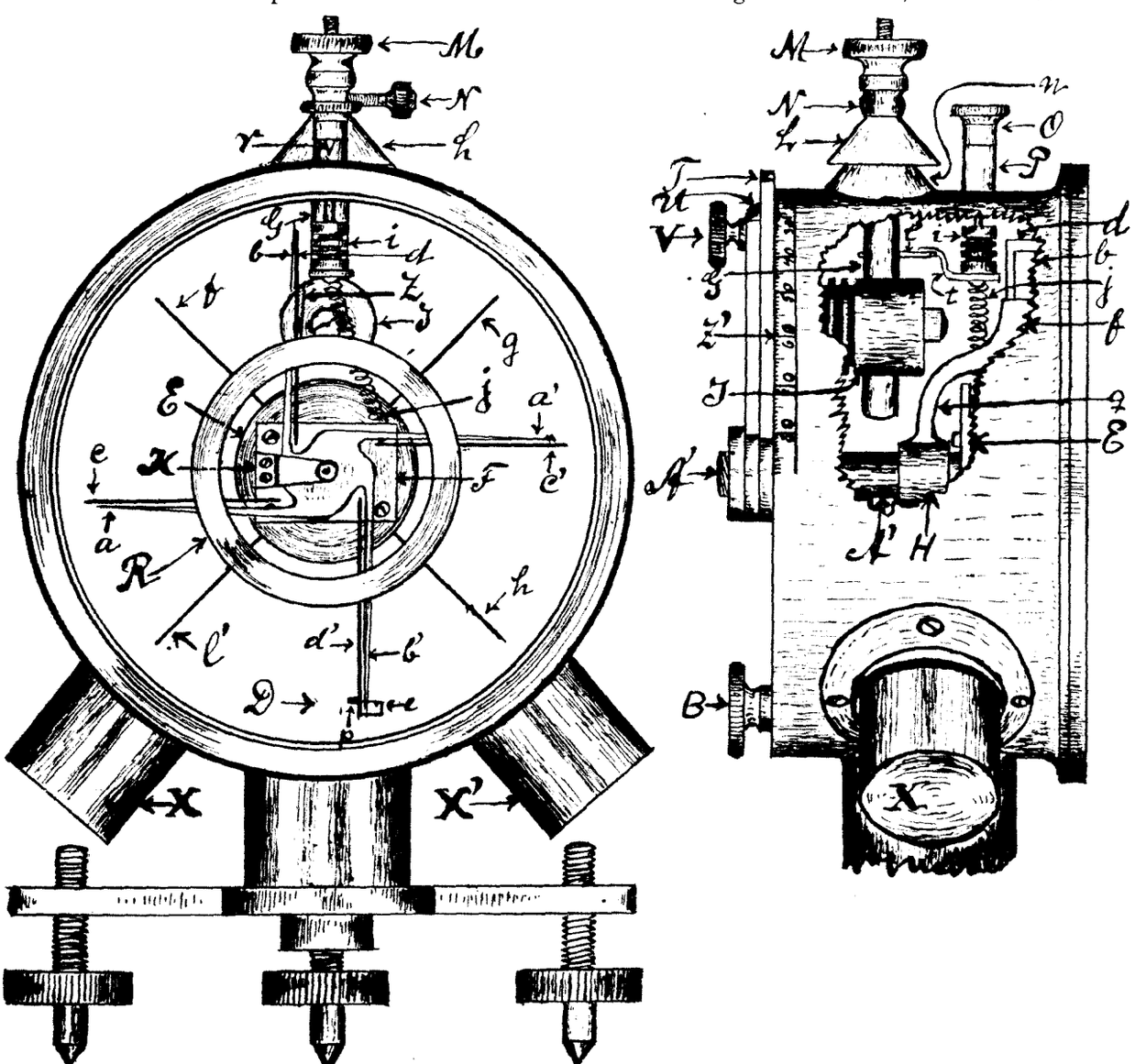

Fig. 10. Vorder- und Seitenansicht des Multiplexelektrometers.

sehenen Ebonitplatte E befestigt. Der Abstand zwischen den Platten (F und E) beträgt etwa 1 cm. In der Mitte der Platte E ist senkrecht eine solide Messingachse A′ (Fig. 10) festgeschraubt. Diese Achse geht durch ein in der Bückwand des Elektrometergehäuses konzentrisch eingesetztes Lager und ist an der Rückseite des Instrumentes mit einem soliden Arme T U verbunden. Mittels dieses Armes kann dann die Messanordnung eingestellt werden. Am oberen Rande des Armes ist ein Zeigerstrich eingeritzt. Mittels dieses Striches kann man die Stellung des Armes zu dem an dem Gehäuserande eingeritzten Gradbogen Z′ ablesen.

Die Elektrizität wird durch den Zuleitungsstiel G, die Kontaktanordnung t des Unterbrechers und die Kontaktfeder j der Messanordnung zugeführt. Der Stiel G, welcher mittels des Isolators I isoliert wird, trägt am oberen Ende eine Klemmschraube M und einen konischen, verschiebbaren Deckel L. Wenn das Instrument nicht in Gebrauch ist, ruht L an dem am Elektrometergehäuse befestigten Konus n, und das Instrument ist dann dicht verschlossen. Wenn das Elektrometer gebraucht werden soll, schiebt man den Deckel bis zum Ansatze hinauf und schraubt die Schraube N an.

Der Unterbrecher besteht aus der an dem Elektrometergehäuse befestigten Röhre P, dem Stiel y[1]), dem Kopfe O, dem Isolator i und der Kontaktanordnung t. O, y, i und t sind miteinander fest verbunden. Am oberen, vorderen Rande der Röhre P sieht man einen v-förmigen Einschnitt. In diesen Einschnitt passt ein an dem unteren Rande von O befestigter Messer. Wenn der Messer in dem Einschnitte ruht, so berührt das äussere Ende von t den mit G verbundenen Stiel l, und G steht mit der Messanordnung in Verbindung. Hebt man mittels des Kopfes O den Messer aus dem Einschnitte auf und dreht ihn etwas zur Seite, so ist die Verbindung zwischen l und t aufgehoben.

Der Kondensator besteht aus vier, relativ grossen Platten f, g, h, l′ (Fig. 10), die an der Vorderseite des Ringes R festgeschraubt sind. Die Platten setzen sich nach hinten in Arme (siehe q Fig. 10) fort. Diese Arme sind mit der hinter E befindlichen Hülse H fest verbunden. H ist um die Achse A′ drehbar. Die Reibung zwischen A′ und H ist mittels einer Friktionsfeder ziemlich gross gemacht, sodass der Kondensator mitfolgen muss, wenn die Achse gedreht wird.

Der Kondensator kann mittels des Krummzapfes D im Verhältnis zu der abstossenden Platten gedreht werden. Die Achse des Krummzapfes geht durch die Hinterwand des Instrumentgehäuses und endet im dem Kopfe B. Der Ring R trägt an der oberen Seite einen Zeiger Z, welcher d gegenüber gestellt, die Aussenstellung des Kondensators markiert. Die Kondensatorplatte l′ ist mit einem Loche versehen, dessen Durchmesser 4 mm. grösser ist als der des Stiftes p. Das Loch ist so angebracht, dass der Stift, wenn der Kondensator in der Innerstellung sich befindet, in der Mitte des Loches steht. Wenn das Ende von p in der Ebene des linken Planes von l′ sich befindet, so ist der Kondensator in der Innerstellung eingestellt.

Wenn das Instrument verwendet werden soll, so verfährt man folgendermassen: Der Deckel L wird losgelassen, bis zum Ansatze hinaufgeschoben und in dieser Stellung wieder mittels der Schraube N festgeschraubt. Der an F befindliche Zeigerstreich wird am Nullstrich der Skala Z′ eingestellt, und das Instrument wird mittels der Fusschrauben so einnivelliert, dass b′ mit dem inneren (eventuel äusseren) Visier übereinstimmt. Der Zuleitungsdraht wird unter die Schraubmutter M befestigt, und die Spannung wird aufgesetzt. Will man ohne Kondensator beobachten, so dreht man F (mittels V), bis b′ mit dem inneren (eventuell äusseren) Visier übereinstimmt. Der an der Skala Z′ abgelesene Wert gibt dann korrigiert die vorhandene Spannung an. Beobachtet man mit Kondensator, so muss derselbe in der Innerstellung scharf eingestellt werden. Wenn dieses getan ist, hebt man mittels des Kopfes O den Messer r aus seiner Ruhelage und dreht ihn etwas zur Seite; dadurch hebt man, wie früher erwähnt, die Verbindung zwischen t und l auf, wodurch somit die eigentliche Messanordnung (im elektrischen Sinne) von dem Elektrometerstiel G abgetrennt wird. Der Kondensator wird nun in Aussenstellung gedreht, und das Instrument wird, wie oben (ohne Kondensator) beschrieben, eingestellt und abgelesen.

Die Skala Z′ ist in Bogengrade eingeteilt. Nennt man die Spannung V und den Ausschlagswinkel α, so hat man:

[1]) y, in der Figur ausgelassen, bezeichnet den Stiel, welcher die Verbindung zwischen i und O bildet.

Ohne Kondensator, inneres Visier

$$V = 1960 \sqrt{\sin \alpha}$$

Mit Kondensator, inneres Visier

$$V = 940 \sqrt{\sin \alpha}$$

Das im Jahre 1919 gebaute Instrument ist mehrere Jahre zur Bestimmung des luftelektrischen Potentialgefälles benutzt worden.

Beschreibung des Russeltvedt'schen Aufladers.

Der Auflader dient zum Aufladen elektrostatischer Instrumente, zum Beispiel des Aspirationselektrometers. Wie bekannt, bietet es manchmal ziemlich grosse Schwierigkeiten, derartige Apparate mittels der gewöhnlich verwendeten Hilfsmittel (Zambonisäulen, geriebenen Stäben aus irgend einem isolierenden Materiale) eine passende Ladung mitzuteilen. Mittels des Aufladers geht eine solche Operation sehr leicht, indem die Spannung des Apparates innerhalb ziemlich weiten Grenzen variierbar ist.

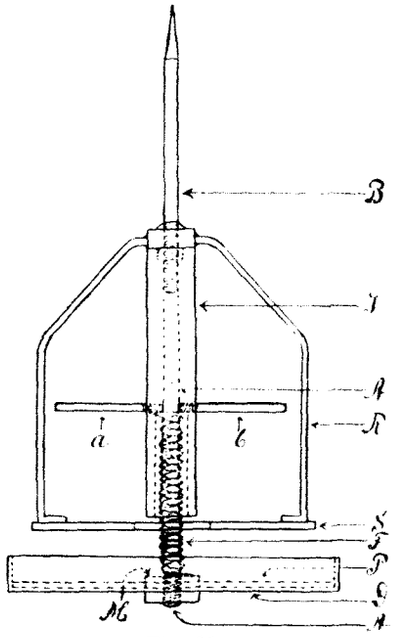

Fig. 11.

Der Auflader (Fig. 11) ist ein leicht variierbarer, elektrischer Kondensator. Die Metallschale D ist am Boden mit einer dünnen, etwa 1 mm. dicken Paraffinschicht P versehen. In der Mitte der Schale ist eine Achse A festgeschraubt. Der Metallrahmen R ist an einer kreisförmigen Metallplatte S (Durchmesser 7 cm.) festgelötet. Der Ladestift B geht durch den oberen Teil des Rahmens und ist in dem oberen Ende des zylindrischen Isolators I festgeschraubt, wodurch S, R, B und I fest verbunden werden, und die nötige Leitungsverbindung zwischen S und B hergestellt wird. Der Isolator ist, wie man sieht, in achsialer Richtung durchbohrt. Die Ausbohrung ist im oberen Ende so gross, dass A frei bewegt werden kann. Unten, von den Armen a, b an, ist sie so weit, dass die Spiralfeder F frei laufen kann. F ist unten an der Schraubmutter M, oben an dem oberen Ende der weiten Ausbohrung befestigt. Die Spiralfeder hält den Schild, S, in einer bestimmten Entfernung von der Schale.

Wenn der Auflader benützt werden soll, so verfährt man folgendermassen: Man fasst mit dem Daumen an der unteren Seite der Schale, mit dem Zeige- und Mittelfinger an den Armen a, b und drückt den Schild gegen die Paraffinbelegung. Darauf teilt man (mittels des Ladestiftes) dem Apparate von einer Elektrizitätsquelle (Element oder Batterie) eine passende Ladung mit. Setzt man nun B mit einer elektrostatischen Messanordnung in Verbindung, so kann man die Spannung mittels des beweglichen Schildes so regulieren, dass das Elektrometer einen passenden Ausschlag gibt.

III. Registrierinstrumente für luftelektrisches Potentialgefälle und Leitfähigkeit der Luft.

Ein neuer mechanischer Kollektor.

Das Prinzip des Kollektors (siehe auch meine Abhandlung in der Physikalischen Zeitschrift, 9. Jahrgang No. 13) kann in folgender Weise erklärt werden. Ein leitender Körper, welcher in abgeleitetem Zustande in ein elektrisches Feld eingeführt wird, zeigt sich, wenn er isoliert in neutrales Feld zurückgeführt wird, elektrisch geladen. Die so influierte Ladung gibt ein Mass für die Intensität des Feldes. Führt man den genannten Körper (unten als Influenzator bezeichnet) wiederholt und in derselben Weise zwischen dem elektrischen Felde und einer in dem neutralen Felde aufgestellten Messanordnung hin und her, so wird sein Potential sich nach und

nach ändern, bis es die Grösse des Potentials des Influenzators erreicht hat. Setzt man nun die Bewegung fort, so bleibt, solange die Feldintensität ungeändert gehalten wird, das Potential auch ungeändert. Variiert man dagegen das Feld, so ändert sich auch die Spannung, und zwar in demselben Verhältniss. Das Vorzeichen der Ladung ist dem des Feldes entgegengesetzt.

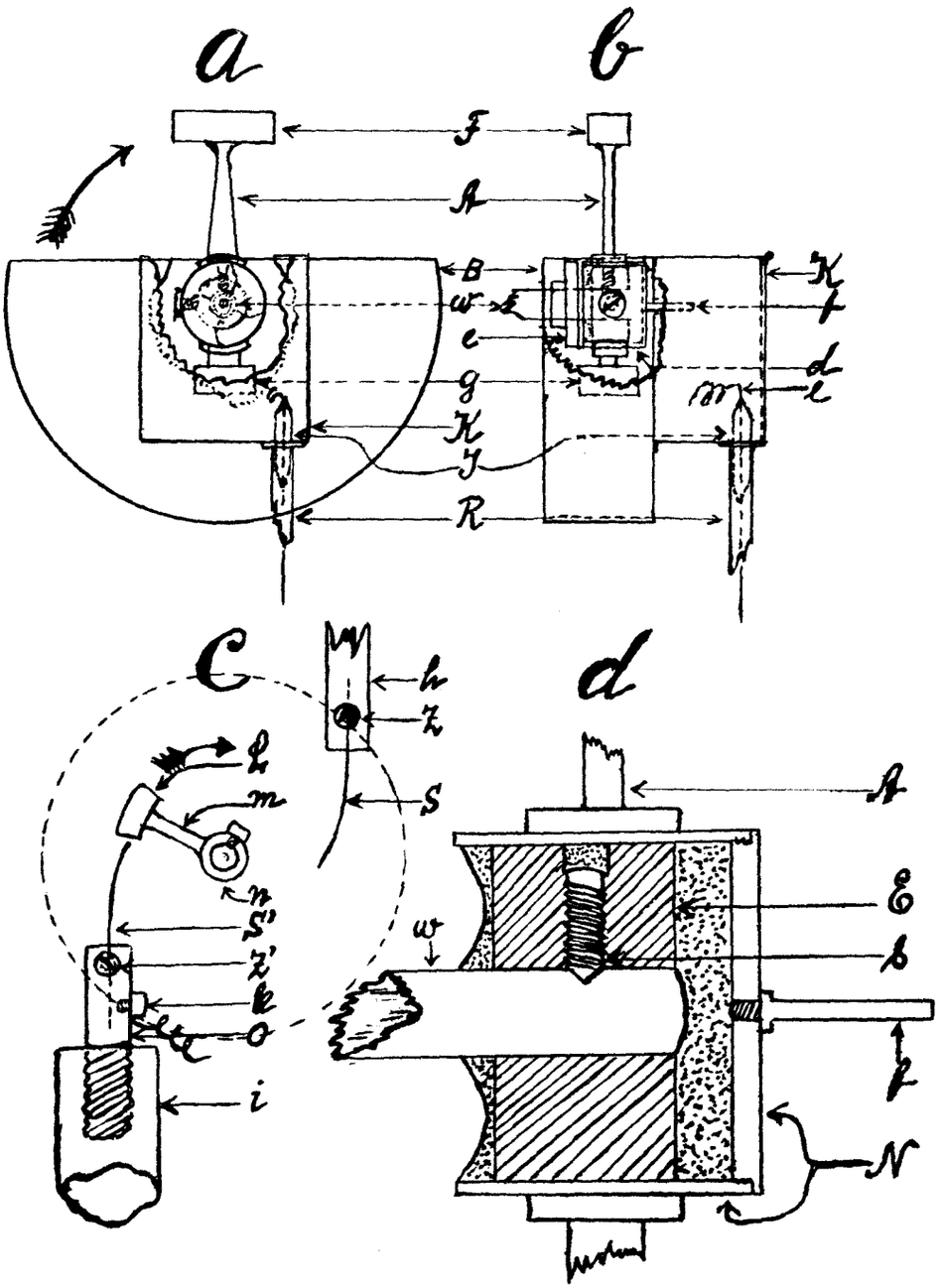

Fig. 12.

a und b zeigt den Kollektor in ungefähr einem Zehntel der natürlichen Grösse, c und d sind in ungefähr natürlicher Grösse gezeichnet. c ist der Deutlichkeit halber nicht bei a und b mit dargestellt.

Richtet man es unterdessen so ein, dass man die abgestossene, anstatt die influierte Elektrizität empfängt, so bekommt die Ladung der Messanordnung dasselbe Vorzeichen wie das des Feldes. Bewegt man den Influenzator in dem elektrischen Felde der Luft, so gibt selbstverständlich das System ein Mass für das luftelektrische Potentialgefälle.

Nach dem oben beschriebenen Prinzip ist der mechanische Kollektor konstruiert.

Der Influenzator wird von einem elektrischen Wechselstrommotor bewegt. Die Bewegung ist kreisförmig.

Der Influenzator F (Fig. 12) mitsamt den übrigen beweglichen Teilen des Kollektors ist an der Motorachse w befestigt. Wenn der Motor in Tätigkeit ist, so rotiert F in der von dem Pfeile angegebenen Richtung und schwingt somit in die halbkreisförmige, geerdete Kapsel B hinein und hinaus. Wenn er die in der Figur angegebene Lage einnimmt, hat die Influenswirkung ihr Maximum. Wenn er eine halbe Umdrehung gemacht hat, so befindet er sich unten in B und ist somit der Wirkung des Erdfeldes entzogen — er ist dann im neutralen Felde.

Die durch die elektrische Verteilung entstandene Elektrizität wird mittels einer Sammelanordnung aufgenommen. Dieselbe (in Fig. 12, c veranschaulicht) wirkt wie die Kollektoranordnung eines Gleichstromdynamos. Hier ist jedoch nur eine Lamelle L nötig. Die Bürsten sind mit S und S′ bezeichnet. L ist an einem mit Wellenhülse n versehenen Arme m befestigt. n ist an der Achse f (Fig. 12, a, b, d) festgeschraubt und zwar so, dass L die in a angegebene Stellung einnimmt, wenn F der grössten Influenzwirkung ausgesetzt ist, also wie in a. Wenn der Influenzator in das elektrische Feld schwingt, berührt somit L die Feder S′, wenn er in die Kapsel schwingt, so berührt er die Feder S. Die Bürstenfedern sind in die Bürstenhalter h und o eingesetzt und mittels der Schrauben Z und Z′ sicher befestigt. h und o bilden somit die Pole des Kollektors.

Wenn das Potentialgefälle positiv ist, so bildet S′ den positiven, S den negativen Pol.

h ist an der Kapsel K (a, b) direkt befestigt und somit geerdet. o ist mittels des Isolators i isoliert. Die nach dem Elektrometer führende Leitung l (b) ist an der Klemmschraube k (c) befestigt.

Die Konstruktionszeichnung, Fig. 12, a, b, zeigt den Kollektor von der vorderen und der linken Seite. Die Kapsel B ist aus 1 mm. dickem, durchlöchertem Zinkblech (käuflich) hergestellt. Ihre Form geht aus der Zeichnung hervor. Sie ist mittels solider Bügel an den Motor befestigt. Die Kapsel K ist an der vorderen Seite der Kapsel B angebracht und dient zum Schutz der Sammelanordnung. Sie ist aus 1 mm. dicken Messingblech hergestellt. An der vorderen Seite derselben befindet sich eine mit Sammt gedichtete Schiebetür. Die Kapsel hat zwei Durchborungen, eine für den Isolator I und eine in die, die Achse f frei hineinragt. Das Innere der Kapsel ist mit Löschpapier bekleidet. Am Boden derselben befindet sich ein relativ grosses Trockengefäss.

In der Zeichnung sind die beiden oben genannten Kapseln durchbrochen, so dass man in den inneren, beweglichen Mechanismus hineinblickt.

Der Influenzator F ist aus 0.3 mm. dickem, hartem Messingblech zusammengelötet und an dem Arme A solid befestigt. A ist an der Nabe d festgeschraubt. Das Gewicht g dient zur Ausbalanzierung des rotierenden Systems. Die Röhre R dient zum Schutze der Elektrometerleitung, und ist deshalb ganz in den Registrierraum hineingeführt. Um die Isolatoren der Elektrometerleitung trocken zu halten, ist die Röhre an mehreren, verschiedenen Stellen mit Trockenkapseln versehen.

e ist eine mit 4 Flügeln versehene Zentrifuge, die an der Motorachse befestigt ist. Ihr Zweck ist teils die Ventilation (siehe unten) zu beschleunigen, teils Schnee, Staub, Insekten etc. von der Nabenisolation wegzuschleudern.

Die Nabe d besteht aus einem leitendem und einem isolierenden Teil. Die Hilfsfigur *d* — in ungefähr natürlicher Grösse gezeichnet — stellt einen in achsialer Richtung gezogenen Schnitt derselben dar. w ist die Motorachse, N die Nabenkapsel, E (mit ganzen Linien gestrichelt) ein aus Ebonit gedrechselter Stöpsel, die punktierten Teile bestehen aus Paraffinguss. Die Nabenkapsel ist ein aus Messing verarbeitetes, zylindrisches Gefäss mit eingeschraubtem Boden. Sie ist mittels einer soliden Schraube an E befestigt. Die tief versenkte, kopflose Schraube s hält E an der Triebachse fest.

Der Motor G (Fig. 13) ist ein für Ventilationszwecke konstruierter, 100-wattiger Wechselstrommotor, welcher bei normaler Belastung und voller Spannung ca. 2000 Umdrehungen in der Minute macht. Bei gewöhnlichem Betrieb wird aus verschiedenen technischen Gründen die Leistung (durch Einschalten eines Widerstandes T) so herabgesetzt, dass die Zahl der Umdrehungen ungefähr 1000 beträgt.

Das vordere Ende der Motorachse trägt, wie schon früher erwähnt, die Influenzatoranordnung und die Zentrifuge. Das hintere Ende derselben ist mit einem Ventilator P versehen.

Der Motor mitsamt dem Ventilator ist von einer zylindrischen, flachbodigen Kapsel D umgeben. Dieselbe ist, um leicht entfernt werden zu können, die Länge nach in zwei Halbteile geteilt. Beide Teile sind an dem Motor festgeschraubt. Am Boden sind beide mit einem ca. 4 cm.² grossen runden, konzentrischen Loch versehen.

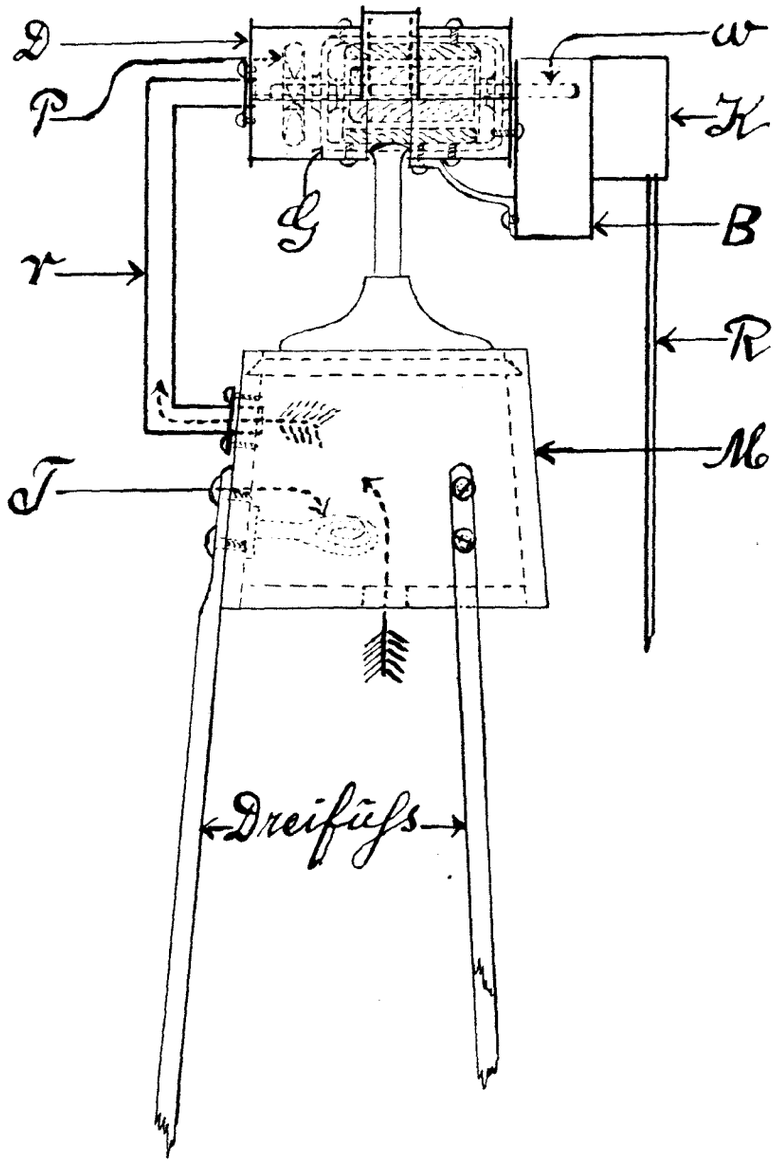

Fig. 13.

Die Röhre r ist an dem hinteren Ende von D festgeschraubt und mündet in dem Behälter M aus. M ist ein hölzernes Gefäss mit einer 12 cm.² grossen Öffnung im Boden. Es enthält den oben genannten Motorwiderstand, und dient als Heizzimmer für die Ventilationsluft.

Wie oben angedeutet, wird das System künstlich ventiliert. Diese Ventilation hat nicht nur die Abkühlung des Motors zu besorgen, sondern auch die sehr wichtige Funktion die freie Oberfläche der Nabenisolation trocken zu halten. Die Ventilationsluft (siehe die Pfeile, Fig. 13) wird mittels des Ventilators und der Zentrifuge in Zirkulation gesetzt. Sie wird zuerst vom Freien in M eingesaugt. Hier wird sie von dem Motorwiderstande ein wenig erhitzt und grösstenteils von eventuell mitgeführten Wassertropfen befreit. Von M wird sie durch die

Röhre r in die Motorkapsel D transportiert. Dort kühlt sie den Motor, wird dann ervärmt und so durch das vordere Kapselloch gegen die hintere freie Seite der Nabenisolation getrieben.

Die Isolation dieses Masssystems hält sich durch die oben genannten Anordnungen gut und konstant, indem die störenden Faktoren, nämlich feuchte Luft und Insekten, künstlich weggehalten werden.

Die Effektivität des Kollektors ist relativ sehr gross. Der Influenzator macht ungefähr 1000 Umdrehungen in der Minute oder 17 in der Sekunde. Rechnet man nun, dass die effektive Kapazität 5 cm. ist, so beträgt also die pro Volt Spannungsdifferenz und pro Sekunde entwickelte Elektrizitätsmenge $17 \times 5 \times 1/300 = 0.28$ C. G. S. Die Reduktionskonstante des Kollektors beträgt bei günstigster Einstellung 7.5. Ist nun das Potentialgefälle beispielweise 100 V/m, so wird somit das Registriersystem bis auf eine Spannung von $100/7.5 = 13.3$ Volt geladen. Unter diesen Umständen wird bei ungeladenem System eine Elektrizitätsmenge von $13.3 \times 0.28 = 3.8$ C. G. S. entwickelt, oder in Stromstärke umgerechnet 1.3×10^{-9} Ampére. Ein Masssystem von mässiger Kapazität wird also von einem derartigen Kollektor so zu sagen augenblicklich auf volle Spannung aufgeladen.

Die Bürsten des Kollektors müssen ungefähr alle 6 Wochen erneut werden. Während des Einbaues muss man, um die Reduktionskonstante ungeändert zu behalten, beachten, dass die Bürsten in die richtige Höhe eingestellt werden.

Der Nullpunkt der Messanordnung wird derart fixiert, dass man den Influenzator der Wirkung des Erdfeldes ganz entzieht. Das geschieht in der Weise, dass man über die Kapsel B eine B ähnliche Kapsel wölbt. I rotiert dann in einem geerdeten Hohlraum und ist somit der Wirkung des Erdfeldes entzogen. Die Registrierung gibt dann selbstverständlich das Potentialgefälle 0 an. Der so erhaltene, richtige Nullpunkt stimmt nicht mit dem durch einfache Erdung des Systems erhaltenen Nullpunkt ganz überein, denn der letztgenannte ist durch Kontaktpotentiale gefälscht.

Die ersten Versuche einen solchen mechanischen Kollektor herzustellen wurden schon im Jahre 1909 gemacht. Der damals gebaute Kollektor hatte vertikale Triebachse und war mit mehreren Influenzatoren versehen. Diese Konstruktion erwies sich jedoch als ziemlich mangelhaft, und sie hatte nur Bedeutung als Grundlage für die weiteren Versuche. Die abschliessenden Experimente wurden erst im Sommer 1918 beendigt, und der Kollektor wurde im Herbste 1918 in regelmässigen Betrieb gesetzt.

Instrumentenanordnung für Bestimmung der Leitfähigkeit der Luft.

Bevor ich zur Beschreibung der Registrierapparate übergehe, muss ich die verwendete Massmethode etwas näher besprechen. Die Registrierung ist kontinuierlich und unterscheidet sich somit von den andern gewöhnlich verwendeten Methoden. Um Kontinuität in der Registrierung zu erreichen, ist es erforderlich die zum Aufladen der Elektrode notwendige Elektrizität so zuzuführen, dass das Elektrometer dadurch nicht beunruhigt wird. Dies geschieht in der Weise, dass dem ganzen elektrostatischen Systeme (Elektrode, Elektrometer und Leitungen) eine passende Elektrizitätsmenge in der Sekunde zugeführt wird. Man sieht leicht ein, dass bei bestimmten Widerstandsverhältnissen M der isolerenden Medien das Potential V' des Systems bis zu einem bestimmten Wert steigen wird. Wenn V' erreicht ist, geht ebensoviel Elektrizität von dem geladenen System verloren wie ihm zugeführt wird und es gilt somit die Gleichung

$$e = \frac{V'}{M}$$

Ändert sich M, so ändert sich auch V', und zwar in demselben Verhältnis. Mit konstantem e misst also das Elektrometer den Widerstand des Systems. Ist der Widerstand der Isolatoren m und der Widerstand der Luft m', so kann der Strom e in zwei Ströme zerlegt werden, e' und e'', und zwar ist

$$e = e' + e'' = \frac{V'}{m} + \frac{V'}{m'}$$

Ist nun m' gross gegenüber m, so kann das zweite Glied vernachlässigt werden und man erhält:

$$e = \frac{V'}{m}$$

Da $m = \frac{1}{\lambda O}$, wo O die aktive Oberfläche der Elektrode (d. h. der Teil des Systems, der bei der vorhandenen Spannung V' freien Strom gibt) bezeichnet und λ das spezifische Leitvermögen der Luft ist, so erhält man

$$e = O \lambda V'$$

Daraus folgt

$$\text{(I)} \qquad \lambda = \frac{1}{V'} \cdot \frac{e}{O}$$

Das heisst also, die spezifische Leitfähigkeit der Luft ist dem reziproken Werte des gemessenen Potentials proportional und, da e und O Konstanten sind, durch V' bestimmt.

Ist C die Kapazität von O, so kann man unter den oben genannten Voraussetzungen $O = 4 \pi C$ setzen; man erhält dann

$$\text{(II)} \qquad e = 4 \pi \lambda C V'$$

Für die aktive Oberfläche gilt ja das Coulombsche Zerstreuungsgesetz und somit auch die Gleichung

$$\frac{\delta Q}{\delta t} = 4 \pi \lambda Q$$

Wird $Q = C V'$ gesetzt, so ist

$$\frac{\delta Q}{\delta t} = e = 4 \pi \lambda C V'$$

Dividiert man mit $4 \pi C$, so erhält man

$$\lambda V' = \frac{e}{4 \pi C}$$

Daraus sieht man, dass Max. λ entspricht Min. V' und umgekehrt. Der maximale Wert von V' wird erreicht, wenn das Coulombsche Zerstreuungsgesetz nicht mehr gilt.

Beispiel:

Als Min. λ kann man bei uns den Wert 0.1×10^{-4} setzen. Bei dieser Registrieranordnung darf V' den Wert von 120 Volt oder 0,4 C. G. S. nicht wesentlich überschreiten. Direkt gemessen hat C den Wert 46 cm., man erhält folglich

$$e = 4 \pi \lambda C V' = 23 \times 10^{-4} \text{ C. G. S.}$$

Ausser e interessiert es auch Min. V' kennen zu lernen. Nimmt man beispielweise an, dass Max. λ den Wert 8×10^{-4} erreicht, so hat man, wenn e den oben berechneten Wert hat, $V' = \frac{e}{4 \pi \lambda C} = 0.005$ C. G. S. oder 1.5 Volt.

Gibt man Gleichung (II) die Form $\lambda = \frac{e}{4 \pi C V'}$, und differenziert, so erhält man

$$\text{(III)} \qquad \frac{\delta \lambda}{\delta V'} = - \frac{e}{4 \pi C (V')^2}$$

Das heisst, je grösser V' wird, desto kleiner wird das einem gegebenen $\delta V'$ entsprechende $\delta \lambda$. Die Empfindlichkeit nimmt also mit steigendem V' zu.

Setzt man in die obige Gleichung die Werte von C und e ein, so bekommt man

$$\frac{\delta \lambda}{\delta V'} = - 4 \times 10^{-6} \cdot \frac{1}{(V')^2}$$

Für $\delta \lambda = 1$ erhält man:
wenn $V' = 10$ Volt, $\delta \lambda = - 1 \cdot 2 \times 10^{-5}$
wenn $V' = 100$ Volt, $\delta \lambda = - 1 \cdot 2 \times 10^{-7}$

Wenn man die Aufladungszeit t mit in Rechnung bringt, so gilt, wenn, wie oben vorausgesetzt, der Isolationsverlust sehr klein ist, die Gleichung

$$\text{(IV)} \qquad (c + C)\ V = c\ t - 4\ \pi\ \lambda\ C\ \frac{V}{2}\ t,$$

wobei C die Kapazität des nicht aktiven Teiles des Systems bedeutet, $c + C$ also die Gesamtkapazität ist. Wird in dieser Gleichung $V = V'$ gesetzt, so gibt t die Zeit t' an, welche nötig ist, um den in der Gleichung $c = 4\ \pi\ \lambda\ C\ V'$ ausgedrückten Gleichgewichtszustand zu erreichen; es ist

$$(c + C)\ V' = t'\ (c - 2\ \pi\ \lambda\ C\ V')$$

Setzt man $c = 4\ \pi\ \lambda\ C\ V'$ ein, so erhält man

$$c + C = t'\ 2\ \pi\ \lambda\ C$$

und somit:

$$\text{(V)} \qquad t' = \frac{c + C}{2\ \pi\ \lambda\ C}$$

Bei konstantem λ ist also t' nur von dem Verhältnisse $\frac{c + C}{C}$ abhängig. Wenn c so klein ist, dass es gegen C vernachlässigt werden kann, dann ist in diesem Falle die Aufladungszeit am kleinsten; man hat dann

$$t' = \frac{1}{2\ \pi\ \lambda}$$

Untersucht man die Trägheit des Registriersystems oder die Variationsgeschwindigkeit, so bildet man

$$\text{(VI)} \qquad \frac{\delta\ t}{\delta\ \lambda} = -\ \frac{c + C}{2\ \pi\ C\ \lambda^2}$$

Je kleiner λ ist, desto grösser wird also die Trägheit, oder je grösser V' ist, desto langsamer stellt sich das Elektrometer ein.

Beispiel:

Bei der hier genannten Messanordnung hat c direkt gemessen den Wert 43 cm.
Setzt man $\delta\ \lambda = 0.1 \times 10^{-4}$, so hat man, indem man $\lambda = a_\lambda \times 10^{-4}$ setzt:

$$\delta\ t' = 0.308 \cdot \frac{0.1 \times 10^{-4}}{(a_\lambda \times 10^{-4})^2} = \frac{308}{a_\lambda{}^2}$$

Für $a_\lambda = 0.5$ erhält man: $\delta\ t' = 1232$ sek $= 20^{m}\ 32^{sek}$
Für $a_\lambda = 1.0$ erhält man: $\delta\ t' = 308$ sek $= 5^{m}\ 8^{sek}$
Für $a_\lambda = 5$ erhält man: $\delta\ t' = 12.3$ sek

Wenn λ klein ist, so ist also $\delta\ t$ ziemlich gross.

Skalenwertbestimmung. Die oben entwickelten Gleichungen gelten, wie schon oben gesagt, nur exakt, wenn der Isolationsverlust sehr klein ist. Da man allgemein jedoch von diesem Verlust kaum ganz absehen kann, so können die oben erwähnten Gleichungen nicht ohne weiteres zur Berechnung der Skalenwerte benützt werden. Hierzu kommt noch, dass die geeignetsten Gleichungen (I) und (II) Konstanten enthalten, die auf direktem Wege sehr schwer genau zu bestimmen sind. Man verfährt dann selbstverständlich am besten so, dass man den Skalenwert durch Verifizierung mit einem geeigneten Apparat direkt in λ bestimmt. Die so bestimmte Skala ist dann, solange der Isolationsverlust konstant bleibt, in allen Fällen gut verwendbar. Ist die Skala auch in Volt bekannt, so besitzt man die nötigen Daten, um die oben genannten Konstanten zu berechnen, und die Gleichung der Skala ist somit vorhanden.

Kontrollmessungen. Wenn bei der Verifizierung das Verhältnis der Konstanten c und C (Gl. II) oder $\frac{c}{C}$ für alle Werte von λ dasselbe bleiben, so erfüllt das Registriersystem die oben genannten Forderungen:

$$\frac{c}{C} = 4\ \pi\ \lambda\ V' = \text{Konstant}$$

Hier ist zu bemerken, dass C bei abnehmendem λ oder steigendem V' ein wenig abnehmen muss, denn es ist ja unmöglich, die Elektrode an allen Stellen so weit von den umgebenden Gegenständen entfernt zu haben, dass sie überall freien Strom gibt. Dieser Umstand bewirkt, dass der aktive Teil der Elektrode und somit auch C bei steigendem V' vermindert wird. Selbst bei einer gut angeordneten Elektrode ist also C nur ungefähr eine Konstante. Man muss auch darauf achten, dass der Isolationsverlust mit der Spannung steigt, sodass V' bei höheren Werten einen Zuschlag haben muss, um C richtig zu erhalten.

Um den Isolationsverlust mit in Rechnung zu bringen, muss man den Isolationswiderstand m' bestimmen. Dies kann auf folgende Weise geschehen; man bestimmt λ mit ungeändertem System; man hat dann, indem man m' einführt

$$e = 4\,\pi\,\lambda\,C\,V' + \frac{V'}{m'}$$

Ist nun die Elektrode so eingerichtet, dass ein Teil derselben entfernt werden kann — in Ås ist es der Fall — so kann man mit einer anderen Kapazität C' beobachten. Wird nun die Leitfähigkeit aufs neue bestimmt und nennt man die am Registrierelektrometer jetzt abgelesene Spannung V'', so hat man

$$e = 4\,\pi\,\lambda'\,C'\,V'' + \frac{V''}{m'}$$

Aus diesen zwei Gleichungen erhält man

$$\text{(VII)} \qquad m' = \frac{V'' - V'}{4\,\pi\,(\lambda\,C\,V' - \lambda'\,C'\,V'')}$$

Bei einer gut angeordneten Elektrode ist der berechnete Wert von C nur wenig von dem direkt bestimmten verschieden; bei Berechnung von m' ist es deshalb hinreichend genau, die direkt bestimmten Werte von C und C' einzusetzen.

Zeigt die Verifizierung, dass $\frac{e}{C}$ mit der Windgeschwindigkeit sich ändert und zwar derart, dass sie mit steigender Windstärke und abnehmendem λ immer kleiner wird, so bedeutet dies, dass die Elektrode oder ein grösserer Teil derselben dem Coulombschen Zerstreuungsgesetze nicht folgt und somit nicht freien Strom gibt. Es wird also mit zu hoher Spannung gearbeitet. Zieht man also die Windkorrektionen nicht mit in Rechnung, was die Auswertungsarbeit bedeutend erschwert, so muss also e um so viel herabgesetzt werden, dass e/C bei allen vorkommenden Werten von V' ungefähr konstant bleibt.

Instrumentenbeschreibung.

Die Messanordnung besteht aus einem Aufladeapparat, zwei Registrierelektrometern, einer Elektrode, den elektrostatischen Leitungen, einer Schleifkontaktanordnung, den Schutzanordnungen, und einer Registrieranordnung.

Der Aufladeapparat. Die Zufuhr der Elektrizität zum Messsystem geschieht mechanisch mittels eines unten näher beschriebenen Aufladeapparates. Dieser Apparat wird mittels einer speziell gebauten, mit zwei kräftigen Treibfedern versehenen Pendeluhr getrieben. Die Uhr ist in zwei Teile geteilt. Der eine Teil (das mit dem Aufladeapparate verbundene Uhrwerk) ist in der in dem Instrumentenraume befindlichen Kapsel C (siehe Fig. 16, 1) aufgestellt; der andere, aus der Zeiger- und Aufziehanordnung bestehende Teil (U. Fig. 16), befindet sich in dem Registrierraume. Von den an der oben genannten Figur befindlichen Stangen g und g', die von dem Uhrwerke nach der Uhrscheibe führen, dient die eine zum Treiben der Uhrzeiger, die andere zum Aufziehen des Uhrwerkes.

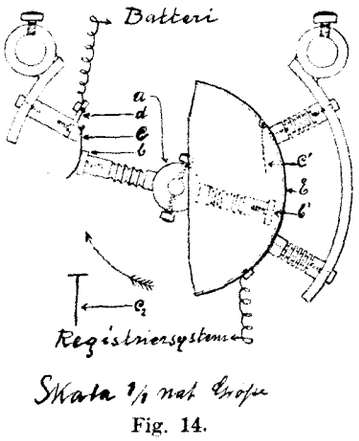

Fig. 14.

An der Achse des Sekundenrades der oben genannten Uhr ist ein Isolator von der in Fig. 14 a gezeigten Gestalt befestigt. An jedem Ende desselben ist ein kleines Messing-

stückchen (Auflader) b und b′ befestigt. Wenn die Uhr im Gange ist, so bewegen sich b und b′ im Kreise und berühren abwechselnd die Schleifkontakte C und C′. Diese Kontaktstücke sind in den Lagern sehr leicht beweglich, sodass die Friktion bei dem Passieren der Auflader sehr klein wird. Die Schleifkontakte sind aus dünnem Messingdraht angefertigt und

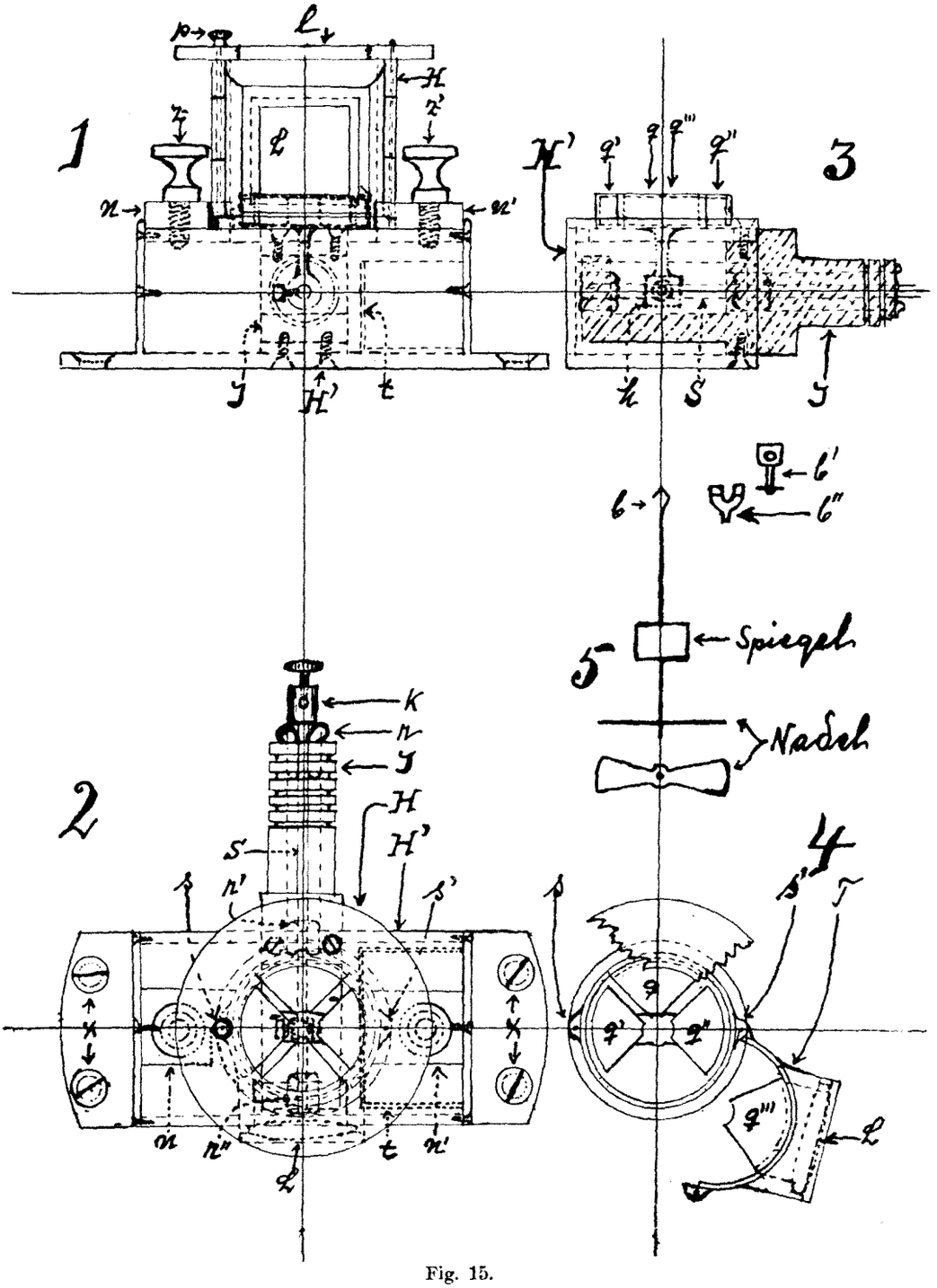

Fig. 15.

haben von der Seite gesehen, die bei c_2 angegebene Form. Der Konduktor d ist mit der Ladebatterie verbunden, der Sammelkonduktor E mit dem Registrier- oder Messsystem. Wie man aus der Figur ersieht, hat E die Gestalt einer halben, in der Mitte durchgeschnittenen, runden Dose. Im Inneren des so entstandenen Hohlraumes befindet sich der Schleifkontakt C′. Die übrigen Einzelheiten gehen aus der Figur hervor.

Wenn die Uhr geht und die Batterie eingeschaltet ist, so wird also Elektrizität von d nach E transportiert. Die Ladebatterie teilt somit den Aufladern eine gewisse elektrische Ladung mit, welche ganz in den Hohlraum von E abgegeben wird. Mittels dieser Anordnung wird also dem Registriersysteme eine bestimmte Elektrizitätsmenge e pro Zeiteinheit zugeführt: e ist somit der in den oben entwickelten Formeln befindlichen Grösse e gleich.

Bei der Konstruktion dieses Apparates ist Rücksicht darauf genommen, dass die Lader auf einmal eine derart grosse Ladung nicht mit sich führen, dass das Elektrometer dadurch merklich beunruhigt wird.

Die Ladebatterie besteht aus gewöhnlichen, grossen Trockenelementen. Die Batteriespannung, die ungefähr 90 Volt beträgt, wird mittels eines eigenen Elektrometers registriert.

Die Registrierelektrometer. Die zwei Registrierelektrometer, von welchem das eine die Leitfähigkeit, das andere die Batteriespannung registriert, sind gleichgebaute Kvadrantelektrometer von relativ kleiner Kapazität. Die äusseren Teile (Gehäuse, Fussring etc.) sind, Arretier- und Ablese-Anordnung ausgenommen, auf dieselbe Weise wie bei dem oben beschribeenen Schwingungselektrometer gebaut.

Die Figur 15 1, 2, 3, 4 zeigt das Gehäuse und die damit verbundenen Anordnungen; 5 zeigt das Gehänge.

Das untere Gehäuse H′ ist mittels der Schrauben x an dem Fussringe befestigt. Es enthält das Trockenmittelgefäss t. Das obere Gehäuse H (innerer Durchmesser 3 cm.) enthält die Quadranten und das Gehänge (Nadel, Spiegel etc.). Die Klemmstückchen n, n′ dienen dazu, die Häuser (H und H′) fest zusammenzuhalten. Die an dem Gehäuse H angebrachte Tür T (4) dreht sich an der Türangel s′ (2, 4). Die Tür kann in der Weise verschlossen werden, dass man, wenn sie ganz zu ist, den Stift p (1) in das hängenförmige Schloss s (2, 4) hineinsteckt. Die Sammellinse L ist in der Tür angebracht.

Die Suspensionsröhre (Länge etwa 30 cm.) ist oben mit isoliertem Torsionskopfe und unten mit einer ganz einfachen Arretieranordnung versehen. Der Suspensionsdraht ist aus gezogenem, hartem Kupferdraht hergestellt. Die Länge und der Durchmesser desselben betragen 25 cm., beziehungsweise 0.05 mm.

Die Konstruktion der Nadel und der Aufhängeanordnung geht aus Fig. 15 (5) b, b′, b″ deutlich hervor.

Der Isolator I, welcher in dem unteren Gehäuse H′ festgeschraubt ist, ist von feinster Konstruktion (siehe oben unter I). Durch die Ravstopfen r, r′ r″ (2) führt die Leitungsstange S, welche die Klemmschraube K und die Quadrantenträger h (3) trägt. An dem letztgenannten Träger sind die zwei Quadranten q′, q″ (3, 4) befestigt. Der Quadrant q‴ ist an die Tür T festgeschraubt. Der Quadrant q ist an der Wand des Gehäuses H aufgelötet.

Das äussere Ende des Isolators I wird mittels eines elektrischen Heizapparates gegen Feuchtigkeit geschützt. Die Konstruktion und die Unterbringung eines solchen Heizapparates ist in der Physikalischen Zeitschrift, 9. Jahrgang, No. 25, Seite 920—921, beschrieben worden.

Das Elektrometer, welches die Leitfähigkeit misst (in Fig. 16 mit λ bezeichnet), hat. Quadrantenschaltung. Die Brennweite der Registrierlinse beträgt 1.1 m. Das andere Elektrometer (in der oben genannten Figur mit V bezeichnet) misst die Batteriespannung. Es ist doppelt geschaltet. Die Brennweite der Linse beträgt 1.5 m.

Die Elektrode. Die Expositionsanordnung des Registriersystems oder die Elektrode (siehe Fig. 16, 1 und 2) besteht aus einer Messingröhre (Achse) E, deren Länge und Durchmesser 2.2 m. beziehungsweise 15 mm. ist, und zwei aus Messingdraht hergestellten Zerstreuungskörpern e und e′. Die Gestalt von e ersieht man deutlich aus der Figur. Der Körper e′ hat, von oben gesehen, die in der Hilfsfigur 2 gezeigte Form. Die Länge jedes der 4 Seitendrähte ist ungefähr 70 cm. Die Hülsen der beiden Zerstreuungskörper laufen frei um die Achse (E) und sind von zwei an E befestigten Nuten unterstützt. Sie können somit um die Achse gedreht werden. Diese Anordnung ist eine Sicherheitsmassregel für den Fall, dass die Zerstreuungskörper, wenn der

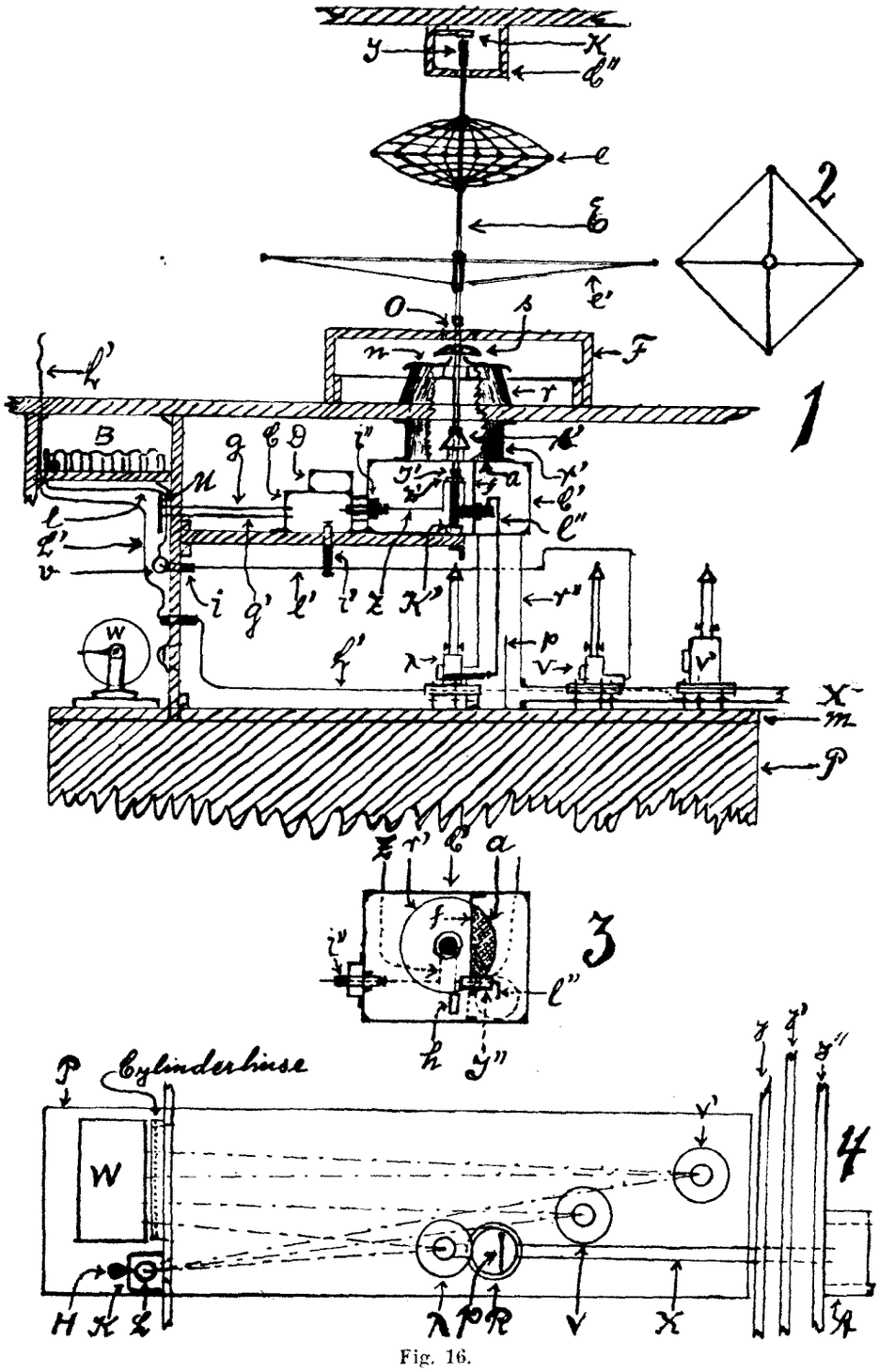

Fig. 16.

Die obige Figur gibt eine Gesamtdarstellung der ganzen Messanordnung.

1 stellt einen Vertikalschnitt durch den Registrierkeller und den oberen Teil des Kuppeldaches dar. Der Schnitt geht durch den Instrumentensockel P, das Elektrometer, den Heizapparat D und die Kapseln C, C′, F, C″. Die Kapseln s′ und r sind durchbrochen, sodass man den unteren Teil der Elektrode unmittelbar erblicken kann.

Die Hilfsfigur 2 zeigt e′ von oben.

Die Hilfsfigur 3 zeigt die Kapsel C′ samt die in und auf derselben befindlichen Anordnungen von oben gesehen.

4 zeigt den Instrumentensockel mitsamt den unmittelbar auf demselben stehenden Instrumenten und Apparate vonoben. Die Elektrometer sind durch nur zwei konzentrische Kreise markiert. y, y′, y″ sind die Aussenwände des Kellergebäudes. A ist eine Blechkapsel die das äussere Ende der Ventilationsröhre x gegen Niederschlag schützt.

Drehmechanismus (siehe unten) im Gange ist, in irgend einer Weise festgehalten und die Elektrode somit zerstört werden könnte.

Die Elektrodenachse ist an den beiden Enden mit stabförmigen Ebonitisolatoren I und I′ versehen. Diese Isolatoren, deren Länge ungefähr 15 cm. beträgt, sind an den äusseren Enden mit federnden Kugellagern versehen, sodass die Elektrode leicht um die Achse gedreht werden kann. Das eine (das untere) Lager K′ ist unten in der Kapsel C′ befestigt, das andere K ist oben in der Kapsel C″ angebracht.

Die Elektrode ist (wie die Scheringsche Elektrode) mit einer speziellen Dreheanordnung versehen. Dieselbe ist in die Kapsel C″ eingebaut. Sie besteht aus einem elektrischen Motor und einem zwischen Motor und Kugellagerachse angebrachten Radwerke. Das Radwerk setzt die Geschwindigkeit herab, sodass die Drehzahl der Elektrode ungefähr 1 in der Sekunde wird. Diese Anordnung ist notwendig, um die Spinnen wegzuhalten.

Die Achse ist nur mit den zwei oben genannten Isolatoren versehen; sie läuft also frei an allen anderen Stellen. Die an derselben befindlichen, gewölbten Schalen s und s′ schützen die inneren (unteren) Teile der Messanordnung gegen Wasser, Schnee und andere Fremdkörper.

Die Elektrode ist oben von einem auf Eisenpfeilern ruhenden, kuppelförmigen Dache, von welchem ein Bruchstück zuoberst in der Fig. 16, 1 gesehen werden kann, geschützt. Von den Seiten ist sie mittels eines an den oben genannten Pfeilern ausgespannten Drahtnetzes geschützt.

Der Zerstreuungskörper e′ hat eine Höhe von ungefähr 2.5 m. über dem Erdboden.

Die elektrostatischen Leitungen (Fig. 16, 1 und 2). Vom positiven Pole der Batterie B führt die Leitung l nach dem einen Ende des Wasserwiderstandes v. Das andere Ende des Widerstandes ist mit der durch den Wandisolator i führenden Leitung l′ verbunden. Diese Leitung ist direkt mit dem Elektrometer V verbunden. Eine Abzweigung dieser Leitung führt durch den Isolator i′ in die Uhrkapsel C hinein, wo sie mit dem Konduktor des Aufladeapparates verbunden ist. Von dem Sammelkonduktor dieses Apparates führt eine Leitung durch den Isolator i″ nach der Schleifkontaktanordnung Z (siehe unten). Die Schleifkontaktanordnung ist mit der Leitung l″ verbunden. Das untere Ende von l″ führt nach dem Elektrometer.

Die Schleifkontaktanordnung. Die Verbindung zwischen dem elektrostatischen Leitungssysteme und der Elektrode kann nur mittels einer speziellen Anordnung hergestellt werden, indem ja eine mit der rotierenden Elektrode feste Verbindung nicht möglich ist. Die Leitungsverbindung wird deshalb hier mittels einer Schleifkontaktanordnung hergestellt. Letztgenannte Anordnung ist so eingerichtet, dass sie auch als Unterbrecher dienen kann.

Die Schleifkontaktanordnung (siehe Fig 16 und Fig. 17) besteht aus einem an der Elektrodenachse E befestigten Schleifringe Z′ und einem aus Messingdraht hergestellten Schleifkontakte Z.

Der Schleifring ist aus Messing hergestellt.

Der Schleifkontakt hat die in der Fig. 17 angegebene Form. M und M′ sind zwei an Z festgelötete und an den Enden der dicken Messingleitungen U und W angebrachte Messingringe. N und N′ sind zwei an W und U befestigte, als Stützlager dienende Messingringe. h ist ein isolierender Handgriff. Mittels dieses Handgriffes kann der Schleifkontakt, ohne den elektrischen Zustand des Systems zu stören, um U und W gedreht werden.

Stellt man den Schleifkontakt so ein, dass er an dem Schleifringe (bei S) anliegt, so ist die Leitungsverbindung hergestellt; dreht man denselben auf, so ist sie unterbrochen.

Der den Schleifkontakt stützende Durchführungsisolator I″ hat, wie man aus der Figur sieht, eine von dem früher beschriebenen Normaltypus abweichende Konstruktion. Die Abänderung besteht darin, dass die an W angebrachte Klemmschraube K′ nicht frei herausragt, sondern in die in dem Ebonitkörper ausgefräste, mit Paraffin ausgegossene Höhle H′ endet. Die Abänderung ist vorgenommen, damit der Widerstand des Isolators sich in wechselnder Feuchtigkeit möglichst konstant halten soll. Der aus Paraffin bestehende Teil befindet sich

nämlich in dem ventilierten Abschnitte der Kapsel C′, wo die Feuchtigkeit ziemlich stark wechseln kann.

Schutzanordnungen (siehe Fig. 16, 1, 3 und 4). Die Wände des Instrumentenraumes sind nicht dicht genug, um das Eindringen von Kellerluft in den Instrumentenraum zu verhindern. Um die Einwirkung dieser Bodenluft auf das innere elektrostatische System zu vermeiden, sind die Apparate und Leitungen von geräumigen Metallkapseln und Metallröhren umgeben. Die Kapseln und die Röhren sind derart mit einander verbunden, dass sie einen ganzen, mit der Aussenluft verbundenen Kanal bilden. Die Wärme des Raumes bewirkt dann, dass ein stetiger Strom von frischer Luft den Kanal durchfliesst und eventuell eingedrungene Emanationen mit sich fortführt.

Die Ventilationsluft passiert erst die mit Löchern versehene Kapsel A (4), dann fliesst sie in die Röhre x (1 und 4) ein. Das äussere Ende dieser Röhre ist zum Schutze gegen eindringende Spinnen mit einem feinmaschigen Drahtnetze versehen. x mündet in die weite Röhre r″ aus. Die einströmende Luft wird an der Scheidewand p aufwärts getrieben, sodass sie den Isolator des λ-Elektrometers nicht direkt bestreichen kann. Der Klemmschraube des letztgenannten Instrumentes gegenüber ist auf r″ eine kurze, offene Röhre angelötet; diese Röhre ist mittels eines kurzen, weiten Gummischlauches mit dem elektrischen Heizapparate des Elektrometers verbunden.

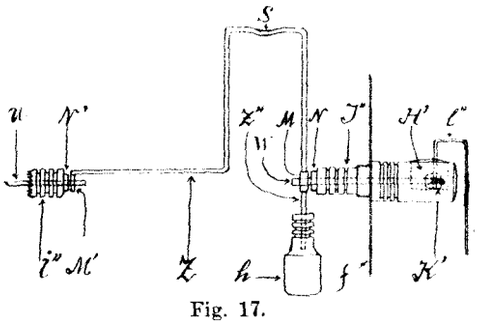

Fig. 17.

r″ mündet in die Kapsel C′ (1 und 3) aus. Diese Kapsel ist mittels der Wand f (1 und 3) in zwei Räume geteilt. Jeder Raum hat eine grosse Öffnung, die mittels einer dichtschliessenden Schiebetür geschlossen werden kann. Der links gelegene, nicht ventilierte Raum wird künstlich ausgetrocknet. Der rechts gelegene Raum wird ventiliert. Die Ventilationsluft strömt hier aufwärts und tritt durch das feinmaschige Netz (Spinnenschutz) a (1 und 3) in die sehr weite Röhre r′ ein; von dort zieht sie durch das im Kellerdache ausgesägte, grosse Loch in die konische Holzröhre r ein. Diese Röhre hat oben ein mit Zinkblech gedecktes Dach. Inmitten des Daches ist ein relativ grosses Loch, das, ausser als Durchgangsstelle für die Elektrodenachse auch als Ventilationsöffnung dient. Der das Loch begrenzende Rand des Zinkblechdaches ist aufgebogen, sodass von der Schutzschale s eventuell abtropfendes Wasser nicht in r eindringen kann. Von der grossen Schutzkapsel F entweicht so die Ventilationsluft durch das geräumige Loch O in das Freie hinaus.

Die Kapsel C (1) schützt das Uhrwerk und die damit verbundenen elektrostatischen Anordnungen gegen schädliche Einwirkungen von aussen. Sie hat zwei dichtschliessende Schiebetüren, und sie ist, um die relative Feuchtigkeit im Inneren niedrig zu halten, mit einem elektrischen Heizapparate D (1) versehen.

Die Kapsel C″ hat an der einen Seite eine dichtschliessende Tür und ist inwendig mit Holzplatten (statt Löschpapier) bekleidet. Sie wird künstlich ausgetrocknet.

Die Registrieranordnung. Die Registrierung geht auf photographischem Wege vor. Die Registrieranordnung besteht aus einem Registrator, einer Beleuchtungsanordnung und einer Zeitmarkenanordnung.

Der Registrator (Fig. 18) ist, wie aus der Fig. 16 hervorgeht, an dem vorderen Ende des Instrumentenpfeilers (P) aufgesetzt.

Die Registrierwalze W ist, von den unten genannten Abänderungen abgesehen, wie eine gewöhnliche Barographen- oder Thermographenwalze gebaut. Die Dimensionen der Registrierfläche sind für ein Registrierpapier 25 × 64 cm.

Die Registrierwalze ist um die feste Achse A drehbar und kann in achsialer Richtung etwas verschoben werden. Das Uhrwerk U ist am Boden der Walze festgeschraubt. Es ist ein gewöhnliches Richardsches Thermographenuhrwerk, das mit einem Extrarad R″ versehen ist Dieses Rad greift bei passender Einstellung (Verschiebung) der Walze in das an A befestigte

Rad R′ ein. Die Grössenverhältnisse der Räder R′ und R″ sind derart beschaffen, dass die Walze eine Umdrehung am Tage macht. Wird der Mechanismus so eingestellt, dass die Räder R und r in einander eingreifen, so dreht sich die Walze in 7 Tagen einmal um sich selbst.

Die an der Walze befestigte Hülse H′ trägt ein Federgehäuse F′, dessen Feder den Stift F gegen die an A befestigte Hülse H einpresst. In H sind drei Rillen a, b, c eingedrechselt. In diese Rillen passt das innere Ende des Stiftes hinein. Die Walze kann deshalb nur verschoben werden, wenn F zurückgezogen und festgehalten wird. Steckt der Stift in die Rille a ein, so greifen die Räder R′ und R″ in einander ein, und die Walze dreht sich am Tage einmal herum; steckt er in Rille b, so greifen keine der genannten Räder in ein-

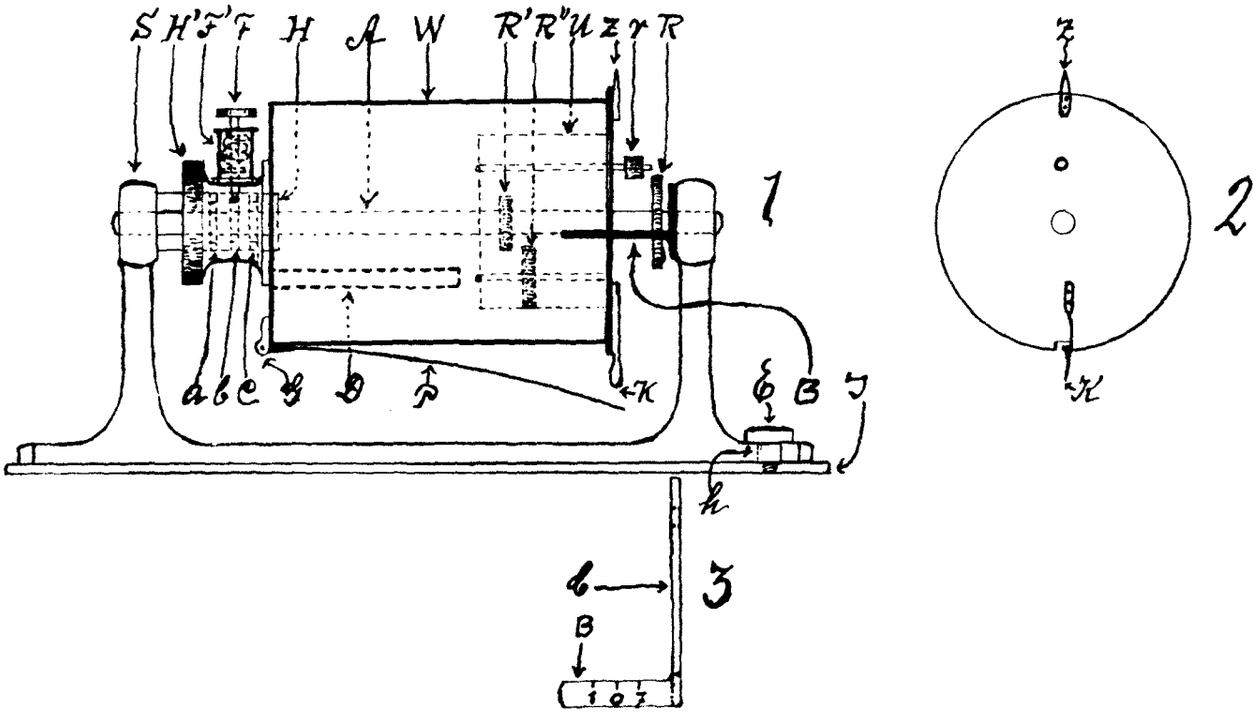

Fig. 18.

ander, und die Walze kann frei mit der Hand gedreht werden. Einstellung in Rille c entspricht Wochenregistrierung.

Um die Walze in jeder Hinsicht richtig und bequem einstellen zu können, ist der Registrator mit einer speziellen Einstellungsanordnung versehen. Dieselbe besteht aus einem Zeiger Z und einer Skala B. Die Hilfsfigur 2 zeigt den rechten Boden der Walze von aussen mit Z aufgesetzt. Hilfsfigur 3 zeigt B von oben. Die Skala ist mittels des Armes C an dem Stative S befestigt. Sie trägt, wie die Hilfsfigur 3 zeigt, drei Teilstriche. die mit den Zahlen 1, 0, 7 bezeichnet sind. Weist der Zeiger auf die Skala, so steht die Walze in Bezug auf die Registrierung in der Anfangsstellung; weist sie gleichzeitig auf eine der Zahlen 1 oder 7, so dreht sich die Walze in 27 Stunden beziehungsweise 7.6 Tage herum.

Das Registrierpapier wird mittels der Klemmfeder P auf die Walze befestigt. P kann um das an dem linken Boden der Walze festgeschraubte Scharnier gedreht werden, und es wird mittels des Hakens K an die Walze angeklemmt.

Das Stativ S ist durch die Brustschraube E mit der Fussplatte I verbunden. I ist am Boden des Registrierraumes festgeschraubt. Der Registrator kann um den Hals h der Brustschraube gedreht werden. Die Normalstellung desselben wird durch einen auf die Fussplatte befindlichen Knauf bestimmt. Mittels dieses Knaufes wird die Beweglichkeit des Registrators so begrenzt, dass das freie Ende desselben nur in die Richtung des Beobachters gedreht werden kann.

D ist eine Röhre, die als Führung für den Uhrschlüssel dient.

Die Beleuchtungsanordnung (siehe Fig. 16, 4) besteht aus einer elektrischen, geradedrahtigen Glühlampe L und einer 27 cm. langen Zylinderlinse von gewöhnlicher (etwa 2 cm.) Brennweite.

Die Glühlampe ist von einer geschwärzten Kapsel K umgeben. Die Kapsel ist an der, den Instrumenten zugekehrten Seite mit einer für die Beleuchtung des Instrumentenspiegels nötigen Öffnung versehen.

Um die Lichtstärke der Lampe regulieren zu können, ist ein regulierbarer Lampenwiderstand in die Lampenleitung eingeschossen.

Die Zylinderlinse ist, wie die Figur zeigt, in die Scheidewand eingesetzt. Sie hat den Zweck, die von den Instrumentenspiegeln reflektierten Bilder des Lichtdrahtes in Lichtpunkten auf der Registrierwalze zu sammeln.

Die Zeitmarkenanordnung dient dazu, die Registrierstreifen mit Zeitmarken zu versehen. Sie besteht aus einer dem Lampenfusse angeschlossenen Schiebeanordnung und einer elektrischen Kontrolluhr.

Die Schiebeanordnung besteht aus einem auf die Kapselwand befestigten Schlitten, welcher etwa 2 mm. winkelrecht an dem Beleuchtungsdrahte der Lampe verschoben werden kann. Der Schlitten wird mittels einer Feder in der normalen Stellung gehalten, sodass derselbe, wenn verschoben, immer von selbst in dieselbe Stellung zurückkehrt. Die Zeitmarkierung geht nun in der Weise vor, dass der Schlitten und somit auch die Beleuchtungslampe kurze Zeit aus der Normalstellung gehalten werden. Diese Operation verursacht erklärlicherweise eine Zacke (Zeitmarke) an allen auf das photographische Papier registrierten Kurven und Linien. Die Verschiebung des Schlittens kann entweder mit der Hand oder auf automatischem Wege vor sich gehen.

Die manuelle Zeitmarkierung geht in der Weise vor sich, dass man den am Schlitten sitzenden, durch die Kapsel K führenden Handgriff H verschiebt.

Die automatische Zeitmarkierung wird von einer elektrischen Kontrolluhr besorgt. Diese Uhr schliesst nämlich zu bestimmten Zeitpunkten einen elektrischen Strom, welcher auf ein in der Kapsel K installiertes, mit der Schiebeanordnung verbundenes Relais so einwirkt, dass der Schlitten verschoben wird. Die Elektromagneten des Relais sitzen auf der Kapselwand; der Anker ist an dem Schlitten befestigt.

Die Kontrolluhr ist eine speziell gebaute, starke, elektrisch getriebene Pendeluhr mit drei Kontaktanordnungen, von welchen eine einen minütlichen, eine einen stündlichen und eine einen sechsstündlichen (12, 6, 12, 6) Kontakt schliesst. Das Relais ist gewöhnlich mit der sechsstündlichen Kontaktanordnung verbunden. Die Dauer eines Kontaktes ist für den minütlichen 5 Sekunden, für den stündlichen 15 Sekunden und für den sechsstündlichen 4 Minuten.

Die Uhr ist nicht bloss für den hier genannten Zweck konstruiert, sondern dient überhaupt als Kontrolluhr für alle in dem Observatorium installierten Registrierinstrumente. Eine vollständige Beschreibung derselben soll jedoch noch aufgeschoben werden, bis man später eine vollständige Beschreibung des ganzen Zeitmarkungssystems geben kann.

JAHRBUCH

DES

NORWEGISCHEN METEOROLOGISCHEN INSTITUTS

FÜR

1924.

Herausgegeben

von

Dem Norwegischen Meteorologischen Institut.

Oslo.

Druck bei Gröndahl & Sön.

1925.

JAHRBUCH

DES

NORWEGISCHEN METEOROLOGISCHEN INSTITUTS

FÜR

1925.

Herausgegeben

von

Dem Norwegischen Meteorologischen Institut.

LIBRARY
OCT 8 - 1926
WEATHER BUREAU

Oslo.

Druck bei Gröndahl & Sön.

1926.

BEIHEFT
ZUM
JAHRBUCH DES NORWEGISCHEN METEOROLOGISCHEN INSTITUTS FÜR 1925

INSTRUMENTE UND APPARATE

FÜR

DIE LUFTELEKTRISCHEN UNTERSUCHUNGEN

AN DEM METEOROLOGISCHEN OBSERVATORIUM IN ÅS

VON

NILS RUSSELTVEDT

OSLO
DRUCK BEI GRÖNDAHL & SÖN — 1926