MONTHLY WEATHER REVIEW

Editor, EDGAR W. WOOLARD

VOL. 69, No. 4
W. B. No. 1325

APRIL 1941

CLOSED JUNE 3, 1941
ISSUED JULY 12, 1941

A SUMMARY OF TOTAL SOLAR AND SKY RADIATION MEASUREMENTS IN THE UNITED STATES

By IRVING F. HAND

[Weather Bureau, Washington, August 1940

The purpose of this paper is to present a summary to date of the total solar and sky radiation measurements made by the Weather Bureau and cooperating institutions and individuals; the data are presented in tabular form, and also graphically by 18 isopleths.

Stations.—Table 1 gives information about the solar radiation stations which are maintained by, or cooperate with, the Weather Bureau. A description of each of these stations will be found in the MONTHLY WEATHER REVIEW for December 1937, page 418.[1] Not all of the stations here listed have been included in the present summary: To obtain as equitable a distribution of stations throughout the United States as practicable, some were omitted which would have given too much weight to one region; again, at some of the cooperating stations, the register clock for one reason or another was kept either on standard time or on time so uncertain that considerable distortion occurred, causing an asymmetry of the record about the noon line. A distortion is noticeable on a few of the summaries here published, but in some cases is due to systematic fogginess during early morning, cloudiness just preceding sunset, or to other natural causes; it does not affect the values of the daily totals, but alters the diurnal distribution.

[1] Irving F. Hand. Review of United States Weather Bureau Solar Radiation Observations. MONTHLY WEATHER REVIEW 65: 415–441, 1937.

Instrumental equipment.—Table 1 also lists the instruments in use at the stations. At the present time, with the single exception of Miami,[2] Eppley thermoelectric pyrheliometers [3] of either the 10 or 50 junction types are used as receivers. In order to obtain as nearly uniform and accurate results as possible, this instrument has been designed to conform to the following specifications:

(1) It should be sensitive to radiation of wave lengths between 0.295 and 2.5μ. (See fig. 1.)

(2) It should be proof against wind, weather, and moisture.

(3) The receiving surface should remain of constant sensitivity.

(4) The receiving surface must be so designed that the reduction of its readings to gram-calories or other units will give comparable results with measurements taken elsewhere in accordance with standard pyrheliometric practice.

(5) The receiving surface must be nonselective in its reaction to radiation of different wave lengths.

[2] At Miami the Callendar electrical resistance pyrheliometer, recording on an automatic Wheatstone bridge, is used and has the advantage of a quartz cover. This instrument was described by H. H. Kimball in the MONTHLY WEATHER REVIEW, August 1914, pp. 474–487.

[3] Herbert H. Kimball and Hermann E. Hobbs. A new form of thermoelectric pyrheliometer. MONTHLY WEATHER REVIEW 51: 239–242. Also *Jour. Opt. Soc. Amer.* 10: 365–368, 1925.

TABLE 1.—*Pyrheliometric stations*

Station	Under direction of—	N. lat.		W. long.		Altitude	Instruments		Remarks
							Receiver	Recorder	
		°	′	°	′	*Feet*			
San Juan	U. S. W. B.	18	28	66	06	85	Eppley	Engelhard	Good exposure on narrow peninsula, but some interference from salt spray. Cooperation with Columbia University.
Miami	Dr. O. J. Sieplein	25	41	80	12	50	Callendar	Callendar	Fair exposure on Belle Isle, a narrow key just east of Miami.
New Orleans	Tulane University	29	56	90	07	100	Eppley	L. & N. potentiometer.	Good exposure; considerable cloudiness.
La Jolla	Scripps Institute of Oceanography.	32	50	117	15	85	do	Engelhard	Splendid exposure a few yards inland from Pacific Ocean. Early morning fogs prevail during part of year.
Riverside	University of California.	33	58	117	28	1,051	do	do	Excellent exposure in midst of citrus fruit region.
Fresno	U. S. W. B.	36	43	119	49	330	do	do	Good exposure at airport northern edge of city. The San Joaquin Valley has an exceedingly high percentage of sunshine.
Washington	do	38	56	77	05	397	do	Engelhard and L. & N. potentiometer.	Good exposure on second highest point in District of Columbia. 5¼ miles NW. of United States Capitol. Some vitiation from city smoke.
New York	do	40	46	73	58	180	do	Engelhrad	Fair exposure at Central Park Meteorological Observatory. Values vitiated by large city atmospheric contamination.
Lincoln	do	40	50	96	45	1,225	do	L. & N. potentiometer.	Excellent exposure on experimental farm, NE section of city. Results very representative of the Great Plains area. Some dust.
Chicago	do	41	47	87	25	688	do	Engelhard	Good exposure on roof of Rosenwald Hall, University of Chicago. A great deal of smoke.
Blue Hill	Harvard University	42	13	71	07	640	do	Engelhard and L. & N. potentiometer.	Excellent exposure on high ridge 10 miles south of Boston. With northerly component winds, some smoke contamination from Boston.
Twin Falls	U. S. Bureau of Entomology.	42	29	114	25	4,300	do	Engelhard	Good exposure on high plateau in rich farming country. Greatest elevation of any station here listed; exceeded only by Albuquerque where observations were recently begun.
Madison	U. S. W. B.	43	05	89	23	974	do	L. & N. potentiometer.	Excellent exposure, North Hall, University of Wisconsin. Rapid growth of city has added to atmospheric vitiation recently.
Friday Harbor	University of Washington.	48	32	123	01	15	do	Engelhard	Good exposure 50 miles NW. of Seattle directly on ocean; considerable fog interference.
Fairbanks	U. S. W. B.	64	52	147	39	500	do	do	Most northerly station of this kind in the world. Very little artificial contamination.

(6) The readings should not be influenced by temperature variations, that is, the sensitivity should be proportional only to the amount of incident radiation.

(7) The instrument should not reradiate to the sky.

(8) The receiving surfaces should be exposed to the entire sky hemisphere.

(9) The receiving surfaces should be flat.

(10) The hemispherical glass cover should be flawless, and of ample size to prevent "caustics" and shadow effects from striae.

When the instrument was designed, it was assumed that the cosine law would hold, that is, that the decrease in radiation with increased zenith distance would be proportional to the cosine of the zenith angle. Unfortunately, it has been found during calibrations of these instruments, and during an intensive study of their characteristics by Hoyt C. Hottel of the Chemical Engineering Department of Massachusetts Institute of Technology, that this law does not hold for low sun.

In the original description of this pyrheliometer, Kimball[4] mentions an apparent paradox, as follows:

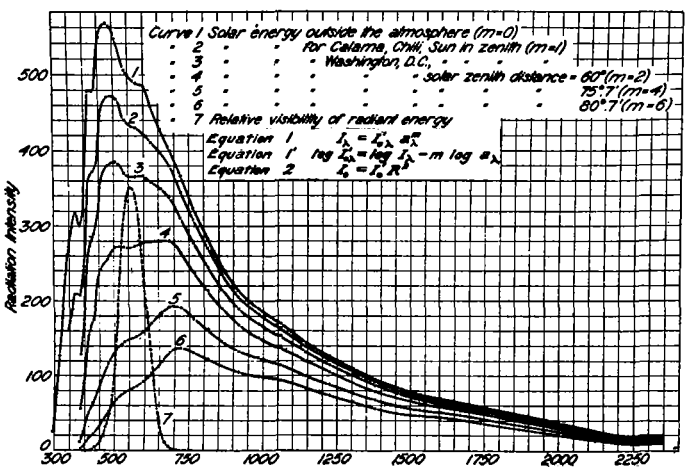

FIGURE 1.—Normal spectral curves of solar radiation; I, outside the atmosphere; II, air mass 1.1 (Zenith distance, Z=25°); III, air mass 2.0 (Z=60°); IV, air mass 3.0 (Z=70.7°); V, air mass 5.0 (Z=78.7°); VI, visibility curve for solar radiation; VII, energy curve for skylight, Mount Wilson, Calif.

"The efficiency of the thermopile appears to increase with temperature difference." "A slight tendency is noted for the thermopile to read relatively low in the middle of the day." Actually, however, these two statements may be correct; for while the efficiency of the thermopile may increase at noon when we expect the maximum radiation of the day, the tendency for the relatively lower readings at this time may be because the tips of the hemispherical glass covers always lack the optical perfection of the remainder of the glass.

In order to minimize the errors just mentioned we have weighted the calibration factors so that the final calculations of the total radiation for the day are very close approximations to the true values. However, should values of great precision be required, it is necessary to use a variable factor for different altitudes of the sun. For purposes of solar climatology, however, the use of variable factors is not warranted; therefore all values here given have been obtained by the employment of a fixed factor for each combination of pyrheliometer and recorder.

The recording instruments in use at the stations here described, include both the recording potentiometer,[1] which eliminates almost entirely errors arising from free air and other temperature changes; and the recording microammeter.[1] When the latter instrument is used, enough external resistance is inserted in the circuit to avoid excessive errors arising from temperature changes of all kinds. Both instruments are rugged; and with ordinary care, such as should be given any physical instrument, will function without undue trouble for many years.

Distribution of records.—Stations for making this type of measurement have been successively established during a long interval, and it therefore is impracticable to obtain means for the same number of years at each station. The records for the 4 years 1936–39 were tabulated for 11 of the stations; and for considerably longer periods for some of the stations which have been in operation longer and where the data are considered of major importance. Only 3 years' records from San Juan have been tabulated, as that station was opened in 1936 and the records for 1939 are defective.

When interpreting the records it should be borne in mind that this period of 1936–39, inclusive, was one of generally higher than normal solar radiation in the United States.[5] Four-year means may vary considerably from means of 20 or more years. With data from only 4 years, a single outstanding week of continual sunshine or of continual cloudiness can create marked irregularities in the isopleths that are without significance; but with isopleths based on data over many years, as in the case of Washington, Chicago, and Lincoln, and also the composite of 10 stations, considerable significance must be attached to the irregularities.

Interpretation of the records.—At the stations in the continental United States maintained by the Weather Bureau, the maximum radiation during the year occurs during the week beginning July 2, with the single exception of Madison where the maximum occurs a week later. In fact, a midsummer secondary minimum occurs close to the time of the summer solstice at most stations; La Jolla and Miami—both coastal stations—are notable exceptions.[1]

The percentage departures of the new long-period means from the means of all values up to and including 1936 at Washington, Lincoln, and Chicago are +1, −1, and +1 respectively. The 4-year mean departures from the means of all values up to and including those for 1936 are considerably greater at the other stations; and generally are plus, notably at New Orleans, La Jolla, and Fresno. Plus departures are to be expected in a period when no volcanic eruptions occurred of the type that emits dust into the stratosphere in large quantities; the eruptions of Krakotoa in 1883, Pelée in 1902, and Katmai in 1912 were each followed by a marked decrease in solar radiation receipt at the surface of the earth.[6] The average plus departures of the stations here tabulated are close to the average plus departures of normal incidence radiation for the same period at Washington, Madison, Lincoln, and Blue Hill.[6] Should one wish to convert these 4-year averages to values more closely approximating long-period means, the use of the factor 0.97 is suggested.

On the average for all stations, the mean of the maximum and minimum weekly values departs from the annual mean by 3 percent. New York, Blue Hill, Fresno, and Miami show the largest departures. At New York there is considerable smoke during most of the year, with a few weeks outstanding for their relative clearness.

[1] Irving F. Hand, Review of United States Weather Bureau Solar Radiation Observations. MONTHLY WEATHER REVIEW 65: 415–441, 1937.

[4] Kimball, Herbert H., and Hobbs, Hermann E. A New Form of Recording Pyrheliometer. MONTHLY WEATHER REVIEW 51: 239–242, 1923.

[5] Irving F. Hand. Variation in Solar Radiation Intensities at the Surface of the Earth in the United States. MONTHLY WEATHER REVIEW, 67: 338–340, 1940.

[6] Irving F. Hand. Variation in Solar Radiation Intensities at the Surface of the Earth in the United States. MONTHLY WEATHER REVIEW 67: 338–340, 1939.

This might explain to some extent why the mean of the maximum and minimum weeks is relatively higher than otherwise would be expected. The same explanation serves for Blue Hill, where smoke from Boston affects the values when the wind has a northerly component. At Fresno we assume that the departure is negative for reasons exactly the opposite to those just given; that is, this station has exceptionally clear skies during most of the year. We believe the apparent discrepancy at Miami may be because at this station pyrheliometric apparatus of foreign manufacture was substituted some years ago for the original equipment and there is some uncertainty as to the pyrheliometric scale upon which this latter apparatus was calibrated. The annual mean of the composite group of 10 stations used in the composite plot is only 0.1 percent higher than one-half the sum of the maximum and minimum weeks.

The effect of latitude is markedly shown by the fact that during the week beginning December 3 the average radiation at San Juan is 73 times that at Fairbanks; the average weekly radiation at San Juan for the year is only 1 percent less than the maximum weekly radiation at Fairbanks; this latter value is 88 times the minimum weekly radiation at that station. At San Juan the maximum value is only twice as great as the minimum. Fairbanks is the most northerly station in the world at which this type of measurement is regularly made.

Angot [7] has prepared extensive tables giving the relative amounts of radiation which would be received on a horizontal surface at all latitudes were there no atmosphere. According to these tables we would expect 1.73 times as much radiation at San Juan as at Fairbanks, were there no atmosphere. Actually the values for San Juan are 2.30 times as large as the Fairbanks values. The average yearly cloudiness at Fairbanks is 6.4 and at San Juan it is 4.9, on a basis of 10 for total cloudiness. These values satisfy very closely the proportion, 2.30:1.73: :6.4:49; but we would not expect, nor do we find, such close agreement between stations where the atmosphere is vitiated by local fog, smoke, dust, etc., or where differences in altitude are great. In general, Angot's tables cannot be used to estimate with precision the radiation receipt at any given point.[8] For example the annual radiation receipt at Fresno is 26 percent greater than that at New Orleans, although the latter station is 7° lower in latitude. Likewise the Twin Falls values are 37 percent higher than the Chicago values, although both stations are close to the same latitude.

[7] Angot. *Ann. Bur. Cent. Météorol.*, Pt. 1, 1883.
[8] Mayerson, H. S. and Laurens, Henry. Total solar radiation at New Orleans, La. MONTHLY WEATHER REVIEW, 62: 281-286, 1934.

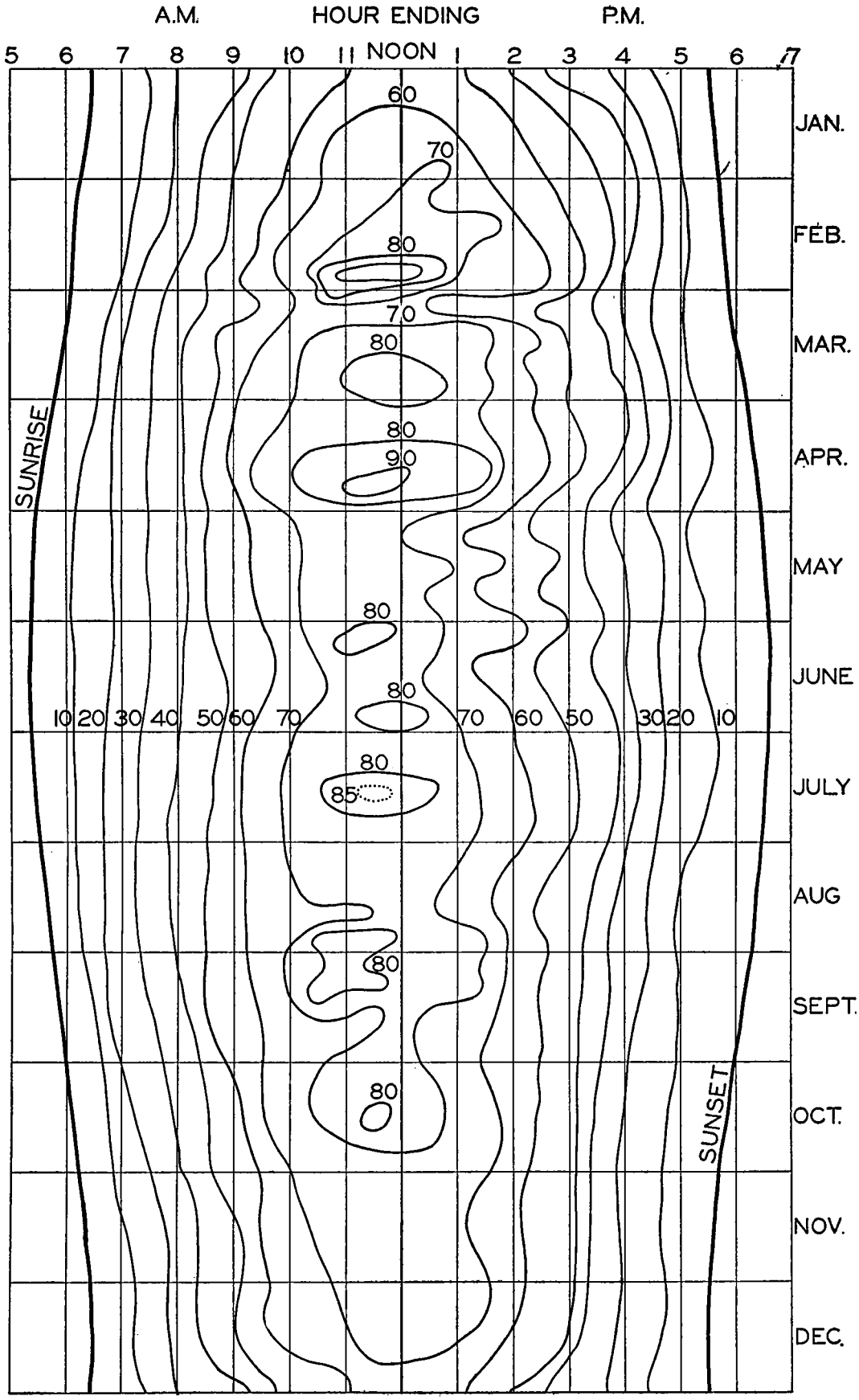

FIGURE 2.—Isopleth showing average hourly total solar and sky radiation on a horizontal surface, gram-calories per square centimeter, at San Juan, throughout the year. See table 2.

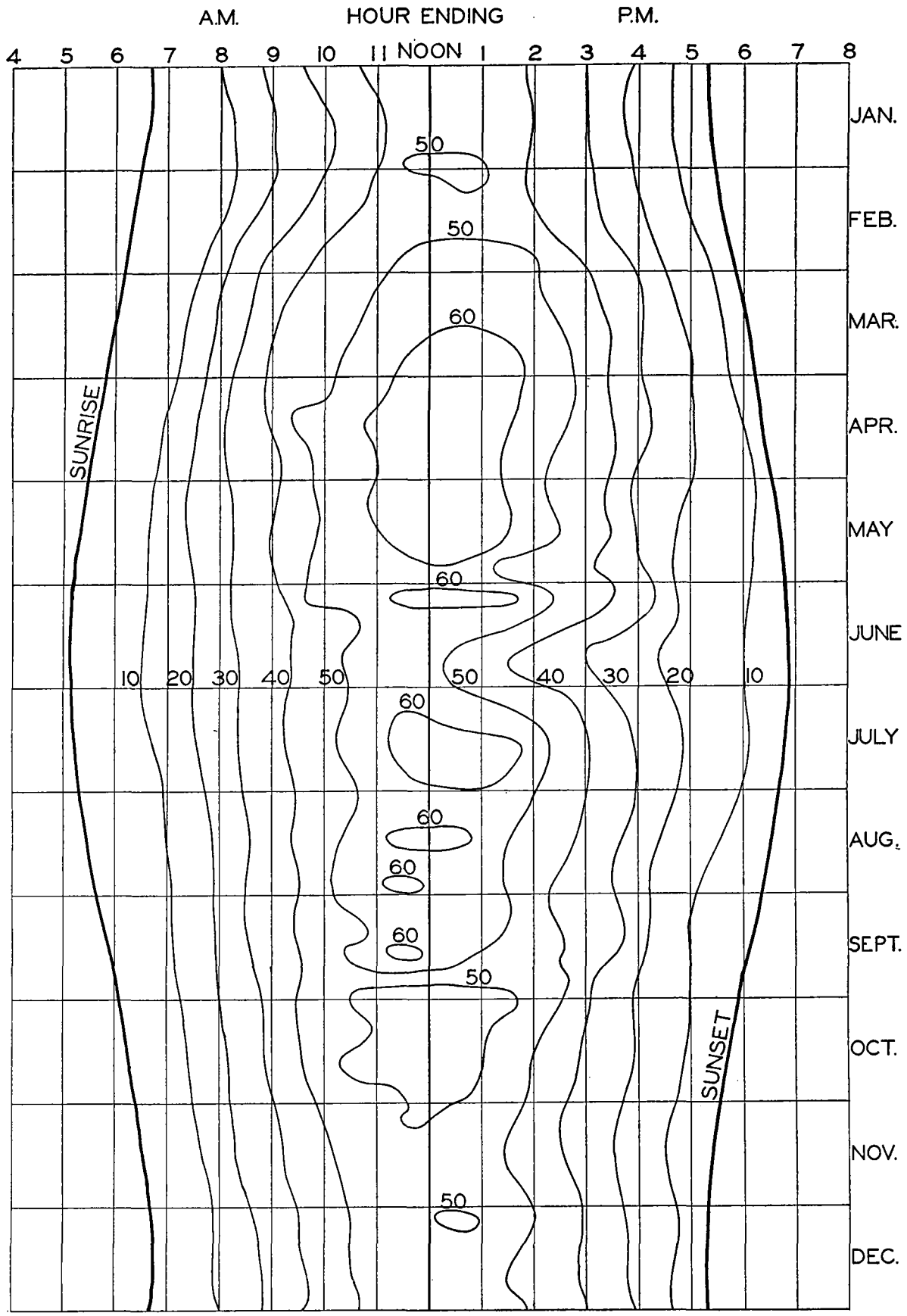

FIGURE 3.—Isopleth showing average hourly total solar and sky radiation on a horizontal surface, gram-calories per square centimeter, at Miami, throughout the year. See table 3.

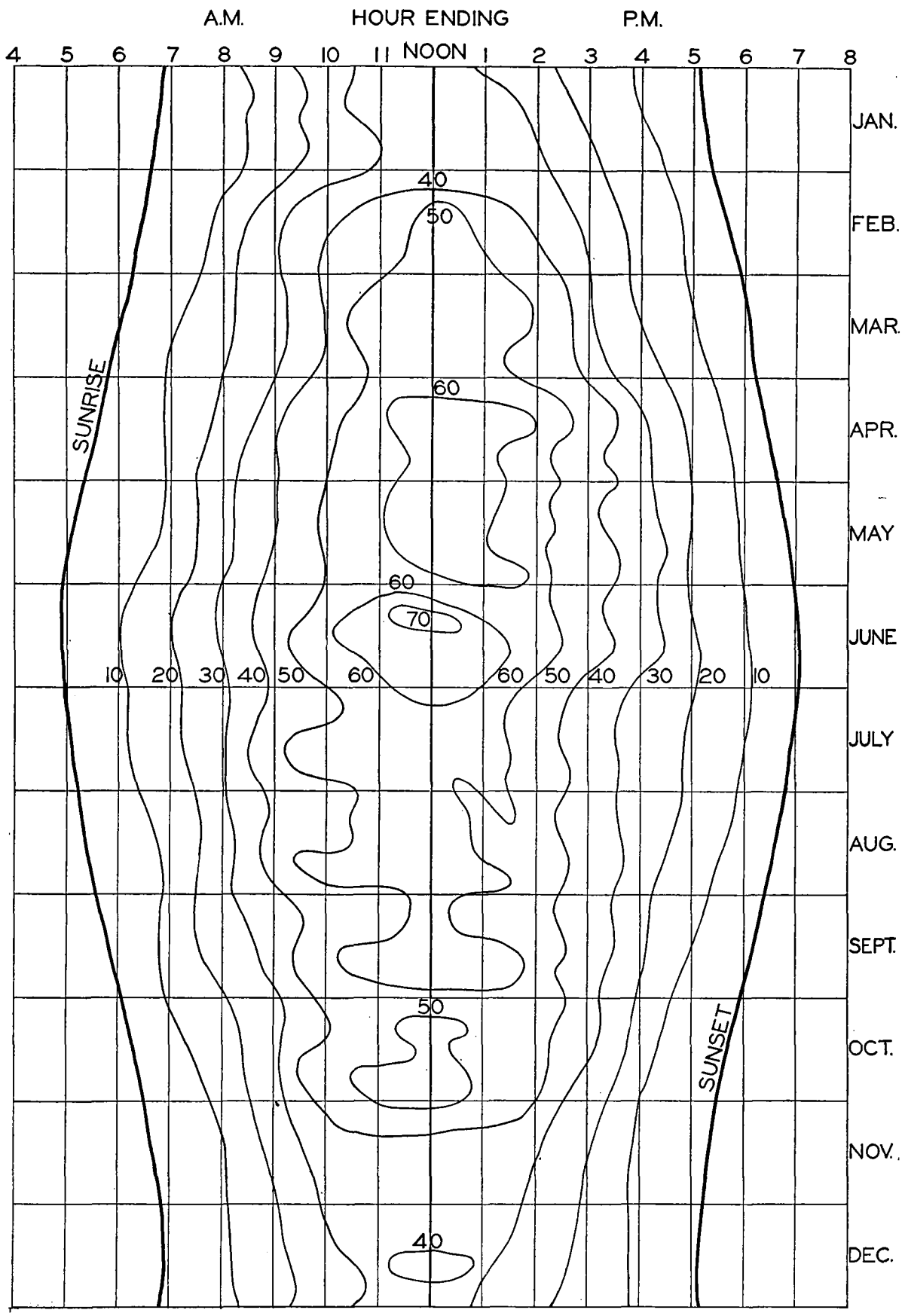

FIGURE 4.—Isopleth showing average hourly total solar and sky radiation on a horizontal surface, gram-calories per square centimeter, at New Orleans, throughout the year. See table 4.

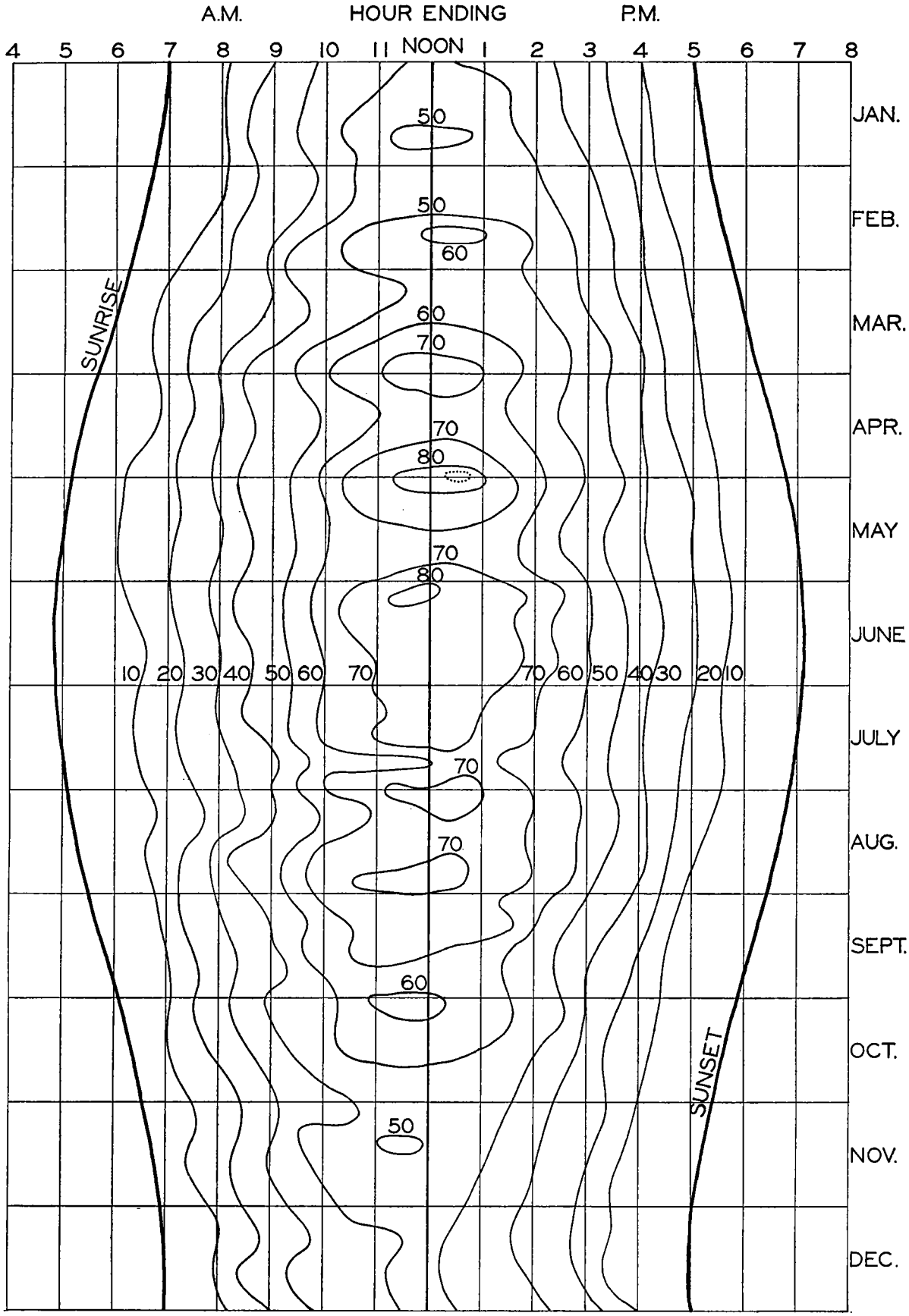

FIGURE 5.—Isopleth showing average hourly total solar and sky radiation on a horizontal surface, gram-calories per square centimeter, at La Jolla, throughout the year. See table 5.

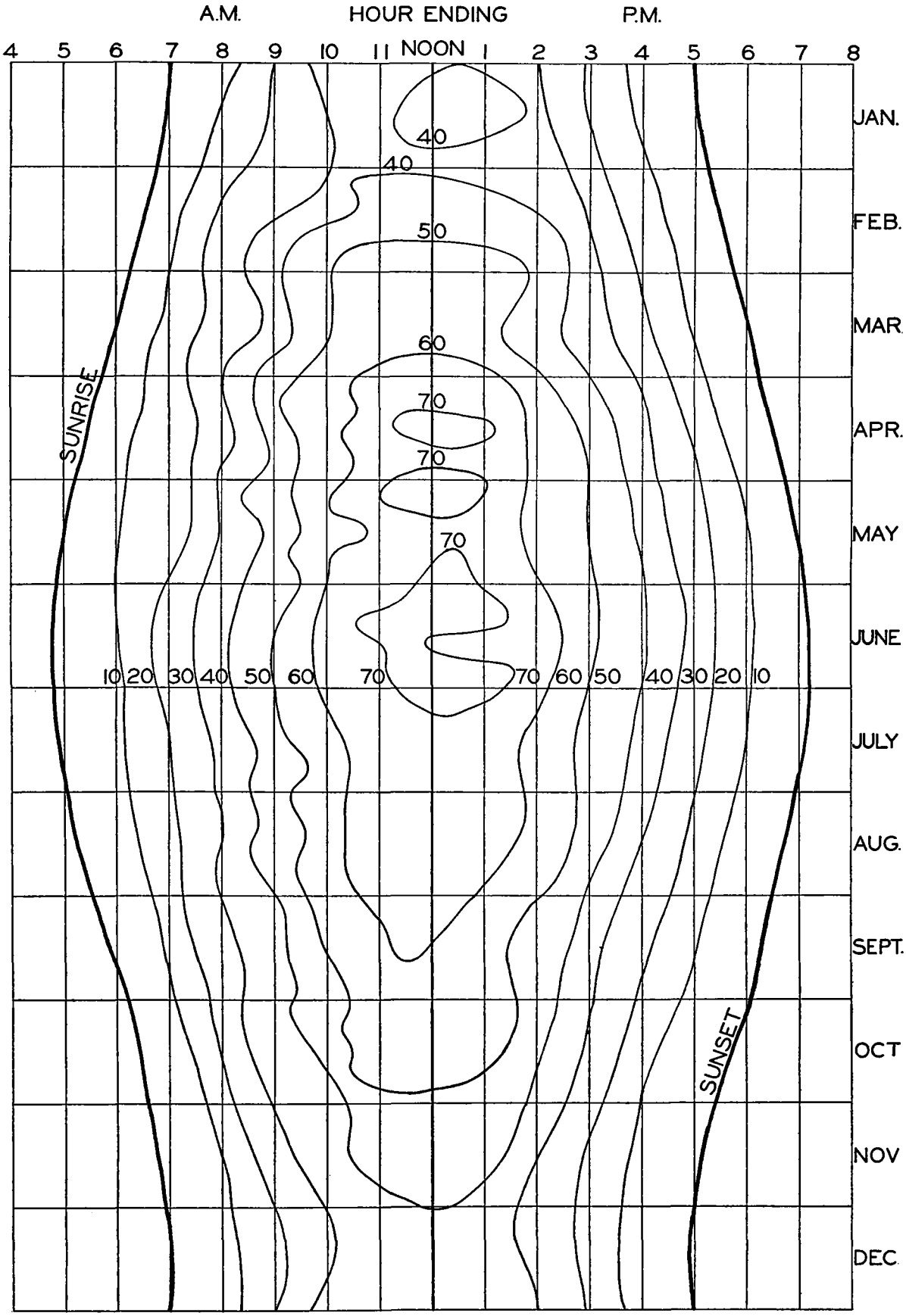

Figure 6.—Isopleth showing average hourly total solar and sky radiation on a horizontal surface, gram-calories per square centimeter, at Riverside, throughout the year. See table 6.

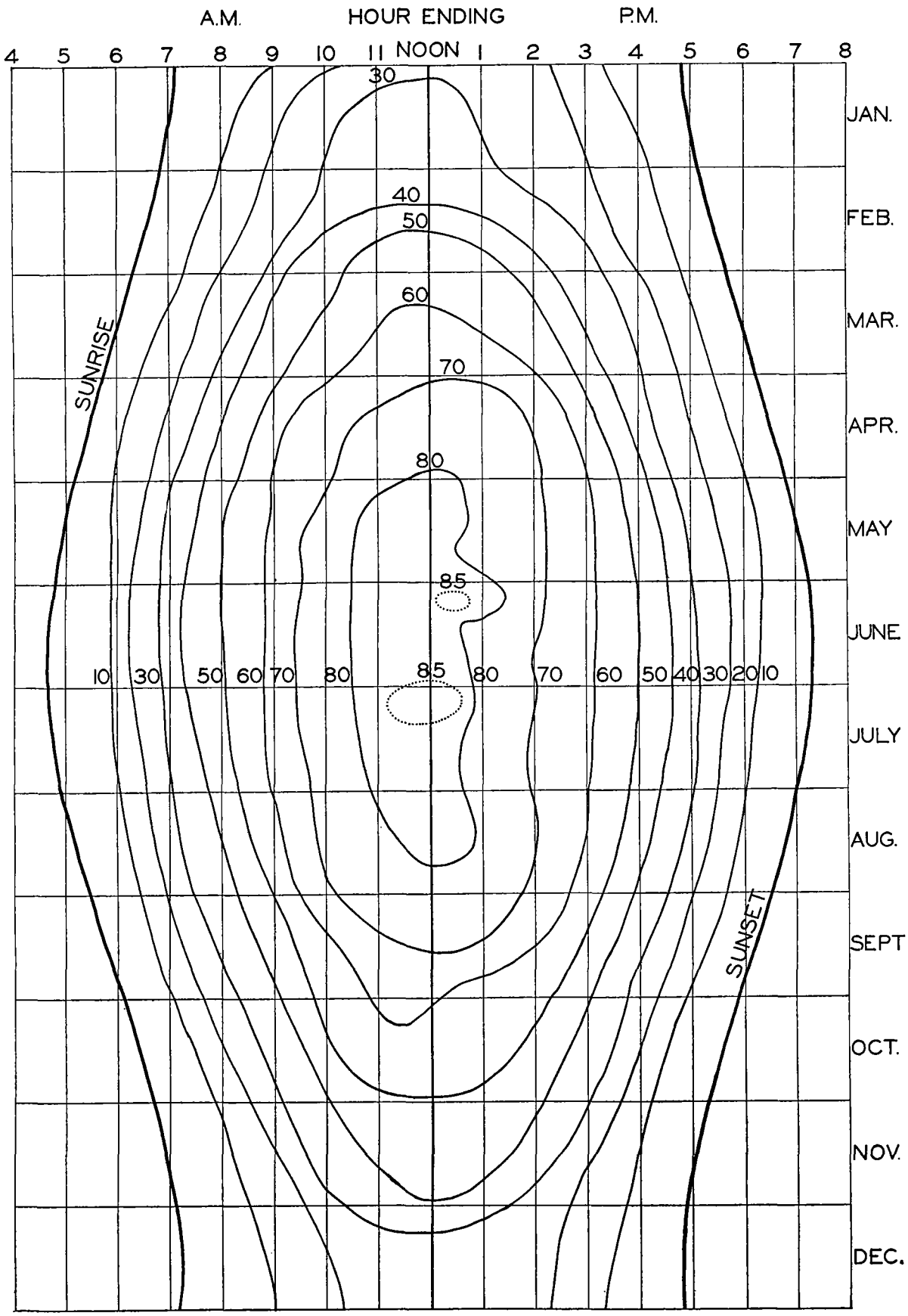

FIGURE 7.—Isopleth showing average hourly total solar and sky radiation on a horizontal surface, gram-calories per square centimeter, at Fresno, throughout the year. See table 7.

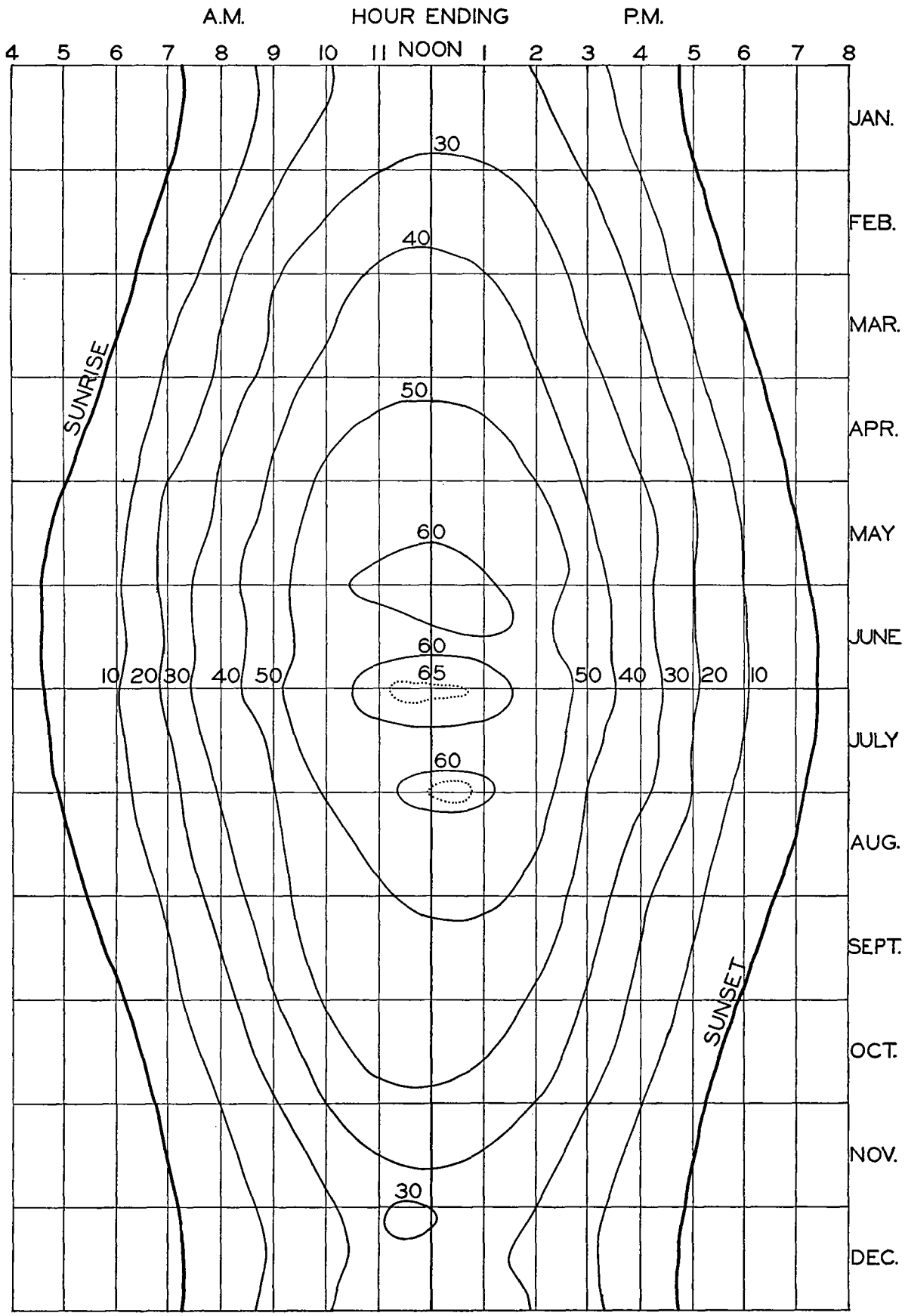

FIGURE 8.—Isopleth showing average hourly total solar and sky radiation on a horizontal surface, gram-calories per square centimeter, at Washington, throughout the year. See table 8.

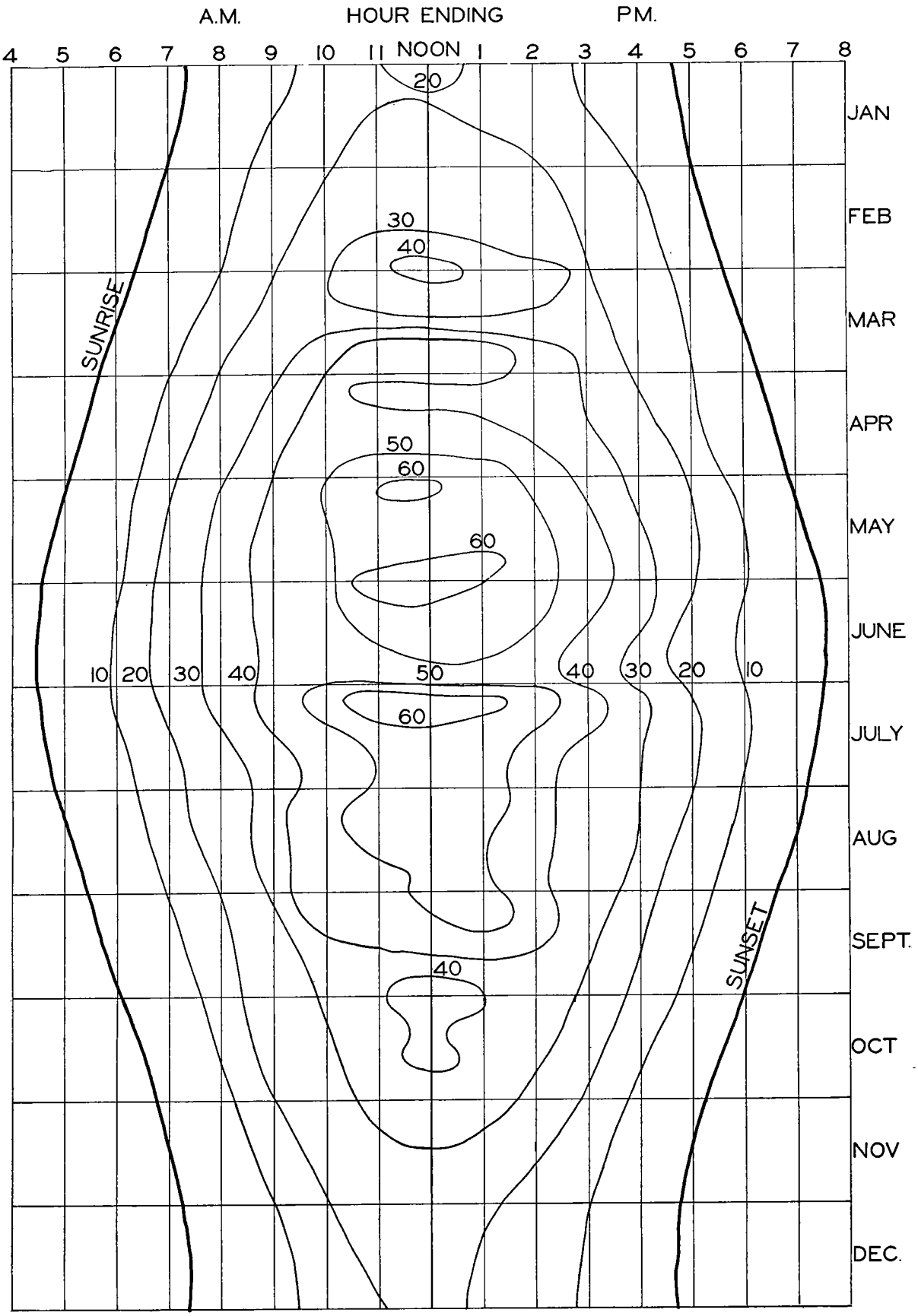

FIGURE 9.—Isopleth showing average hourly total solar and sky radiation on a horizontal surface, gram-calories per square centimeter, at New York, throughout the year. See table 9.

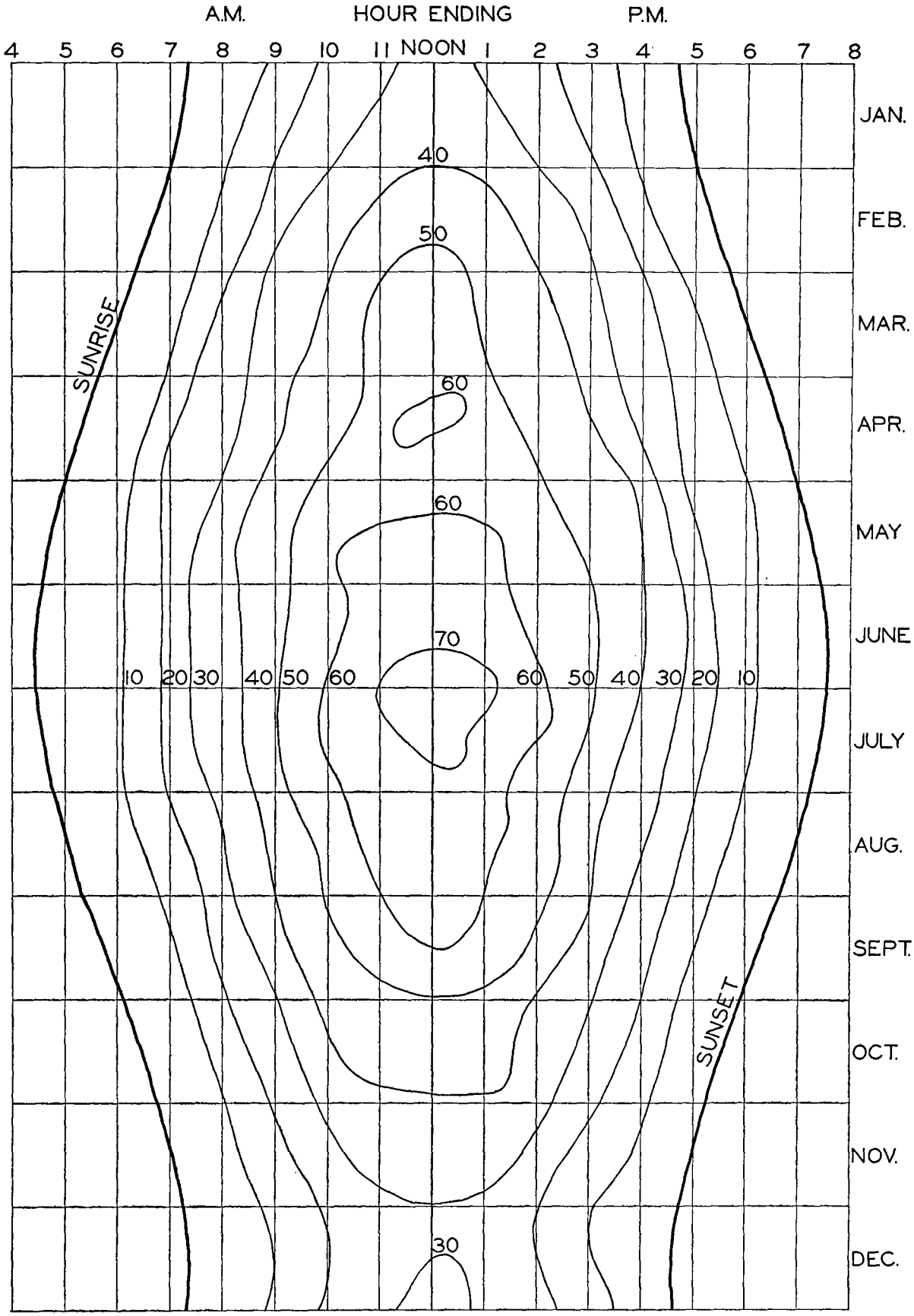

Figure 10.—Isopleth showing average hourly total solar and sky radiation on a horizontal surface, gram-calories per square centimeter, at Lincoln, throughout the year. See table 10.

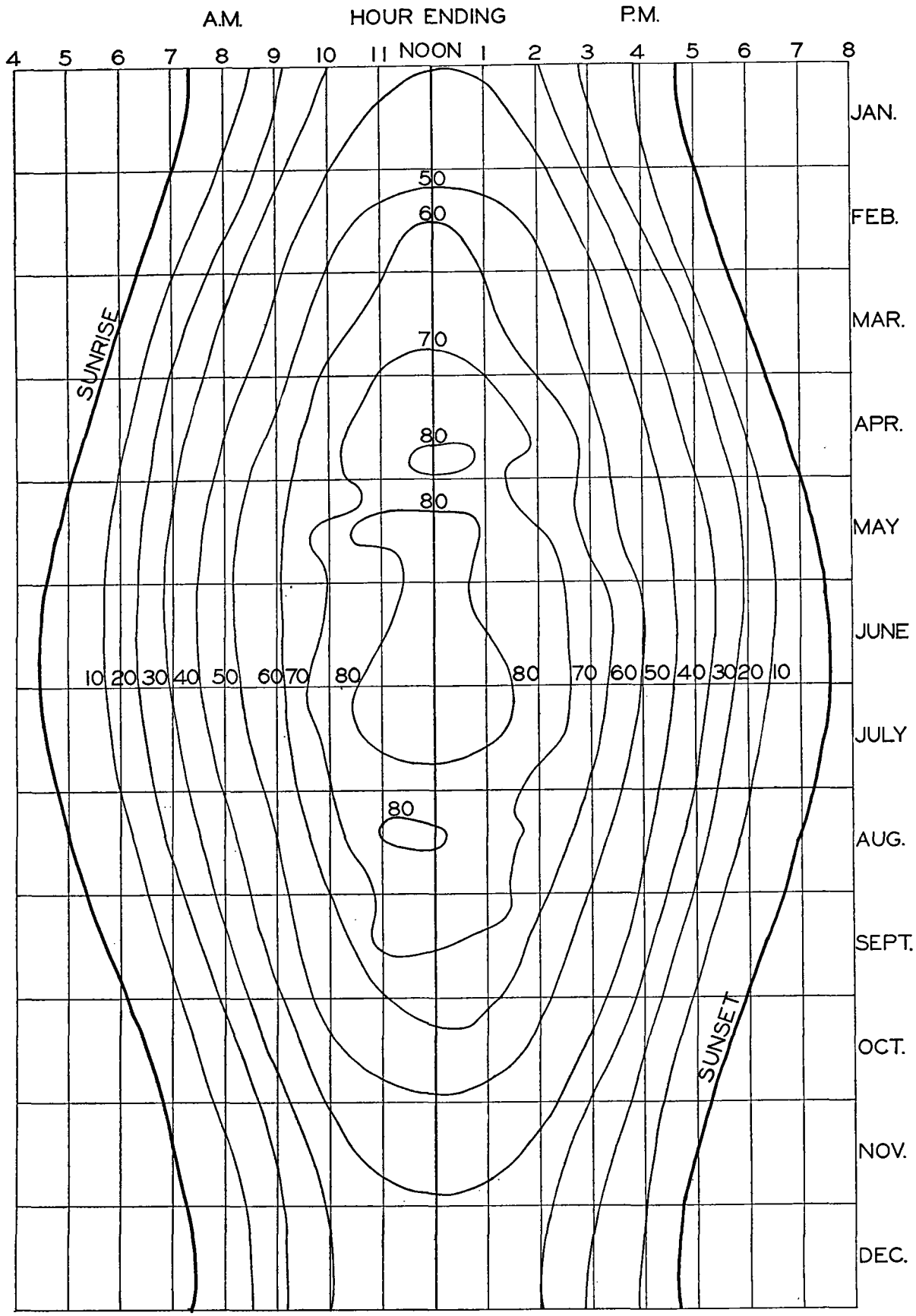

FIGURE 11.—Isopleth showing average maximum hourly total solar and sky radiation on a horizontal surface, gram-calories per square centimeter, at Lincoln, Nebr., throughout the year. See table 11.

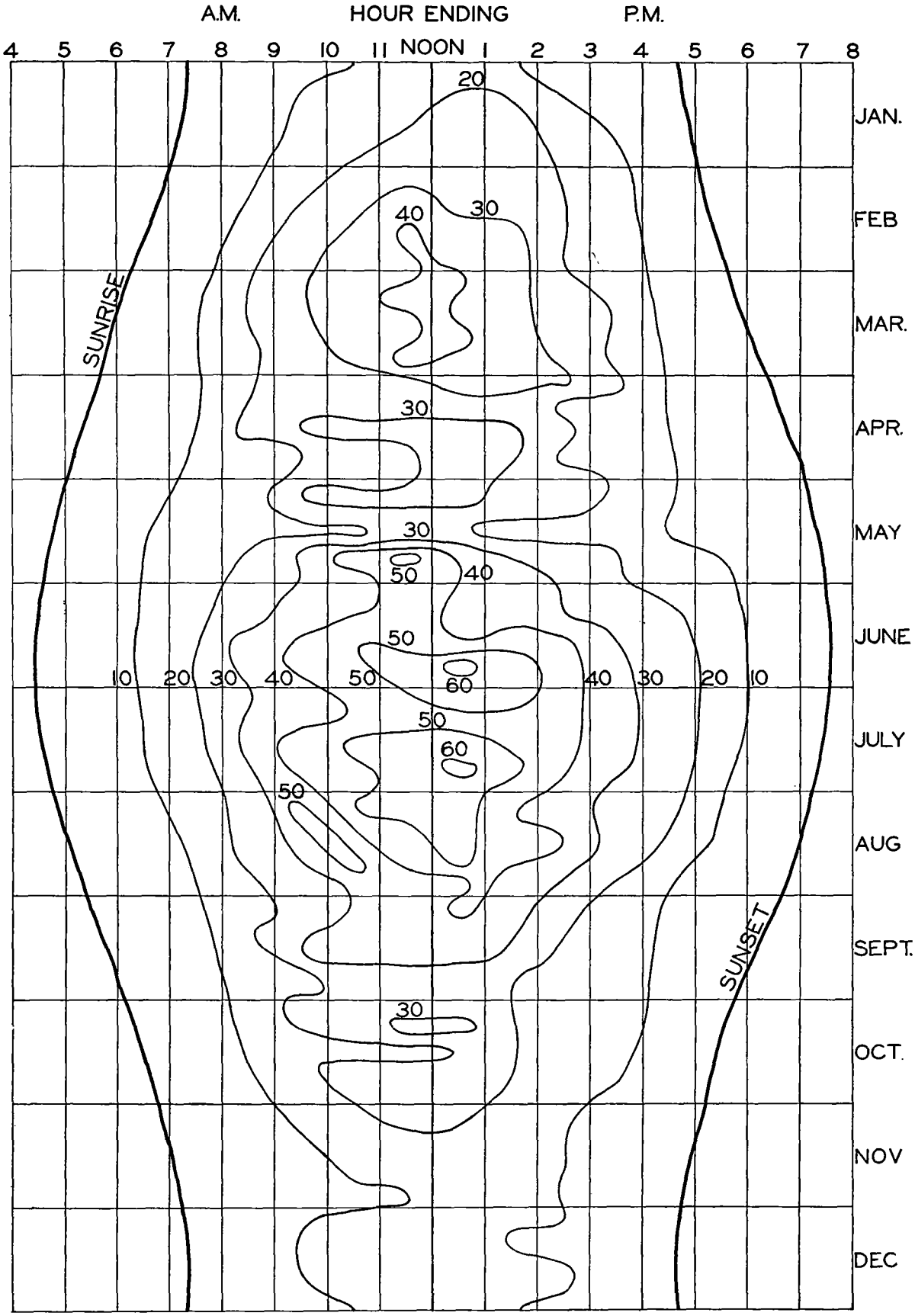

FIGURE 12.—Isopleth showing average minimum hourly total solar and sky radiation on a horizontal surface, gram-calories per square centimeter, at Lincoln, Nebr., throughout the year. See table 12.

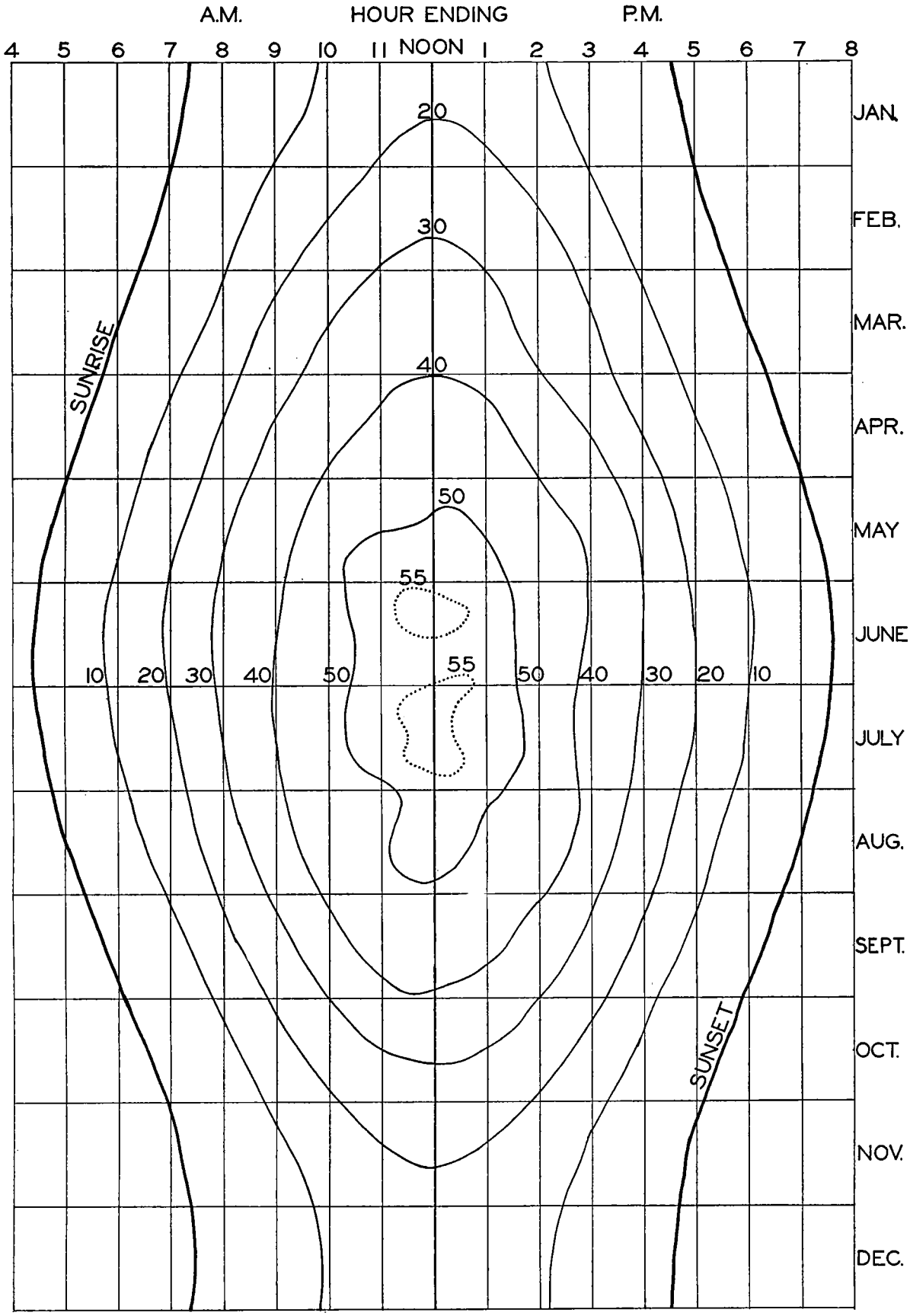

FIGURE 13.—Isopleth showing average hourly total solar and sky radiation on a horizontal surface, gram-calories per square centimeter, at Chicago, Ill., throughout the year. See table 13.

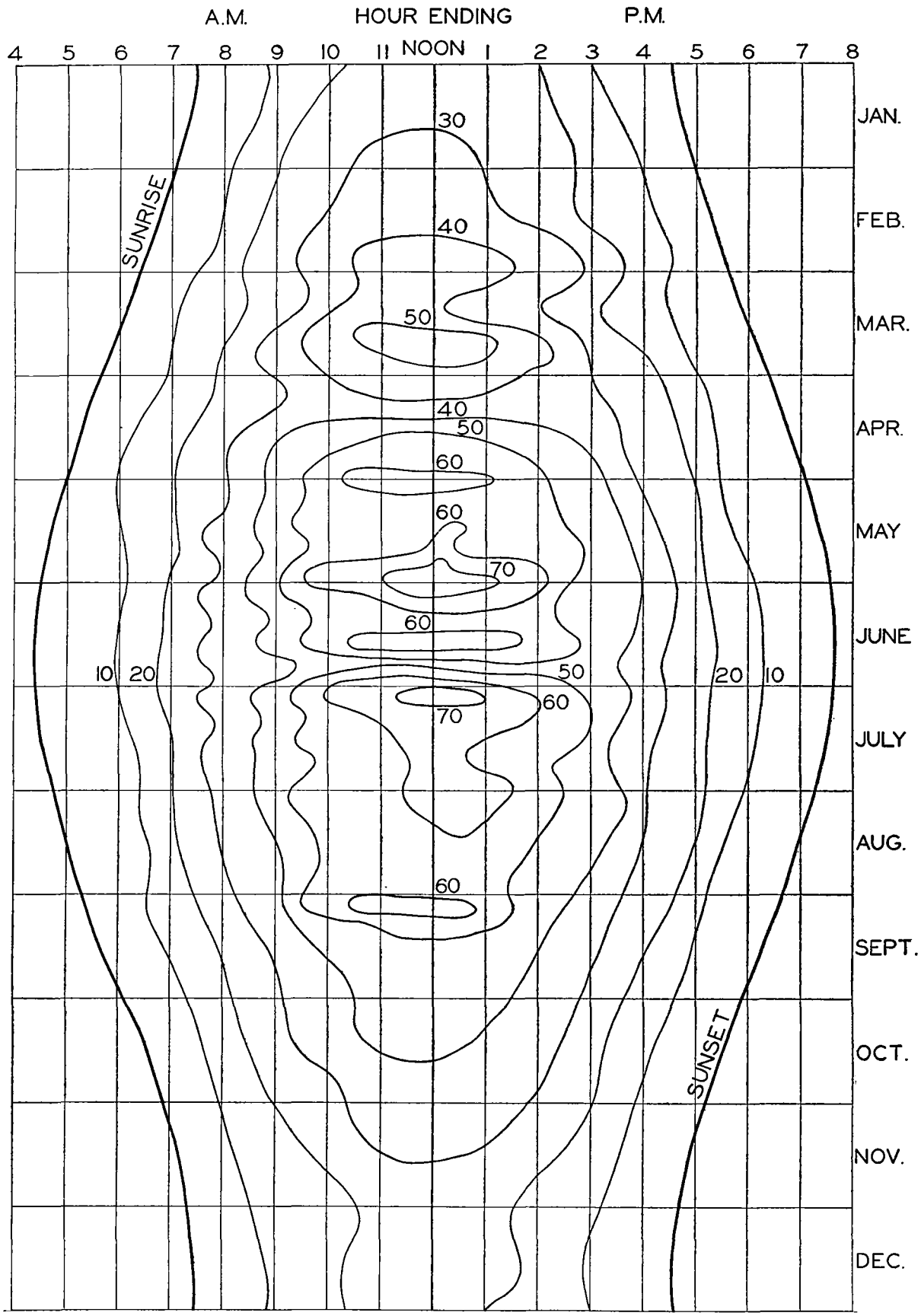

FIGURE 14.—Isopleth showing average hourly total solar and sky radiation on a horizontal surface, gram-calories per square centimeter, at Blue Hill, Mass., throughout the year. See table 14.

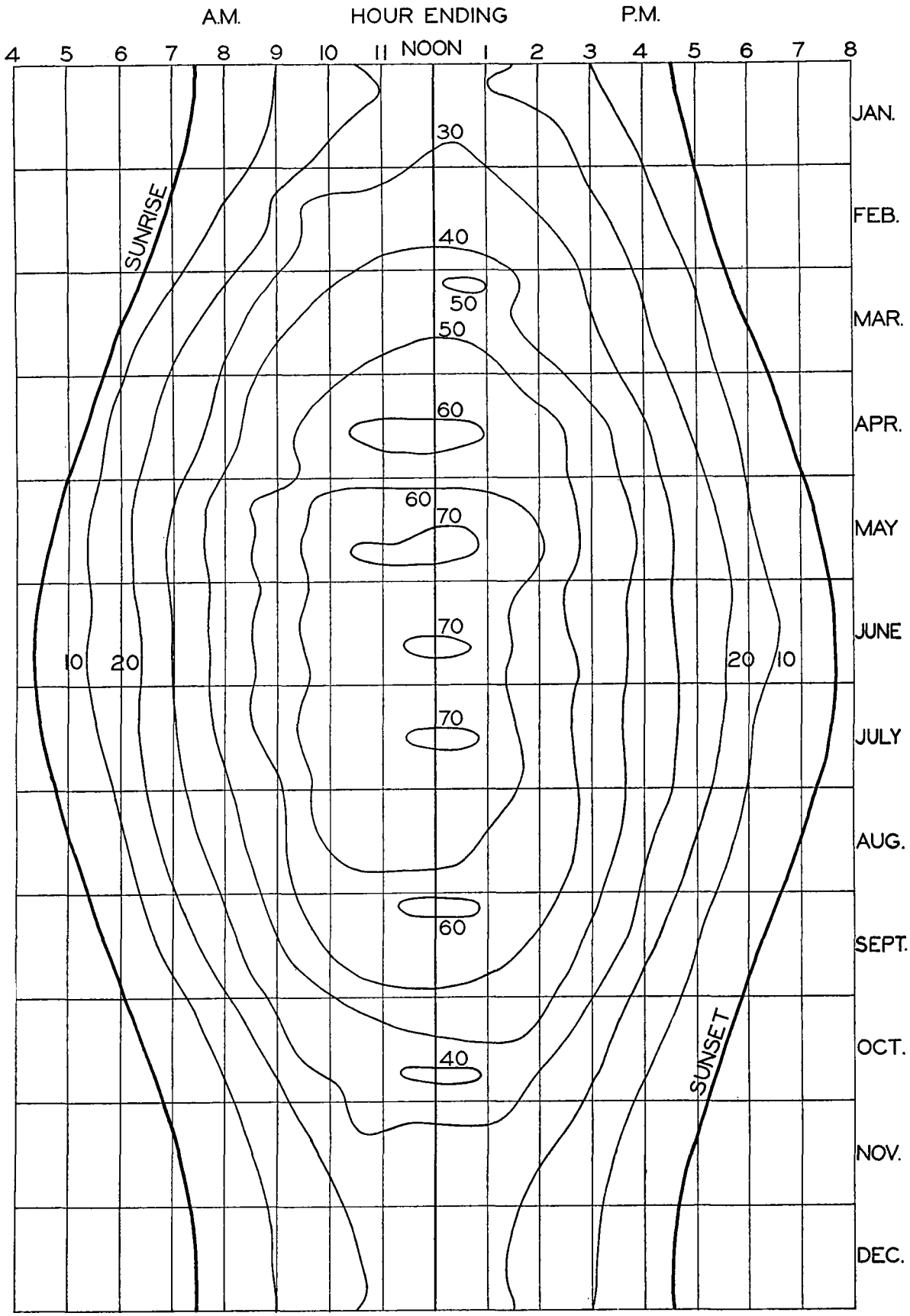

FIGURE 15.—Isopleth showing average hourly total solar and sky radiation on a horizontal surface, gram-calories per square centimeter, at Twin Falls, Idaho, throughout the year. See table 15.

322145—41——2

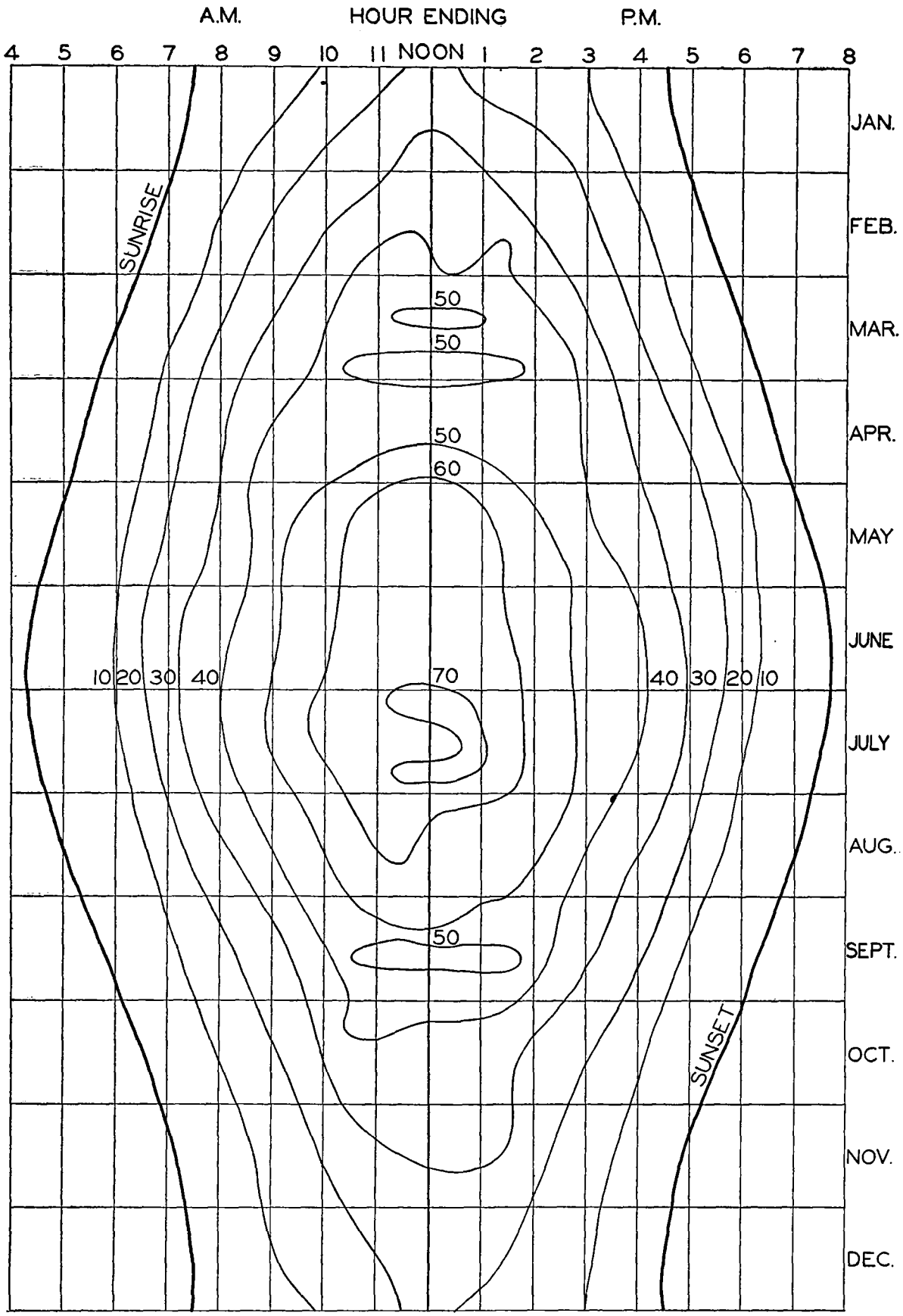

FIGURE 16.—Isopleth showing average hourly total solar and sky radiation on a horizontal surface, gram-calories per square centimeter, at Madison, Wis., throughout the year. See table 16.

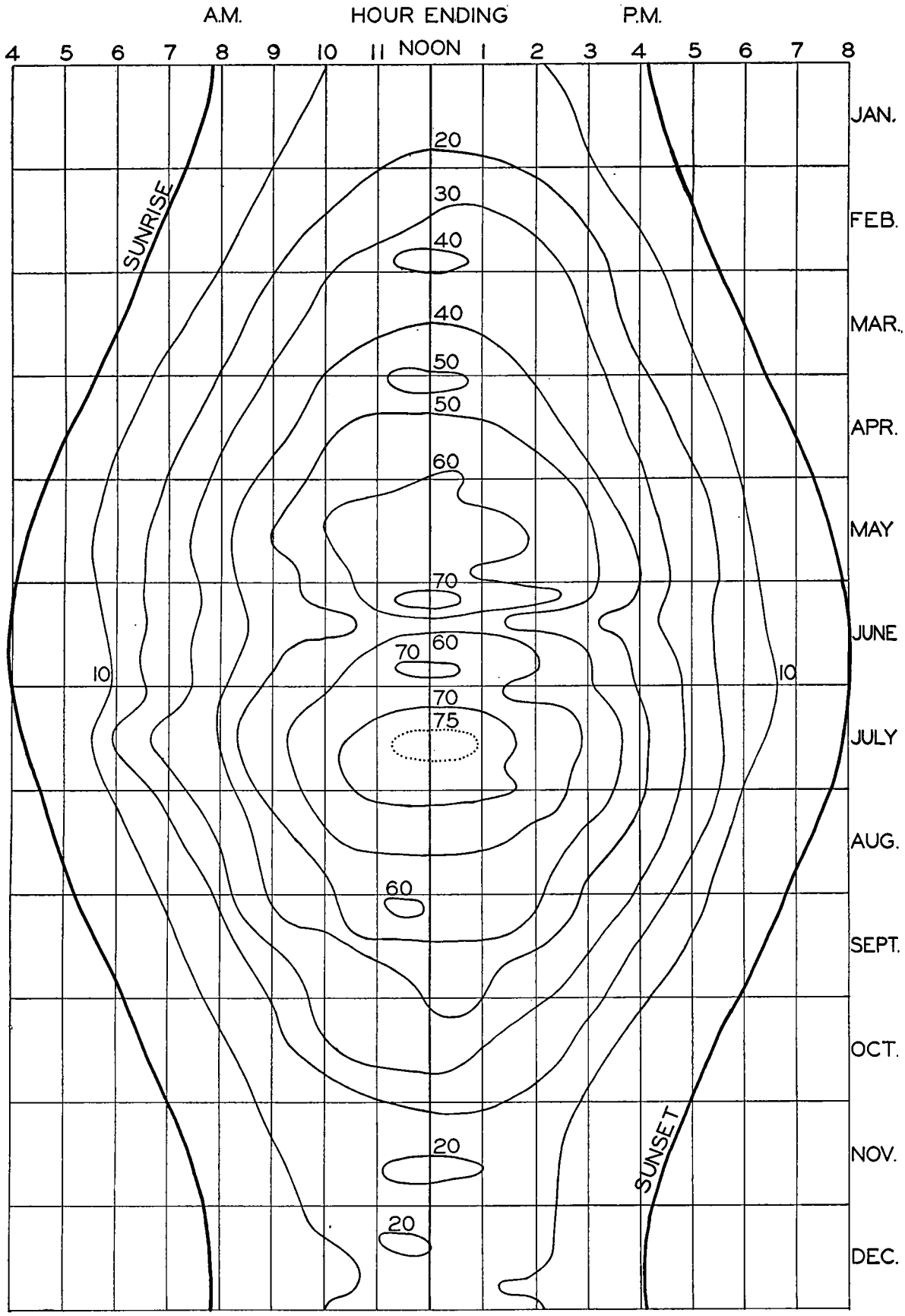

FIGURE 17.—Isopleth showing average hourly total solar and sky radiation on a horizontal surface, gram-calories per square centimeter, at Friday Harbor, Wash., throughout the year. See table 17.

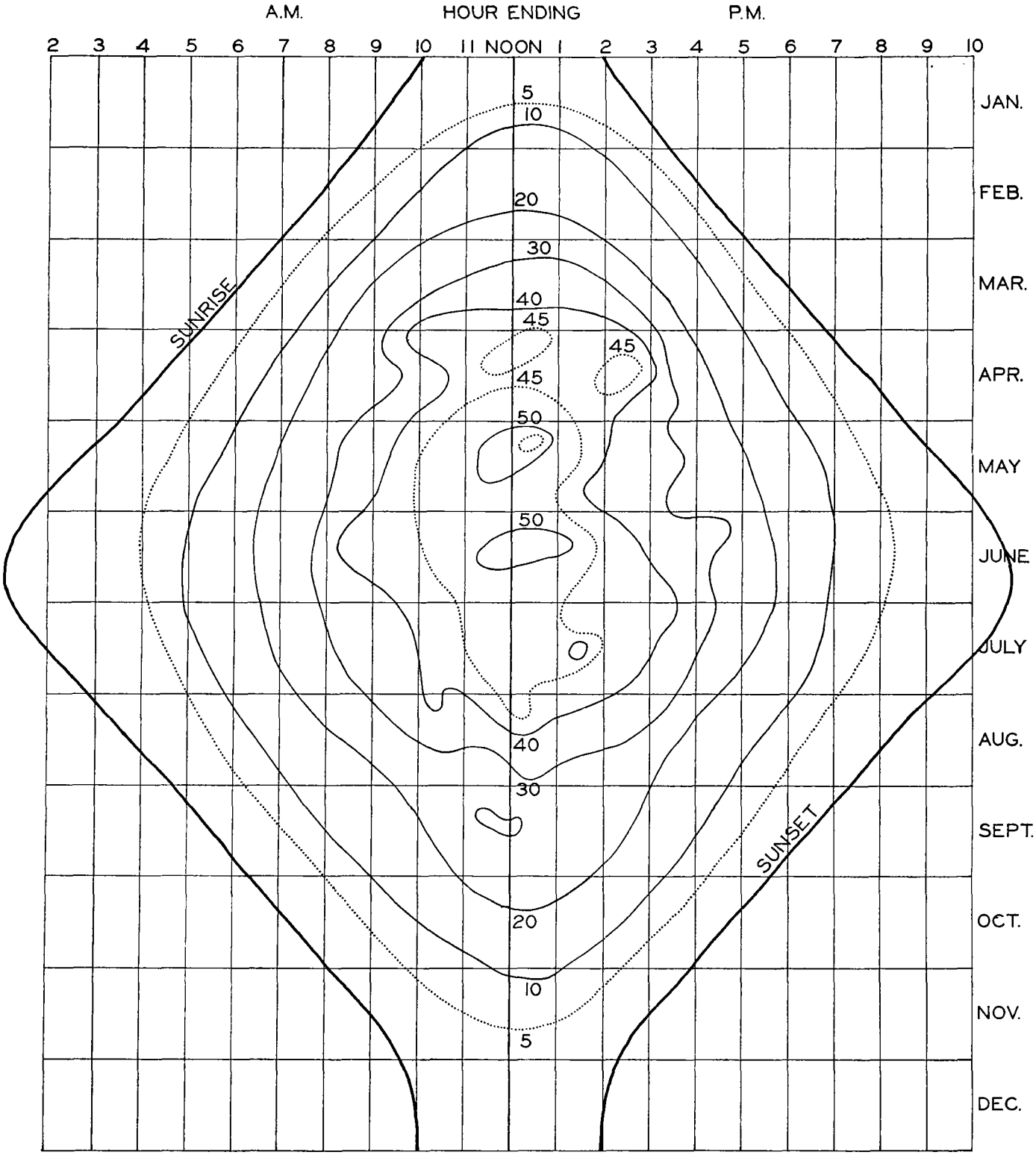

FIGURE 18.—Isopleth showing average hourly total solar and sky radiation on a horizontal surface, gram-calories per square centimeter, at Fairbanks, Alaska, throughout the year. See table 18.

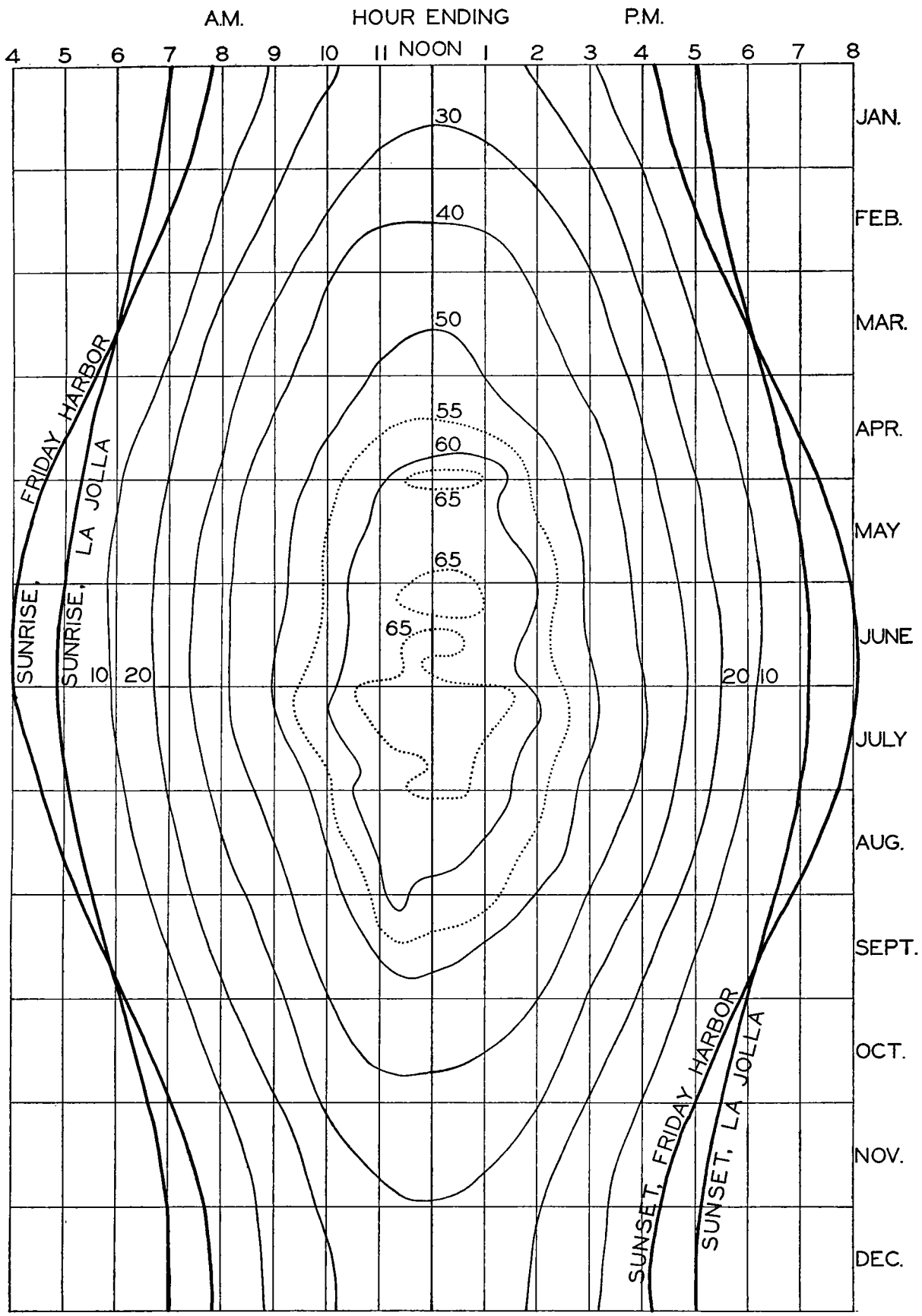

FIGURE 19.—Isopleth showing average hourly total solar and sky radiation on a horizontal surface, gram-calories per square centimeter, composite of 10 stations, throughout the year. See table 19.

TABLE 2.—*Mean hourly totals of solar and sky radiation on a horizontal surface, San Juan, P. R., 1936–38, inclusive (apparent solar time)*

Week beginning—	Gram-calories per square centimeter for hour ending—													
	A. M.							P. M.						
	6	7	8	9	10	11	Noon	1	2	3	4	5	6	7
Jan. 1	----	1	11	26	38	46	49	49	42	28	24	10	1	----
8	----	1	12	28	42	55	58	58	51	41	30	11	1	----
15	----	2	15	28	46	58	63	62	54	43	24	10	2	----
22	----	2	10	26	42	60	76	66	53	49	35	16	2	----
29	----	2	16	38	48	66	75	72	63	49	32	14	2	----
Feb. 5	----	2	12	32	47	58	68	68	67	54	40	20	4	----
12	----	2	15	34	53	66	70	71	70	58	44	24	6	----
19	----	3	12	27	45	60	72	72	66	56	40	24	7	----
26	----	8	27	43	62	84	90	92	83	64	44	22	6	----
Mar. 5	----	6	25	36	44	60	65	56	57	46	34	18	6	----
12	----	9	31	50	58	70	78	82	75	61	42	23	4	----
19	----	10	28	44	66	78	83	74	66	54	40	20	4	----
26	----	6	24	42	62	75	84	84	73	58	44	24	6	----
Apr. 2	----	8	22	40	60	70	75	76	68	58	44	21	8	----
9	----	8	24	43	65	72	71	72	70	68	48	30	10	----
16	1	14	33	55	74	84	82	88	81	66	50	30	10	1
23	1	14	30	55	74	86	92	89	81	66	38	25	10	1
30	1	10	28	43	58	68	73	68	64	43	27	14	6	1
May 7	2	14	31	50	66	72	73	62	58	47	38	23	9	1
14	2	14	32	51	63	72	71	74	68	56	33	23	7	1
21	4	11	30	46	64	70	72	68	55	47	36	20	9	2
28	2	13	30	46	61	73	79	76	67	57	44	25	11	2
June 4	3	16	36	52	65	76	82	73	62	63	42	26	11	2
11	2	13	27	44	57	70	74	70	58	44	33	20	9	1
18	2	12	27	44	59	66	71	64	65	50	36	20	8	1
25	3	15	33	49	64	73	81	80	67	56	42	26	10	1
July 2	2	16	34	37	64	77	79	76	67	57	40	23	10	1
9	2	14	32	48	65	78	77	75	67	53	40	24	10	2
16	1	12	30	50	69	80	87	82	68	57	43	27	11	1
23	1	14	30	49	68	77	80	78	74	64	46	28	11	1
30	1	13	29	49	64	74	78	72	65	53	44	23	8	1
Aug. 6	2	14	33	52	65	76	78	70	67	51	37	22	7	1
13	1	12	28	47	62	75	80	73	63	52	41	21	7	1
20	1	11	29	44	62	68	69	68	58	44	30	18	5	1
27	1	12	29	53	68	84	82	78	71	57	37	22	7	1
Sept. 3	----	11	30	48	62	77	73	70	64	51	34	17	5	----
10	----	10	32	51	67	81	88	83	77	49	34	21	6	----
17	----	10	31	50	61	73	69	65	58	49	33	18	5	----
24	----	9	26	46	63	69	71	69	64	53	34	18	4	----
Oct. 1	----	6	24	43	59	68	72	63	53	44	31	16	3	----
8	----	6	23	39	61	71	77	76	66	52	36	17	4	----
15	----	6	23	44	60	75	80	72	61	46	29	12	2	----
22	----	5	22	39	51	62	73	72	67	50	29	12	2	----
29	----	3	21	40	52	57	60	63	62	46	27	12	1	----
Nov. 5	----	4	18	34	44	58	63	60	51	38	23	10	1	----
12	----	3	16	33	50	62	70	64	59	49	28	12	2	----
19	----	2	16	34	50	61	69	66	56	49	29	10	1	----
26	----	2	13	31	47	57	65	67	60	46	33	14	2	----
Dec. 3	----	2	14	32	48	58	67	74	60	37	29	12	1	----
10	----	2	14	33	50	58	65	64	62	49	27	12	1	----
17	----	2	11	33	48	55	65	64	57	45	26	11	3	----
24*	----	2	13	25	40	54	58	56	53	41	26	9	1	----
Means	0.7	8	24	41	57	69	74	71	64	51	36	19	6	0.5

*8-day means.

TABLE 3.—*Mean hourly totals of solar and sky radiation received on a horizontal surface, Miami, Fla., 1936–38, inclusive (apparent solar time)*

Week beginning—	Gram-calories per square centimeter for hour ending—													
	A. M.							P. M.						
	6	7	8	9	10	11	Noon	1	2	3	4	5	6	7
Jan. 1	----	----	6	16	30	39	48	47	44	35	25	13	4	----
8	----	----	6	15	28	38	44	47	42	34	24	13	4	----
15	----	----	6	15	29	40	46	48	44	36	27	13	6	----
22	----	----	6	15	30	40	47	48	43	39	28	14	6	----
29	----	----	7	16	30	43	50	51	43	40	29	16	7	----
Feb. 5	----	----	7	15	27	39	48	51	45	37	28	16	8	----
12	----	----	8	16	28	38	44	46	44	31	27	15	8	----
19	----	----	8	18	30	42	44	48	47	39	28	16	8	----
26	----	1	8	21	37	48	55	56	52	48	34	19	8	1
Mar. 5	----	1	9	22	36	48	52	56	50	44	32	20	9	1
12	----	1	11	24	42	49	57	57	54	47	35	23	11	1
19	----	1	12	25	42	50	60	64	60	52	42	26	11	1
26	----	1	12	28	44	54	62	63	61	50	38	24	12	1
Apr. 2	----	4	12	28	44	51	59	63	61	51	40	25	12	3
9	----	4	15	31	52	57	64	64	61	52	38	23	12	4
16	----	5	16	32	46	58	65	65	60	52	42	30	13	5
23	----	6	18	35	49	58	63	64	57	47	40	24	12	6
30	----	7	19	33	48	59	64	64	56	49	42	28	16	6
May 7	----	8	20	36	49	59	62	61	60	48	38	25	16	6
14	----	8	18	30	44	54	62	62	60	52	42	39	15	6
21	----	8	21	36	49	57	62	64	55	44	36	25	13	6
28	----	9	21	36	46	53	51	52	46	42	39	24	13	5
June 4	1	8	21	37	50	56	63	64	61	52	44	30	17	7
11	1	8	15	30	40	48	56	53	52	44	33	27	14	8
18	1	9	20	33	42	52	56	54	47	38	27	21	12	8
25	1	8	20	35	44	50	54	48	39	32	27	18	12	8
July 2	1	9	18	29	40	50	54	53	46	41	32	23	13	8
9	1	10	20	34	46	54	60	54	51	46	37	25	14	8
16	1	9	22	36	46	53	62	63	60	53	39	28	16	8
23	1	8	18	32	46	52	62	64	60	49	36	28	16	8
30	----	9	18	31	44	50	54	60	51	44	32	23	13	7
Aug. 6	----	7	17	30	40	45	52	56	53	46	37	27	16	7
13	----	7	17	32	49	54	61	60	52	47	38	24	13	6
20	----	7	15	27	42	51	53	53	50	42	32	20	11	5
27	----	6	16	26	37	55	60	56	46	35	26	15	9	3
Sept. 3	----	6	16	32	43	51	57	59	51	39	31	18	9	4
10	----	5	18	27	43	46	51	53	50	39	31	19	9	3
17	----	5	16	31	46	58	60	56	48	42	39	17	7	2
24	----	5	13	24	35	42	43	43	38	33	23	14	7	2
Oct. 1	----	3	13	26	40	50	54	57	53	43	29	16	8	----
8	----	4	12	27	38	46	51	52	46	37	26	13	5	----
15	----	4	12	28	42	50	56	55	48	37	26	13	4	----
22	----	4	13	28	42	50	55	56	48	36	25	12	4	----
29	----	3	10	23	36	44	49	50	41	33	22	10	3	----
Nov. 5	----	2	10	22	34	44	50	49	43	32	22	10	2	----
12	----	2	9	18	31	40	46	46	40	29	20	9	2	----
19	----	2	9	22	34	43	45	48	39	31	20	8	2	----
26	----	1	8	20	30	41	45	48	42	33	21	10	2	----
Dec. 3	----	----	8	20	32	44	48	50	44	33	22	10	2	----
10	----	----	8	16	27	38	44	46	43	32	22	10	2	----
17	----	----	7	16	30	42	46	46	43	33	23	11	2	----
24*	----	----	6	15	28	38	44	47	40	33	23	11	3	----
Means	0.2	4	13	26	39	48	54	55	49	41	31	19	9	3

* 8-day means.

TABLE 4.—*Mean hourly totals of solar and sky radiation on a horizontal surface, New Orleans, La., 1936–39, inclusive (apparent solar time)*

Week beginning—	Gram-calories per square centimeter for hour ending—													
	A. M.							P. M.						
	6	7	8	9	10	11	Noon	1	2	3	4	5	6	7
Jan. 1	----	----	4	12	21	30	34	32	25	19	12	5	1	----
8	----	----	2	9	18	24	33	34	32	26	16	7	4	----
15	----	----	3	10	21	32	37	38	34	28	16	6	1	----
22	----	----	3	11	22	28	33	36	34	25	15	7	2	----
29	----	----	2	9	20	29	34	33	33	28	19	8	2	----
Feb. 5	----	----	3	11	21	31	38	37	36	28	19	10	3	----
12	----	1	7	18	32	45	50	52	48	39	34	15	4	----
19	----	1	8	18	32	44	47	50	47	40	28	15	5	----
26	----	2	8	20	32	42	51	52	49	39	28	16	5	----
Mar. 5	----	1	8	20	34	46	53	56	54	48	30	15	6	----
12	----	2	12	25	38	52	57	58	54	46	39	17	6	----
19	----	2	10	24	38	49	55	58	52	41	28	16	5	----
26	----	2	12	24	37	47	50	55	48	40	28	14	5	----
Apr. 2	----	2	11	25	37	49	57	58	54	46	36	21	9	2
9	----	4	18	34	49	59	65	64	62	53	40	24	10	2
16	1	4	18	35	48	58	66	68	67	54	40	25	10	2
23	1	3	13	27	41	51	52	67	56	47	37	24	12	2
30	1	5	18	34	46	56	63	64	60	54	50	28	12	3
May 7	2	7	20	36	48	61	64	62	58	48	38	25	11	3
14	1	6	23	34	47	57	62	55	56	50	38	25	12	4
21	1	6	19	33	44	56	61	63	53	47	42	31	16	4
28	2	8	18	37	49	57	56	61	61	53	42	26	12	3
June 4	3	12	26	39	48	58	62	57	58	48	36	22	11	5
11	2	12	28	43	56	65	71	70	59	48	37	28	15	6
18	2	12	27	40	52	62	63	62	61	56	47	34	17	7
25	3	13	24	38	48	54	65	62	57	49	38	29	16	6
July 2	4	12	25	36	48	50	60	61	56	47	31	21	13	4
9	2	10	23	36	38	58	56	52	45	35	30	24	12	5
16	2	10	23	39	52	59	66	62	46	45	28	22	14	5
23	2	12	28	44	52	53	54	56	50	36	30	22	13	6
30	2	10	25	38	42	47	52	48	47	42	29	20	10	4
Aug. 6	1	6	19	35	45	52	55	59	52	45	32	24	13	5
13	1	6	19	31	42	49	53	51	40	38	30	22	14	5
20	2	8	23	38	52	58	57	52	44	42	32	20	10	4
27	1	6	18	33	47	56	54	55	53	44	31	20	10	3
Sept. 3	----	3	16	33	41	47	47	45	39	35	26	15	7	2
10	----	3	13	27	39	45	52	47	42	35	28	14	7	2
17	----	7	20	33	43	52	57	55	55	44	31	17	6	2
24	----	3	14	29	43	52	55	55	51	38	23	15	5	1
Oct. 1	----	1	9	21	34	45	48	48	48	40	28	15	5	----
8	----	2	10	25	38	48	50	51	44	36	25	11	3	----
15	----	2	10	24	36	43	49	49	42	35	23	10	2	----
22	----	2	12	29	43	53	56	56	50	38	21	7	2	----
29	----	1	7	21	36	47	53	53	49	39	25	12	3	----
Nov. 5	----	----	8	19	34	45	48	47	41	30	16	5	1	----
12	----	----	6	16	27	32	33	36	31	23	12	4	----	----
19	----	----	6	19	30	39	44	44	36	27	12	4	----	----
26	----	----	4	13	24	32	36	36	31	23	12	3	----	----
Dec. 3	----	----	4	12	23	30	37	36	31	21	12	2	----	----
10	----	----	5	14	24	33	38	37	33	24	13	3	----	----
17	----	----	3	11	22	33	44	44	33	24	14	4	----	----
24*	----	----	2	8	17	26	31	31	28	20	12	4	----	----
Means	1	4	13	26	38	47	51	51	47	39	28	16	7	2

*8-day means.

TABLE 5.—*Mean hourly totals of solar and sky radiation received on a horizontal surface. La Jolla, Calif., 1936–39, inclusive (apparent solar time)*

Week beginning—	Gram-calories per square centimeter for hour ending—													
	A. M.							P. M.						
	6	7	8	9	10	11	Noon	1	2	3	4	5	6	7
Jan. 1	----	----	3	14	27	34	40	40	39	28	17	4	----	----
8	----	----	4	16	30	40	45	45	40	30	16	4	----	----
15	----	----	5	17	27	38	42	48	36	28	16	4	----	----
22	----	----	6	20	34	45	51	50	44	32	20	6	----	----
29	----	----	5	16	28	38	44	44	41	30	20	8	----	----
Feb. 5	----	----	6	15	32	40	47	48	43	30	20	8	----	----
12	----	----	6	17	29	38	44	46	42	32	21	9	----	----
19	----	1	8	23	38	50	59	60	56	48	30	14	2	----
26	----	2	13	29	41	52	59	59	52	45	30	14	3	----
Mar. 5	----	2	13	26	41	48	50	54	53	43	29	14	2	----
12	----	2	11	23	32	44	58	58	54	43	30	16	4	----
19	----	3	12	26	40	53	61	63	58	50	34	19	6	----
26	----	8	23	39	50	62	71	70	64	52	45	19	4	----
Apr. 2	1	9	24	41	56	64	73	76	66	51	36	21	6	----
9	1	7	16	29	43	54	63	66	59	50	36	19	5	----
16	1	8	19	31	43	56	65	67	61	50	45	20	7	1
23	2	9	23	34	44	66	73	77	67	53	36	20	7	1
30	3	14	25	44	58	74	82	85	71	58	45	26	14	2
May 7	3	12	23	40	54	72	78	76	71	58	43	27	12	2
14	4	12	21	37	54	66	70	70	63	50	39	22	8	1
21	3	11	22	35	48	58	64	64	61	49	38	24	10	2
28	3	10	22	38	56	67	70	71	62	54	38	24	10	2
June 4	4	12	26	41	58	73	80	79	74	62	46	30	19	3
11	4	11	23	47	58	72	76	76	70	59	44	26	12	2
18	3	9	20	38	51	68	79	78	71	58	44	39	13	3
25	3	9	21	39	55	66	75	78	71	60	44	28	12	2
July 2	2	9	20	38	54	67	74	75	68	57	42	26	12	2
9	3	10	26	42	57	68	71	73	66	56	40	23	9	1
16	3	10	22	39	57	69	75	74	64	57	42	26	11	2
23	2	8	21	35	47	58	56	62	59	50	36	21	10	3
30	2	10	20	35	52	65	72	72	65	54	40	26	11	2
Aug. 6	1	5	14	29	45	56	68	72	68	57	47	25	10	1
13	1	5	14	29	45	60	66	68	63	53	48	22	8	1
20	2	10	24	41	58	66	69	71	64	53	38	21	6	1
27	2.	8	20	42	59	70	71	71	65	54	35	19	5	2
Sept. 3	1	8	21	38	54	63	68	66	58	48	34	18	5	2
10	1	8	22	38	48	59	65	65	62	47	32	15	2	----
17	1	8	21	34	51	60	62	57	50	37	22	9	1	----
24	1	7	17	30	40	51	54	53	46	36	22	8	1	----
Oct. 1	----	6	18	38	48	58	62	59	52	40	25	10	1	----
8	----	5	20	36	48	56	59	56	50	46	22	7	1	----
15	----	5	17	30	42	52	56	54	46	31	15	4	----	----
22	----	2	14	26	34	42	46	45	48	30	16	4	----	----
29	----	2	12	24	35	47	52	50	43	30	17	4	----	----
Nov. 5	----	2	8	19	32	38	42	42	38	29	20	6	----	----
12	----	2	14	28	41	47	50	47	38	26	12	1	----	----
19	----	1	12	25	38	44	48	44	36	25	10	2	----	----
26	----	1	10	23	34	43	45	43	34	22	9	1	----	----
Dec. 3	----	1	8	20	31	41	45	41	34	26	11	2	----	----
10	----	----	6	17	27	33	38	36	30	21	10	1	----	----
17	----	----	8	20	31	38	42	38	33	22	9	1	----	----
24*	----	----	7	20	32	38	43	39	34	21	10	2	----	----
Means	1	5	16	30	44	54	60	60	54	43	29	15	5	1

*8-day means.

TABLE 6.—*Mean hourly totals of solar and sky radiation on a horizontal surface. Riverside, Calif., 1936–39, inclusive (apparent solar time)*

Week beginning—	Gram-calories per square centimeter for hour ending—													
	A. M.							P. M.						
	6	7	8	9	10	11	Noon	1	2	3	4	5	6	7
Jan. 1	----	----	2	12	28	36	38	40	35	25	14	3	----	----
8	----	----	2	14	27	36	40	40	39	26	15	3	----	----
15	----	----	3	15	27	36	40	41	37	28	15	4	----	----
22	----	----	6	19	33	40	44	42	36	26	15	4	----	----
29	----	----	6	15	27	34	35	36	37	27	16	5	----	----
Feb. 5	----	----	8	22	28	42	46	45	38	30	19	6	----	----
12	----	----	8	20	31	39	42	44	41	31	19	7	----	----
19	----	1	12	27	39	48	48	48	44	36	22	9	1	----
26	----	2	15	30	41	53	58	58	52	40	27	12	2	----
Mar. 5	----	2	15	30	44	54	63	60	53	41	28	12	2	----
12	----	4	16	27	43	52	59	58	52	43	30	14	2	----
19	----	4	16	27	38	48	54	52	47	38	26	14	4	----
26	----	6	22	34	47	55	60	61	53	44	30	16	5	----
Apr. 2	----	9	25	38	52	62	68	66	62	50	35	21	7	----
9	----	8	22	35	50	58	70	68	63	45	36	21	7	----
16	1	10	22	36	50	63	74	75	68	57	41	24	9	1
23	1	9	20	30	46	58	64	64	62	54	40	25	10	1
30	2	11	24	35	50	64	74	74	68	57	42	28	12	2
May 7	2	13	26	42	54	66	74	72	67	57	44	29	12	2
14	2	9	19	33	45	55	63	66	62	53	41	26	12	2
21	3	12	25	39	55	64	68	70	64	56	41	28	14	3
28	2	11	22	36	49	60	64	71	65	58	45	30	14	3
June 4	2	13	26	40	53	66	72	74	66	59	47	32	16	4
11	3	15	29	45	58	70	76	75	70	61	49	33	16	4
18	3	20	29	44	58	66	72	66	68	60	47	33	16	4
25	3	15	27	43	59	69	74	75	72	60	48	34	17	4
July 2	2	14	27	45	54	66	72	72	68	59	47	32	16	4
9	3	16	30	46	56	63	66	69	66	58	47	32	16	4
16	2	13	25	39	53	61	65	64	60	52	41	27	14	3
23	2	12	25	39	48	60	64	66	60	55	42	26	13	2
30	2	13	27	40	52	62	68	67	62	52	41	28	13	2
Aug. 6	2	10	22	37	52	60	66	68	60	53	42	26	12	2
13	2	10	23	38	48	60	68	68	61	52	40	25	10	2
20	1	12	27	42	54	61	66	67	60	52	38	28	10	1
27	1	10	25	38	50	60	67	64	57	48	37	22	7	1
Sept. 3	----	8	21	34	46	56	65	62	56	46	34	20	6	----
10	----	7	20	35	48	58	61	58	52	43	29	15	4	----
17	----	4	20	36	46	53	61	54	47	38	28	14	4	----
24	----	4	17	30	42	50	55	55	50	40	27	14	4	----
Oct. 1	----	3	16	30	40	50	54	54	50	40	28	13	2	----
8	----	2	18	34	44	54	56	56	50	38	26	11	1	----
15	----	2	12	30	36	47	53	53	50	35	24	8	1	----
22	----	1	13	29	39	50	55	55	46	36	24	9	1	----
29	----	----	8	22	34	42	48	46	41	32	20	7	----	----
Nov. 5	----	----	6	20	30	39	44	45	41	30	18	6	----	----
12	----	----	7	22	34	44	48	48	40	29	17	5	----	----
19	----	----	4	20	31	40	45	44	39	28	16	4	----	----
26	----	----	2	16	28	38	42	44	38	28	16	3	----	----
Dec. 3	----	----	2	15	26	34	39	39	34	24	13	3	----	----
10	----	----	2	12	22	32	34	36	30	22	12	2	----	----
17	----	----	2	14	26	33	38	38	33	24	12	2	----	----
24*	----	----	2	14	26	34	37	37	32	24	13	3	----	----
Means	1	6	16	30	42	52	57	57	52	42	30	16	6	1

* 8-day means.

TABLE 7.—*Mean hourly totals of solar and sky radiation on a horizontal surface, Fresno, Calif., 1936–39, inclusive (apparent solar time)*

Week beginning—	Gram-calories per square centimeter for hour ending—													
	A. M.						P. M.							
	6	7	8	9	10	11	Noon	1	2	3	4	5	6	7
Jan. 1	----	----	1	7	14	21	28	29	26	19	9	1	----	----
8	----	----	1	9	20	28	30	31	32	24	14	3	----	----
15	----	----	2	14	24	34	38	38	34	27	13	3	----	----
22	----	----	2	13	23	33	38	38	32	26	16	4	----	----
29	----	----	3	14	23	30	29	31	24	20	12	4	----	----
Feb. 5	----	----	5	14	27	36	41	39	32	28	16	6	----	----
12	----	----	6	18	28	36	38	35	35	30	19	7	----	----
19	----	----	9	24	38	46	52	52	48	39	26	10	----	----
26	----	2	14	28	44	54	59	57	53	42	28	13	2	----
Mar. 5	----	2	13	29	44	53	59	56	52	40	30	13	2	----
12	----	3	18	35	49	56	62	60	54	46	31	16	3	----
19	----	4	16	31	44	53	58	61	54	45	33	17	4	----
26	----	6	20	37	50	59	65	65	61	52	39	22	6	----
Apr. 2	----	8	26	44	57	63	68	70	65	54	40	23	8	----
9	1	11	28	45	60	69	74	77	71	61	46	27	10	1
16	1	13	32	49	63	72	76	76	72	61	45	29	13	1
23	2	14	31	49	64	70	76	78	73	59	44	28	12	1
30	2	16	34	52	66	75	80	82	76	66	57	34	16	2
May 7	3	19	38	55	69	79	82	81	74	64	52	34	17	3
14	4	20	38	55	70	80	84	82	78	68	54	37	19	4
21	6	22	40	56	69	77	81	78	77	68	56	38	20	5
28	6	21	39	54	67	76	82	83	77	69	57	39	21	5
June 4	6	22	40	57	70	80	84	85	81	68	54	39	21	6
11	7	22	40	58	70	77	81	80	76	68	53	37	22	6
18	8	24	43	59	72	80	84	84	78	68	56	40	23	7
25	7	24	41	56	70	79	84	83	77	69	56	40	23	7
July 2	7	24	43	59	72	81	86	86	79	69	57	41	22	7
9	7	22	41	58	70	79	86	84	79	67	54	40	21	6
16	6	22	39	56	70	79	84	82	78	69	56	40	21	6
23	4	19	36	51	65	76	81	80	74	65	53	37	19	4
30	4	19	38	56	69	78	83	84	77	66	54	37	18	4
Aug. 6	3	18	35	51	66	76	82	82	76	68	52	35	17	2
13	2	16	34	52	66	76	81	82	76	67	52	35	16	2
20	1	14	31	49	65	74	80	80	76	65	52	32	14	1
27	1	12	31	48	63	72	79	79	74	64	49	31	12	1
Sept. 3	----	10	38	47	62	72	77	76	72	62	46	28	10	----
10	----	8	23	40	55	68	72	73	66	57	42	23	6	----
17	----	6	22	39	54	64	69	70	63	53	37	19	4	----
24	----	3	17	32	46	58	64	61	55	46	32	17	3	----
Oct. 1	----	2	14	30	45	54	62	58	54	45	30	15	2	----
8	----	2	14	30	44	54	60	71	56	45	30	14	2	----
15	----	1	11	27	39	52	56	56	48	38	25	10	1	----
22	----	----	9	25	39	50	55	55	50	40	25	9	----	----
29	----	----	7	22	34	45	48	48	40	35	22	7	----	----
Nov. 5	----	----	5	19	32	44	49	48	44	39	20	6	----	----
12	----	----	4	18	30	41	46	46	41	30	17	4	----	----
19	----	----	4	16	27	37	43	42	37	28	15	3	----	----
26	----	----	2	12	23	34	40	40	36	27	15	2	----	----
Dec. 3	----	----	1	10	18	26	30	30	27	21	10	2	----	----
10	----	----	1	7	16	26	27	27	24	18	10	2	----	----
17	----	----	----	5	10	20	25	24	24	16	8	----	----	----
24*	----	----	1	7	16	27	27	28	27	19	10	1	----	----
Means	2	9	21	35	48	57	62	62	57	48	35	20	8	2

*8-day means.

TABLE 8.—*Mean hourly totals of solar and sky radiation on a horizontal surface, Washington, D. C., 1927–39, inclusive (apparent solar time)*

Week beginning—	Gram calories per square centimeter for hour ending—															
	A. M.								P. M.							
	5	6	7	8	9	10	11	Noon	1	2	3	4	5	6	7	8
Jan. 1	----	----	----	1.6	8.0	18.0	22.7	26.7	26.3	23.3	17.1	8.6	1.8	----	----	----
8	----	----	----	1.5	7.2	15.2	20.9	24.6	24.5	21.9	16.1	8.4	1.7	----	----	----
15	----	----	----	1.8	7.7	15.1	19.6	24.2	24.8	21.9	16.3	8.6	2.7	----	----	----
22	----	----	----	2.4	9.2	17.3	23.4	26.7	28.9	26.5	20.2	11.7	3.0	----	----	----
29	----	----	----	3.3	11.8	24.3	29.7	34.4	33.5	28.2	23.7	13.9	4.0	----	----	----
Feb. 5	----	----	0.3	3.9	12.8	22.8	29.6	35.1	35.3	31.2	24.6	14.6	4.7	0.3	----	----
12	----	----	0.4	4.8	14.1	24.1	30.8	34.6	34.4	30.3	24.4	14.7	6.1	0.5	----	----
19	----	----	0.7	6.7	17.8	28.0	35.2	39.6	39.6	34.4	26.9	17.4	7.6	0.7	----	----
26	----	----	1.2	9.2	20.0	30.5	37.5	41.0	40.5	37.7	29.6	20.6	9.9	1.2	----	----
Mar. 5	----	----	1.9	11.4	22.7	33.3	40.7	45.0	45.4	41.4	33.0	23.1	16.1	2.0	----	----
12	----	----	1.3	11.5	22.7	33.0	40.1	42.5	41.3	37.5	31.7	22.7	12.2	1.8	----	----
19	----	0.1	3.2	13.4	22.9	32.4	41.2	43.6	43.9	40.2	32.9	23.9	18.3	3.8	0.1	----
26	----	0.2	4.2	14.8	25.6	34.5	40.3	44.3	42.8	41.3	34.3	25.6	15.7	5.4	0.3	----
Apr. 2	----	0.4	5.6	15.9	26.0	35.2	41.4	44.8	46.1	43.4	35.7	27.2	16.1	6.0	0.5	----
9	----	0.8	7.8	19.1	31.1	40.9	47.9	51.0	51.4	45.8	37.8	28.1	17.0	6.9	0.6	----
16	----	1.3	9.0	20.1	32.2	44.0	52.3	52.1	51.9	46.7	41.2	31.7	21.7	9.3	1.3	----
23	----	1.7	10.7	23.7	36.7	45.9	53.7	58.5	57.1	51.2	45.7	36.8	24.5	11.5	2.1	----
30	----	2.7	11.8	24.3	37.3	49.0	57.3	60.8	60.5	57.0	48.8	36.5	24.9	12.9	2.9	----
May 7	----	2.8	10.5	22.1	32.1	41.9	50.1	55.8	56.5	53.6	46.8	35.8	24.4	12.6	2.9	----
14	0.1	3.6	12.3	25.4	37.4	46.7	53.4	57.1	55.8	52.3	47.2	36.2	25.4	12.8	3.8	0.1
21	0.2	4.2	14.4	27.5	40.4	52.7	59.1	61.9	63.1	59.3	50.7	39.5	27.0	14.5	4.2	0.2
28	0.3	5.2	16.3	30.9	43.8	53.3	61.2	63.6	62.5	57.4	50.4	39.8	27.8	16.0	5.4	0.3
June 4	0.5	5.6	16.2	30.1	41.5	53.0	59.0	61.8	61.7	58.3	51.0	40.2	28.0	15.5	5.5	0.5
11	0.5	5.2	14.8	28.8	39.4	50.9	58.3	59.4	61.3	60.8	52.2	43.3	27.8	15.3	5.5	0.5
18	0.5	5.3	15.9	28.0	39.8	49.9	55.6	59.3	59.3	54.7	47.3	38.9	28.8	16.0	5.7	0.6
25	0.6	6.1	16.6	30.6	42.2	53.3	60.3	64.6	64.2	58.8	51.4	40.1	28.3	15.5	5.7	0.6
July 2	0.5	5.7	17.2	31.1	43.2	53.5	60.8	65.6	65.0	62.6	55.4	41.5	30.3	17.5	6.4	0.5
9	0.4	5.3	14.7	26.1	39.0	50.3	57.4	63.0	62.9	59.5	50.1	39.0	27.3	15.1	5.3	0.5
16	0.3	5.3	14.5	26.7	36.7	48.1	54.5	57.3	58.0	52.7	48.0	36.9	24.4	13.5	4.5	0.3
23	0.2	3.7	14.4	26.3	38.2	49.6	55.2	59.6	61.5	56.5	50.8	39.4	30.8	14.7	3.8	0.2
30	0.1	3.5	13.1	25.9	39.4	49.6	58.3	62.8	65.1	59.5	49.8	39.2	26.2	13.7	3.3	0.1
Aug. 6	----	2.2	10.7	22.5	35.2	44.6	52.6	55.1	56.6	53.5	46.4	35.0	23.7	12.3	2.4	----
13	----	2.2	10.5	23.1	34.8	45.9	54.4	57.5	58.5	56.9	46.7	35.0	21.9	10.5	1.9	----
20	----	1.7	8.8	20.7	32.2	41.9	49.4	55.3	55.2	50.1	45.5	35.8	24.5	9.5	1.6	----
27	----	1.0	7.7	19.4	31.7	42.7	50.1	55.7	55.2	51.9	43.7	30.9	19.6	7.7	0.9	----
Sept. 3	----	0.6	6.2	17.0	28.5	41.3	46.5	52.0	51.1	47.5	39.7	30.4	18.4	9.5	0.8	----
10	----	0.4	5.3	15.5	36.7	29.0	44.0	48.6	50.0	44.9	39.1	29.1	17.6	6.1	0.4	----
17	----	0.2	4.3	16.7	28.4	39.2	45.8	49.0	49.9	46.2	39.3	28.9	16.1	4.6	0.2	----
24	----	----	3.4	13.2	24.4	34.8	40.5	48.0	49.6	46.7	39.5	28.1	15.0	4.1	----	----
Oct. 1	----	----	2.3	12.4	25.7	35.7	41.6	47.2	48.7	44.7	32.0	24.5	12.2	2.4	----	----
8	----	----	1.8	10.8	23.2	34.0	42.7	46.2	45.6	43.0	35.1	23.5	10.9	1.6	----	----
15	----	----	1.2	9.4	21.7	32.5	40.9	45.5	44.8	39.7	32.1	20.0	8.7	1.1	----	----
22	----	----	0.8	6.7	16.5	28.5	36.0	40.9	40.2	36.5	28.8	17.9	6.9	0.8	----	----
29	----	----	0.5	5.5	15.8	25.8	33.0	33.8	37.0	33.0	25.1	17.9	6.0	0.4	----	----
Nov. 5	----	----	0.3	4.2	13.6	22.9	31.5	34.7	35.0	30.6	23.8	14.3	4.5	0.3	----	----
12	----	----	0.1	3.1	10.9	19.4	27.8	31.6	31.2	26.2	19.8	11.3	3.2	0.1	----	----
19	----	----	----	2.4	10.1	19.3	26.1	30.0	29.8	25.1	20.6	10.6	2.6	----	----	----
26	----	----	----	1.8	8.7	18.0	24.7	27.0	27.1	23.8	16.3	9.9	2.2	----	----	----
Dec. 3	----	----	----	1.6	8.2	17.2	24.8	30.3	27.8	25.1	17.7	9.5	1.8	----	----	----
10	----	----	----	1.3	6.7	13.2	19.0	22.2	22.0	18.9	14.0	7.3	1.3	----	----	----
17	----	----	----	1.3	6.7	14.8	20.9	24.0	24.0	20.7	14.6	7.8	1.5	----	----	----
24*	----	----	----	1.4	7.8	15.6	22.0	24.4	25.3	21.8	15.5	8.0	1.7	----	----	----
Means	0.1	1.5	6.0	14.6	25.1	34.9	42.0	45.8	46.0	42.2	35.1	25.4	15.1	6.3	1.5	0.1

* 8-day means.

TABLE 9.—*Mean hourly totals of solar and sky radiation on a horizontal surface, New York, N. Y., 1936–39, inclusive (apparent solar time)*

Week beginning	Gram calories per square centimeter for hour ending—															
	A. M.								P. M.							
	5	6	7	8	9	10	11	Noon	1	2	3	4	5	6	7	8
Jan. 1	----	----	----	2	6	12	16	19	17	14	10	4	1	----	----	----
8	----	----	----	1	6	13	19	20	18	15	10	4	1	----	----	----
15	----	----	----	1	6	12	16	19	20	18	12	6	2	----	----	----
22	----	----	----	1	8	16	22	26	27	27	19	12	2	----	----	----
29	----	----	----	2	8	18	23	26	25	23	18	10	3	----	----	----
Feb. 5	----	----	----	2	10	18	24	29	30	28	23	14	5	----	----	----
12	----	----	----	4	12	19	24	28	28	25	20	14	6	----	----	----
19	----	----	----	6	16	24	30	31	30	26	20	12	6	----	----	----
26	----	----	1	6	16	27	37	40	41	34	38	18	9	1	----	----
Mar. 5	----	----	1	7	16	24	39	36	32	31	28	18	10	2	----	----
12	----	----	2	8	16	23	26	28	28	24	22	16	10	3	----	----
19	----	----	4	14	28	38	46	51	50	44	37	26	14	4	----	----
26	----	----	5	14	26	34	42	45	48	40	34	24	16	5	----	----
Apr. 2	----	----	4	10	21	29	32	34	35	32	30	20	14	5	----	----
9	----	1	6	16	28	39	43	45	43	39	33	24	16	6	1	----
16	----	2	6	17	28	40	45	46	47	44	38	28	19	9	2	----
23	----	2	10	22	34	46	52	54	56	50	42	32	22	9	2	----
30	----	2	11	25	38	48	57	62	57	54	44	32	24	12	3	----
May 7	----	2	11	20	31	43	53	56	54	50	47	37	25	15	4	----
14	----	4	13	28	38	46	51	53	50	48	42	35	28	15	6	----
21	----	4	14	26	36	54	56	58	61	60	50	46	28	16	6	----
28	----	4	16	29	41	52	60	64	64	58	50	42	30	18	7	----
June 4	----	5	16	27	39	52	58	59	59	58	49	39	29	16	6	----
11	1	4	14	25	41	46	50	54	52	52	47	36	23	12	6	1
18	1	5	13	24	34	44	47	51	54	51	45	36	26	15	6	1
25	1	4	12	22	32	42	46	48	42	42	39	30	19	12	4	1
July 2	1	8	20	30	44	56	62	62	62	60	52	43	31	18	6	1
9	----	4	13	25	36	49	56	62	58	51	41	34	22	13	6	----
16	----	3	11	22	35	44	49	51	50	51	45	36	24	13	5	----
23	----	2	10	18	27	38	45	52	54	48	39	29	20	11	4	----
30	----	2	11	24	35	48	54	58	57	52	47	34	25	13	4	----
Aug. 6	----	2	9	18	31	44	50	56	50	47	37	33	22	11	3	----
13	----	2	10	20	30	42	52	56	52	49	40	35	23	12	2	----
20	----	2	8	18	30	40	45	49	50	44	35	26	18	8	2	----
27	----	1	6	14	27	37	44	51	50	44	36	30	20	8	2	----
Sept. 3	----	1	5	18	29	41	49	52	56	50	41	30	18	8	2	----
10	----	1	4	13	25	34	41	44	45	44	38	27	18	8	1	----
17	----	----	3	11	21	28	35	38	37	38	34	24	15	6	----	----
24	----	----	3	10	19	28	37	41	48	35	32	23	11	3	----	----
Oct. 1	----	----	2	10	20	31	38	42	48	39	30	20	12	3	----	----
8	----	----	2	8	18	29	34	37	36	34	26	18	9	3	----	----
15	----	----	2	9	20	30	38	42	40	38	28	18	7	1	----	----
22	----	----	----	4	13	20	25	27	31	27	20	12	5	----	----	----
29	----	----	----	4	11	23	30	33	32	31	22	13	4	----	----	----
Nov. 5	----	----	----	3	11	20	28	33	33	30	22	12	4	----	----	----
12	----	----	----	2	10	22	28	29	28	26	19	10	2	----	----	----
19	----	----	----	2	7	15	21	24	24	20	14	7	2	----	----	----
26	----	----	----	1	8	22	23	28	26	20	14	7	2	----	----	----
Dec. 3	----	----	----	1	5	10	14	21	21	17	13	6	1	----	----	----
10	----	----	----	1	4	10	20	23	22	19	14	6	1	----	----	----
17	----	----	----	----	4	10	16	20	21	15	10	5	----	----	----	----
24*	----	----	----	1	4	10	18	22	22	20	14	6	1	----	----	----
Means	0.1	1	5	12	22	32	38	41	41	37	31	22	14	6	2	0.1

* 8-day means.

TABLE 10.—*Mean hourly totals of solar and sky radiation on a horizontal surface, Lincoln, Nebr., 1925–39, inclusive (apparent solar time)*

Week beginning	Gram-calories per square centimeter for hour ending—													
	A. M.							P. M.						
	6	7	8	9	10	11	Noon	1	2	3	4	5	6	7
Jan. 1	----	----	1	7	18	25	31	31	27	19	10	1	----	----
8	----	----	1	8	19	26	33	31	27	20	10	2	----	----
15	----	----	1	9	20	28	33	33	28	21	11	2	----	----
22	----	----	2	13	25	34	40	39	34	26	14	3	----	----
29	----	----	3	12	23	32	37	37	33	25	14	4	----	----
Feb. 5	----	----	4	16	27	37	41	42	37	29	17	5	----	----
12	----	----	5	16	28	38	43	42	39	30	18	6	----	----
19	----	----	5	19	32	41	47	46	40	32	21	7	----	----
26	----	1	10	22	37	45	51	51	45	36	24	10	1	----
Mar. 5	----	1	11	25	38	47	52	52	47	37	25	12	2	----
12	----	2	14	28	39	47	51	50	45	37	27	14	3	----
19	----	3	15	29	41	50	55	55	48	41	29	16	5	----
26	----	4	16	28	40	49	53	53	49	40	29	16	5	----
Apr. 2	----	5	17	30	41	49	53	54	49	42	30	18	6	----
9	----	7	21	35	48	55	60	60	54	44	32	20	9	----
16	1	9	22	37	48	56	60	59	54	45	35	22	10	2
23	1	10	22	35	45	50	55	57	51	44	34	22	11	2
30	2	12	25	38	40	56	59	57	53	47	43	25	12	3
May 7	2	12	23	34	45	51	54	51	48	42	34	23	13	3
14	4	14	28	40	51	59	64	64	58	51	42	29	16	5
21	5	18	32	46	57	65	68	67	64	57	45	32	18	6
28	5	16	30	41	52	56	62	64	59	51	40	29	17	6
June 4	6	19	31	44	54	60	68	65	60	53	43	31	19	6
11	5	16	29	42	54	60	63	64	62	54	42	30	19	7
18	6	18	31	46	57	66	68	70	62	57	46	34	20	7
25	6	19	33	46	58	68	73	70	65	57	46	33	20	7
July 2	6	18	33	47	58	67	72	72	69	59	47	34	20	7
9	6	18	33	46	59	68	71	71	67	59	47	34	19	6
16	5	17	30	45	58	67	70	70	66	56	45	32	18	6
23	4	16	31	42	56	64	68	70	66	55	43	29	15	5
30	3	15	27	42	51	60	64	65	59	50	41	29	16	4
Aug. 6	2	12	25	39	51	61	65	65	59	49	39	27	13	3
13	1	10	22	36	49	59	64	65	61	50	39	26	12	2
20	1	10	23	37	49	59	64	65	57	50	38	25	11	2
27	1	8	19	32	43	50	60	60	54	45	36	22	8	1
Sept. 3	----	7	21	35	46	56	61	61	57	45	34	20	7	----
10	----	5	17	31	42	51	67	67	53	44	33	19	6	----
17	----	4	17	31	44	54	59	58	52	44	31	17	5	----
24	----	2	12	26	36	46	51	50	45	37	27	13	3	----
Oct. 1	----	2	11	25	36	43	49	49	44	36	25	12	2	----
8	----	1	9	21	31	40	45	46	40	32	22	10	2	----
15	----	1	8	20	33	42	46	46	42	33	21	9	1	----
22	----	----	6	19	31	40	46	46	41	34	21	7	----	----
29	----	----	5	14	25	34	38	39	34	26	16	5	----	----
Nov. 5	----	----	4	14	25	34	39	39	35	26	15	5	----	----
12	----	----	2	11	21	29	34	34	30	22	12	3	----	----
19	----	----	2	11	22	30	34	35	30	20	12	3	----	----
26	----	----	1	9	19	26	31	29	27	19	9	2	----	----
Dec. 3	----	----	1	8	17	25	29	29	26	19	9	2	----	----
10	----	----	1	6	15	23	27	27	24	16	8	1	----	----
17	----	----	1	8	17	26	30	31	26	19	9	1	----	----
24*	----	----	1	7	16	24	28	30	26	19	9	1	----	----
Means	1	6	15	27	38	47	52	52	47	38	28	16	7	2

*8-day means.

TABLE 11.—*Mean maximum hourly totals of solar and sky radiation on a horizontal surface, Lincoln, Nebr., 1925–39, inclusive (apparent solar time)*

Week beginning—	Gram-calories per square centimeter for hour ending—													
	A. M.							P. M.						
	6	7	8	9	10	11	Noon	1	2	3	4	5	6	7
Jan. 1	----	----	1	10	24	35	39	40	35	25	13	2	----	----
8	----	----	2	11	23	34	41	41	34	25	13	3	----	----
15	----	----	2	12	27	36	43	41	37	24	13	3	----	----
22	----	----	3	15	29	43	49	48	42	32	16	4	----	----
29	----	----	4	15	31	43	49	49	44	33	19	4	----	----
Feb. 5	----	----	6	20	34	44	48	50	44	35	19	7	----	----
12	----	----	6	21	38	48	53	52	51	42	25	9	----	----
19	----	----	8	22	41	52	61	60	53	42	28	10	----	----
26	----	1	12	30	45	56	64	63	59	47	29	13	2	----
Mar. 5	----	2	13	31	48	56	63	61	56	46	32	15	3	----
12	----	4	18	35	48	57	60	59	52	44	33	19	4	----
19	----	5	20	37	52	66	69	65	59	53	36	20	6	----
26	----	6	21	36	52	66	71	74	66	55	35	24	7	----
Apr. 2	----	8	23	42	55	67	74	76	67	59	42	26	8	----
9	1	12	29	44	62	72	78	79	68	57	43	26	12	2
16	3	13	30	47	63	71	75	75	72	61	44	31	12	2
23	2	16	34	52	67	78	84	83	72	60	48	34	15	3
30	5	16	37	51	61	71	74	74	64	61	46	34	16	4
May 7	4	16	31	45	55	65	69	75	72	64	49	33	17	5
14	6	21	39	58	70	83	88	86	75	68	57	40	21	7
21	7	33	41	54	69	76	82	82	78	66	52	37	22	7
28	7	22	40	59	73	79	82	81	75	68	55	42	24	8
June 4	10	23	42	57	66	75	83	80	75	66	50	37	22	8
11	8	24	39	59	73	83	86	88	82	74	60	48	26	11
18	8	24	39	55	69	78	80	84	79	71	56	42	25	8
25	8	25	40	57	69	78	84	83	78	70	57	40	24	10
July 2	9	25	42	58	71	81	83	83	81	69	56	40	24	9
9	8	22	42	56	71	80	81	82	80	71	56	40	24	8
16	6	21	37	54	69	77	82	83	76	66	60	36	22	8
23	5	19	38	53	65	72	81	82	78	62	51	38	20	6
30	4	17	36	49	62	70	77	76	69	59	46	35	18	5
Aug. 6	4	16	31	49	64	78	76	78	71	61	46	35	17	4
13	2	12	30	45	64	73	83	79	78	63	46	31	15	3
20	2	13	28	44	60	72	75	78	74	59	48	34	14	3
27	1	10	25	44	61	69	72	71	66	56	43	34	11	2
Sept. 3	----	9	26	41	54	64	72	73	70	56	42	27	10	----
10	----	8	26	42	57	70	74	75	68	58	43	25	8	----
17	----	6	23	39	54	65	70	69	65	54	40	23	6	----
24	----	4	16	34	45	59	65	65	60	50	34	17	4	----
Oct. 1	----	2	16	32	45	55	65	61	52	44	31	15	4	----
8	----	1	12	26	40	53	56	61	55	44	30	14	3	----
15	----	1	12	26	41	53	59	59	54	43	29	12	2	----
22	----	----	10	25	40	50	54	53	49	40	24	9	----	----
29	----	----	8	20	35	46	48	49	44	35	21	8	----	----
Nov. 5	----	----	6	18	34	44	47	48	44	34	20	6	----	----
12	----	----	4	16	31	40	47	48	41	33	20	5	----	----
19	----	----	3	16	29	37	44	42	37	27	13	4	----	----
26	----	----	2	10	24	32	40	40	35	26	13	3	----	----
Dec. 3	----	----	1	10	25	34	38	36	33	24	13	3	----	----
10	----	----	1	11	25	35	40	38	33	22	11	2	----	----
17	----	----	1	10	22	32	36	38	33	23	12	2	----	----
24*	----	----	1	10	22	30	34	36	33	24	12	2	----	----
Means	2	9	20	35	49	59	64	64	59	49	35	21	9	2
Percentage of average values	----	----	133	130	129	123	123	123	126	126	125	131	----	----

*8-day means.

TABLE 12.—*Mean minimum hourly totals of solar and sky radiation on a horizontal surface, Lincoln, Nebr., 1925–39, inclusive (apparent solar time)*

Week beginning—	Gram-calories per square centimeter for hour ending—													
	A. M.							P. M.						
	6	7	8	9	10	11	Noon	1	2	3	4	5	6	7
Jan. 1	----	----	----	3	7	10	12	14	11	6	2	----	----	---
8	----	----	1	4	10	17	18	20	20	14	7	1	----	---
15	----	----	1	6	12	17	16	18	18	12	7	2	----	---
22	----	----	1	9	17	18	28	28	26	18	10	2	----	---
29	----	----	2	7	15	21	22	22	19	14	8	2	----	---
Feb. 5	----	----	2	8	17	23	30	29	28	20	13	4	----	---
12	----	----	3	12	21	27	30	28	26	22	13	4	----	---
19	----	----	4	14	21	31	40	38	33	24	16	5	----	---
26	----	1	7	16	26	30	33	33	24	19	14	5	1	---
Mar. 5	----	1	8	19	30	39	44	42	36	26	18	8	1	---
12	----	1	10	21	29	36	40	37	32	26	21	11	2	---
19	----	2	10	19	25	35	39	41	34	26	17	9	2	---
26	----	2	11	18	27	35	40	31	31	27	19	9	1	---
Apr. 2	----	3	8	16	25	27	29	36	35	33	25	13	4	---
9	----	2	6	12	18	20	22	20	21	15	11	7	2	---
16	----	6	12	21	31	34	29	36	39	33	18	10	6	---
23	----	4	7	13	20	26	26	25	24	16	13	11	6	---
30	1	6	11	17	23	22	28	30	26	25	20	12	8	1
May 7	1	6	13	19	32	33	37	31	29	26	22	17	8	1
14	1	4	8	10	13	18	23	19	15	13	10	7	4	2
21	2	12	25	28	36	43	50	41	30	32	30	19	14	4
28	2	8	17	23	28	33	37	38	35	29	19	16	10	4
June 4	3	11	16	24	36	34	49	45	37	38	31	22	14	4
11	3	10	18	24	32	41	41	34	28	27	22	15	9	4
18	4	11	24	37	43	50	42	36	41	43	34	25	14	5
25	5	13	22	36	47	48	58	60	52	49	36	24	14	5
July 2	4	12	22	30	36	49	58	56	52	44	32	25	16	5
9	3	8	19	32	40	40	42	42	42	44	37	28	14	5
16	3	11	21	34	48	56	53	56	44	41	39	25	12	4
23	2	12	21	34	42	49	59	61	56	41	32	22	12	3
30	1	9	15	22	30	41	49	57	46	38	29	24	13	3
Aug. 6	1	7	20	29	40	51	53	53	40	34	21	16	9	2
13	1	5	13	25	32	35	49	51	51	40	28	22	10	1
20	1	5	16	28	34	41	45	51	46	38	29	20	8	1
27	----	3	8	16	24	30	33	36	27	28	17	11	4	---
Sept. 3	----	2	9	19	24	37	38	45	36	24	18	8	1	---
10	----	3	11	20	25	33	35	35	30	25	16	9	4	---
17	----	2	8	19	31	37	39	36	30	26	19	9	4	---
24	----	1	4	12	10	21	26	21	18	16	12	7	2	---
Oct. 1	----	1	6	14	21	21	25	27	23	17	15	8	1	---
8	----	----	6	14	22	27	30	33	29	22	14	7	----	---
15	----	----	4	15	20	18	19	20	21	16	9	4	----	---
22	----	----	2	10	18	27	27	27	29	26	16	5	----	---
29	----	----	2	8	13	24	23	23	19	15	8	3	----	---
Nov. 5	----	----	2	6	12	19	27	29	24	18	11	3	----	---
12	----	----	1	2	5	8	12	14	12	9	5	1	----	---
19	----	----	1	7	16	16	18	19	12	10	7	1	----	---
26	----	----	1	3	6	9	10	14	12	8	4	1	----	---
Dec. 3	----	----	----	3	10	16	18	18	15	11	4	----	----	---
10	----	----	----	2	5	9	12	12	7	5	2	----	----	---
17	----	----	----	5	14	21	25	25	22	16	7	----	----	---
24*	----	----	----	3	9	14	16	17	15	10	6	----	----	---
Means	1	4	9	16	24	29	33	33	29	24	17	10	4	1
Percentage of average values	----	----	60	59	63	62	63	63	62	63	61	62	----	---

*8-day means.

TABLE 13.—*Mean hourly totals of solar and sky radiation received on a horizontal surface, Chicago, Ill., 1923–39, inclusive (apparent solar time)*

Week beginning—	Gram calories per square centimeter for hour ending—															
	A. M.								P. M.							
	5	6	7	8	9	10	11	Noon	1	2	3	4	5	6	7	8
Jan. 1	----	----	----	0.4	3.4	8.4	11.9	15.2	14.8	12.7	9.1	4.4	0.6	----	----	----
8	----	----	----	0.4	3.3	7.9	12.4	14.9	14.7	12.2	8.3	3.9	0.5	----	----	----
15	----	----	----	0.7	3.7	8.8	13.3	17.1	17.2	15.0	10.7	5.2	0.7	----	----	----
22	----	----	----	1.0	5.8	12.1	17.4	21.4	22.3	19.2	12.6	5.9	0.8	----	----	----
29	----	----	----	1.2	5.7	11.6	17.1	20.6	20.8	18.1	13.4	7.3	1.7	----	----	----
Feb. 5	----	----	----	1.9	6.7	13.2	18.4	22.5	23.0	19.9	14.5	7.6	2.0	----	----	----
12	----	----	0.1	2.4	8.0	14.8	20.1	21.0	23.6	21.8	16.1	9.6	3.1	0.2	----	----
19	----	----	0.4	3.7	10.9	14.8	24.6	27.9	27.8	24.9	18.8	11.4	4.3	0.4	----	----
26	----	----	0.5	4.8	12.6	20.5	27.1	31.5	32.1	29.1	23.1	14.0	5.8	0.6	----	----
Mar. 5	----	----	1.0	6.0	13.6	21.6	28.7	32.0	31.6	28.8	22.6	16.1	7.5	1.0	----	----
12	----	----	1.4	7.0	15.2	22.1	29.9	32.6	33.6	30.2	24.1	16.5	7.4	1.8	----	----
19	----	----	2.2	8.9	17.0	25.6	30.6	32.8	34.3	33.1	26.9	18.3	9.4	2.2	----	----
26	----	----	3.1	9.6	18.1	26.8	32.7	35.5	34.1	31.3	26.4	18.9	10.5	3.1	----	----
Apr. 2	----	----	4.5	13.4	21.6	31.1	36.6	40.6	39.9	34.9	27.8	19.4	12.1	4.2	----	----
9	----	0.7	6.1	14.9	25.6	35.7	42.8	44.4	44.5	40.4	33.6	24.3	14.9	5.6	0.6	----
16	----	1.2	7.1	13.8	25.5	33.8	38.7	41.2	42.3	37.8	30.6	25.5	16.9	7.4	1.0	----
23	----	1.8	8.1	16.6	26.2	35.7	43.2	44.9	44.4	41.4	34.8	28.1	18.8	9.1	1.9	----
30	----	2.2	8.4	19.4	29.4	37.9	42.5	45.7	46.9	44.4	38.8	30.5	20.3	10.2	2.6	----
May 7	----	3.1	11.7	21.0	31.2	37.2	47.1	49.2	50.4	47.2	39.5	28.5	20.2	10.6	2.9	----
14	----	3.7	11.7	21.8	31.3	39.6	46.7	50.5	50.9	48.2	42.2	33.1	23.2	12.8	3.6	----
21	0.5	4.2	13.6	24.6	34.6	42.3	51.2	54.8	53.3	49.4	43.9	35.5	25.6	13.8	4.3	0.4
28	0.4	5.1	13.9	25.9	35.7	45.6	52.1	53.8	54.1	50.1	43.1	34.8	25.6	14.6	5.1	0.2
June 4	0.5	5.2	14.2	25.5	36.2	45.4	52.3	55.6	53.0	50.1	44.8	35.2	25.8	15.6	5.0	0.6
11	0.7	5.7	14.4	25.0	36.1	44.6	50.7	55.0	56.0	51.3	43.9	36.2	26.0	15.1	6.1	0.8
18	0.8	5.6	14.9	26.6	37.0	44.8	49.5	53.8	52.9	50.7	45.3	36.5	26.2	16.2	5.6	0.8
25	0.7	5.6	14.9	24.9	36.4	42.9	48.8	50.6	51.4	49.1	42.0	35.0	25.8	14.9	5.5	0.6
July 2	0.6	5.4	14.5	25.3	36.2	45.3	50.9	53.6	55.2	53.6	45.4	39.1	27.9	16.0	6.0	0.6
9	0.5	5.4	14.6	25.7	36.3	45.9	52.7	57.7	54.4	51.8	45.5	35.3	25.9	14.9	5.6	0.5
16	0.4	5.1	14.4	25.1	34.4	46.8	51.9	52.6	53.6	50.4	45.0	36.4	24.9	14.5	4.9	0.3
23	0.3	4.3	13.5	25.1	37.1	46.7	52.7	55.9	55.4	52.9	46.3	36.7	24.1	13.3	3.9	0.2
30	----	3.4	11.5	23.3	32.0	41.2	46.5	48.4	48.7	45.8	40.4	31.7	22.4	11.9	3.2	----
Aug. 6	----	3.0	10.7	21.2	28.7	40.9	47.3	50.7	52.0	48.8	41.4	29.2	20.7	10.4	2.4	----
13	----	2.3	9.5	20.1	31.4	42.1	48.5	50.8	50.3	47.1	40.1	31.1	20.3	9.6	2.0	----
20	----	1.7	8.9	18.5	30.6	41.4	49.0	53.2	53.6	50.9	43.0	32.6	20.9	9.4	1.8	----
27	----	0.9	6.8	17.3	27.9	37.8	45.7	48.1	45.6	41.3	34.1	27.4	16.9	7.0	0.9	----
Sept. 3	----	0.7	5.9	15.2	27.3	36.1	43.9	47.1	47.5	42.1	34.4	26.6	16.3	6.1	0.7	----
10	----	----	4.2	13.4	23.6	33.4	38.9	45.0	43.3	37.2	31.3	23.7	13.6	4.4	----	----
17	----	----	3.9	13.1	24.7	34.3	43.3	47.6	47.5	44.1	36.6	25.9	13.8	3.8	----	----
24	----	----	2.3	9.9	19.9	28.4	35.9	40.1	39.1	36.8	29.4	20.0	10.3	2.2	----	----
Oct. 1	----	----	1.6	8.2	17.7	26.5	35.5	38.8	38.1	33.8	25.8	18.3	8.4	1.4	----	----
8	----	----	0.9	6.0	14.8	22.8	29.9	33.0	33.4	30.8	24.4	16.2	6.7	0.8	----	----
15	----	----	0.5	5.1	13.6	22.4	27.5	32.5	32.4	27.8	22.2	14.1	5.1	0.5	----	----
22	----	----	----	3.2	10.4	17.0	24.6	27.4	28.7	24.9	18.4	12.4	3.8	----	----	----
29	----	----	----	2.5	8.5	16.2	22.1	24.0	25.4	22.8	16.7	9.4	2.7	----	----	----
Nov. 5	----	----	----	1.7	7.5	14.3	19.8	23.2	24.2	20.6	15.5	8.3	2.0	----	----	----
12	----	----	----	1.1	5.4	11.1	16.5	19.8	20.3	18.2	11.8	6.4	1.3	----	----	----
19	----	----	----	0.9	6.0	13.1	17.9	20.8	20.0	17.1	11.9	6.2	1.1	----	----	----
26	----	----	----	0.5	3.9	8.8	13.9	17.3	17.0	14.9	10.2	4.7	0.6	----	----	----
Dec. 3	----	----	----	----	2.8	6.9	10.9	13.6	14.1	12.4	8.5	3.8	----	----	----	----
10	----	----	----	----	2.7	7.9	12.4	14.9	15.1	12.9	8.9	3.8	----	----	----	----
17	----	----	----	----	2.8	7.2	12.2	14.2	15.0	12.5	8.2	3.6	----	----	----	----
24*	----	----	----	----	3.5	9.0	12.5	15.0	15.2	12.9	8.7	3.7	----	----	----	----
Means	0.1	1.5	5.3	11.6	19.6	27.5	33.6	36.7	36.8	33.8	27.7	20.2	12.0	5.5	1.5	0.1

*8-day means.

TABLE 14.—*Mean hourly totals of solar and sky radiation on a horizontal surface, Blue Hill, Mass., 1936–39, inclusive (apparent solar time)*

Week beginning	Gram calories per square centimeter for hour ending—															
	A. M.								P. M.							
	5	6	7	8	9	10	11	Noon	1	2	3	4	5	6	7	8
Jan. 1	----	----	----	2	7	16	21	25	22	18	14	6	1	----	----	----
8	----	----	----	2	8	18	26	29	30	25	18	8	2	----	----	----
15	----	----	----	2	8	18	24	26	27	24	17	8	2	----	----	----
22	----	----	----	2	11	22	29	31	33	28	22	12	3	----	----	----
29	----	----	----	5	14	26	32	33	32	30	28	11	3	----	----	----
Feb. 5	----	----	1	5	14	26	32	33	32	30	21	11	3	----	----	----
12	----	----	----	9	14	26	30	32	32	29	20	12	4	----	----	----
19	----	----	1	9	19	29	36	38	36	32	25	15	6	1	----	----
26	----	----	2	9	20	31	41	47	48	42	34	22	10	1	----	----
Mar. 5	----	----	2	13	24	28	40	44	43	39	31	21	11	2	----	----
12	----	----	4	11	18	35	43	42	38	32	28	18	8	2	----	----
19	----	----	5	17	29	42	50	52	54	48	30	28	16	5	----	----
26	----	----	6	19	30	40	47	51	51	46	38	27	16	5	----	----
Apr. 2	----	1	8	18	28	38	40	42	43	39	31	22	15	6	----	----
9	----	1	6	15	24	30	34	38	34	33	32	27	21	7	1	----
16	----	2	10	20	32	40	45	50	50	43	45	26	18	8	2	----
23	----	3	12	26	38	48	50	55	54	50	42	33	23	10	2	----
30	----	4	13	24	39	51	62	64	63	58	49	37	25	11	2	----
May 7	----	4	13	26	38	47	50	52	56	56	45	36	21	9	3	----
14	----	5	16	30	40	52	58	53	67	54	51	43	22	11	3	----
21	----	5	16	29	39	48	56	56	59	59	54	43	26	15	4	
28	1	8	22	35	47	60	63	74	71	68	58	45	30	18	5	1
June 4	1	6	18	32	45	55	59	74	70	65	48	46	32	17	5	1
11	1	5	16	26	38	47	49	55	58	56	46	41	29	18	5	1
18	1	7	19	32	44	55	61	67	66	62	52	42	31	19	6	1
25	1	4	12	20	31	40	44	50	48	44	37	35	24	15	5	1
July 2	1	8	20	34	46	59	67	72	73	68	56	47	32	18	6	1
9	1	6	16	26	37	47	56	60	63	61	54	37	25	14	4	1
16	----	6	17	30	42	51	58	63	60	57	58	36	24	15	5	----
23	----	4	14	24	35	42	53	57	60	57	44	37	23	12	4	----
30	----	3	12	24	40	51	60	67	62	60	50	44	28	12	4	
Aug. 6	----	3	13	27	40	50	60	60	63	58	49	40	26	12	3	----
13	----	2	11	24	37	48	55	58	62	56	46	36	24	12	3	----
20	----	1	9	21	34	48	52	57	56	53	41	33	20	9	2	----
27	----	1	8	19	34	46	53	54	53	49	42	33	22	9	2	----
Sept. 3	----	1	10	25	38	52	62	66	62	58	48	38	22	8	1	----
10	----	----	6	17	28	38	48	52	52	49	38	26	16	6	----	----
17	----	----	5	16	26	36	42	42	44	41	33	26	15	5	----	----
24	----	----	4	14	26	37	44	50	50	42	36	25	14	4	----	----
Oct. 1	----	----	2	11	22	31	39	46	46	40	31	23	12	2	----	----
8	----	----	1	10	23	34	43	45	43	39	30	19	9	2	----	----
15	----	----	1	9	22	33	39	43	41	38	29	18	8	1	----	----
22	----	----	----	6	16	25	30	33	32	28	22	14	6	----	----	----
29	----	----	----	4	15	26	32	35	35	32	24	15	5	----	----	----
Nov. 5	----	----	----	4	12	22	32	38	37	38	25	14	4	----	----	----
12	----	----	----	3	12	22	27	32	32	26	20	11	2	----	----	----
19	----	----	----	2	8	16	20	22	23	20	14	8	2	----	----	----
26	----	----	----	2	10	19	28	31	32	28	19	10	2	----	----	----
Dec. 3	----	----	----	1	6	13	18	21	20	18	13	6	1	----	----	----
10	----	----	----	1	7	15	20	27	27	22	15	8	1	----	----	----
17	----	----	----	1	6	13	20	24	22	20	14	6	1	----	----	----
24*	----	----	----	1	7	16	22	25	26	22	14	8	2	----	----	----
Means	0.1	2	7	15	26	36	42	46	46	42	34	25	14	6	1	0.1

* 8-day means.

TABLE 15.—*Mean hourly totals of solar and sky radiation on a horizontal surface, Twin Falls, Idaho, 1936–39, inclusive (apparent solar time)*

Week beginning—	Gram-calories per square centimeter for hour ending—															
	A. M.								P. M.							
	5	6	7	8	9	10	11	Noon	1	2	3	4	5	6	7	8
Jan. 1	----	----	----	1	5	14	20	23	24	20	15	7	1	----	----	----
8	----	----	----	1	5	12	18	21	21	18	14	6	2	----	----	----
15	----	----	----	1	5	14	21	24	26	22	17	9	1	----	----	----
22	----	----	----	1	8	19	26	28	30	28	22	12	2	----	----	----
29	----	----	----	2	8	17	25	28	30	27	20	13	4	----	----	----
Feb. 5	----	----	----	3	11	22	28	31	33	28	22	14	6	----	----	----
12	----	----	1	6	15	30	32	34	36	32	24	18	8	1	----	----
19	----	----	1	7	17	27	36	38	38	34	29	17	9	1	----	----
26	----	----	1	9	19	31	38	40	41	38	31	21	11	1	----	----
Mar. 5	----	----	2	14	27	28	46	48	50	47	36	26	14	3	----	----
12	----	----	3	12	22	30	37	41	40	36	28	23	13	3	----	----
19	----	----	6	18	30	42	49	49	50	47	40	29	16	4	----	----
26	----	----	8	21	32	41	49	51	51	44	38	27	17	6	----	----
Apr. 2	----	1	12	26	42	49	58	60	58	47	40	31	20	8	1	----
9	----	2	12	25	37	49	54	54	55	54	45	32	20	10	2	----
16	----	3	17	31	44	56	64	64	65	58	50	37	26	13	3	----
23	----	4	16	29	41	52	57	60	58	52	44	38	23	12	3	----
30	----	6	17	25	40	49	58	58	58	55	47	38	26	14	6	----
May 7	1	9	22	38	50	61	68	68	69	65	55	43	30	17	6	1
14	1	9	21	32	44	55	60	60	70	63	52	42	31	17	7	1
21	1	12	29	43	54	64	71	72	71	65	58	47	35	20	8	1
28	1	10	24	38	49	58	66	65	67	62	53	42	33	20	9	1
June 4	1	10	22	34	47	57	64	66	68	61	56	46	32	22	10	1
11	1	8	20	34	50	60	62	60	60	57	49	41	31	21	11	2
18	2	12	24	37	50	60	65	70	70	64	55	43	32	22	12	2
25	2	11	19	37	47	55	64	64	65	56	52	42	30	22	10	2
July 2	1	9	20	32	43	53	62	65	66	58	51	43	33	22	9	1
9	1	9	23	38	50	62	65	67	64	58	53	39	30	18	8	1
16	1	10	24	38	52	63	68	71	72	65	56	47	34	21	8	1
23	1	6	18	32	46	57	64	64	62	61	53	40	29	18	7	1
30	----	6	20	33	45	56	63	66	66	63	56	44	31	18	6	----
Aug. 6	----	5	17	31	46	59	65	68	66	57	50	42	30	16	4	----
13	----	4	18	32	47	57	64	67	67	58	51	42	29	15	3	----
20	----	4	16	30	44	54	62	66	64	58	51	38	26	12	3	----
27	----	2	11	25	38	51	57	56	58	54	50	36	23	9	1	----
Sept. 3	----	2	12	27	40	51	59	62	63	56	47	37	20	8	1	----
10	----	1	10	24	36	45	48	55	57	53	45	34	17	5	1	----
17	----	----	7	22	36	46	52	53	54	52	42	30	17	4	----	----
24	----	----	5	16	32	42	51	52	53	46	38	23	13	3	----	----
Oct. 1	----	----	3	13	24	32	39	41	42	39	32	22	11	2	----	----
8	----	----	2	10	21	30	38	42	44	40	33	22	10	2	----	----
15	----	----	1	9	20	30	36	36	36	32	25	16	6	1	----	----
22	----	----	1	8	17	32	38	40	40	35	27	16	6	1	----	----
29	----	----	----	4	13	22	29	31	34	33	25	15	4	----	----	----
Nov. 5	----	----	----	4	14	25	31	28	32	28	22	13	3	----	----	----
12	----	----	----	2	8	19	24	26	29	26	20	10	3	----	----	----
19	----	----	----	2	8	18	25	27	28	25	19	9	2	----	----	----
26	----	----	----	2	6	15	22	27	25	22	16	8	2	----	----	----
Dec. 3	----	----	----	1	5	14	20	23	24	20	14	6	1	----	----	----
10	----	----	----	1	5	13	20	22	22	18	14	6	1	----	----	----
17	----	----	----	1	5	13	19	22	22	19	14	6	1	----	----	----
24*	----	----	----	1	6	13	18	20	22	18	13	6	1	----	----	----
Means	0.3	3	9	19	29	39	46	48	48	44	37	27	16	8	3	0.3

*8-day means.

TABLE 16.—*Mean hourly totals of solar and sky radiation on a horizontal surface. Madison, Wis., 1936–39, inclusive (apparent solar time)*

Week beginning—	Gram-calories per square centimeter for hour ending—															
	A. M.								P. M.							
	5	6	7	8	9	10	11	Noon	1	2	3	4	5	6	7	8
Jan. 1	----	----	----	----	3	9	16	20	20	17	13	6	1	----	----	----
8	----	----	----	----	5	11	17	20	20	18	16	6	1	----	----	----
15	----	----	----	1	5	12	17	21	23	20	16	7	1	----	----	----
22	----	----	----	2	10	20	28	34	34	28	21	11	2	----	----	----
29	----	----	----	2	9	19	27	32	33	28	20	12	3	----	----	----
Feb. 5	----	----	----	3	11	20	28	30	30	27	21	11	4	----	----	----
12	----	----	----	4	15	25	34	36	37	32	24	14	5	----	----	----
19	----	----	----	6	17	28	37	40	39	40	26	15	6	1	----	----
26	----	----	1	7	14	27	32	35	36	32	28	18	8	1	----	----
Mar. 5	----	----	1	9	22	35	44	49	47	48	35	23	11	2	----	----
12	----	----	2	12	24	37	46	51	50	45	36	26	13	3	----	----
19	----	----	3	12	23	35	43	47	46	45	40	26	14	4	----	----
26	----	----	5	17	30	43	50	52	50	51	42	30	17	6	----	----
Apr. 2	----	----	6	17	30	38	43	45	44	42	38	28	17	7	1	----
9	----	1	8	20	32	49	52	54	52	46	40	39	18	8	1	----
16	----	1	8	19	28	34	40	42	42	44	40	31	20	9	2	----
23	----	1	8	19	30	40	48	50	51	48	41	32	19	8	2	----
30	----	2	12	26	38	46	52	60	61	56	47	38	27	14	4	----
May 7	----	4	15	28	41	52	60	64	58	54	46	38	26	14	4	----
14	----	4	13	26	39	49	59	61	62	57	49	36	26	16	5	----
21	----	4	16	26	36	50	59	62	62	60	54	40	30	16	6	1
28	----	5	16	27	38	50	56	59	56	54	51	43	33	20	8	1
June 4	1	7	18	31	43	53	61	66	60	56	48	40	26	18	7	2
11	1	6	17	29	42	54	64	62	64	59	52	40	30	20	8	1
18	1	8	20	33	46	56	63	66	69	63	55	43	32	19	7	1
25	1	6	17	30	42	53	63	62	62	58	51	38	28	16	7	1
July 2	1	6	18	32	42	54	66	70	72	67	58	47	32	19	7	1
9	----	6	19	34	47	61	64	69	70	66	57	46	30	20	8	1
16	----	5	16	31	45	55	66	67	68	63	53	41	28	17	6	1
23	----	6	17	31	44	56	60	70	72	63	52	41	30	18	6	----
30	----	4	17	30	43	54	63	67	68	63	52	40	30	17	4	----
Aug. 6	----	3	14	26	39	48	56	63	58	58	50	38	26	13	4	----
13	----	2	14	25	39	48	56	60	58	52	46	36	24	12	3	----
20	----	1	10	24	37	49	56	60	54	51	44	34	22	10	2	----
27	----	1	8	21	34	46	55	51	58	52	46	33	20	8	1	----
Sept. 3	----	----	6	17	28	37	44	51	53	48	38	29	16	6	1	----
10	----	----	5	17	27	34	40	46	45	43	42	26	14	6	----	----
17	----	----	4	16	30	42	50	54	54	50	39	29	16	4	----	----
24	----	----	2	12	23	33	41	45	45	41	33	22	12	3	----	----
Oct. 1	----	----	2	10	20	30	38	42	42	40	38	22	10	2	----	----
8	----	----	1	8	17	26	42	36	37	36	27	19	9	1	----	----
15	----	----	----	5	18	25	32	37	36	30	27	16	6	1	----	----
22	----	----	----	4	15	26	33	38	37	35	23	16	6	----	----	----
29	----	----	----	3	12	20	29	32	33	29	23	13	4	----	----	----
Nov. 5	----	----	----	2	11	23	33	37	35	31	24	12	3	----	----	----
12	----	----	----	2	10	20	29	30	34	32	22	12	2	----	----	----
19	----	----	----	1	8	16	22	26	27	23	16	9	2	----	----	----
26	----	----	----	1	6	14	22	23	27	20	15	7	1	----	----	----
Dec. 3	----	----	----	----	4	11	18	21	20	17	12	6	1	----	----	----
10	----	----	----	----	6	14	20	24	24	20	14	6	1	----	----	----
17	----	----	----	----	4	12	19	22	22	19	14	5	1	----	----	----
24*	----	----	----	----	4	11	19	23	22	20	16	7	1	----	----	----
Means	0.1	2	7	15	25	35	43	46	46	42	35	25	15	7	2	0.2

*8-day means.

TABLE 17.—*Mean hourly totals of solar and sky radiation on a horizontal surface. Friday Harbor, Wash., 1936–39, inclusive (apparent solar time)*

Week beginning—	Gram-calories per square centimeter for hour ending—															
	A. M.								P. M.							
	5	6	7	8	9	10	11	Noon	1	2	3	4	5	6	7	8
Jan. 1	----	----	----	----	3	8	12	17	16	13	8	4	----	----	----	----
8	----	----	----	----	2	6	11	12	15	15	11	3	----	----	----	----
15	----	----	----	----	3	8	14	15	17	16	13	6	1	----	----	----
22	----	----	----	----	4	11	16	18	19	16	15	6	2	----	----	----
29	----	----	----	----	5	11	17	22	22	21	16	10	3	----	----	----
Feb. 5	----	----	----	1	4	12	16	22	28	20	14	9	3	----	----	----
12	----	----	----	1	8	17	25	29	32	30	23	13	5	1	----	----
19	----	----	----	3	10	18	23	28	35	23	28	12	6	1	----	----
26	----	----	----	5	13	21	32	40	40	37	31	20	9	2	----	----
Mar. 5	----	----	1	6	16	24	34	38	33	26	28	21	12	3	----	----
12	----	----	1	7	14	24	30	33	34	33	26	18	11	3	----	----
19	----	----	3	13	21	30	36	40	24	39	33	26	15	5	----	----
26	----	----	5	14	26	36	47	50	49	46	40	29	18	8	1	----
Apr. 1	----	----	6	15	26	38	44	53	55	48	34	27	15	6	1	----
9	----	1	6	13	22	30	41	46	46	43	36	29	18	8	2	----
16	----	2	11	20	34	48	52	56	53	54	49	39	28	11	2	----
23	----	2	10	26	38	48	57	57	58	54	48	39	24	12	4	----
30	----	4	16	29	39	49	52	59	61	59	54	38	26	16	5	----
May 7	1	6	17	28	44	52	60	62	60	57	52	40	26	16	6	----
14	1	8	19	32	46	56	62	65	68	62	54	42	30	17	6	1
21	3	10	21	38	47	58	62	69	66	61	54	43	30	17	6	1
28	2	8	18	28	41	49	54	56	60	58	56	44	32	20	8	1
June 4	2	9	20	31	43	51	60	70	70	68	61	48	35	22	9	2
11	2	8	16	25	36	42	48	53	52	49	43	34	27	17	8	2
18	2	8	20	30	40	53	59	62	66	61	52	45	34	20	10	2
25	2	9	20	33	48	59	66	70	70	64	59	47	35	23	11	2
July 2	2	6	16	28	40	52	62	64	62	56	50	42	33	19	10	2
9	2	8	22	37	51	61	68	72	73	69	63	51	37	24	10	2
16	1	8	31	39	50	64	72	78	76	73	66	53	38	23	9	2
23	1	8	21	35	54	63	70	74	74	69	62	50	36	21	9	1
30	----	5	16	34	48	60	70	76	74	72	65	52	36	22	8	1
Aug. 6	----	4	14	24	39	50	60	64	66	62	55	44	32	18	6	----
13	----	3	12	25	38	52	62	64	69	66	60	48	32	16	4	----
20	----	2	11	22	34	42	52	57	59	54	49	37	26	12	2	----
27	----	1	8	19	31	42	52	54	53	48	44	32	20	8	2	----
Sept. 3	----	1	7	18	31	46	54	60	59	56	46	33	20	8	1	----
10	----	----	6	17	30	41	52	56	55	51	42	30	17	5	----	----
17	----	----	3	12	20	31	37	46	47	41	35	24	13	3	----	----
24	----	----	2	12	17	26	32	39	40	39	32	21	10	2	----	----
Oct. 1	----	----	2	8	16	24	34	38	42	37	29	18	8	1	----	----
8	----	----	1	8	18	28	32	36	37	33	25	15	6	----	----	----
15	----	----	1	7	16	26	34	39	36	29	21	12	4	----	----	----
22	----	----	----	4	11	15	22	22	23	20	15	10	2	----	----	----
29	----	----	----	2	8	14	19	20	23	20	14	7	2	----	----	----
Nov. 5	----	----	----	2	7	12	16	18	17	16	13	6	1	----	----	----
12	----	----	----	1	6	11	14	16	16	12	7	3	----	----	----	----
19	----	----	----	1	6	14	19	21	20	17	11	4	----	----	----	----
26	----	----	----	----	4	10	16	18	18	13	8	3	----	----	----	----
Dec. 3	----	----	----	----	3	8	12	14	15	11	6	2	----	----	----	----
10	----	----	----	----	3	9	13	20	19	16	10	3	----	----	----	----
17	----	----	----	----	3	7	10	15	12	11	8	2	----	----	----	----
24*	----	----	----	----	2	6	10	13	16	9	5	3	----	----	----	----
Means	0.4	2	7	14	23	32	39	43	44	40	34	25	16	8	3	0.4

*8-day means.

TABLE 18.—*Mean hourly totals of solar and sky radiation on a horizontal surface, Fairbanks, Alaska, 1936–39, inclusive (apparent solar time)*

Week beginning—	Gram-calories per square centimeter for hour ending																			
	A. M.										P. M.									
	3	4	5	6	7	8	9	10	11	Noon	1	2	3	4	5	6	7	8	9	10
Jan. 1	---	---	---	---	---	---	---	---	1	2	2	1	---	---	---	---	---	---	---	---
8	---	---	---	---	---	---	---	---	2	4	4	2	---	---	---	---	---	---	---	---
15	---	---	---	---	---	---	---	---	2	3	4	2	---	---	---	---	---	---	---	---
22	---	---	---	---	---	---	---	2	5	8	9	6	3	---	---	---	---	---	---	---
29	---	---	---	---	---	---	---	3	7	11	12	10	6	---	---	---	---	---	---	---
Feb. 5	---	---	---	---	---	---	1	6	11	11	14	12	8	3	---	---	---	---	---	---
12	---	---	---	---	---	---	2	7	11	44	14	13	9	3	---	---	---	---	---	---
19	---	---	---	---	---	---	4	8	12	15	16	13	9	5	---	---	---	---	---	---
26	---	---	---	---	---	3	9	15	20	25	24	21	19	11	3	---	---	---	---	---
Mar. 5	---	---	---	---	---	4	10	16	22	25	25	22	16	10	4	---	---	---	---	---
12	---	---	---	---	2	7	15	25	29	34	34	32	26	18	9	2	---	---	---	---
19	---	---	---	---	3	8	16	24	30	31	32	28	22	16	9	3	---	---	---	---
26	---	---	---	1	5	13	22	29	36	40	40	38	33	25	15	6	1	---	---	---
Apr. 2	---	---	---	2	8	16	25	43	40	44	46	44	38	29	19	9	2	---	---	---
9	---	---	---	3	9	17	25	34	42	46	45	42	46	28	19	10	4	---	---	---
16	---	---	---	3	8	15	22	29	35	40	40	40	47	24	16	8	2	---	---	---
23	---	---	2	5	13	22	29	36	42	47	48	44	40	34	24	18	8	2	---	---
30	---	---	4	9	17	23	32	39	45	46	47	41	35	29	21	14	7	3	---	---
May 7	---	---	3	8	16	25	34	43	48	52	51	48	38	33	26	16	10	5	---	---
14	---	1	3	10	18	28	37	44	48	52	49	47	42	33	29	19	12	5	1	---
21	---	2	5	10	17	25	34	40	46	50	46	36	37	35	26	17	10	6	2	---
28	---	1	5	10	16	23	33	42	47	49	48	44	37	27	26	19	12	9	4	---
June 4	1	2	6	14	21	27	44	41	46	47	49	46	43	38	32	23	16	8	3	1
11	1	3	6	11	18	26	45	44	49	52	52	50	44	39	31	24	16	9	4	2
18	1	2	6	12	20	26	35	41	45	50	48	45	40	36	28	23	16	9	4	1
25	1	3	6	12	18	25	32	40	45	46	46	45	40	32	26	20	13	8	4	1
July 2	---	2	6	11	18	24	30	36	40	46	45	44	40	42	30	23	14	8	3	---
9	---	2	5	11	17	23	29	36	40	45	46	42	43	33	27	20	12	7	3	---
16	---	2	5	11	19	29	34	38	44	46	49	50	40	35	28	20	12	6	2	---
23	---	1	4	9	16	24	31	36	44	47	47	45	40	34	27	18	12	6	2	---
30	---	1	3	8	14	21	29	36	39	42	42	41	36	30	24	16	9	4	1	---
Aug. 6	---	---	2	6	12	18	25	31	40	39	45	36	36	29	22	14	7	2	---	---
13	---	---	1	5	10	14	20	28	32	34	32	32	30	24	17	11	5	1	---	---
20	---	---	1	3	7	12	16	22	23	23	23	21	23	18	15	8	4	1	---	---
27	---	---	---	2	5	10	18	23	26	25	31	28	24	19	13	6	2	---	---	---
Sept. 3	---	---	---	1	4	10	14	19	25	26	26	24	21	17	10	6	1	---	---	---
10	---	---	---	---	3	8	14	18	25	30	28	25	20	14	9	3	---	---	---	---
17	---	---	---	---	2	7	14	20	24	26	27	24	21	16	9	3	---	---	---	---
24	---	---	---	---	1	4	9	14	20	23	21	18	15	10	5	1	---	---	---	---
Oct. 1	---	---	---	---	---	3	8	13	18	20	22	20	16	10	4	---	---	---	---	---
8	---	---	---	---	---	2	7	12	16	20	20	17	12	8	2	---	---	---	---	---
15	---	---	---	---	---	---	4	9	13	16	14	14	8	4	---	---	---	---	---	---
22	---	---	---	---	---	---	2	6	9	14	14	10	7	3	---	---	---	---	---	---
29	---	---	---	---	---	---	1	4	6	8	8	8	5	2	---	---	---	---	---	---
Nov. 5	---	---	---	---	---	---	1	4	8	10	10	8	4	1	---	---	---	---	---	---
12	---	---	---	---	---	---	---	2	5	6	6	5	2	---	---	---	---	---	---	---
19	---	---	---	---	---	---	---	1	3	4	5	3	1	---	---	---	---	---	---	---
26	---	---	---	---	---	---	---	1	2	4	4	3	1	---	---	---	---	---	---	---
Dec. 3	---	---	---	---	---	---	---	---	2	4	4	2	---	---	---	---	---	---	---	---
10	---	---	---	---	---	---	---	---	1	2	2	1	---	---	---	---	---	---	---	---
17	---	---	---	---	---	---	---	---	1	2	2	1	---	---	---	---	---	---	---	---
24*	---	---	---	---	---	---	---	---	1	3	3	1	---	---	---	---	---	---	---	---
Means	0.1	0.4	1	3	6	10	16	20	24	27	27	25	22	16	12	7	4	2	0.6	0.1

* 8-day means.

TABLE 19.—*Mean hourly totals of solar and sky radiation on a horizontal surface, composite of 10 stations (Lincoln, Washington, New York, Blue Hill, Fresno, Riverside, Friday Harbor, Madison, Chicago, and La Jolla) in continental United States (apparent solar time)*

Week beginning—	Gram-calories per square centimeter for hour ending—																
	A. M.								P. M.								
	5	6	7	8	9	10	11	Noon	1	2	3	4	5	6	7	8
Jan. 1	---	---	---	1.3	7.0	15.8	21.6	26.0	25.6	22.5	15.2	8.3	1.5	---	---	---
8	---	---	---	1.3	7.6	16.1	22.9	26.7	26.7	23.9	17.4	8.3	1.6	---	---	---
15	---	---	---	1.7	8.4	16.8	23.4	26.7	28.2	24.8	18.6	9.7	2.3	---	---	---
22	---	---	---	2.4	11.3	21.3	28.7	33.0	33.3	29.0	22.0	12.4	3.0	---	---	---
29	---	---	---	3.0	11.1	21.1	28.0	31.3	31.5	28.4	22.1	12.6	3.9	---	---	---
Feb. 5	---	---	---	4.0	12.6	22.3	30.2	34.9	35.5	30.7	23.8	13.3	4.8	---	---	---
12	---	---	---	5.0	14.2	24.2	31.5	34.8	35.6	32.5	25.0	15.5	5.8	---	---	---
19	---	---	T	6.9	18.4	28.9	35.1	41.1	41.4	36.8	30.0	18.1	7.6	T	---	---
26	---	---	1.2	9.8	20.5	31.9	41.1	46.2	46.2	41.4	37.7	22.2	10.1	1.5	---	---
Mar. 5	---	---	1.5	9.4	22.5	33.3	42.9	46.8	45.4	41.9	33.9	23.4	11.9	2.0	---	---
12	---	---	2.2	11.5	22.3	33.7	41.4	45.9	45.1	40.7	33.7	23.5	12.1	2.7	---	---
19	---	---	3.4	13.7	25.4	36.6	45.1	49.5	50.3	45.6	38.3	27.0	15.2	4.3	---	---
26	---	---	5.2	17.0	29.4	40.1	48.4	52.7	52.4	48.2	40.2	29.8	16.6	5.2	---	---
Apr. 2	---	T	6.5	18.1	30.6	39.5	47.5	53.2	52.9	48.1	39.4	28.4	17.2	6.1	T	---
9	---	0.8	7.1	18.5	30.7	42.6	50.8	54.5	54.1	49.4	41.3	32.1	19.2	7.3	0.8	---
16	---	1.3	9.1	20.5	33.3	44.4	52.0	56.2	56.3	52.5	45.7	34.8	21.9	9.2	1.5	---
23	---	1.9	10.1	22.9	35.0	46.2	54.8	58.7	59.6	54.7	46.6	35.5	22.0	10.0	1.9	---
30	---	2.8	12.5	26.5	40.1	49.5	59.1	64.7	64.7	59.6	51.0	39.8	26.0	13.0	2.9	---
May 7	---	3.2	13.4	25.5	38.8	49.5	58.8	62.7	61.4	57.8	49.8	38.8	25.5	13.2	3.3	---
14	---	4.3	14.0	26.9	39.6	51.0	59.0	62.0	63.6	58.2	50.7	40.1	26.8	14.0	4.0	---
21	T	4.8	15.8	28.9	40.9	52.3	60.5	64.5	64.2	61.4	53.7	42.8	28.9	15.4	4.6	T
28	T	5.0	15.8	28.6	41.6	53.4	60.5	64.9	65.6	60.8	53.7	42.7	30.0	16.8	5.4	T
June 4	0.4	5.6	16.7	30.0	43.0	54.4	62.8	69.1	67.7	63.6	54.4	43.8	30.8	18.0	5.7	0.6
11	.6	5.3	15.5	28.0	42.2	52.3	59.9	63.4	63.8	60.6	52.6	41.8	28.9	16.6	5.8	.6
18	.6	5.9	17.4	29.7	42.8	54.1	61.6	66.2	66.5	62.2	53.9	43.4	32.4	17.7	6.2	.7
25	.7	5.4	15.9	28.3	41.4	53.1	61.0	65.2	64.3	60.1	52.5	42.1	29.5	16.9	5.9	.7
July 2	.7	5.4	17.0	32.3	44.0	55.8	65.0	69.2	69.4	65.2	56.0	43.3	31.9	17.8	5.9	.7
9	.3	5.3	16.6	30.4	43.8	55.6	61.0	67.8	67.8	63.7	55.1	43.0	29.6	16.6	5.6	.4
16	T	4.8	16.5	29.0	42.2	54.7	60.7	66.3	65.6	61.5	54.9	42.3	28.8	15.6	5.1	T
23	T	4.0	14.5	27.0	40.2	51.2	59.4	63.8	65.5	56.5	51.9	40.7	27.7	14.7	4.3	T
30	---	3.2	13.8	27.3	41.0	52.8	61.6	64.6	66.3	61.6	52.6	41.7	28.7	14.8	3.8	---
Aug. 6	---	2.7	11.7	23.4	36.9	49.2	57.9	63.0	63.3	59.1	50.5	39.9	26.4	12.8	2.8	---
13	---	1.9	10.8	23.0	36.6	48.6	58.2	62.6	63.2	58.8	53.1	40.0	25.3	11.8	2.3	---
20	---	1.5	10.2	22.9	36.5	48.8	56.3	61.0	61.1	56.0	47.8	36.5	23.7	9.9	1.7	---
27	---	1.0	8.3	20.5	34.2	46.2	54.5	58.4	58.4	52.9	44.9	34.2	21.2	8.0	1.4	---
Sept. 3	---	.6	7.3	21.2	33.5	45.5	54.2	59.6	59.3	54.9	44.7	33.3	19.3	7.1	.7	---
10	---	T	5.8	17.6	30.1	40.5	50.1	55.6	54.5	49.0	41.1	28.8	16.2	5.2	T	---
17	---	---	4.1	16.5	29.0	40.5	48.4	53.8	52.9	47.2	38.9	27.6	14.8	4.1	---	---
24	---	---	3.2	13.4	24.7	34.1	43.5	48.7	49.1	43.7	36.1	24.7	12.4	2.9	---	---
Oct. 1	---	---	2.5	11.8	24.5	34.7	43.2	48.3	48.5	43.5	36.7	23.3	11.3	1.8	---	---
8	---	---	1.8	11.2	22.5	34.1	42.8	44.9	46.0	41.6	33.6	22.2	10.2	2.1	---	---
15	---	---	1.4	9.2	21.9	31.8	40.5	41.0	43.9	38.9	29.6	18.3	7.0	.7	---	---
22	---	---	.4	7.0	18.0	27.4	35.1	39.0	39.3	35.6	26.7	16.8	5.9	.2	---	---
29	---	---	---	5.4	15.2	25.3	33.3	36.4	36.6	32.6	24.8	15.0	4.7	---	---	---
Nov. 5	---	---	---	4.0	13.5	23.3	31.6	35.8	35.5	32.5	24.8	13.9	4.3	---	---	---
12	---	---	---	3.9	13.3	23.1	30.3	33.7	33.6	28.9	20.7	11.1	2.2	---	---	---
19	---	---	---	3.1	11.7	21.1	27.7	31.2	30.9	26.4	18.9	9.8	2.2	---	---	---
26	---	---	---	2.1	10.1	19.6	26.9	30.2	30.3	25.5	17.8	9.1	1.6	---	---	---
Dec. 3	---	---	---	1.8	8.6	15.8	22.4	26.4	25.7	22.1	16.0	7.7	1.4	---	---	---
10	---	---	---	1.3	7.2	14.9	21.8	25.7	25.5	22.7	15.3	7.4	1.0	---	---	---
17	---	---	---	1.3	7.4	14.8	21.5	25.4	24.7	21.4	15.0	6.8	.9	---	---	---
24*	---	---	---	1.4	7.7	15.8	22.6	26.7	26.0	22.5	15.7	7.8	1.3	---	---	---
Means	.1	1.5	6.3	15.1	26.2	36.7	44.6	48.9	48.9	44.6	37.0	26.4	15.3	6.5	1.6	.1

* 8-day means.

TABLE 20.—*Percentage departures of mean of maximum and minimum from annual mean*

Station	Latitude		Annual mean	Mean of maximum and minimum	Percentage of departures of mean maximum and minimum weeks from annual mean	Maximum	Minimum
	°	′					
Fairbanks	64	52	226	266.0	+17.7	526	6
Friday Harbor	48	32	331	373.5	+11.3	683	64
Madison	43	05	343	356.5	+3.9	598	105
Twin Falls	42	29	375	384.5	+2.5	651	118
Blue Hill	42	17	343	362.5	+5.7	608	117
Chicago	41	47	273	274.5	+0.5	476	73
Lincoln	40	50	376	378.5	+0.7	609	148
New York	40	46	304	328.5	+8.1	556	101
Washington	38	56	341	341.5	+0.1	557	126
Fresno	36	43	466	432.5	−7.2	733	132
Riverside	33	58	410	404.0	−1.5	604	204
La Jolla	32	50	416	413.0	−0.7	607	219
New Orleans	29	56	369	360.5	−2.3	542	179
Miami	25	41	392	399.5	+1.9	511	288
San Juan	18	28	520	497.0	−4.4	669	325

TABLE 21.—*Analysis of the isopleths*

Station	N. latitude	Maximum		Minimum		Symmetry	Average daily radiation	
		Noon. Week beginning—	Daily. Week beginning—	Noon. Week beginning—	Daily. Week beginning—		Gram-cal.	Departure from composite of continental United States
	° ′							*Percent*
San Juan	18 28	Feb. 26	Apr. 16	Jan. 1	Jan. 1	Very irregular; many crests	520	+44
Miami	25 41	Apr. 16	June 4	Sept. 23	Dec. 10, Dec. 24	Somewhat irregular; several crests	392	+9
New Orleans	29 56	June 11	June 18	Dec. 24	Dec. 24	Rather smooth	369	+2
La Jolla	32 50	Apr. 30	June 4	Dec. 10	Dec. 10	Fairly smooth; many crests	416	*+16
Riverside	33 58	June 11	June 11	do	do	Fairly smooth; few crests	410	*+14
Fresno	36 43	July 2	July 2	Dec. 17	Dec. 17	Very smooth; few crests	466	*+29
Washington	38 56	do	do	Dec. 10	Dec. 10	do	341	*−5
New York	40 46	do	do	Jan. 1	Jan. 1, Dec. 17	Irregular; many crests	304	*−16
Lincoln	40 50	do	do	Dec. 10	Dec. 10	Exceedingly smooth; only 1 crest	376	*+4
Chicago	41 47	July 9	do	Dec. 3	Dec. 3	Very smooth; few crests	273	*−24
Blue Hill	42 13	May 28, July 2	do	do	do	Rather irregular; many crests	343	*−5
Twin Falls	42 29	May 21, July 16	May 21	Dec. 24, Jan. 8	Dec. 24, Jan. 8	Very smooth; many crests	375	+4
Madison	43 05	July 2, July 23	July 9	Jan. 1, Jan. 8	Jan. 1	Fairly smooth	343	*−5
Friday Harbor	48 32	July 16	July 16	Dec. 17, Jan. 8	Dec. 24	Smooth; many crests	331	*−8
Fairbanks	64 52	June 11	June 11	Dec. 10, Dec. 17, Jan. 1	Dec. 10, Dec. 17, Jan. 1.	Irregular at noon; otherwise smooth	226	−33
Composite of 10 stations.	39 58	July 2	July 2	Dec. 17	Dec. 17	Very smooth	360	

*Stations included in the composite.

NOTES AND REVIEWS

Seventh Pacific Science Congress.—If world conditions permit, it is planned to hold the Seventh Pacific Science Congress at Manila in 1943, probably about November, under the auspices of the National Research Council of the Philippines. Father C. E. Deppermann, S. J., Assistant Director of the Philippine Weather Bureau, has been appointed Secretary for the section of meteorology and climatology.

Several symposia on subjects of general interest to the Pacific are being tentatively considered; and in addition, any papers contributing to the meteorology or climatology of the Pacific region will be welcomed.

The Secretary extends an invitation to American meteorologists and climatologists to attend this Congress and to contribute to the program. It is desired to make this Congress as representative of the whole Pacific region as possible, both north and south of the Equator. The Secretary will be glad to receive the names of those who plan to attend, titles of proposed papers, and suggestions as to symposia or other matters that may aid in making the Congress an outstanding success. Papers may be contributed even though the authors cannot attend in person.

METEOROLOGICAL AND CLIMATOLOGICAL DATA FOR APRIL 1941

[Climate and Crop Weather Division, J. B. KINCER in charge]

AEROLOGICAL OBSERVATIONS

By EARL C. THOM

Mean surface temperatures for April were above normal over nearly three-fourths of the country (chart I). Temperatures were below normal over western Texas, over most of the Plateau and Rocky Mountain region and, except for the coastal stations, over all of California, while temperatures were above normal over the rest of the country. An area including parts of three States, Arizona, Utah, and Nevada, had mean temperatures slightly more than 4° F. below normal while temperatures in the Great Lakes region were 6° to 8° above normal.

At 1,500 meters above sea level the 5 a. m. resultant winds were from directions to the south of normal over most of the country. The opposite turning from normal was noted, however, over Miami and El Paso, over most of the east central, the northeast and the upper Great Lake areas, as well as over parts of the north-central and northwestern sections. At the 3,000 m. level the directions of the 5 a. m. resultant wind were to the north of normal over most of the northeast and the northwest sections and to the south of normal elsewhere. A comparison could be made between the 5 p. m. resultant winds and the corresponding 5 a. m. normals for only about half of the stations of the country. The stations in the northeast and east-central portions of the country and most of those in the northwest and west-central areas reported 5 p. m. resultant directions to the north of the corresponding 5 a. m. normals for 5,000 meters while the opposite turning from these normals occurred at this level over the rest of the country.

At both the 1,500 m. and 3,000 m. levels the 5 a. m. resultant wind velocities were generally lower than normal. This negative departure was especially marked in the East Central States where the resultant velocities at these levels were from 4 to 6 m. p. s. below normal. At 5,000 meters most stations in the northern half of the country had 5 p. m. resultant velocities well below the corresponding 5 a. m. normals while the velocities to the south were generally above normal.

Except along the Gulf coast, the extreme Southeast and portions of the Northern Plateau region the 5 p. m. resultant winds were from directions to the south of the corresponding 5 a. m. resultants over the country generally, at the 1,500 m. level. This turning of the resultant winds to the southward during the day was generally true at 3,000 meters, there being only eight stations in the United States where the opposite shift in wind direction occurred.

At 1,500 meters the 5 p. m. resultant velocities were lower than the corresponding 5 a. m. normals over most stations in the eastern two-thirds of the country and were higher generally to the westward. Over the northern third of the country, the velocities of the 5 p. m. resultant winds