REPORT UAG - 16

WORLD DATA CENTER A

Upper Atmosphere Geophysics

TEMPORAL DEVELOPMENT OF THE GEOGRAPHICAL DISTRIBUTION OF AURORAL ABSORPTION FOR 30 SUBSTORM EVENTS IN EACH OF IQSY (1964 - 65) AND IASY (1969)

September 1971

WORLD DATA CENTER A

National Academy of Sciences

2101 Constitution Avenue, N. W. Washington, D. C. U.S.A., 20418

World Data Center A consists of the Coordination Office

and nine subcenters:

World Data Center A
Coordination Office
National Academy of Sciences
2101 Constitution Avenue, N.W.
Washington, D. C., U.S.A. 20418
Telephone (202) 961-1478

Solar and Interplanetary Phenomena, Ionospheric Phenomena, Flare-Associated Events, Aurora, Cosmic Rays, Airglow:
World Data Center A:
Upper Atmosphere Geophysics
National Oceanic and Atmospheric Administration
Boulder, Colorado, U.S.A. 80302
Telephone (303) 447-1000 Ext. 3381

Geomagnetism, Seismology and Gravity:
World Data Center A:
Geomagnetism, Seismology and Gravity
Environmental Data Service, NOAA
Boulder, Colorado, U.S.A. 80302
Telephone (303) 447-1000

Glaciology:
World Data Center A:
Glaciology
U. S. Geological Survey
1305 Tacoma Avenue South
Tacoma, Washington, U.S.A. 98402
Telephone (206) 383-2861 ext. 318

Longitude and Latitude:
World Data Center A:
Longitude and Latitude
U. S. Naval Observatory
Washington, D. C., U.S.A. 20390
Telephone (202) 698-8422

Meteorology (and Nuclear Radiation):
World Data Center A:
Meteorology
National Climatic Center
Federal Building
Asheville, North Carolina, U.S.A. 28801
Telephone (704) 254-0961

Oceanography:
World Data Center A:
Oceanography
National Oceanic and Atmospheric Administration
Rockville, Maryland, U.S.A. 20852
Telephone (202) 698-3753

Rockets and Satellites:
World Data Center A:
Rockets and Satellites
Goddard Space Flight Center
Code 601
Greenbelt, Maryland, U.S.A. 20771
Telephone (301) 982-6695

Tsunami:
World Data Center A:
Tsunami
National Oceanic and Atmospheric Administration
P. O. Box 3887
Honolulu, Hawaii, U.S.A. 96812
Telephone (808) 546-5698

Upper Mantle Project:
World Data Center A:
Upper Mantle Project
Lamont-Doherty Geological Observatory
Palisades, New York, U.S.A. 10964
Telephone (914) 359-2900 Ext. 209

Notes:

(1) World Data Centers conduct international exchange of geophysical observations in accordance with the principles set forth by the International Council of Scientific Unions. WDC-A is established in the United States under the auspices of the National Academy of Sciences.
(2) Communications regarding data interchange matters in general and World Data Center A as a whole should be addressed to: World Data Center A, Coordination Office (see address above).
(3) Inquiries and communications concerning data in specific disciplines should be addressed to the appropriate subcenter listed above.

WORLD DATA CENTER A

Upper Atmosphere Geophysics

REPORT UAG - 16

TEMPORAL DEVELOPMENT OF THE GEOGRAPHICAL DISTRIBUTION OF AURORAL ABSORPTION FOR 30 SUBSTORM EVENTS IN EACH OF IQSY (1964 - 65) AND IASY (1969)

by

Berkey, F.T., Geophysical Institute, Alaska, U.S.A.
Driatskiy, V.M., Arctic and Antarctic Research Inst., Leningrad, USSR
Henriksen, K., Auroral Observatory, Tromsö, Norway
Jelly, D.H., Communications Research Centre, Ottawa, Canada
Shchuka, T.I., Arctic and Antarctic Research Inst., Leningrad, USSR
Theander, A., Kiruna Geophysical Observatory, Kiruna, Sweden
Yliniemi, J., Department of Geophysics, University of Oulu, Finland

Prepared by World Data Center A, Upper Atmosphere Geophysics, NOAA, Boulder, Colorado and published by

U.S. DEPARTMENT OF COMMERCE
NATIONAL OCEANIC AND ATMOSPHERIC ADMINISTRATION

ENVIRONMENTAL DATA SERVICE
Asheville, North Carolina, USA 28801

SEPTEMBER 1971

SUBSCRIPTION PRICE: $9.00 a year; $2.50 additional for foreign mailing; single copy price varies.* Checks and money orders should be made payable to the Superintendent of Documents, and orders should specify the Catalog order number. Orders, remittances, and correspondence regarding subscriptions should be sent to the Superintendent of Documents, Government Printing Office, Washington, D.C. 20402.

*Price this issue $.70 (Catalog order number C55.220:16).

FOREWORD

The rich rewards of the global synoptic studies of geomagnetic and visual auroral data obtained during IGY and thereafter have clearly demonstrated the great value of synoptic investigations for resolving the dynamic aspects of large scale plasma phenomena in the magnetosphere. Such studies of the precipitation into the atmosphere of the high energy tail of the auroral particle spectrum covering the entire northern subauroral, auroral and polar cap regions were not possible during IGY because the riometer net did not cover these regions sufficiently well. In the IQSY there were 36 riometers and in IASY 44 riometers in operation covering fairly well the above-mentioned high latitude regions in both longitude and latitude. This was the basis for the organization of an international cooperative investigation on a global scale of the dynamic aspects of auroral absorption events, which was organized during an ESRO Colloquium on substorm events held in Kiruna, Sweden, on 18-20 March 1969 (Proceedings in ESRO Report SP-38 by J. Ortner and A. F. Moore, September 1969). All countries with territories in the above-mentioned regions, except Iceland, were represented at the Kiruna colloquium and because of the good cooperative spirit which all participants demonstrated we have succeeded in agreeing on both the main philosophy and the detailed mechanisms of the cooperation.

Cooperation has now reached the stage where 30 auroral absorption events during each of the IQSY and IASY periods have been analyzed in great detail by 6 groups. 369 synoptic maps have been produced for IQSY and 336 for IASY, which show fairly clearly the temporal development of the high-energy auroral particle precipitation over the northern hemisphere. All these maps are published in this report in order to make them available to the scientific community for use in connection with related observations and measurements of other kinds. The collaborating groups who have prepared these data have proceeded to the scientific analysis. At least one joint scientific paper will be published and different aspects may be carried further by individuals or smaller groups. By covering solar-activity minimum as well as maximum years, we hope to be able to arrive at a good knowledge and understanding of the dynamics of the auroral particle precipitation in the approximate energy range 10-100 kev during substorms.

It is a great pleasure to acknowledge once again the good cooperation of scientists representing all longitudes along the auroral zone without which this work would not have been possible. We are grateful to Mr. F. C. Cowley (Boulder), Dr. P. Stauning (Copenhagen), Dr. G. M. Courtier (Slough) and Dr. Th. Saemundsen (Leirvogur), who have supplied riometer data although they have not been able to work actively on the project. We have also benefited from the Thule riometer data published in the AFCRL Geophysics and Space Data Bulletin. In addition to those who have carried out the work, and whose names therefore appear on this data publication, valuable assistance of various kinds has been given by Dr. S. -I. Akasofu, Dr. O. Holt and Dr. J. Kangas. I wish, finally, to express our gratitude to Mr. A. H. Shapley and Miss J. Virginia Lincoln for offering us the possibility of having this report published by World Data Center A, Upper Atmosphere Geophysics.

The machine plotting of maps made by Berkey was made possible by the National Science Foundation Grant No. GA-1661.

The Swedish contribution has been supported in part by the Swedish National Science Research Council.

Bengt Hultqvist
Coordinator
Kiruna, February 25, 1970

TABLE OF CONTENTS

	Page
Foreword	i
Description of Data Selection and Reduction Procedures	
Selection of Events	1
Riometer Stations	1
Distribution of Data Reduction Work and Data Exchange	1
Data Reduction Procedure	1
List of Analyzed Auroral Absorption Events in IQSY	2
List of Analyzed Auroral Absorption Events in IASY	3
List of Riometer Stations	5
Map with Location of Riometer Stations	7
Plotted Maps	
IQSY	8
IASY	67

TEMPORAL DEVELOPMENT OF THE GEOGRAPHICAL DISTRIBUTION OF AURORAL ABSORPTION FOR 30 SUBSTORM EVENTS IN EACH OF IQSY (1964-65) AND IASY (1969)

by

Berkey, F.T., Geophysical Institute, Alaska, U.S.A.
Driatskiy, V.M., Arctic and Antarctic Research Inst., Leningrad, USSR
Henriksen, K., Auroral Observatory, Tromsö, Norway
Jelly, D.H., Communications Research Centre, Ottawa, Canada
Shchuka, T.I., Arctic and Antarctic Research Inst., Leningrad, USSR
Theander, A., Kiruna Geophysical Observatory, Kiruna, Sweden
Yliniemi, J., Department of Geophysics, University of Oulu, Finland

DESCRIPTION OF DATA SELECTION AND REDUCTION PROCEDURES

Selection of Events

From a list of some 50 auroral absorption events in the IQSY and some 80 events in the IASY, proposed by the participating scientists, 30 events for each of the two periods, fairly equally distributed in Universal Time, were selected on the basis of the following criteria applied to the riometer records from the night side of the earth:

(i) The riometer record was undisturbed for one hour before the onset of the substorm.
(ii) The onset was abrupt with a rate of increase of absorption of at least 1 dB per 5 minutes.
(iii) The duration of the absorption event was greater than half an hour.
(iv) The absorption exceeded 1 dB for more than 5 minutes.

Events superimposed on Polar Cap Absorption and Sudden Commencement Absorption have not been included in the investigation.

In spite of condition (i) it was found that in some events reminiscenses of earlier substorm events could be seen on the day side of the earth at the time of start of selected events on the night side. However, these last traces of earlier substorms have been found to disappear quickly and are not included in the investigation of the selected events listed in Tables 1 and 2. A type of long-lasting absorption with a duration of up to a full day and night sometimes, has been observed on some occasions in a limited geographical region. It seems to be stable in Universal Time rather than in local time. This phenomenon has evidently nothing to do with the substorm effects and has been subtracted out of the data. Other types of non-substorm absorption which have not been included in the investigation are short spikes, rapid pulsations and small fluctuations before the real onset (often referred to as pre-events). On some occasions the early phase of a new subsubstorm has been discernible on the night side towards the end of the substorm. This absorption has been excluded, when it has been quite clear that it has been part of a different substorm.

Riometer Stations

Records from 36 riometer stations operated during IQSY and 44 during IASY constituted the basis for the investigation. In Table 3 these stations are listed together with their geographic and corrected geomagnetic coordinates, frequency, antenna pointing direction and type of antenna. Figure 1 shows a map on which the locations of all stations are marked.

Distribution of Data Reduction Work and Data Exchange

The basis for the distribution of the data reduction work between the 6 cooperating groups was the local time of the riometers at the onsets of the events. Events were allotted to the group whose riometers were in the midnight sector when the substorms started. The distribution between the various research workers is shown in Tables 1 and 2. Copies of the riometer records, covering a period of at least 1 hour before onset to 4 hours after, were sent to the research worker in charge of the data reduction for the event in question. In addition to the copies of the riometer records, information about timing accuracy (maximum timing error), calibration values and quiet day curves were distributed.

Data Reduction Procedure

No corrections for differences in frequency, viewing direction and beam width have been applied to the measured absorption values. As can be seen in Table 2 all riometers employed were working at frequencies between 27.6 and 32.0 MHz. The differences in absorption values because of frequency differences are, therefore, only of the order of 10% and can be neglected in the production of the synoptic maps. The deviations of the isolines because of differences in pointing direction and beam dimensions are also small. However, differences in frequency, direction of antenna orientations, calibrations and timing technique among the various stations may together easily give rise to differences in absorption of the order of 0.3 dB.

The large majority of these isoline maps have been drawn manually, employing linear spatial interpolation between nearby stations and linear temporal interpolation between sequential maps. When the riometers were far apart - as in the North-Atlantic area for the IQSY events or western Canada for IASY events - the corrected geomagnetic latitude curves were used as guide lines in drawing the isocurves. The isolines have in general been dotted when no data from within the main zone of auroral absorption have been available over a longitude sector of 60° or more. However, all riometer stations which have delivered data for an event are marked on the first map in the series, so that reader/user can see for himself where long extrapolations have been made in connecting isolines of different regions with good nets of riometers. Fairly good support for the extrapolation over e.g. the North-Atlantic region in the IQSY maps is, in fact, provided by the IASY events for which riometers were available both on Iceland and Greenland and in Scotland.

If data is missing for a certain station on a certain map, this is marked with the letter C close to the station. Fast pulsations, which have sometimes occurred, have been smoothed out and this is marked with the letter P close to the actual station.

In some cases the amount of information is insufficient for an non-arbitrary drawing of the isolines. For example, when a low value appears at the border of the absorption zone, it is disputable whether two disconnected branches of the isolines should be the result, or whether the lines should only be moved somewhat in latitude from the low value station but still extend in the approximate E-W direction. Dotted lines have been used wherever the data were not convincing in some area.

Ten events, reduced by Berkey have been plotted by means of computer. The program used a weighted least square fit between data points, which means that a value was calculated for every 0.25 inch interval over the whole map. On that basis isolines were drawn for, in general, 0.5 dB, 1.0 dB, 1.5 dB also. The contours for integer dB values are shown on the maps as heavy lines. The corrected geomagnetic latitudes are shown as circles on the machine plotted maps, since these are not superimposed on geographic maps. The machine plotted maps are somewhat different from the hand drawn ones in that the computer did not use time and space smoothing to the same extent as in manually produced maps. However, the IASY computer-generated maps incorporate a modification intended to reduce the undesirable effect introduced by linear interpolation between data points in the computer program. On these maps, when data existed at any of 5 stations (Cape Schmidt, Churchill, Kotzebue, Leivogur, or Tixie) the absorption magnitude was used to calculate the absorption at any other latitude along the meridian of the station. Three additional data points (at 60°, 70° and 80°) were derived assuming a latitudinal distribution of the form :

$$A(dB) = A_o \exp[-(\phi - 65.4°)^2/32]$$

where ϕ is the corrected geomagnetic latitude and A_o is a normalizing factor derived from the absorption recorded at the station in question.

On each map the border line between day and night hemispheres at an altitude of 80 km is indicated. As a rule one map for every 15 minutes of each event has been included in this report. However, in some cases, when the rate of change has been particularly rapid, shorter time intervals have been used. It should be remembered that the density of the riometer net is far too low to permit any study of the fine structure of the auroral absorption, such as strong latitudinal or longitudinal gradients. The synoptic map series are of value mainly for the investigation of the large scale temporal development of the spatial distribution of energetic particle precipitation. Derivation of expansion velocities from the low-level absorption (0.3) contours is not advisable in view of what has been mentioned above.

Table 1

LIST OF ANALYZED AURORAL ABSORPTION EVENTS IN IQSY

Data	Year	Time in UT	Data reduced by
Jan 25	1964	0545 - 0830	Miss D.H. Jelly
Jan 25	1964	2000 - 2145	Dr. V.M. Driatskiy and Dr. T.I. Shchuka
Feb 6	1964	0500 - 0745	Mr. K. Henriksen
Feb 8	1964	0015 - 0300	Mr. A. Theander
Feb 25	1964	1845 - 2100	Dr. V.M. Driatskiy and Dr. T.I. Shchuka
Apr 17	1964	0115 - 0400	Mr. A. Theander
May 15	1964	0300 - 0545	Mr. K. Henriksen
May 18	1964	0530 - 0900	Miss D.H. Jelly

Table 1 (continued)

LIST OF ANALYZED AURORAL ABSORPTION EVENTS IN IQSY

Data	Year	Time in UT	Data reduced by
Aug 26	1964	0545 - 0830	Miss D.H. Jelly
Oct 9	1964	0755 - 1035	Mr. T. Berkey
Oct 18	1964	2224 - 0104	Mr. J. Yliniemi
Dec 1	1964	0745 - 1030	Miss D.H. Jelly
Dec 16	1964	1300 - 1515	Dr. V.M. Driatskiy and Dr. T.I. Shchuka
Dec 17	1964	0045 - 0330	Mr. A. Theander
Jan 8	1965	0015 - 0300	Mr. A. Theander
Jan 14	1965	1120 - 1335	Mr. T. Berkey
Feb 8	1965	2030 - 2300	Mr. J. Yliniemi
Feb 21	1965	0430 - 0630	Mr. K. Henriksen
Mar 4	1965	0430 - 0700	Mr. K. Henriksen
Mar 22	1965	2118 - 0003	Mr. J. Yliniemi
Mar 25	1965	1915 - 2100	Dr. V.M. Driatskiy and Dr. T.I. Shchuka
Mar 26	1965	0755 - 0950	Mr. T. Berkey
Apr 9	1965	0245 - 0515	Mr. K. Henriksen
May 12	1965	0215 - 0500	Mr. A. Theander
Jul 28	1965	0515 - 0900	Miss D.H. Jelly
Aug 2	1965	0815 - 0915	Mr. T. Berkey
Sep 12	1965	2355 - 0200	Mr. J. Yliniemi
Nov 7	1965	0950 - 1150	Mr. T. Berkey
Nov 13	1965	2057 - 2257	Mr. J. Yliniemi
Dec 18	1965	1640 - 1845	Dr. V.M. Driatskiy and Dr. T.I. Shchuka

Table 2

LIST OF ANALYZED AURORAL ABSORPTION EVENTS IN IASY

Date	Year	Time in UT	Data reduced by
Jan 15	1969	1800 - 2045	Dr. V.M. Driatskiy and Dr. T.I. Shchuka
Jan 17	1969	1700 - 1955	Mr. T. Berkey
Jan 25	1969	2345 - 0215	Mr. J. Yliniemi
Feb 2	1969	1800 - 1955	Mr. T. Berkey
Feb 3	1969	0615 - 1030	Miss D.H. Jelly
Feb 3	1969	1800 - 2315	Dr. V.M. Driatskiy and Dr. T.I. Shchuka
Feb 15	1969	0245 - 0530	Mr. K. Henriksen
Feb 28	1969	2130 - 0115	Dr. V.M. Driatskiy and Dr. T.I. Shchuka
Mar 7	1969	2337 - 0157	Mr. J. Yliniemi
Mar 13	1969	0115 - 0400	Mr. K. Henriksen
Mar 18	1969	0330 - 0615	Mr. K. Henriksen
Mar 30	1969	1740 - 1855	Mr. T. Berkey
Mar 31	1969	1640 - 1955	Mr. T. Berkey

Table 2 (continued)

LIST OF ANALYZED AURORAL ABSORPTION EVENTS IN IASY

Data	Year	Time in UT	Data reduced by
Apr 1	1969	1830 - 2115	Dr. V.M. Driatskiy and Dr. T.I. Shchuka
Apr 21	1969	2247 - 0132	Mr. J. Yliniemi
May 3	1969	0430 - 0715	Mr. A. Theander
May 14	1969	1915 - 2215	Dr. V.M. Driatskiy and Dr. T.I. Shchuka
May 17	1969	0615 - 0900	Miss D.H. Jelly
May 24	1969	2245 - 0130	Mr. A. Theander
Jul 14	1969	0400 - 0645	Mr. A. Theander
Jul 26	1969	2315 - 0200	Mr. A. Theander
Aug 4	1969	0915 - 1330	Miss D.H. Jelly
Sep 6	1969	0515 - 0900	Miss D.H. Jelly
Sep 6	1969	1015 - 1400	Miss D.H. Jelly
Sep 8	1969	0230 - 0515	Mr. K. Henriksen
Sep 16	1969	0245 - 0530	Mr. K. Henriksen
Sep 29	1969	2217 - 0007	Mr. J. Yliniemi
Oct 1	1969	0100 - 0345	Mr. A. Theander
Oct 1	1969	1305 - 1655	Mr. T. Berkey
Dec 23	1969	2220 - 0030	Mr. J. Yliniemi

Table 3

LIST OF RIOMETER STATIONS

Name of station	Notation on Fig. 1	Corrected geo-magnetic coord. lat.	long.	Geographic coordinates lat.	long.	Frequency MHz	Antenna pointing direction	Antenna type
Thule	THU	86.0	37.8	76.55	291.17	30.0	Vertical	3 elements Yagi
Resolute Bay	RES	84.3	306.0	74.70	265.10	30.0	Vertical	5 elements crossed Yagi
North Pole 10	N10	~81.0		drifting		32.0	Vertical	5 elements Yagi
North Pole 16	N16	~80.0		drifting		32.0	Vertical	5 elements Yagi
Godhavn	GOD	77.7	41.7	69.30	306.50	30.5	Vertical	Two 2 elements Yagi
Ny Ålesund	NYD	75.9	114.7	78.92	11.92	27.6	Vertical	3 elements Yagi
Frobisher Bay	FRB	74.9	14.7	63.80	291.40	30.0	Vertical	Simple two dipoles
Heiss Island	HIS	74.6	144.3	80.62	58.05	32.0	Polar	5 elements Yagi
Isfjord	ISF	74.6	113.9	78.06	13.63	27.6	Vertical	3 elements Yagi
Longyearbyen	LON	73.1	129.4	78.20	15.60	27.6	Vertical	3 elements Yagi
North Pole 13	N13	~72.0		drifting		32.0	Vertical	5 elements Yagi
Cape Chelyuskin	CCH	71.3	173.9	77.80	104.30	32.0	Polar	5 elements Yagi
Björnöya	BJR	71.3	110.5	74.51	19.18	27.6	Vertical	3 elements Yagi
Cape Z helania	CZH	71.1	147.5	77.00	68.60	32.0	Polar	5 elements Yagi
Inuvik	INU	71.1	268.4	68.35	226.20	30.0	Vertical	Dual quad
Churchill	CHU	70.3	325.9	58.80	265.80	30.0	Polar	5 elements crossed Yagi
Bar I	BAI	70.2	261.3	69.60	219.80	30.0	Vertical	3 elements crossed Yagi
Narssarssuaq	NAS	68.7	44.2	61.20	314.60	28.0	Vertical	3 elements Yagi
Point Barrow	BAR	68.4	241.2	71.13	203.20	30.0	Vertical	3 elements Yagi
Great Whale River	GWH	68.2	353.8	55.28	282.17	30.0	Vertical	Corner reflectors and simple two dipoles
Dixon Island	DIX	67.9	154.7	73.50	80.40	32.0	Polar	5 elements Yagi
Fort Yukon	FYU	67.1	260.7	66.57	214.75	30.0	Vertical	3 elements crossed Yagi
Leirvogur	LEI	66.5	71.2	64.10	338.20	30.0	Vertical	Simple two dipoles
Kevo	KEV	66.2	110.6	69.75	27.02	27.6	Vertical	3 elements Yagi
Andöya	AND	66.1	103.1	69.30	16.10	27.6	Vertical	3 elements Yagi
Tromsö	TRO	66.0	105.2	69.70	19.00	27.6	Vertical	3 elements Yagi
Karasjok	KAR	66.0	109.3	65.78	25.52	30.0	Vertical	Duo-dipole earth-screen
Cap Jones	CJO	65.8	346.0	54.50	280.50	30.0	Polar	5 elements crossed Yagi

Table 3 (continued)

LIST OF RIOMETER STATIONS

Name of station	Notation on Fig. 1	Corrected geo-magnetic coord. lat.	Corrected geo-magnetic coord. long.	Geographic coordinates lat.	Geographic coordinates long.	Frequency MHz	Antenna pointing direction	Antenna type
Tixie Bay	TIX	65.6	195.2	71.60	128.90	32.0	Polar	5 elements Yagi
Cap Schmidt	CSC	65.0	235.0	68.92	179.48	32.0	Polar	5 elements Yagi
College	COL	64.9	260.3	64.87	212.20	30.0	Vertical	3 elements crossed Yagi
Kotzebue	KOT	64.4	247.5	66.90	197.50	30.0	Vertical	3 elements Yagi
Kiruna	KIR	64.3	104.9	67.80	20.40	27.6	Vertical	3 elements Yagi
Loparskaya	LOP	64.0	115.5	68.25	33.08	32.0	Polar	5 elements Yagi
Amderma	AMD	63.9	137.5	69.77	61.68	32.0	Polar	5 elements Yagi
Moosonee	MOO	63.8	348.7	51.50	279.33	30.0	Polar, vertical and south	5 elements crossed Yagi
Healy	HEA	63.7	260.2	64.00	211.00	30.0	Vertical	3 elements Yagi
Paxon	PAX	63.5	263.6	63.04	214.50	30.0	Vertical	Dual quad
Sodankylä	SOD	63.4	108.9	67.40	26.60	27.6	Vertical	Two 2 elements Yagi
Norilsk	NOR	63.4	159.5	69.43	88.09	32.0	Polar	5 elements Yagi
Oulu	OUL	61.8	106.1	65.10	25.48	27.6	Vertical	3 elements Yagi
Salekhard	SAL	61.8	140.4	66.50	66.70	32.0	Polar	5 elements Yagi
Prince Albert	PAL	61.7	311.0	63.20	254.10	30.0	Polar	5 elements crossed Yagi
Lycksele	LYC	61.2	101.4	64.70	18.80	27.6	Vertical	3 elements Yagi
Sheep Mountain	SMO	61.0	262.9	61.82	212.50	30.0	Vertical	Dual quad
Anchorage	ANC	60.8	261.3	61.20	210.15	30.0	Vertical	Duo-dipole earth-screen
Baie St. Paul	BSP	59.9	359.0	47.37	289.45	30.0	Vertical	Simple two dipoles
Wildwood	WIL	59.7	260.6	60.56	208.75	30.0	Vertical	Dual quad
Val d'Or	VAL	59.3	352.9	48.00	282.20	30.0	Polar	5 elements crossed Yagi
Ottawa	OTT	58.9	355.4	45.40	284.10	30.0	Polar	5 elements crossed Yagi
S. Uist	SUI	57.6	75.9	57.33	351.63	27.6	Vertical	3 elements Yagi
Nurmijärvi	NUR	57.1	102.9	60.50	24.65	27.6	Vertical	3 elements Yagi
Uppsala	UPP	56.4	98.0	58.85	17.92	27.6	Vertical	3 elements Yagi

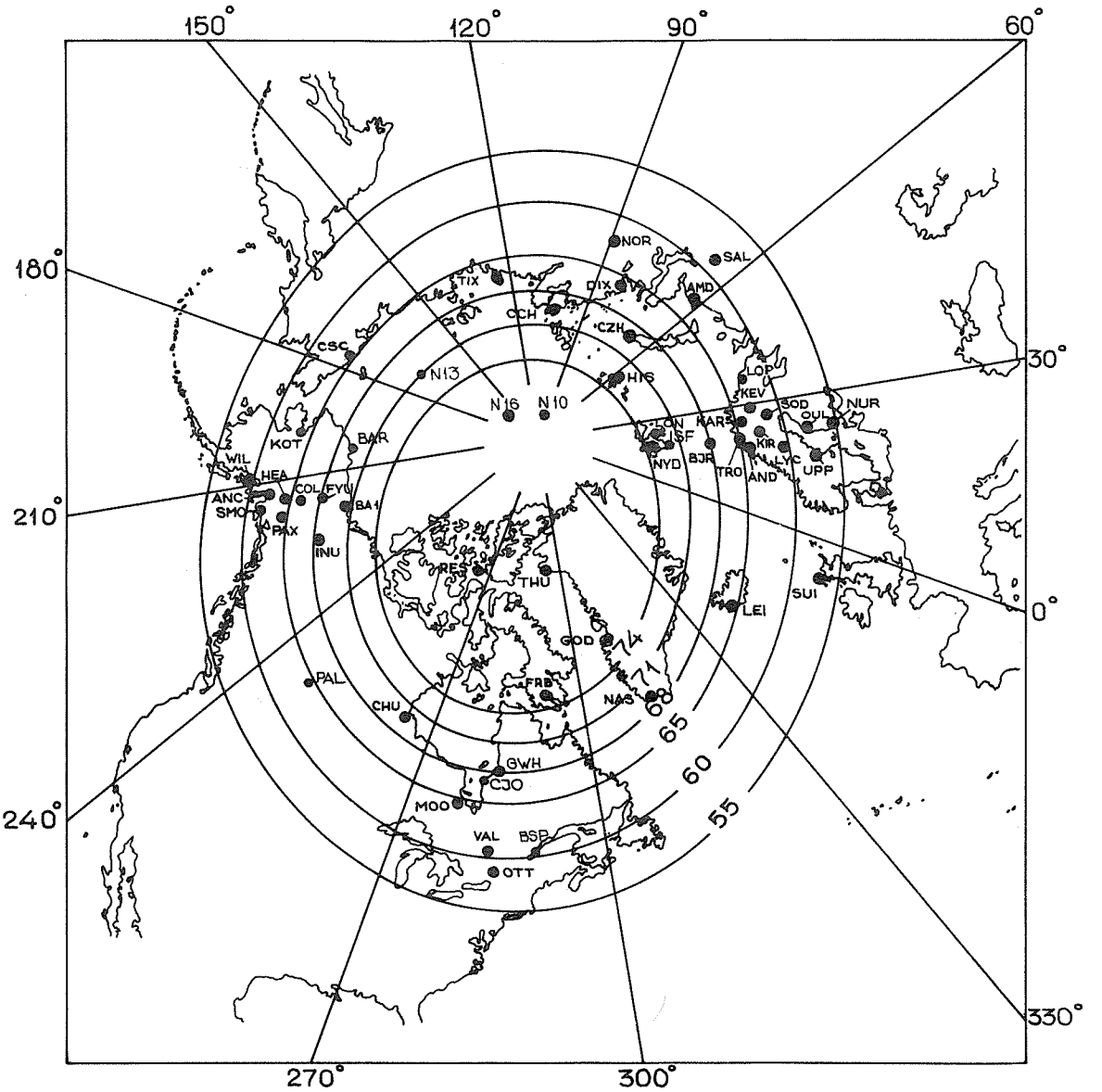

Fig. 1. Locations of the riometer stations which have delivered the data on which the synoptic maps in this report are based. For the names and coordinates see Table 3. The oval curves show the corrected geomagnetic latitudes which do not differ by a measurable amount from the invariant latitude curves for this scale. The meridians are the geographic ones.

JANUARY 25, 1964, 0545 UT

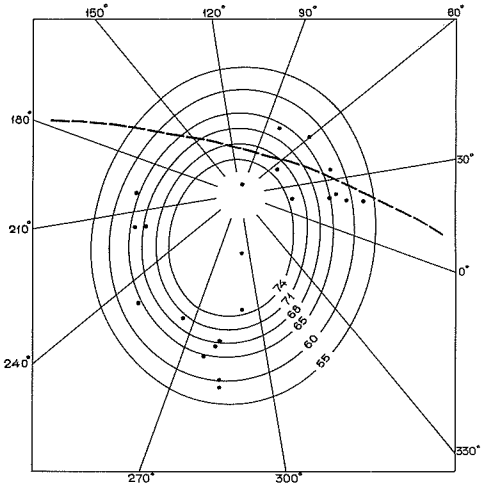

JANUARY 25, 1964, 0600 UT

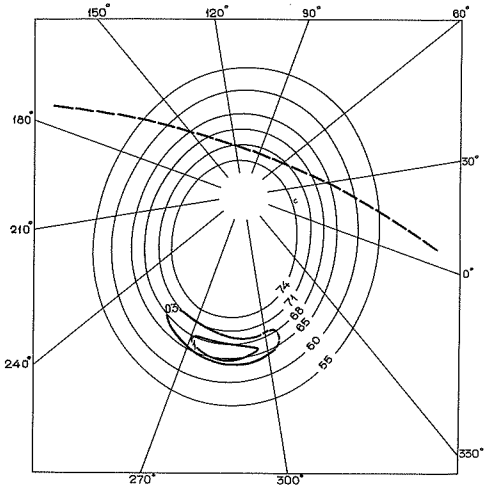

JANUARY 25, 1964, 0615 UT

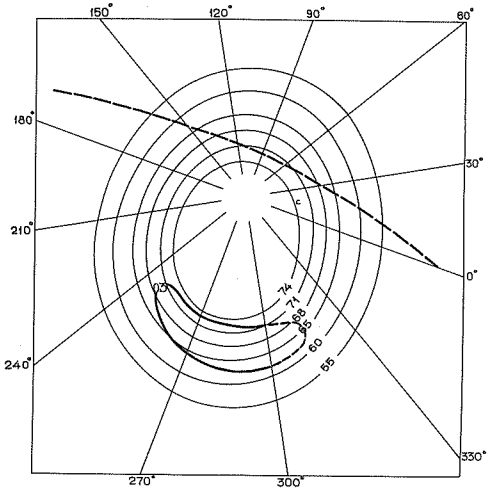

JANUARY 25, 1964, 0625 UT

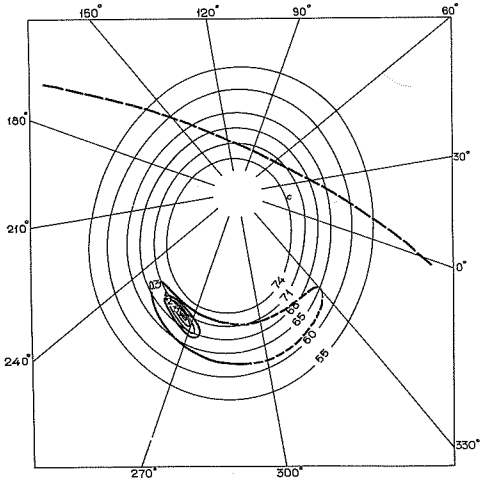

JANUARY 25, 1964, 0630 UT

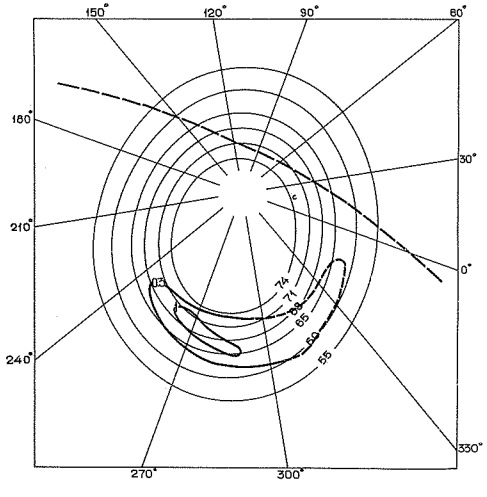

JANUARY 25, 1964, 0645 UT

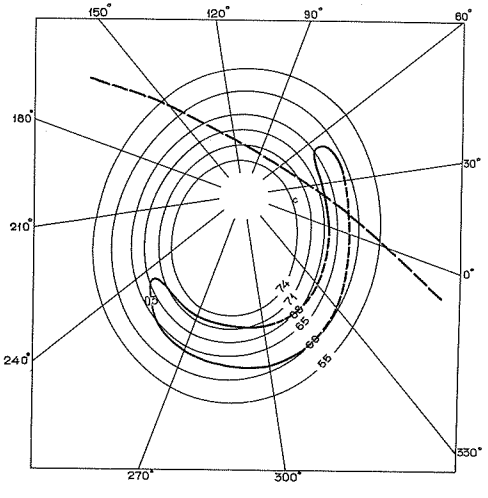

JANUARY 25, 1964, 0700 UT

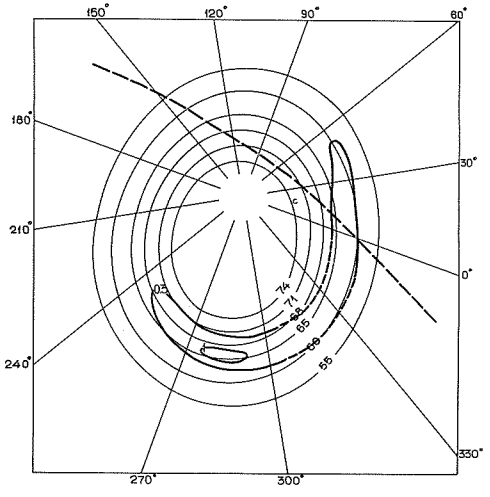

JANUARY 25, 1964, 0715 UT

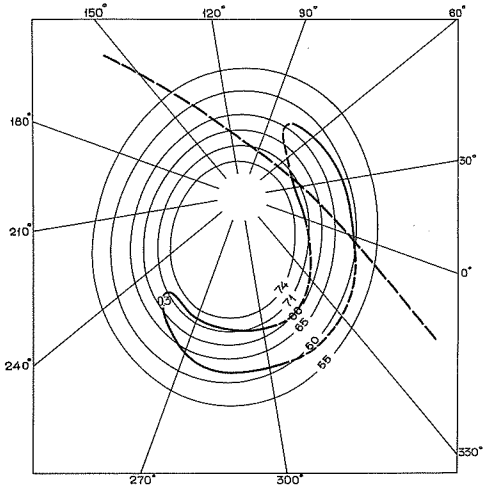

JANUARY 25, 1964, 0730 UT

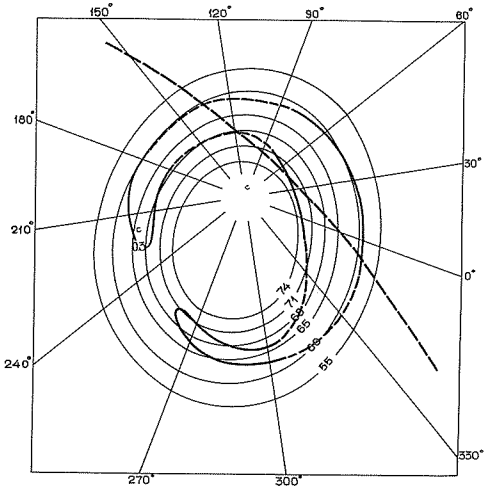

JANUARY 25, 1964, 0745 UT

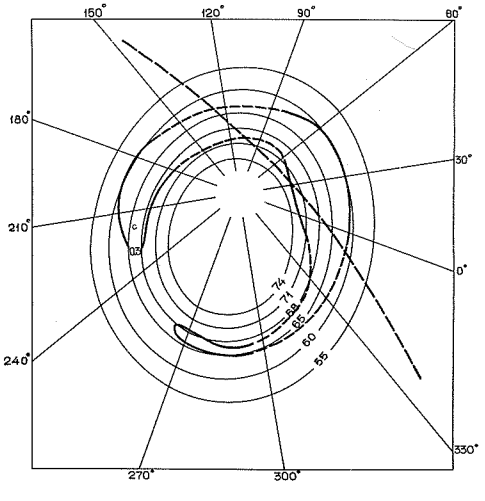

JANUARY 25, 1964, 0800 UT

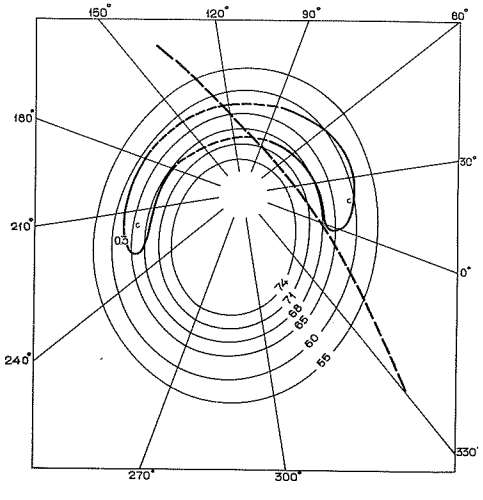

JANUARY 25, 1964, 0830 UT

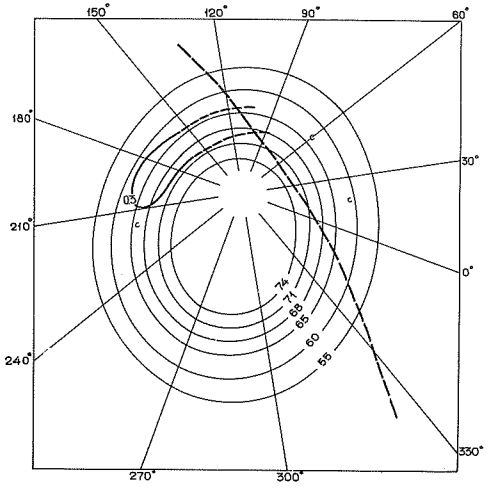

January 25, 1964, 2000 UT

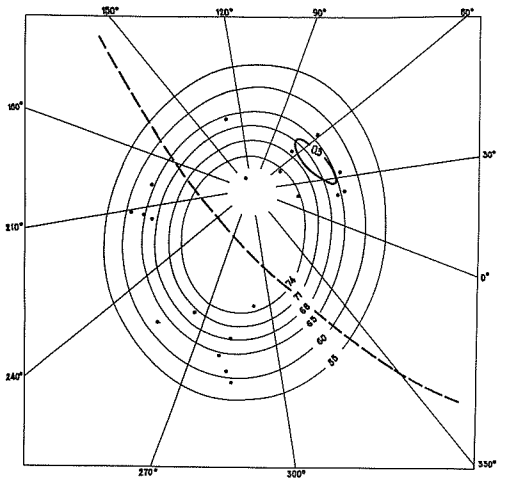

January 25, 1964, 2015 UT

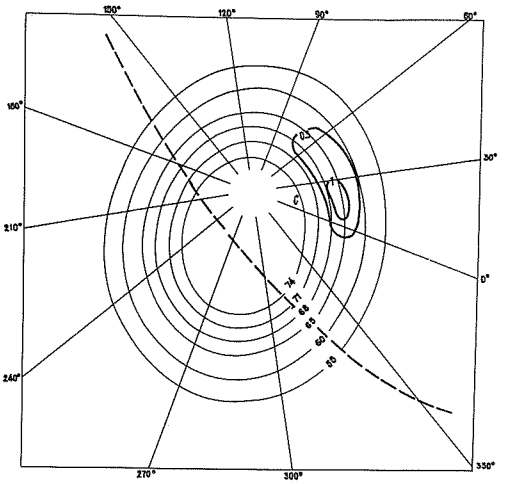

January 25, 1964, 2025 UT

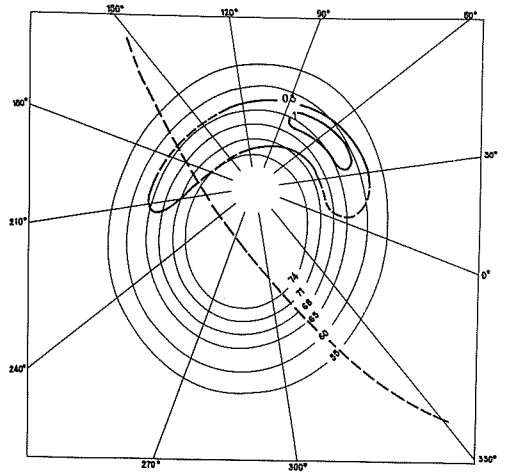

January 25, 1964, 2030 UT

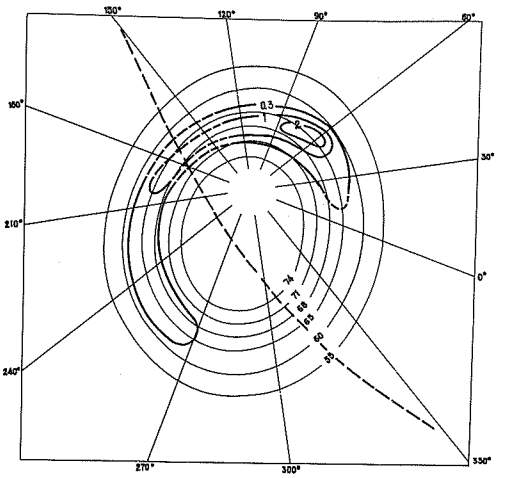

January 25, 1964, 2045 UT

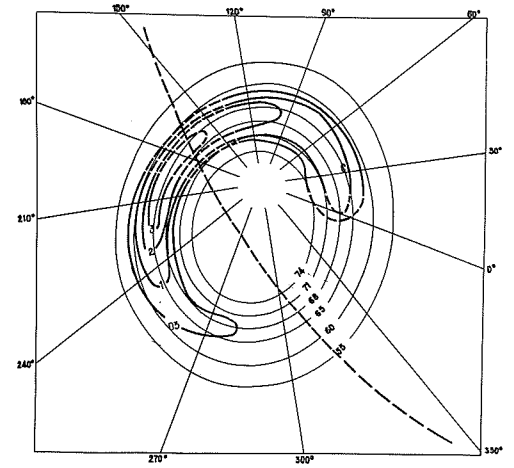

January 25, 1964, 2100 UT

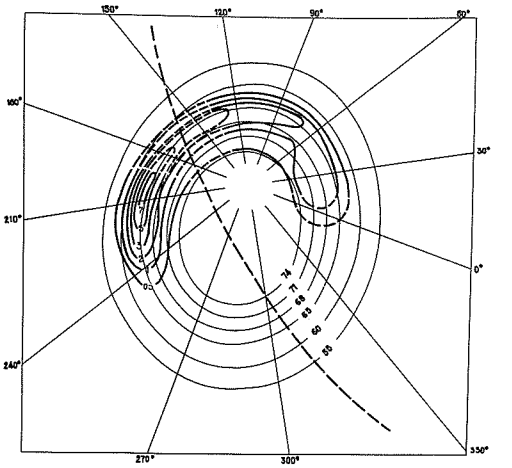

January 25, 1964, 2115 UT

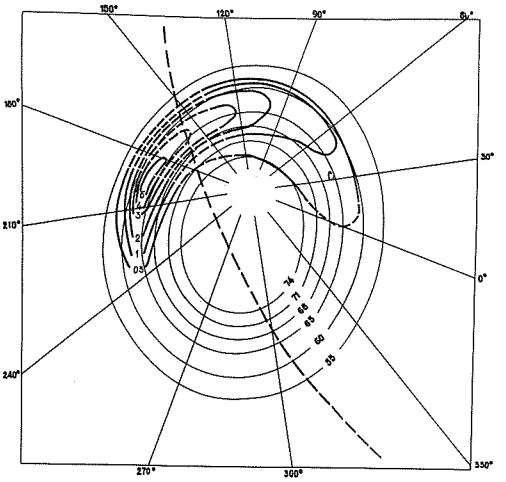

January 25, 1964, 2130 UT

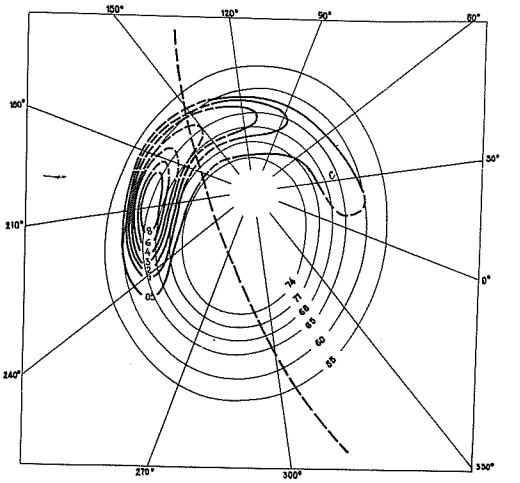

January 25, 1964, 2145 UT

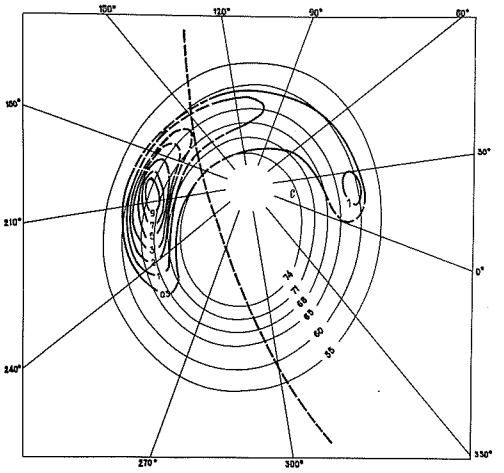

FEBRUARY 6, 1964, 0500 UT

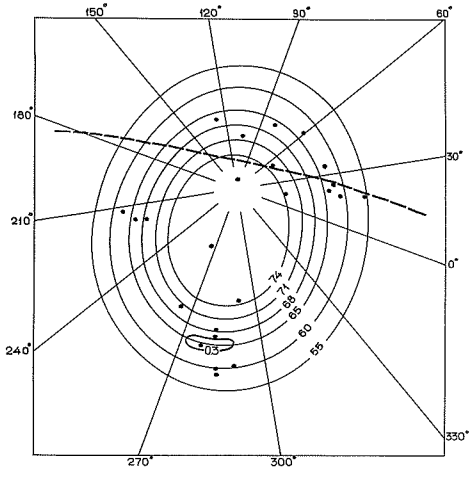

FEBRUARY 6, 1964, 0515 UT

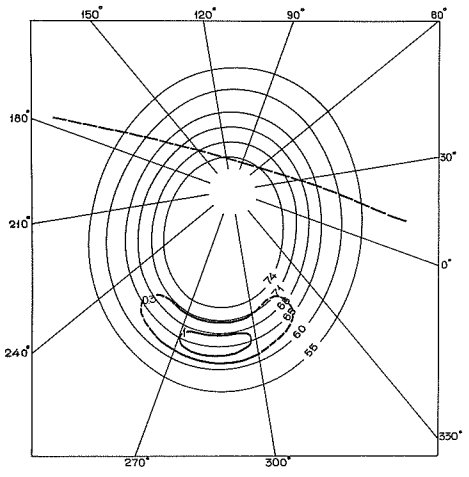

FEBRUARY 6, 1964, 0530 UT

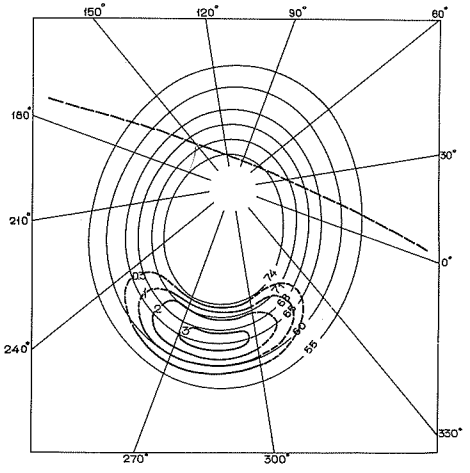

FEBRUARY 6, 1964, 0545 UT

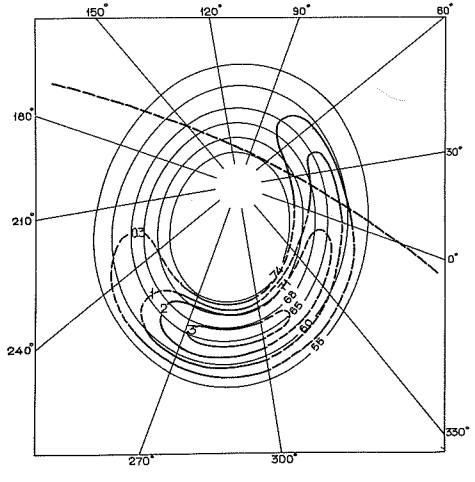

FEBRUARY 6, 1964, 0600 UT

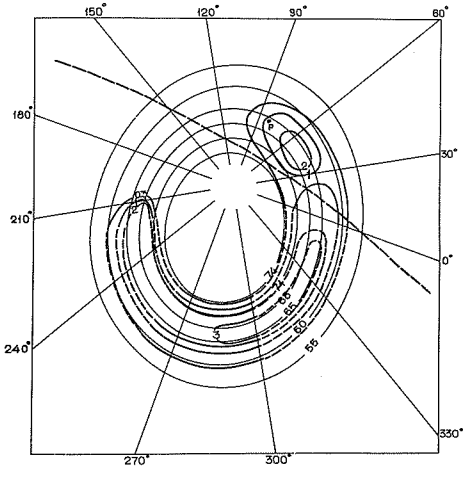

FEBRUARY 6, 1964, 0615 UT

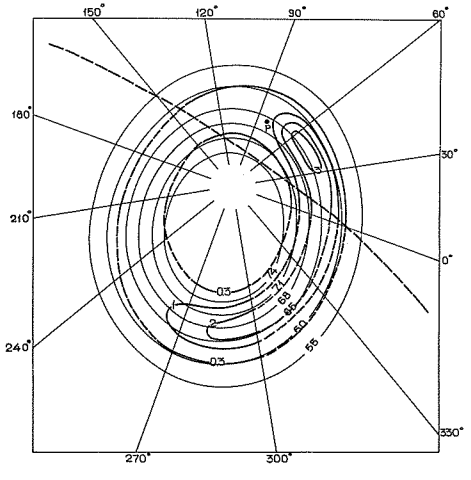

FEBRUARY 6, 1964, 0630 UT

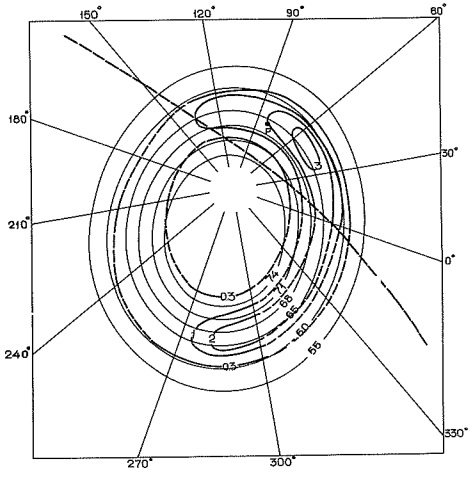

FEBRUARY 6, 1964, 0645 UT

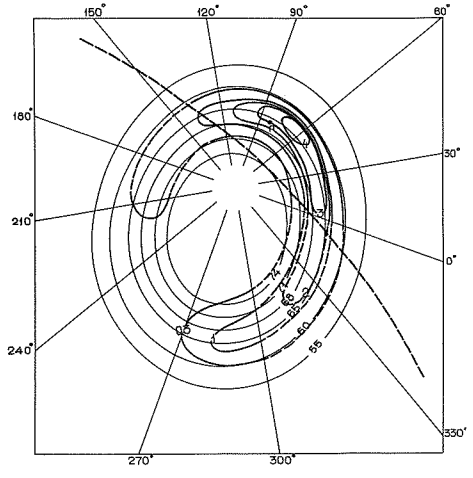

FEBRUARY 6, 1964, 0700 UT

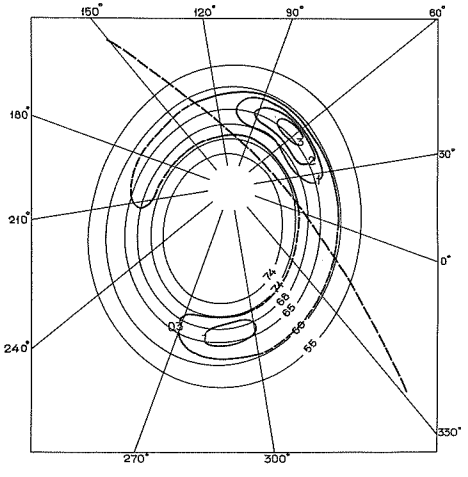

FEBRUARY 6, 1964, 0715 UT

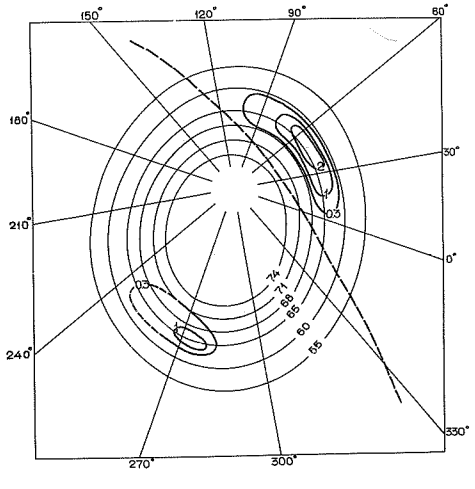

FEBRUARY 6, 1964, 0730 UT

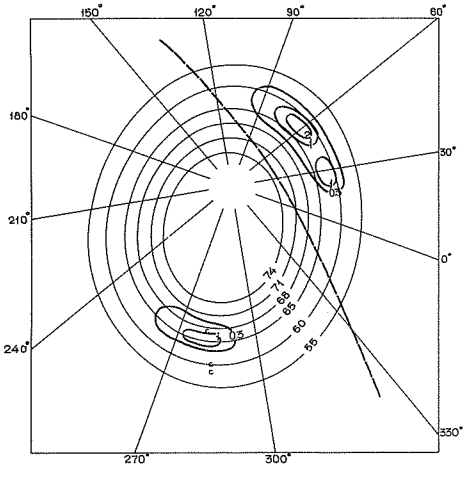

FEBRUARY 6, 1964, 0745 UT

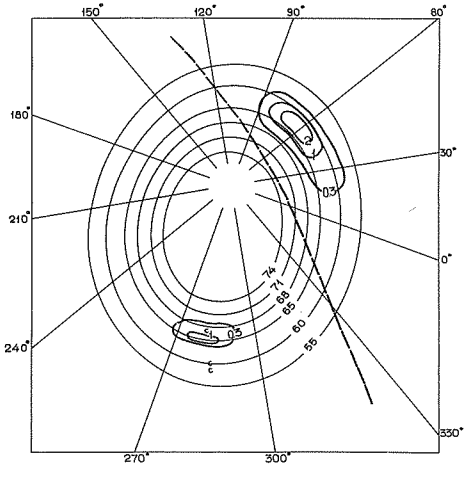

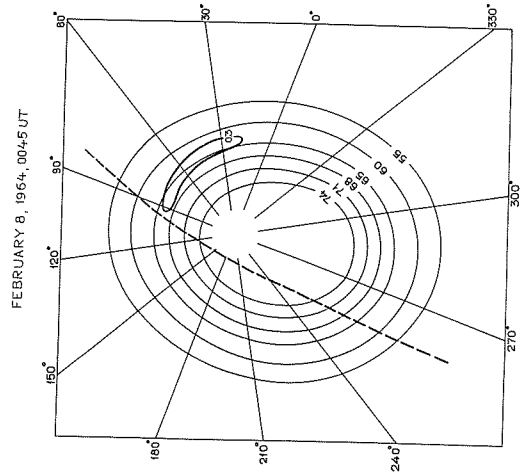
FEBRUARY 8, 1964, 0045 UT

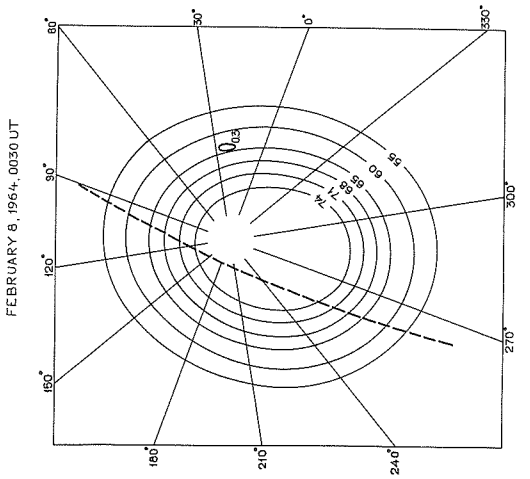
FEBRUARY 8, 1964, 0030 UT

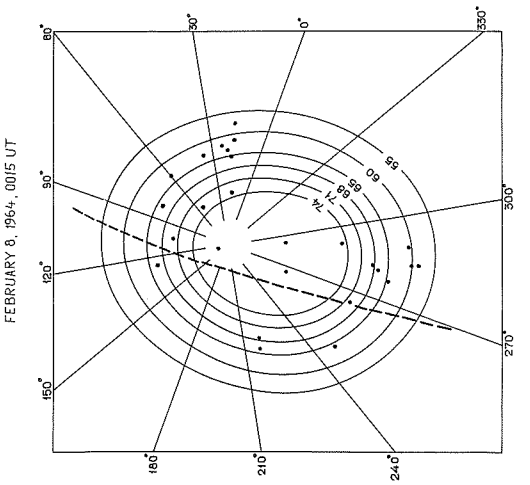
FEBRUARY 8, 1964, 0015 UT

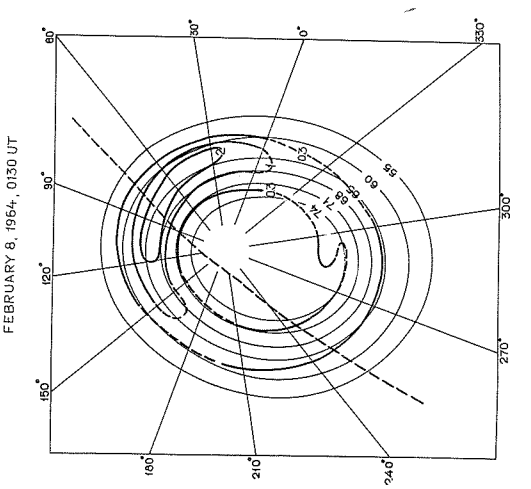
FEBRUARY 8, 1964, 0130 UT

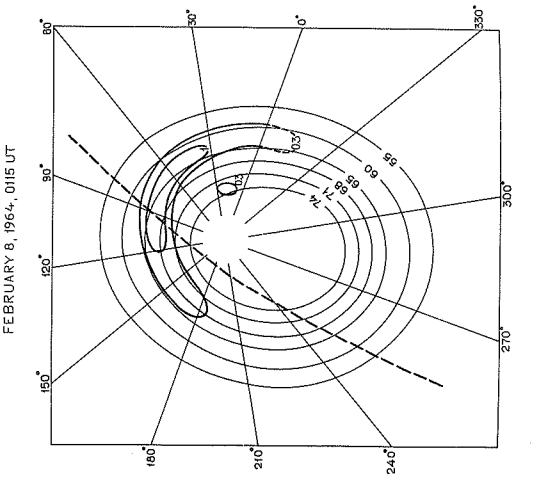
FEBRUARY 8, 1964, 0115 UT

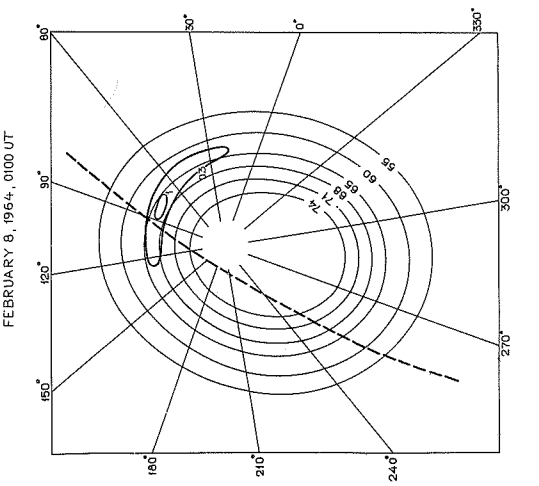
FEBRUARY 8, 1964, 0100 UT

FEBRUARY 8, 1964, 0145 UT

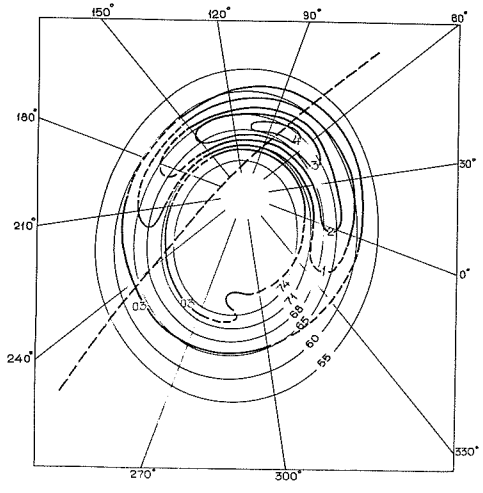

FEBRUARY 8, 1964, 0200 UT

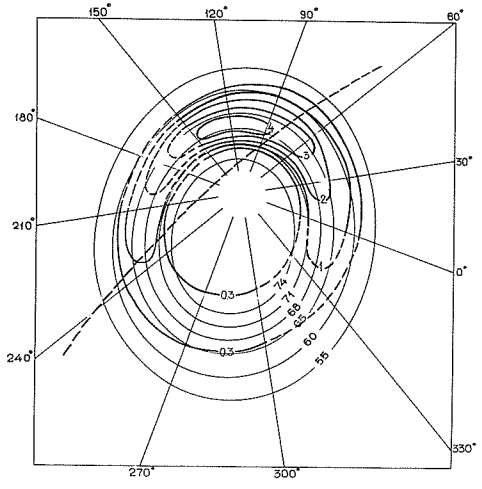

FEBRUARY 8, 1964, 0215 UT

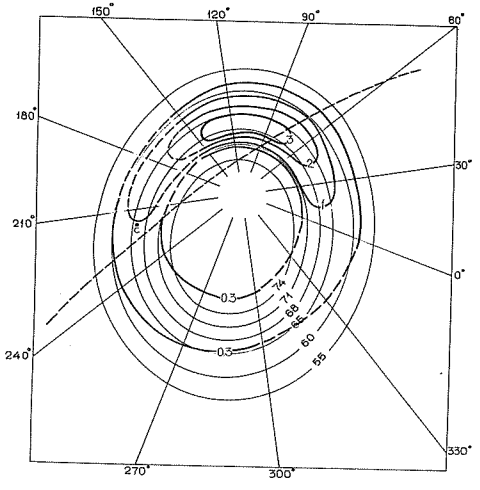

FEBRUARY 8, 1964, 0230 UT

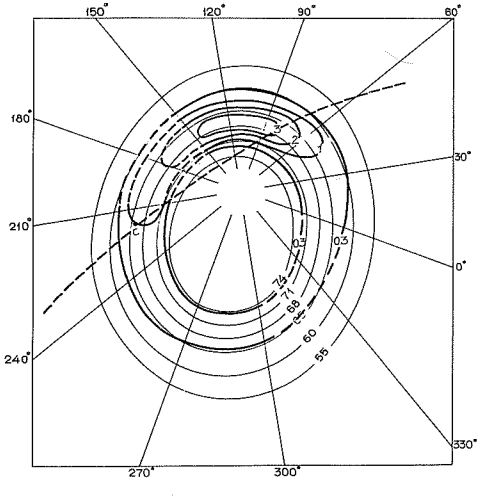

FEBRUARY 8, 1964, 0245 UT

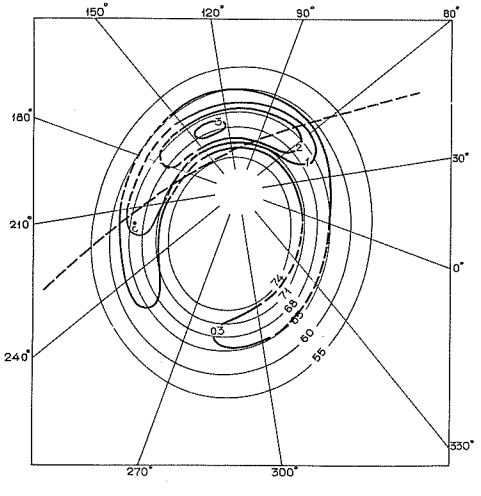

FEBRUARY 8, 1964, 0300 UT

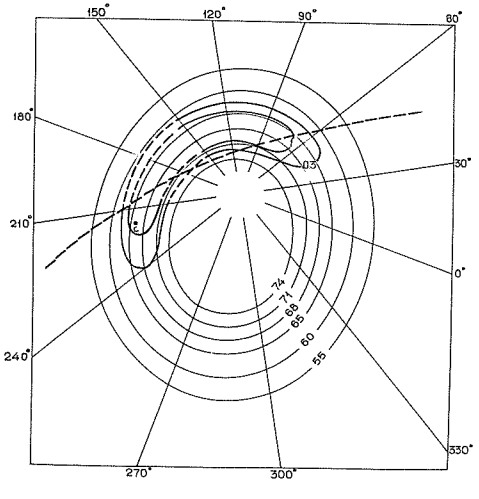

February 25, 1964, 1845 UT

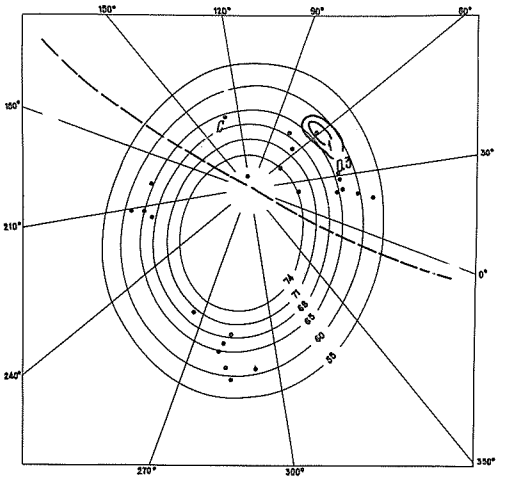

February 25, 1964, 1900 UT

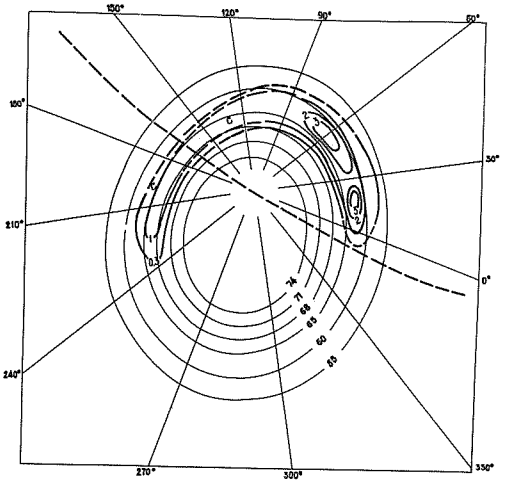

February 25, 1964, 1915 UT

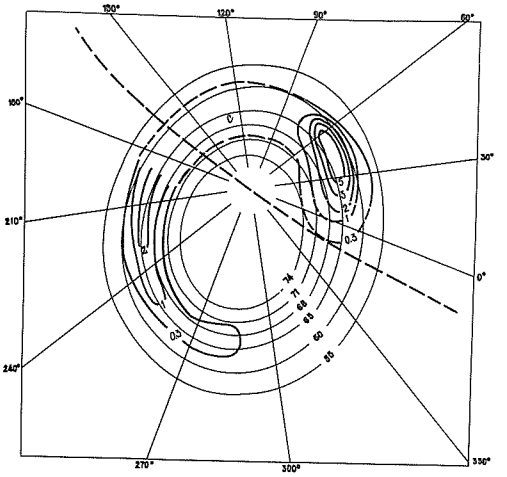

February 25, 1964, 1930 UT

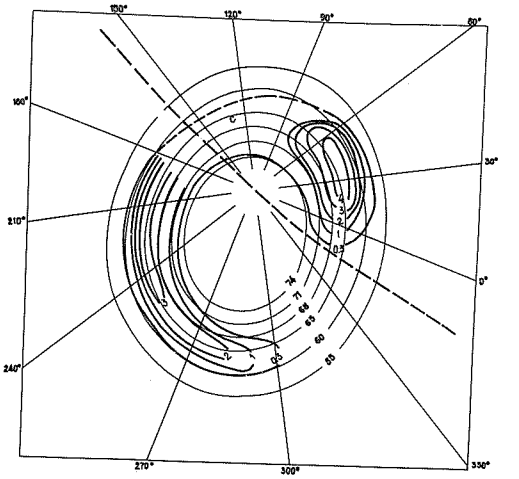

February 25, 1964, 1945 UT

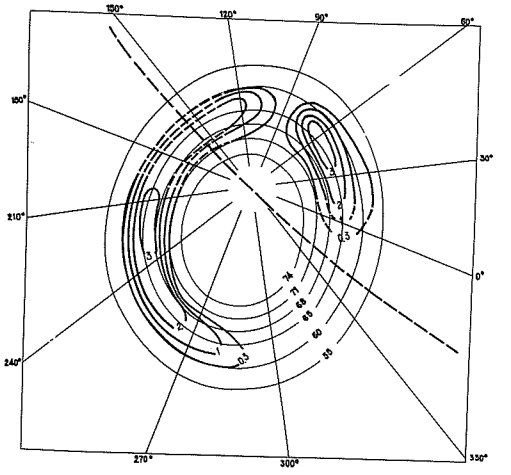

February 25, 1964 2000 UT

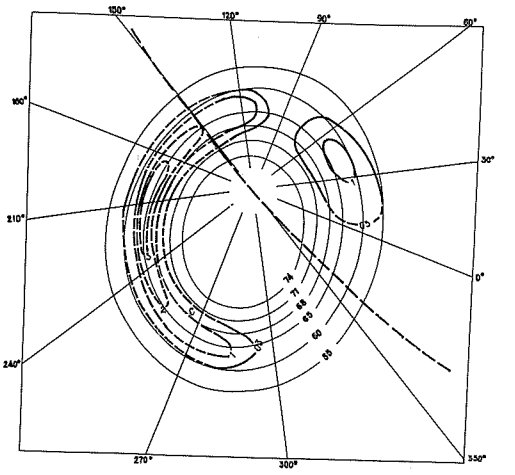

February 25, 1964 2015 UT

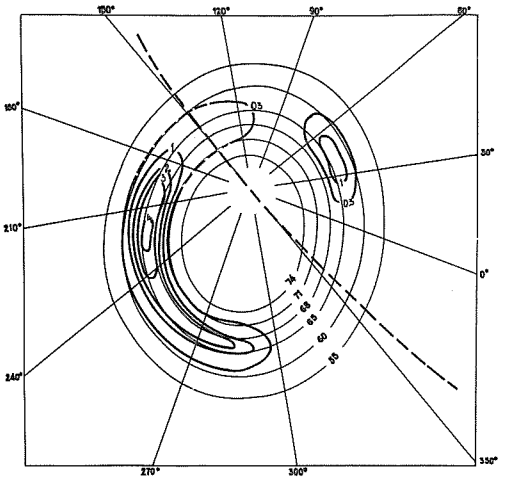

February 25, 1964 2030 UT

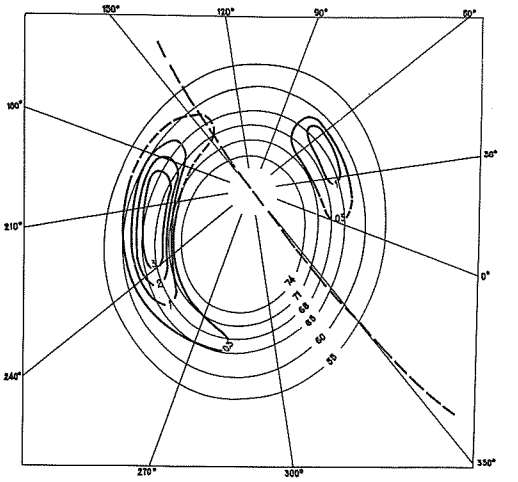

February 25, 1964, 2045 UT

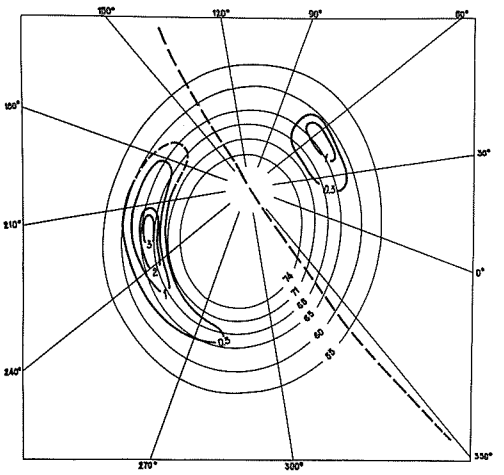

February 25, 1964, 2100 UT

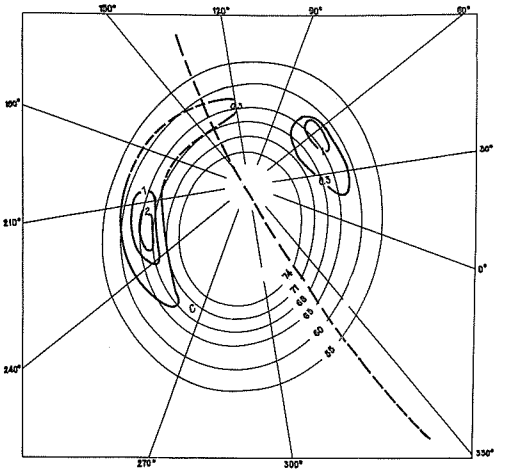

APRIL 17, 1964, 0115 UT

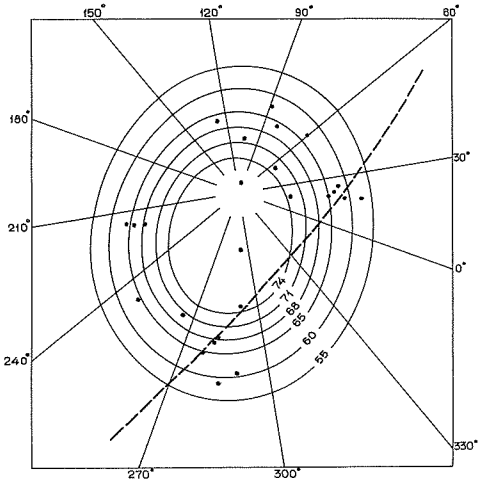

APRIL 17, 1964, 0130 UT

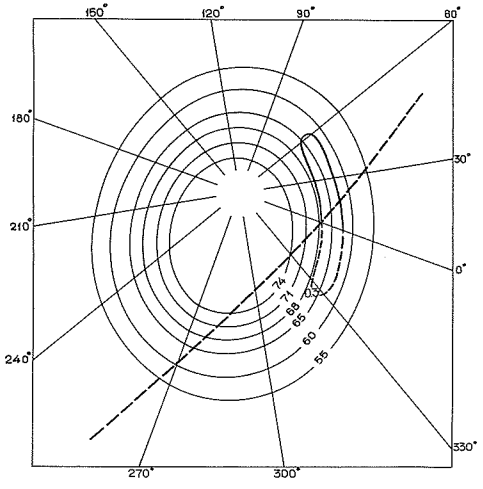

APRIL 17, 1964, 0145 UT

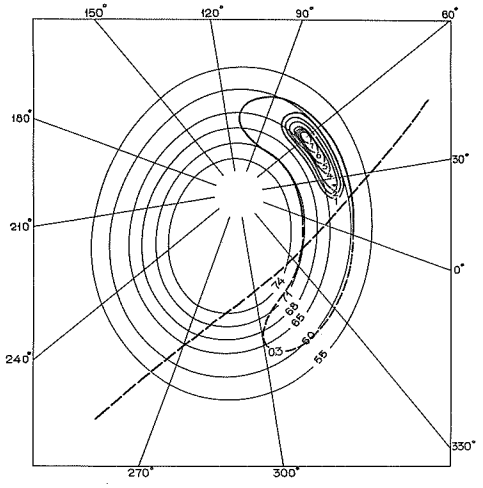

APRIL 17, 1964, 0200 UT

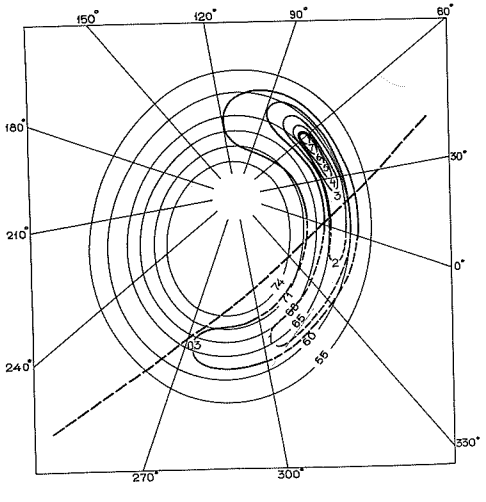

APRIL 17, 1964, 0215 UT

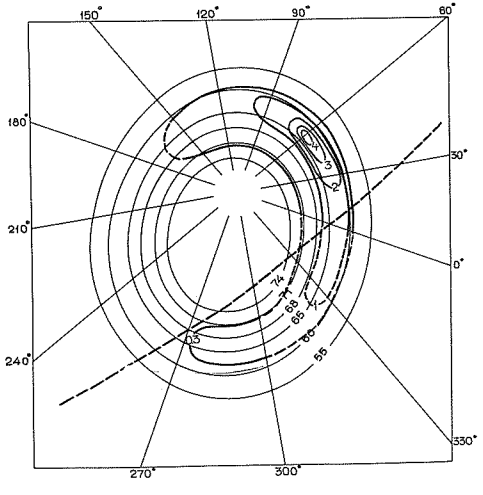

APRIL 17, 1964, 0230 UT

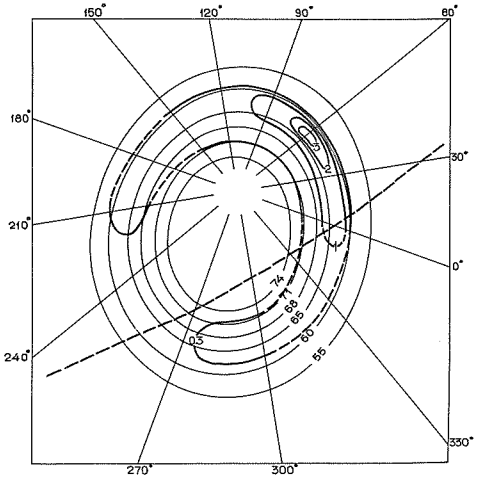

APRIL 17, 1964, 0245 UT

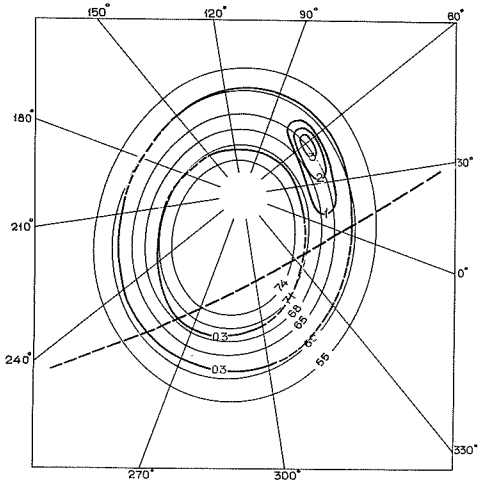

APRIL 17, 1964, 0300 UT

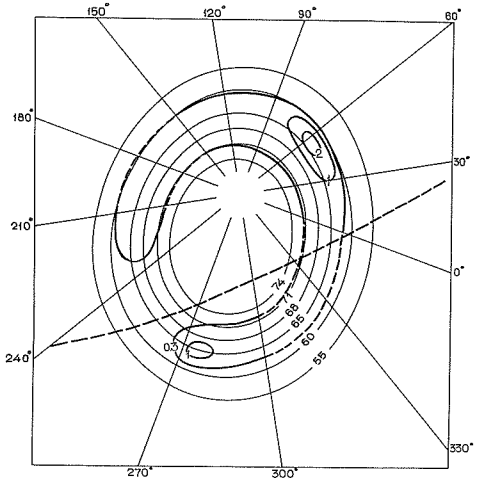

APRIL 17, 1964, 0315 UT

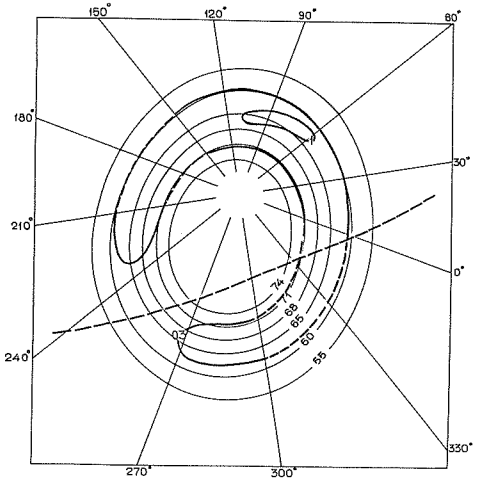

APRIL 17, 1964, 0330 UT

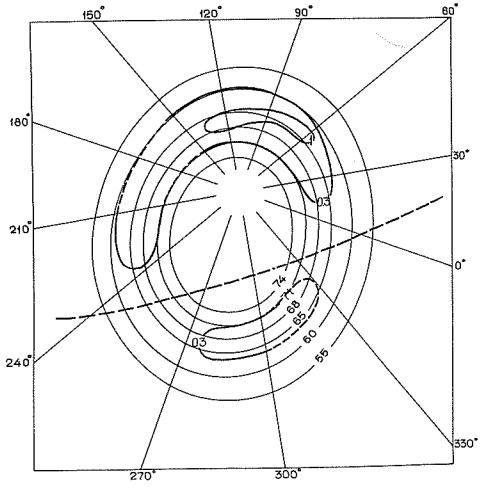

APRIL 17, 1964, 0345 UT

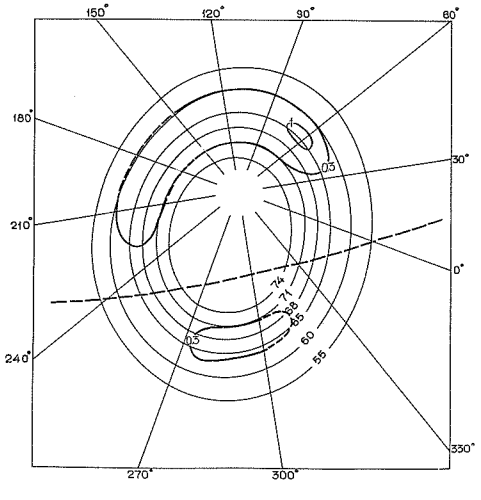

APRIL 17, 1964, 0400 UT

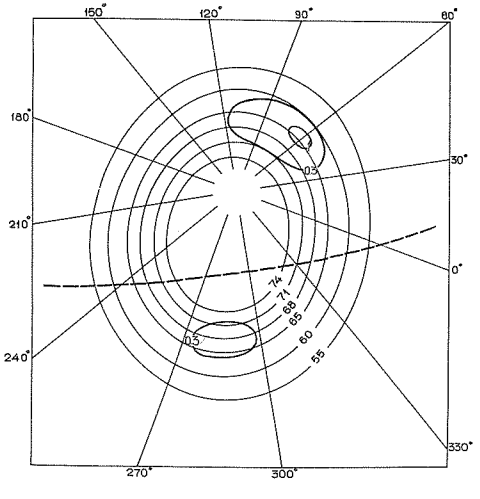

MAY 15, 1964, 0300 UT

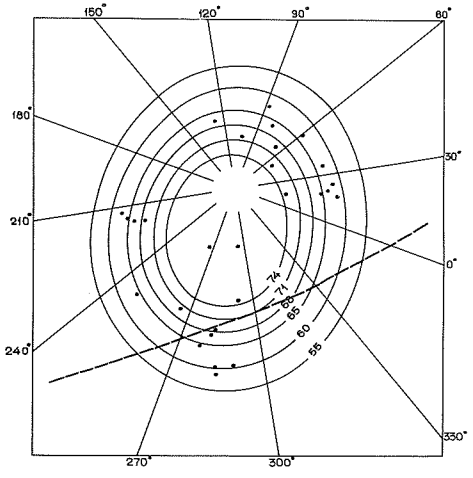

MAY 15, 1964, 0315 UT

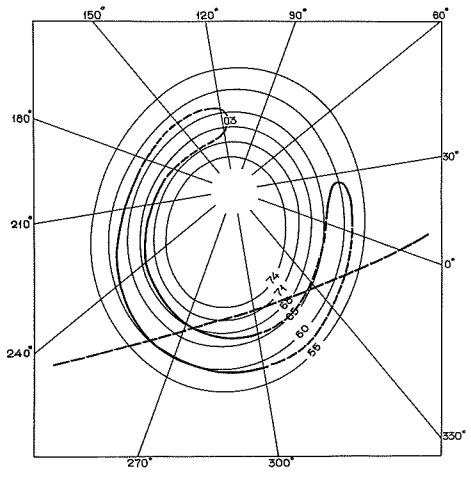

MAY 15, 1964, 0330 UT

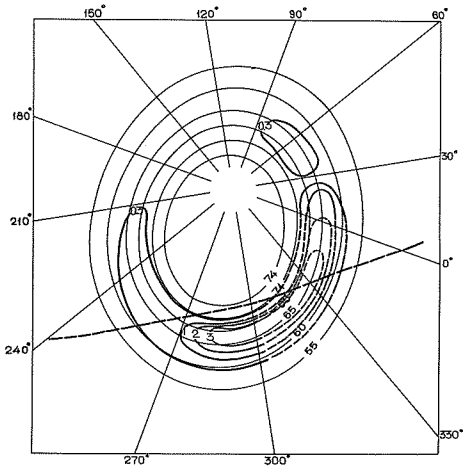

MAY 15, 1964, 0345 UT

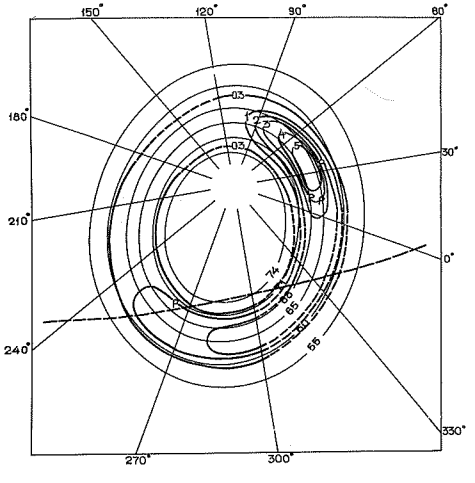

MAY 15, 1964, 0400 UT

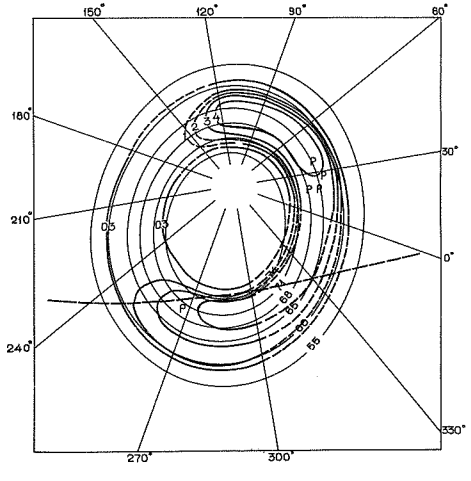

MAY 15, 1964, 0415 UT

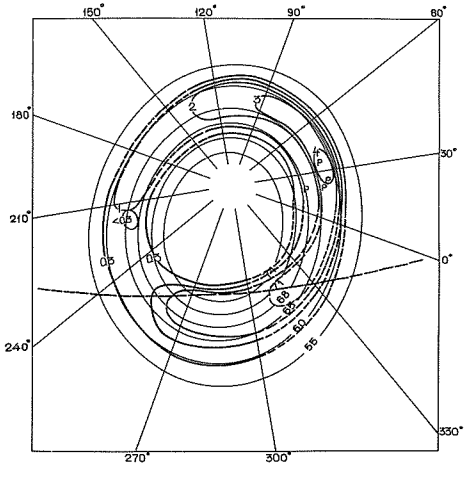

MAY 15, 1964, 0430 UT

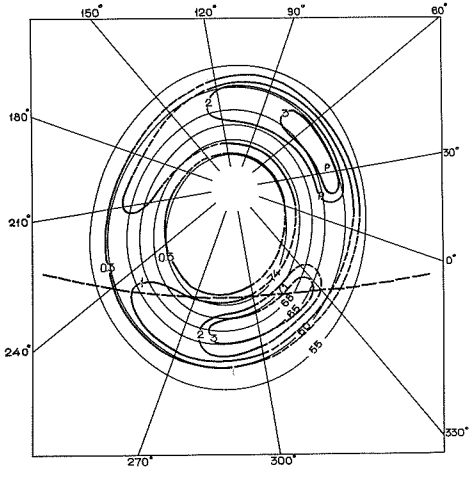

MAY 15, 1964, 0445 UT

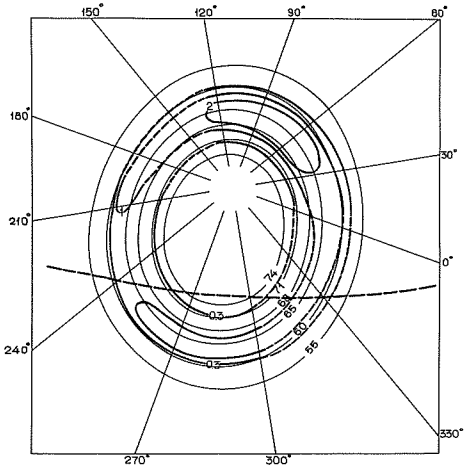

MAY 15, 1964, 0500 UT

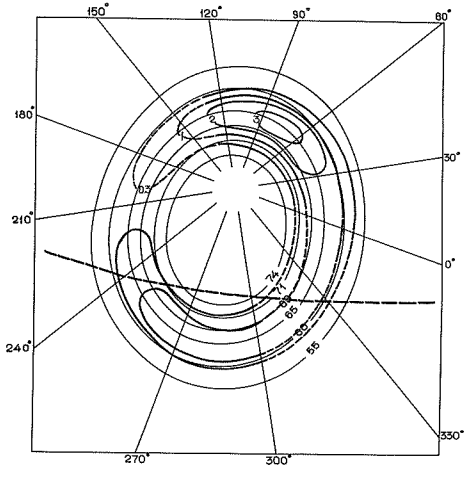

MAY 15, 1964, 0515 UT

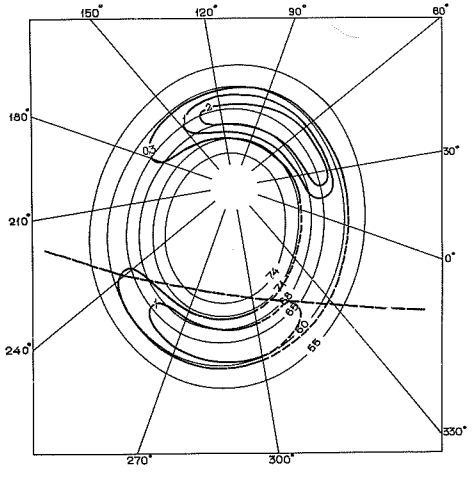

MAY 15, 1964, 0530 UT

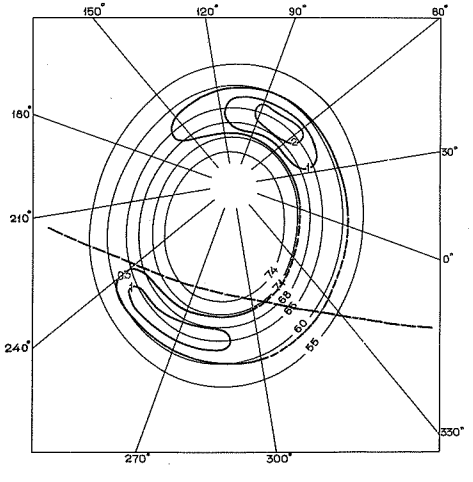

MAY 15, 1964, 0545 UT

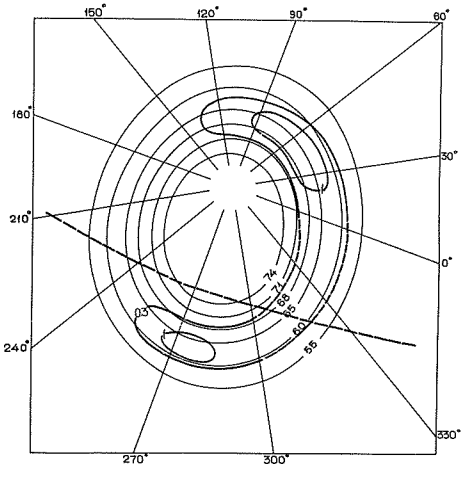

MAY 18, 1964, 0530 UT

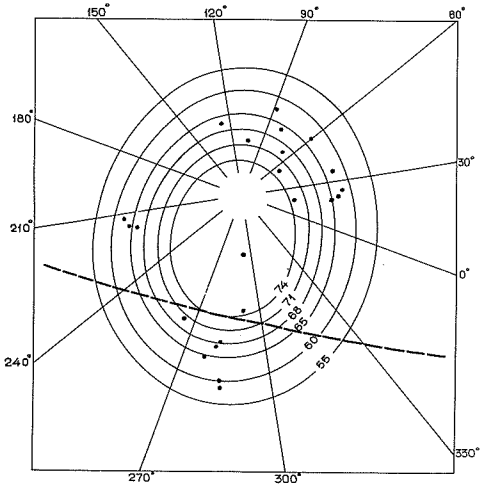

MAY 18, 1964, 0545 UT

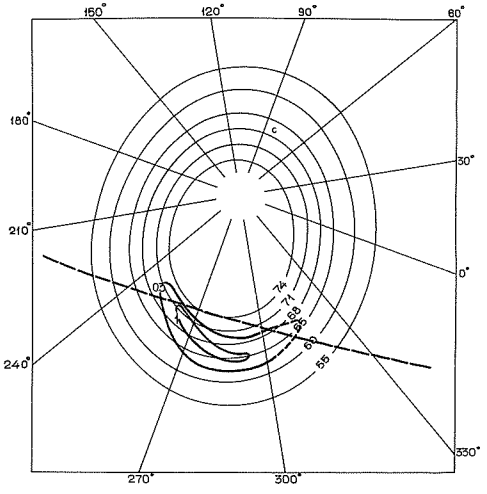

MAY 18, 1964, 0600 UT

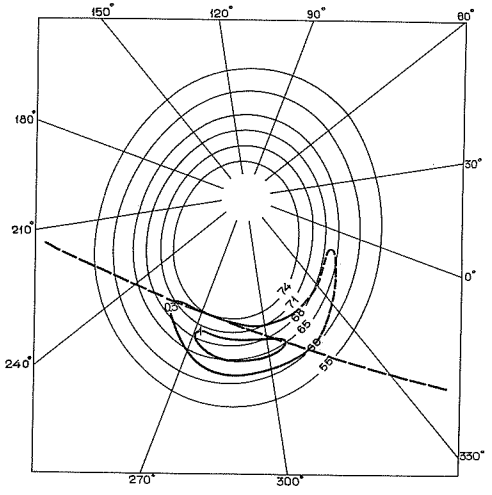

MAY 18, 1964, 0610 UT

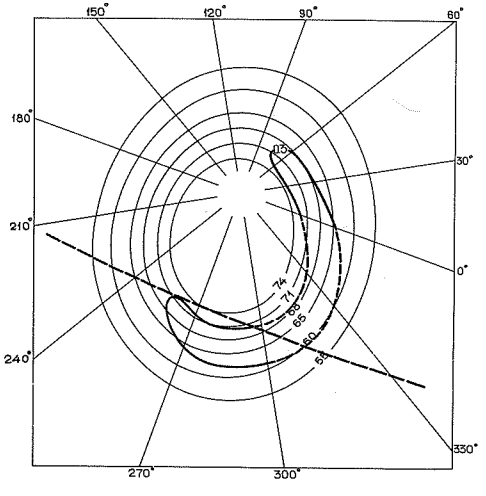

MAY 18, 1964, 0630 UT

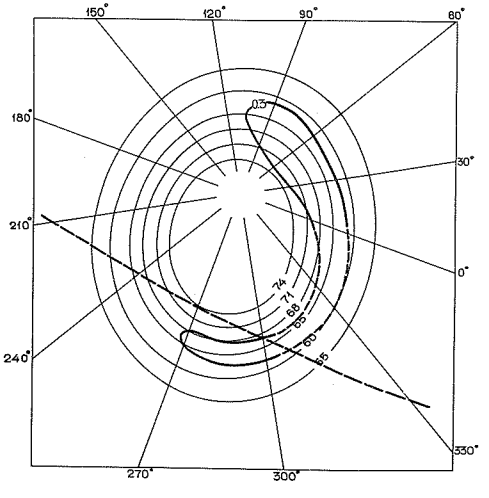

MAY 18, 1964, 0645 UT

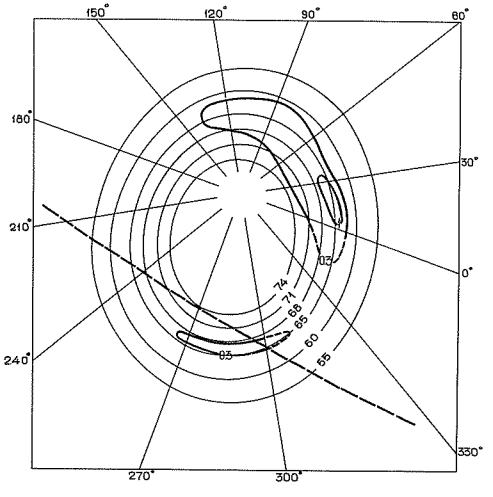

MAY 18, 1964, 0700 UT

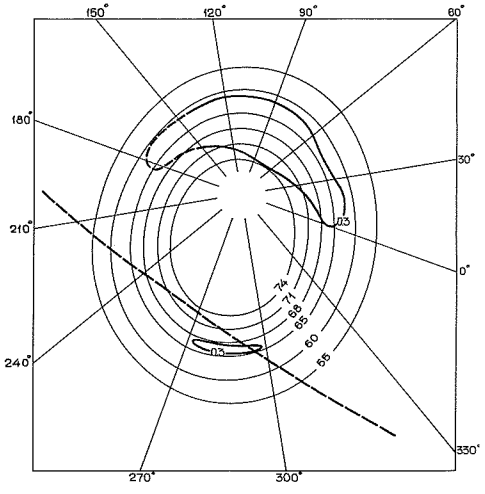

MAY 18, 1964, 0715 UT

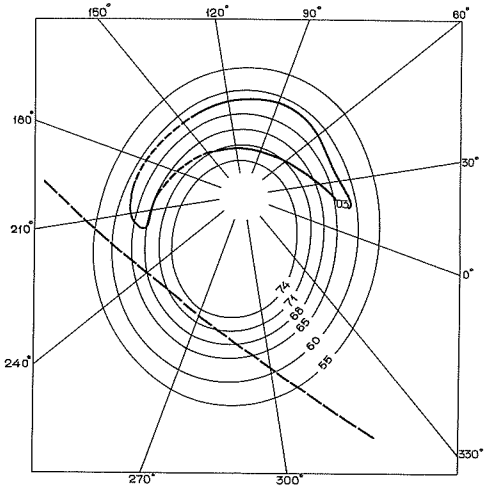

MAY 18, 1964, 0730 UT

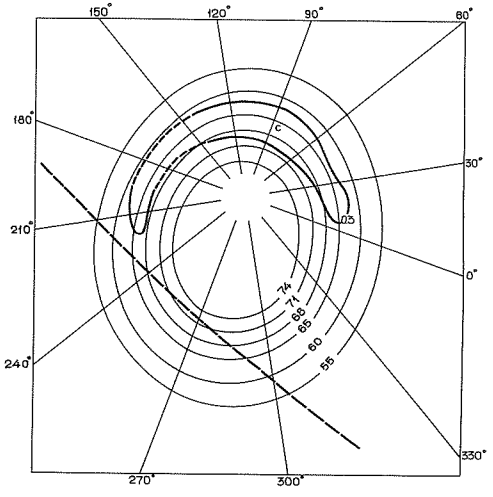

MAY 18, 1964, 0800 UT

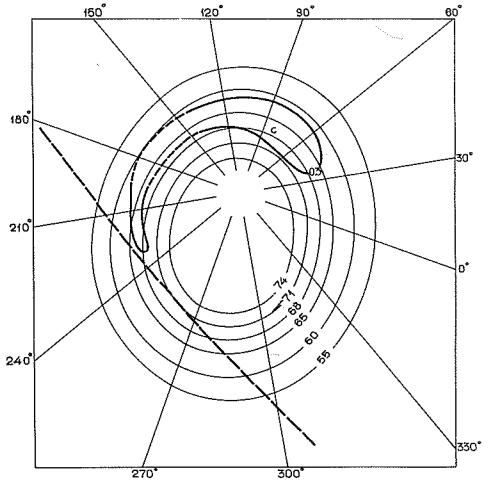

MAY 18, 1964, 0830 UT

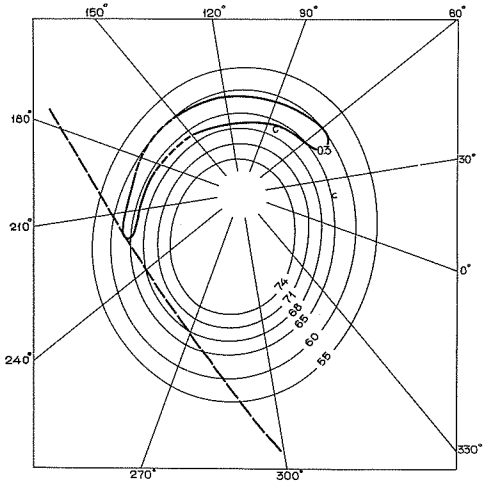

MAY 18, 1964, 0900 UT

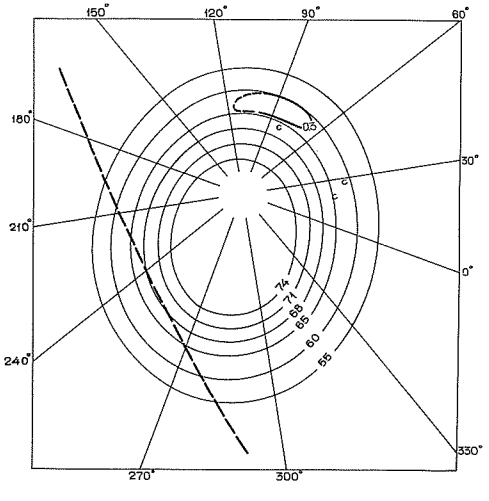

AUGUST 26, 1964, 0545 UT

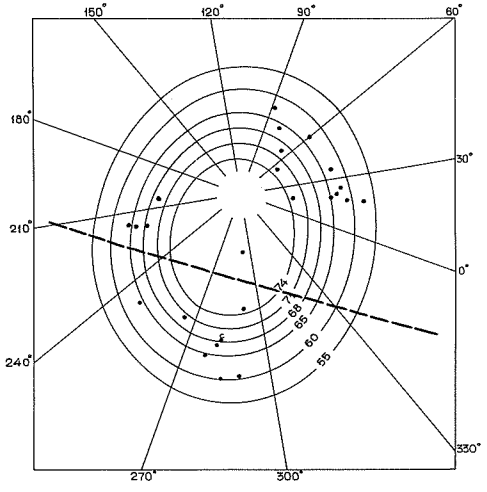

AUGUST 26, 1964, 0600 UT

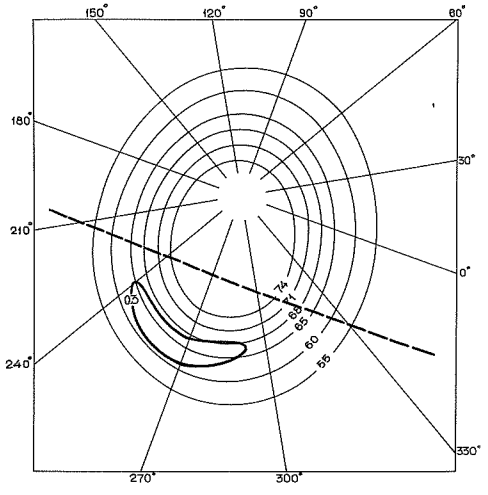

AUGUST 26, 1964, 0615 UT

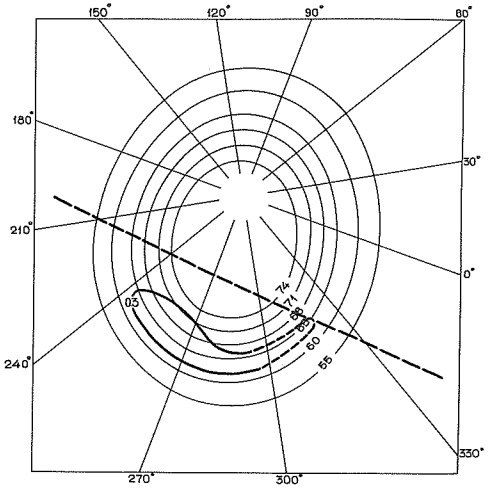

AUGUST 26, 1964, 0630 UT

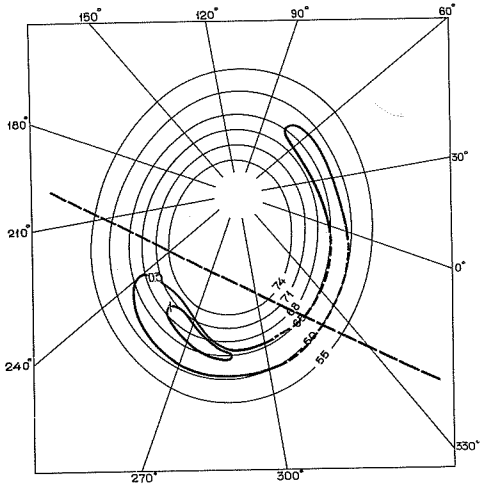

AUGUST 26, 1964, 0645 UT

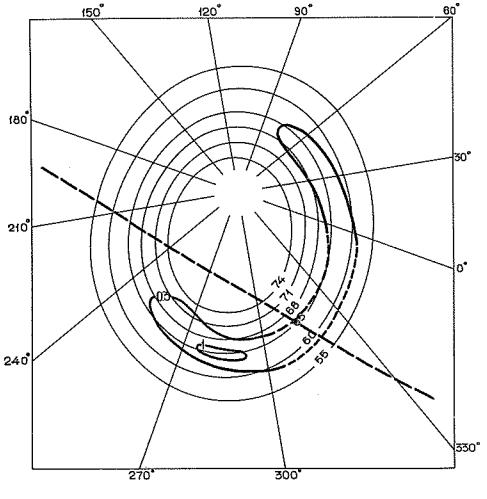

AUGUST 26, 1964, 0700 UT

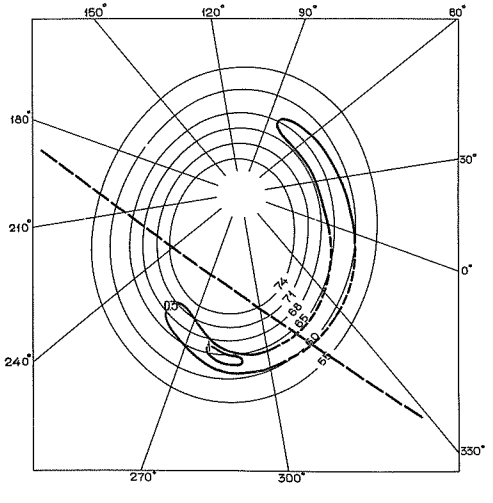

AUGUST 26, 1964, 0715 UT

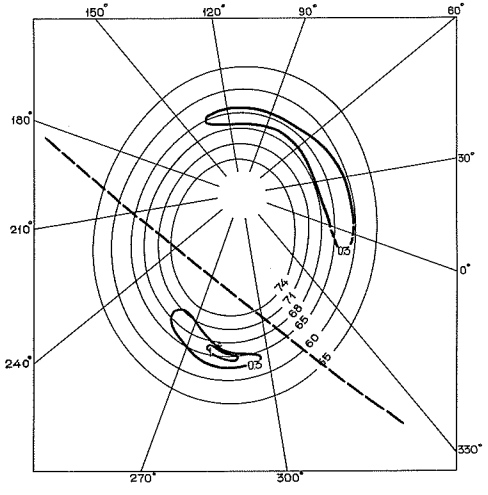

AUGUST 26, 1964, 0730 UT

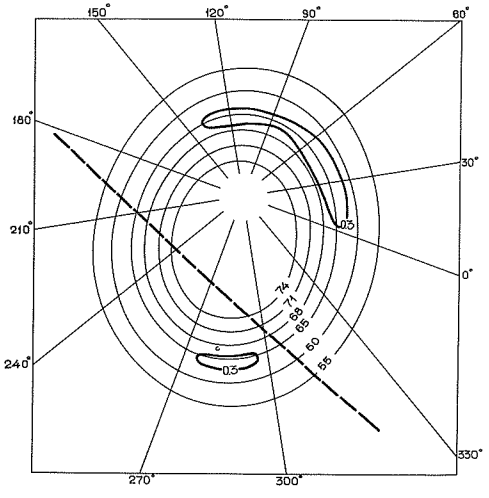

AUGUST 26, 1964, 0745 UT

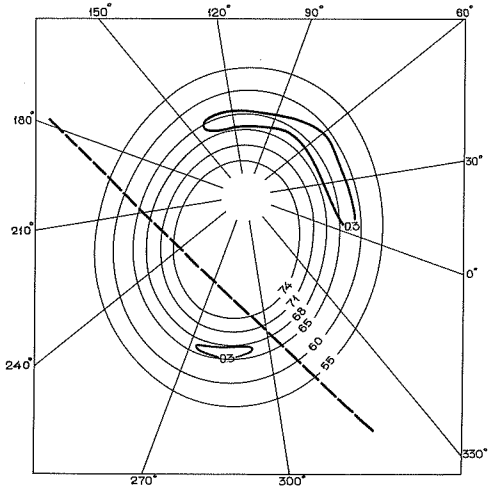

AUGUST 26, 1964, 0800 UT

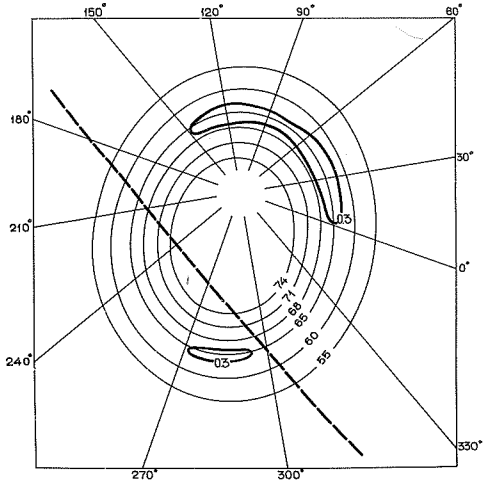

AUGUST 26, 1964, 0815 UT

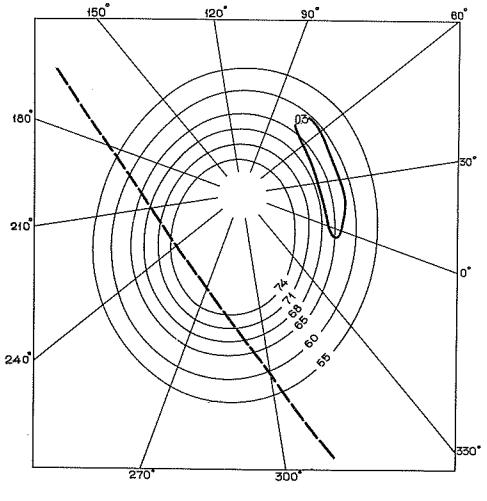

AUGUST 26, 1964, 0830 UT

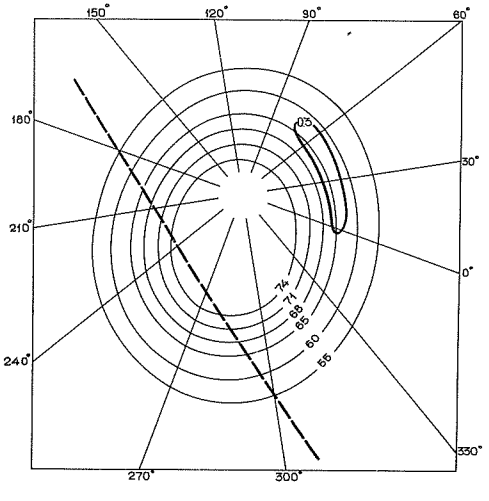

CONTOUR PLOT OF AURORAL ABSORPTION
OCTOBER 9,1964 0755 UT

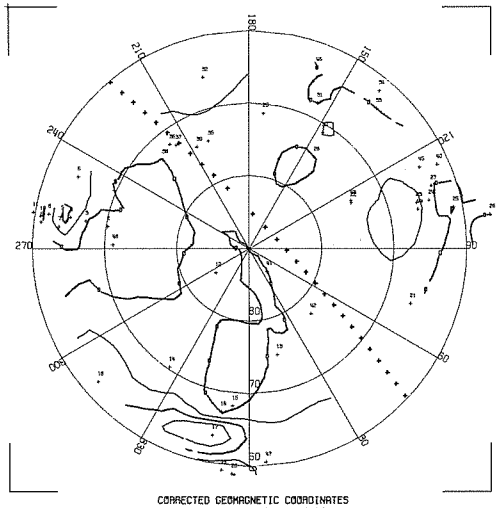

CORRECTED GEOMAGNETIC COORDINATES
CONTOUR INTERVAL = 0.5 DB

CONTOUR PLOT OF AURORAL ABSORPTION
OCTOBER 9,1964 0805 UT

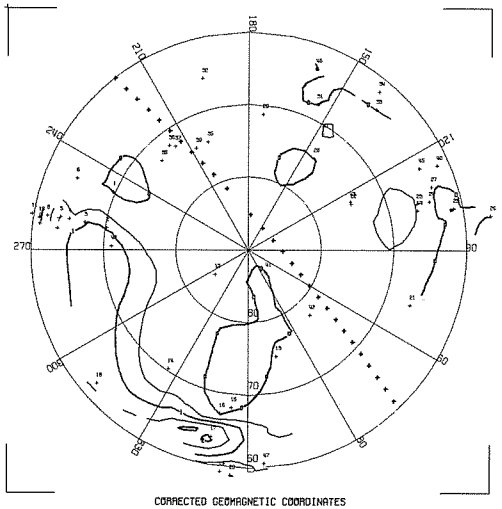

CORRECTED GEOMAGNETIC COORDINATES
CONTOUR INTERVAL = 0.5 DB

CONTOUR PLOT OF AURORAL ABSORPTION
OCTOBER 9,1964 0815 UT

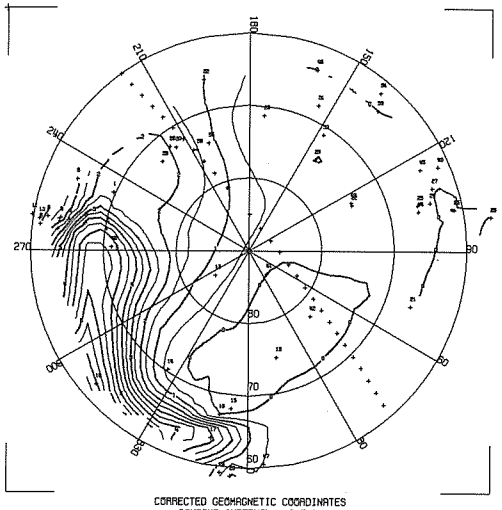

CORRECTED GEOMAGNETIC COORDINATES
CONTOUR INTERVAL = 0.5 DB

CONTOUR PLOT OF AURORAL ABSORPTION
OCTOBER 9,1964 0825 UT

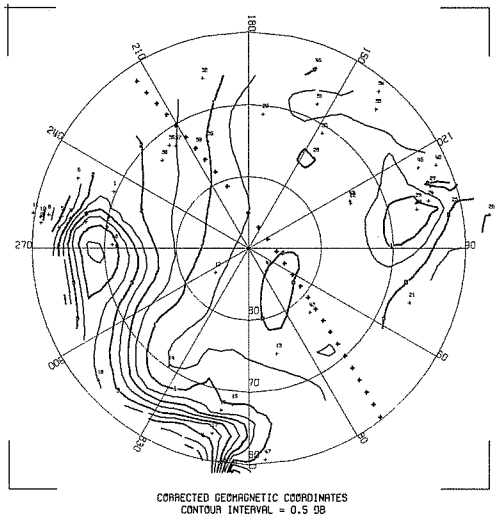

CORRECTED GEOMAGNETIC COORDINATES
CONTOUR INTERVAL = 0.5 DB

CONTOUR PLOT OF AURORAL ABSORPTION
OCTOBER 9,1964 0845 UT

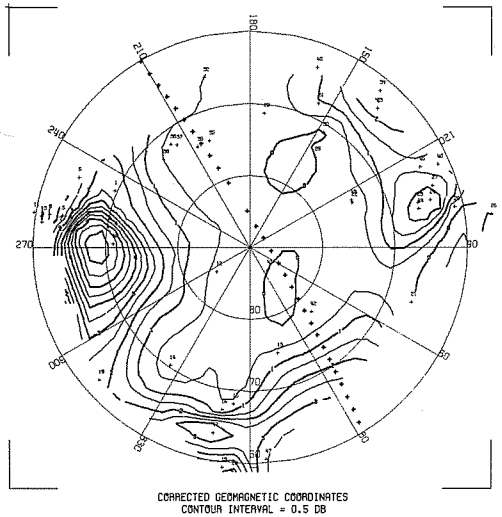

CORRECTED GEOMAGNETIC COORDINATES
CONTOUR INTERVAL = 0.5 DB

CONTOUR PLOT OF AURORAL ABSORPTION
OCTOBER 9,1964 0900 UT

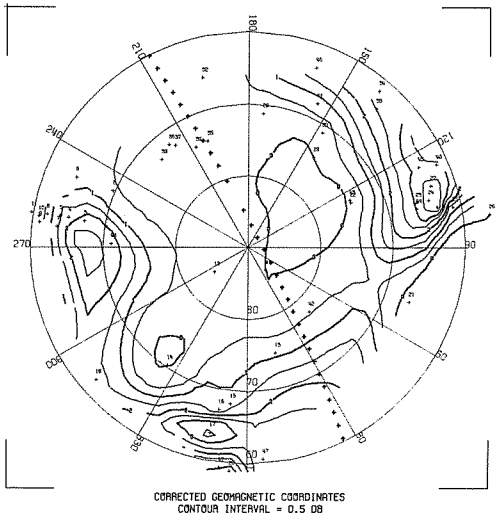

CORRECTED GEOMAGNETIC COORDINATES
CONTOUR INTERVAL = 0.5 DB

CONTOUR PLOT OF AURORAL ABSORPTION
OCTOBER 9,1964 0920 UT

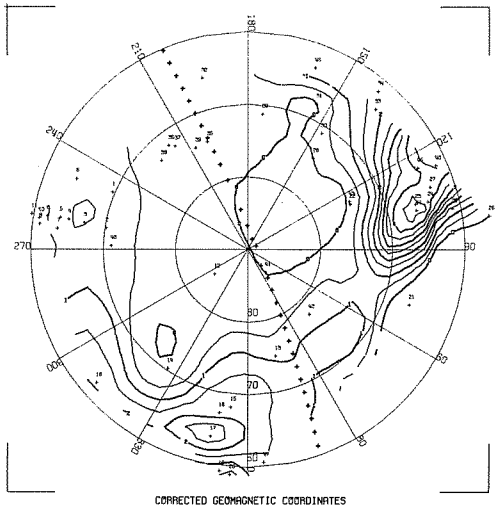

CORRECTED GEOMAGNETIC COORDINATES
CONTOUR INTERVAL = 0.5 DB

CONTOUR PLOT OF AURORAL ABSORPTION
OCTOBER 9,1964 0935 UT

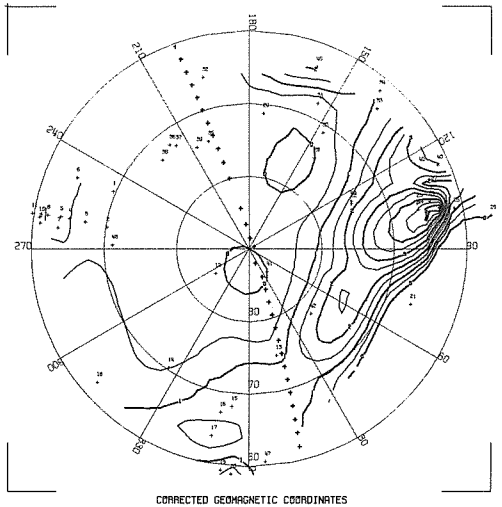

CORRECTED GEOMAGNETIC COORDINATES
CONTOUR INTERVAL = 0.5 DB

CONTOUR PLOT OF AURORAL ABSORPTION
OCTOBER 9,1964 0950 UT

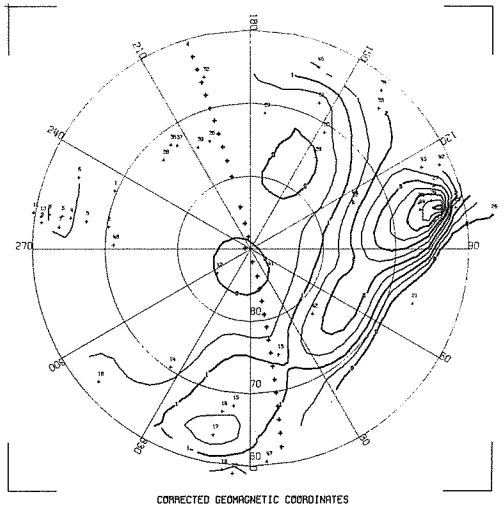

CORRECTED GEOMAGNETIC COORDINATES
CONTOUR INTERVAL = 0.5 DB

CONTOUR PLOT OF AURORAL ABSORPTION
OCTOBER 9,1964 1010 UT

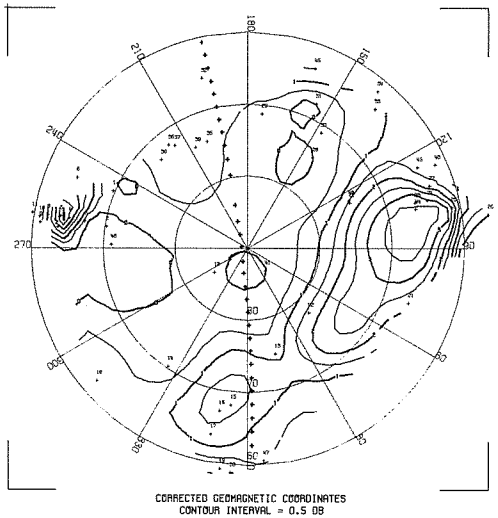

CORRECTED GEOMAGNETIC COORDINATES
CONTOUR INTERVAL = 0.5 DB

CONTOUR PLOT OF AURORAL ABSORPTION
OCTOBER 9,1964 1035 UT

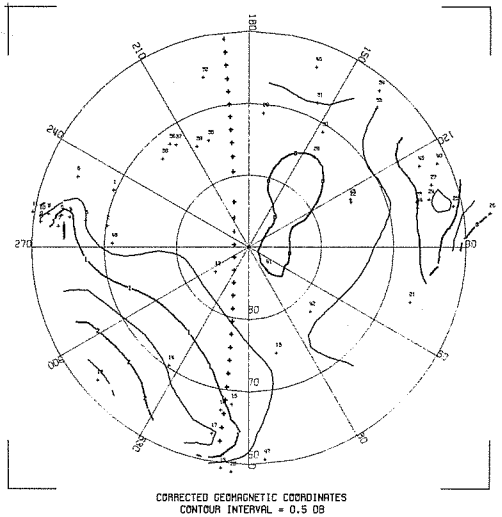

CORRECTED GEOMAGNETIC COORDINATES
CONTOUR INTERVAL = 0.5 DB

STATION IDENTIFICATION FOR IQSY COMPUTER GENERATED MAPS

1	POINT BARROW	69.70N	247.00E
2	BAR 1	70.20	261.30
3	FORT YUKON	67.10	260.70
4	COLLEGE	64.90	260.30
5	HEALY	63.70	260.20
6	KOTZEBUE	64.40	247.50
8	TALKEETNA	61.90	260.40
10	ANCHORAGE	60.80	261.30
12	RESOLUTE BAY	84.30	306.00
13	FROBISHER BAY	74.90	14.70
14	FORT CHURCHILL	70.30	325.90
15	GREAT WHALE	68.20	353.80
16	CAPE JONES	67.20	350.10
17	MOOSONEE	63.80	348.70
18	PRINCE ALBERT	62.20	311.20
19	VAL D OR	59.30	352.70
20	OTTAWA	58.90	355.40
21	REYKJAVIK	66.50	71.50
22	ISFJORD	74.60	113.90
23	TROMSO	66.00	105.20
24	KIRUNA	64.30	104.30
25	LYCKSELE	61.20	101.40
26	UPPSALA	56.40	98.00
27	SODANKYLA	63.40	108.90
28	HEISS ISLAND	74.60	144.30
29	CAPE CHELYUSKIN	71.30	173.90
30	CAPE ZHELANIA	71.10	147.50
31	DIXSON ISLAND	67.90	154.70
32	TIXIE BAY	65.60	195.20
33	AMDERMA	63.90	137.50
34	SALEKHARD	61.80	140.40
35	NP-13 (NOV 65)	74.20	200.80
36	NP-13 (JAN 65)	72.00	217.50
37	NP-13 (MAR 65)	72.60	215.40
38	NP-13 (OCT 64)	72.90	224.40
39	NP-13 (AUG 65)	74.30	207.40
40	APPATITY	61.60	114.00
41	THULE	86.00	37.80
43	LONGYEARBYEN	74.50	115.20
45	LOPARASKAYA	64.00	115.50
46	NORILSK	63.40	159.50
47	BAIE ST. PAUL	60.60	4.40

OCTOBER 18, 1964, 2224 UT

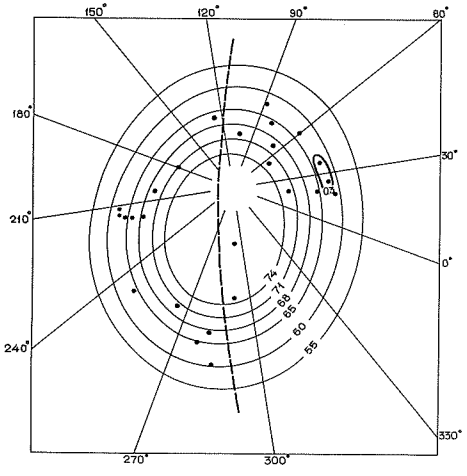

OCTOBER 18, 1964, 2239 UT

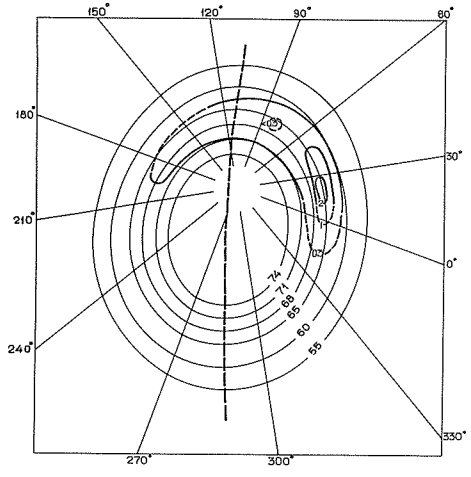

OCTOBER 18, 1964, 2254 UT

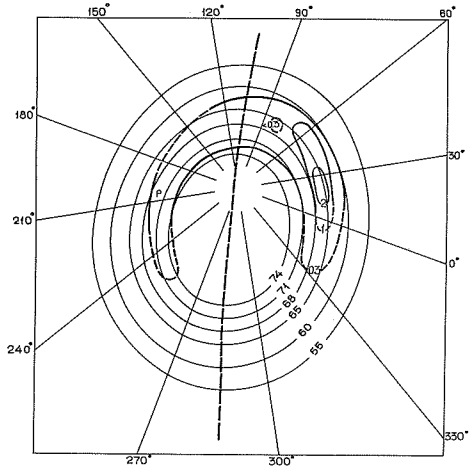

OCTOBER 18, 1964, 2319 UT

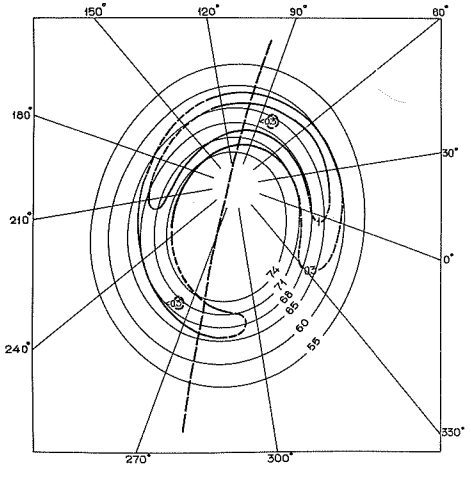

OCTOBER 18, 1964, 2334 UT

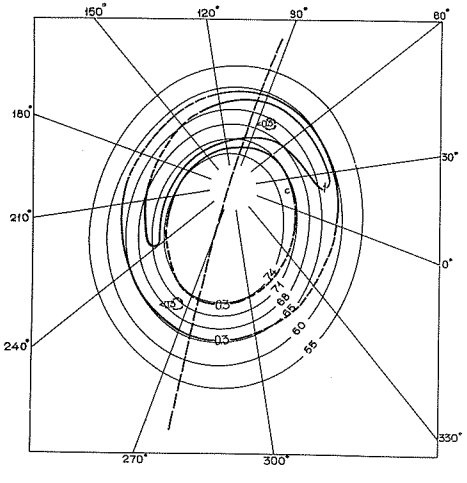

OCTOBER 18, 1964, 2344 UT

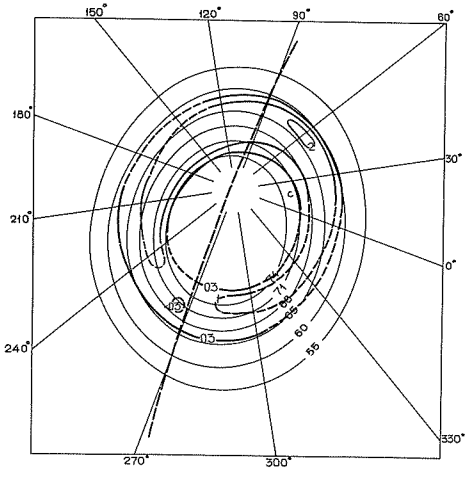

OCTOBER 18, 1964, 2349 UT

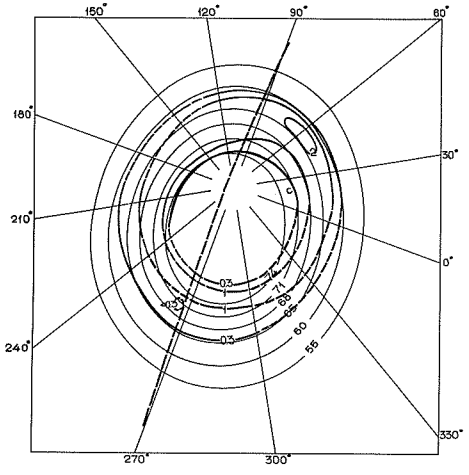

OCTOBER 19, 1964, 0004 UT

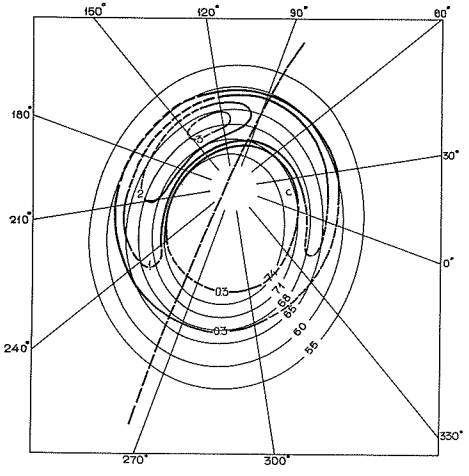

OCTOBER 19, 1964, 0019 UT

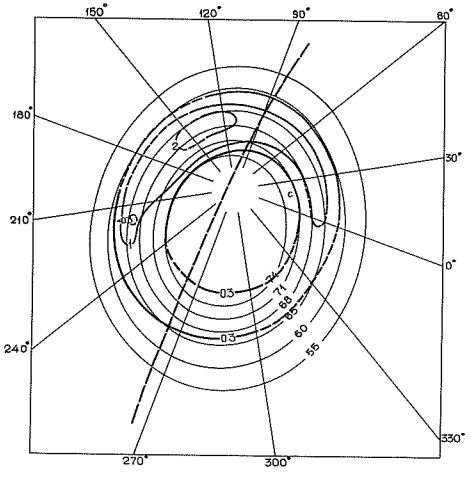

OCTOBER 19, 1964, 0034 UT

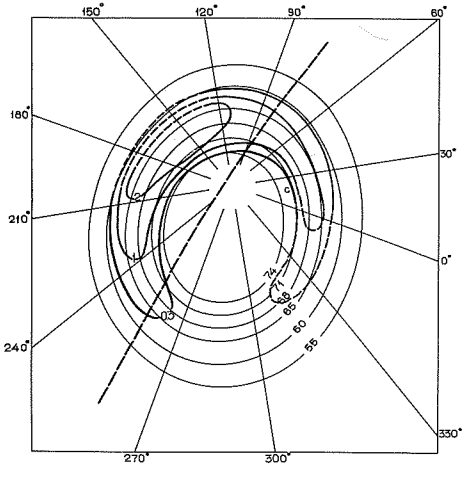

OCTOBER 19, 1964, 0049 UT

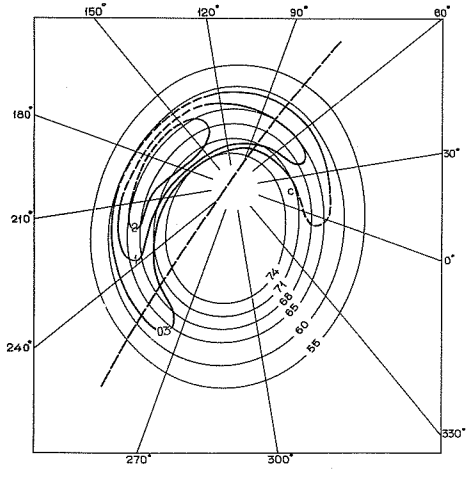

OCTOBER 19, 1964, 0104 UT

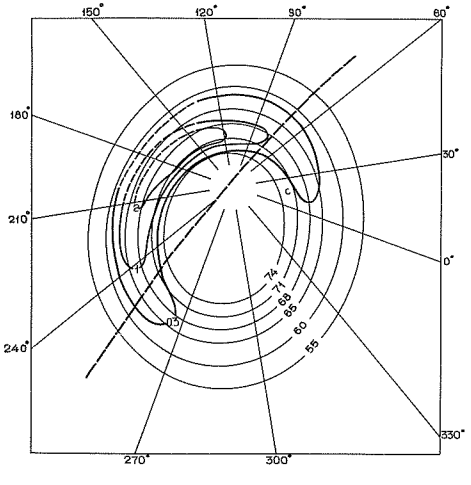

DECEMBER 1, 1964, 0745 UT

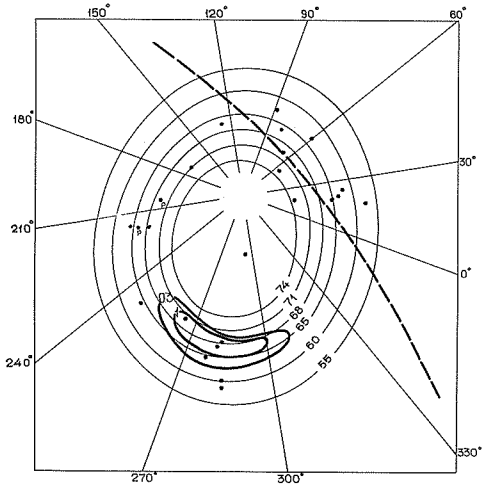

DECEMBER 1, 1964, 0800 UT

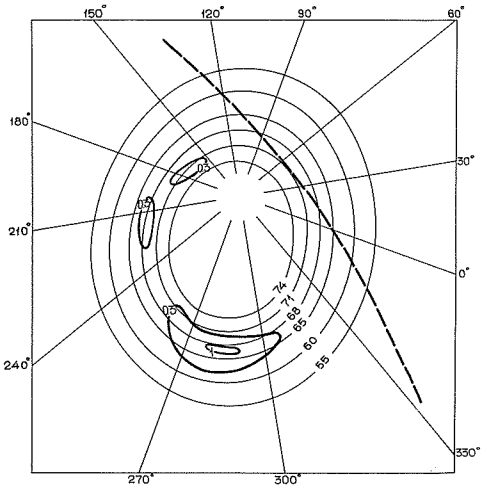

DECEMBER 1, 1964, 0815 UT

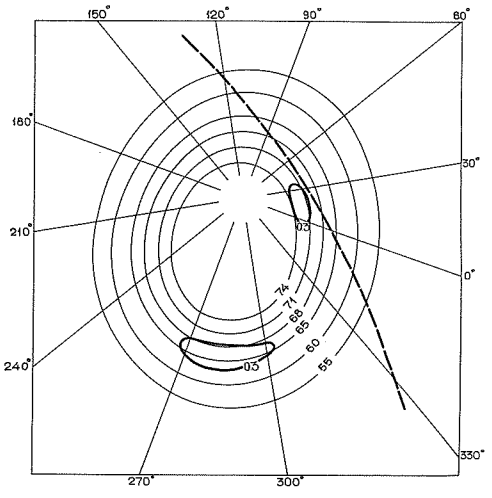

DECEMBER 1, 1964, 0830 UT

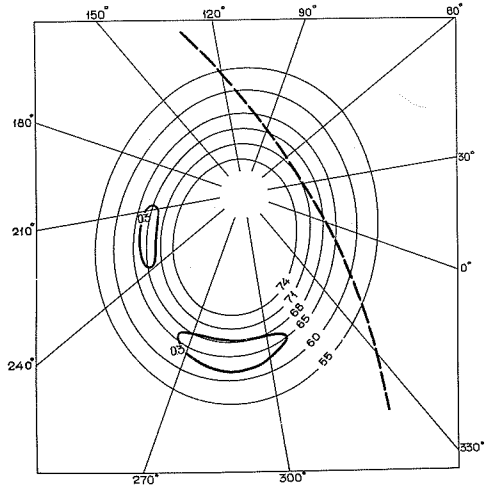

DECEMBER 1, 1964, 0845 UT

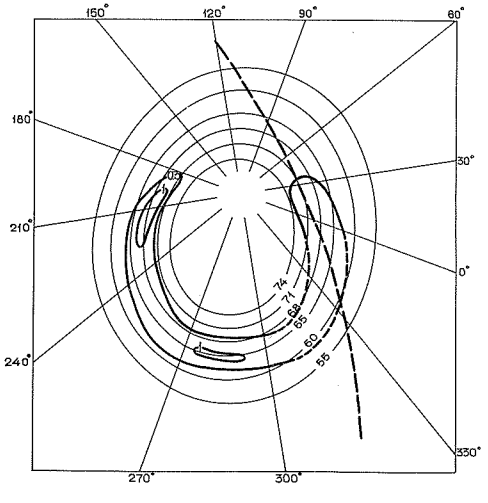

DECEMBER 1, 1964, 0900 UT

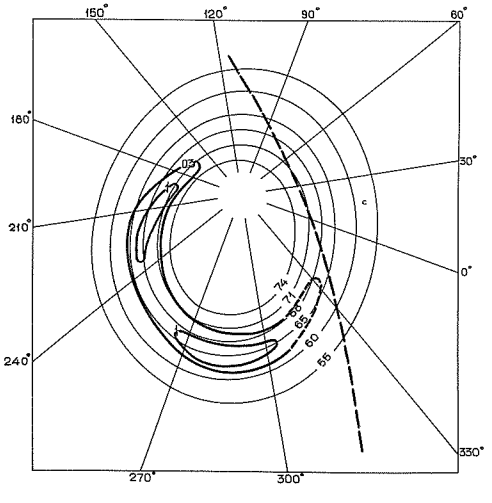

DECEMBER 1, 1964, 0915 UT

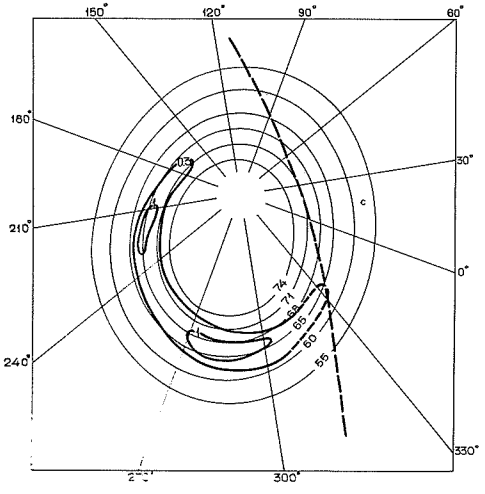

DECEMBER 1, 1964, 0930 UT

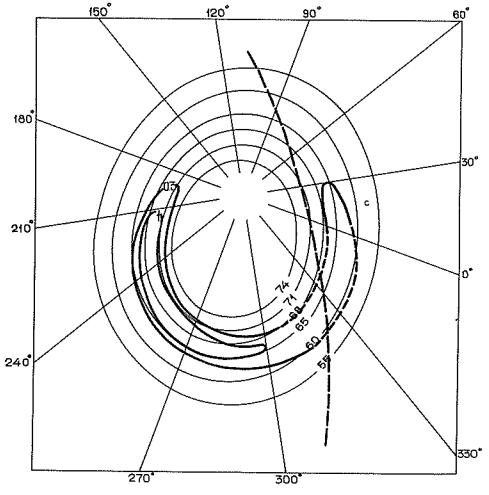

DECEMBER 1, 1964, 0945 UT

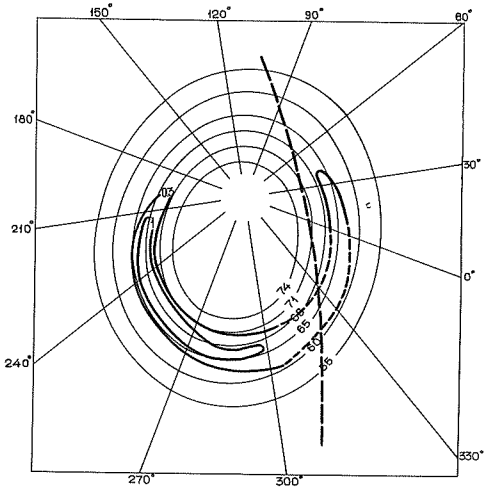

DECEMBER 1, 1964, 1000 UT

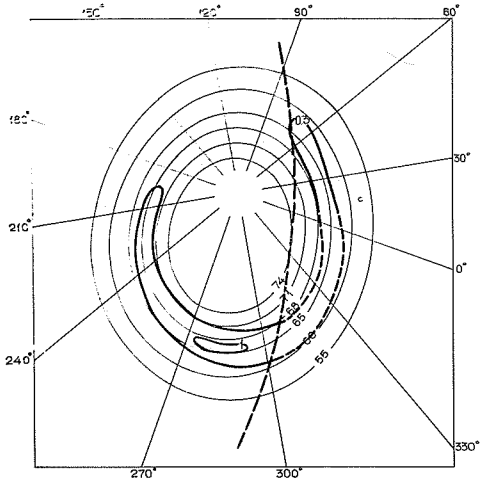

DECEMBER 1, 1964, 1015 UT

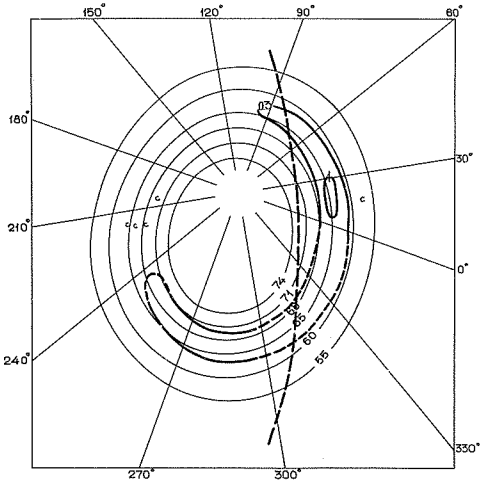

DECEMBER 1, 1964, 1030 UT

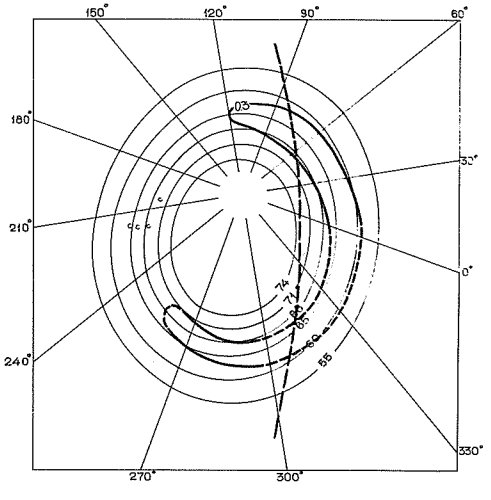

December 16, 1964, 1300 UT

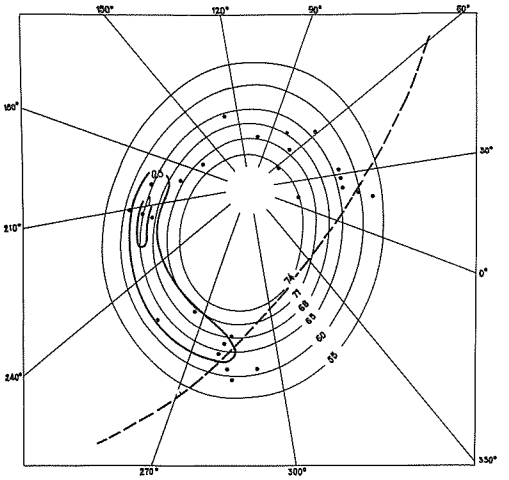

December 16, 1964, 1315 UT

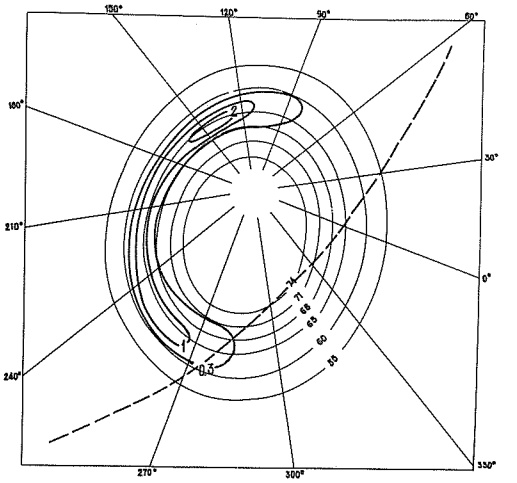

December 16, 1964, 1330 UT

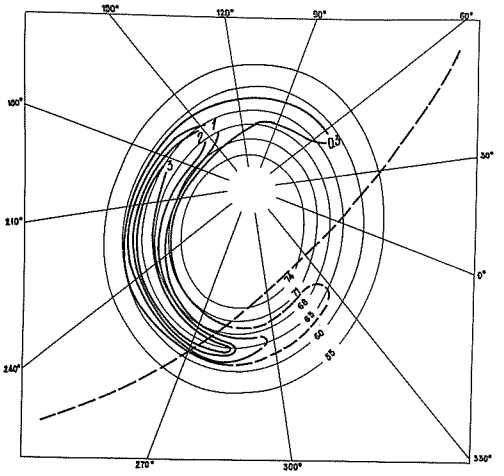

December 16, 1964, 1345 UT

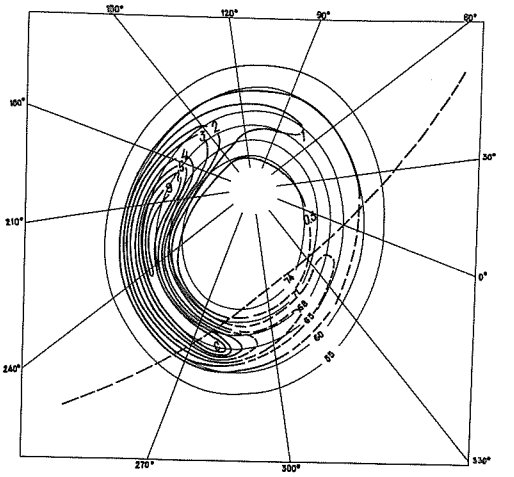

December 16, 1964, 1400 UT

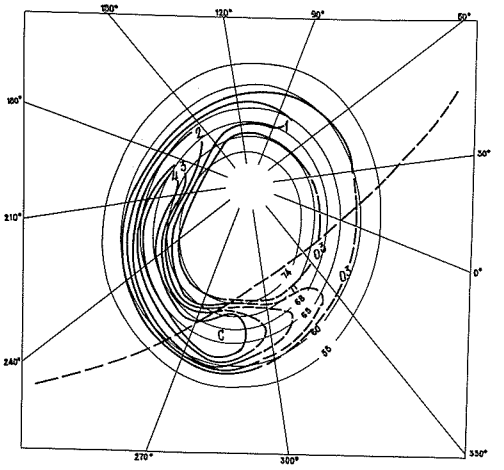

December 16, 1964 1415 UT

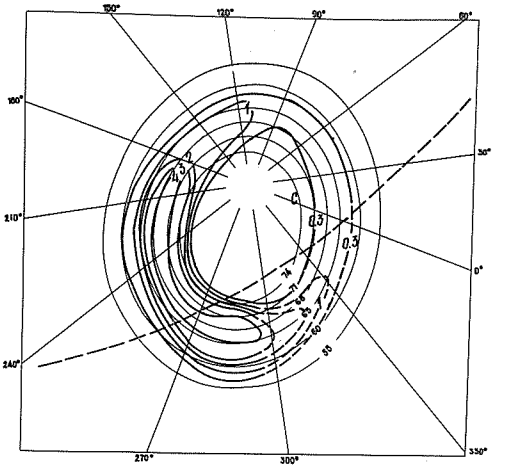

December 16, 1964 . 1430 UT

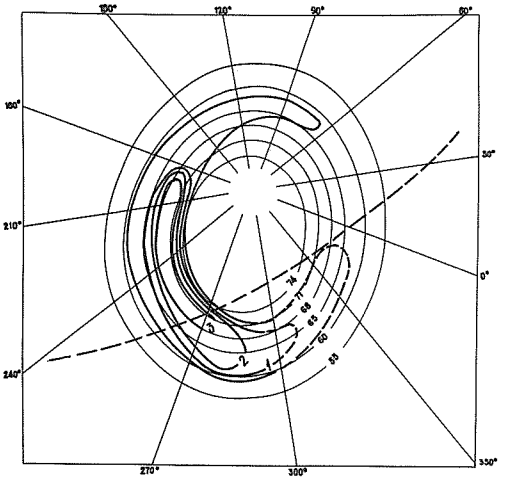

December 16, 1964 1445 UT

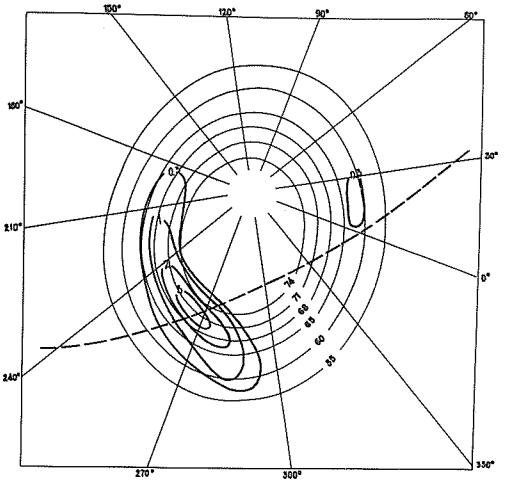

December 16, 1964 1500 UT

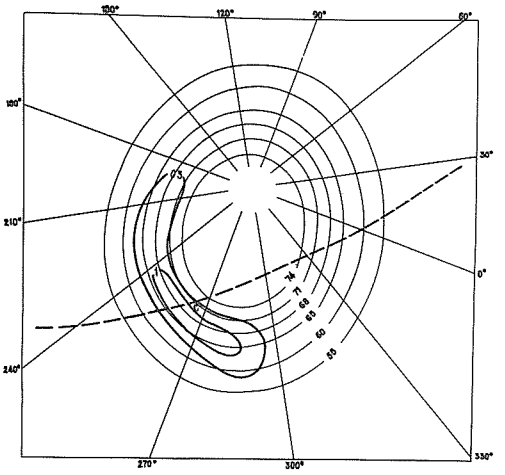

December 16, 1964 1515 UT

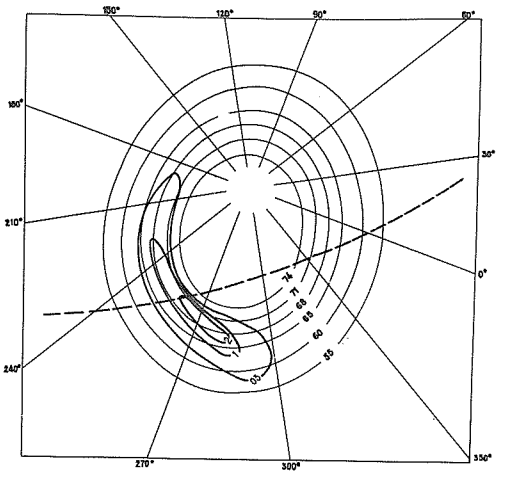

DECEMBER 17, 1964, 0045 UT

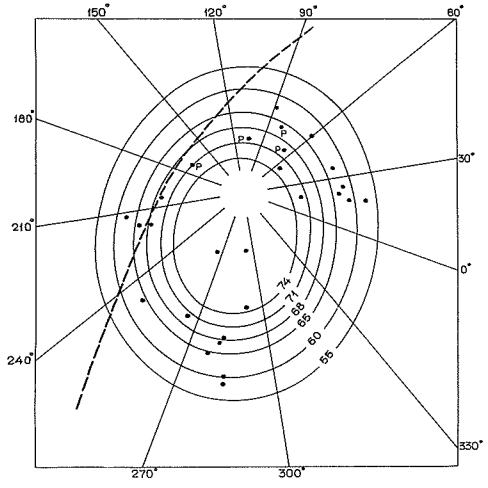

DECEMBER 17, 1964, 0100 UT

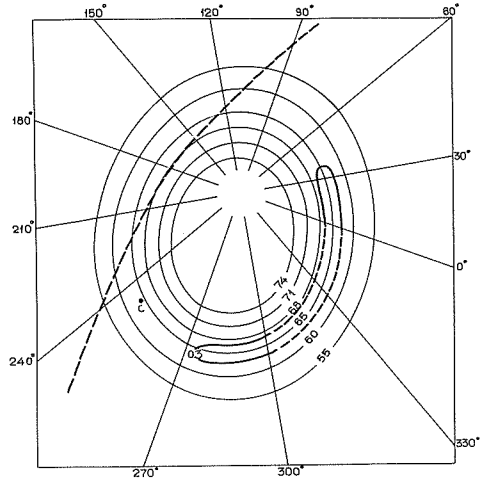

DECEMBER 17, 1964, 0115 UT

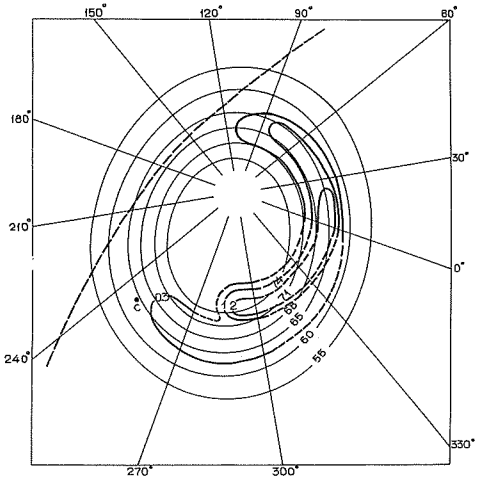

DECEMBER 17, 1964, 0130 UT

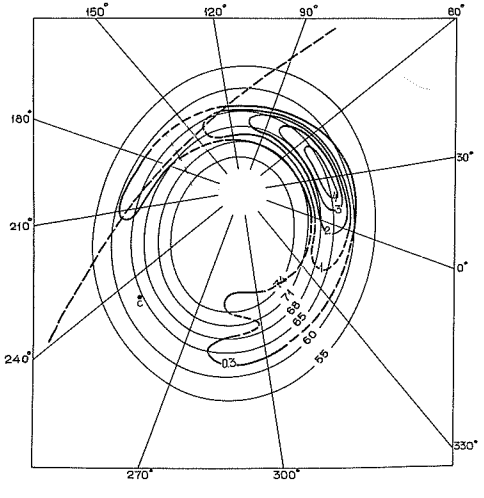

DECEMBER 17, 1964, 0145 UT

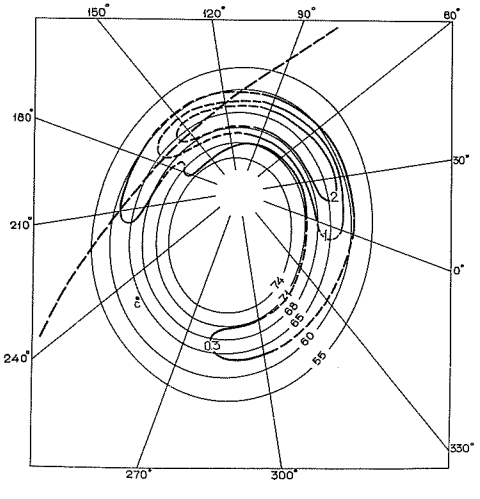

DECEMBER 17, 1964, 0200 UT

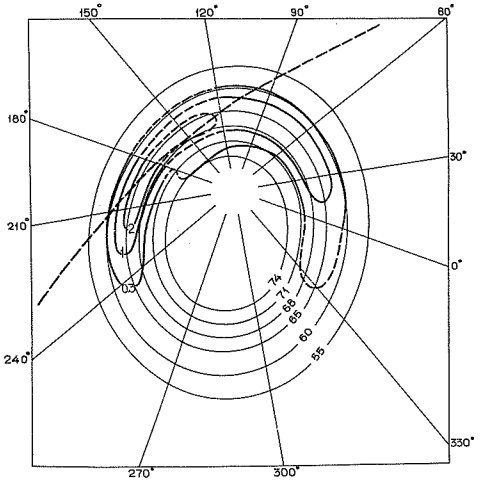

DECEMBER 17, 1964, 0215 UT

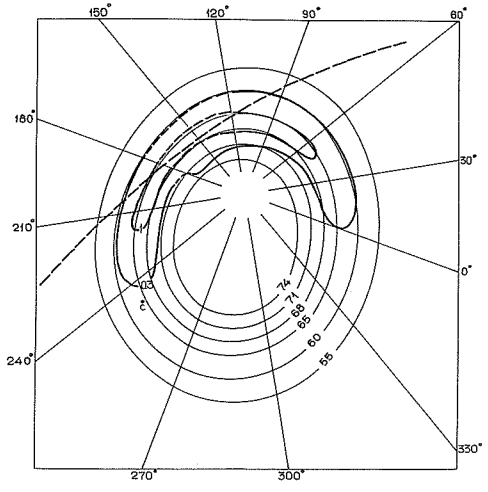

DECEMBER 17, 1964, 0230 UT

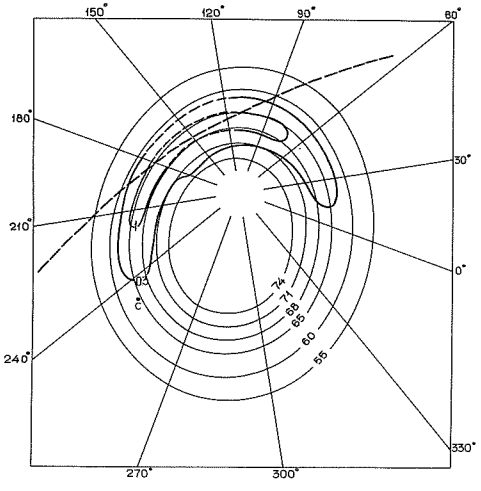

DECEMBER 17, 1964, 0245 UT

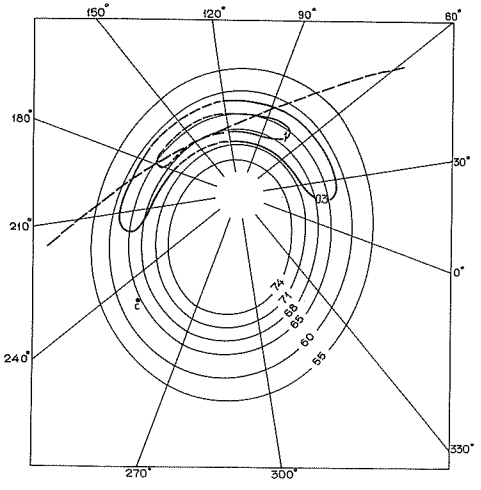

DECEMBER 17, 1964, 0300 UT

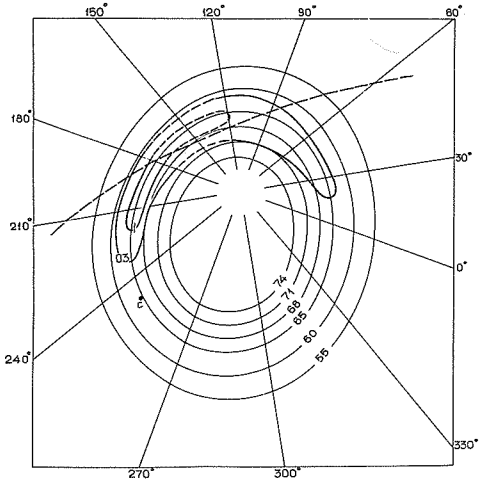

DECEMBER 17, 1964, 0315 UT

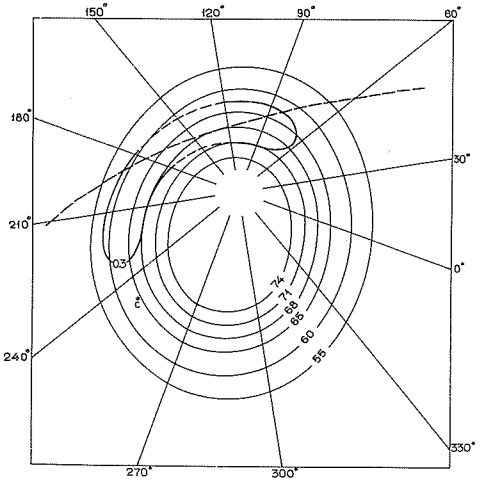

DECEMBER 17, 1964, 0330 UT

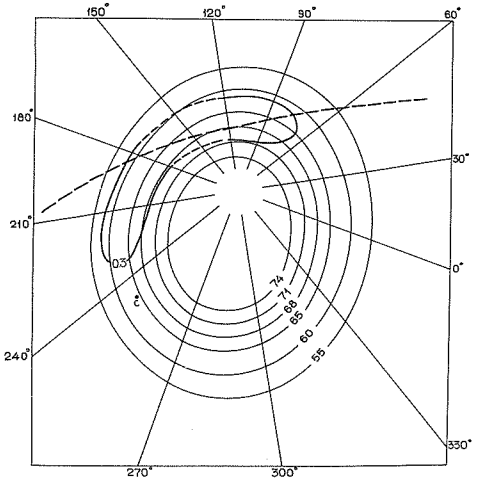

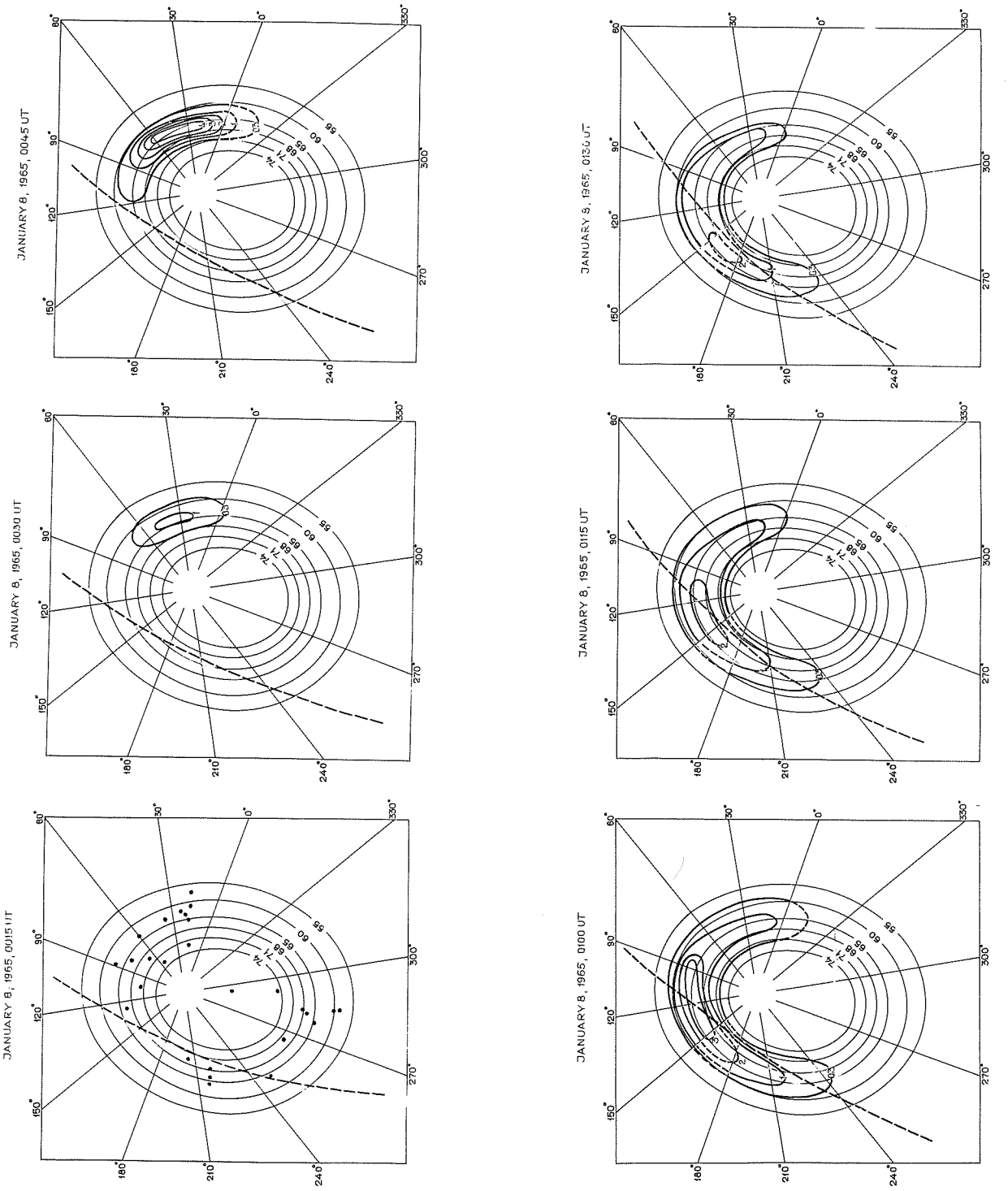
JANUARY 8, 1965, 0045 UT
JANUARY 8, 1965, 0030 UT
JANUARY 8, 1965, 0015 UT
JANUARY 8, 1965, 0130 UT
JANUARY 8, 1965, 0115 UT
JANUARY 8, 1965, 0100 UT

JANUARY 8, 1965, 0145 UT

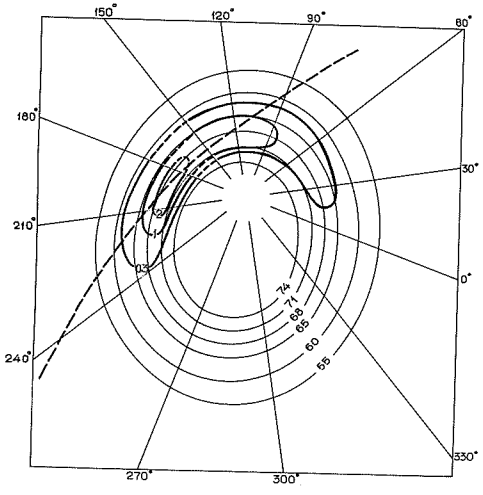

JANUARY 8, 1965, 0200 UT

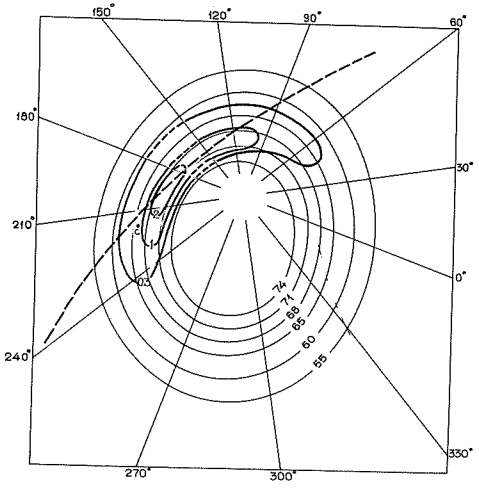

JANUARY 8, 1965, 0215 UT

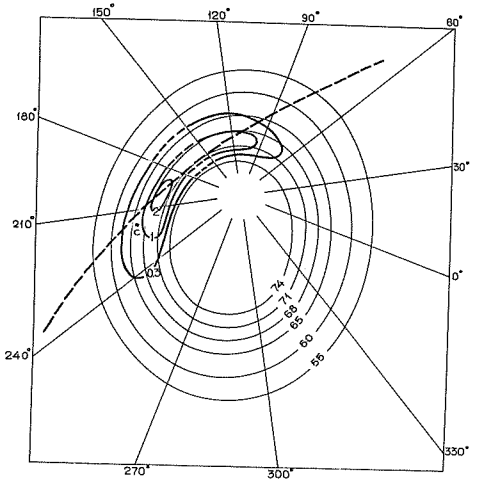

JANUARY 8, 1965, 0230 UT

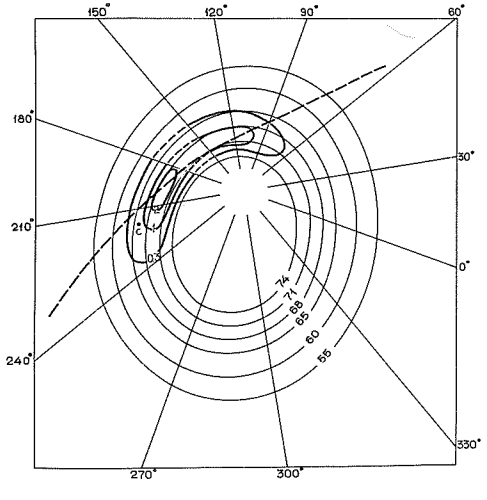

JANUARY 8, 1965, 0245 UT

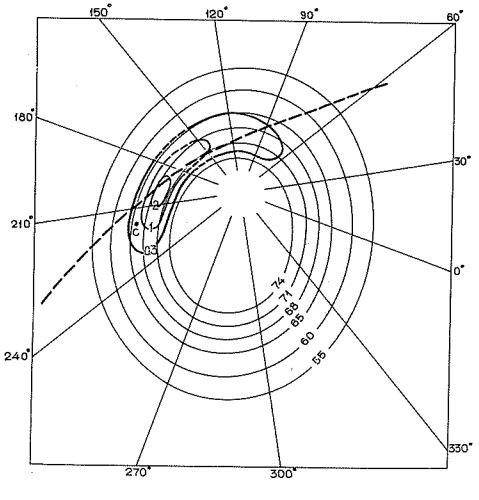

JANUARY 8, 1965, 0300 UT

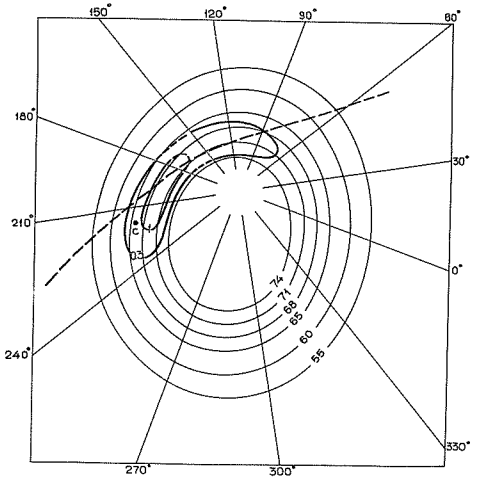

CONTOUR PLOT OF AURORAL ABSORPTION
JANUARY 14,1965 1120 UT

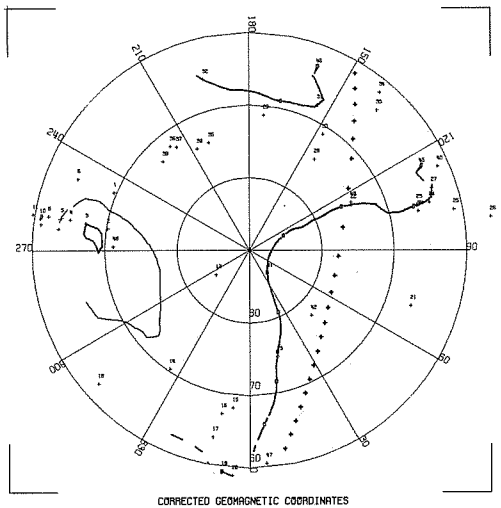

CORRECTED GEOMAGNETIC COORDINATES
CONTOUR INTERVAL = 0.5 DB

CONTOUR PLOT OF AURORAL ABSORPTION
JANUARY 14,1965 1130 UT

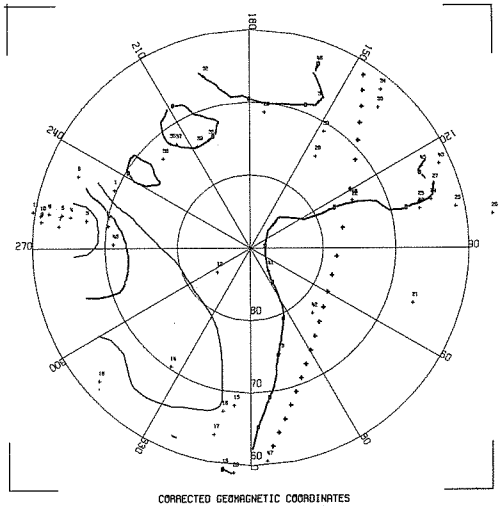

CORRECTED GEOMAGNETIC COORDINATES
CONTOUR INTERVAL = 0.5 DB

CONTOUR PLOT OF AURORAL ABSORPTION
JANUARY 14,1965 1140 UT

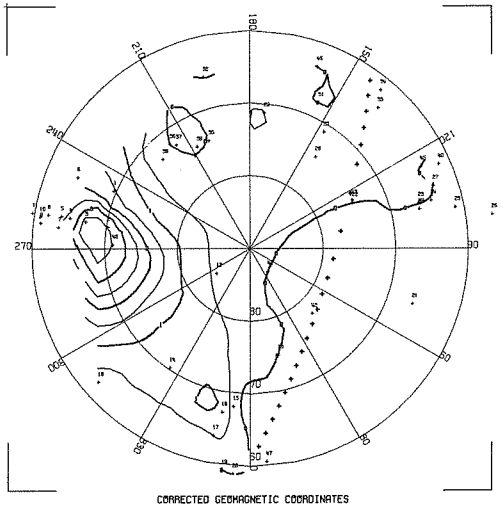

CORRECTED GEOMAGNETIC COORDINATES
CONTOUR INTERVAL = 0.5 DB

CONTOUR PLOT OF AURORAL ABSORPTION
JANUARY 14,1965 1155 UT

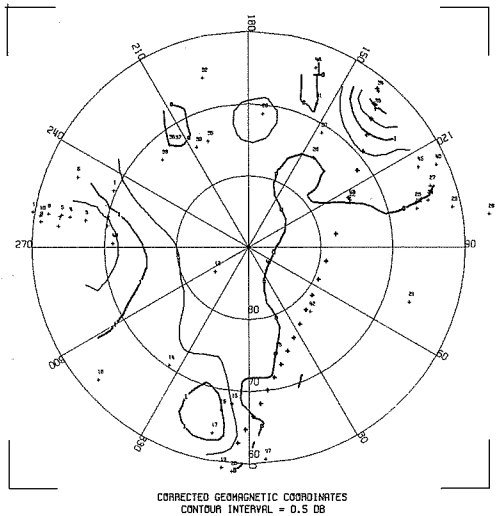

CORRECTED GEOMAGNETIC COORDINATES
CONTOUR INTERVAL = 0.5 DB

CONTOUR PLOT OF AURORAL ABSORPTION
JANUARY 14,1965 1210 UT

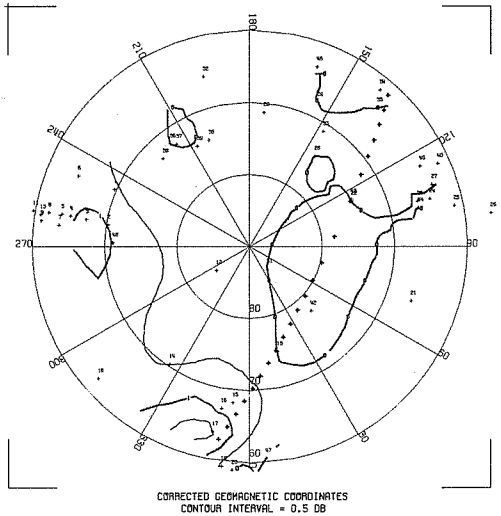

CORRECTED GEOMAGNETIC COORDINATES
CONTOUR INTERVAL = 0.5 DB

CONTOUR PLOT OF AURORAL ABSORPTION
JANUARY 14,1965 1225 UT

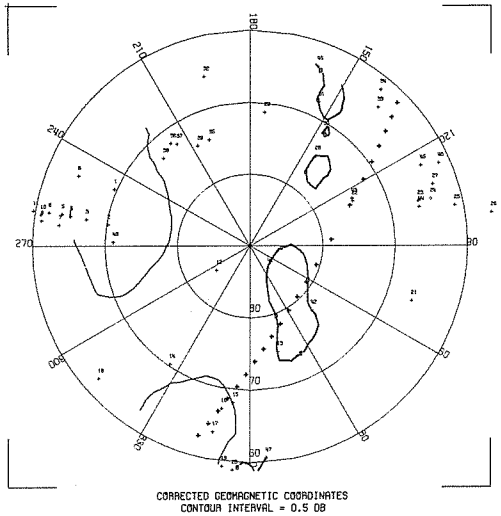

CORRECTED GEOMAGNETIC COORDINATES
CONTOUR INTERVAL = 0.5 DB

CONTOUR PLOT OF AURORAL ABSORPTION
JANUARY 14,1965 1240 UT

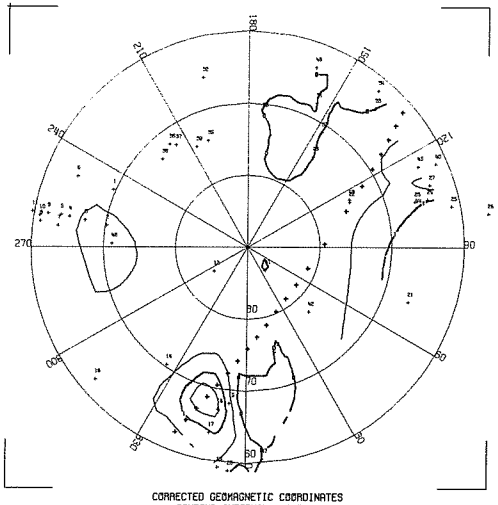

CORRECTED GEOMAGNETIC COORDINATES
CONTOUR INTERVAL = 0.5 DB

CONTOUR PLOT OF AURORAL ABSORPTION
JANUARY 14,1965 1305 UT

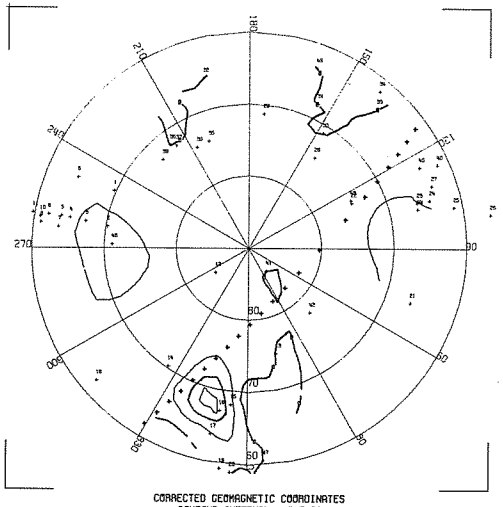

CORRECTED GEOMAGNETIC COORDINATES
CONTOUR INTERVAL = 0.5 DB

CONTOUR PLOT OF AURORAL ABSORPTION
JANUARY 14,1965 1335 UT

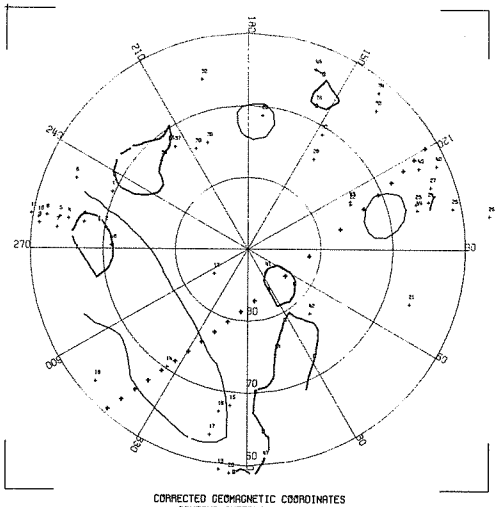

CORRECTED GEOMAGNETIC COORDINATES
CONTOUR INTERVAL = 0.5 DB

FEBRUARY 8, 1965, 2030 UT

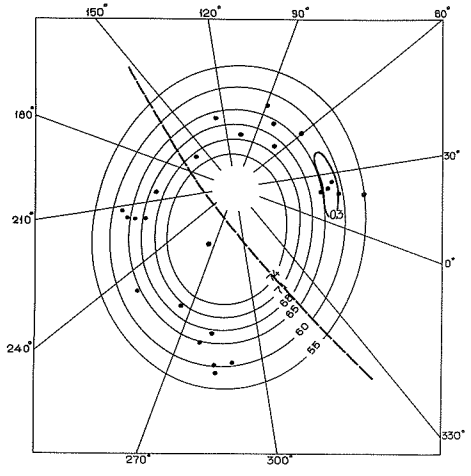

FEBRUARY 8, 1965, 2040 UT

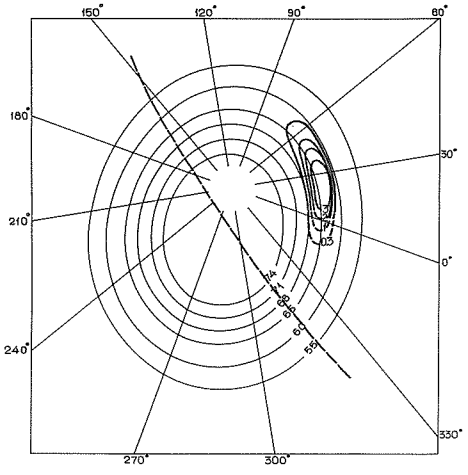

FEBRUARY 8, 1965, 2045 UT

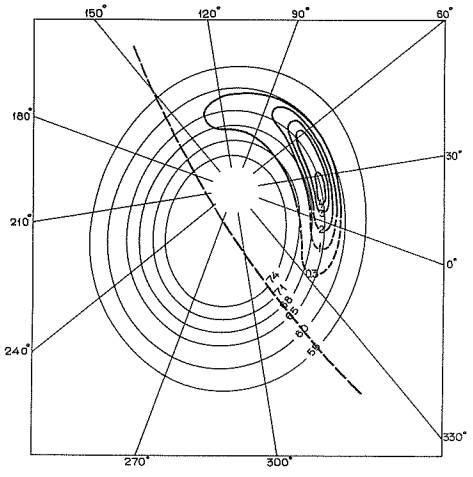

FEBRUARY 8, 1965, 2050 UT

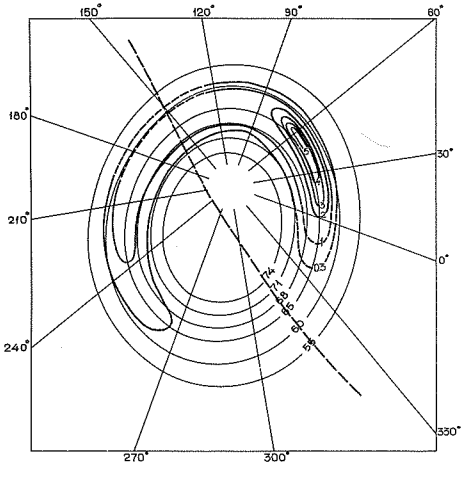

FEBRUARY 8, 1965, 2100 UT

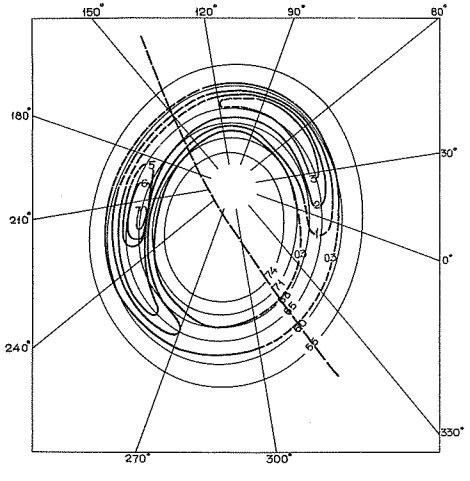

FEBRUARY 8, 1965, 2115 UT

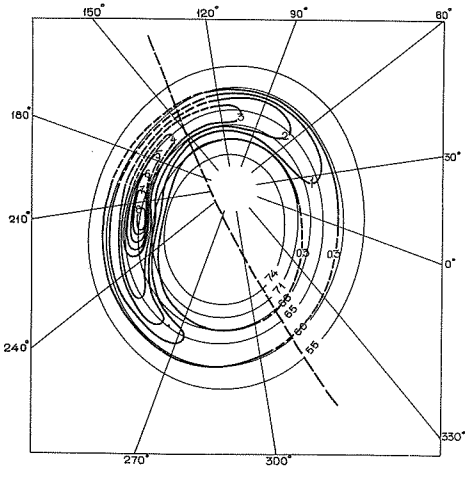

FEBRUARY 8, 1965, 2130 UT

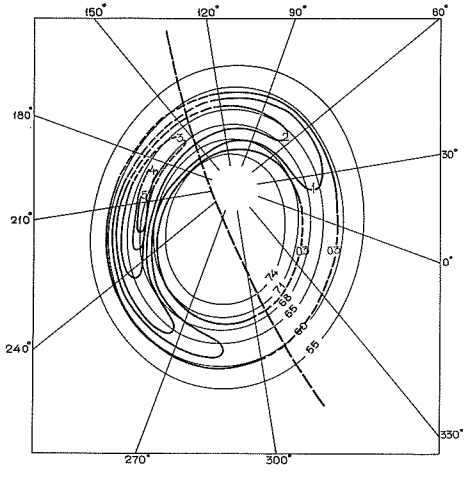

FEBRUARY 8, 1965, 2145 UT

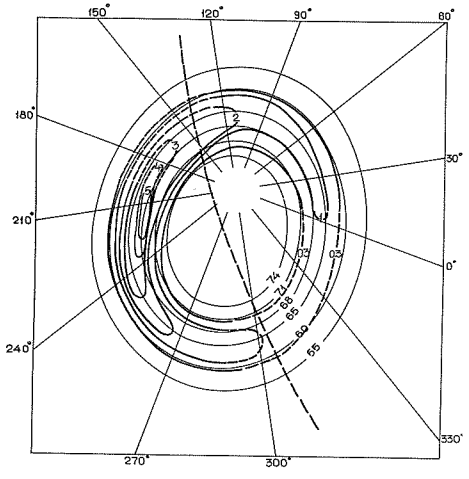

FEBRUARY 8, 1965, 2200 UT

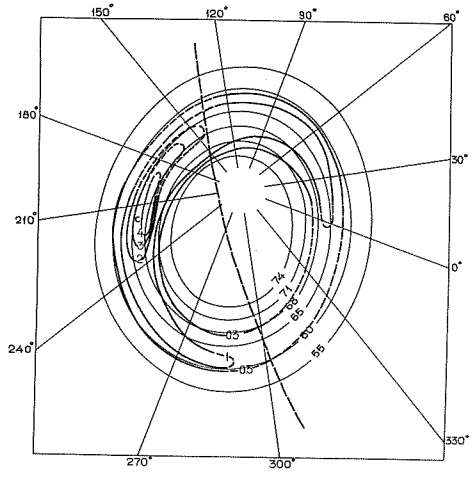

FEBRUARY 8, 1965, 2215 UT

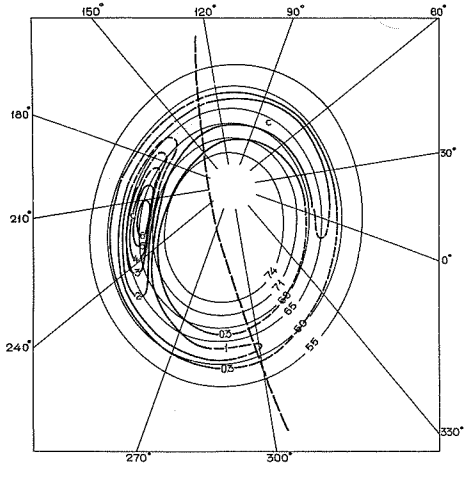

FEBRUARY 8, 1965, 2230 UT

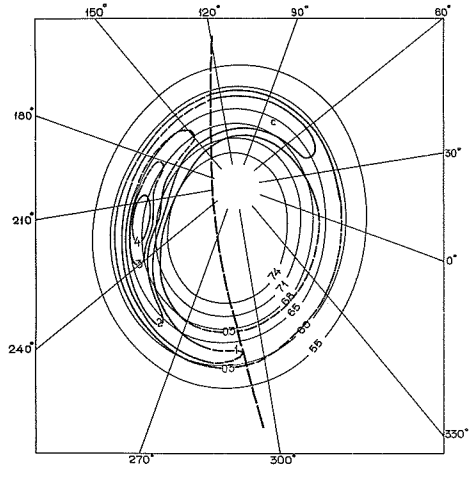

FEBRUARY 8, 1965, 2300 UT

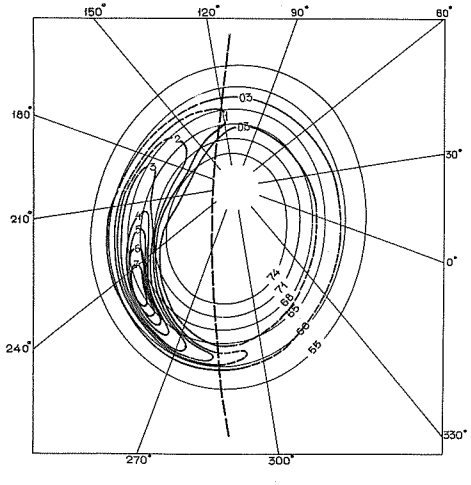

FEBRUARY 21, 1965, 0430 UT

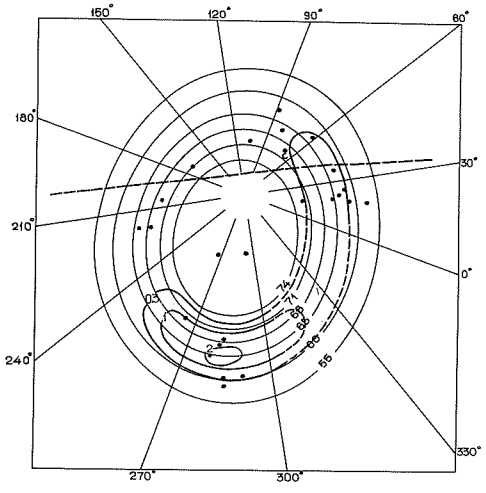

FEBRUARY 21, 1965, 0445 UT

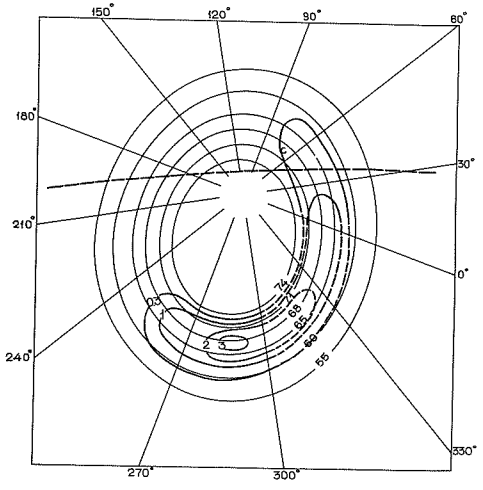

FEBRUARY 21, 1965, 0500 UT

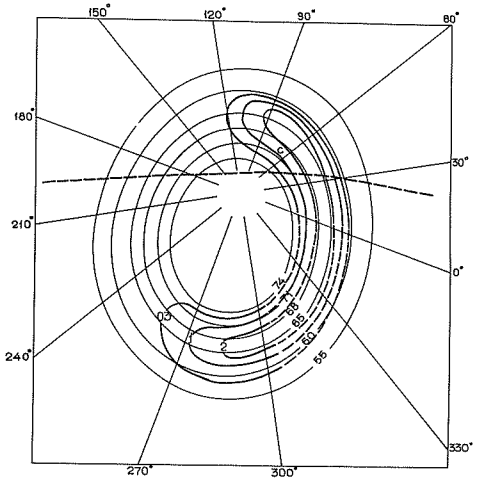

FEBRUARY 21, 1965, 0515 UT

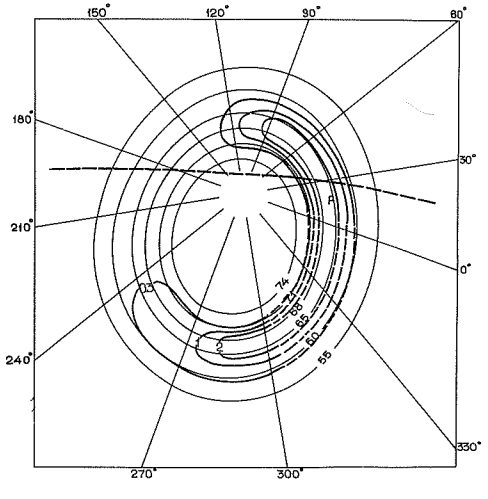

FEBRUARY 21, 1965, 0530 UT

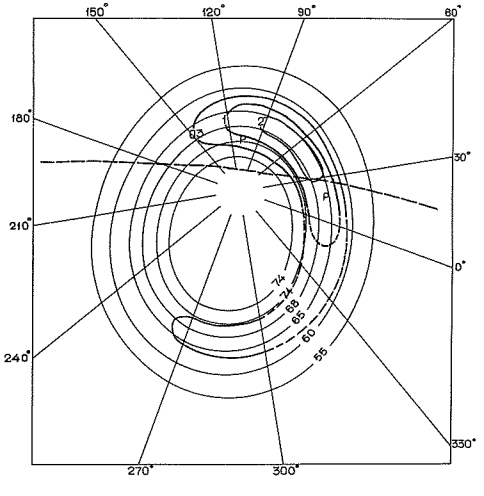

FEBRUARY 21, 1965, 0545 UT

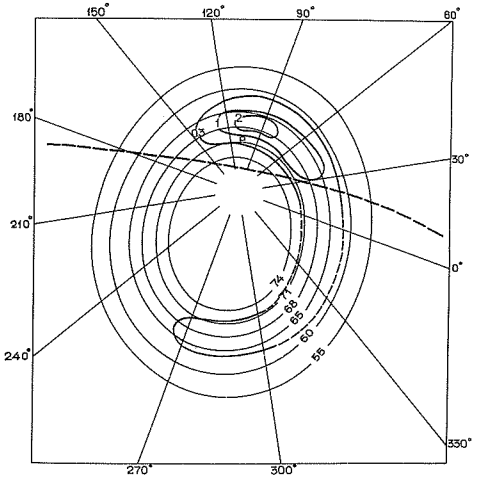

FEBRUARY 21, 1965, 0600 UT

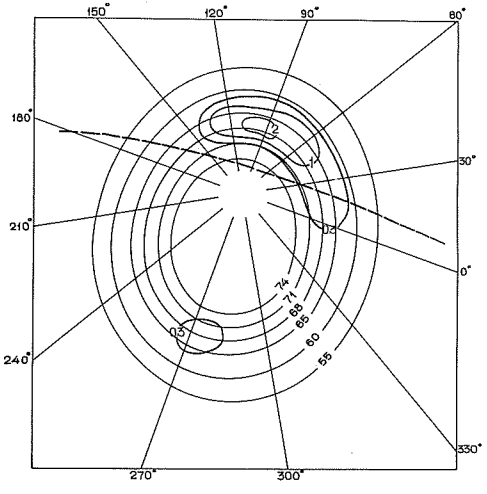

FEBRUARY 21, 1965, 0615 UT

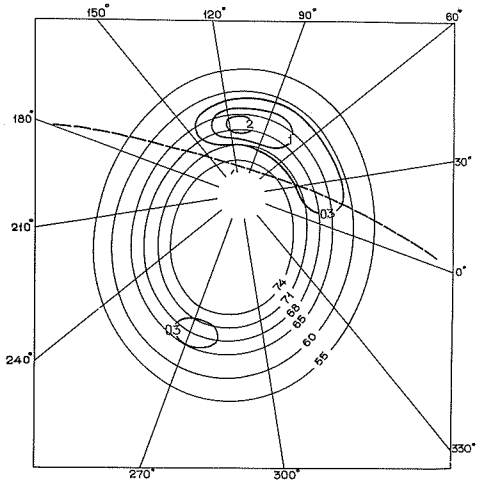

FEBRUARY 21, 1965, 0630 UT

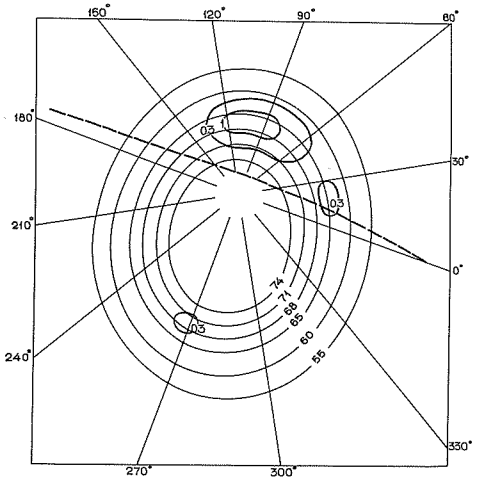

MARCH 4, 1965, 0430 UT

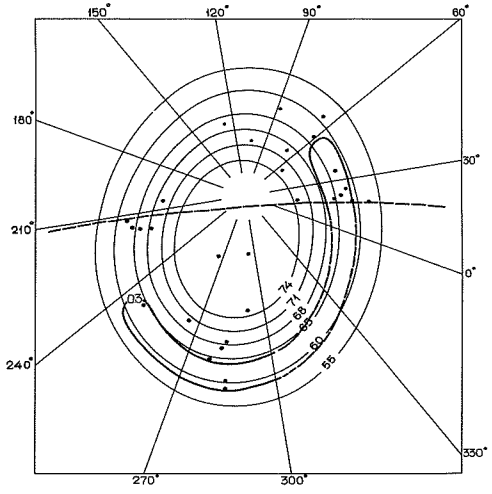

MARCH 4, 1965, 0445 UT

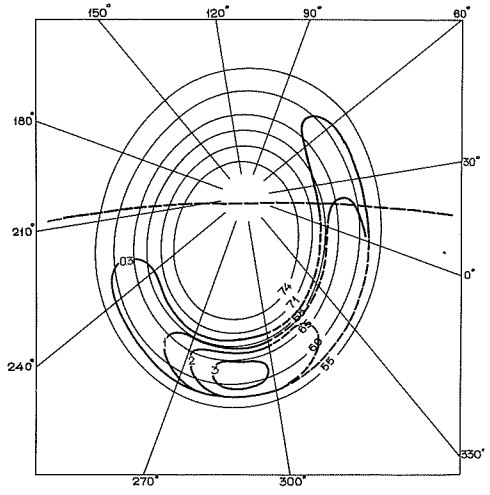

MARCH 4, 1965, 0500 UT

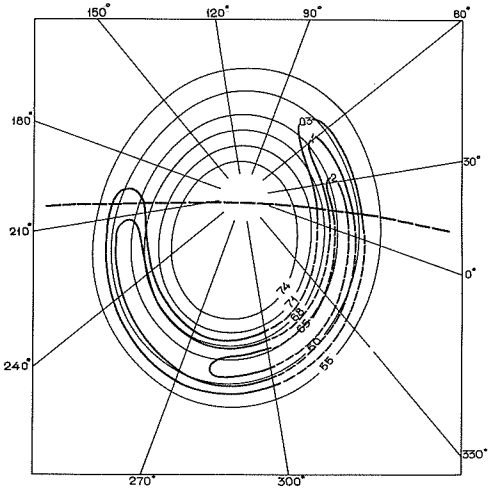

MARCH 4, 1965, 0515 UT

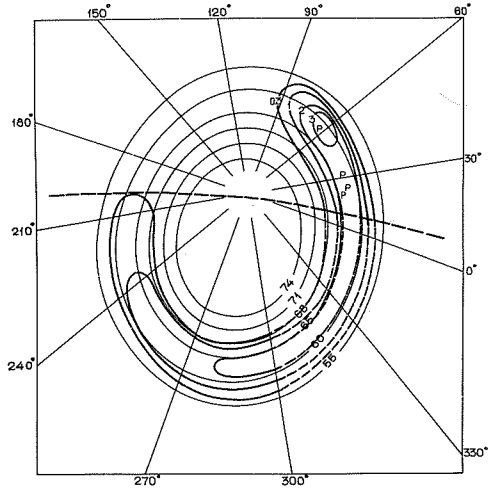

MARCH 4, 1965, 0530 UT

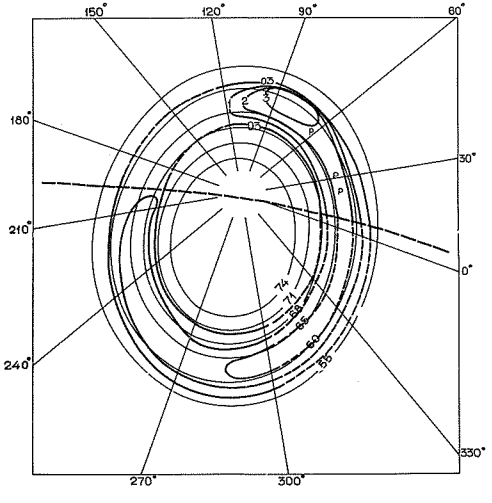

MARCH 4, 1965, 0545 UT

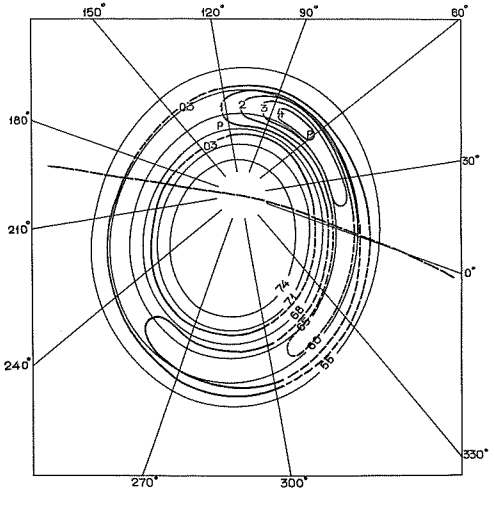

MARCH 4, 1965, 0600 UT

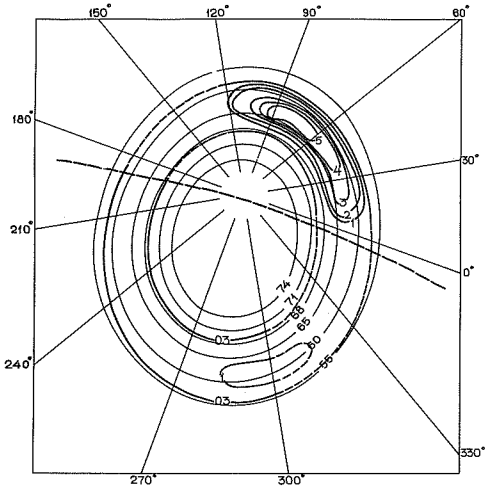

MARCH 4, 1965, 0615 UT

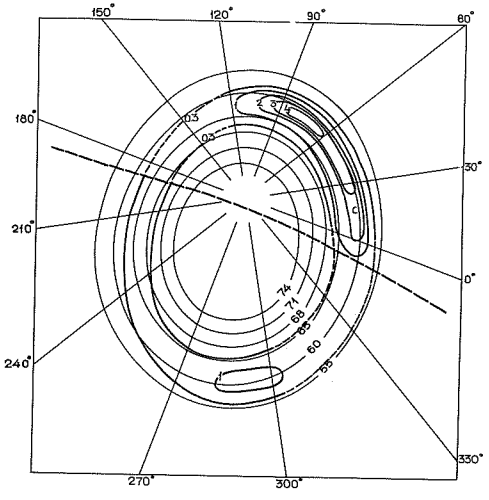

MARCH 4, 1965, 0630 UT

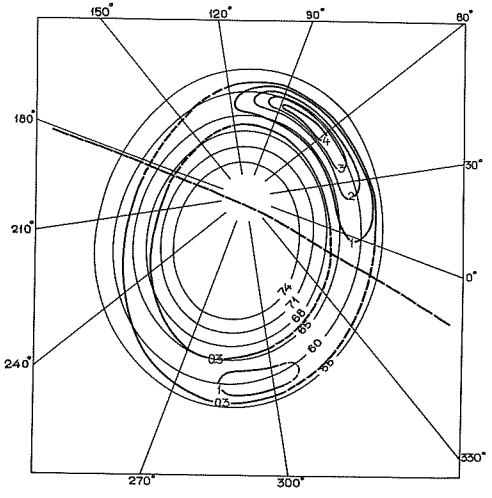

MARCH 4, 1965, 0645 UT

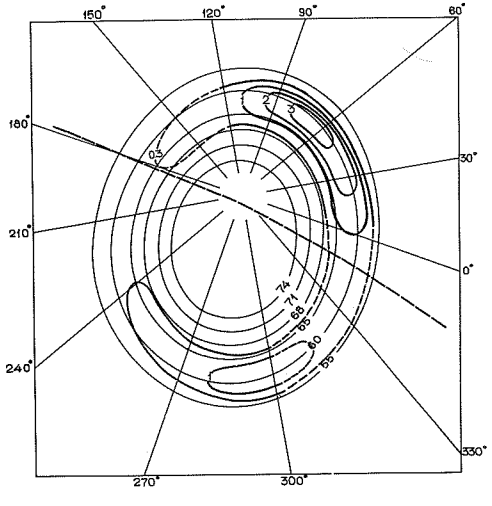

MARCH 4, 1965, 0700 UT

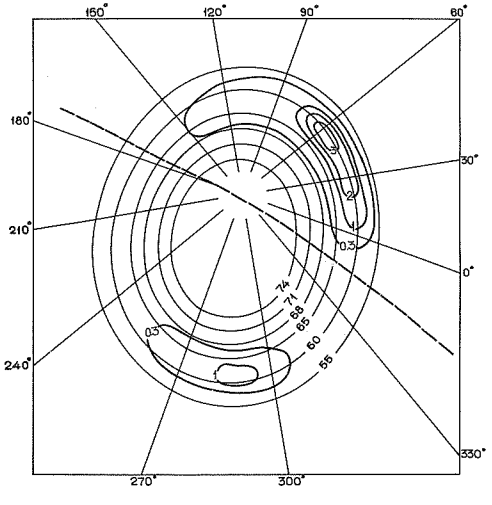

MARCH 22, 1965, 2118 UT

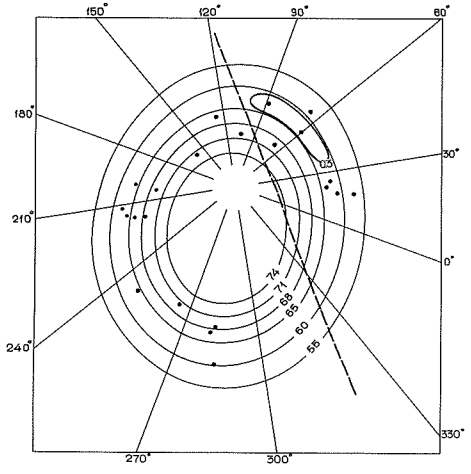

MARCH 22, 1965, 2133 UT

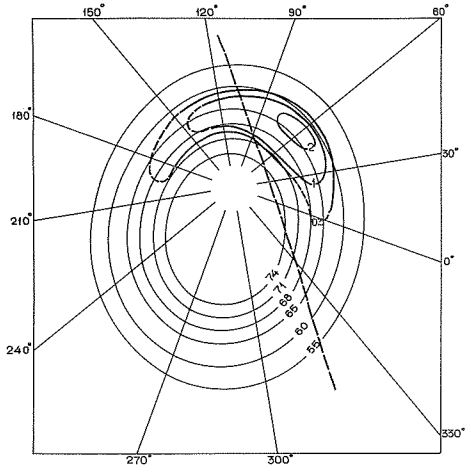

MARCH 22, 1965, 2148 UT

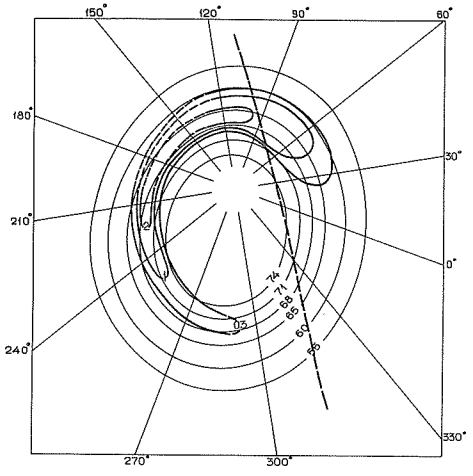

MARCH 22, 1965, 2203 UT

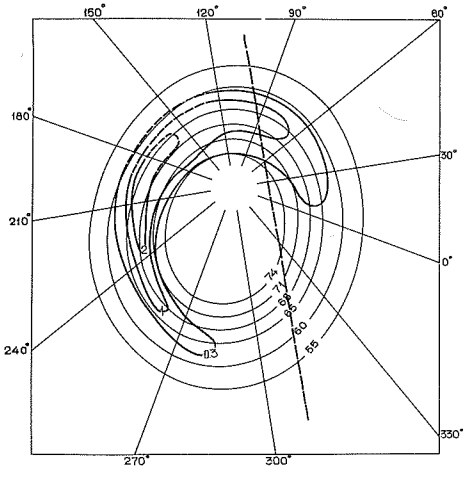

MARCH 22, 1965, 2218 UT

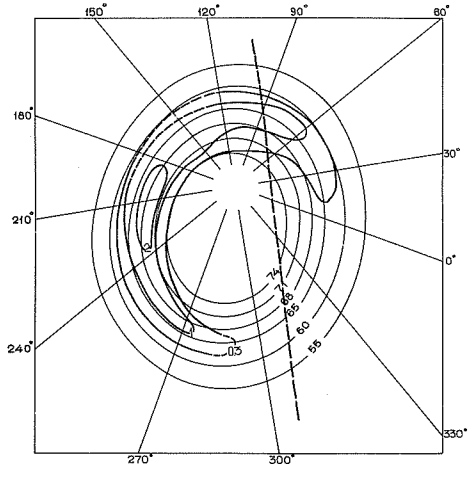

MARCH 22, 1965, 2233 UT

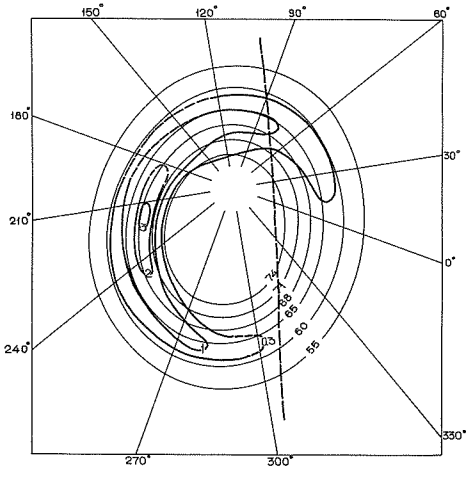

MARCH 22, 1965, 2248 UT

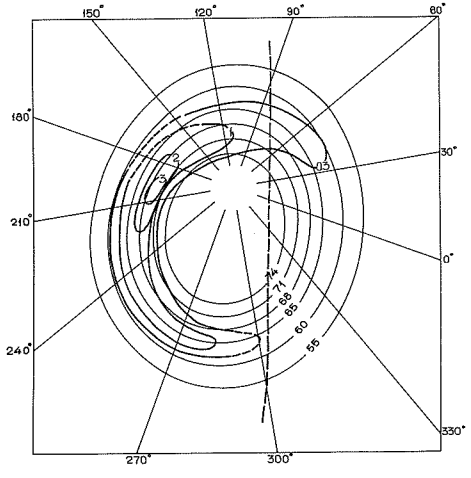

MARCH 22, 1965, 2303 UT

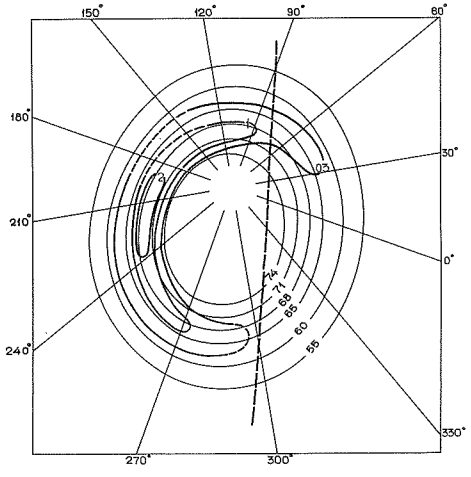

MARCH 22, 1965, 2318 UT

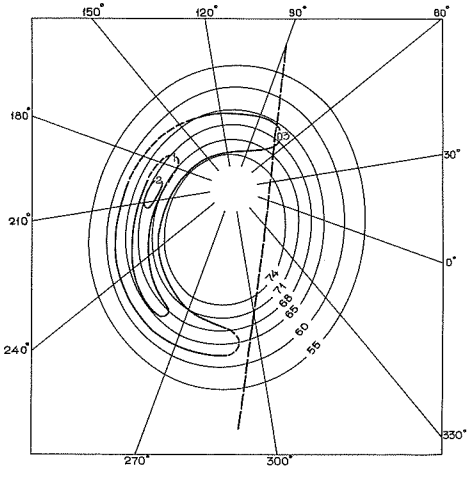

MARCH 22, 1965, 2333 UT

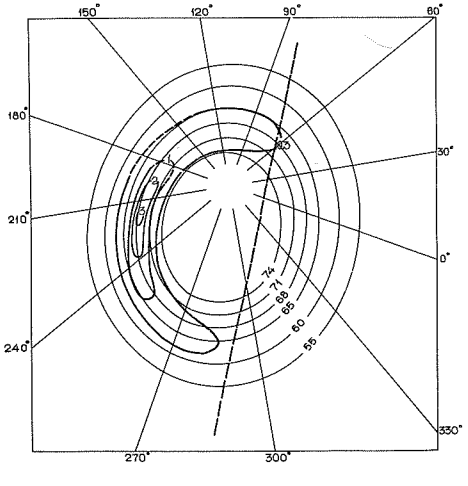

MARCH 22, 1965, 2343 UT

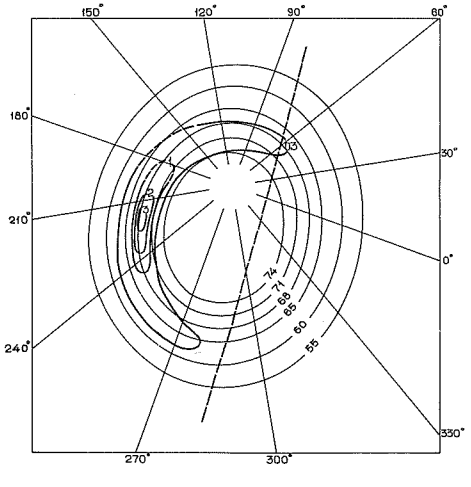

MARCH 23, 1965, 0003 UT

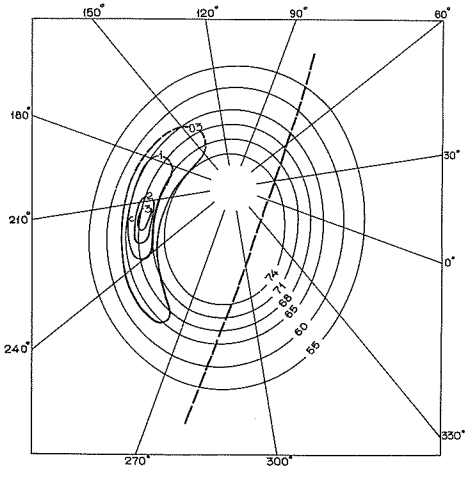

March 25, 1965, 1915 UT

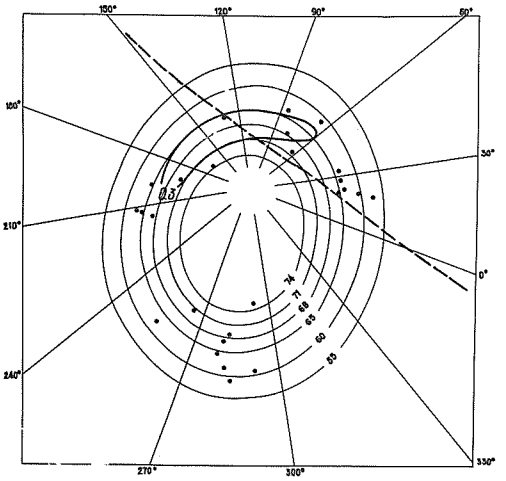

March 25, 1965, 1930 UT

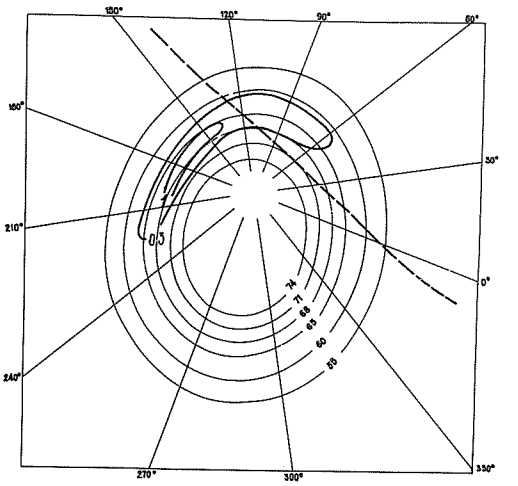

March 25, 1965, 1945 UT

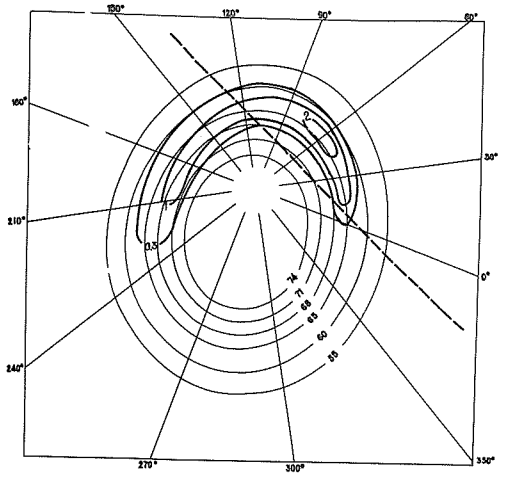

March 25, 1965, 2000 UT

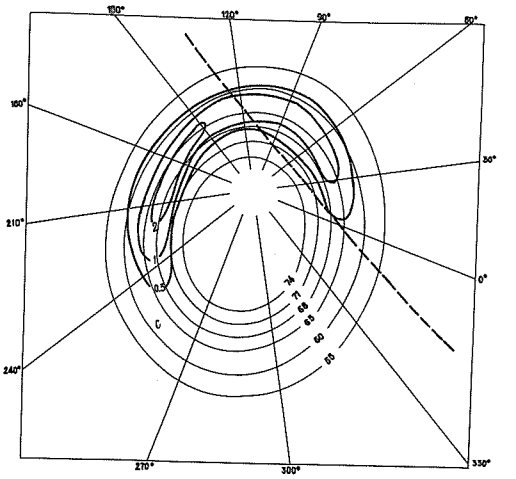

March 25, 1965, 2015 UT

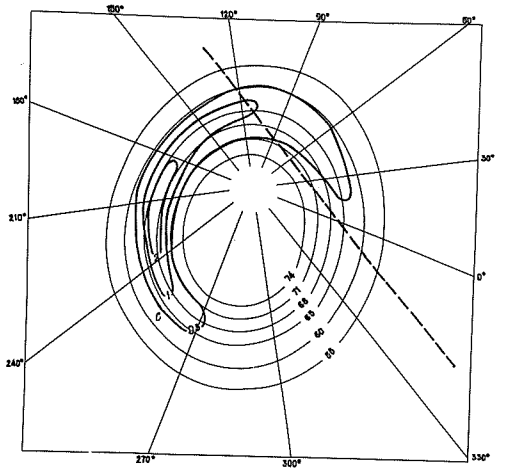

March 25, 1965, 2030 UT

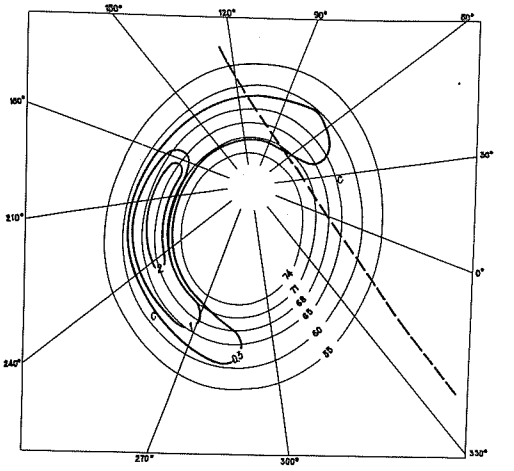

March 25, 1965, 2045 UT

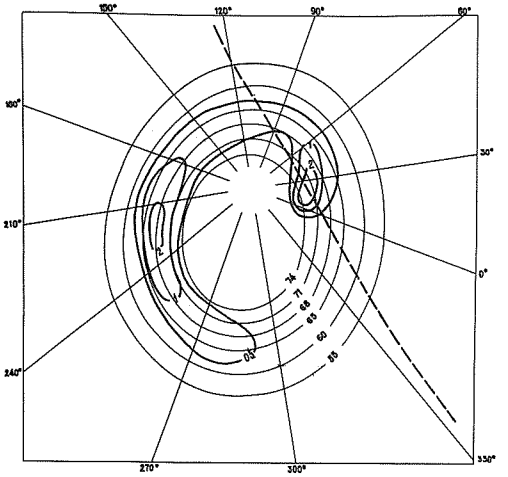

March 25, 1965, 2100 UT

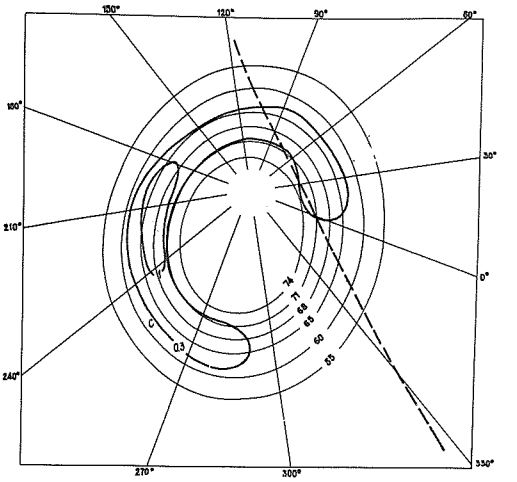

CONTOUR PLOT OF AURORAL ABSORPTION
MARCH 26,1965 0755 UT

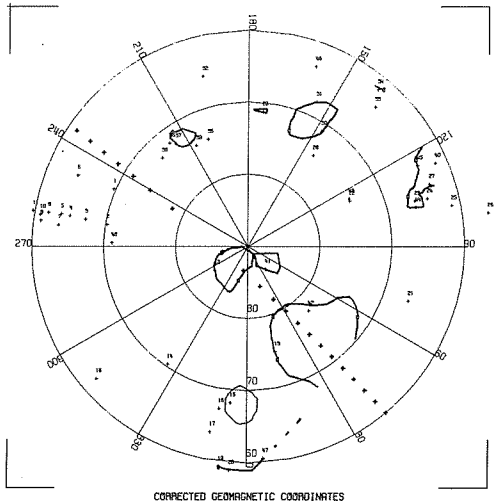

CORRECTED GEOMAGNETIC COORDINATES
CONTOUR INTERVAL = 0.5 DB

CONTOUR PLOT OF AURORAL ABSORPTION
MARCH 26,1965 0810 UT

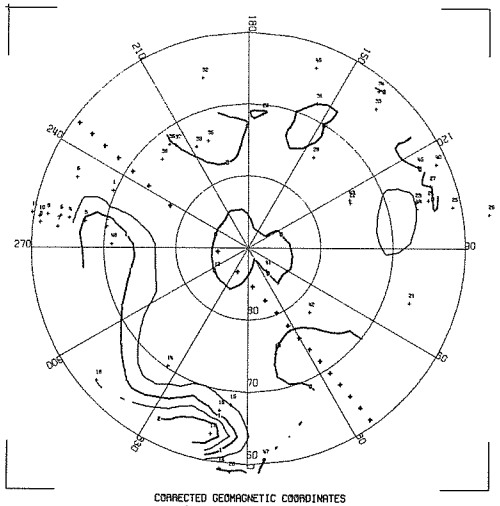

CORRECTED GEOMAGNETIC COORDINATES
CONTOUR INTERVAL = 0.5 DB

CONTOUR PLOT OF AURORAL ABSORPTION
MARCH 26,1965 0830 UT

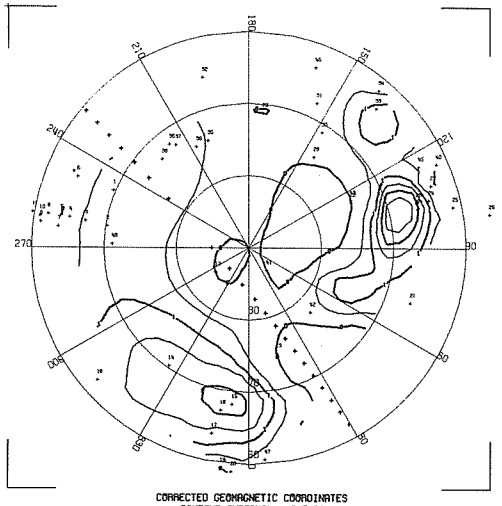

CORRECTED GEOMAGNETIC COORDINATES
CONTOUR INTERVAL = 0.5 DB

CONTOUR PLOT OF AURORAL ABSORPTION
MARCH 26,1965 0850 UT

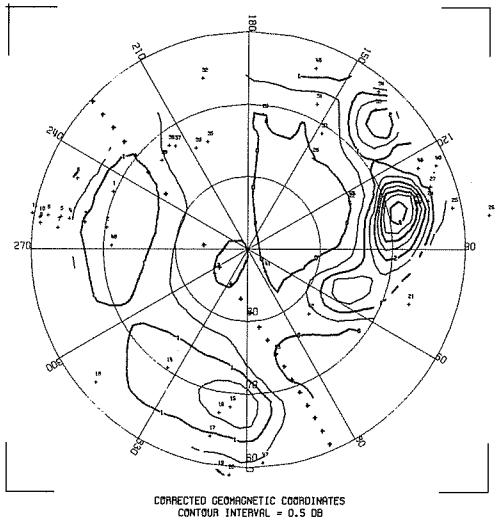

CORRECTED GEOMAGNETIC COORDINATES
CONTOUR INTERVAL = 0.5 DB

CONTOUR PLOT OF AURORAL ABSORPTION
MARCH 26,1965 0900 UT

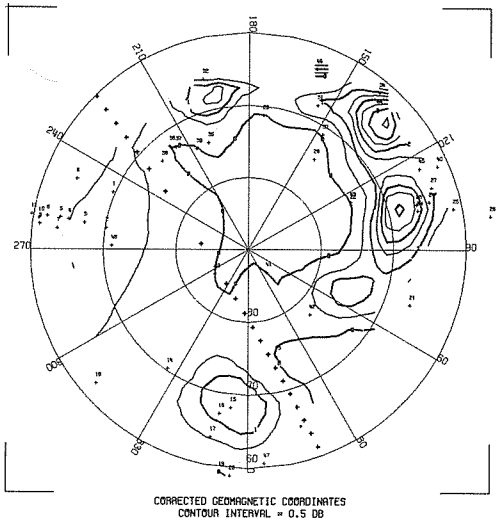

CORRECTED GEOMAGNETIC COORDINATES
CONTOUR INTERVAL = 0.5 DB

CONTOUR PLOT OF AURORAL ABSORPTION
MARCH 26,1965 0910 UT

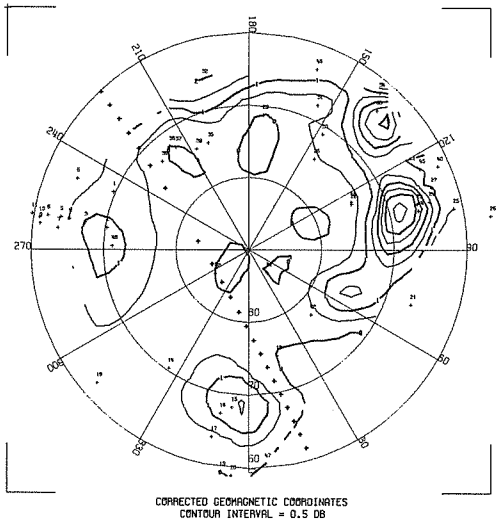

CORRECTED GEOMAGNETIC COORDINATES
CONTOUR INTERVAL = 0.5 DB

CONTOUR PLOT OF AURORAL ABSORPTION
MARCH 26,1965 0925 UT

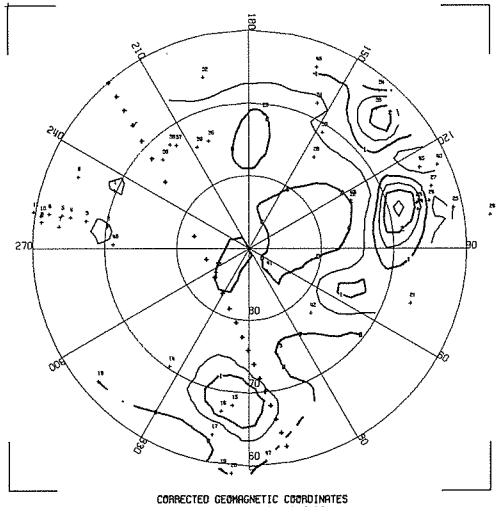

CORRECTED GEOMAGNETIC COORDINATES
CONTOUR INTERVAL = 0.5 DB

CONTOUR PLOT OF AURORAL ABSORPTION
MARCH 26,1965 0950 UT

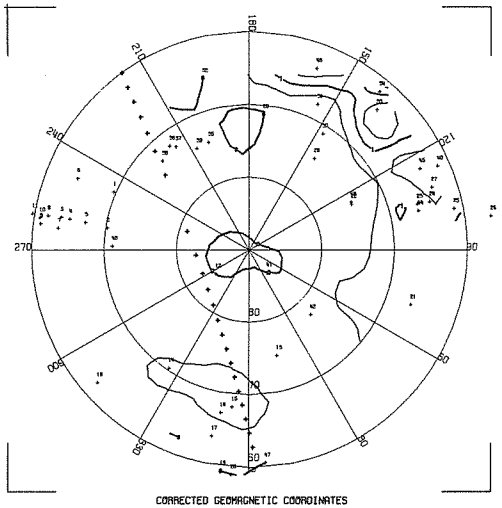

CORRECTED GEOMAGNETIC COORDINATES
CONTOUR INTERVAL = 0.5 DB

APRIL 9, 1965, 0245 UT

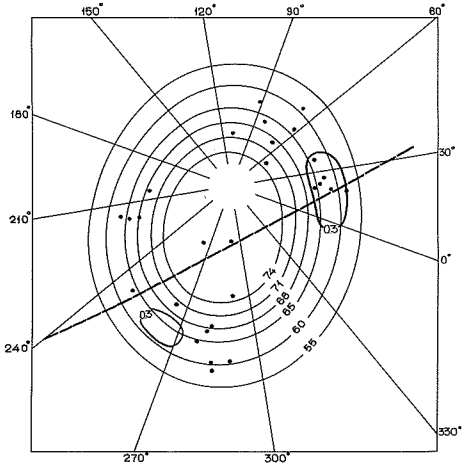

APRIL 9, 1965, 0300 UT

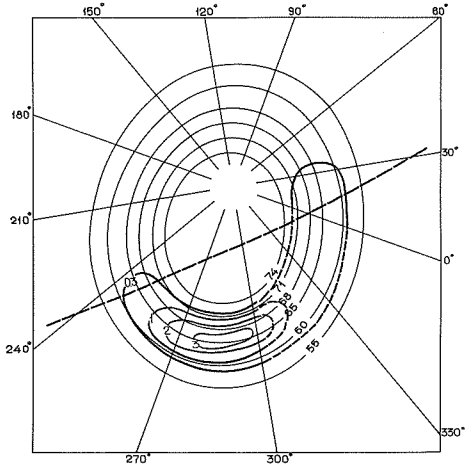

APRIL 9, 1965, 0315 UT

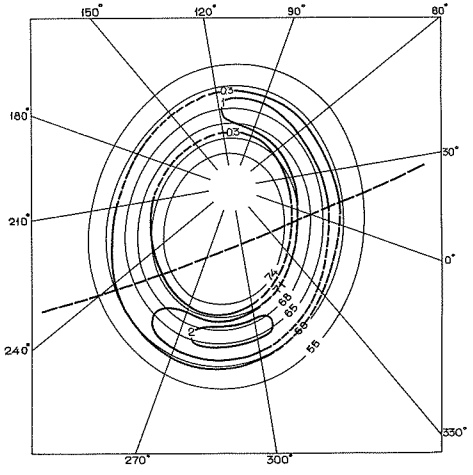

APRIL 9, 1965, 0330 UT

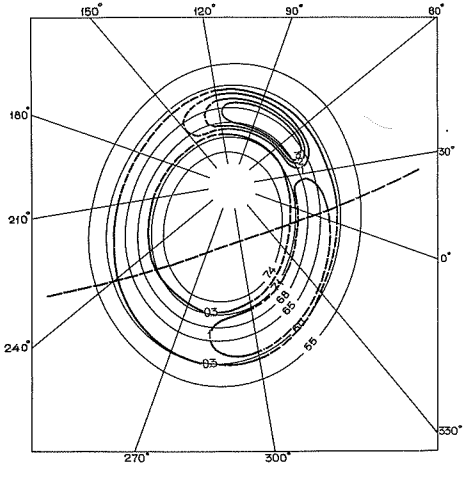

APRIL 9, 1965, 0345 UT

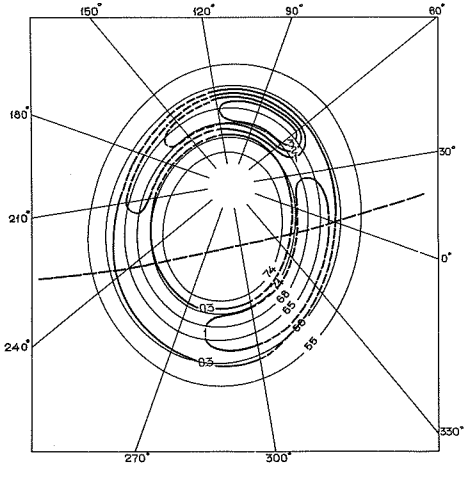

APRIL 9, 1965, 0400 UT

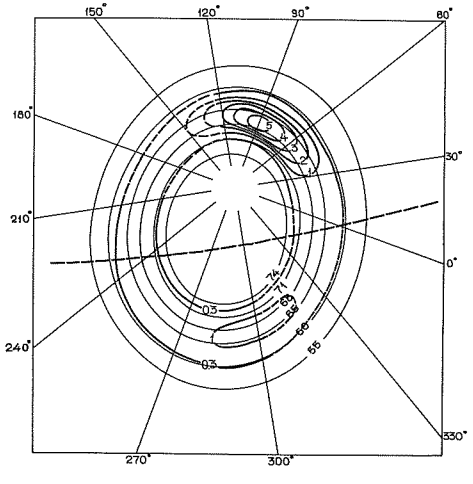

APRIL 9, 1965, 0415 UT

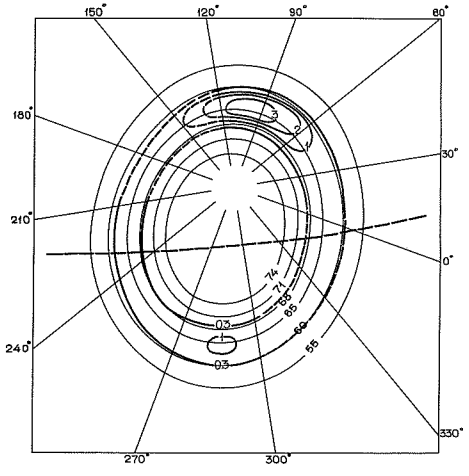

APRIL 9, 1965, 0430 UT

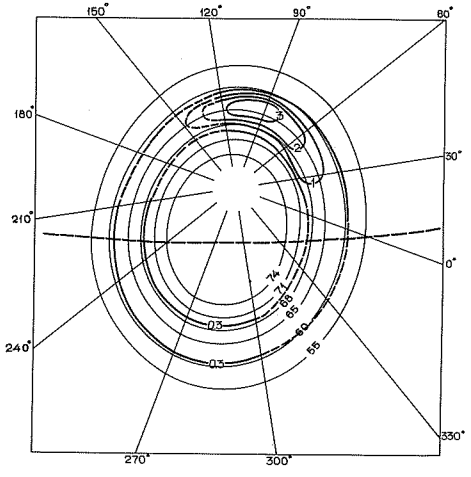

APRIL 9, 1965, 0445 UT

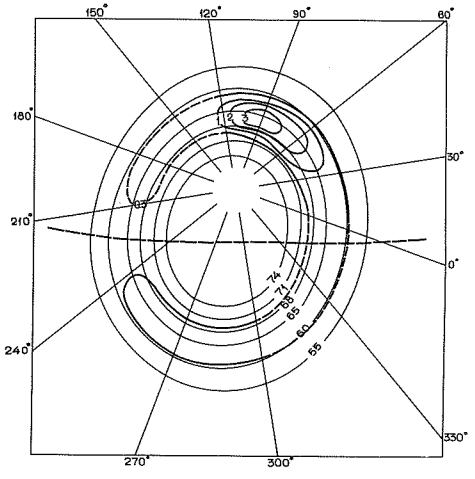

APRIL 9, 1965, 0500 UT

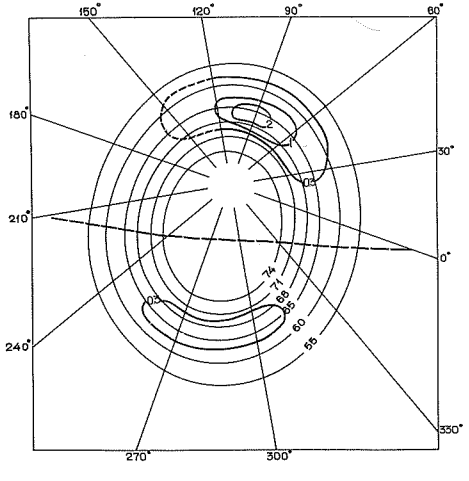

APRIL 9, 1965, 0515 UT

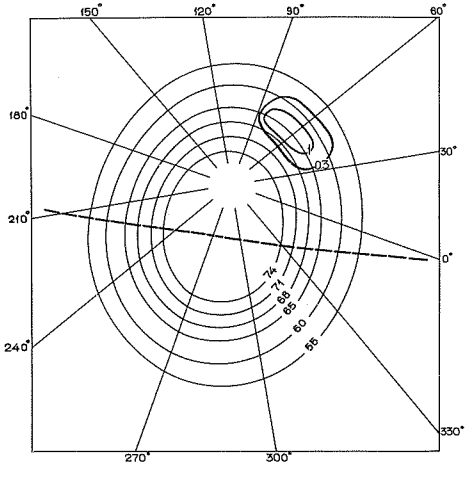

MAY 12, 1965, 0215 UT

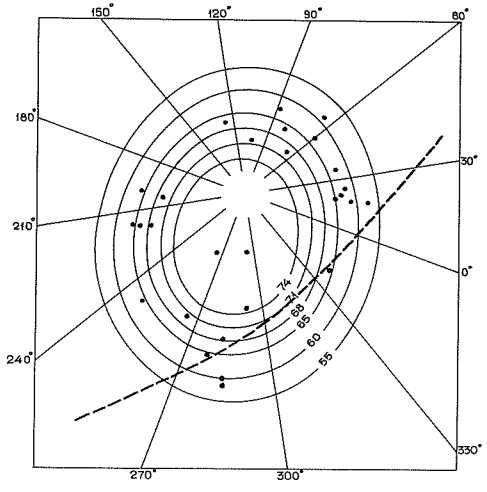

MAY 12, 1965, 0230 UT

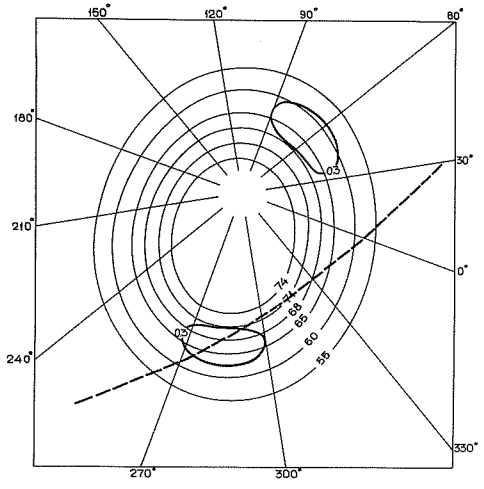

MAY 12, 1965, 0245 UT

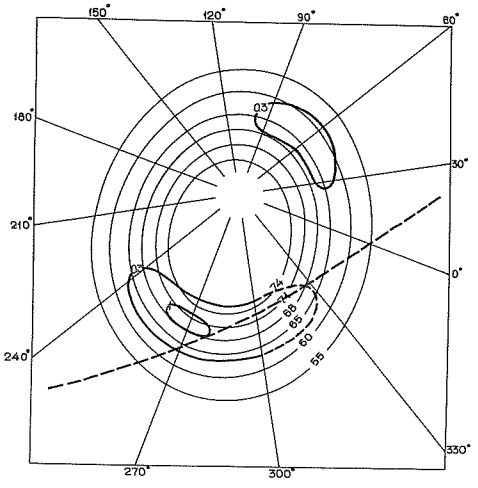

MAY 12, 1965, 0300 UT

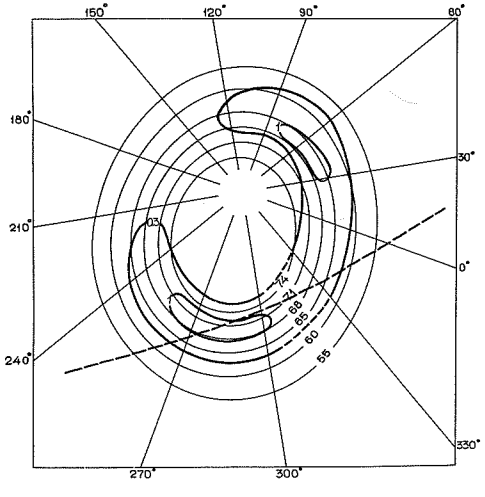

MAY 12, 1965, 0315 UT

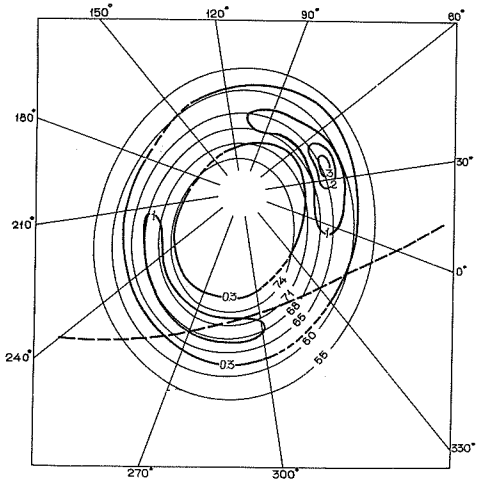

MAY 12, 1965, 0330 UT

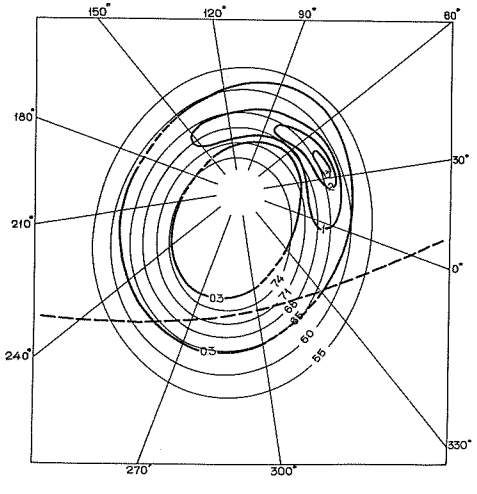

MAY 12, 1965, 0345 UT

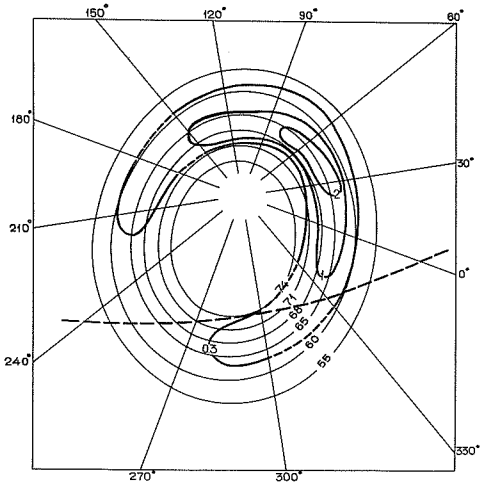

MAY 12, 1965, 0400 UT

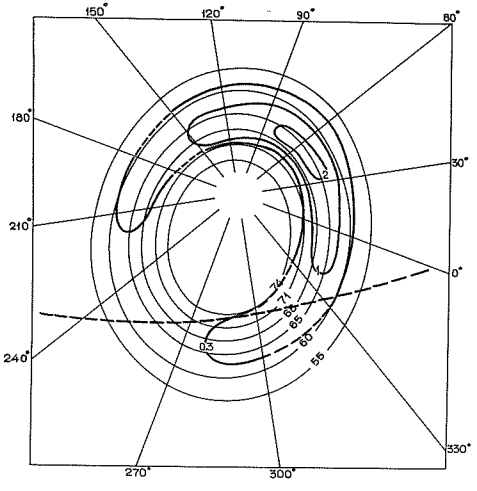

MAY 12, 1965, 0415 UT

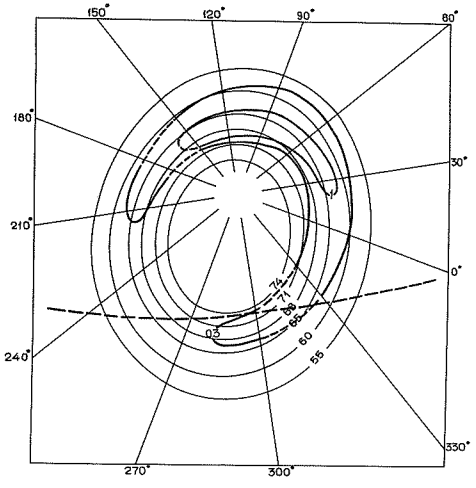

MAY 12, 1965, 0430 UT

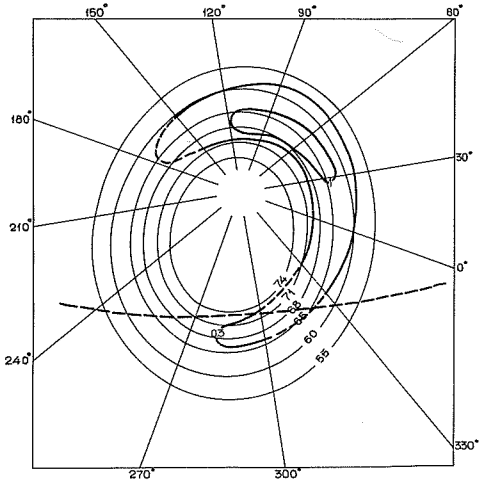

MAY 12, 1965, 0445 UT

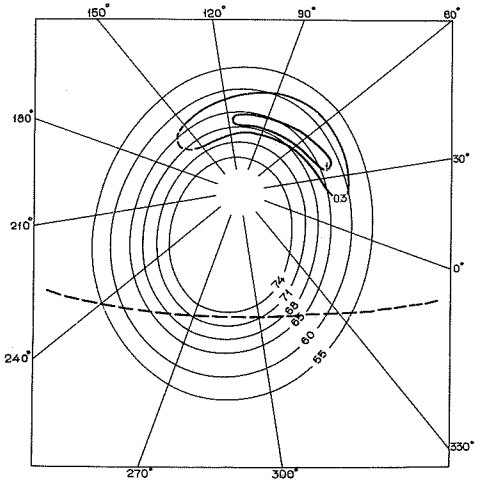

MAY 12, 1965, 0500 UT

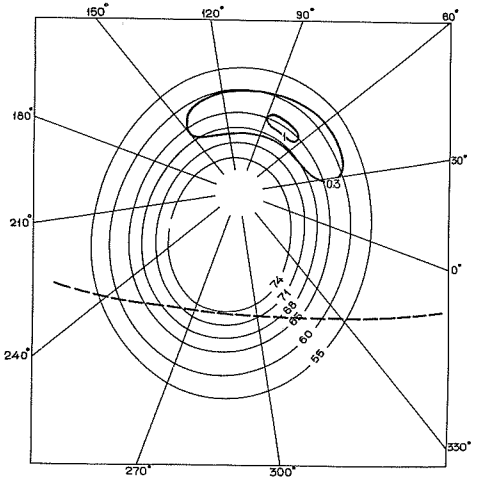

JULY 28, 1965, 0515 UT

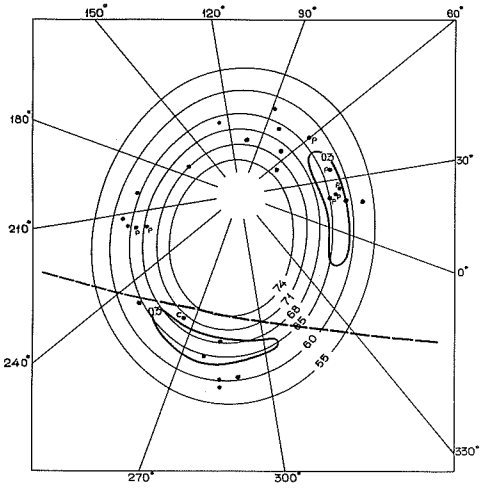

JULY 28, 1965, 0530 UT

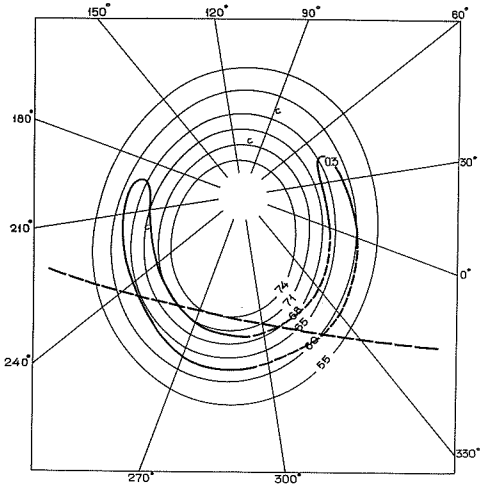

JULY 28, 1965, 0545 UT

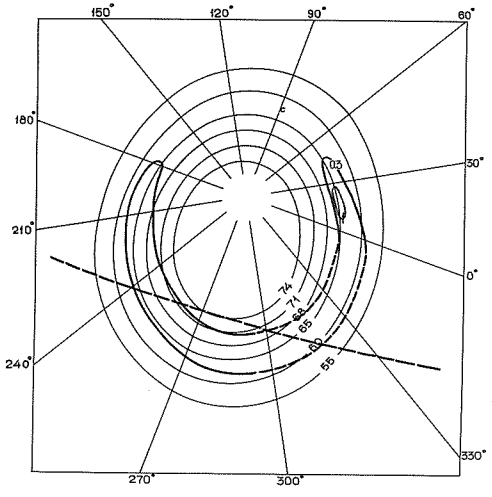

JULY 28, 1965, 0600 UT

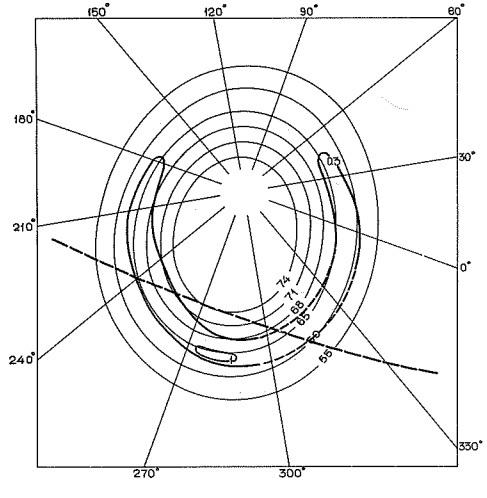

JULY 28, 1965, 0615 UT

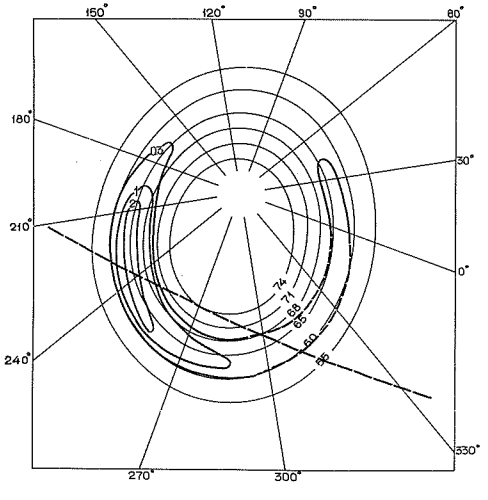

JULY 28, 1965, 0630 UT

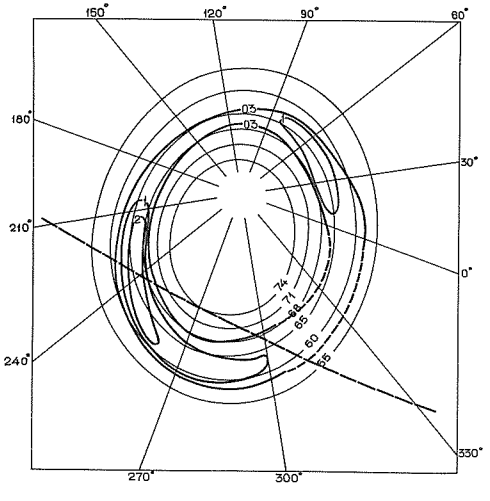

JULY 28, 1965, 0645 UT

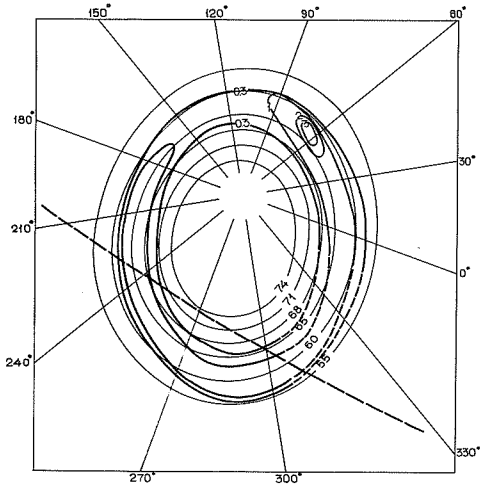

JULY 28, 1965, 0700 UT

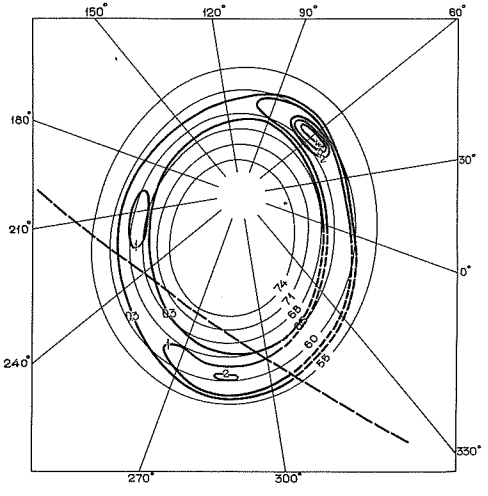

JULY 28, 1965, 0730 UT

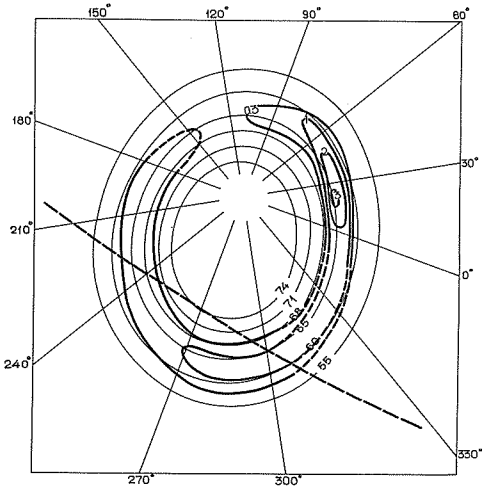

JULY 28, 1965, 0800 UT

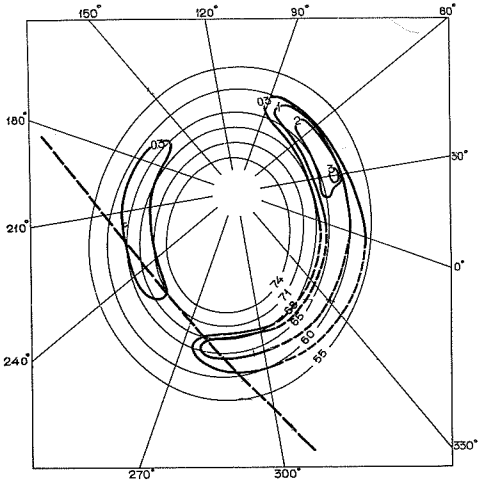

JULY 28, 1965, 0830 UT

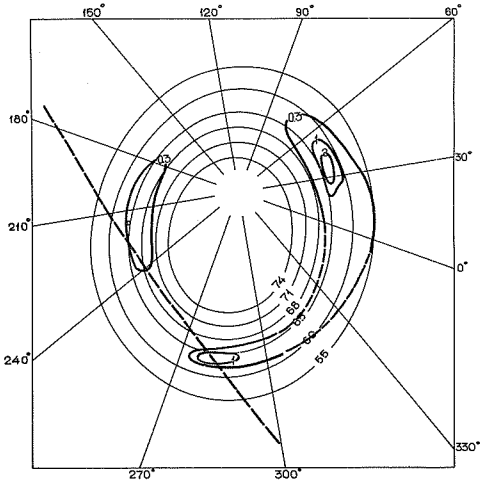

JULY 28, 1965, 0900 UT

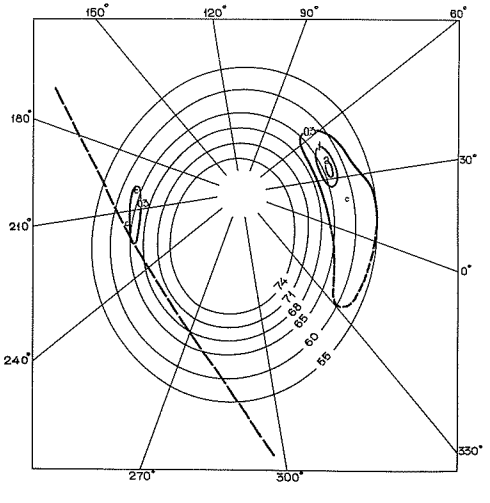

CONTOUR PLOT OF AURORAL ABSORPTION
AUGUST 2,1965 0815 UT

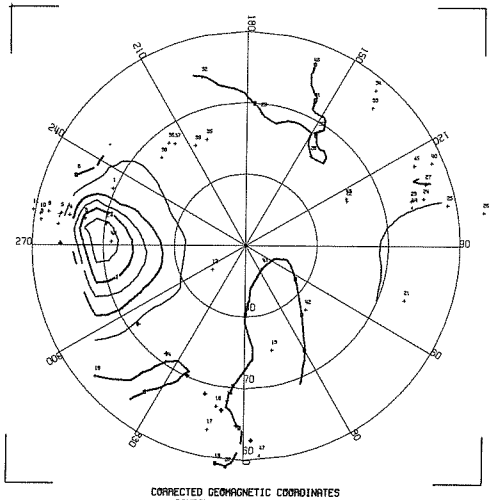

CORRECTED GEOMAGNETIC COORDINATES
CONTOUR INTERVAL = 0.25 DB

CONTOUR PLOT OF AURORAL ABSORPTION
AUGUST 2,1965 0830 UT

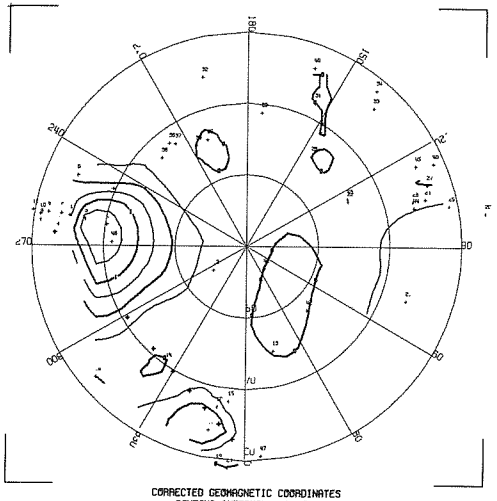

CORRECTED GEOMAGNETIC COORDINATES
CONTOUR INTERVAL = 0.25 DB

CONTOUR PLOT OF AURORAL ABSORPTION
AUGUST 2,1965 0845 UT

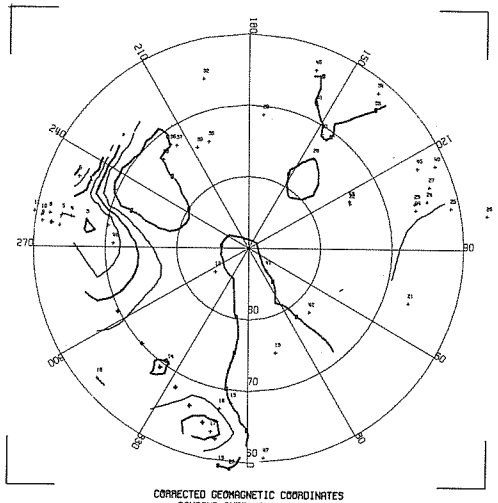

CORRECTED GEOMAGNETIC COORDINATES
CONTOUR INTERVAL = 0.25 DB

CONTOUR PLOT OF AURORAL ABSORPTION
AUGUST 2,1965 0950 UT

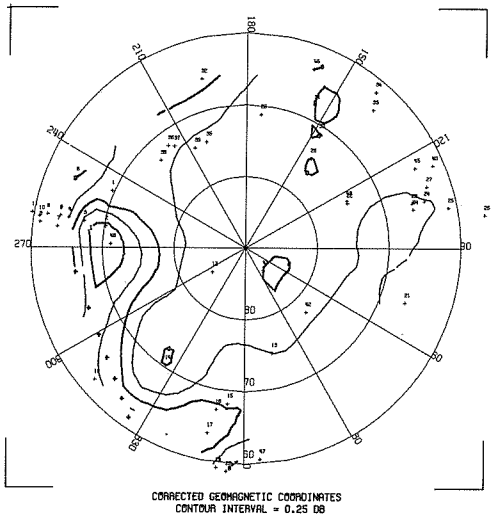

CORRECTED GEOMAGNETIC COORDINATES
CONTOUR INTERVAL = 0.25 DB

CONTOUR PLOT OF AURORAL ABSORPTION
AUGUST 2,1965 0900 UT

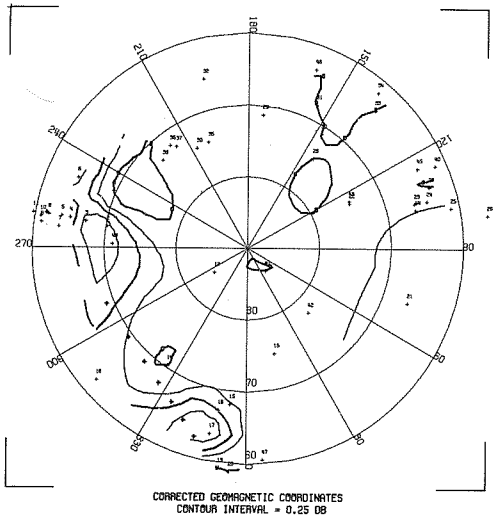

CORRECTED GEOMAGNETIC COORDINATES
CONTOUR INTERVAL = 0.25 DB

CONTOUR PLOT OF AURORAL ABSORPTION
AUGUST 2,1965 0915 UT

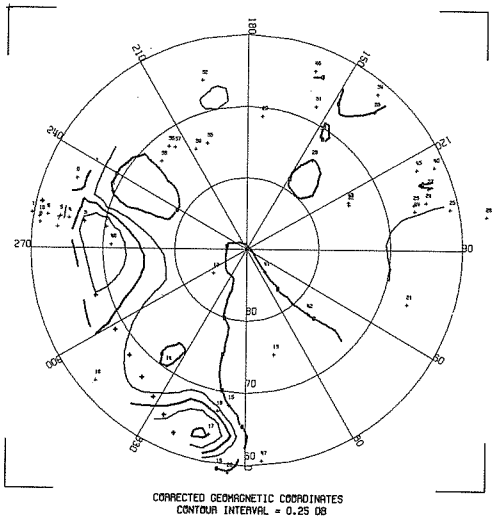

CORRECTED GEOMAGNETIC COORDINATES
CONTOUR INTERVAL = 0.25 DB

SEPTEMBER 12, 1965, 2355 UT

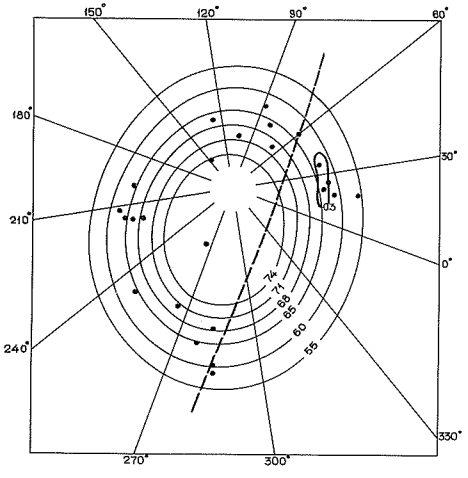

SEPTEMBER 13, 1965, 0000 UT

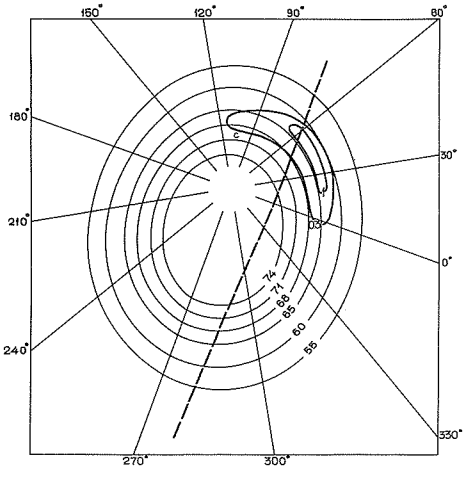

SEPTEMBER 13, 1965, 0010 UT

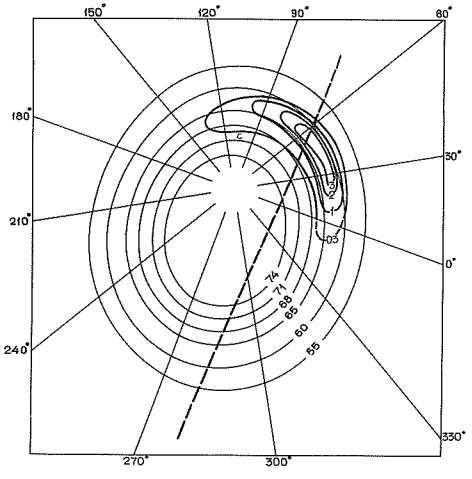

SEPTEMBER 13, 1965, 0015 UT

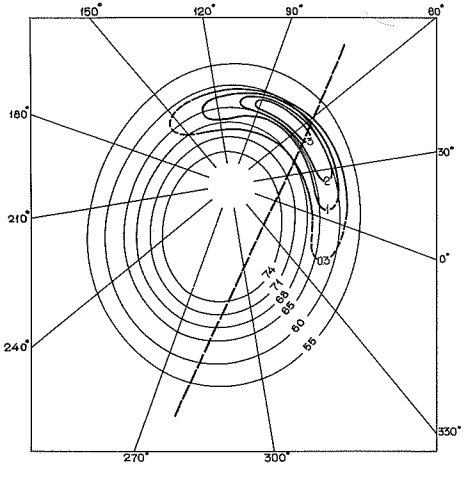

SEPTEMBER 13, 1965, 0030 UT

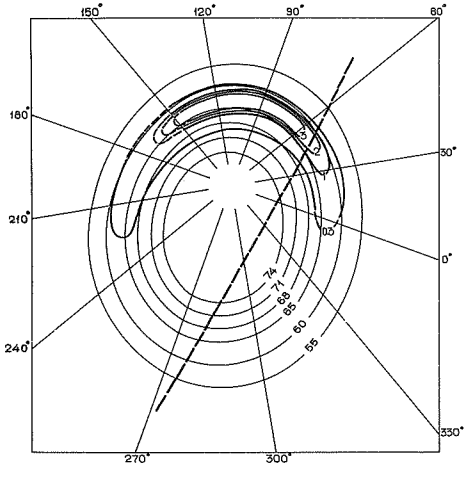

SEPTEMBER 13, 1965, 0045 UT

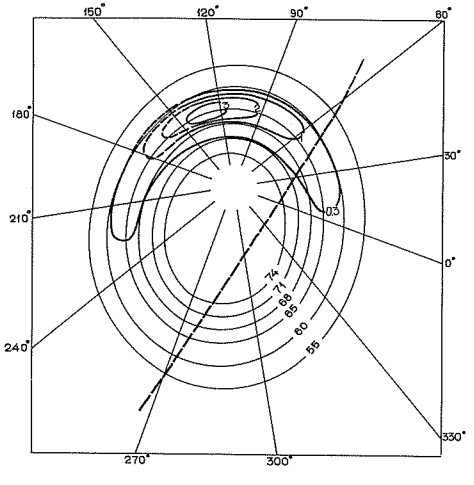

SEPTEMBER 13, 1965, 0100 UT

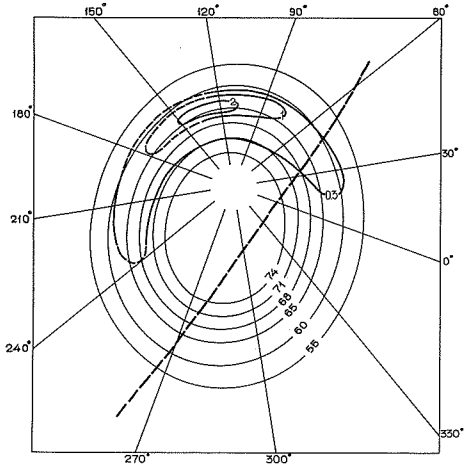

SEPTEMBER 13, 1965, 0115 UT

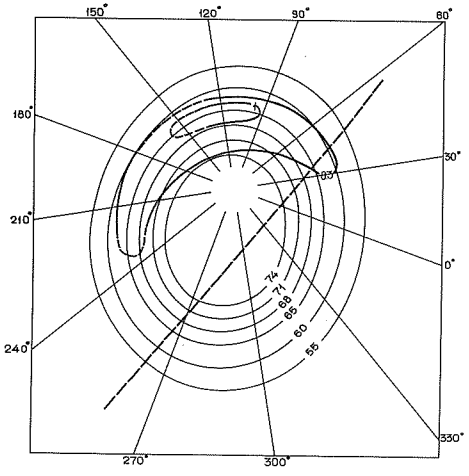

SEPTEMBER 13, 1965, 0120 UT

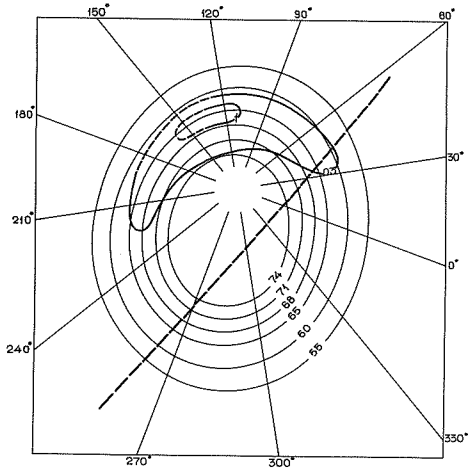

SEPTEMBER 13, 1965, 0130 UT

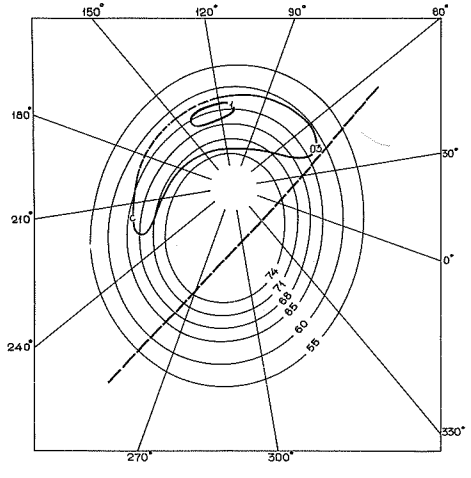

SEPTEMBER 13, 1965, 0145 UT

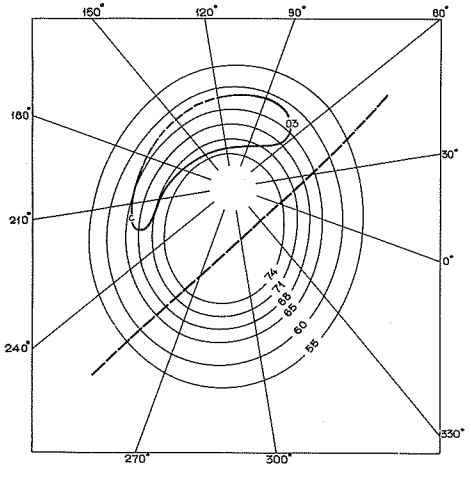

SEPTEMBER 13, 1965, 0200 UT

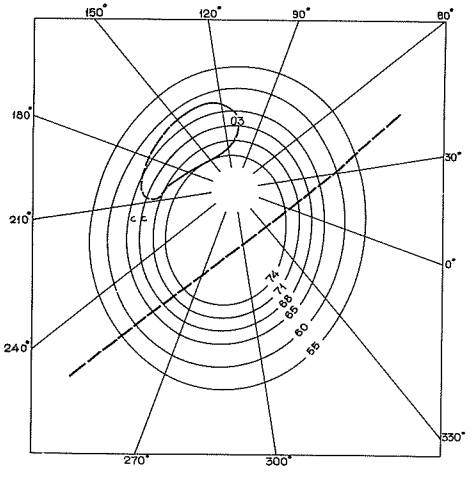

CONTOUR PLOT OF AURORAL ABSORPTION
NOVEMBER 7,1965 0950 UT

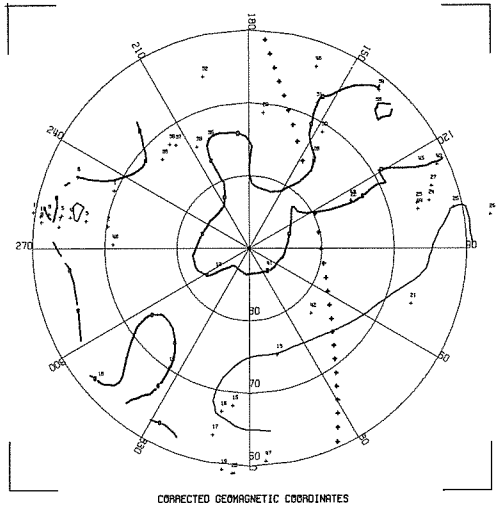

CORRECTED GEOMAGNETIC COORDINATES
CONTOUR INTERVAL = 0.5 DB

CONTOUR PLOT OF AURORAL ABSORPTION
NOVEMBER 7,1965 0955 UT

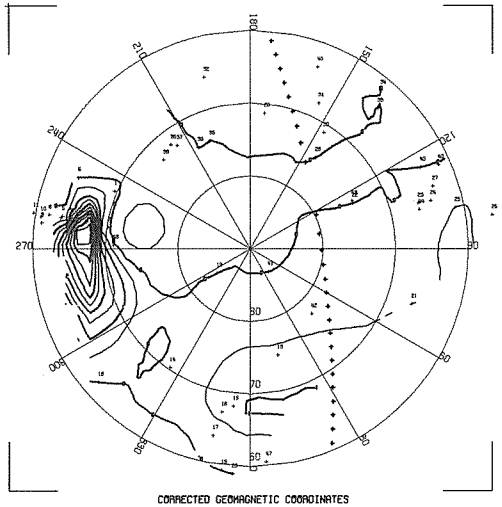

CORRECTED GEOMAGNETIC COORDINATES
CONTOUR INTERVAL = 0.5 DB

CONTOUR PLOT OF AURORAL ABSORPTION
NOVEMBER 7,1965 1000 UT

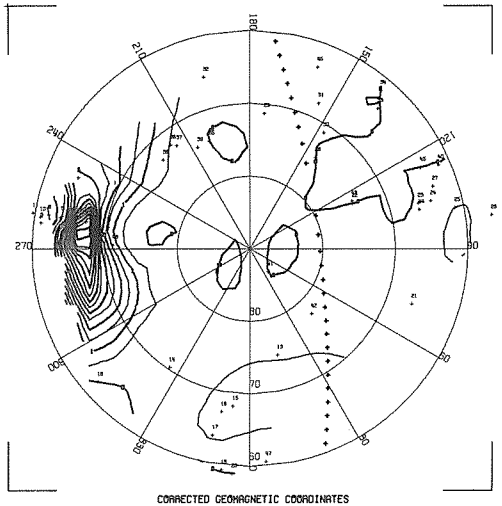

CORRECTED GEOMAGNETIC COORDINATES
CONTOUR INTERVAL = 0.5 DB

CONTOUR PLOT OF AURORAL ABSORPTION
NOVEMBER 7,1965 1010 UT

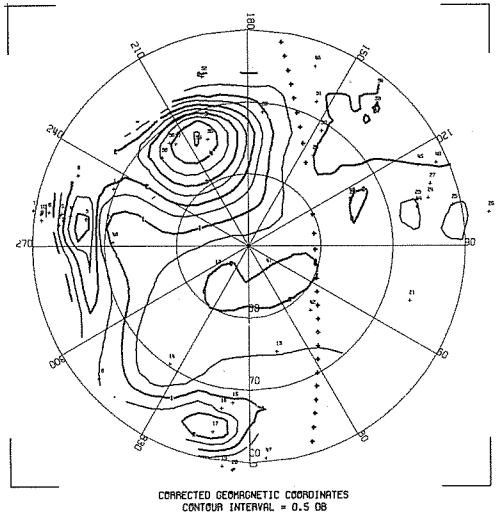

CORRECTED GEOMAGNETIC COORDINATES
CONTOUR INTERVAL = 0.5 DB

CONTOUR PLOT OF AURORAL ABSORPTION
NOVEMBER 7,1965 1020 UT

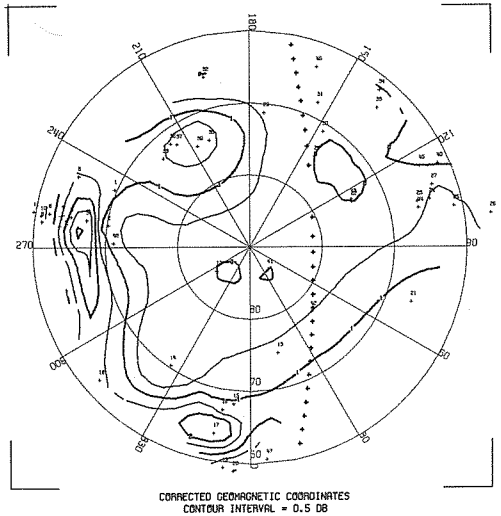

CORRECTED GEOMAGNETIC COORDINATES
CONTOUR INTERVAL = 0.5 DB

CONTOUR PLOT OF AURORAL ABSORPTION
NOVEMBER 7,1965 1035 UT

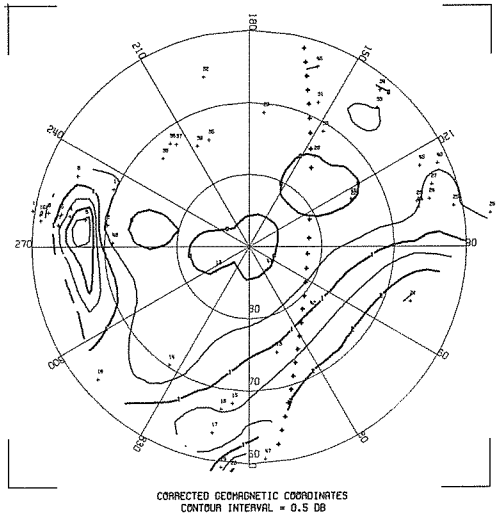

CORRECTED GEOMAGNETIC COORDINATES
CONTOUR INTERVAL = 0.5 DB

CONTOUR PLOT OF AURORAL ABSORPTION
NOVEMBER 7,1965 1045 UT

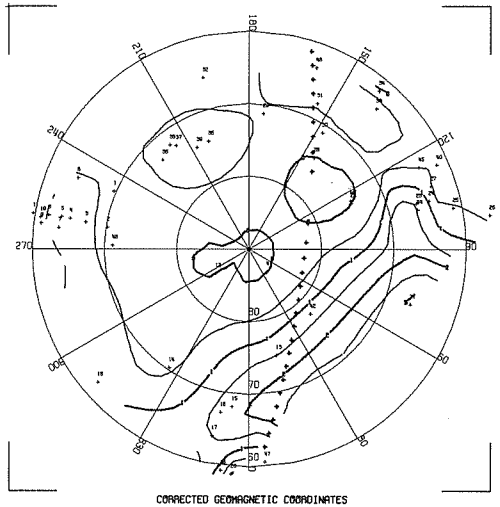

CORRECTED GEOMAGNETIC COORDINATES
CONTOUR INTERVAL = 0.5 DB

CONTOUR PLOT OF AURORAL ABSORPTION
NOVEMBER 7,1965 1125 UT

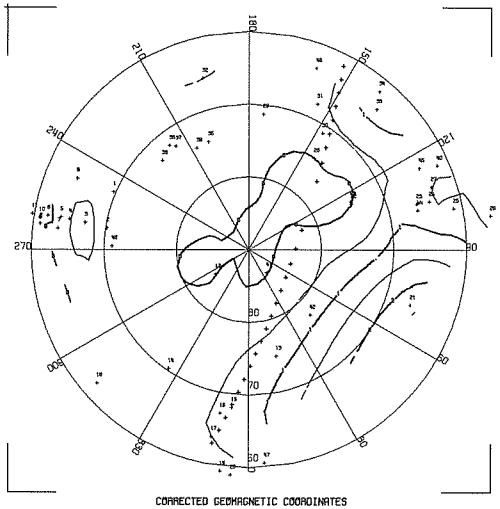

CORRECTED GEOMAGNETIC COORDINATES
CONTOUR INTERVAL = 0.5 DB

CONTOUR PLOT OF AURORAL ABSORPTION
NOVEMBER 7,1965 1150 UT

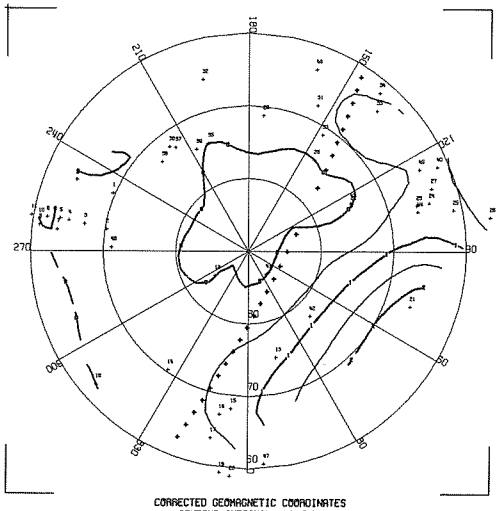

CORRECTED GEOMAGNETIC COORDINATES
CONTOUR INTERVAL = 0.5 DB

NOVEMBER 13, 1965, 2057 UT

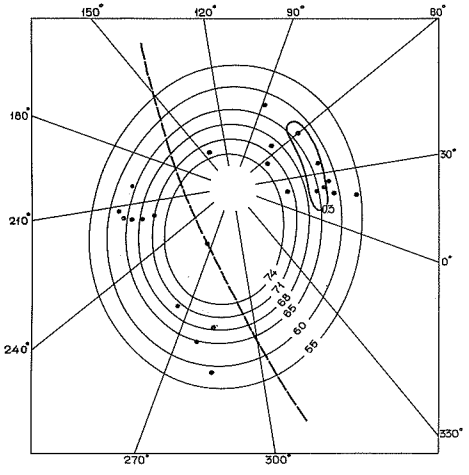

NOVEMBER 13, 1965, 2102 UT

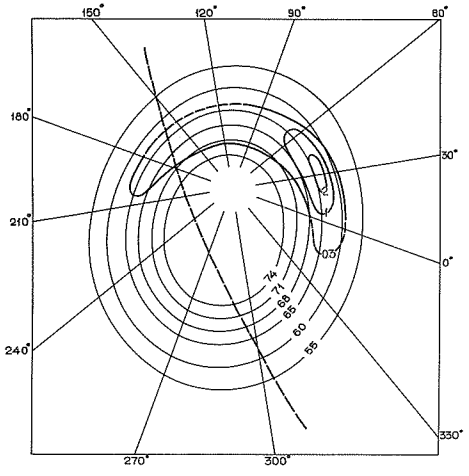

NOVEMBER 13, 1965, 2107 UT

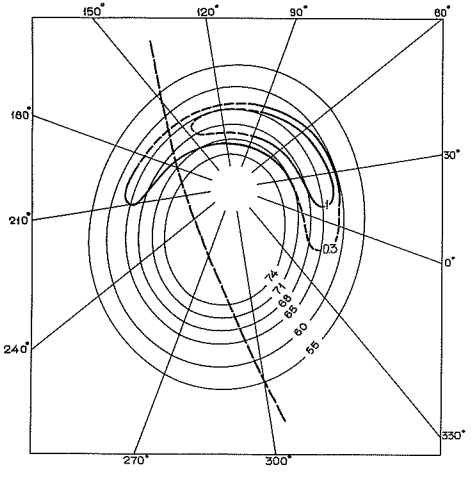

NOVEMBER 13, 1965, 2112 UT

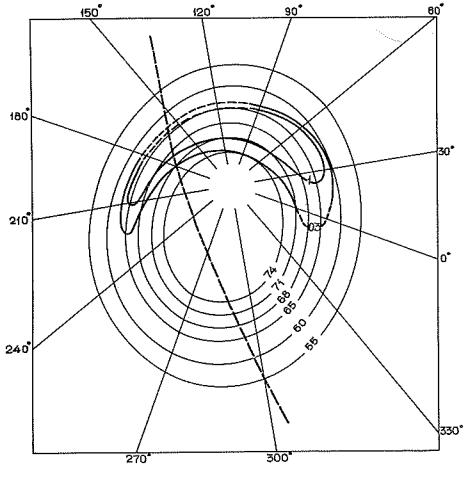

NOVEMBER 13, 1965, 2117 UT

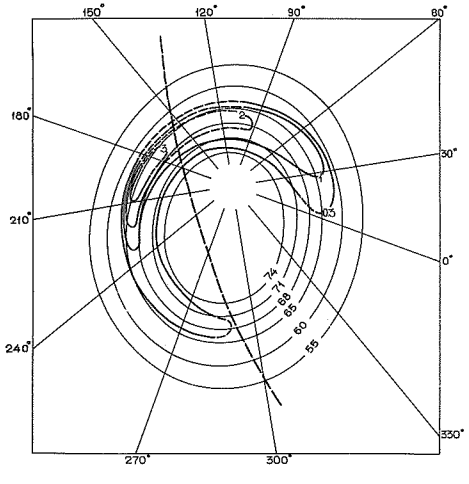

NOVEMBER 13, 1965, 2127 UT

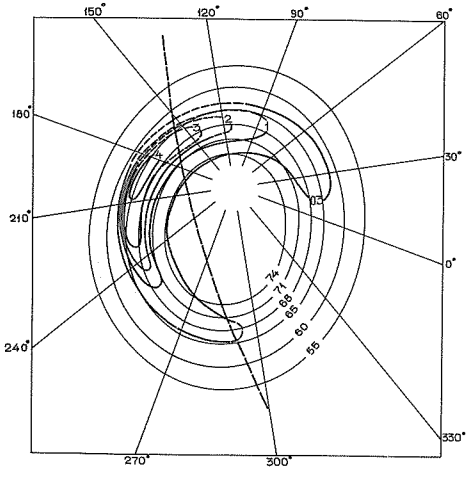

NOVEMBER 13, 1965, 2142 UT

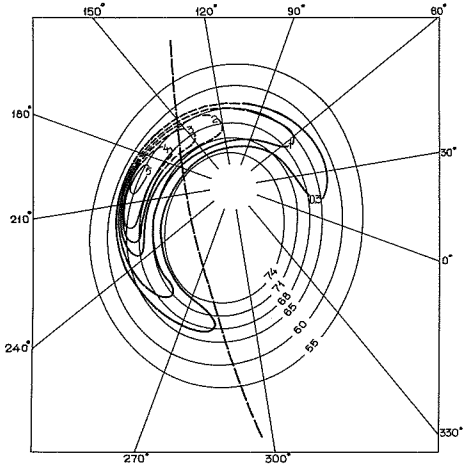

NOVEMBER 13, 1965, 2157 UT

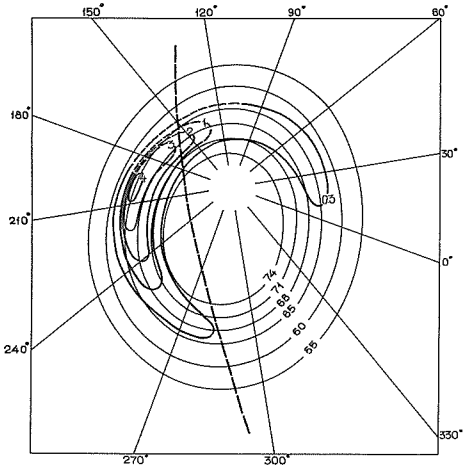

NOVEMBER 13, 1965, 2212 UT

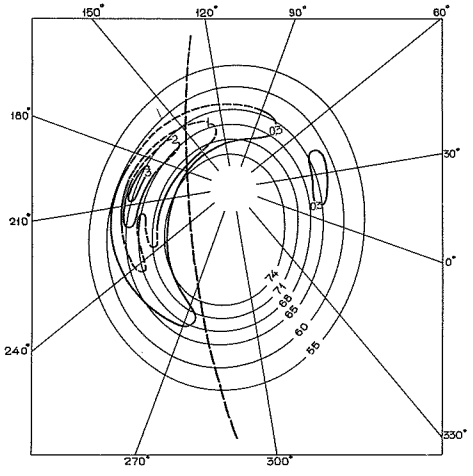

NOVEMBER 13, 1965, 2227 UT

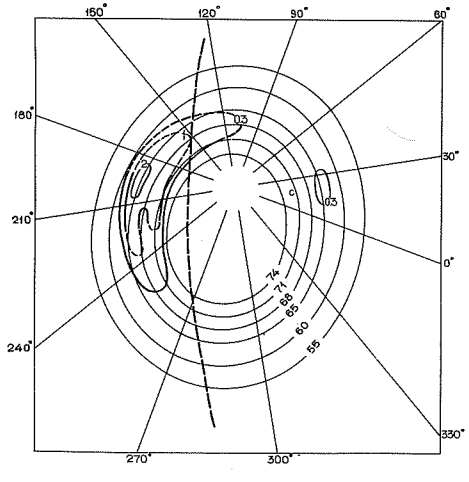

NOVEMBER 13, 1965, 2242 UT

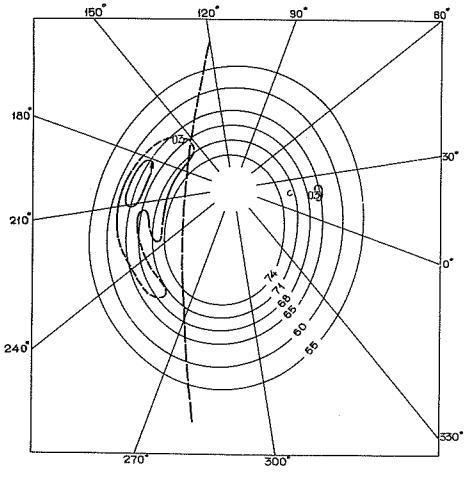

NOVEMBER 13, 1965, 2257 UT

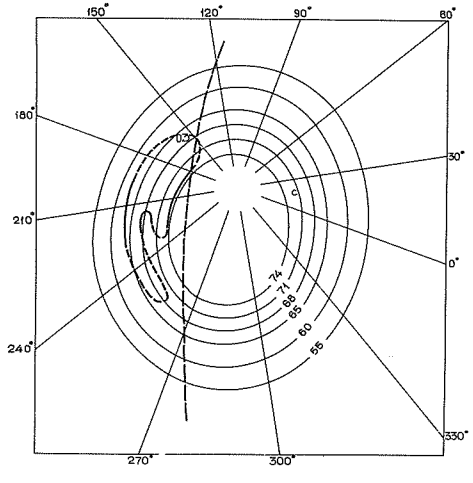

December 18, 1965, 16 40 UT

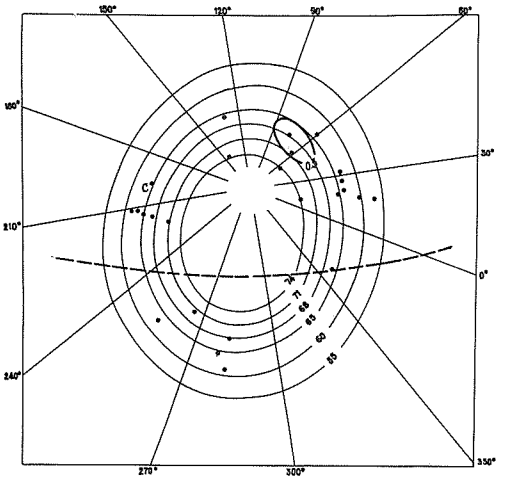

December 18, 1965, 16 45 UT

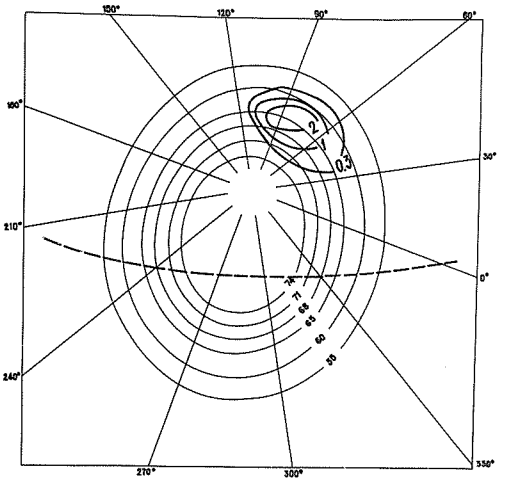

December 18, 1965, 1650 UT

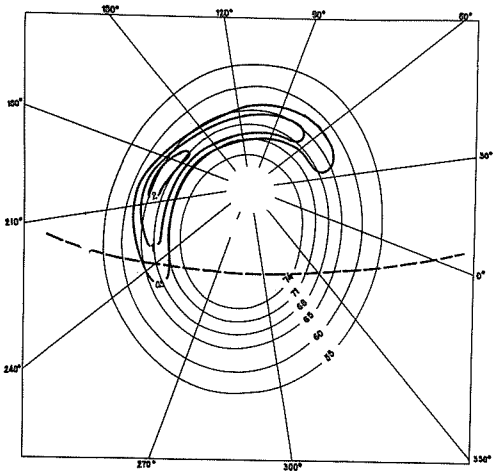

December 18, 1965, 17 00 UT

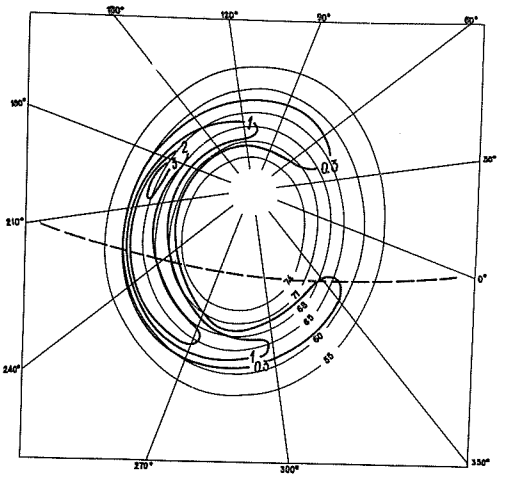

December 18, 1965, 17 15 UT

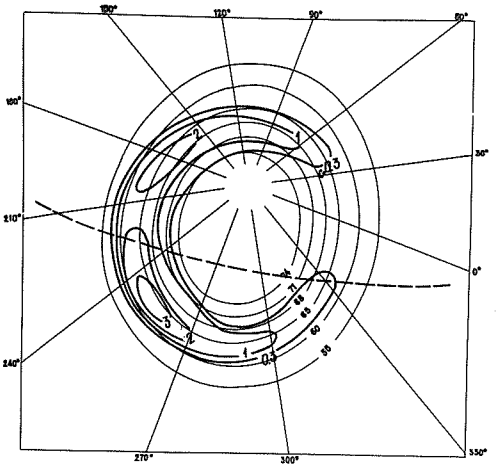

December 18, 1965, 17 30 UT

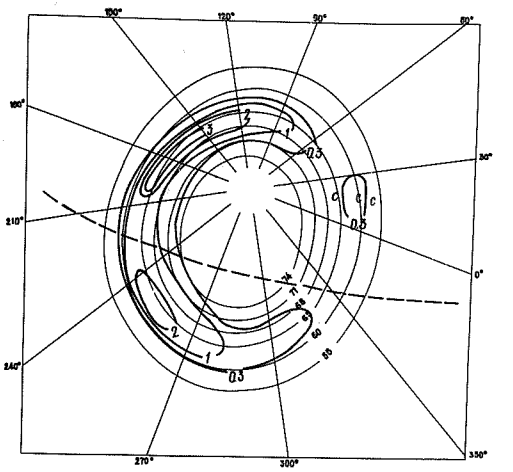

December 18, 1965, 1745 UT

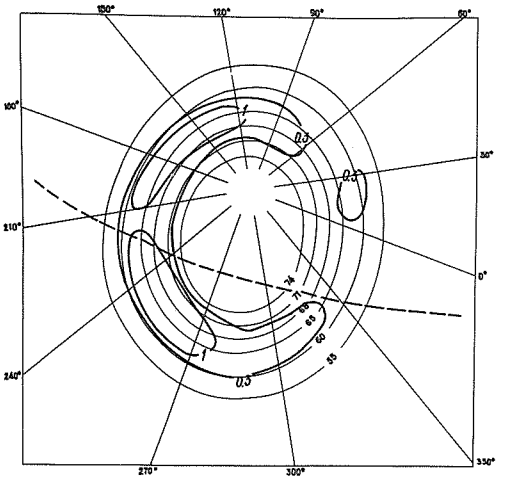

December 18, 1965, 1800 UT

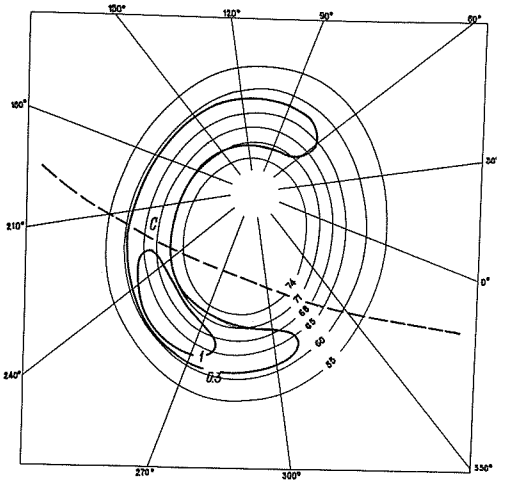

December 18, 1965, 1815 UT

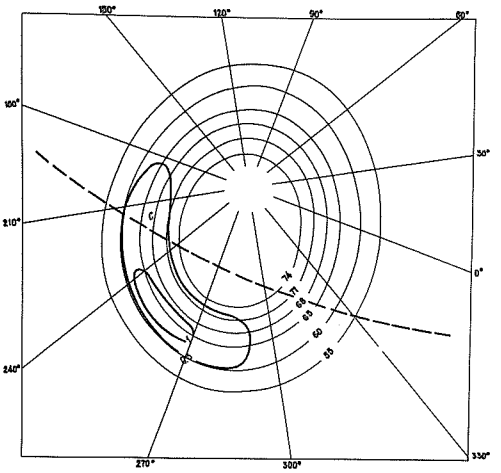

December 18, 1965, 1830 UT

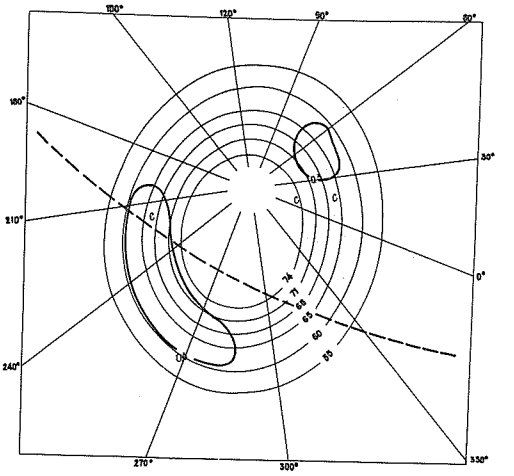

December 18, 1965, 1845 UT

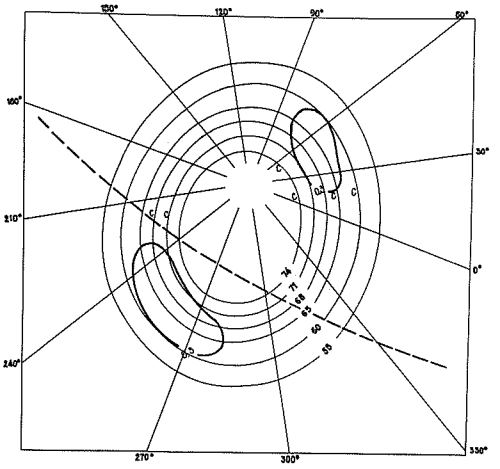

January 15, 1969, 1800 UT

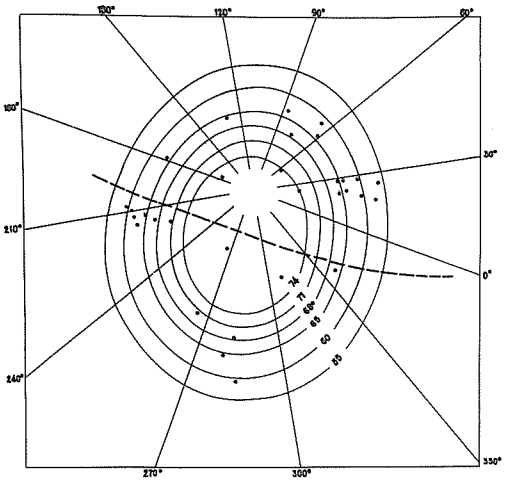

January 15, 1969, 1805 UT

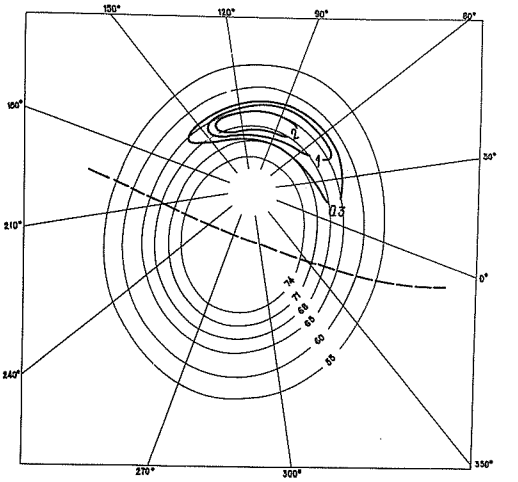

January 15, 1969, 1815 UT

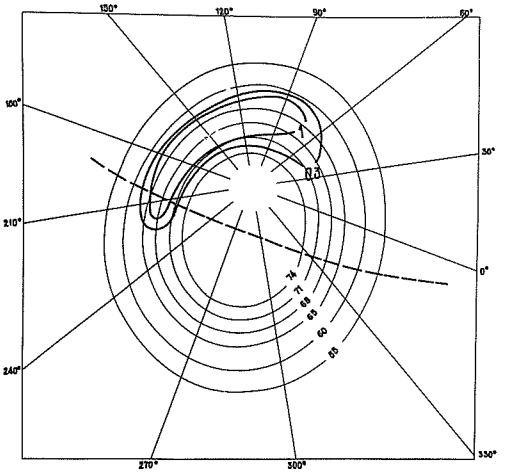

January 15, 1969, 1830 UT

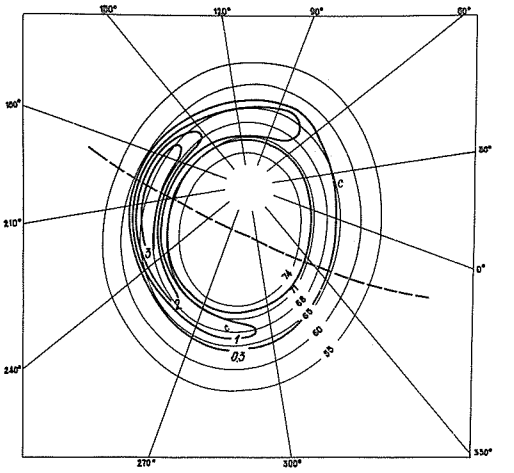

January 15, 1969, 1845 UT

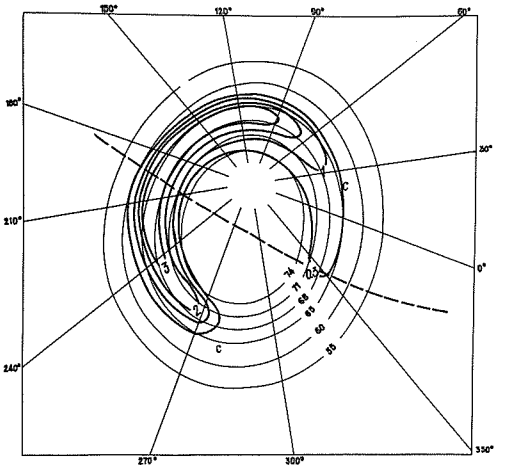

January 15, 1969, 1900 UT

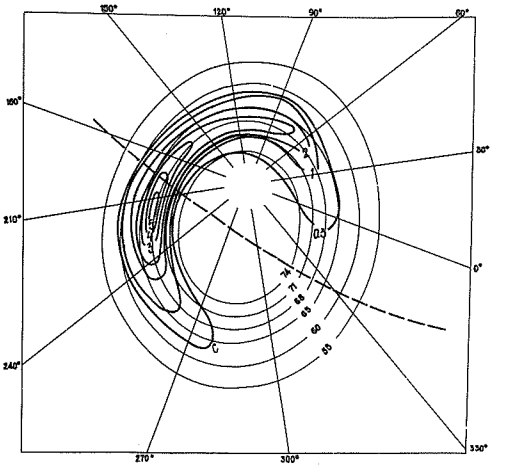

January 15, 1969, 1915 UT

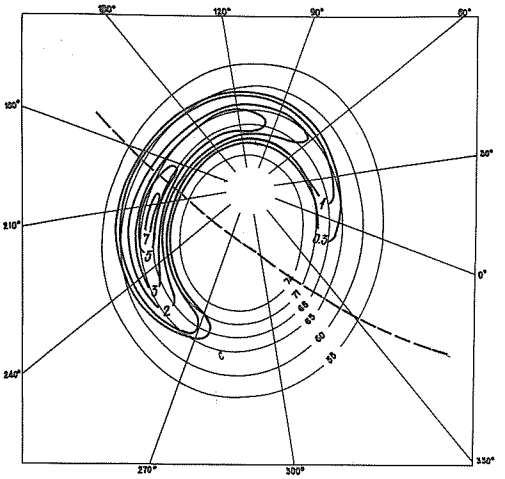

January 15, 1969, 1930 UT

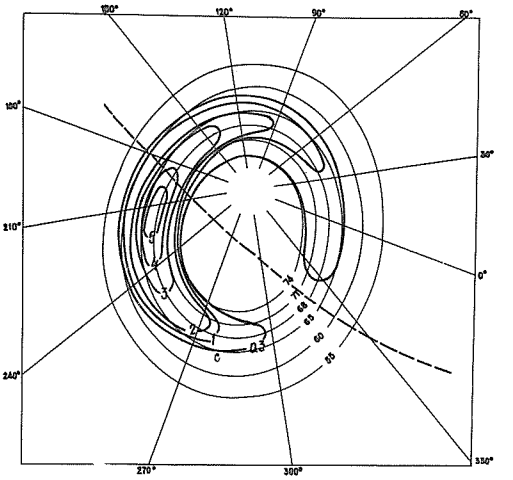

January 15, 1969, 1945 UT

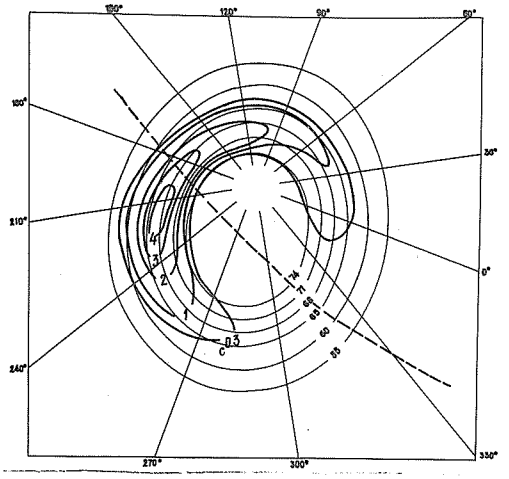

January 15, 1969, 2000 UT

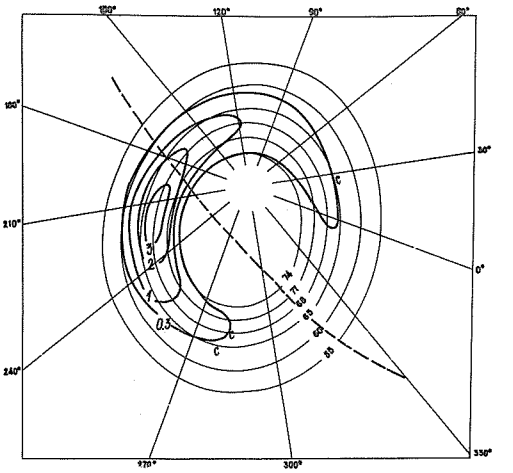

January 15, 1969, 2015 UT

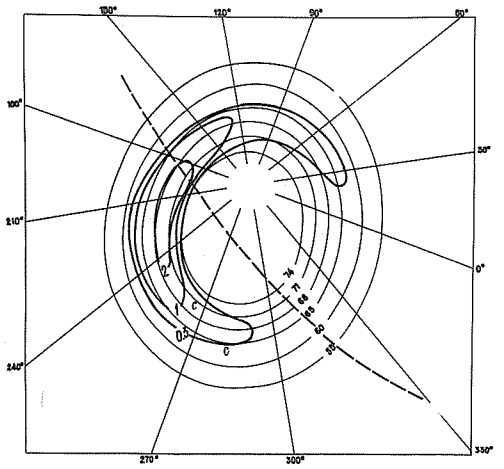

January 15, 1969, 2045 UT

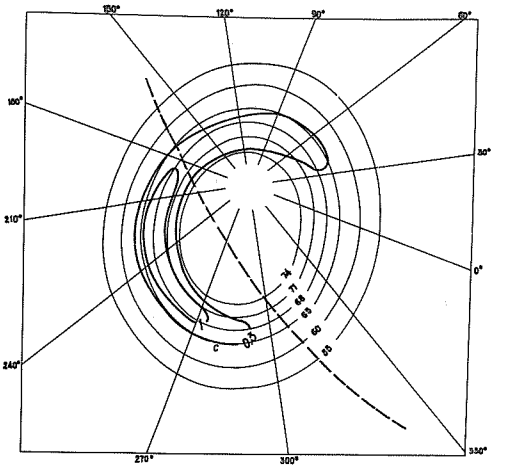

CONTOUR PLOT OF AURORAL ABSORPTION
JANUARY 17,1969 1700 UT

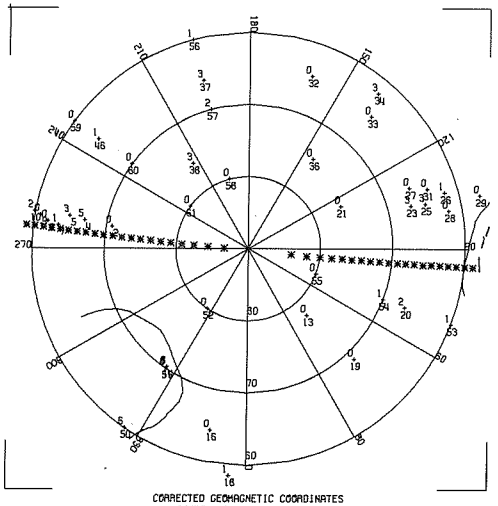

CORRECTED GEOMAGNETIC COORDINATES
CONTOUR INTERVAL = 0.5 DB

CONTOUR PLOT OF AURORAL ABSORPTION
JANUARY 17,1969 1715 UT

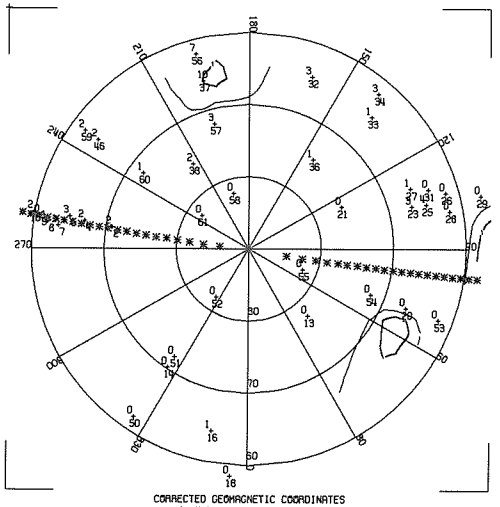

CORRECTED GEOMAGNETIC COORDINATES
CONTOUR INTERVAL = 0.50 DB

CONTOUR PLOT OF AURORAL ABSORPTION
JANUARY 17,1969 1730 UT

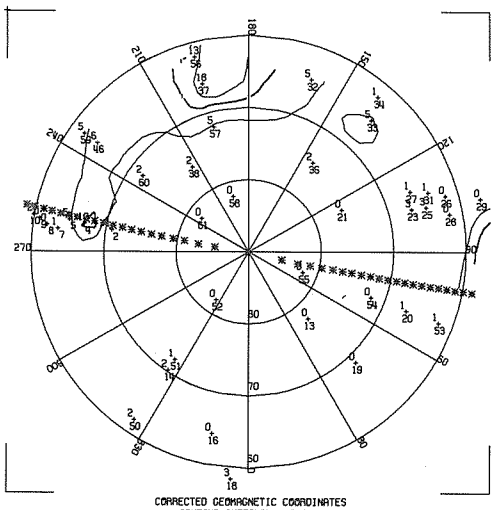

CORRECTED GEOMAGNETIC COORDINATES
CONTOUR INTERVAL = 0.50 DB

CONTOUR PLOT OF AURORAL ABSORPTION
JANUARY 17,1969 1745 UT

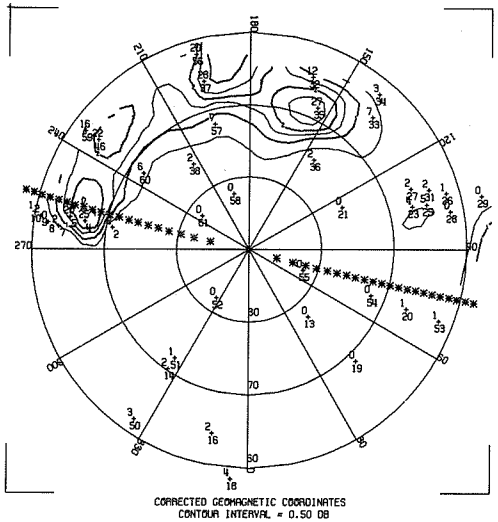

CORRECTED GEOMAGNETIC COORDINATES
CONTOUR INTERVAL = 0.50 DB

CONTOUR PLOT OF AURORAL ABSORPTION
JANUARY 17,1969 1800 UT

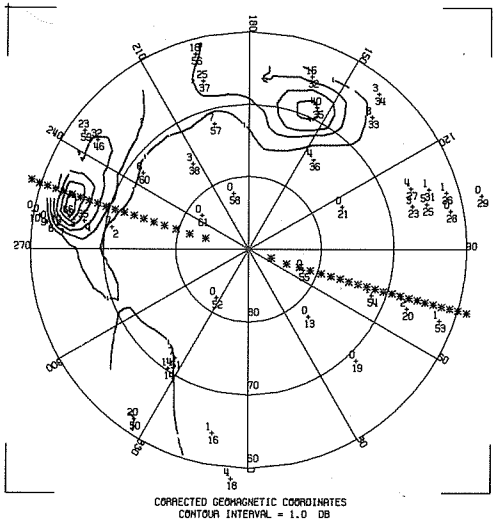

CORRECTED GEOMAGNETIC COORDINATES
CONTOUR INTERVAL = 1.0 DB

CONTOUR PLOT OF AURORAL ABSORPTION
JANUARY 17,1969 1820 UT

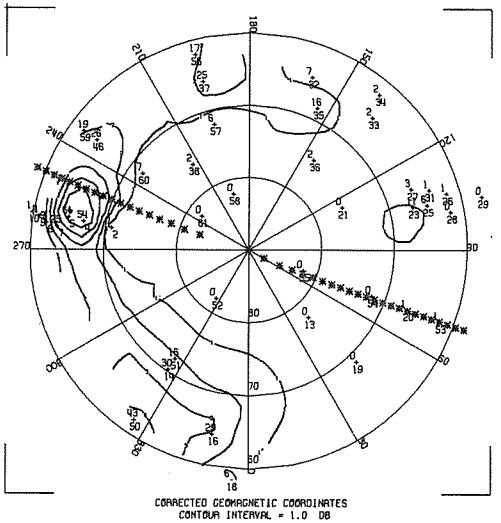

CORRECTED GEOMAGNETIC COORDINATES
CONTOUR INTERVAL = 1.0 DB

CONTOUR PLOT OF AURORAL ABSORPTION
JANUARY 17,1969 1835 UT

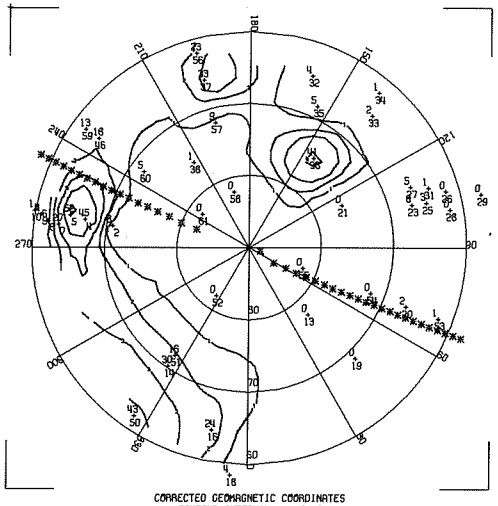

CORRECTED GEOMAGNETIC COORDINATES
CONTOUR INTERVAL = 1.0 DB

CONTOUR PLOT OF AURORAL ABSORPTION
JANUARY 17,1969 1850 UT

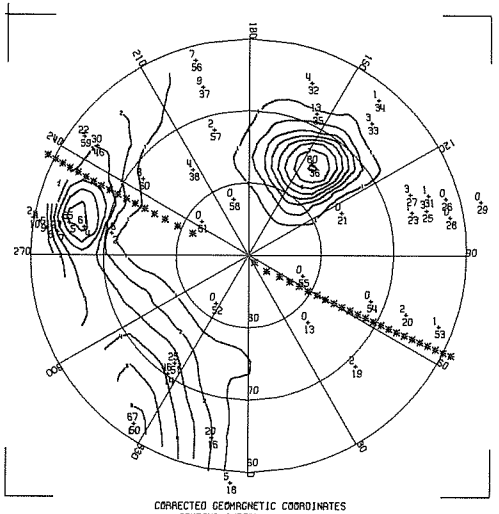

CORRECTED GEOMAGNETIC COORDINATES
CONTOUR INTERVAL = 1.0 DB

CONTOUR PLOT OF AURORAL ABSORPTION
JANUARY 17,1969 1925 UT

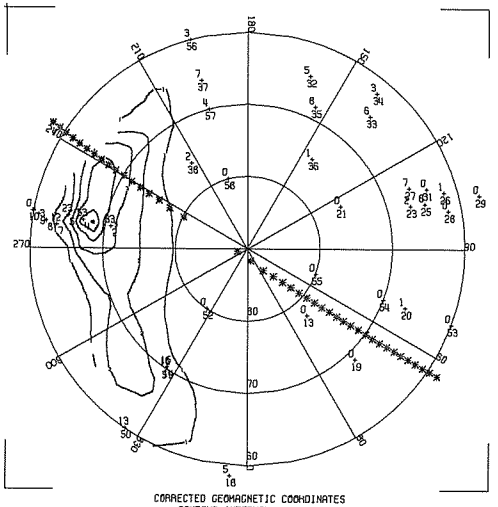

CORRECTED GEOMAGNETIC COORDINATES
CONTOUR INTERVAL = 1.0 DB

CONTOUR PLOT OF AURORAL ABSORPTION
JANUARY 17,1969 1930 UT

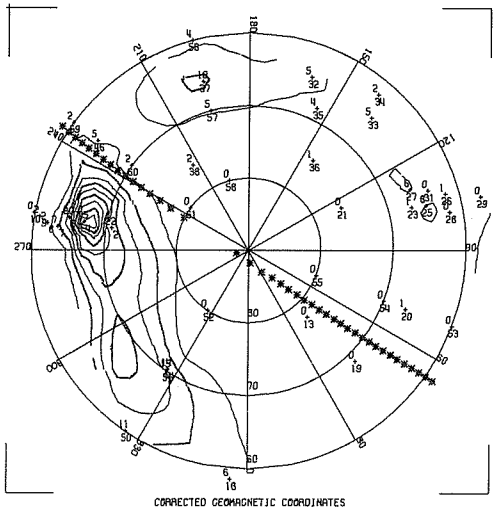

CORRECTED GEOMAGNETIC COORDINATES
CONTOUR INTERVAL = 0.5 DB

CONTOUR PLOT OF AURORAL ABSORPTION
JANUARY 17,1969 1955 UT

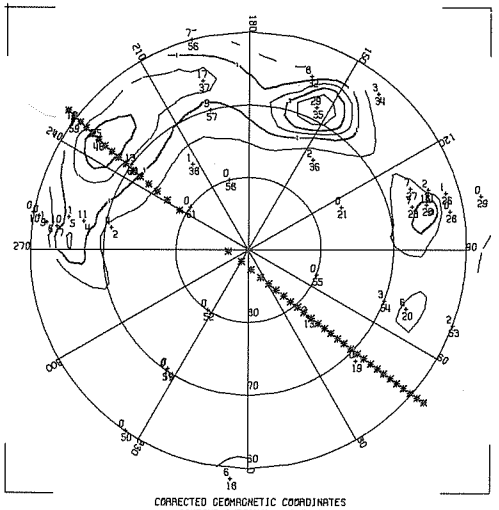

CORRECTED GEOMAGNETIC COORDINATES
CONTOUR INTERVAL = 0.5 DB

STATION IDENTIFICATION FOR IASY COMPUTER GENERATED MAPS

1	SACHS HARBOR	76.00N	270.02E
2	BAR 1	70.88	260.75
3	INUVIK	71.08	267.72
4	FORT YUKON	66.99	260.14
5	COLLEGE	64.84	259.68
6	KOTZEBUE	64.32	247.16
7	PAXSON	63.49	262.92
8	SHEEP MTN	61.92	262.22
9	ANCHORAGE	60.83	260.74
10	WILDWOOD	59.91	260.04
11	THULE	85.97	33.14
12	RESOLUTE BAY	84.14	304.32
13	GODHAVN	77.68	41.71
14	CHURCHILL	70.26	325.84
15	GREAT WHALE	67.97	353.68
16	MOOSONEE	64.40	348.81
17	VALD OR	61.00	353.09
18	OTTAWA	58.52	355.68
19	NARSSARSSUAQ	68.73	44.17
20	LEIRVOGUR	66.82	69.53
21	NY-ALESUND	75.88	114.68
22	BJORNOVA	71.34	110.51
23	TROMSO	66.78	104.84
24	KARASJOK	66.03	109.31
25	KIRUNA	64.77	104.23
26	OULU	61.77	106.07
27	KEVO	66.24	110.62
28	LYCKSELE	61.80	100.78
29	NURMIJARVI	57.14	102.96
30	UPPSALA	55.93	96.96
31	SODANKLYA	63.93	108.46
32	NORILSK	64.60	160.08
33	AMDERMA	65.09	137.26
34	SALEKHARD	62.07	140.17
35	DIXSON	68.27	154.53
36	HEISS ISLAND	74.80	144.47
37	TIXIE	65.84	195.40
38	NP-16 (JAN 17)	75.90	213.25
39	NP-16 (FEB 2)	75.90	213.25
40	NP-16 (MAR 30)	76.08	214.63
41	NP-16 (MAR 31)	76.08	214.63
42	NP-16 (OCT 1)	78.64	205.48
43	NP-16 (OCT 27)	77.76	204.81
44	SOUTH UIST	57.56	75.94
46	CAPE SCHMIDT	64.26	234.08

JANUARY 25, 1969, 2345 UT

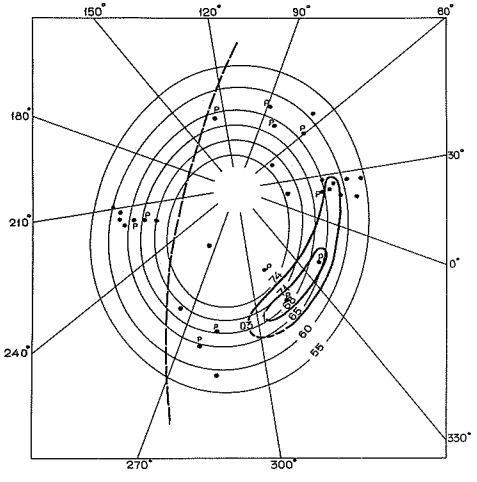

JANUARY 25, 1969, 2350 UT

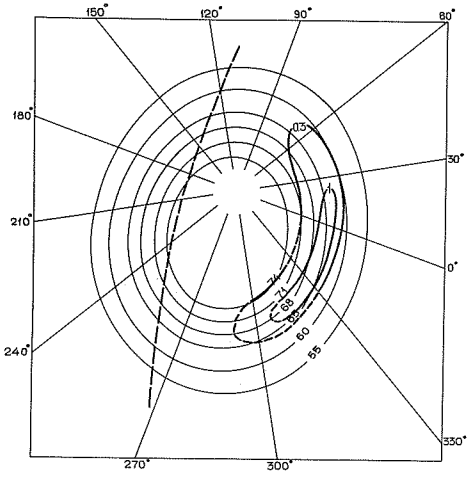

JANUARY 26, 1969, 0000 UT

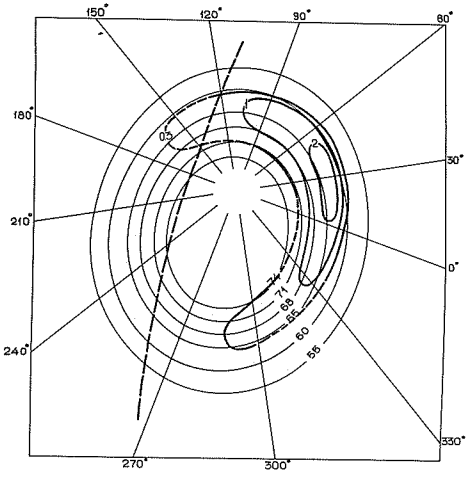

JANUARY 26, 1969, 0015 UT

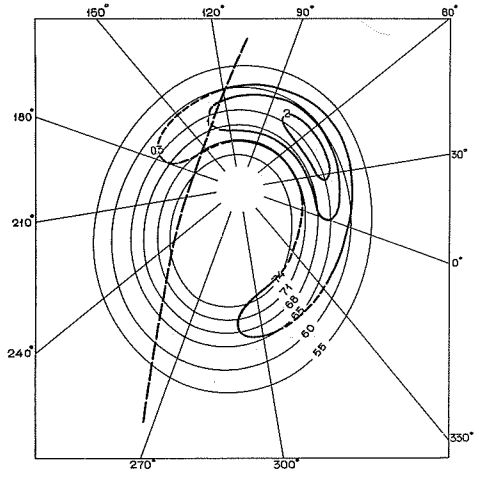

JANUARY 26, 1969, 0030 UT

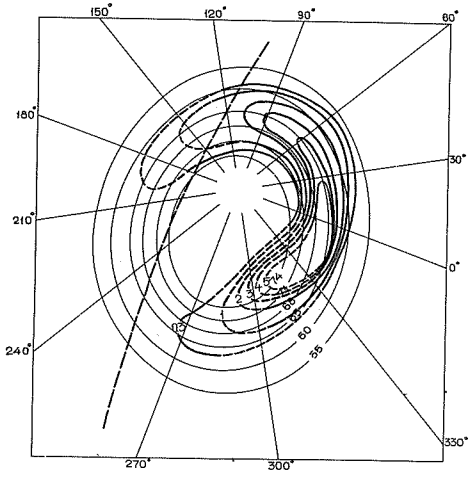

JANUARY 26, 1969, 0045 UT

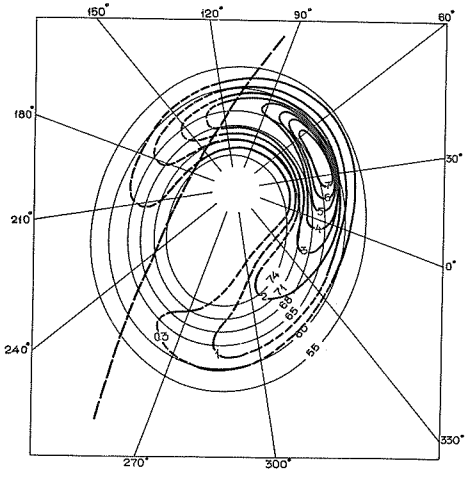

JANUARY 26, 1969, 0100 UT

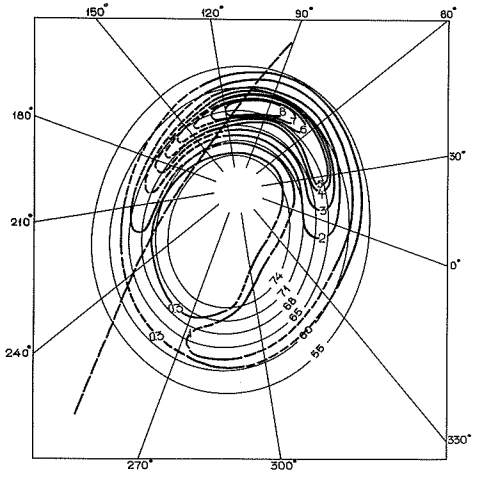

JANUARY 26, 1969, 0115 UT

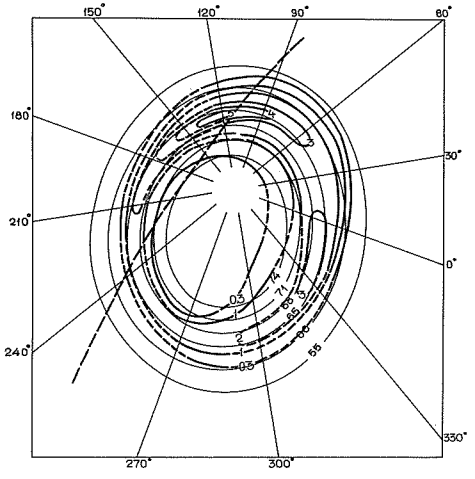

JANUARY 26, 1969, 0130 UT

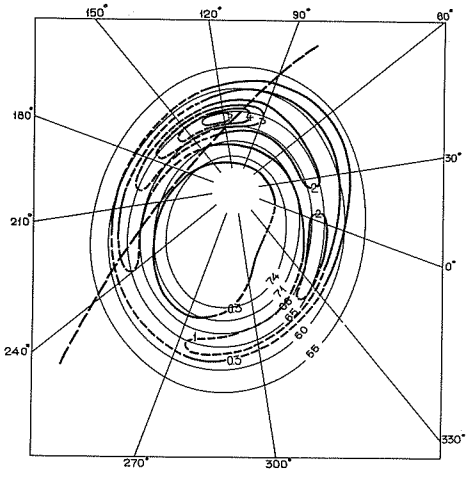

JANUARY 26, 1969, 0145 UT

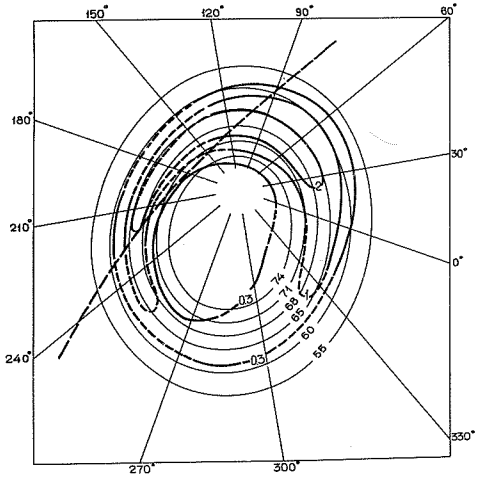

JANUARY 26, 1969, 0200 UT

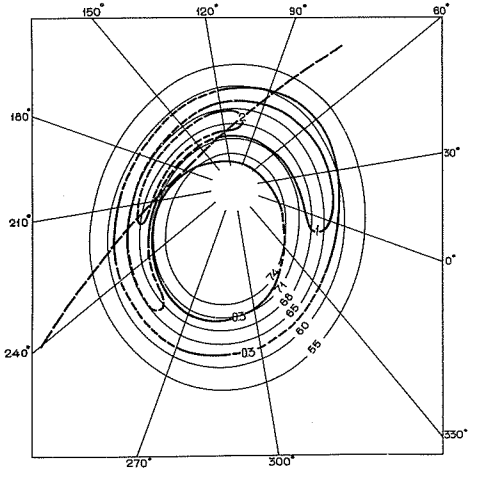

JANUARY 26, 1969, 0215 UT

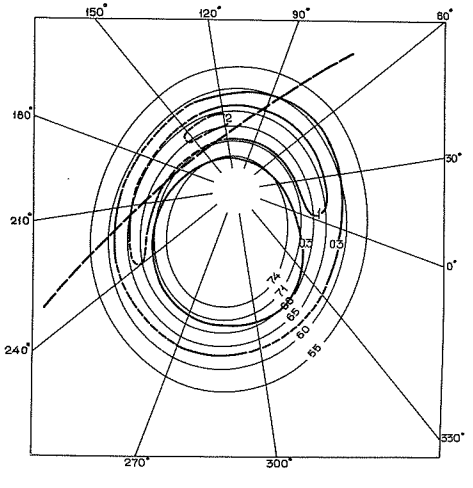

CONTOUR PLOT OF AURORAL ABSORPTION
FEBRUARY 2,1969 1800 UT

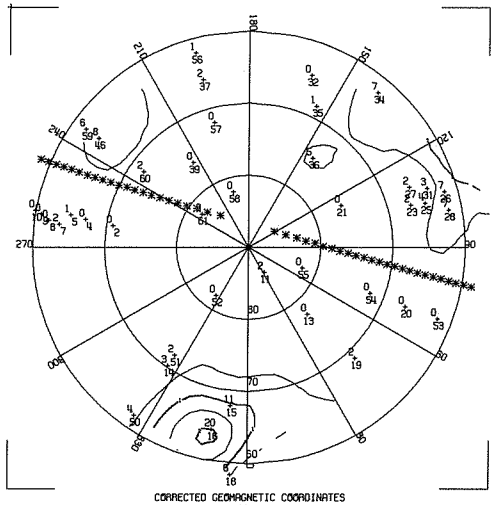

CORRECTED GEOMAGNETIC COORDINATES
CONTOUR INTERVAL = 0.5 DB

CONTOUR PLOT OF AURORAL ABSORPTION
FEBRUARY 2,1969 1810 UT

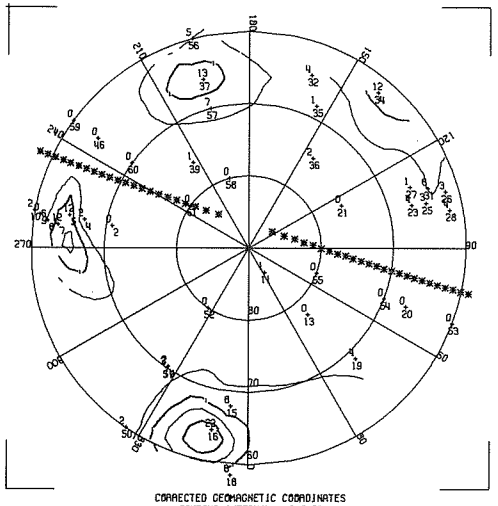

CORRECTED GEOMAGNETIC COORDINATES
CONTOUR INTERVAL = 0.5 DB

CONTOUR PLOT OF AURORAL ABSORPTION
FEBRUARY 2,1969 1815 UT

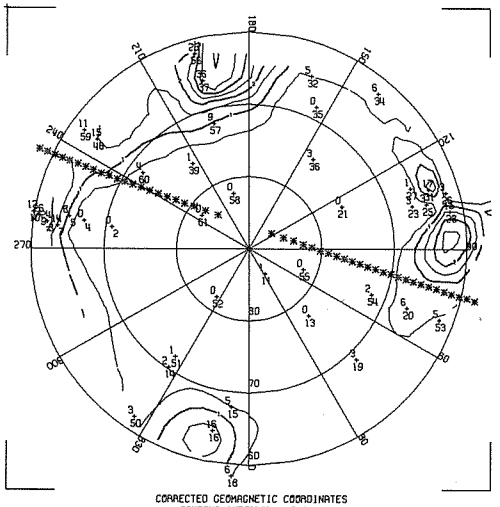

CORRECTED GEOMAGNETIC COORDINATES
CONTOUR INTERVAL = 0.5 DB

CONTOUR PLOT OF AURORAL ABSORPTION
FEBRUARY 2,1969 1825 UT

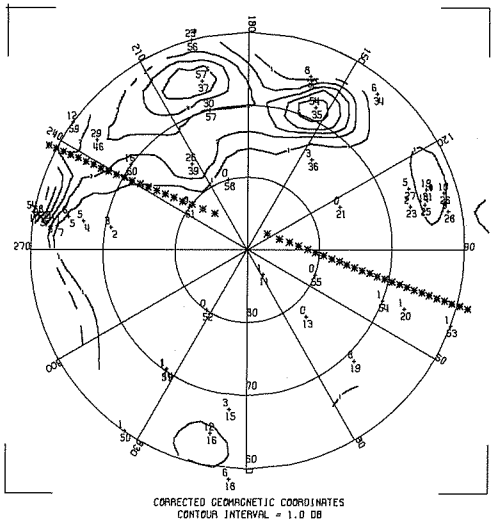

CORRECTED GEOMAGNETIC COORDINATES
CONTOUR INTERVAL = 1.0 DB

CONTOUR PLOT OF AURORAL ABSORPTION
FEBRUARY 2,1969 1830 UT

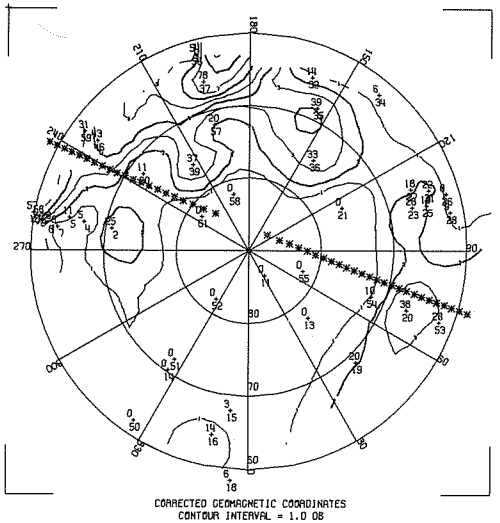

CORRECTED GEOMAGNETIC COORDINATES
CONTOUR INTERVAL = 1.0 DB

CONTOUR PLOT OF AURORAL ABSORPTION
FEBRUARY 2,1969 1845 UT

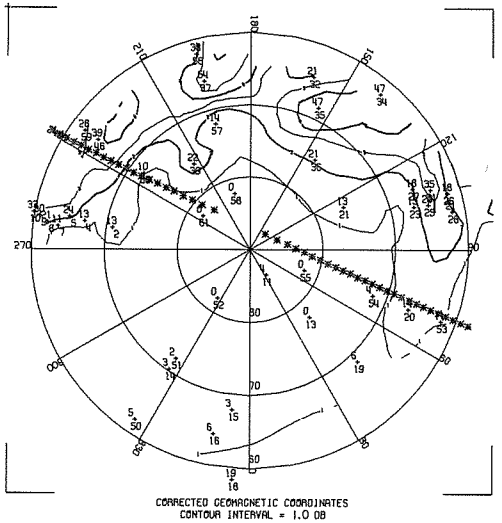

CORRECTED GEOMAGNETIC COORDINATES
CONTOUR INTERVAL = 1.0 DB

CONTOUR PLOT OF AURORAL ABSORPTION
FEBRUARY 2,1969 1850 UT

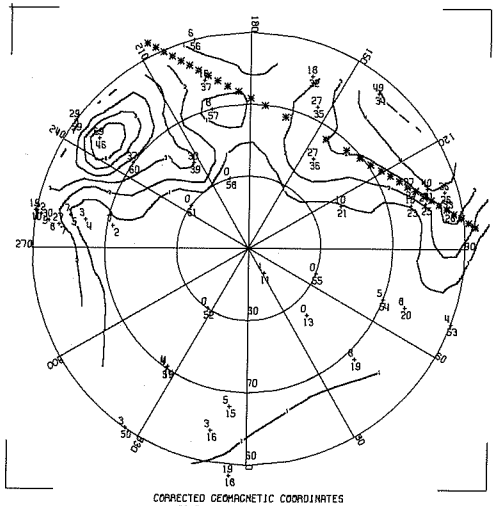

CORRECTED GEOMAGNETIC COORDINATES
CONTOUR INTERVAL = 1.0 DB

CONTOUR PLOT OF AURORAL ABSORPTION
FEBRUARY 2,1969 1900 UT

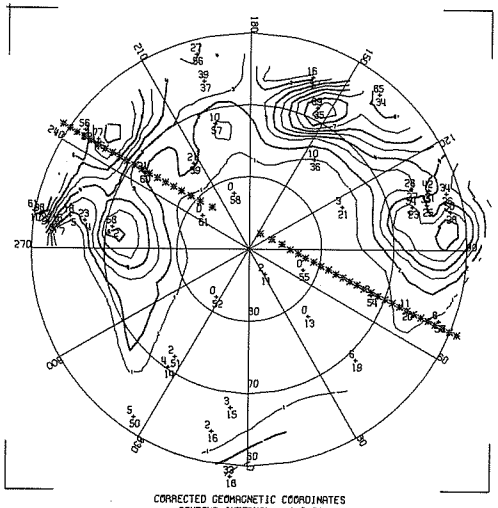

CORRECTED GEOMAGNETIC COORDINATES
CONTOUR INTERVAL = 1.0 DB

CONTOUR PLOT OF AURORAL ABSORPTION
FEBRUARY 2,1969 1910 UT

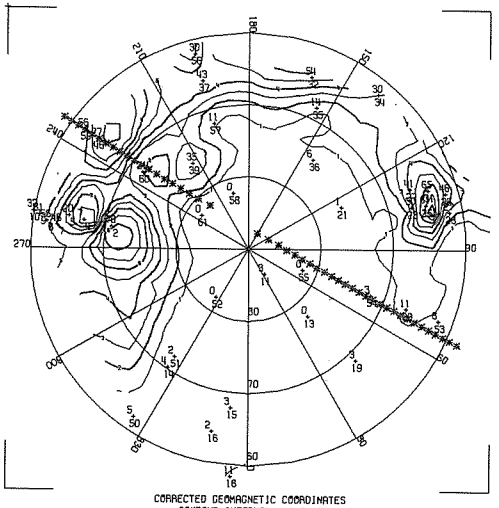

CORRECTED GEOMAGNETIC COORDINATES
CONTOUR INTERVAL = 1.0 DB

CONTOUR PLOT OF AURORAL ABSORPTION
FEBRUARY 2,1969 1925 UT

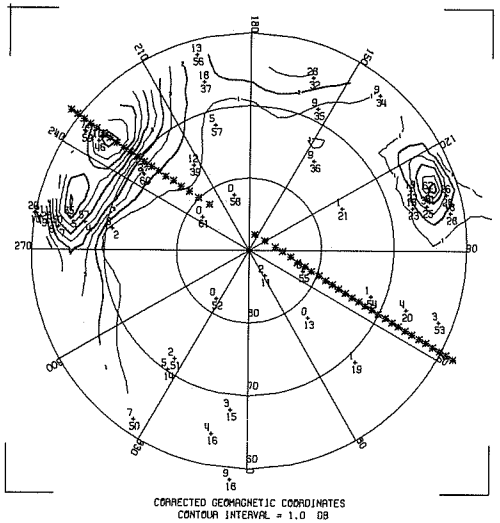

CORRECTED GEOMAGNETIC COORDINATES
CONTOUR INTERVAL = 1.0 DB

CONTOUR PLOT OF AURORAL ABSORPTION
FEBRUARY 2,1969 1940 UT

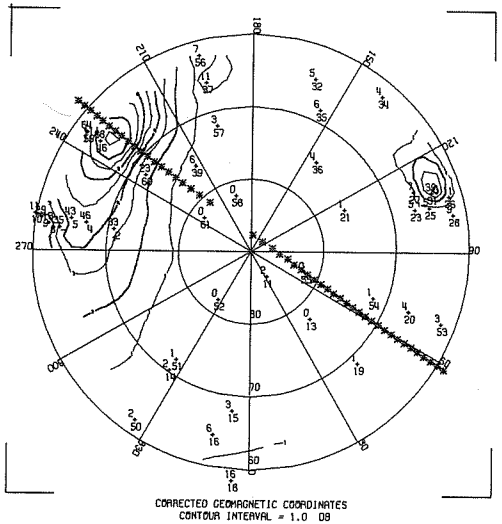

CORRECTED GEOMAGNETIC COORDINATES
CONTOUR INTERVAL = 1.0 DB

CONTOUR PLOT OF AURORAL ABSORPTION
FEBRUARY 2,1969 1955 UT

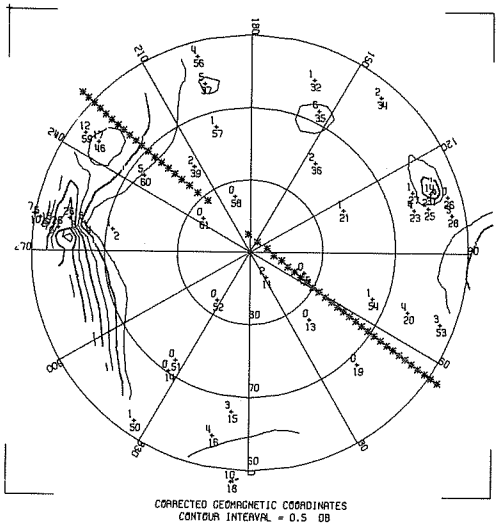

CORRECTED GEOMAGNETIC COORDINATES
CONTOUR INTERVAL = 0.5 DB

FEBRUARY 3, 1969, 0615 UT

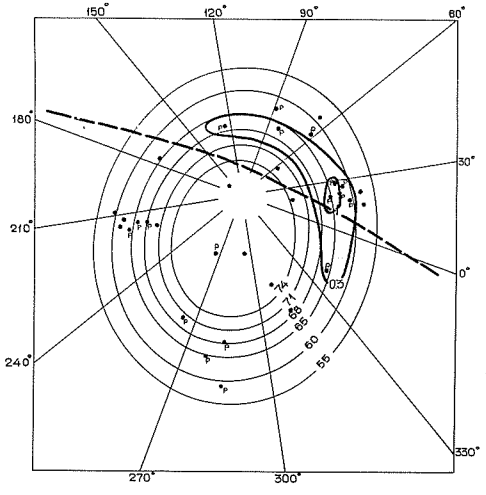

FEBRUARY 3, 1969, 0630 UT

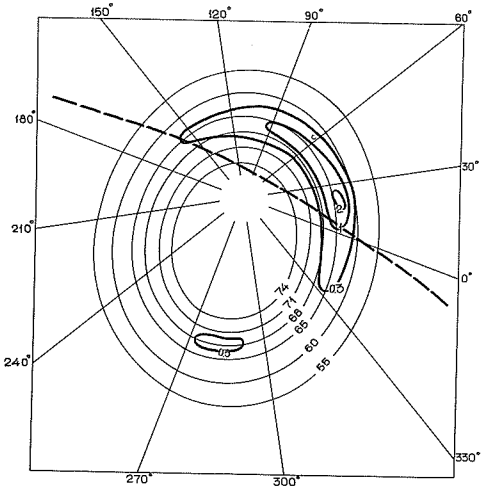

FEBRUARY 3, 1969, 0645 UT

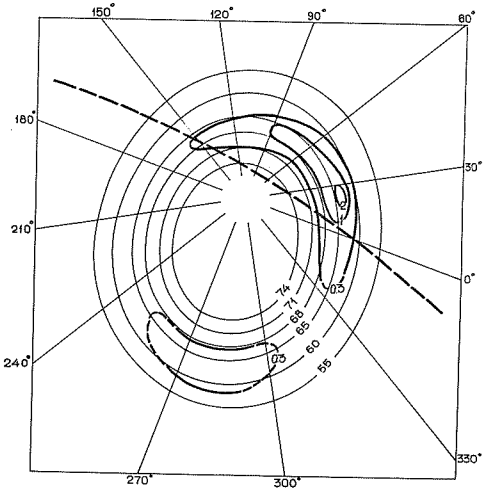

FEBRUARY 3, 1969, 0700 UT

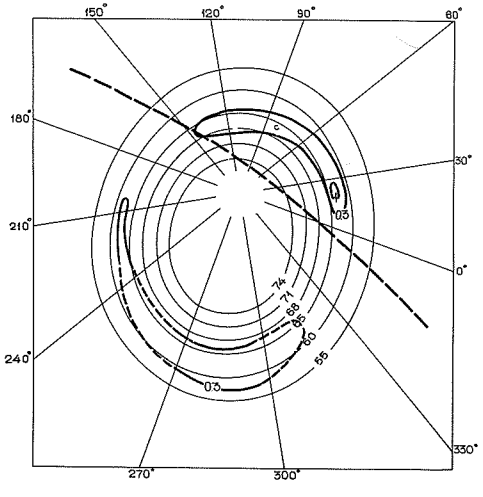

FEBRUARY 3, 1969, 0715 UT

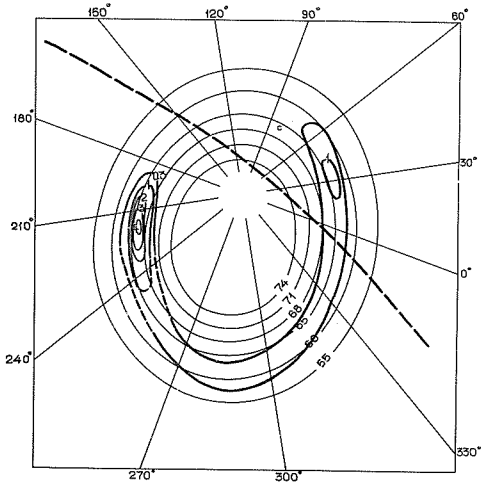

FEBRUARY 3, 1969, 0730 UT

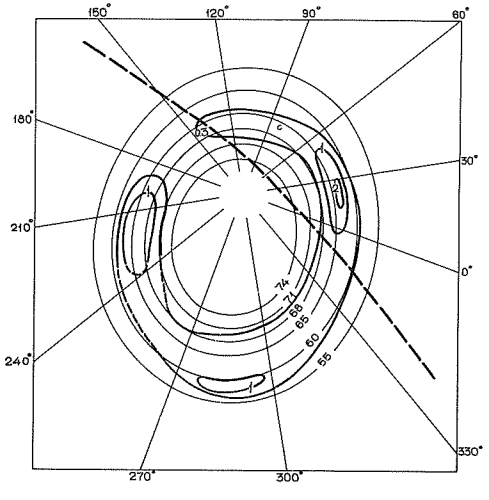

FEBRUARY 3, 1969, 0745 UT

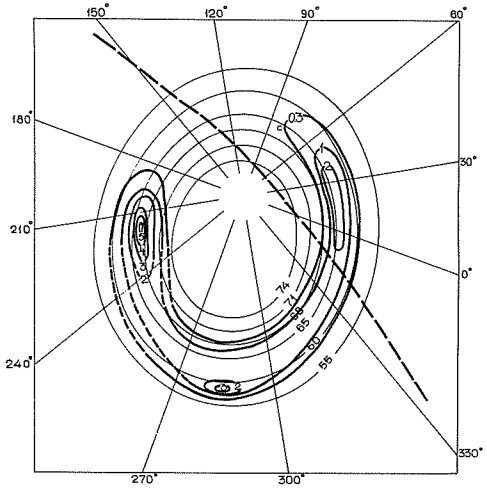

FEBRUARY 3, 1969, 0800 UT

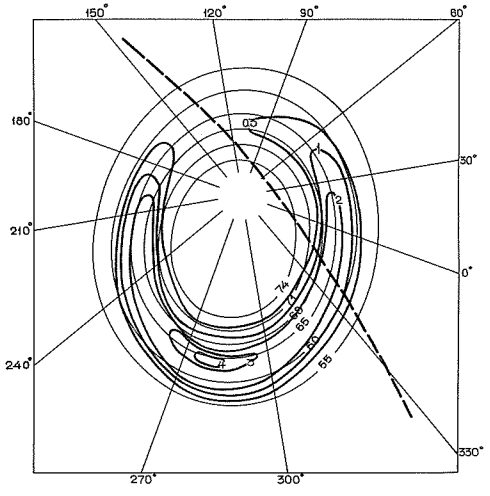

FEBRUARY 3, 1969, 0815 UT

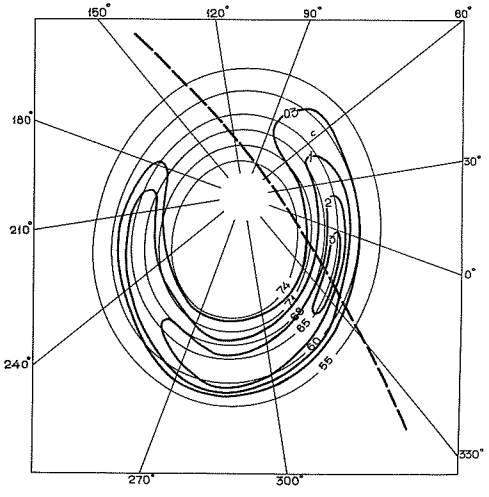

FEBRUARY 3, 1969, 0830 UT

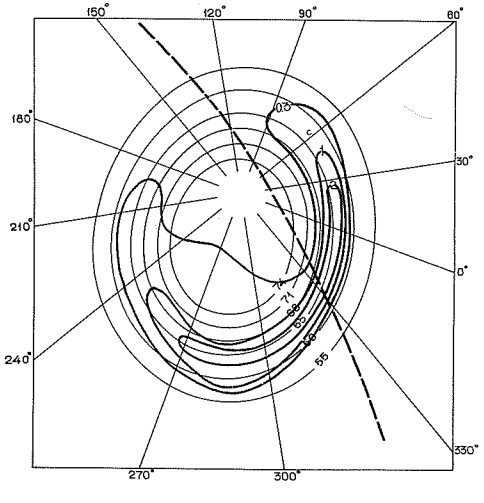

FEBRUARY 3, 1969, 0845 UT

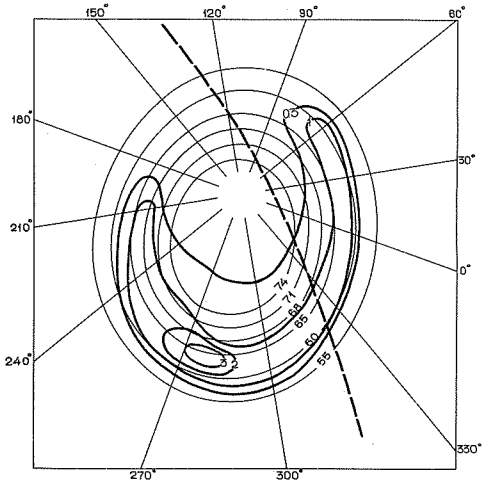

FEBRUARY 3, 1969, 0900 UT

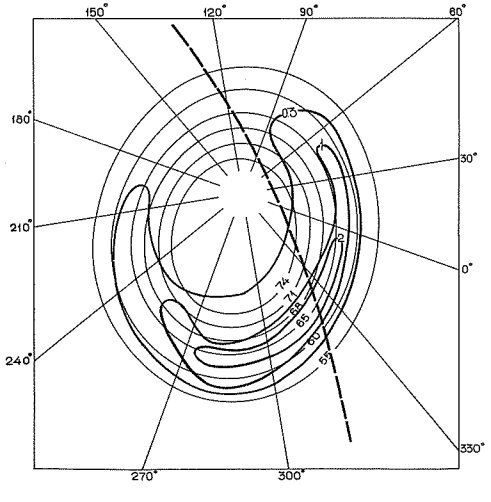

FEBRUARY 3, 1969, 0915 UT

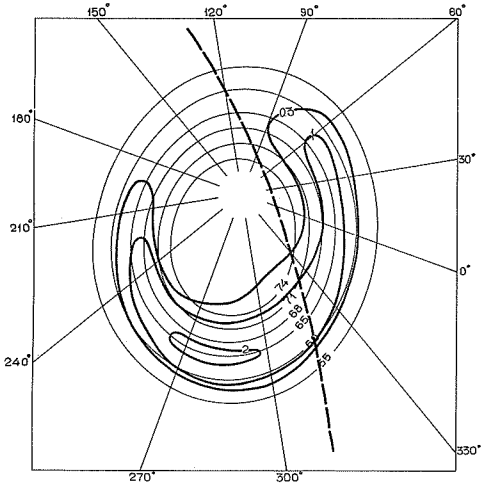

FEBRUARY 3, 1969, 0930 UT

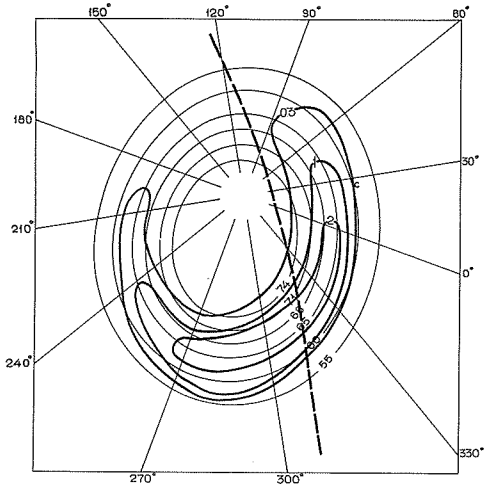

FEBRUARY 3, 1969, 0945 UT

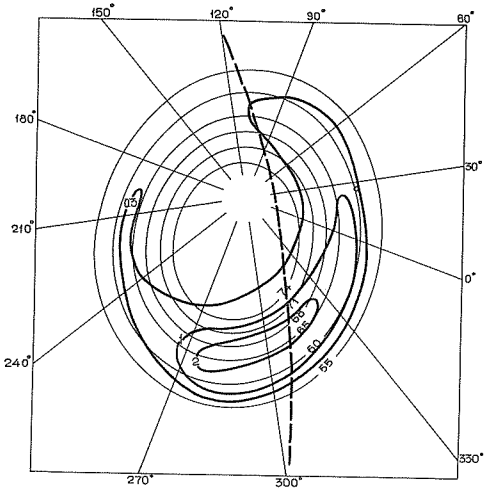

FEBRUARY 3, 1969, 1000 UT

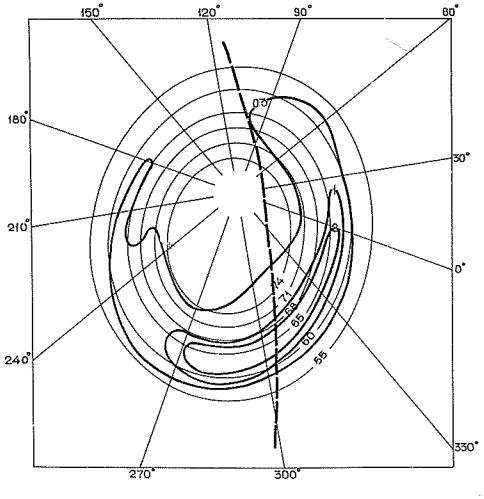

FEBRUARY 3, 1969, 1015 UT

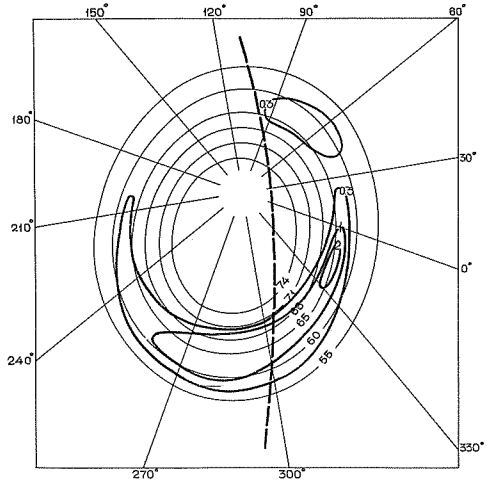

FEBRUARY 3, 1969, 1030 UT

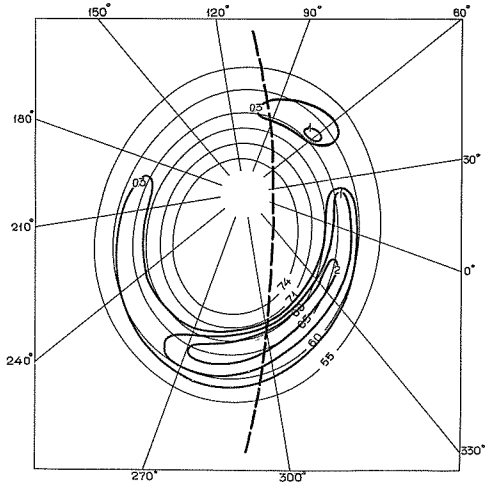

February 3, 1969, 1800 UT

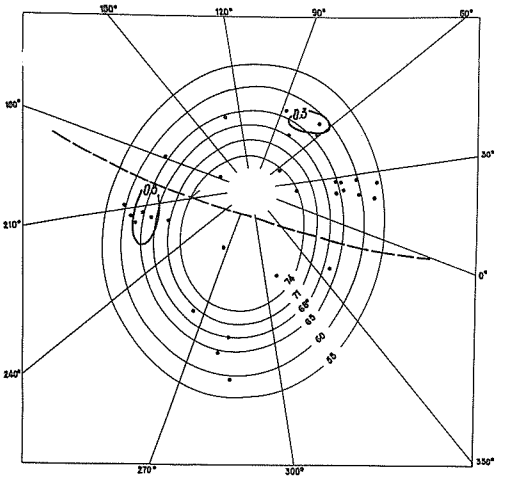

February 3, 1969, 1815 UT

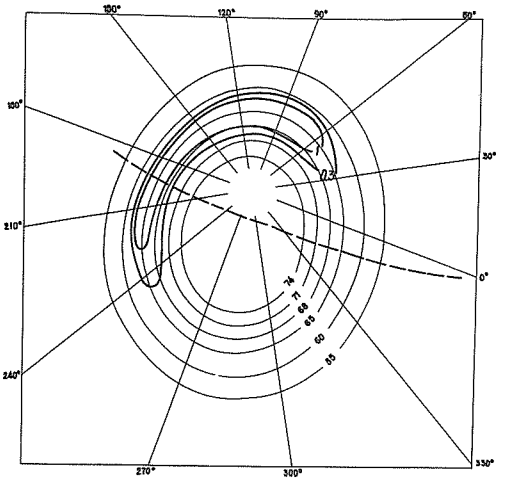

February 3, 1969, 1830 UT

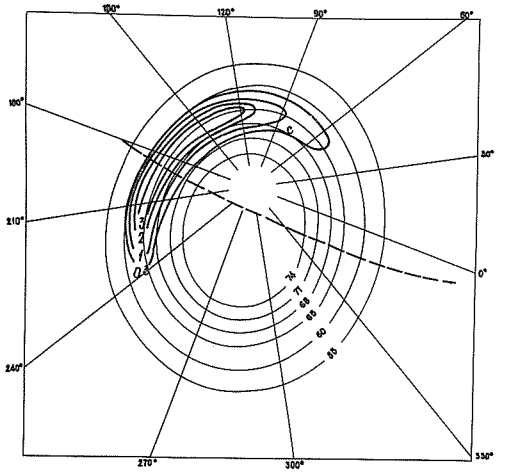

February 3, 1969, 1845 UT

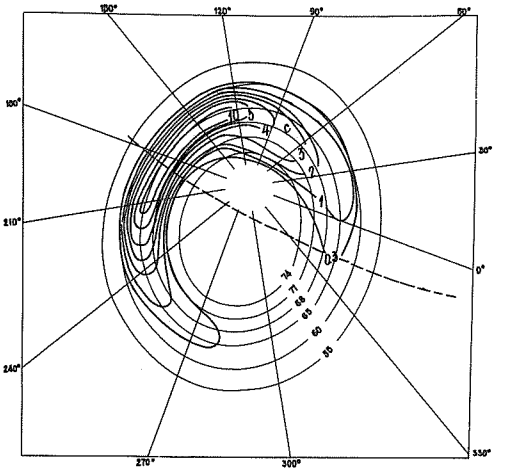

February 3, 1969, 1900 UT

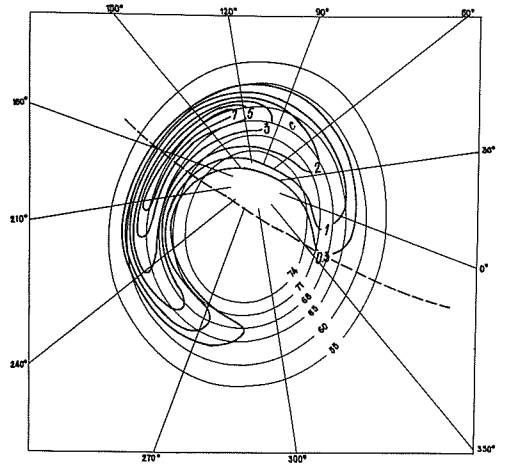

February 3, 1969, 1915 UT

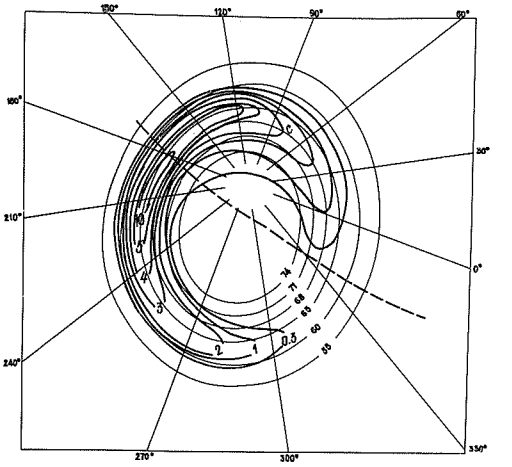

February 3, 1969, 1930 UT

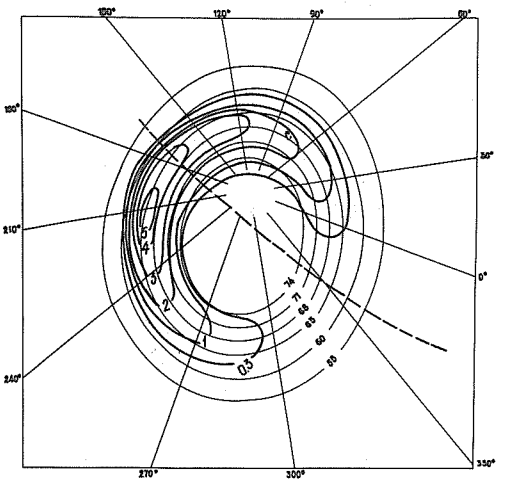

February 3, 1969, 1945 UT

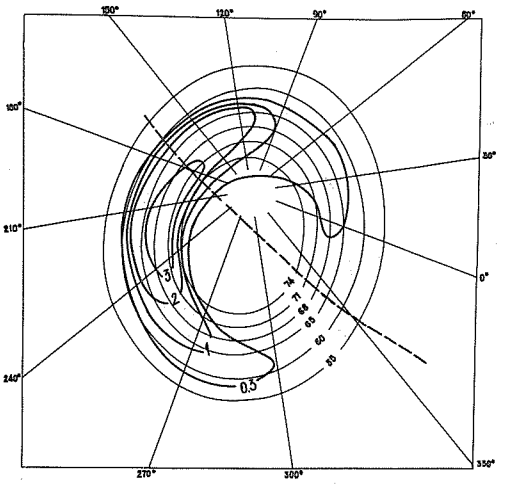

February 3, 1969, 2000 UT

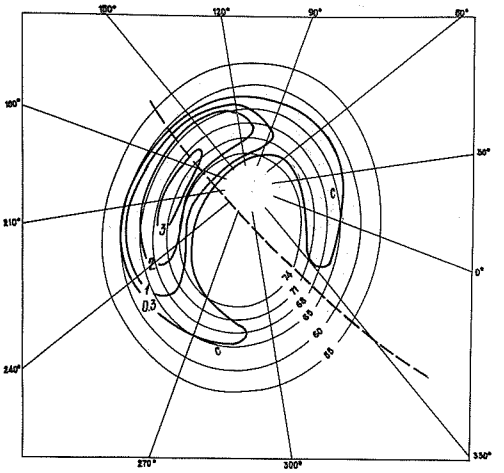

February 3, 1969, 2015 UT

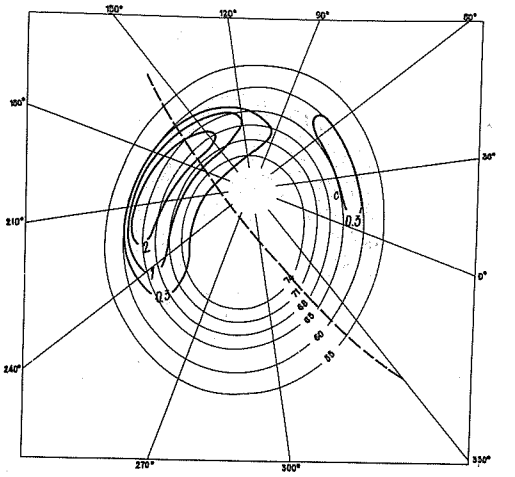

February 3, 1969, 2030 UT

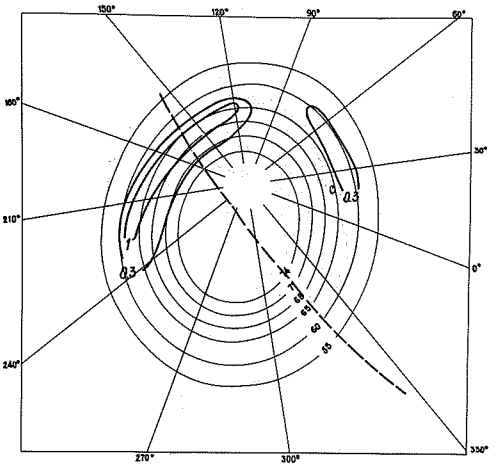

February 3, 1969, 2045 UT

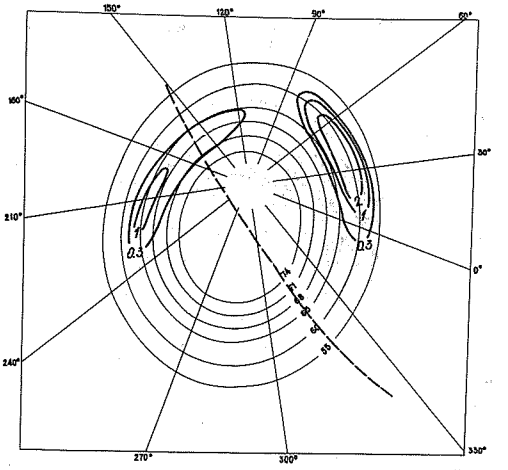

February 3, 1969, 2100 UT

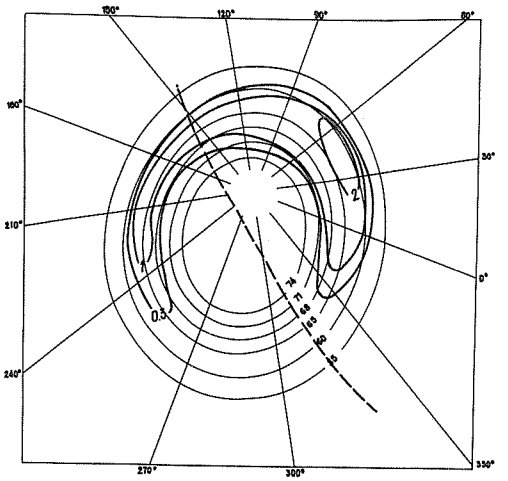

February 3, 1969, 2115 UT

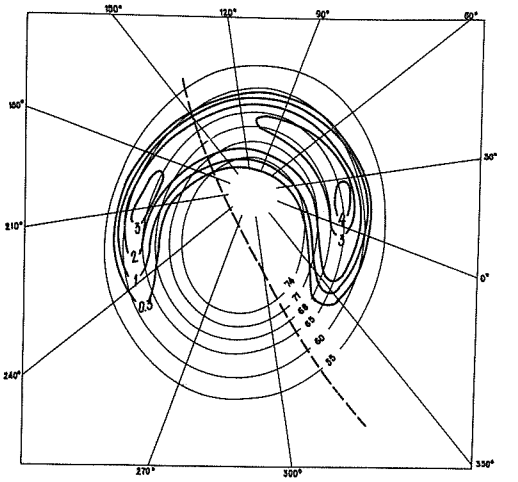

February 3, 1969, 2130 UT

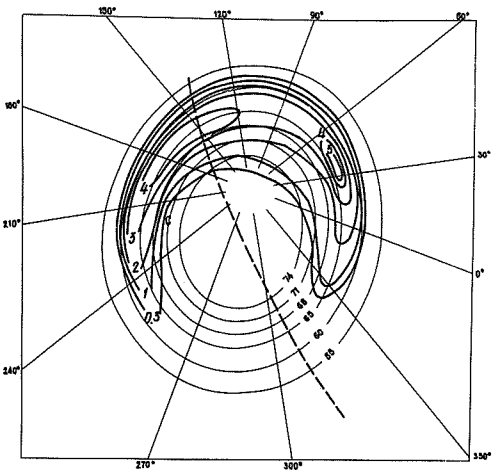

February 3, 1969, 2145 UT

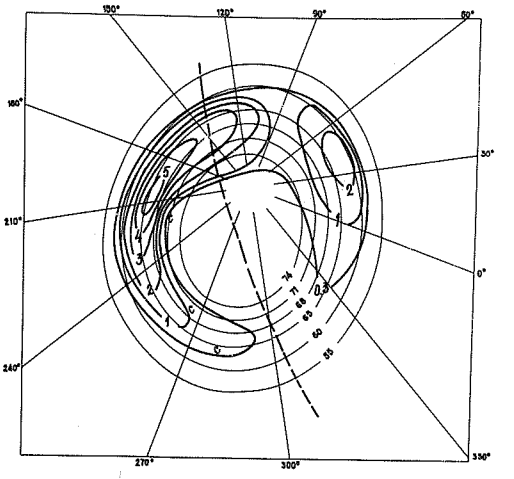

February 3, 1969, 2200 UT

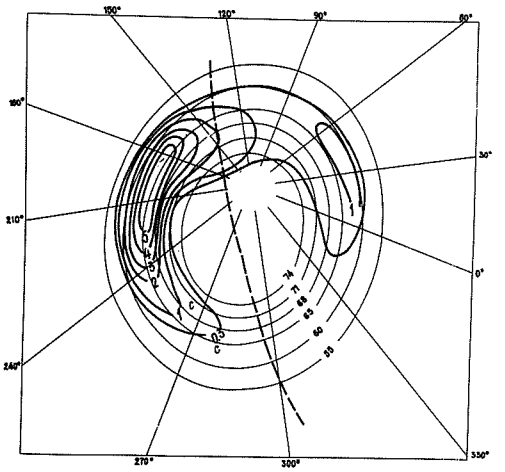

February 3, 1969, 2215 UT

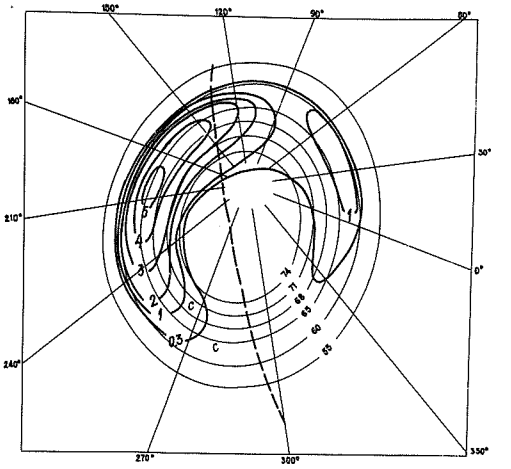

February 3, 1969, 2230 UT

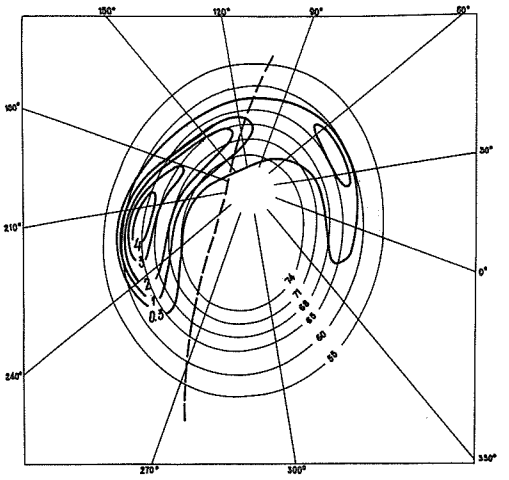

February 3, 1969, 2245 UT

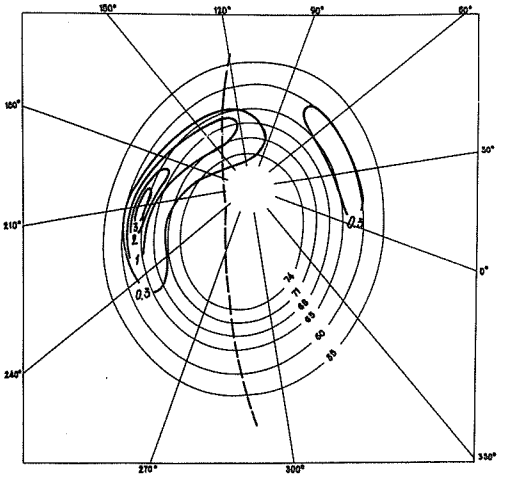

February 3, 1969, 2300 UT

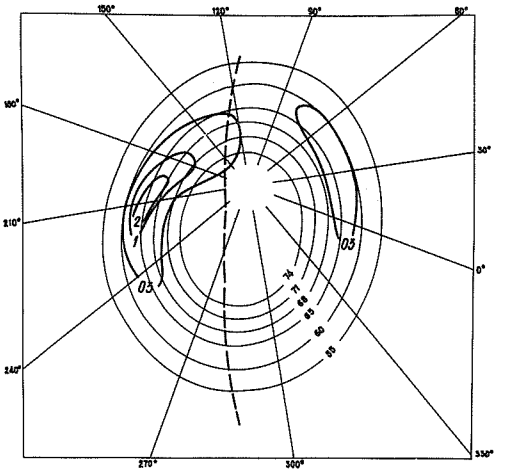

February 3, 1969, 2315 UT

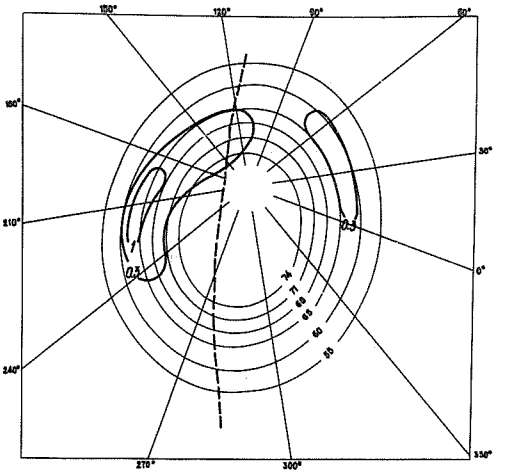

FEBRUARY 15, 1969, 0245 UT

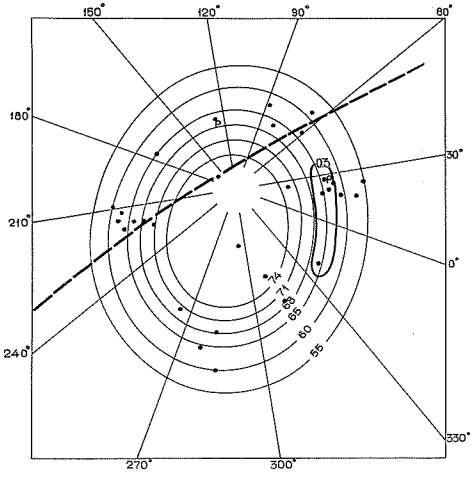

FEBRUARY 15, 1969, 0300 UT

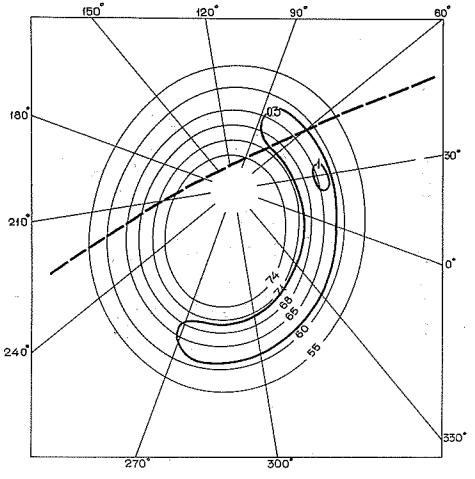

FEBRUARY 15, 1969, 0315 UT

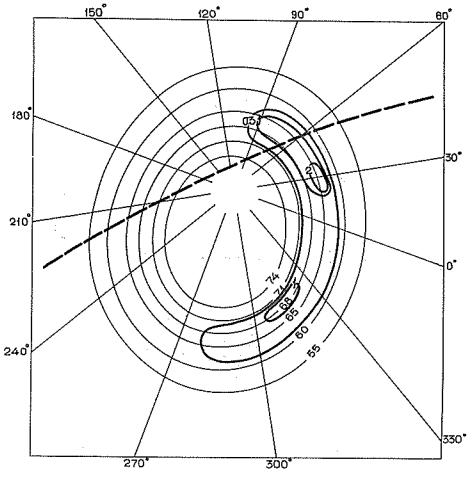

FEBRUARY 15, 1969, 0330 UT

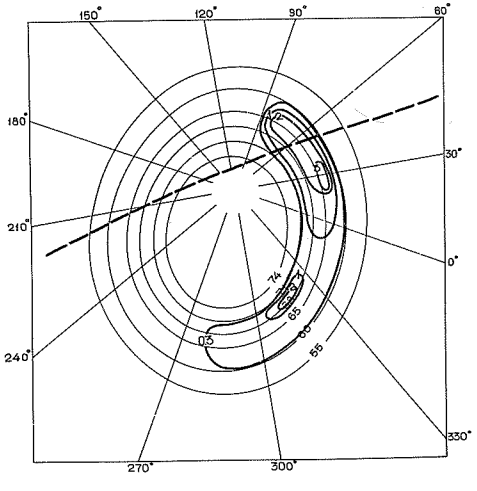

FEBRUARY 15, 1969, 0345 UT

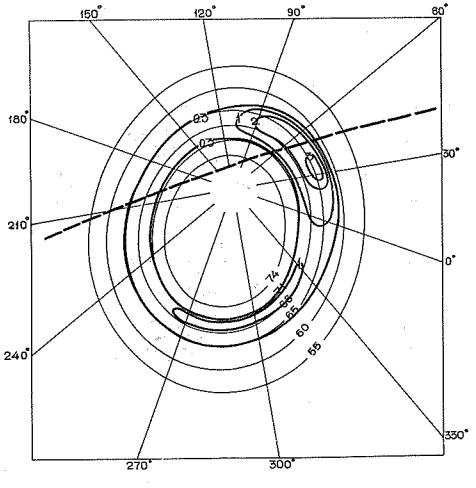

FEBRUARY 15, 1969, 0400 UT

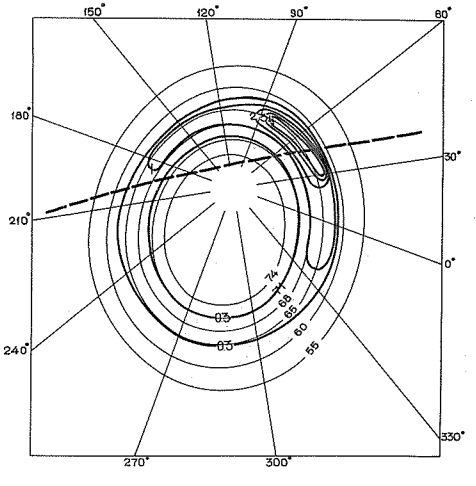

FEBRUARY 15, 1969, 0415 UT

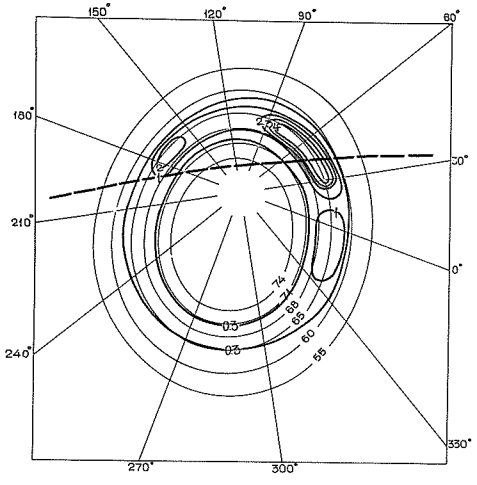

FEBRUARY 15, 1969, 0430 UT

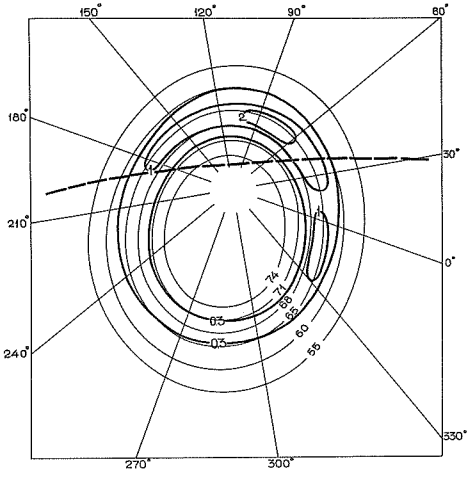

FEBRUARY 15, 1969, 0445 UT

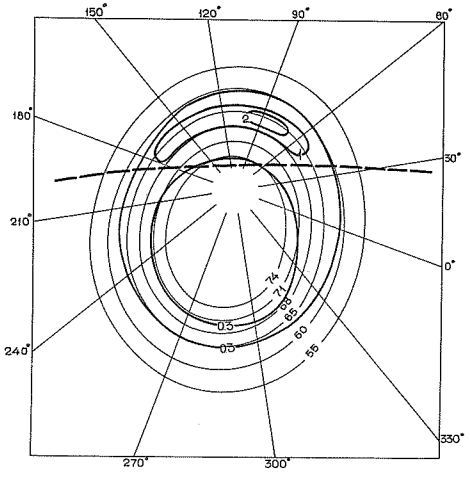

FEBRUARY 15, 1969, 0500 UT

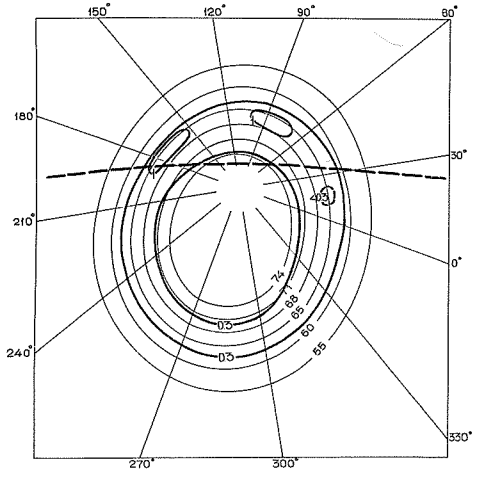

FEBRUARY 15, 1969, 0515 UT

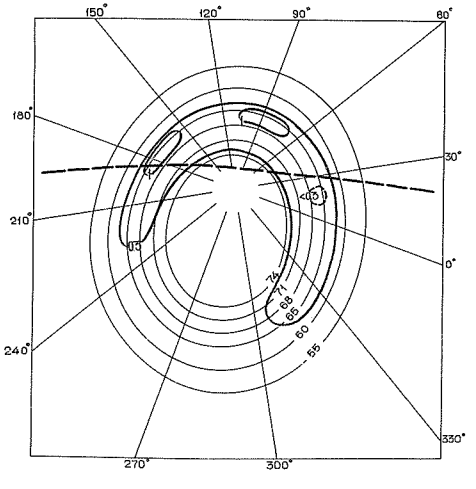

FEBRUARY 15, 1969, 0530 UT

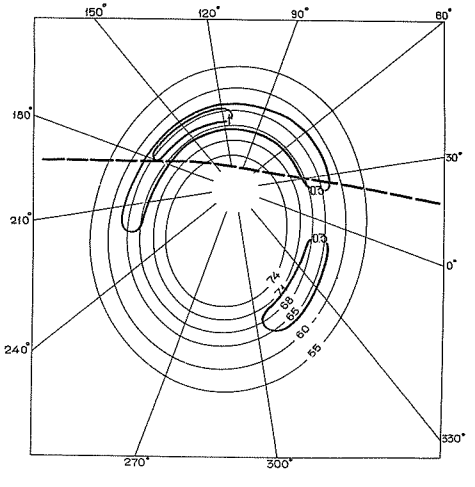

February 28, 1969, 2130 UT

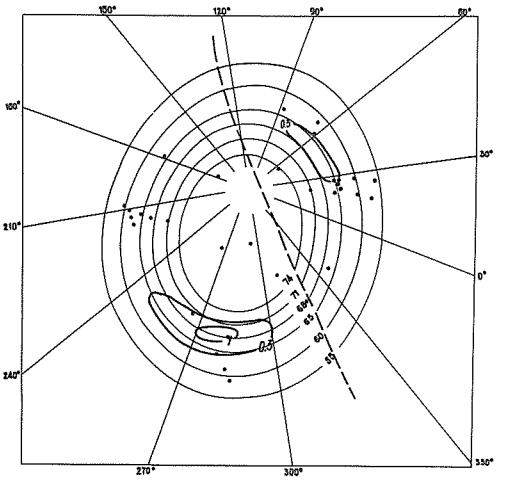

February 28, 1969, 2145 UT

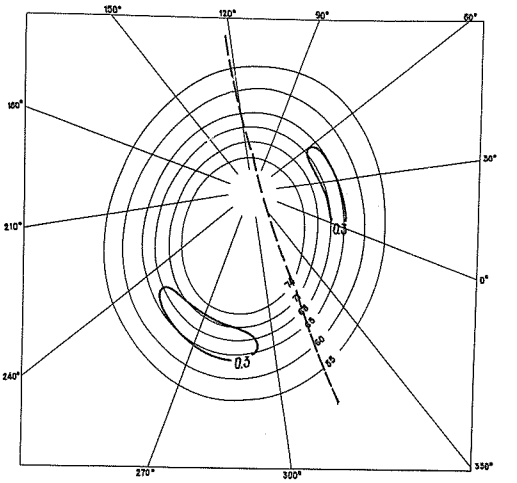

February 28, 1969, 2200 UT

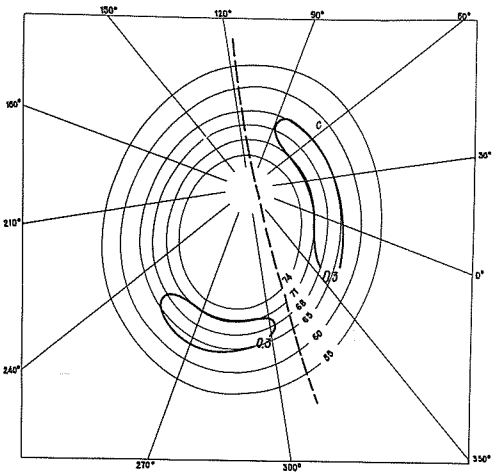

February 28, 1969, 2215 UT

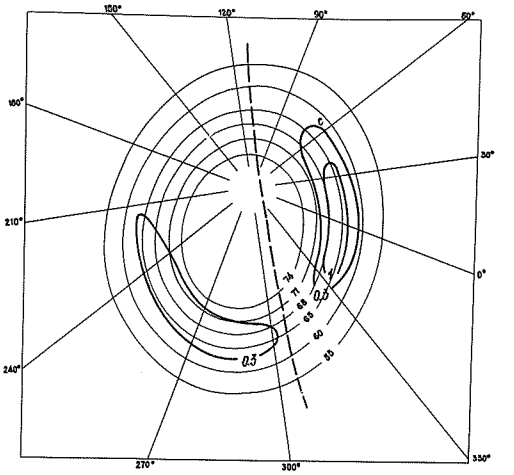

February 28, 1969, 2230 UT

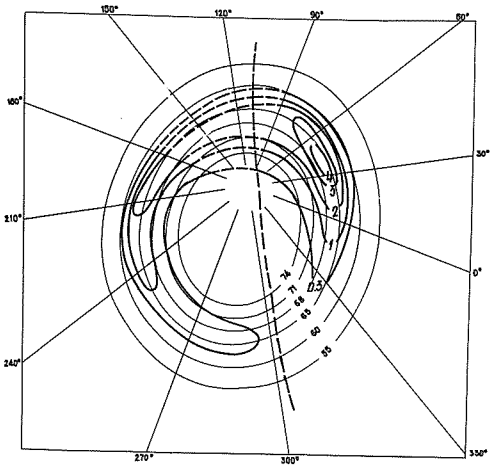

February 28, 1969, 2245 UT

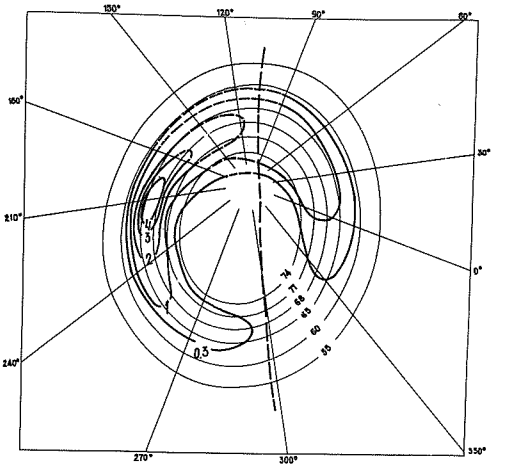

February 28, 1969, 2300 UT

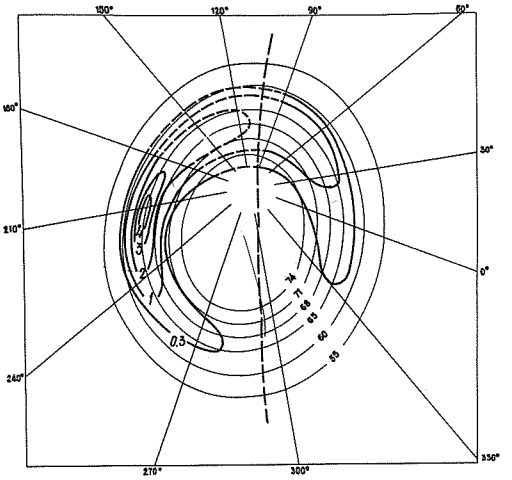

February 28, 1969, 2315 UT

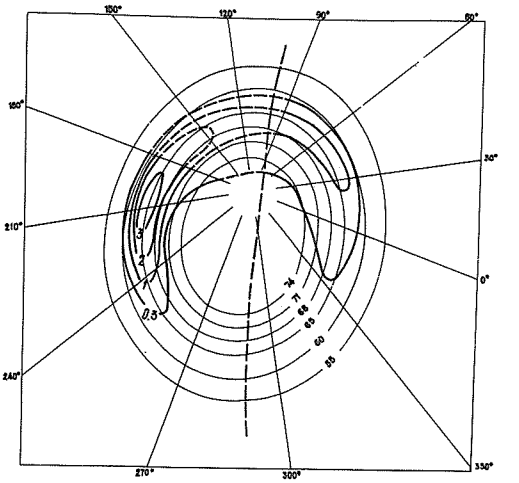

February 28,1969, 2330 UT

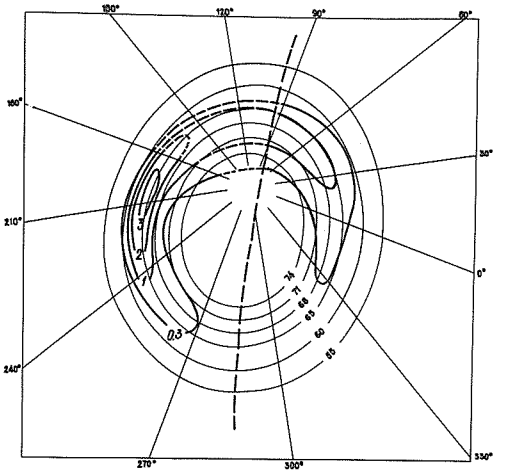

February 28, 1969, 2345 UT

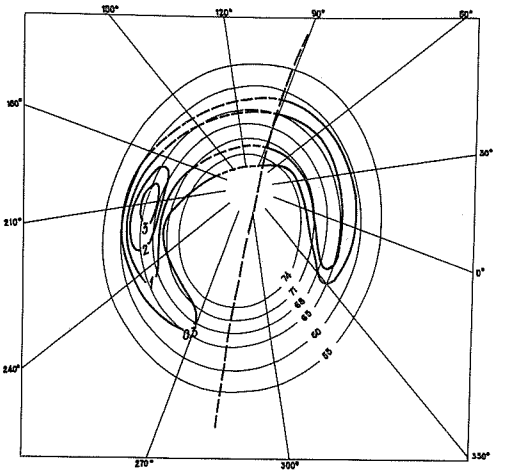

March 1, 1969, 0000 UT

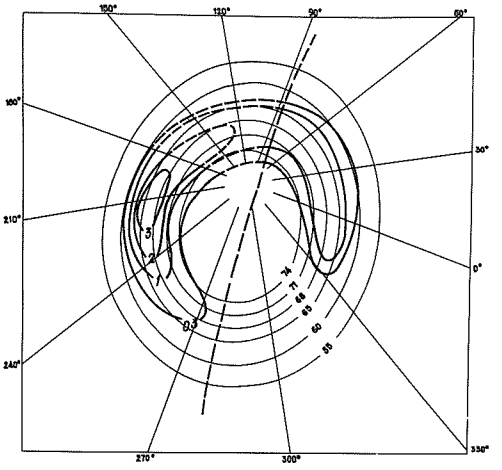

March 1, 1969, 0015 UT

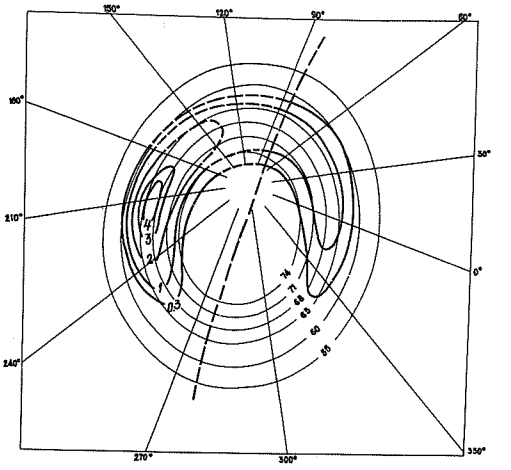

March 1, 1969, 0030 UT

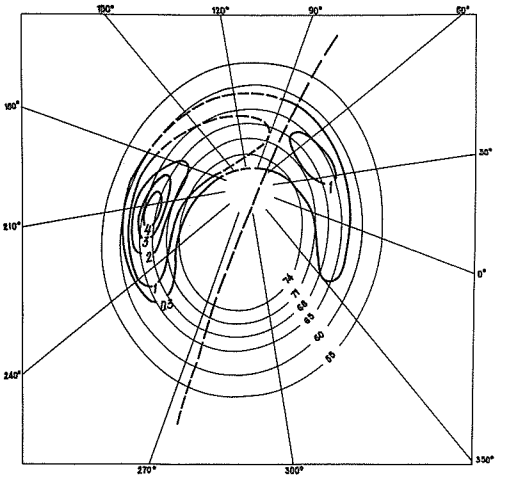

March 1, 1969, 0045 UT

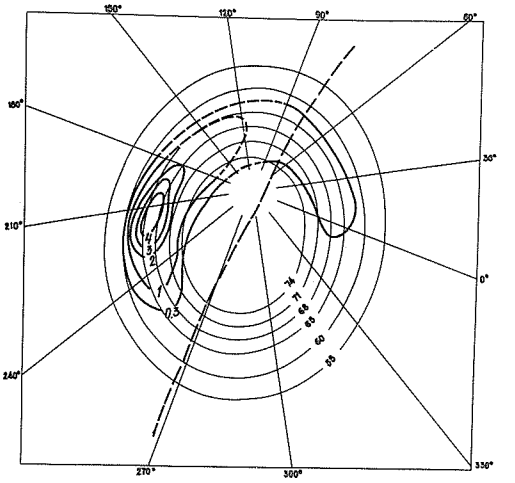

March 1, 1969, 0100 UT

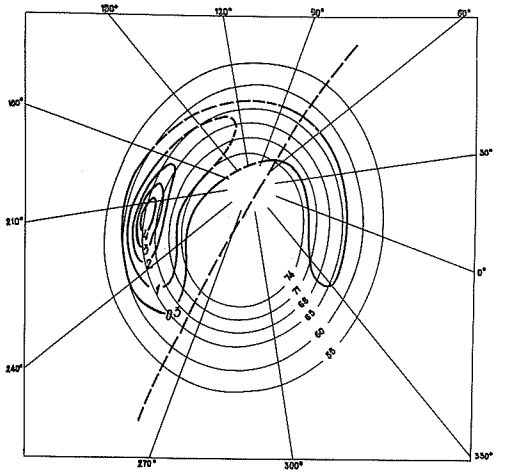

March 1, 1969, 0115 UT

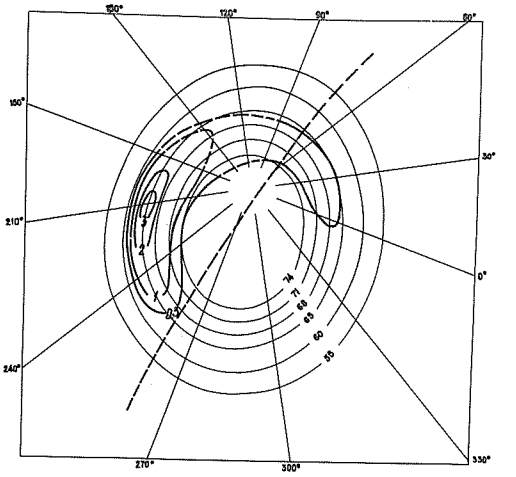

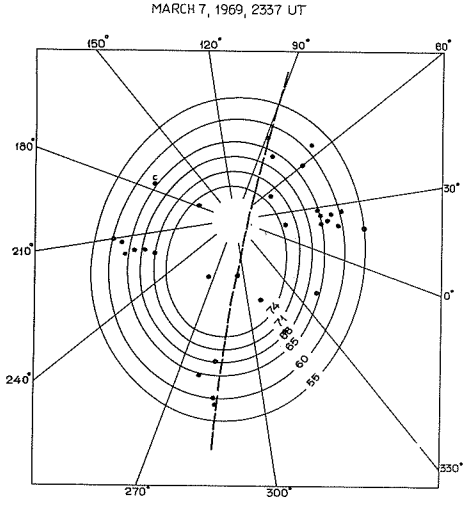
MARCH 7, 1969, 2337 UT
150°
120°
90°
60°
180°
30°
210°
0°
240°
330°
270°
300°
74
71
68
65
60
55

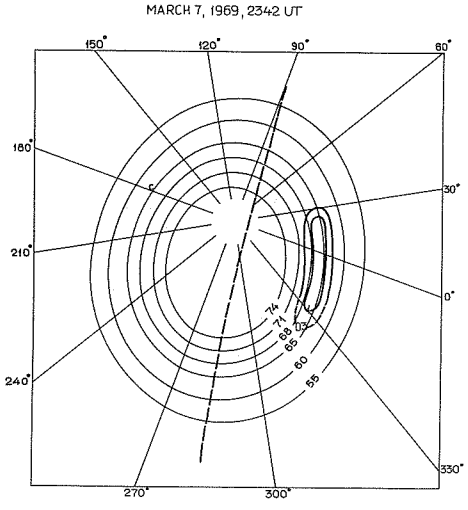
MARCH 7, 1969, 2342 UT
150°
120°
90°
60°
180°
30°
210°
0°
240°
330°
270°
300°
74
71
68
65
60
55

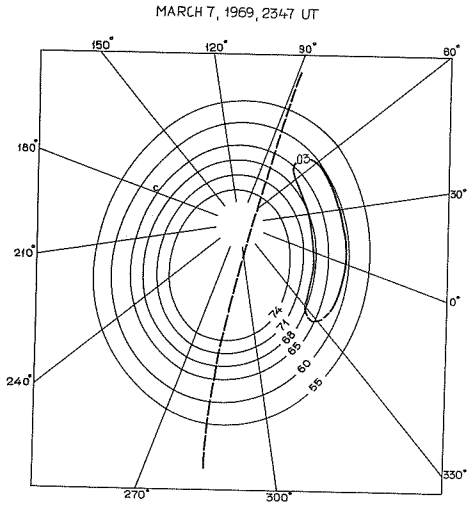
MARCH 7, 1969, 2347 UT
150°
120°
90°
60°
180°
30°
210°
0°
240°
330°
270°
300°
74
71
68
65
60
55

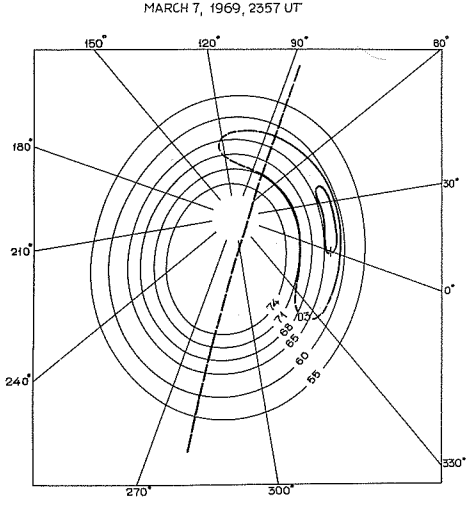
MARCH 7, 1969, 2357 UT
150°
120°
90°
60°
180°
30°
210°
0°
240°
330°
270°
300°
74
71
68
65
60
55

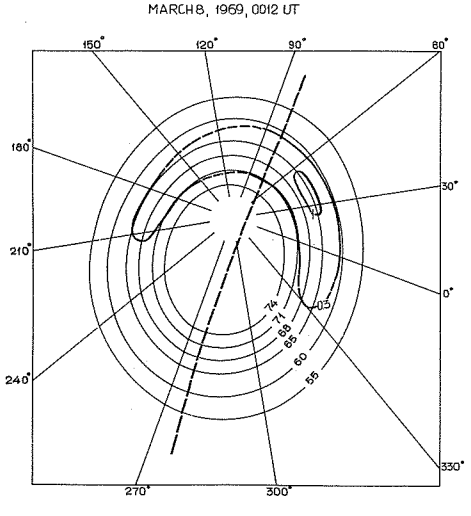
MARCH 8, 1969, 0012 UT
150°
120°
90°
60°
180°
30°
210°
0°
240°
330°
270°
300°
74
71
68
65
60
55

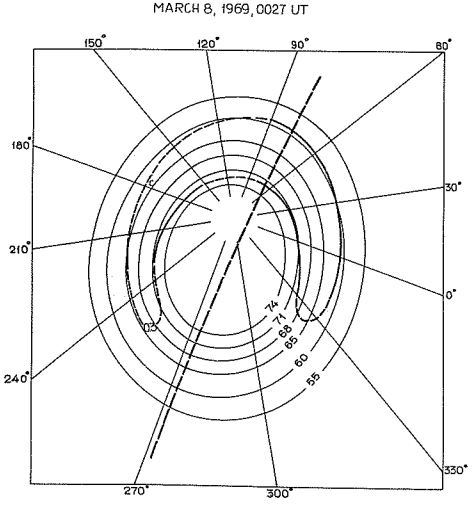
MARCH 8, 1969, 0027 UT
150°
120°
90°
60°
180°
30°
210°
0°
240°
330°
270°
300°
74
71
68
65
60
55

MARCH 8, 1969, 0042 UT

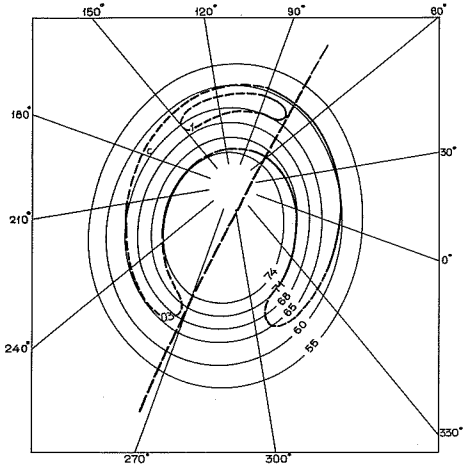

MARCH 8, 1969, 0057 UT

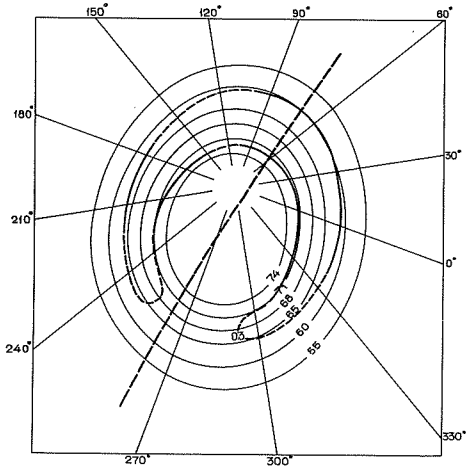

MARCH 8, 1969, 0112 UT

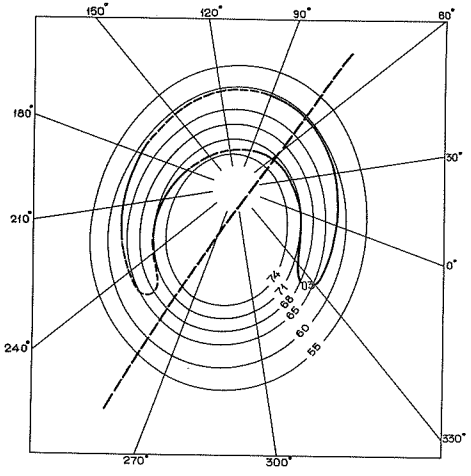

MARCH 8, 1969, 0127 UT

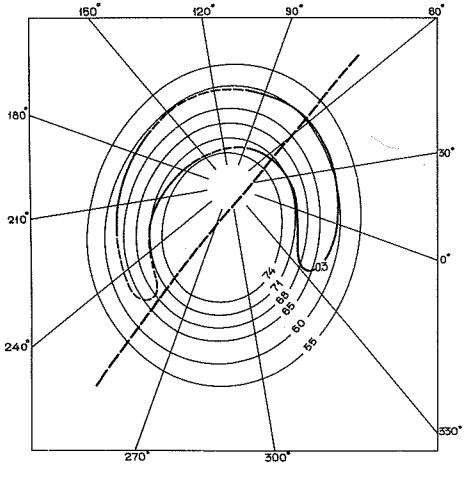

MARCH 8, 1969, 0142 UT

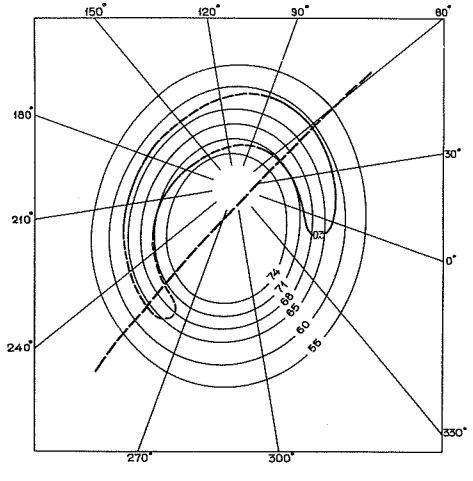

MARCH 8, 1969, 0157 UT

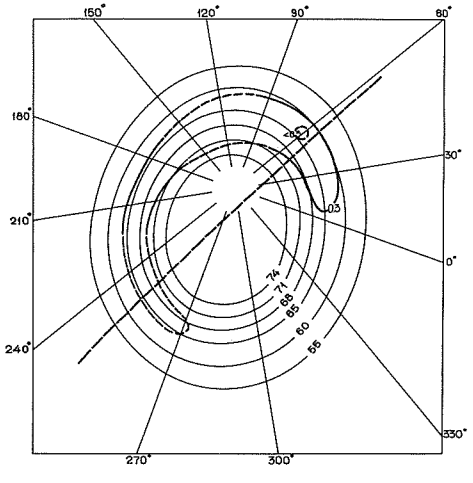

MARCH 13, 1969, 0115 UT

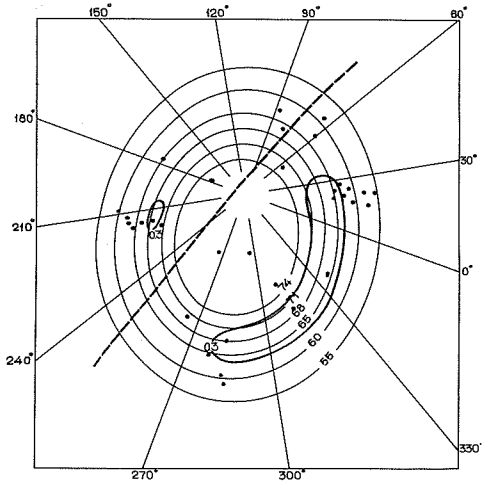

MARCH 13, 1969, 0130 UT

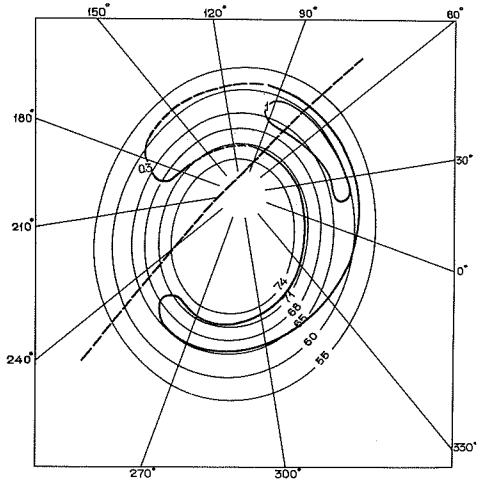

MARCH 13, 1969, 0145 UT

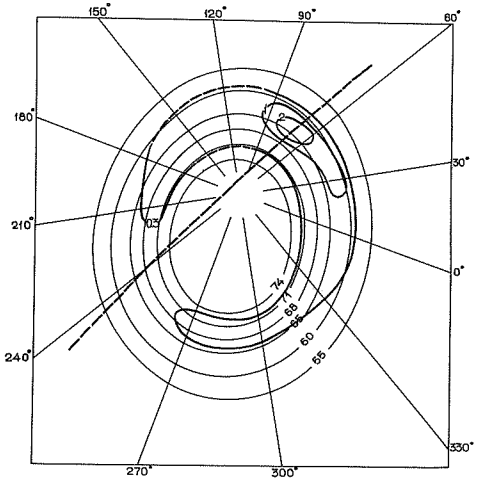

MARCH 13, 1969, 0200 UT

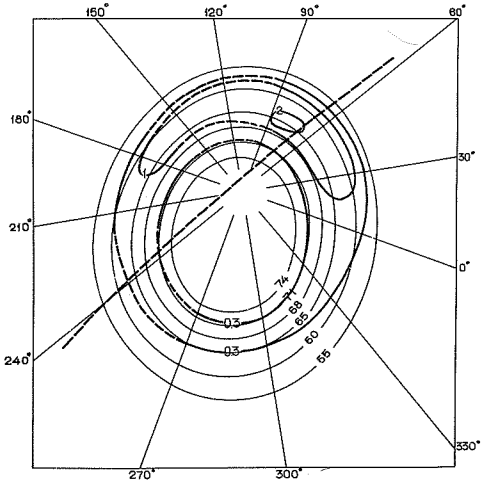

MARCH 13, 1969, 0215 UT

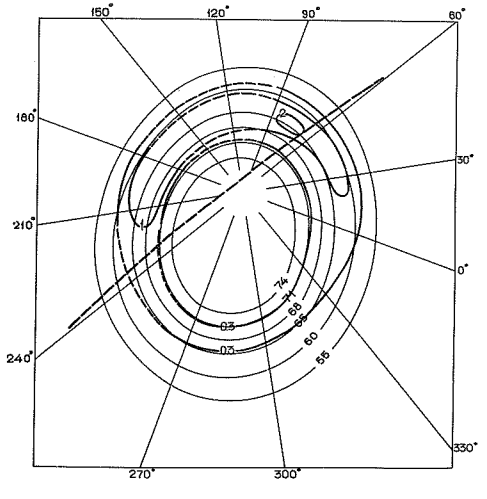

MARCH 13, 1969, 0230 UT

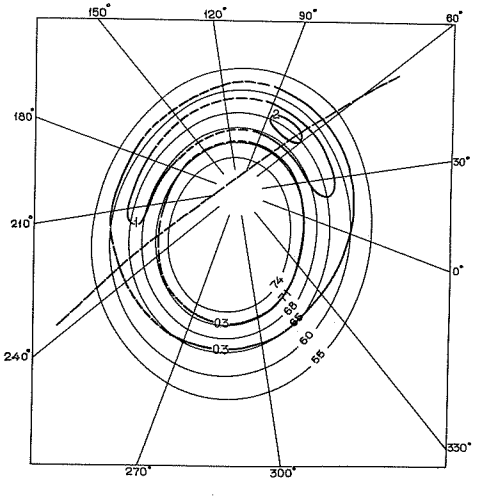

MARCH 13, 1969, 0245 UT

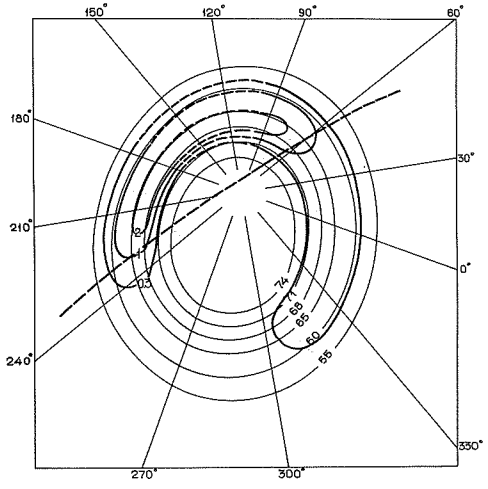

MARCH 13, 1969, 0300 UT

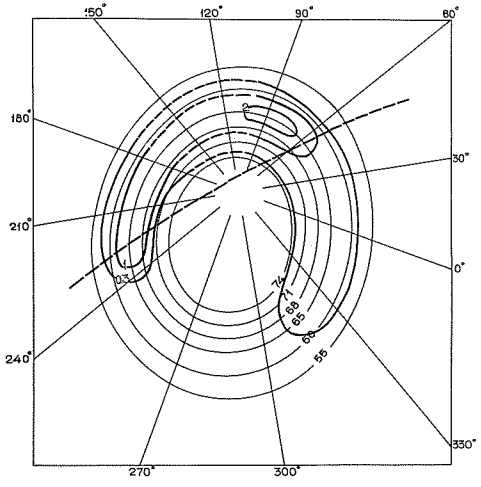

MARCH 13, 1969, 0315 UT

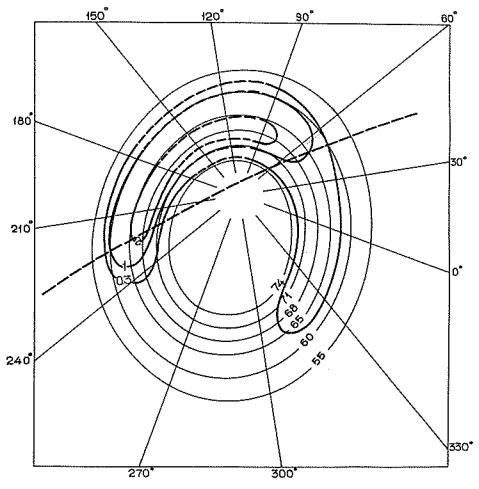

MARCH 13, 1969, 0330 UT

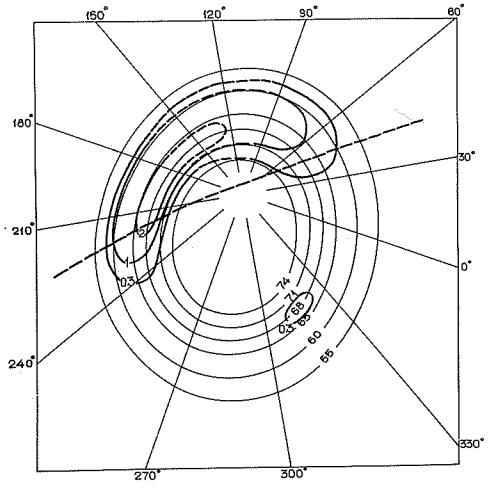

MARCH 13, 1969, 0345 UT

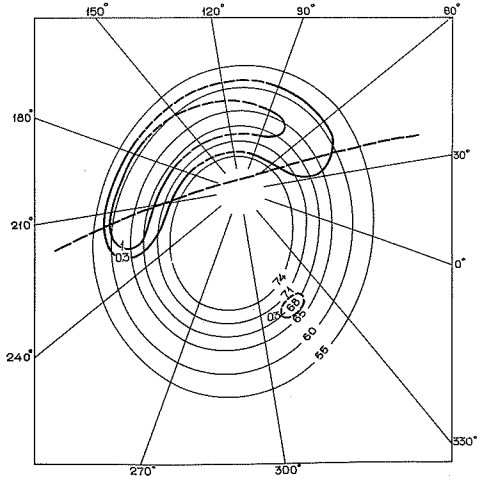

MARCH 13, 1969, 0400 UT

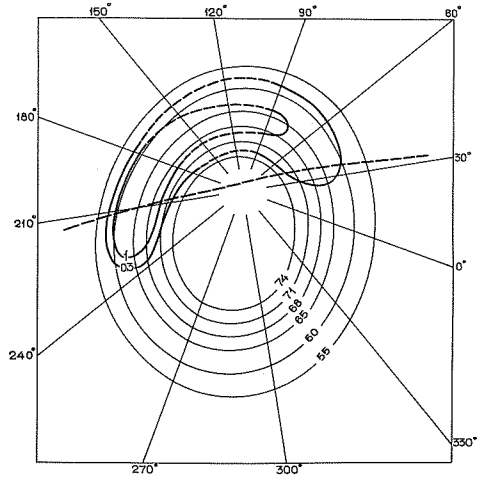

MARCH 18, 1969, 0330 UT

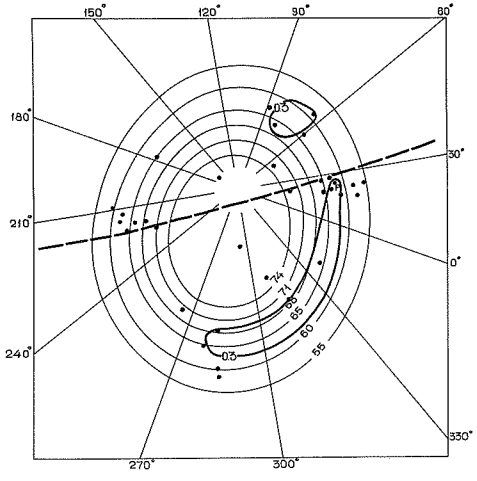

MARCH 18, 1969, 0345 UT

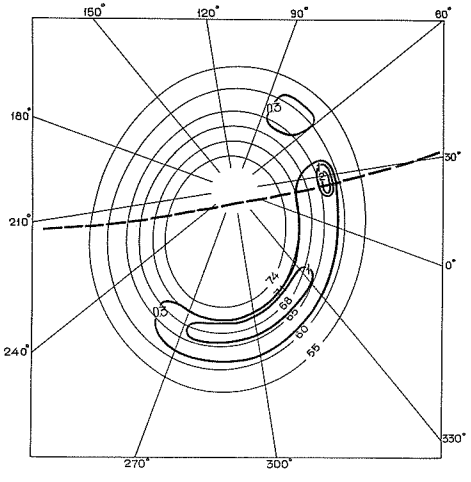

MARCH 18, 1969, 0400 UT

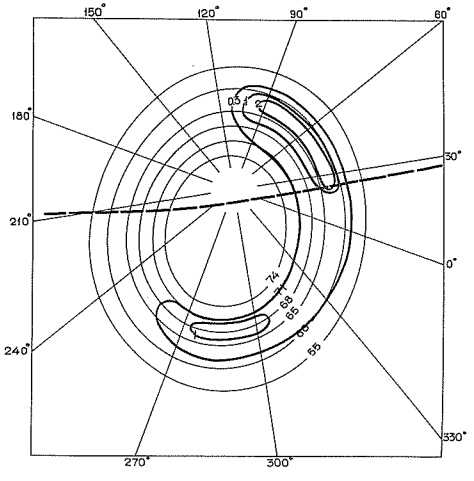

MARCH 18, 1969, 0415 UT

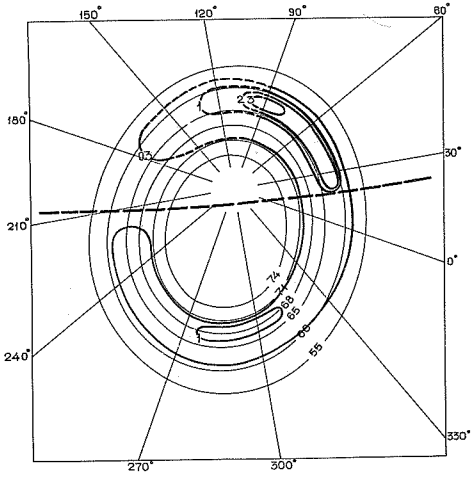

MARCH 18, 1969, 0430 UT

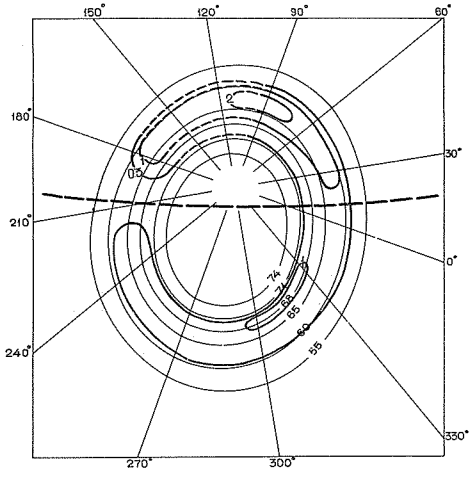

MARCH 18, 1969, 0445 UT

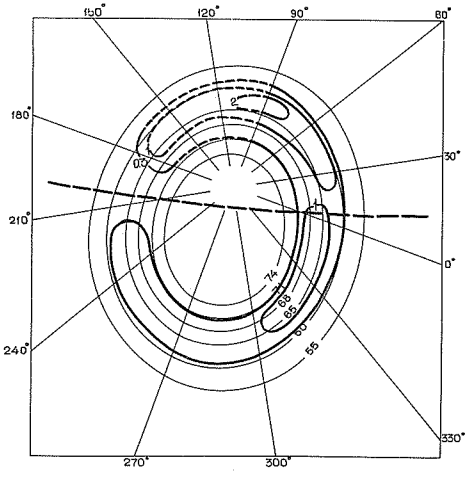

MARCH 18, 1969, 0500 UT

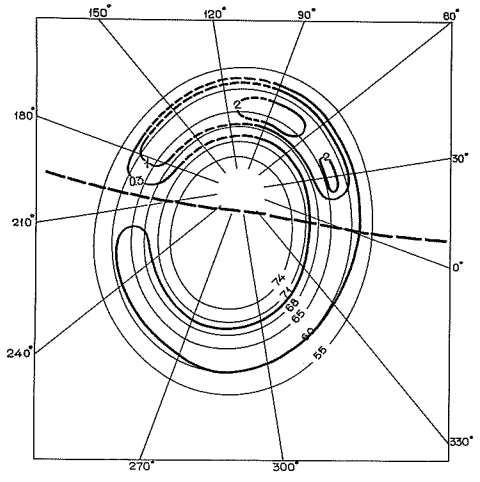

MARCH 18, 1969, 0515 UT

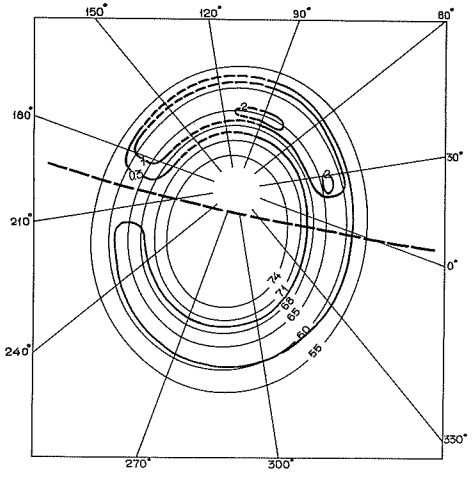

MARCH 18, 1969, 0530 UT

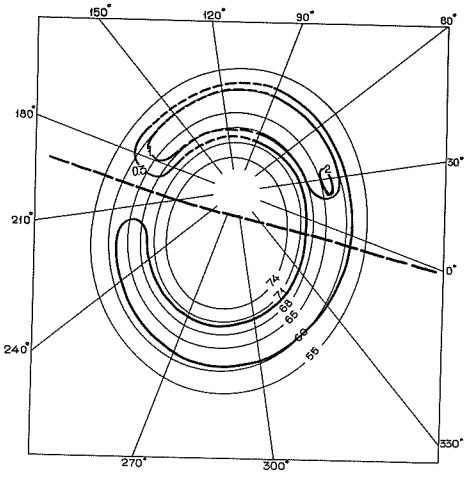

MARCH 18, 1969, 0545 UT

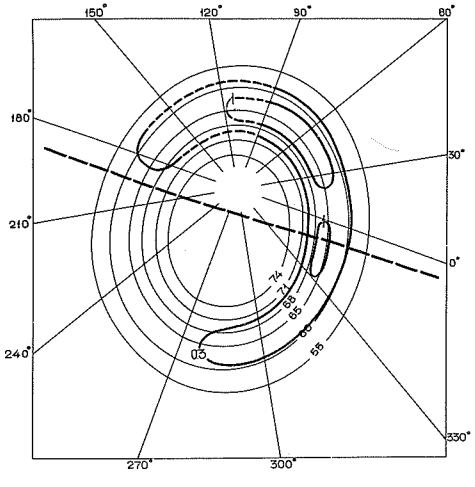

MARCH 18, 1969, 0600 UT

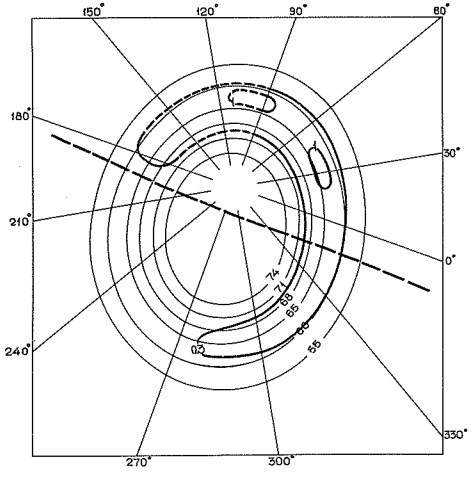

MARCH 18, 1969, 0615 UT

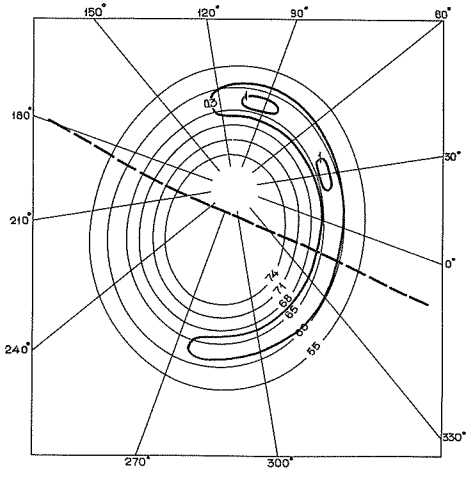

CONTOUR PLOT OF AURORAL ABSORPTION
MARCH 30, 1969 1740 UT

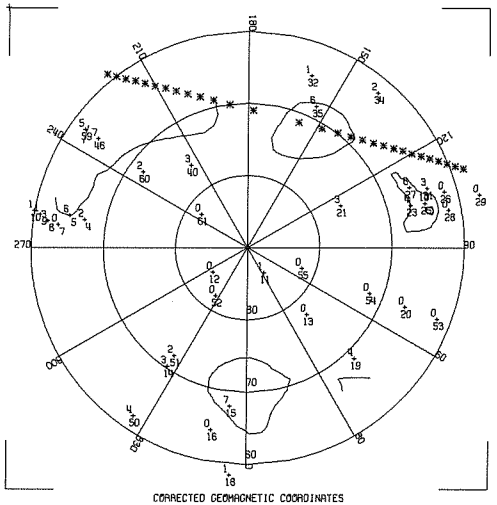

CORRECTED GEOMAGNETIC COORDINATES
CONTOUR INTERVAL = 0.50 DB

CONTOUR PLOT OF AURORAL ABSORPTION
MARCH 30, 1969 1750 UT

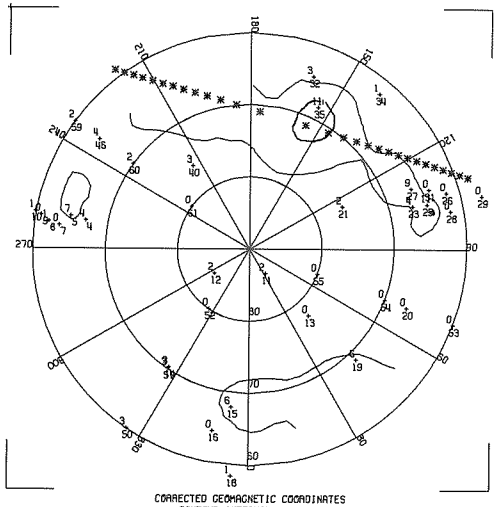

CORRECTED GEOMAGNETIC COORDINATES
CONTOUR INTERVAL = 0.5 DB

CONTOUR PLOT OF AURORAL ABSORPTION
MARCH 30, 1969 1755 UT

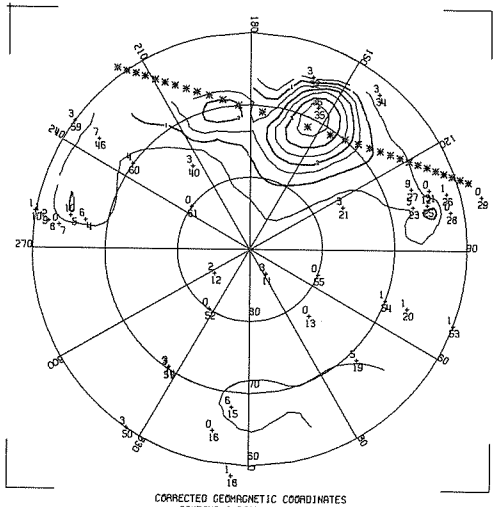

CORRECTED GEOMAGNETIC COORDINATES
CONTOUR INTERVAL = 0.5 DB

CONTOUR PLOT OF AURORAL ABSORPTION
MARCH 30, 1969 1810 UT

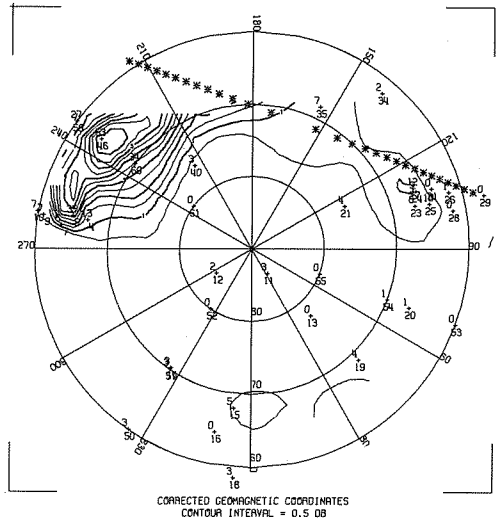

CORRECTED GEOMAGNETIC COORDINATES
CONTOUR INTERVAL = 0.5 DB

CONTOUR PLOT OF AURORAL ABSORPTION
MARCH 30, 1969 1820 UT

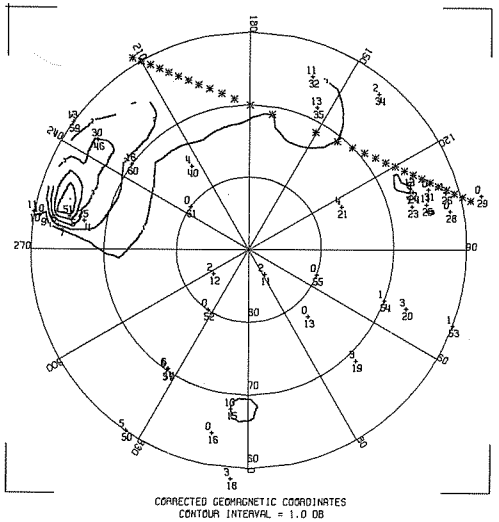

CORRECTED GEOMAGNETIC COORDINATES
CONTOUR INTERVAL = 1.0 DB

CONTOUR PLOT OF AURORAL ABSORPTION
MARCH 30, 1969 1830 UT

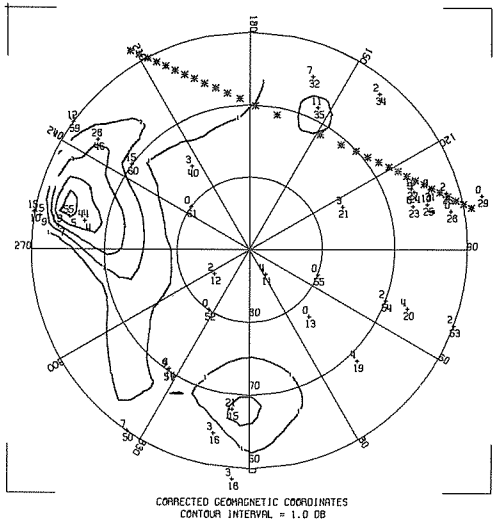

CORRECTED GEOMAGNETIC COORDINATES
CONTOUR INTERVAL = 1.0 DB

CONTOUR PLOT OF AURORAL ABSORPTION
MARCH 30, 1969 1845 UT

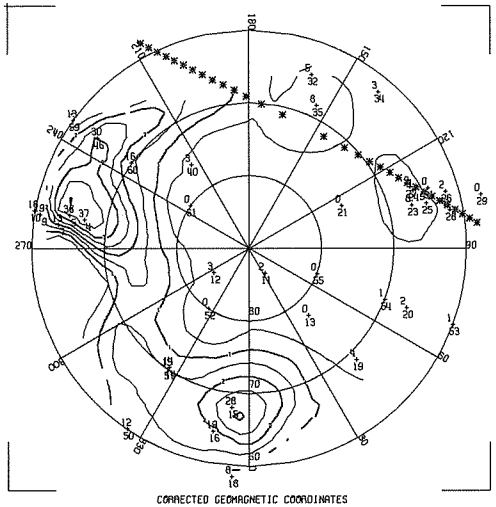

CORRECTED GEOMAGNETIC COORDINATES
CONTOUR INTERVAL = 0.5 DB

CONTOUR PLOT OF AURORAL ABSORPTION
MARCH 30, 1969 1855 UT

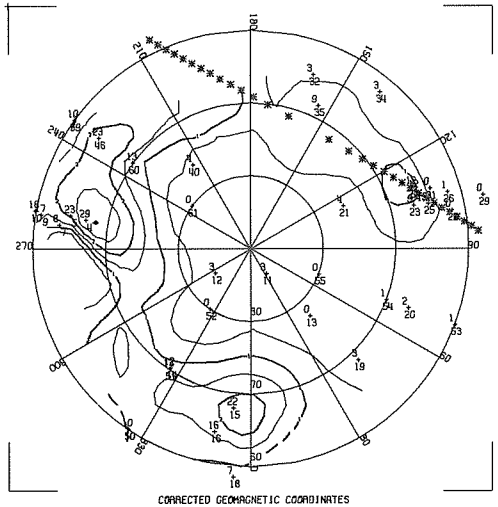

CORRECTED GEOMAGNETIC COORDINATES
CONTOUR INTERVAL = 0.5 DB

CONTOUR PLOT OF AURORAL ABSORPTION
MARCH 31, 1969 1640 UT

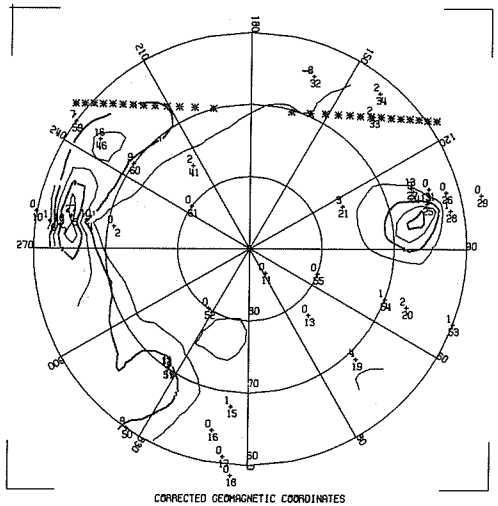

CORRECTED GEOMAGNETIC COORDINATES
CONTOUR INTERVAL = 0.5 DB

CONTOUR PLOT OF AURORAL ABSORPTION
MARCH 31, 1969 1730 UT

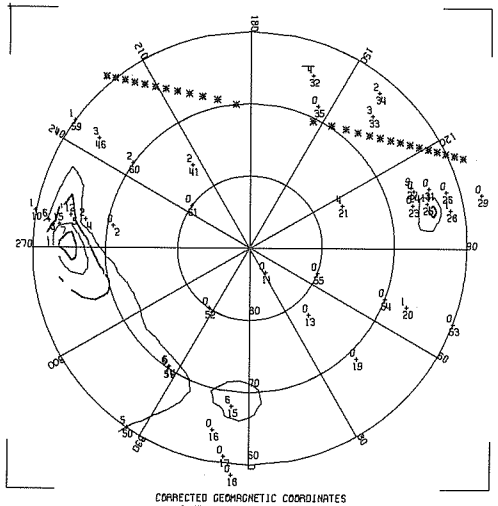

CORRECTED GEOMAGNETIC COORDINATES
CONTOUR INTERVAL = 0.5 DB

CONTOUR PLOT OF AURORAL ABSORPTION
MARCH 31, 1969 1740 UT

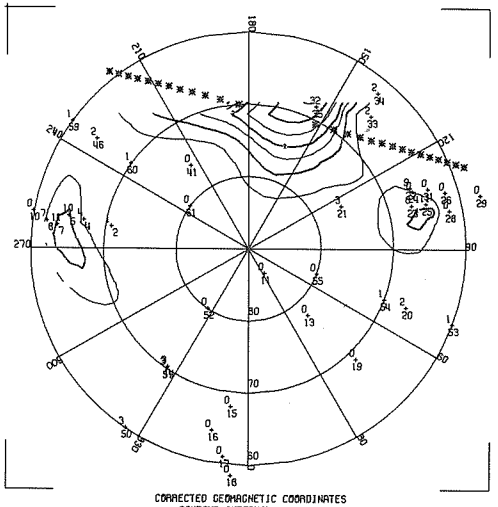

CORRECTED GEOMAGNETIC COORDINATES
CONTOUR INTERVAL = 0.5 DB

CONTOUR PLOT OF AURORAL ABSORPTION
MARCH 31, 1969 1750 UT

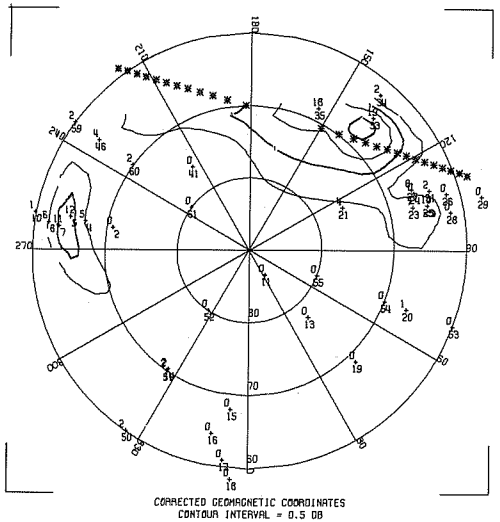

CORRECTED GEOMAGNETIC COORDINATES
CONTOUR INTERVAL = 0.5 DB

CONTOUR PLOT OF AURORAL ABSORPTION
MARCH 31, 1969 1800 UT

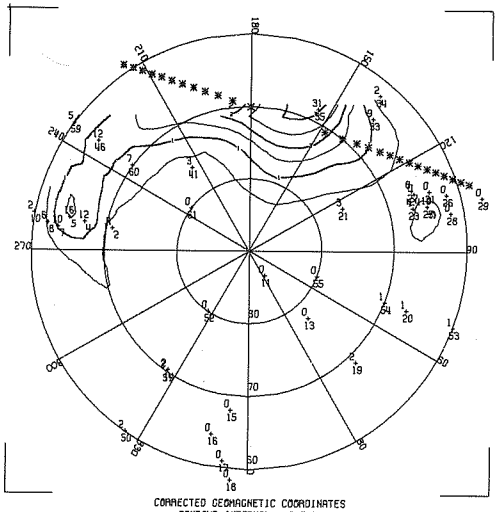

CORRECTED GEOMAGNETIC COORDINATES
CONTOUR INTERVAL = 0.5 DB

CONTOUR PLOT OF AURORAL ABSORPTION
MARCH 31, 1969 1815 UT

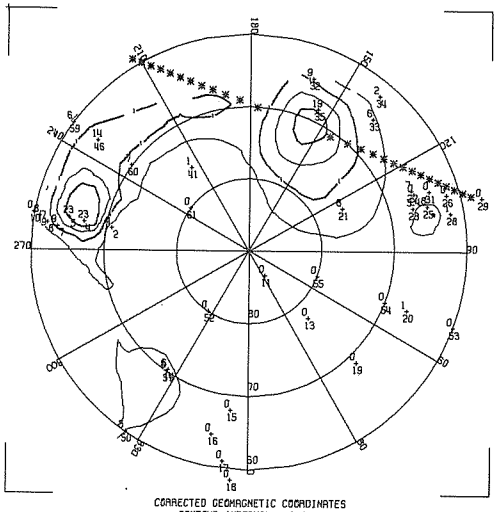

CORRECTED GEOMAGNETIC COORDINATES
CONTOUR INTERVAL = 0.5 DB

CONTOUR PLOT OF AURORAL ABSORPTION
MARCH 31, 1969 1830 UT

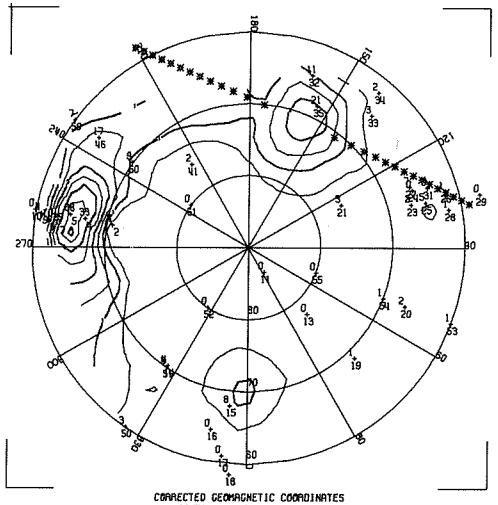

CORRECTED GEOMAGNETIC COORDINATES
CONTOUR INTERVAL = 0.5 DB

CONTOUR PLOT OF AURORAL ABSORPTION
MARCH 31, 1969 1845 UT

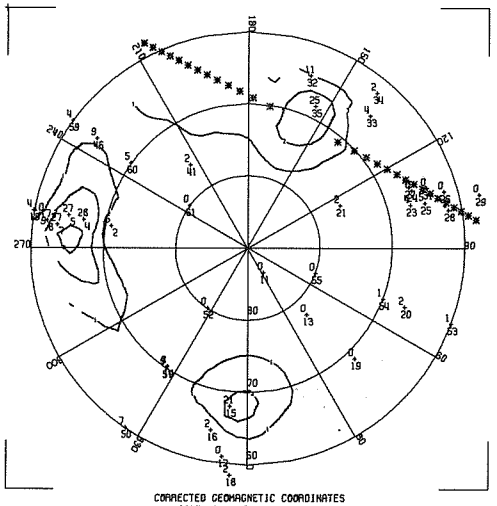

CORRECTED GEOMAGNETIC COORDINATES
CONTOUR INTERVAL = 1.0 DB

CONTOUR PLOT OF AURORAL ABSORPTION
MARCH 31, 1969 1900 UT

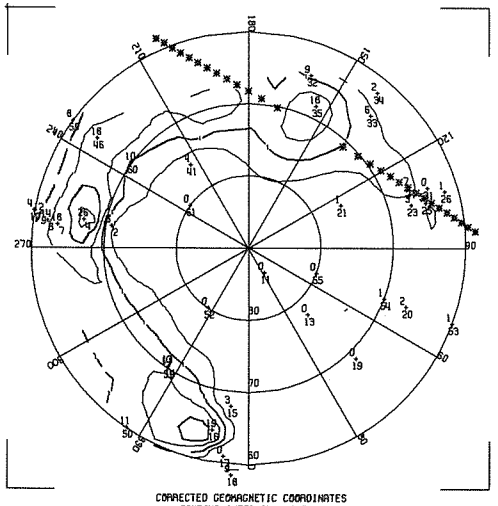

CORRECTED GEOMAGNETIC COORDINATES
CONTOUR INTERVAL = 0.5 DB

CONTOUR PLOT OF AURORAL ABSORPTION
MARCH 31, 1969 1920 UT

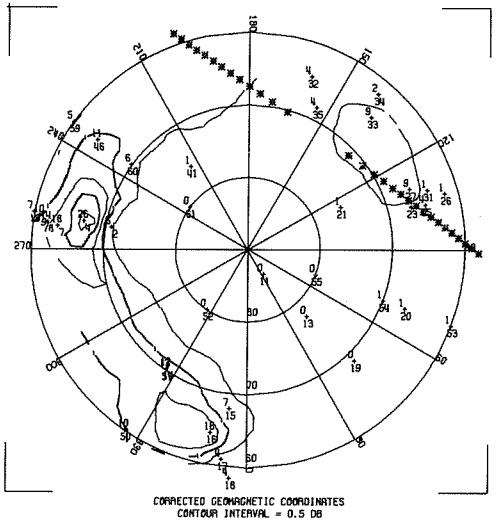

CORRECTED GEOMAGNETIC COORDINATES
CONTOUR INTERVAL = 0.5 DB

CONTOUR PLOT OF AURORAL ABSORPTION
MARCH 31, 1969 1940 UT

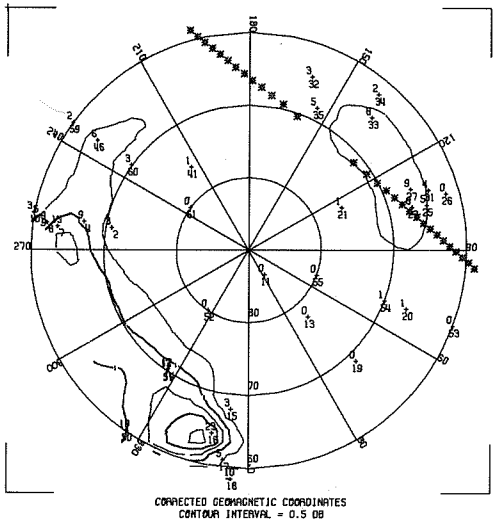

CORRECTED GEOMAGNETIC COORDINATES
CONTOUR INTERVAL = 0.5 DB

CONTOUR PLOT OF AURORAL ABSORPTION
MARCH 31, 1969 1955 UT

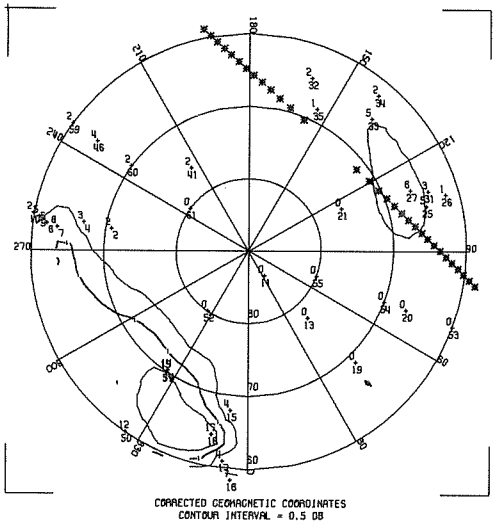

CORRECTED GEOMAGNETIC COORDINATES
CONTOUR INTERVAL = 0.5 DB

April 1, 1969, 1830 UT

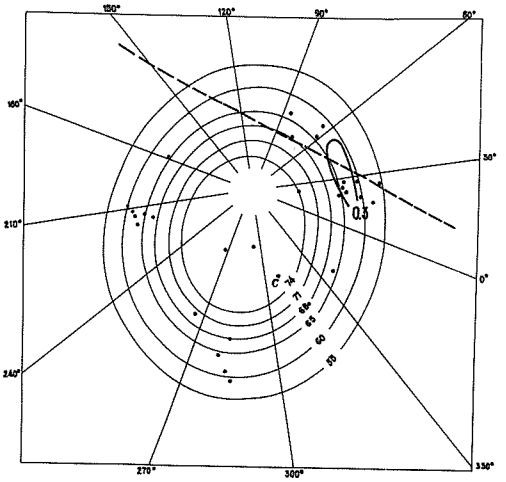

April 1, 1969, 1845 UT

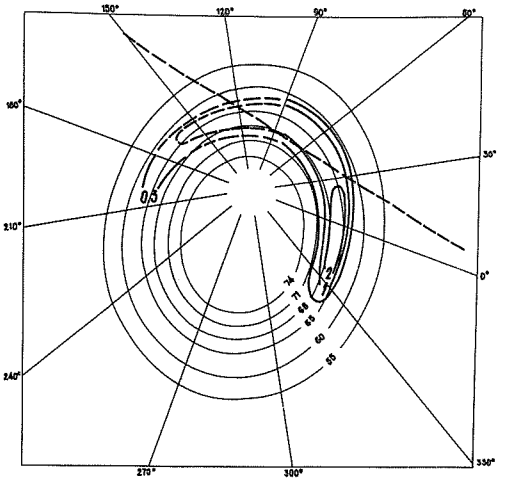

April 1, 1969, 1900 UT

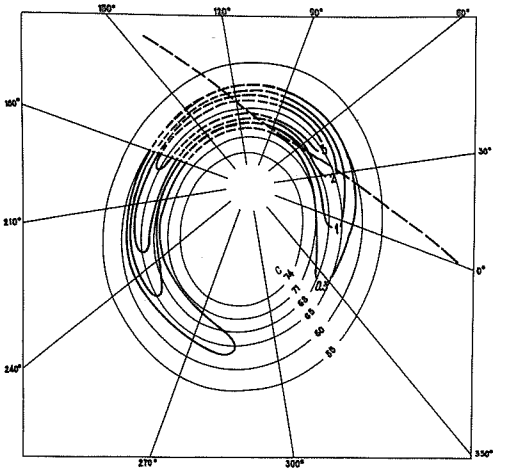

April 1, 1969, 1915 UT

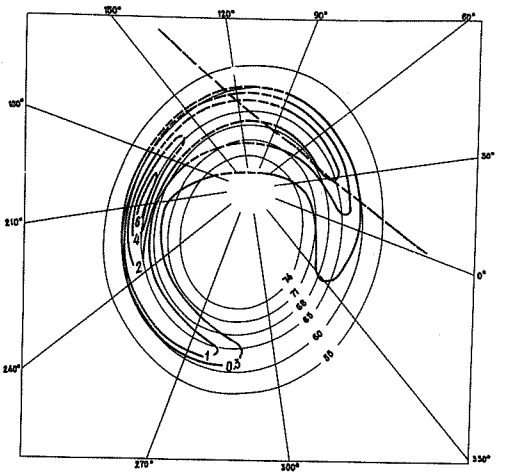

April 1, 1969, 1930 UT

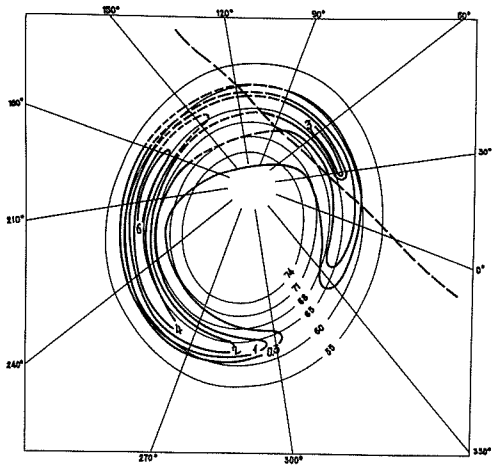

April 1, 1969, 1945 UT

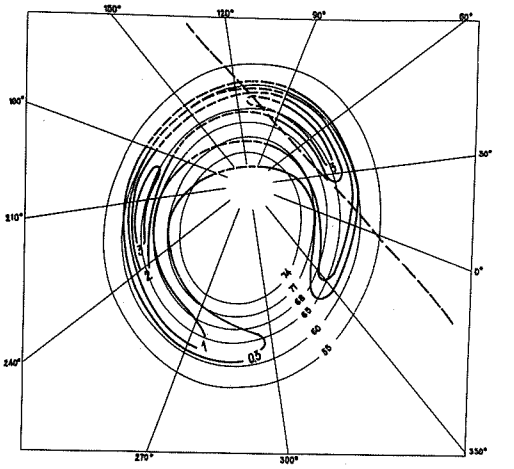

April 1, 1969, 2000 UT

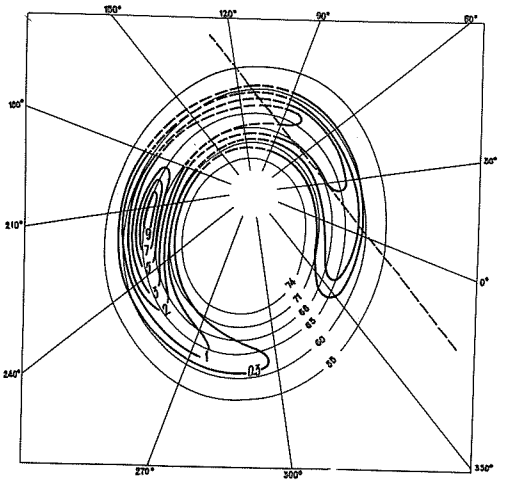

April 1, 1969, 2015 UT

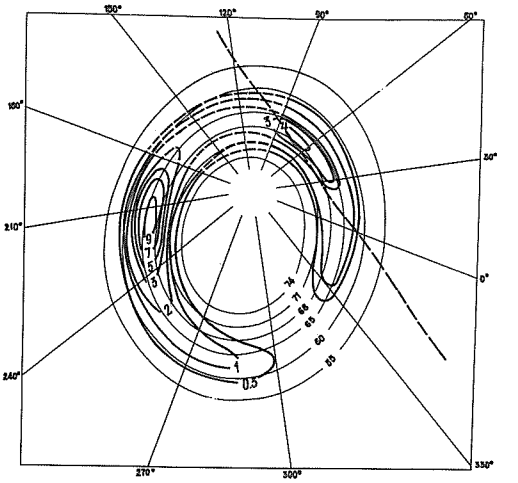

April 1, 1969, 2030 UT

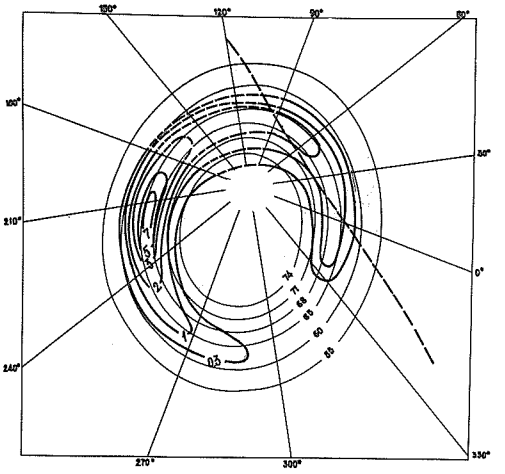

April 1, 1969, 2045 UT

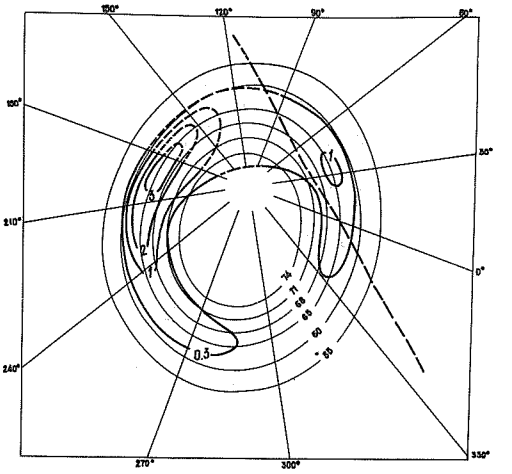

April 1, 1969, 2100 UT

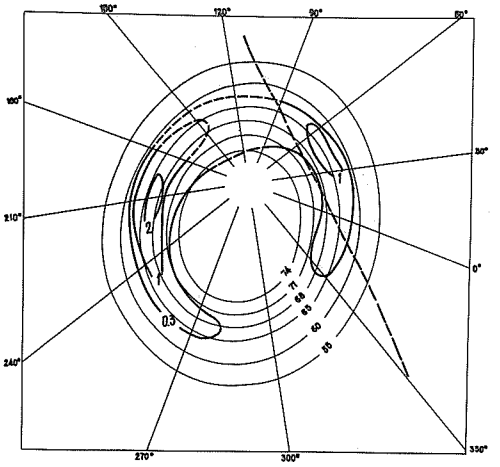

April 1, 1969, 2115 UT

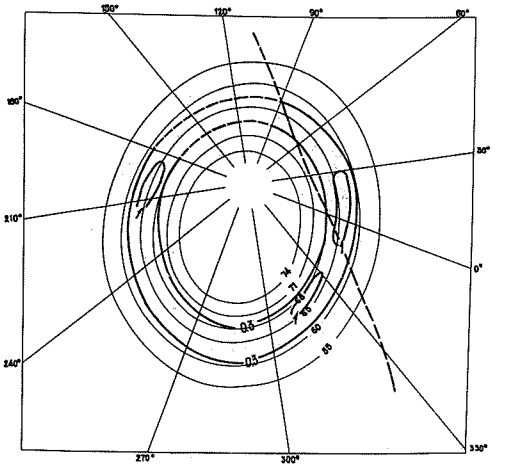

APRIL 21, 1969, 2247 UT

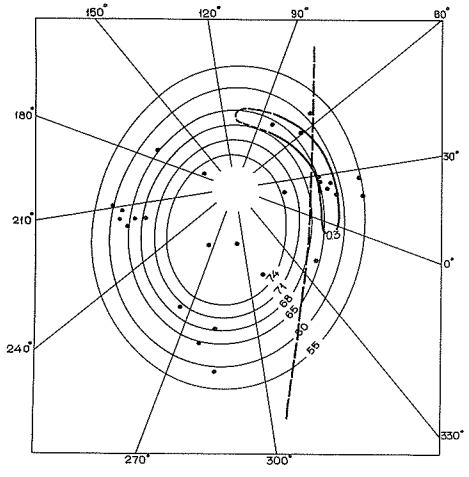

APRIL 21, 1969, 2257 UT

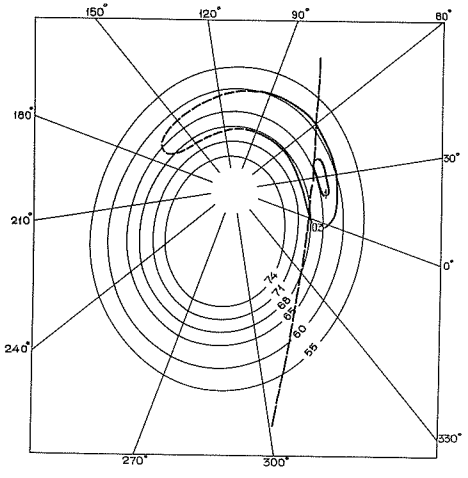

APRIL 21, 1969, 2302 UT

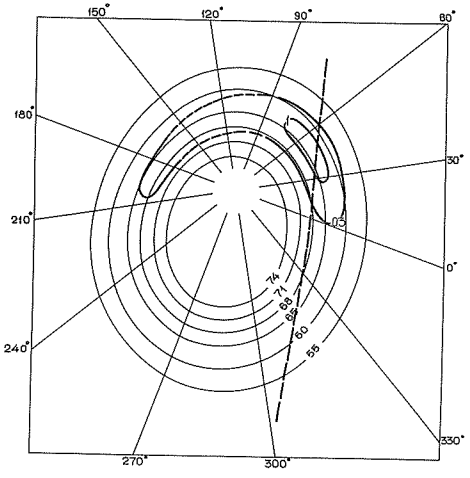

APRIL 21, 1969, 2317 UT

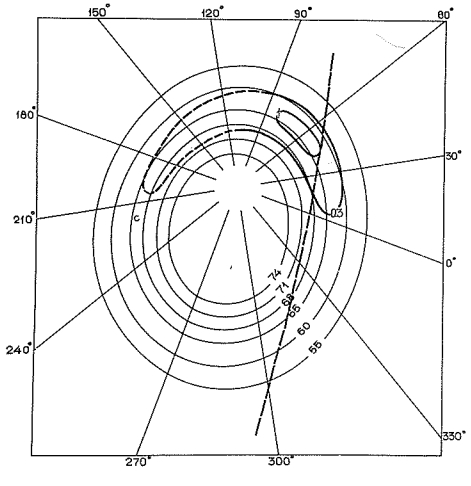

APRIL 21, 1969, 2332 UT

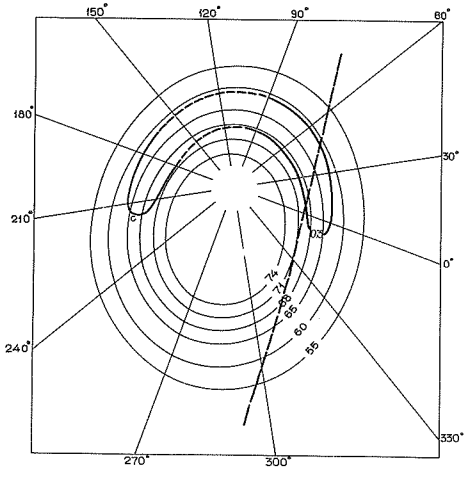

APRIL 21, 1969, 2347 UT

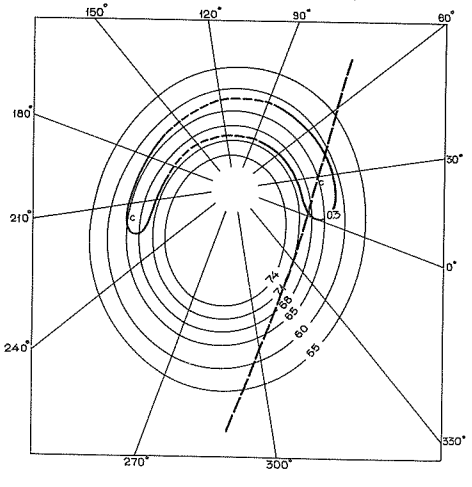

APRIL 22, 1969, 0002 UT

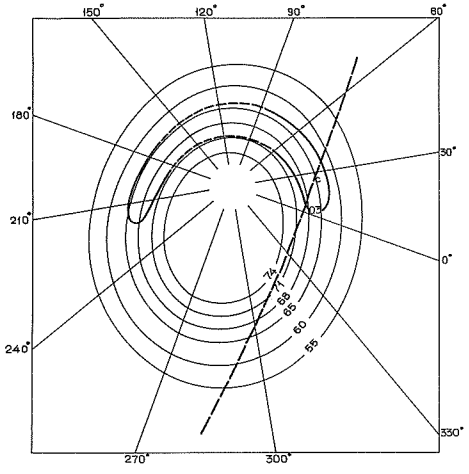

APRIL 22, 1969, 0017 UT

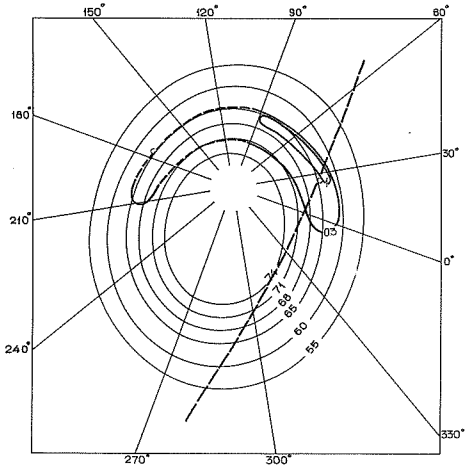

APRIL 22, 1969, 0032 UT

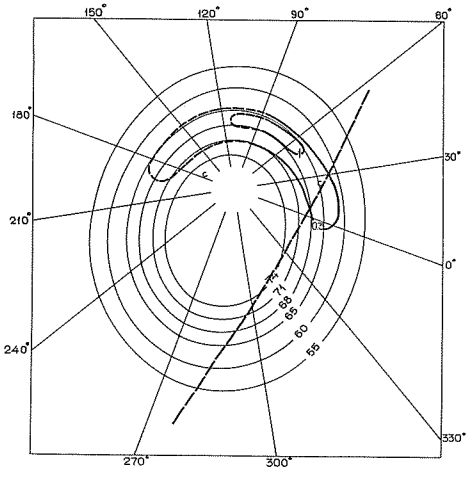

APRIL 22, 1969, 0047 UT

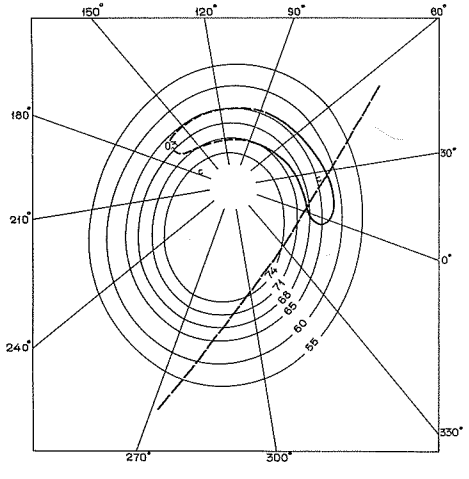

APRIL 22, 1969, 0102 UT

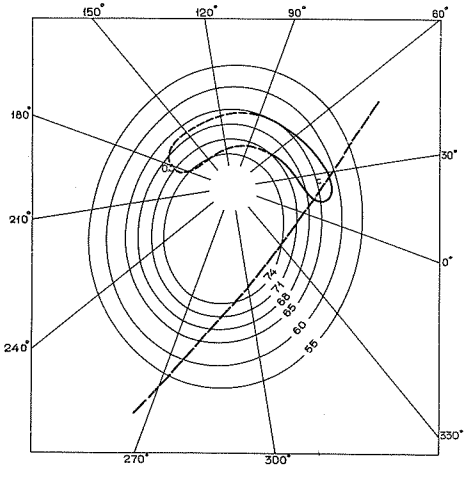

APRIL 22, 1969, 0132 UT

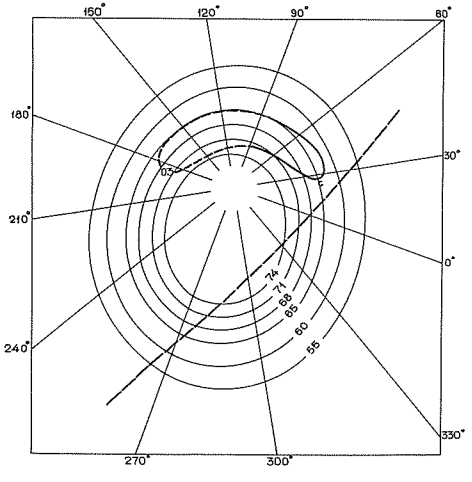

MAY 3, 1969, 0430 UT

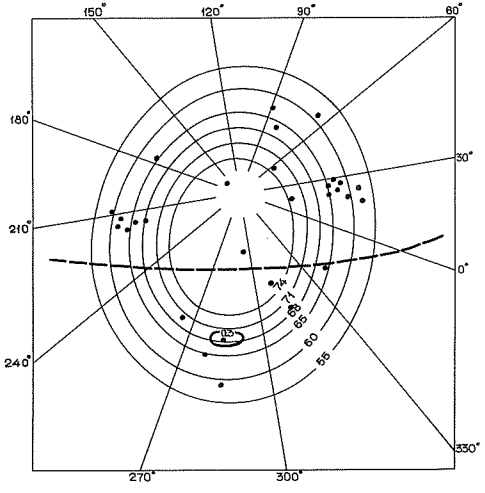

MAY 3, 1969, 0445 UT

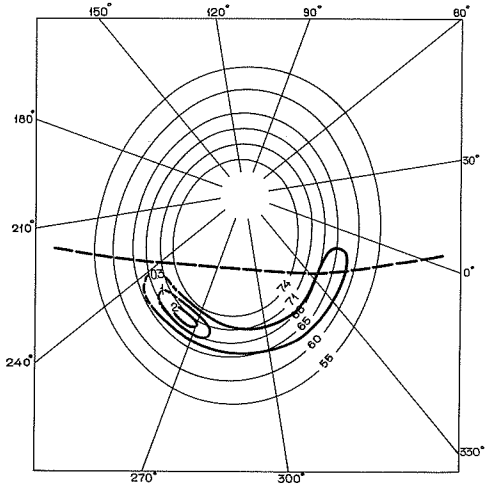

MAY 3, 1969, 0500 UT

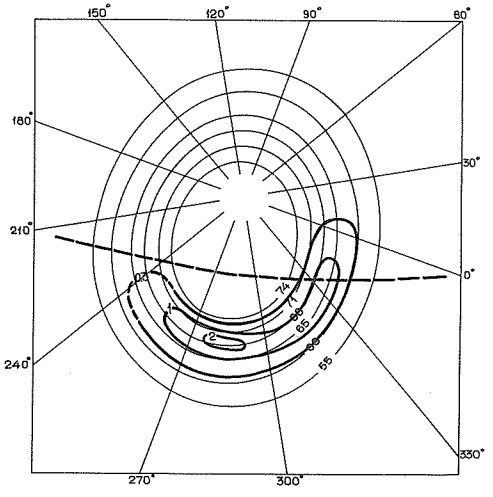

MAY 3, 1969, 0515 UT

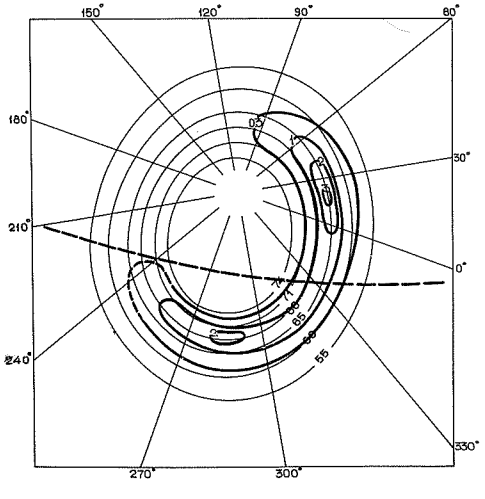

MAY 3, 1969, 0530 UT

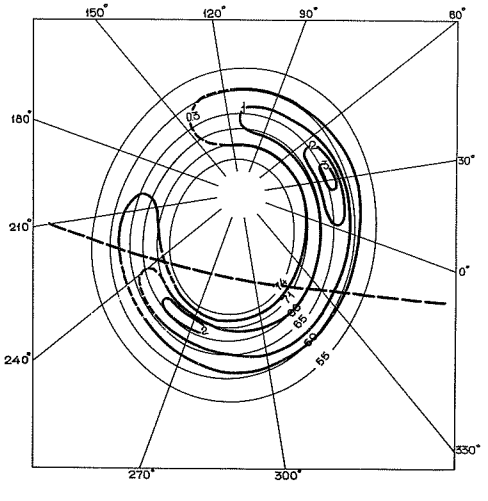

MAY 3, 1969, 0545 UT

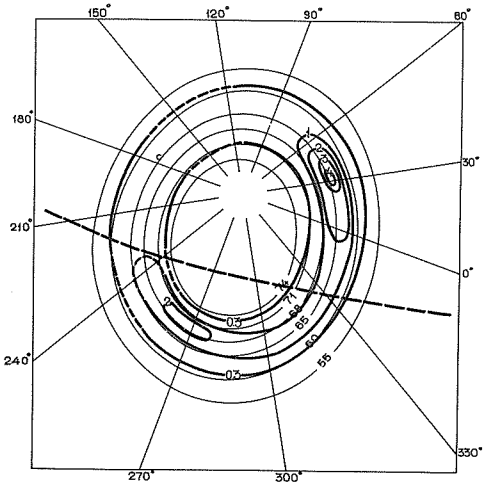

MAY 3, 1969, 0600 UT

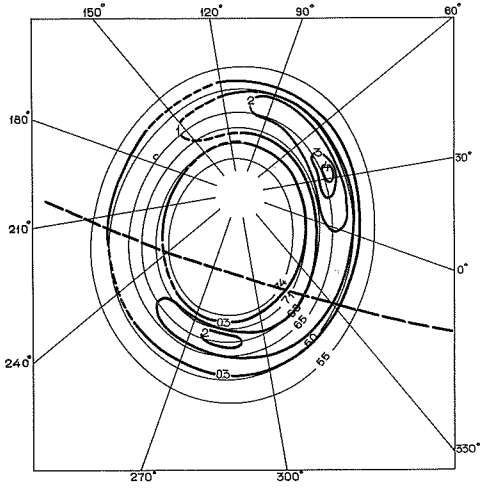

MAY 3, 1969, 0615 UT

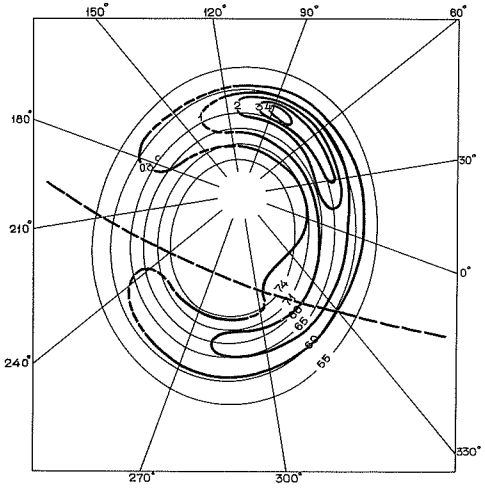

MAY 3, 1969, 0630 UT

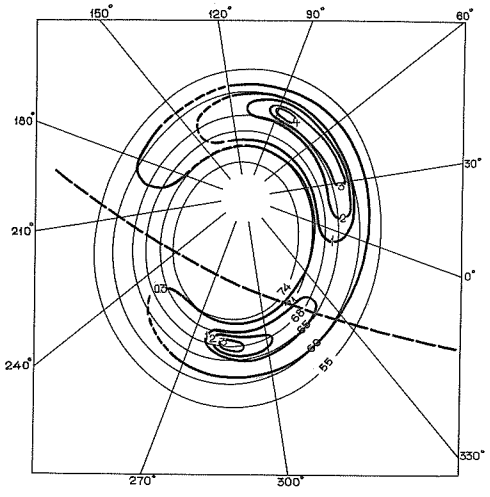

MAY 3, 1969, 0645 UT

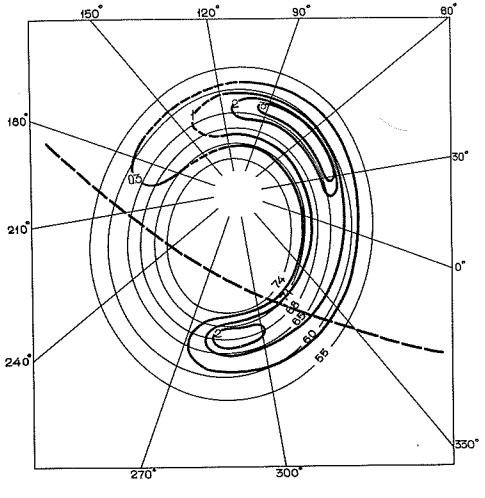

MAY 3, 1969, 0700 UT

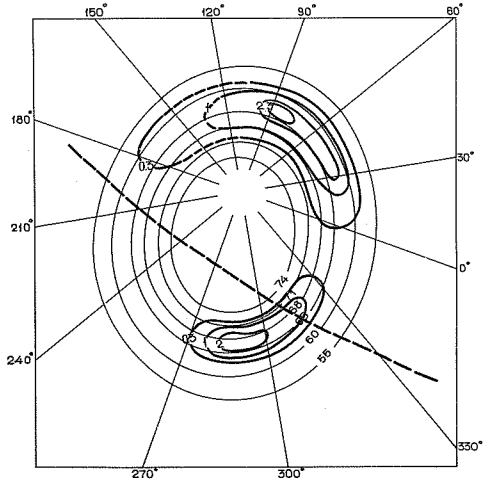

MAY 3, 1969, 0715 UT

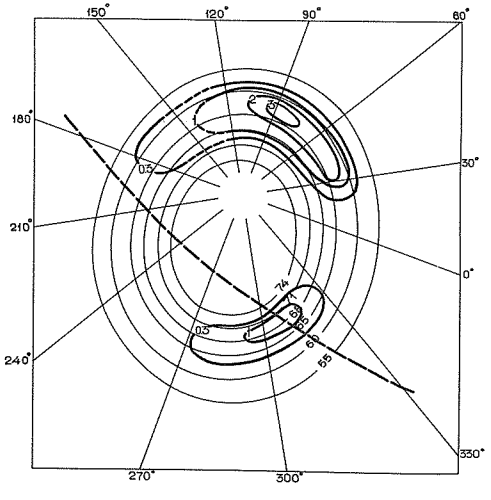

May 14, 1969, 1915 UT

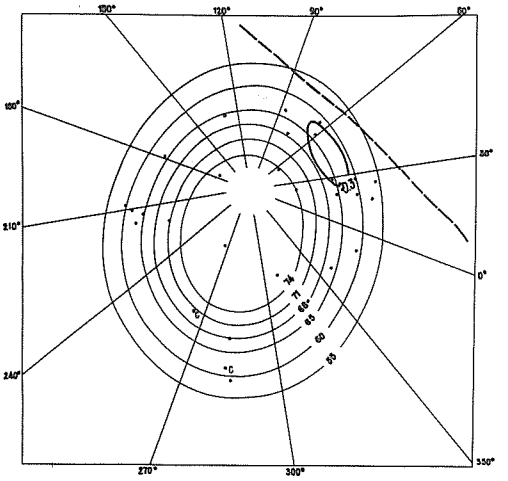

May 14, 1969, 1930 UT

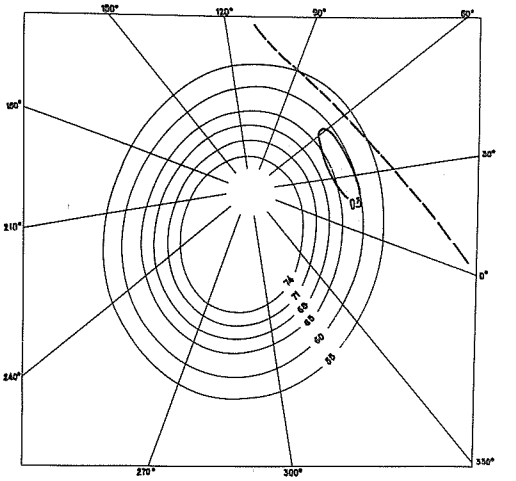

May 14, 1969, 1945 UT

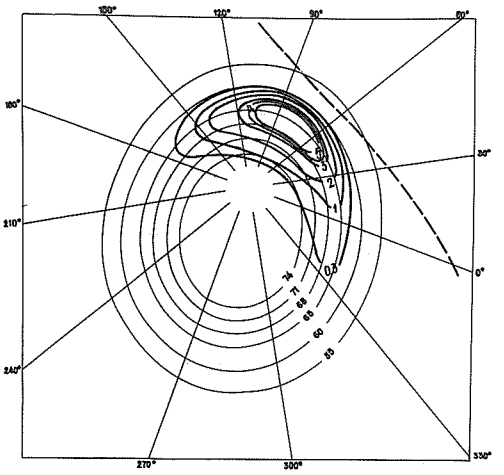

May 14, 1969, 2000 UT

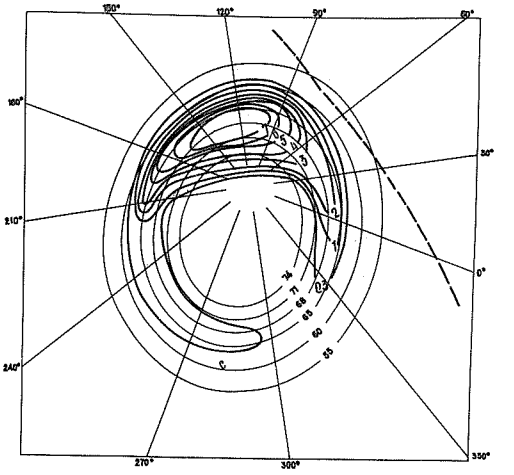

May 14, 1969, 2015 UT

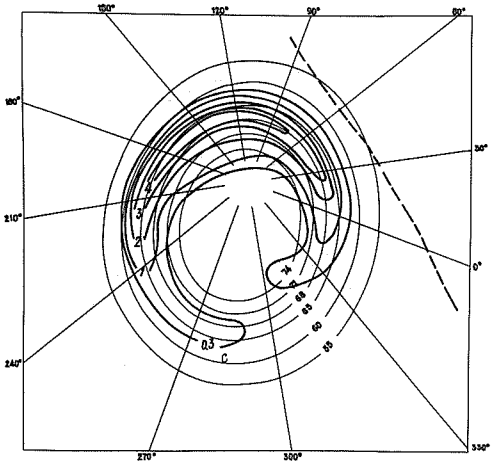

May 14, 1969, 2030 UT

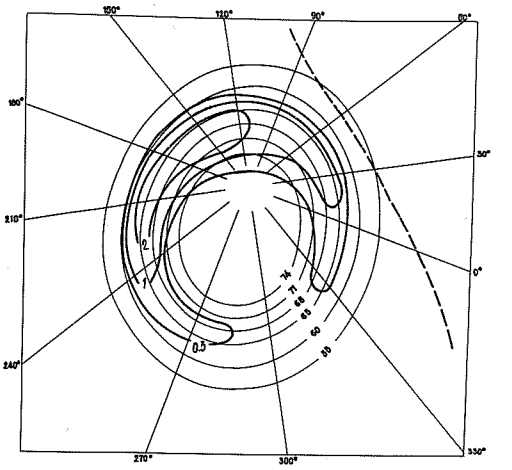

May 14, 1969, 2045 UT

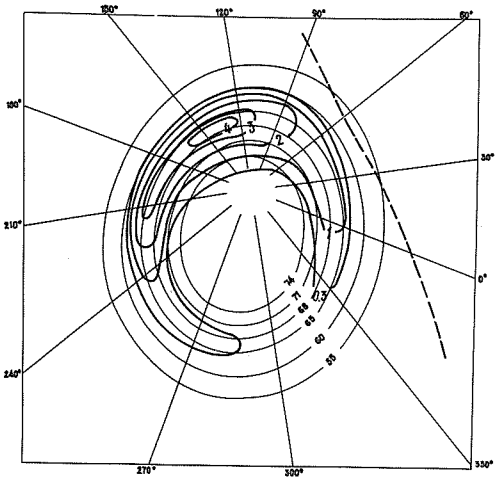

May 14, 1969, 2100 UT

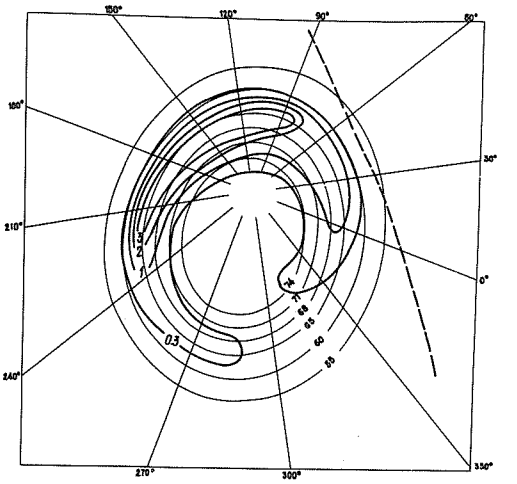

May 14, 1969, 2115 UT

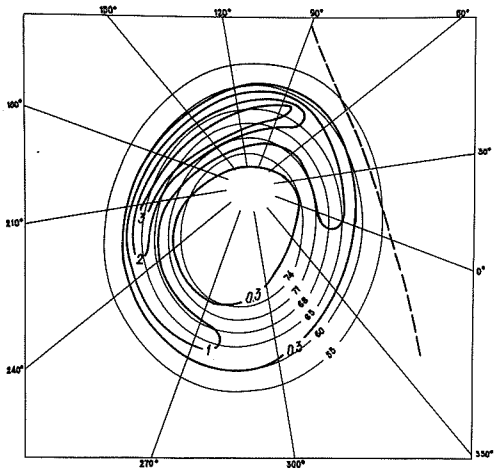

May 14, 1969, 2130 UT

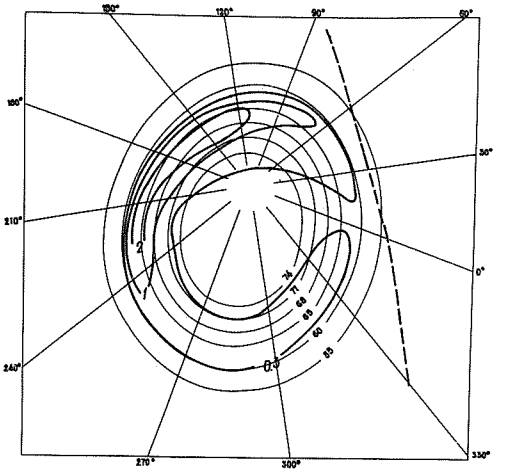

May 14, 1969, 2145 UT

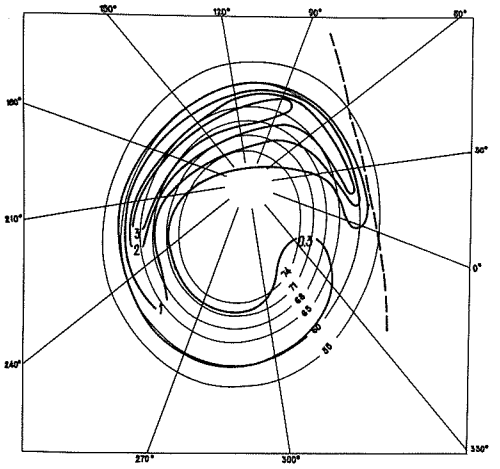

May 14, 1969, 2215 UT

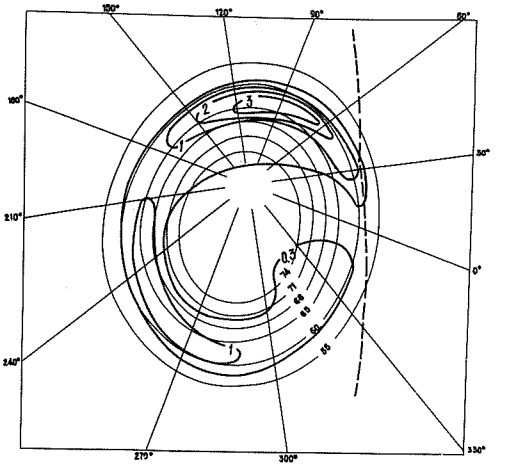

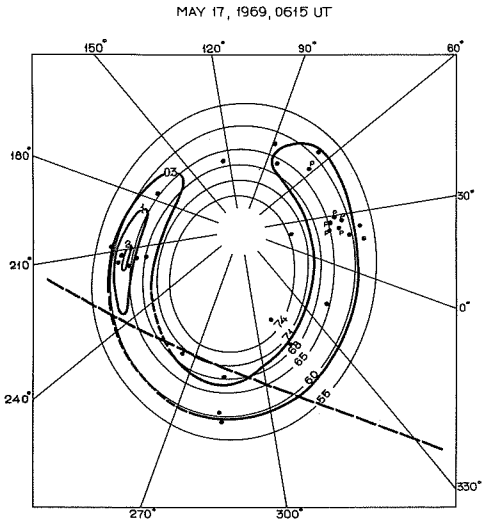
MAY 17, 1969, 0615 UT
150°
120°
90°
60°
180°
30°
210°
0°
240°
330°
270°
300°
03
74
71
68
65
60
55

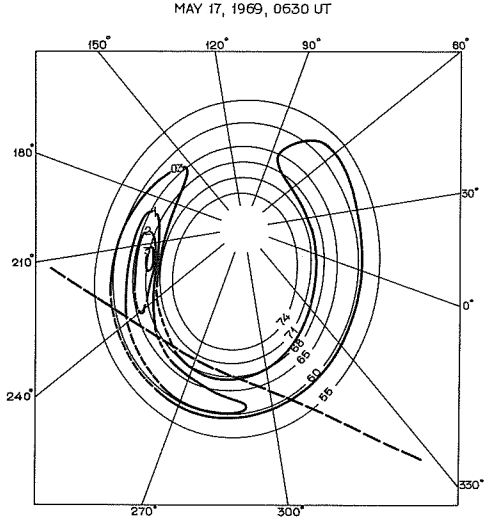
MAY 17, 1969, 0630 UT
150°
120°
90°
60°
180°
30°
210°
0°
240°
330°
270°
300°
03
74
71
68
65
60
55

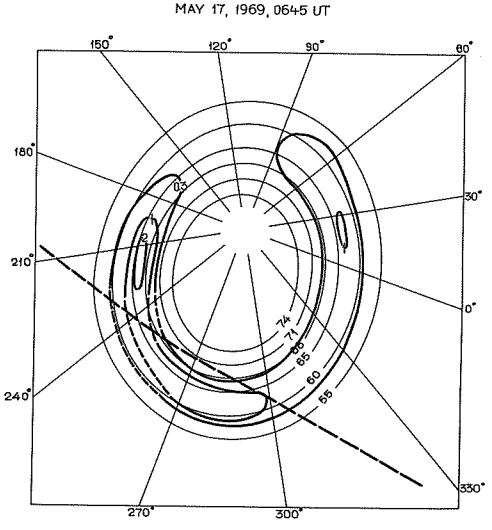
MAY 17, 1969, 0645 UT
150°
120°
90°
60°
180°
30°
210°
0°
240°
330°
270°
300°
03
74
71
68
65
60
55

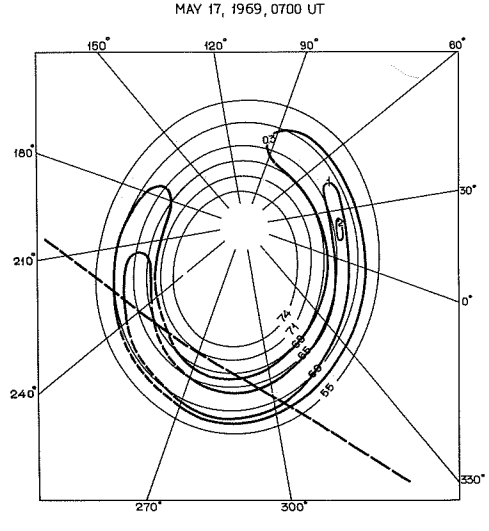
MAY 17, 1969, 0700 UT
150°
120°
90°
60°
180°
30°
210°
0°
240°
330°
270°
300°
03
74
71
68
65
60
55

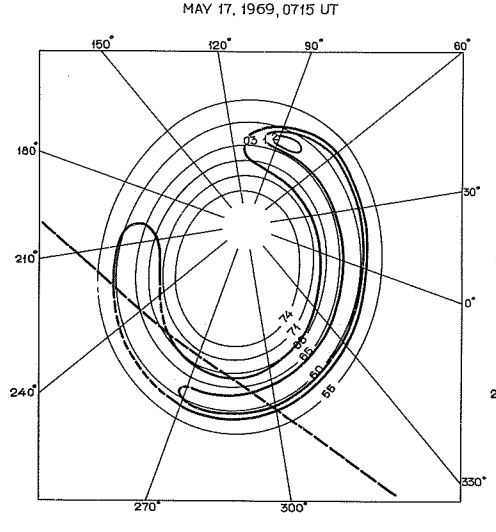
MAY 17, 1969, 0715 UT
150°
120°
90°
60°
180°
30°
210°
0°
240°
330°
270°
300°
03
74
71
68
65
60
55

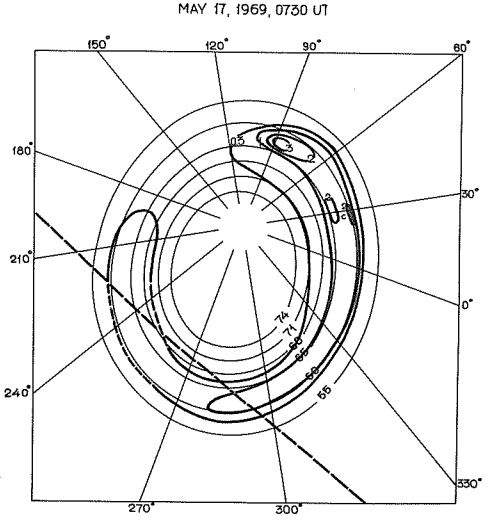
MAY 17, 1969, 0730 UT
150°
120°
90°
60°
180°
30°
210°
0°
240°
330°
270°
300°
03
74
71
68
65
60
55

MAY 17, 1969, 0745 UT

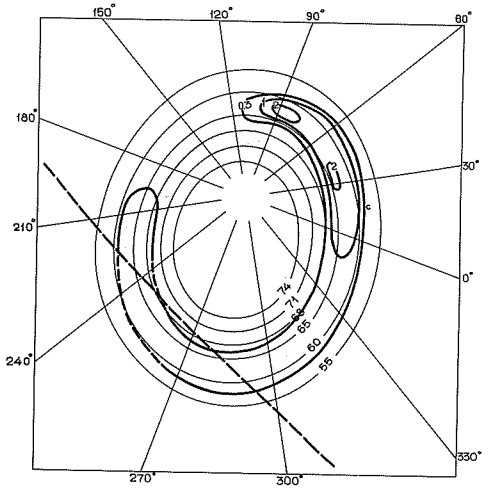

MAY 17, 1969, 0800 UT

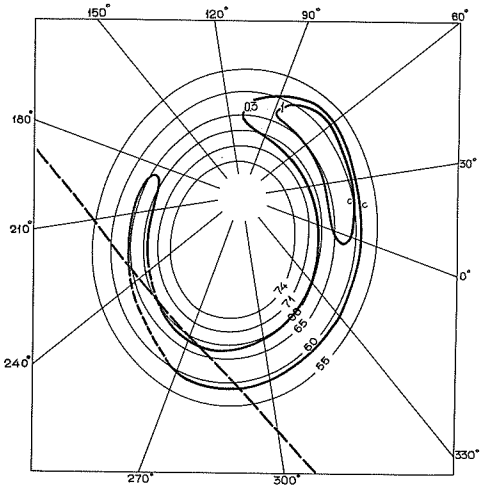

MAY 17, 1969, 0815 UT

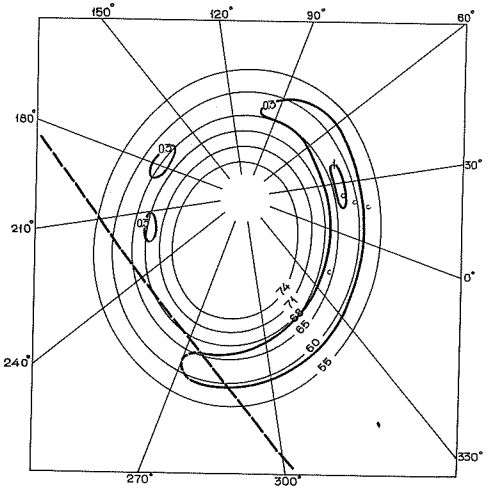

MAY 17, 1969, 0830 UT

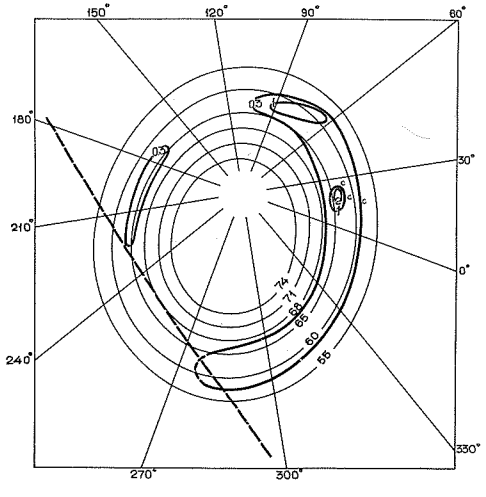

MAY 17, 1969, 0845 UT

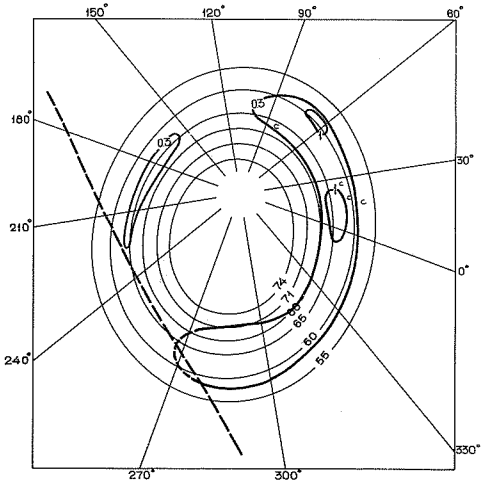

MAY 17, 1969, 0900 UT

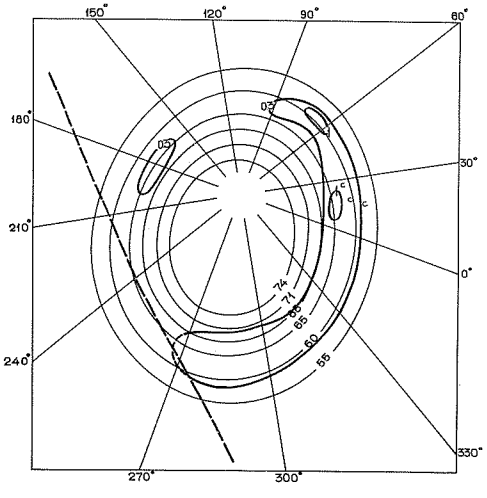

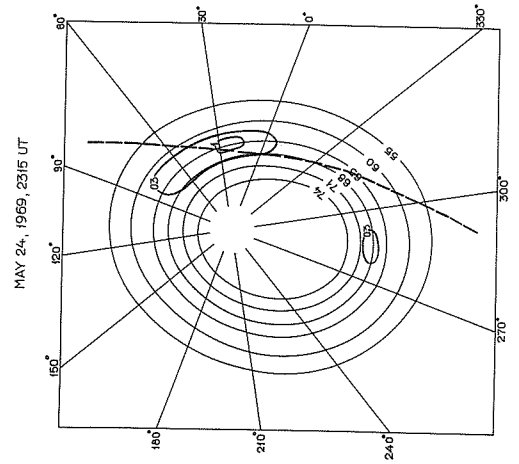
MAY 24, 1969, 2315 UT

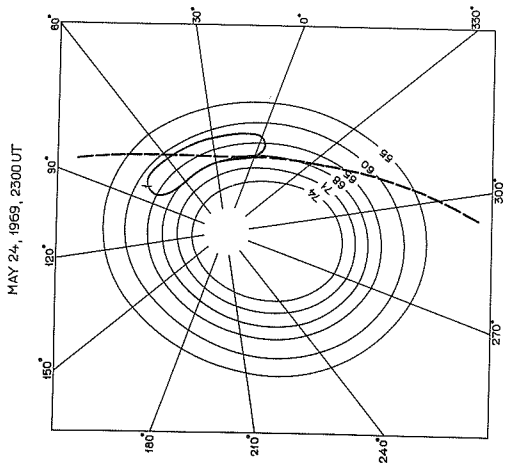
MAY 24, 1969, 2300 UT

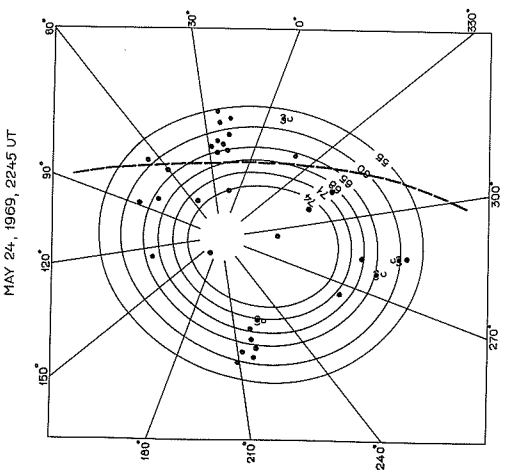
MAY 24, 1969, 2245 UT

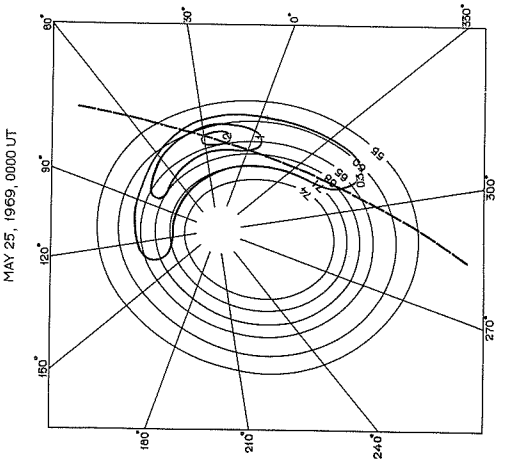
MAY 25, 1969, 0000 UT

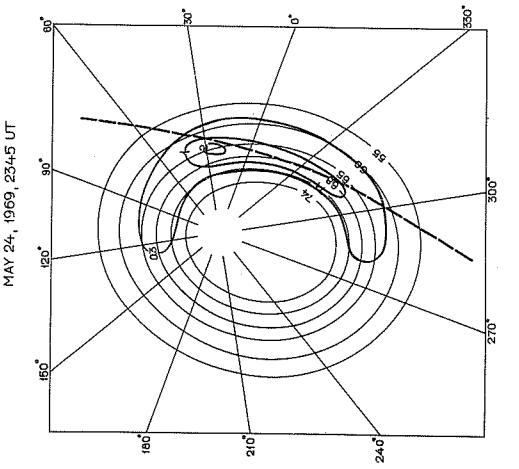
MAY 24, 1969, 2345 UT

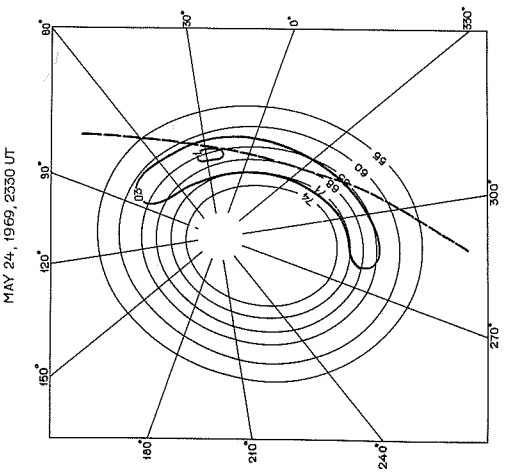
MAY 24, 1969, 2330 UT

MAY 25, 1969, 0015 UT

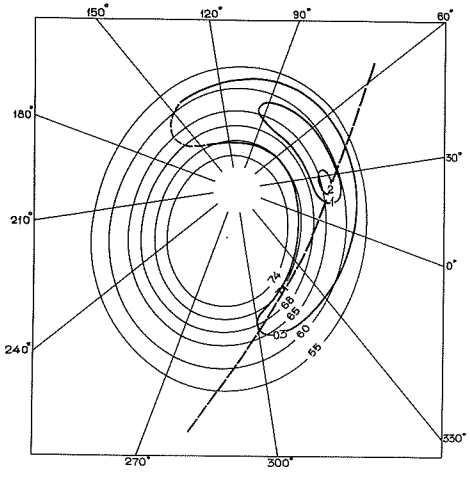

MAY 25, 1969, 0030 UT

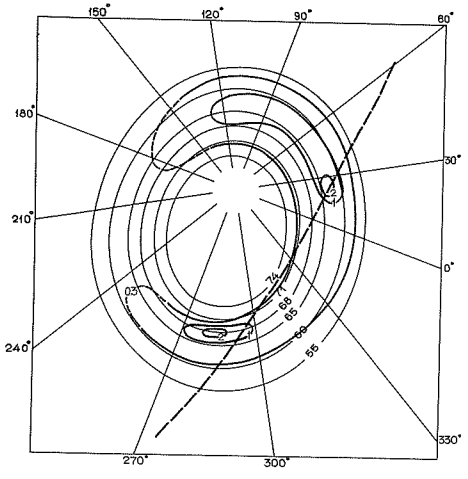

MAY 25, 1969, 0045 UT

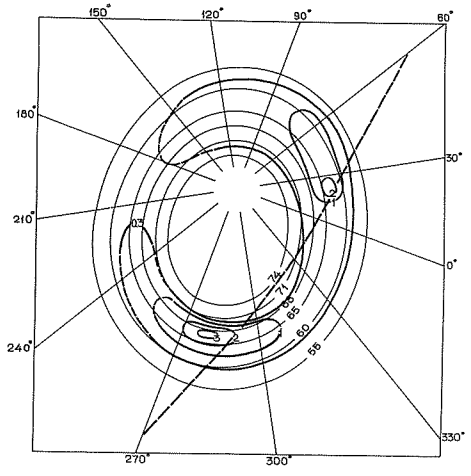

MAY 25, 1969, 0100 UT

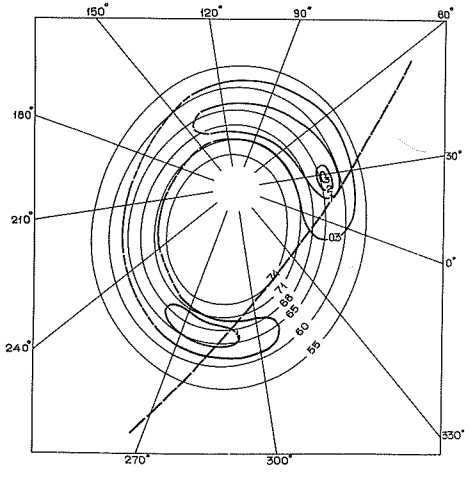

MAY 25, 1969, 0115 UT

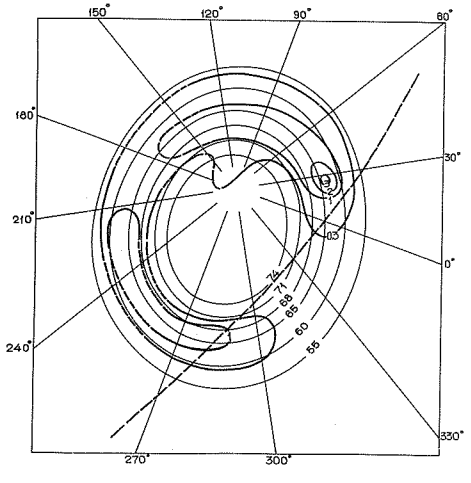

MAY 25, 1969, 0130 UT

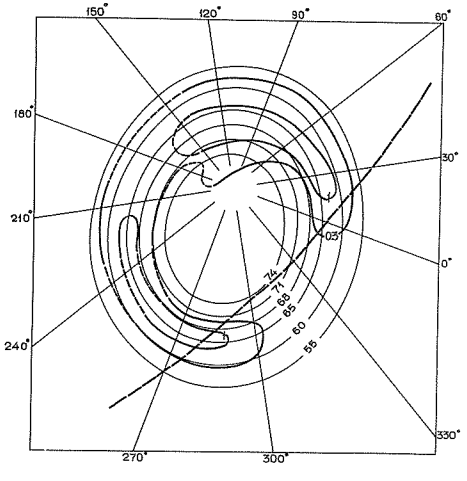

JULY 14, 1969, 0400 UT

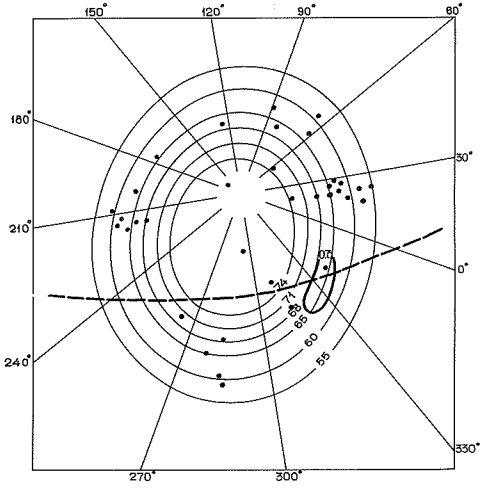

JULY 14, 1969, 0415 UT

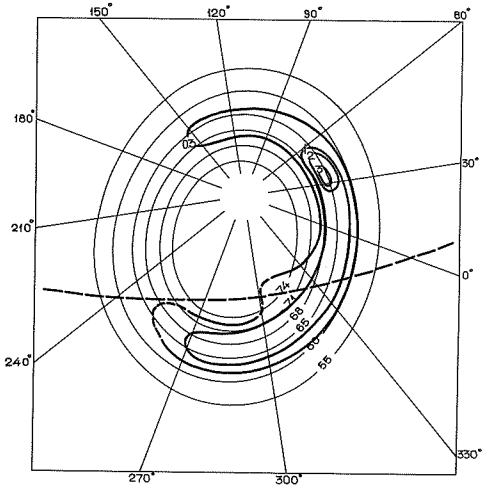

JULY 14, 1969, 0430 UT

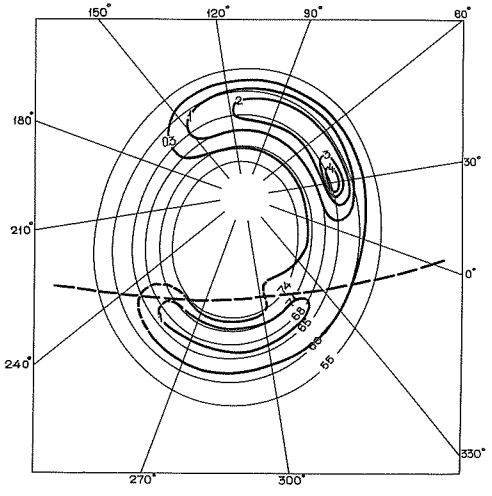

JULY 14, 1969, 0445 UT

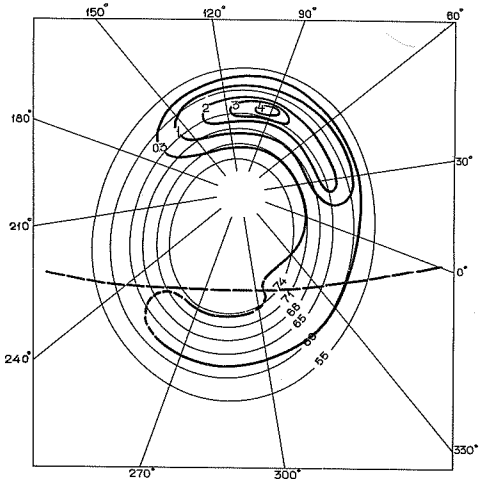

JULY 14, 1969, 0500 UT

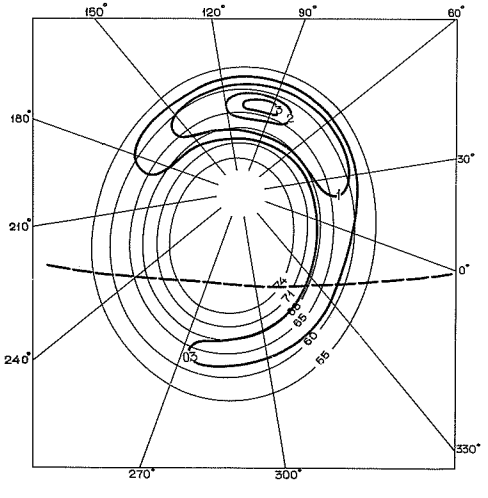

JULY 14, 1969, 0515 UT

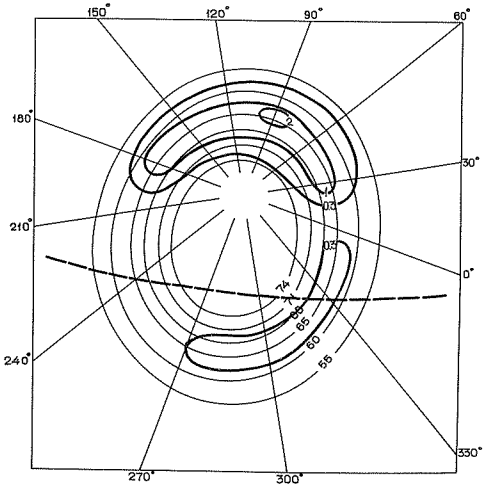

JULY 14, 1969, 0530 UT

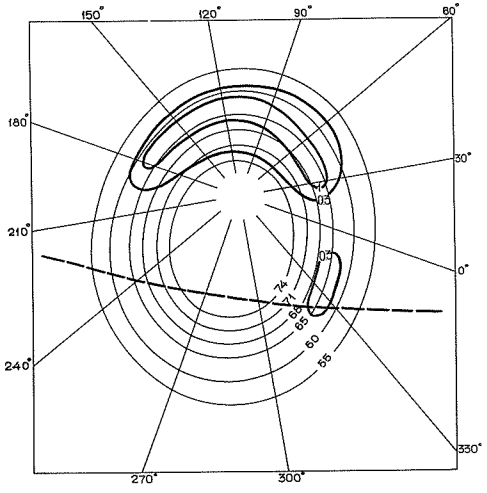

JULY 14, 1969, 0545 UT

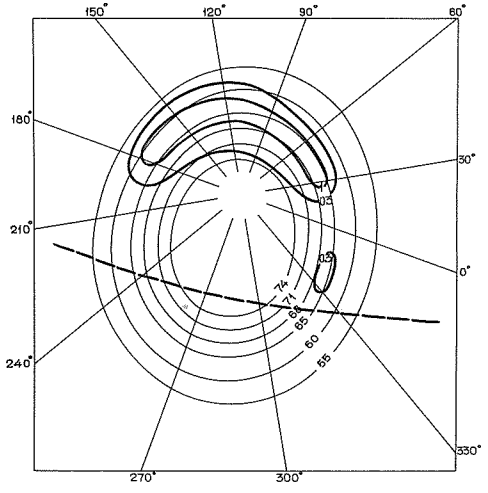

JULY 14, 1969, 0600 UT

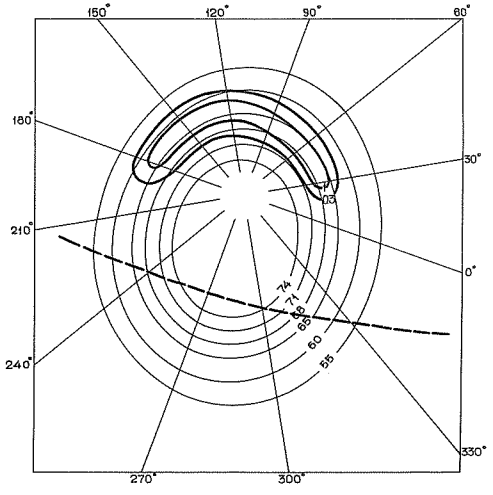

JULY 14, 1969, 0615 UT

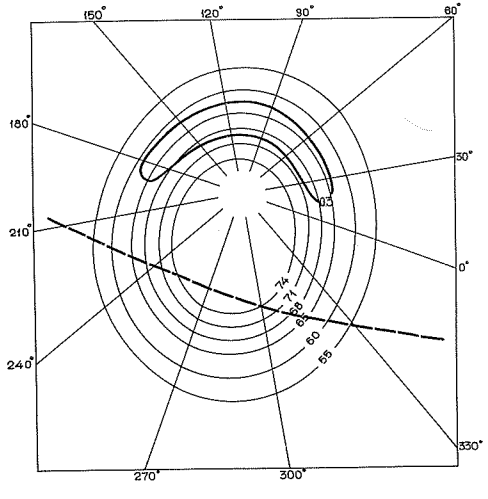

JULY 14, 1969, 0630 UT

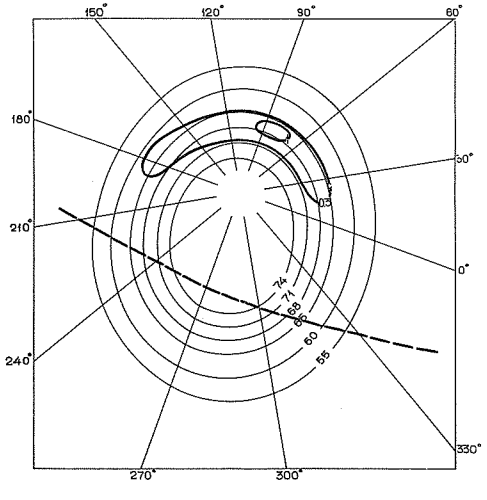

JULY 14, 1969, 0645 UT

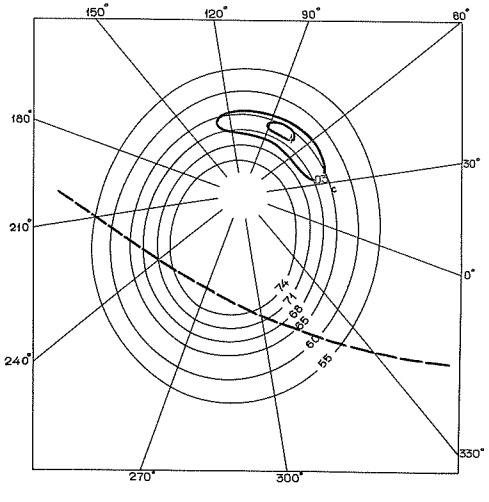

JULY 26, 1969, 2315 UT

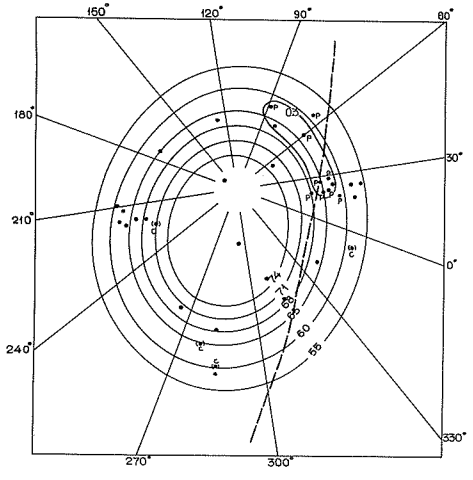

JULY 26, 1969, 2330 UT

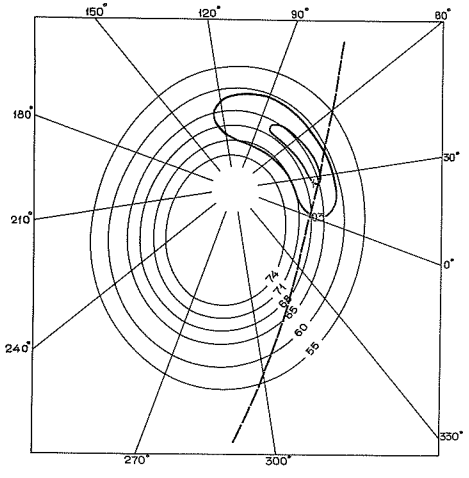

JULY 26, 1969, 2345 UT

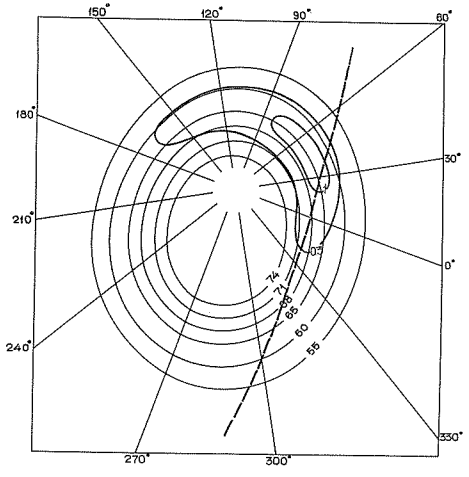

JULY 27, 1969, 0000 UT

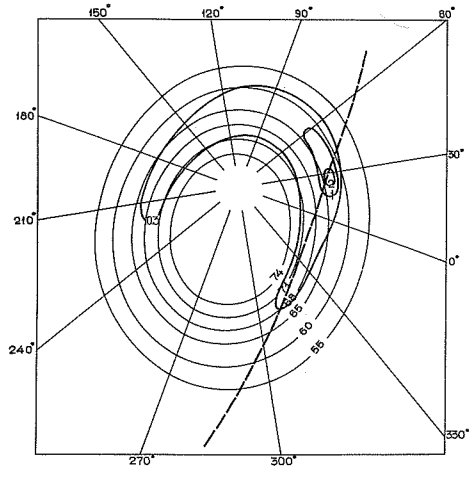

JULY 27, 1969, 0015 UT

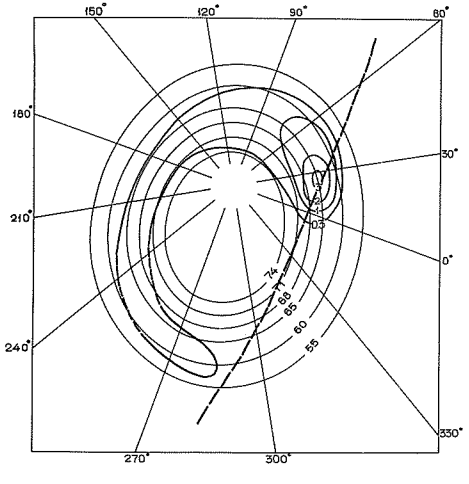

JULY 27, 1969, 0030 UT

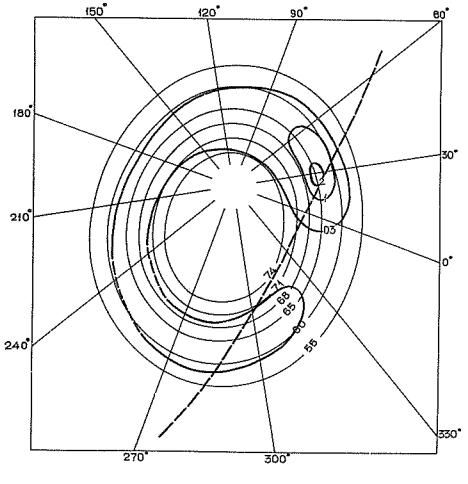

JULY 27, 1969, 0045 UT

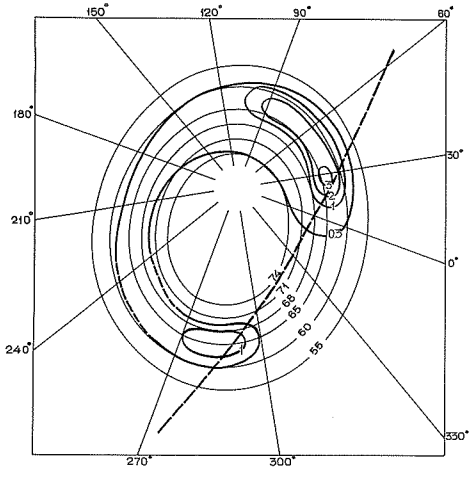

JULY 27, 1969, 0100 UT

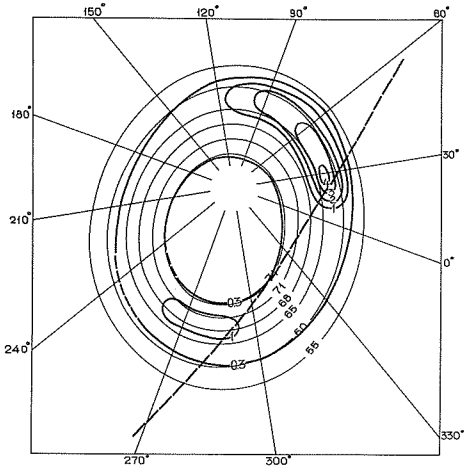

JULY 27, 1969, 0115 UT

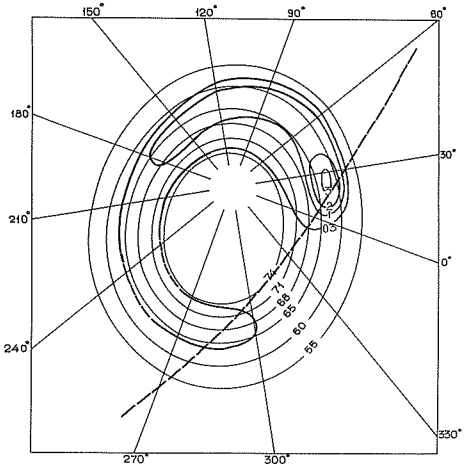

JULY 27, 1969, 0130 UT

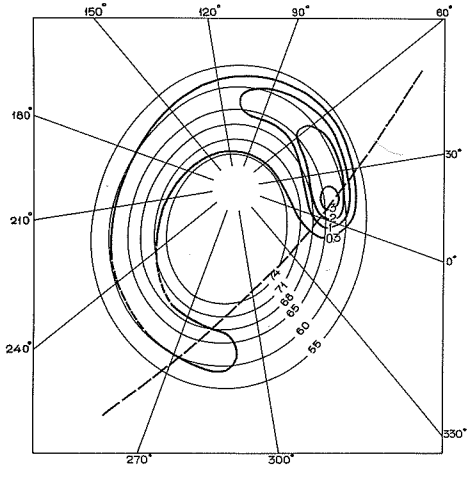

JULY 27, 1969, 0145 UT

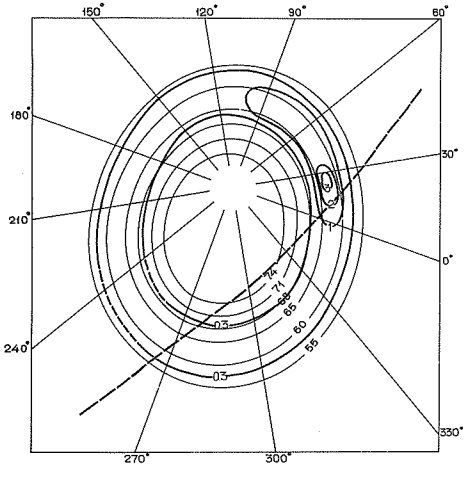

JULY 27, 1969, 0200 UT

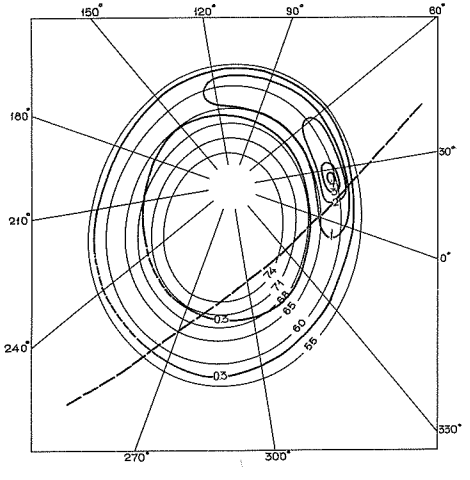

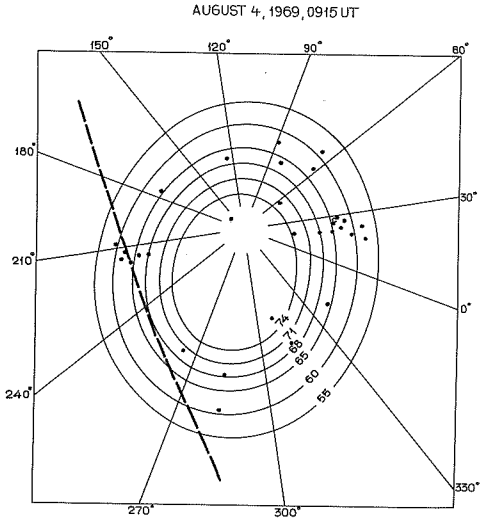
AUGUST 4, 1969, 0915 UT
150°
120°
90°
60°
180°
30°
210°
0°
240°
330°
270°
300°
74
71
68
65
60
55

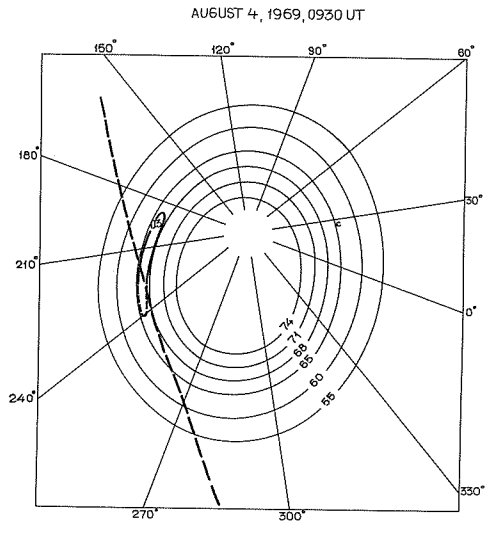
AUGUST 4, 1969, 0930 UT
150°
120°
90°
60°
180°
30°
210°
0°
240°
330°
270°
300°
74
71
68
65
60
55

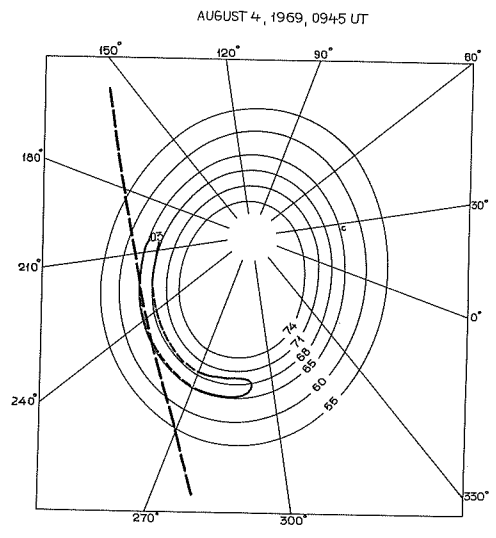
AUGUST 4, 1969, 0945 UT
150°
120°
90°
60°
180°
30°
210°
0°
240°
330°
270°
300°
74
71
68
65
60
55

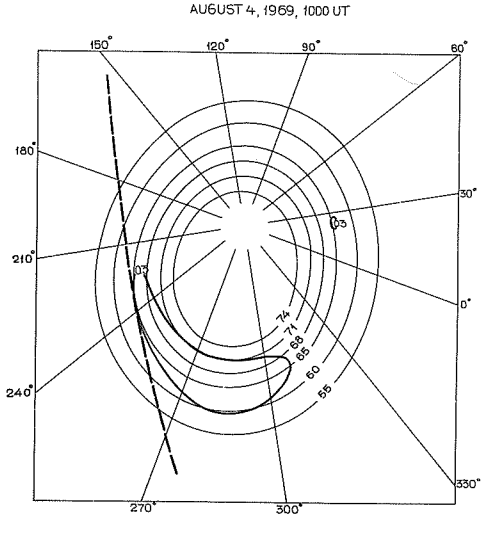
AUGUST 4, 1969, 1000 UT
150°
120°
90°
60°
180°
30°
210°
0°
240°
330°
270°
300°
74
71
68
65
60
55

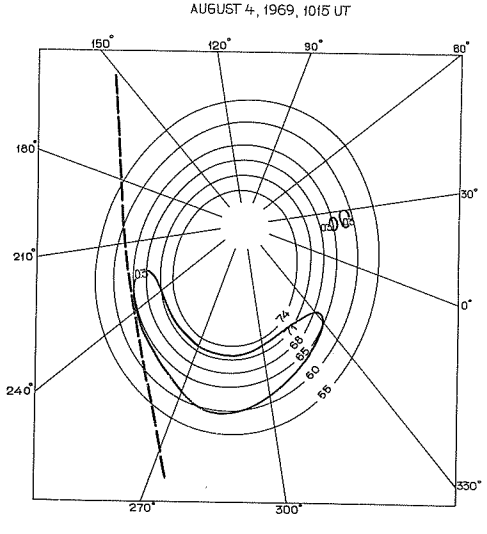
AUGUST 4, 1969, 1015 UT
150°
120°
90°
60°
180°
30°
210°
0°
240°
330°
270°
300°
74
71
68
65
60
55

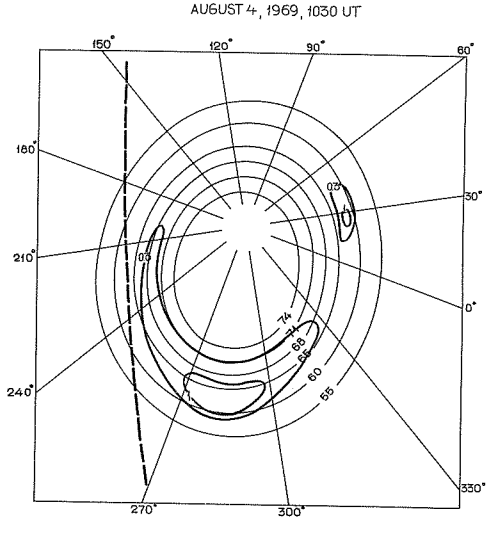
AUGUST 4, 1969, 1030 UT
150°
120°
90°
60°
180°
30°
210°
0°
240°
330°
270°
300°
74
71
68
65
60
55

AUGUST 4, 1969, 1045 UT

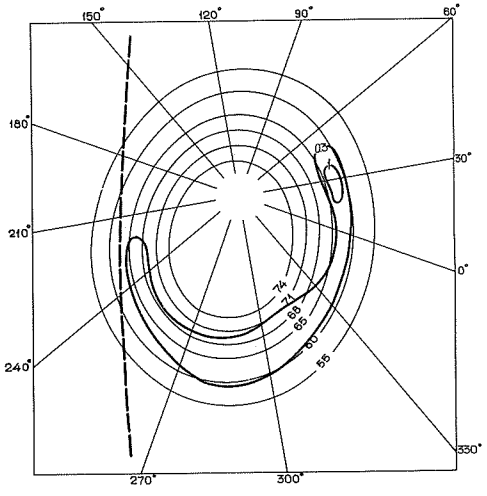

AUGUST 4, 1969, 1100 UT

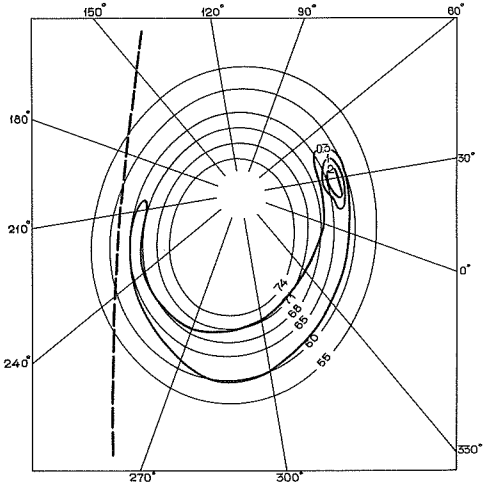

AUGUST 4, 1969, 1115 UT

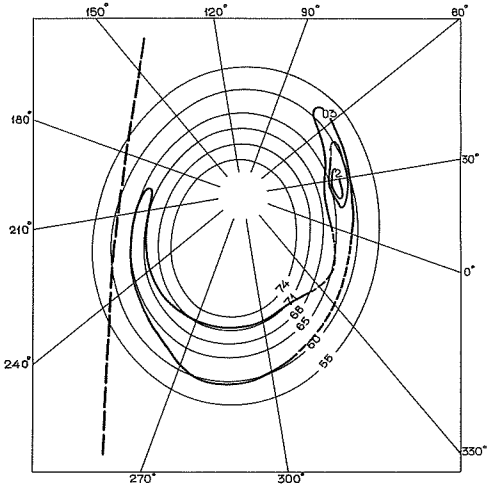

AUGUST 4, 1969, 1130 UT

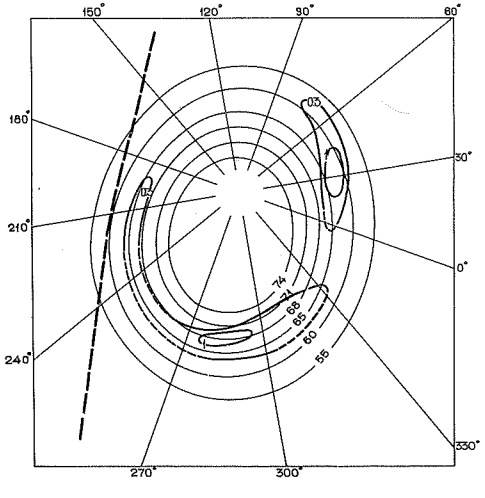

AUGUST 4, 1969, 1145 UT

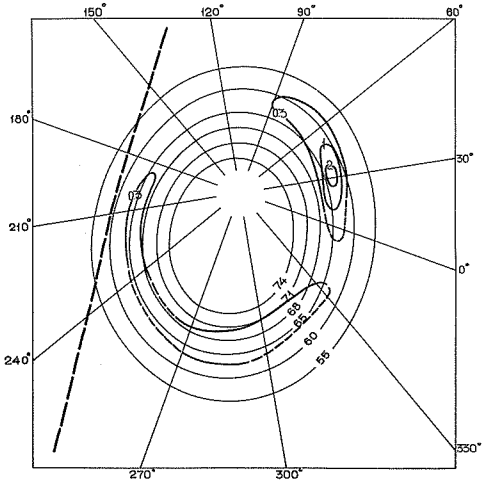

AUGUST 4, 1969, 1200 UT

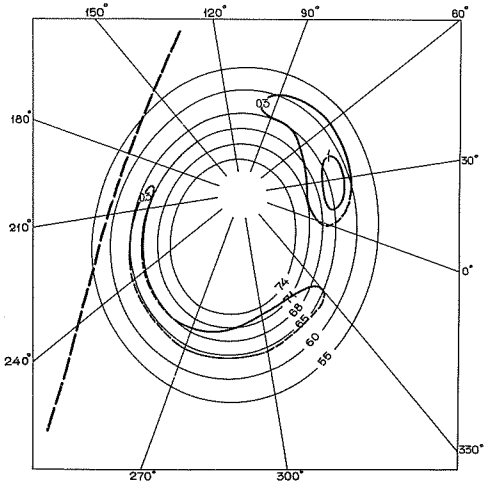

AUGUST 4, 1969, 1215 UT

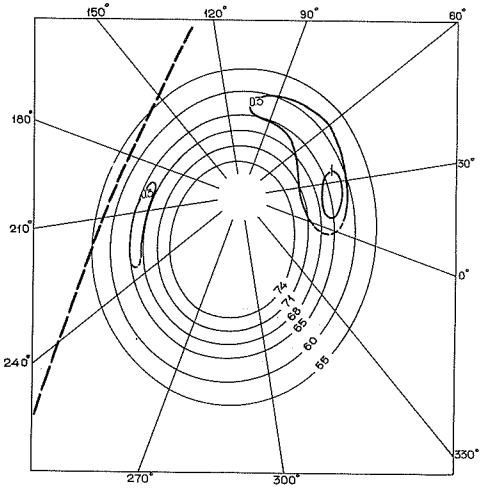

AUGUST 4, 1969, 1230 UT

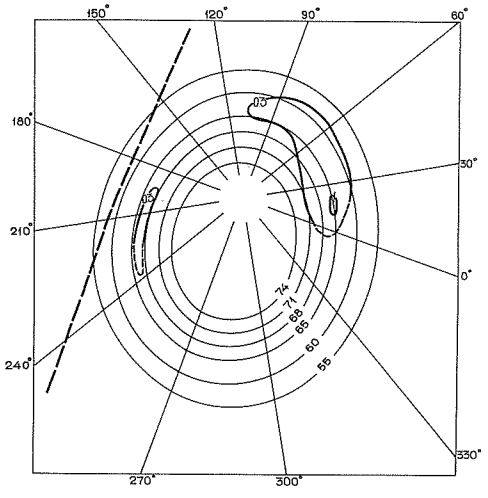

AUGUST 4, 1969, 1245 UT

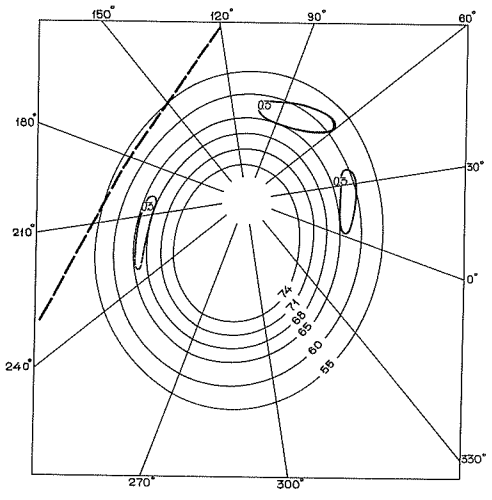

AUGUST 4, 1969, 1300 UT

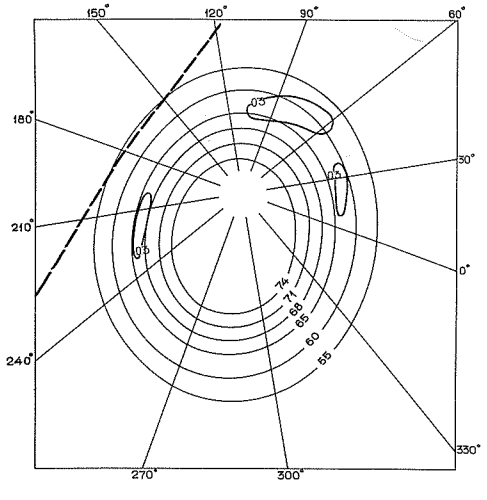

AUGUST 4, 1969, 1315 UT

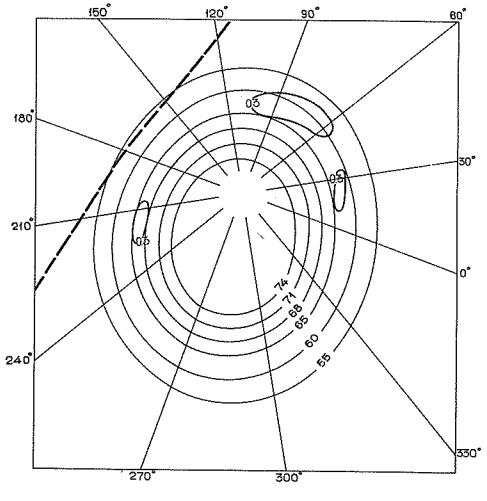

AUGUST 4, 1969, 1330 UT

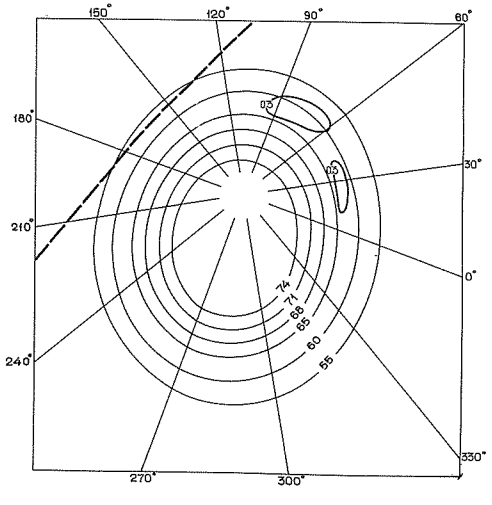

SEPTEMBER 6, 1969, 0515 UT

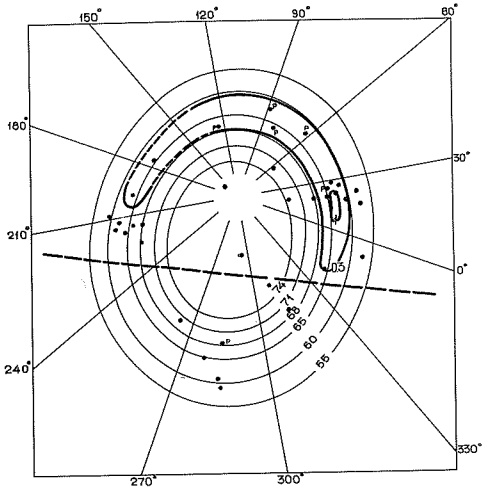

SEPTEMBER 6, 1969, 0530 UT

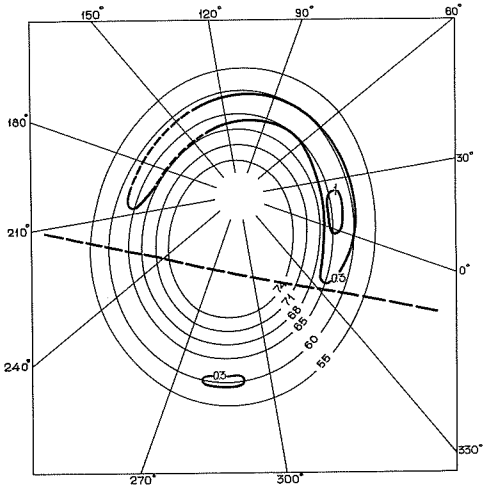

SEPTEMBER 6, 1969, 0545 UT

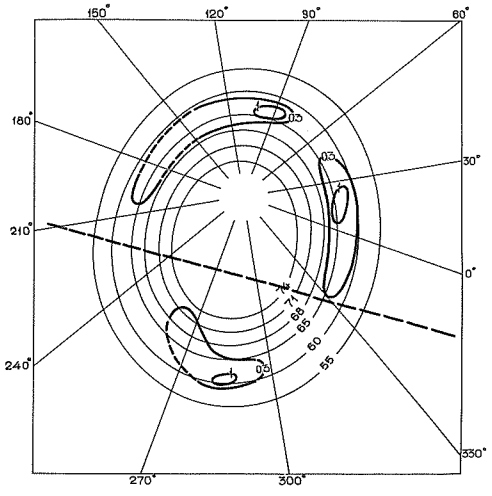

SEPTEMBER 6, 1969, 0600 UT

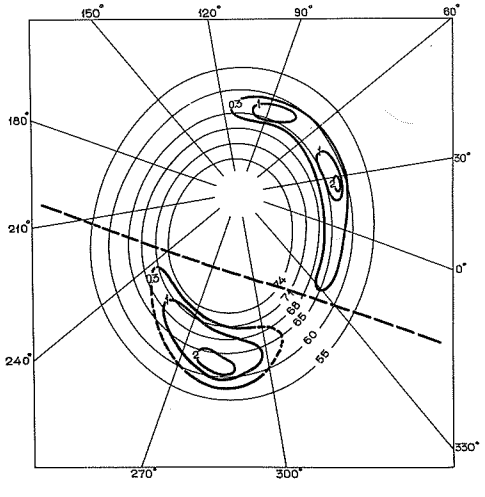

SEPTEMBER 6, 1969, 0615 UT

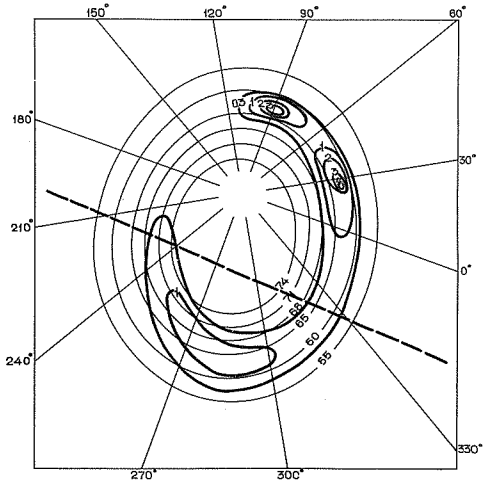

SEPTEMBER 6, 1969, 0630 UT

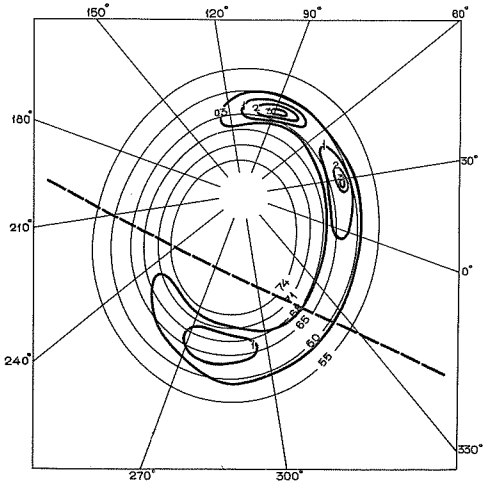

SEPTEMBER 6, 1969, 0645 UT

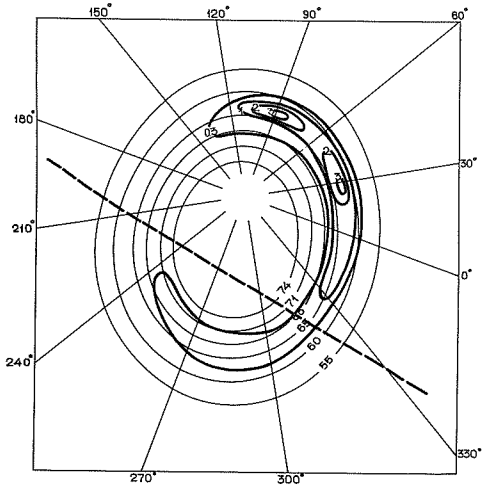

SEPTEMBER 6, 1969, 0700 UT

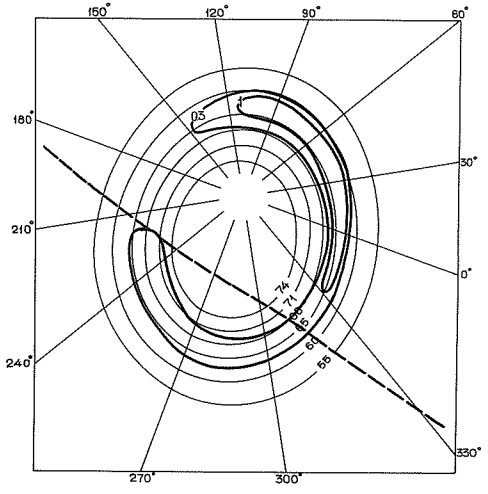

SEPTEMBER 6, 1969, 0730 UT

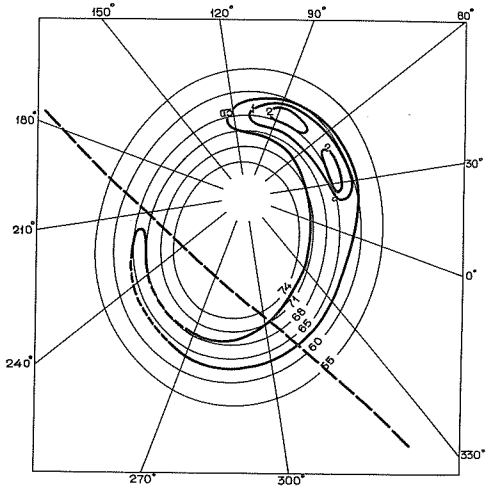

SEPTEMBER 6, 1969, 0800 UT

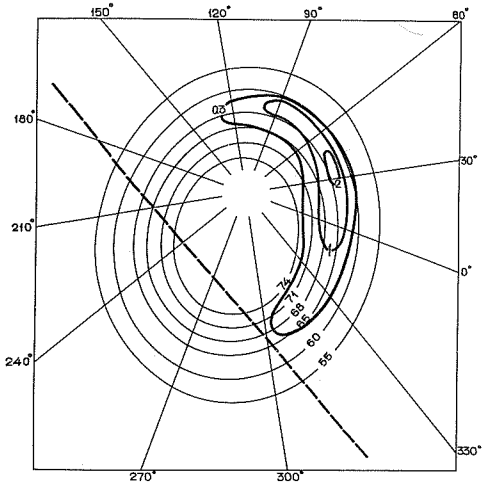

SEPTEMBER 6, 1969, 0830 UT

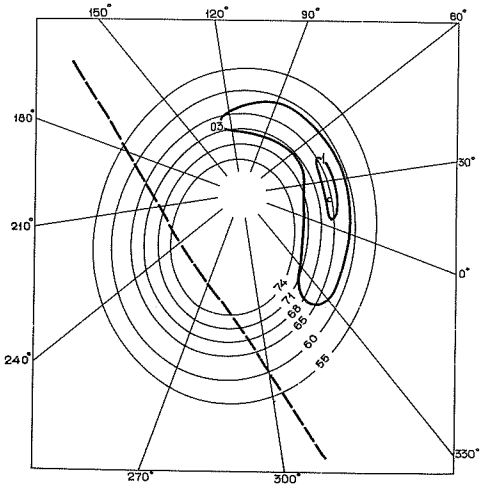

SEPTEMBER 6, 1969, 0900 UT

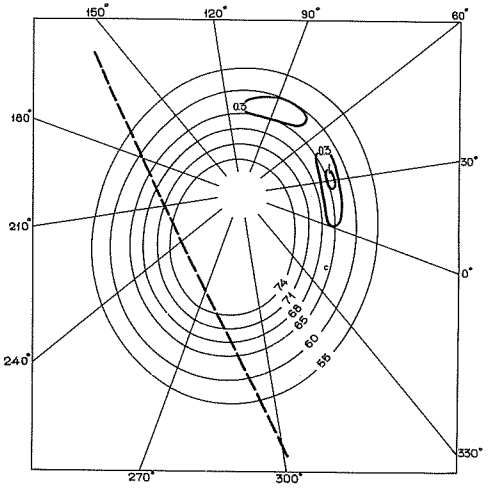

SEPTEMBER 6, 1969, 1015 UT

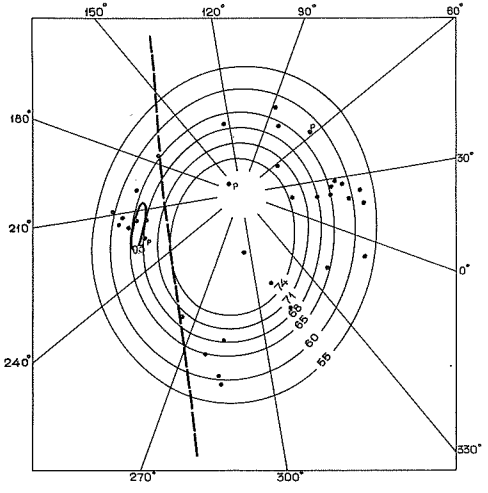

SEPTEMBER 6, 1969, 1030 UT

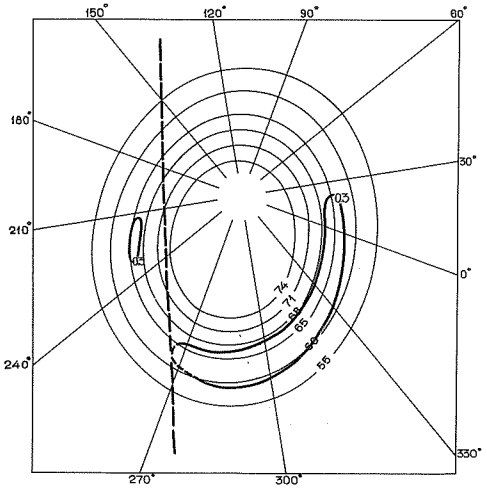

SEPTEMBER 6, 1969, 1045 UT

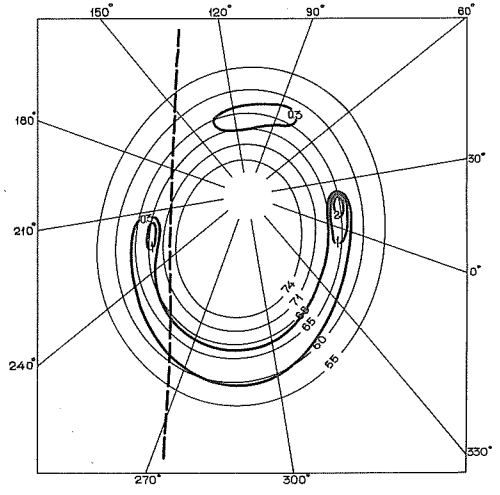

SEPTEMBER 6, 1969, 1100 UT

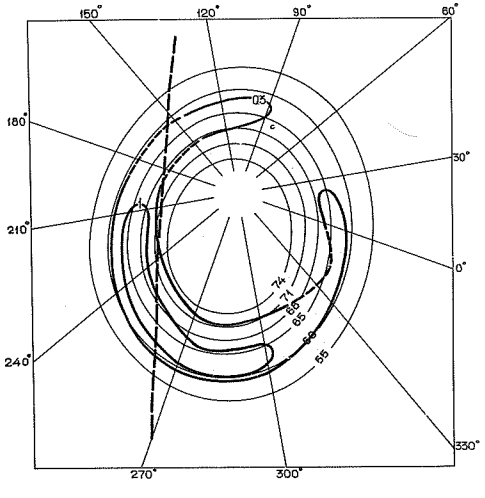

SEPTEMBER 6, 1969, 1115 UT

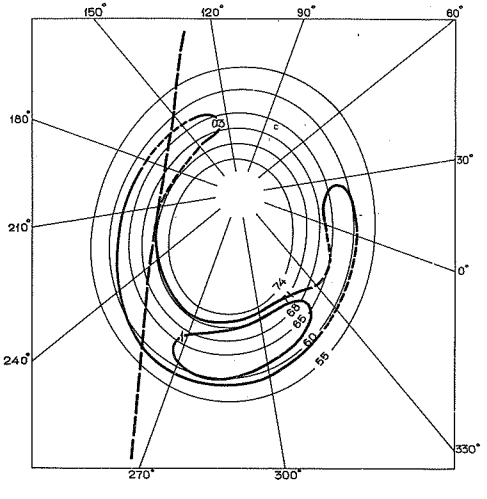

SEPTEMBER 6, 1969, 1130 UT

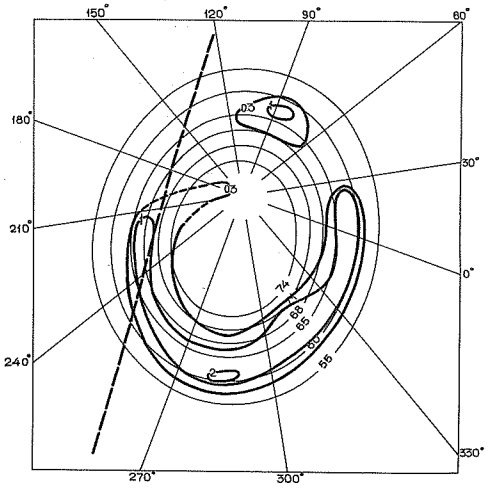

SEPTEMBER 6, 1969, 1145 UT

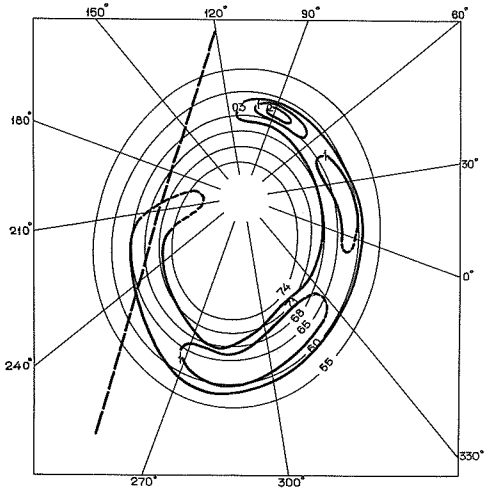

SEPTEMBER 6, 1969, 1200 UT

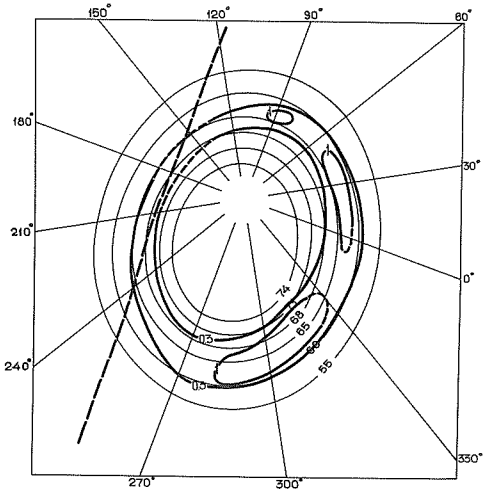

SEPTEMBER 6, 1969, 1230 UT

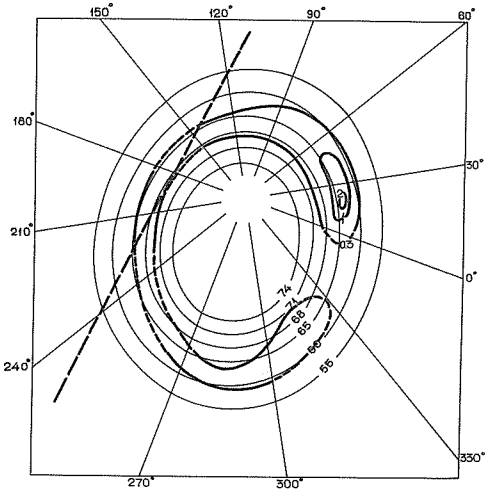

SEPTEMBER 6, 1969, 1300 UT

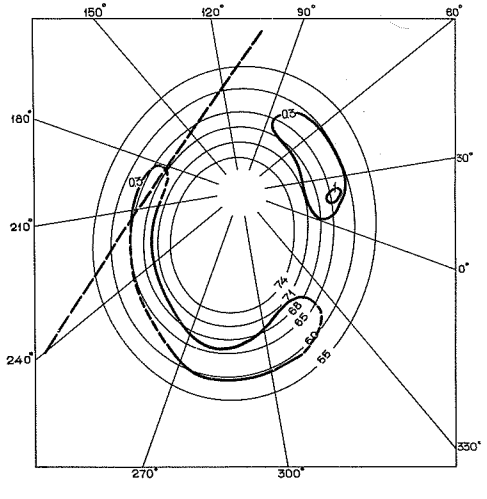

SEPTEMBER 6, 1969, 1330 UT

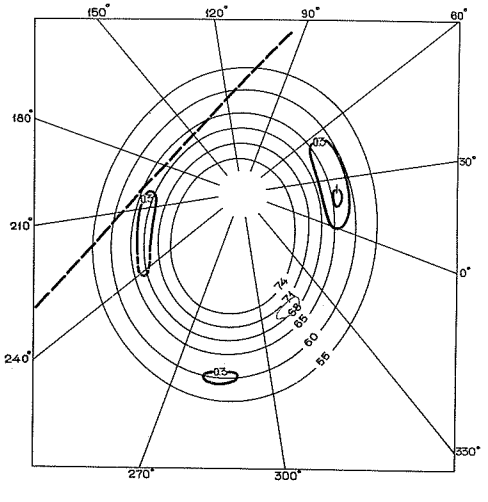

SEPTEMBER 6, 1969, 1400 UT

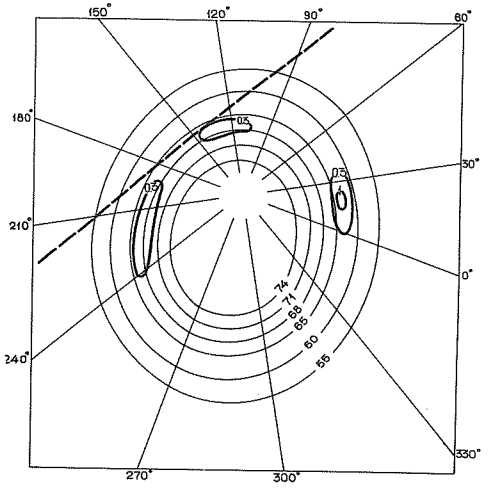

SEPTEMBER 8, 1969, 0230 UT

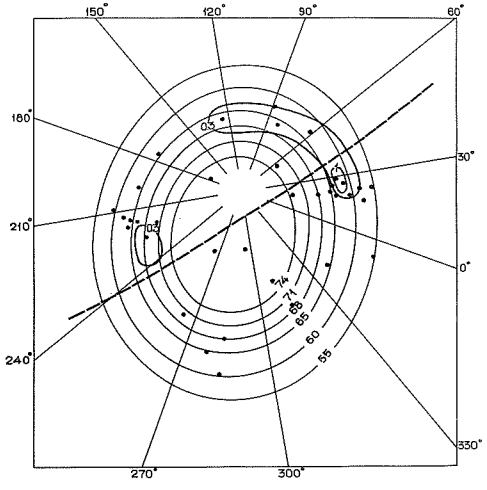

SEPTEMBER 8, 1969, 0245 UT

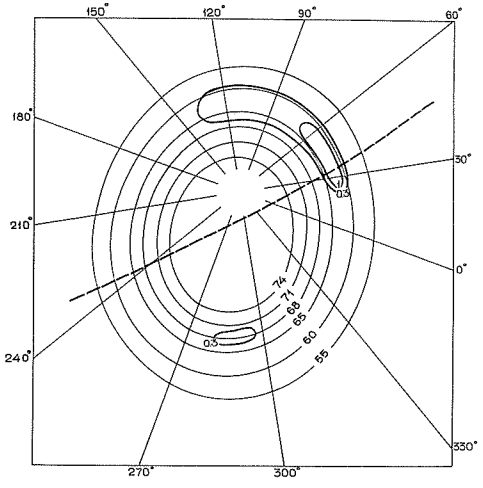

SEPTEMBER 8, 1969, 0300 UT

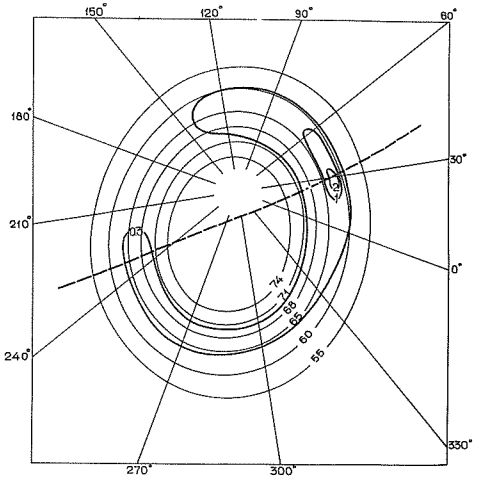

SEPTEMBER 8, 1969, 0315 UT

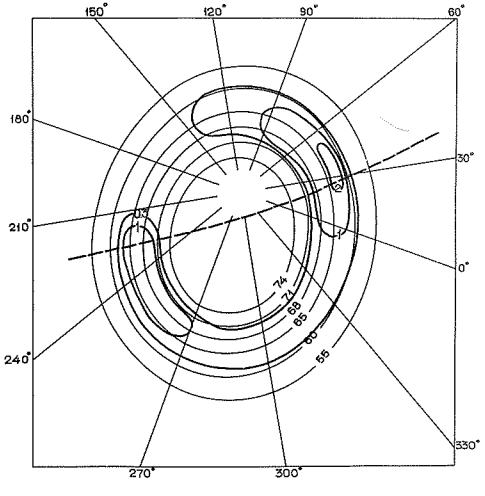

SEPTEMBER 8, 1969, 0330 UT

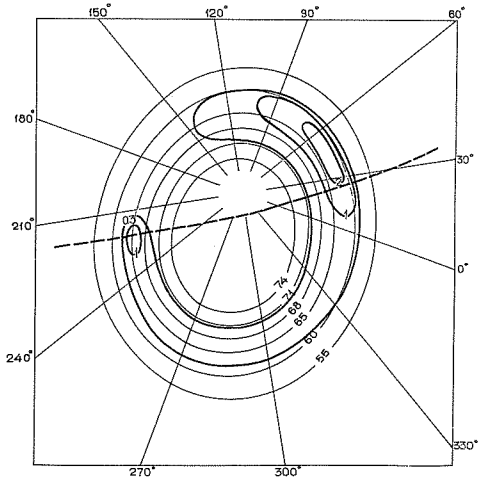

SEPTEMBER 8, 1969, 0345 UT

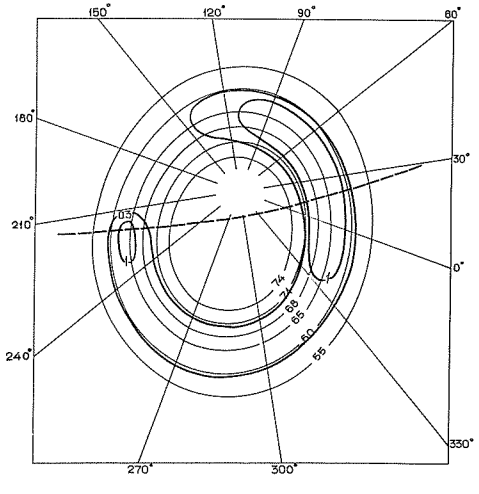

SEPTEMBER 8, 1969, 0400 UT

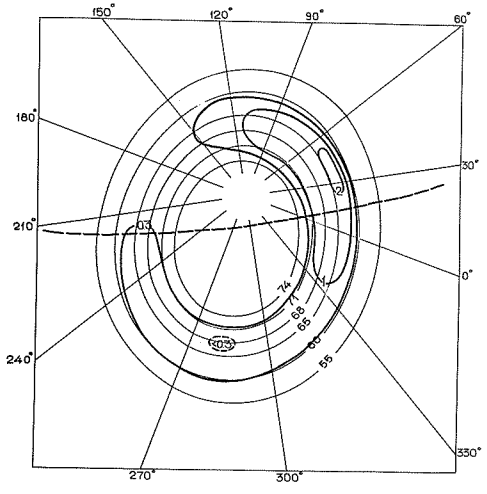

SEPTEMBER 8, 1969, 0415 UT

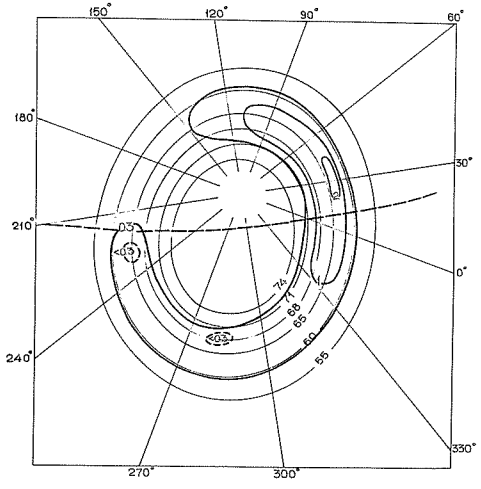

SEPTEMBER 8, 1969, 0430 UT

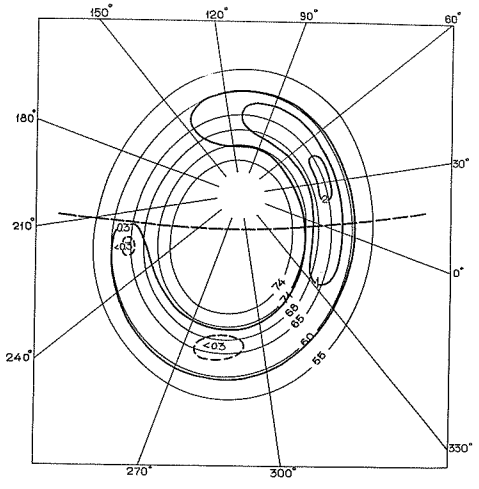

SEPTEMBER 8, 1969, 0445 UT

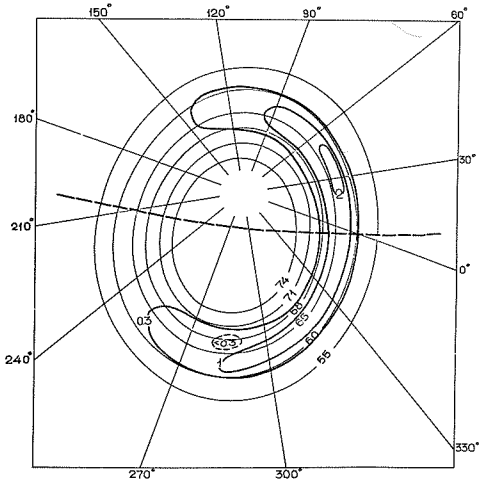

SEPTEMBER 8, 1969, 0500 UT

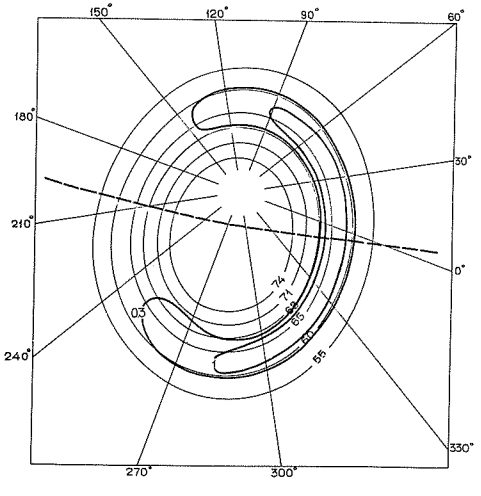

SEPTEMBER 8, 1969, 0515 UT

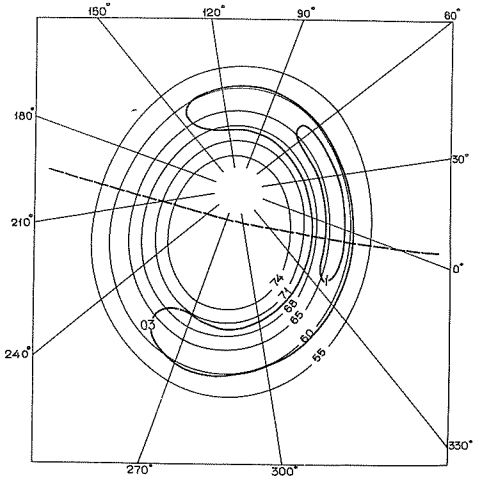

SEPTEMBER 16, 1969, 0245 UT

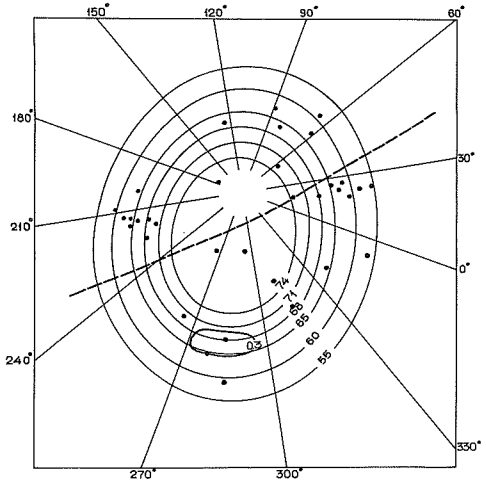

SEPTEMBER 16, 1969, 0300 UT

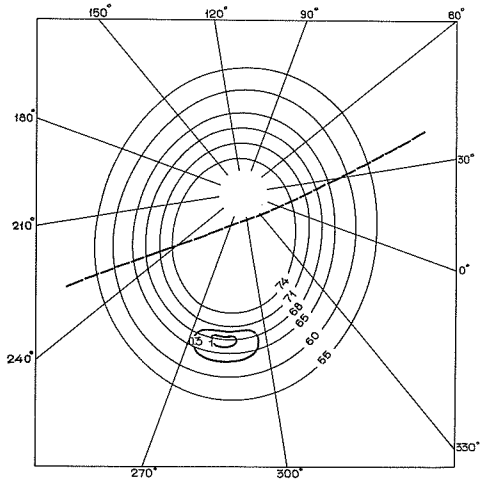

SEPTEMBER 16, 1969, 0315 UT

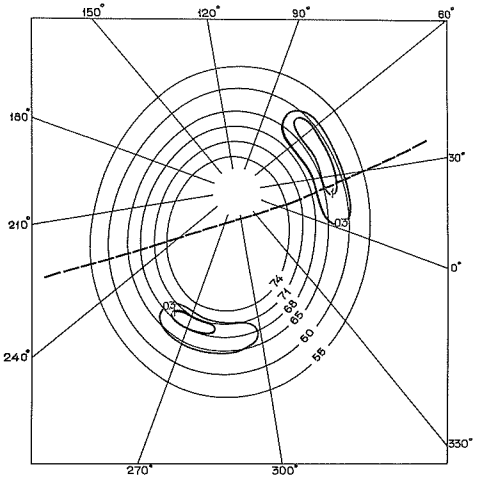

SEPTEMBER 16, 1969, 0330 UT

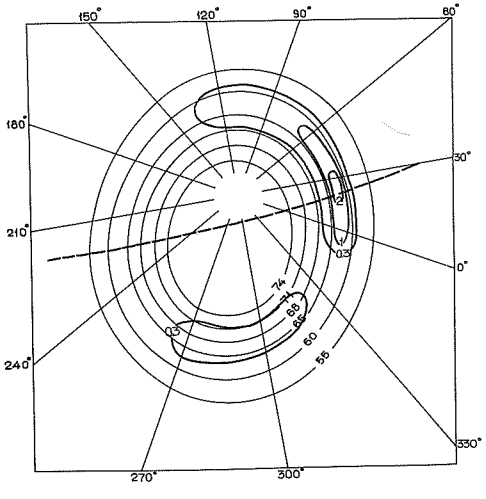

SEPTEMBER 16, 1969, 0345 UT

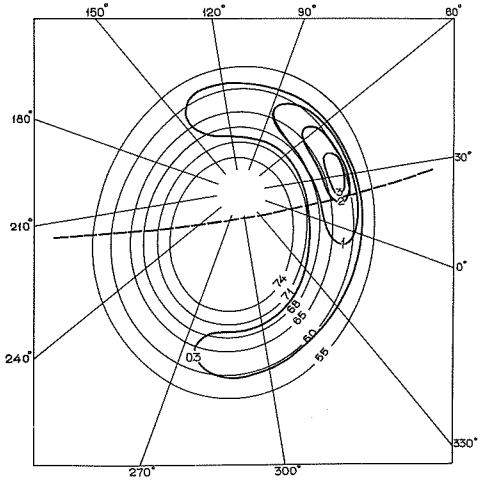

SEPTEMBER 16, 1969, 0400 UT

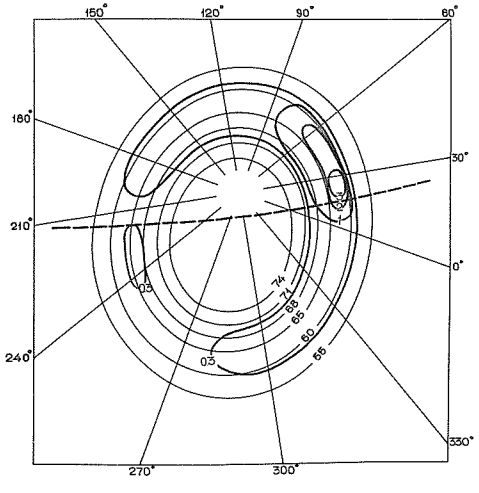

SEPTEMBER 16, 1969, 0415 UT

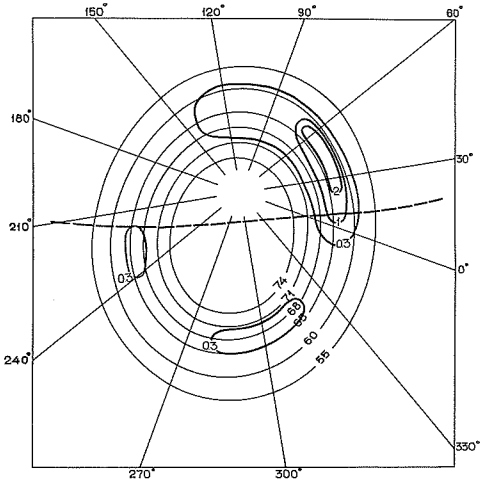

SEPTEMBER 16, 1969, 0430 UT

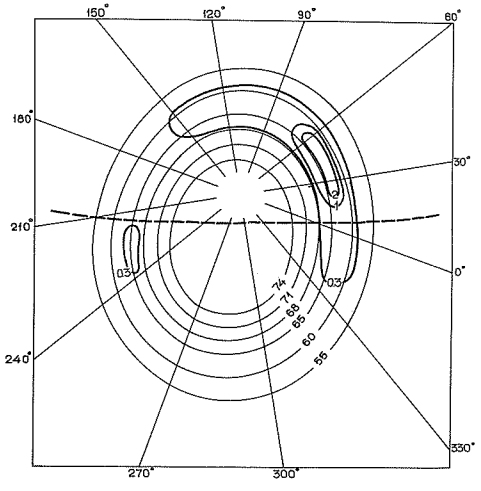

SEPTEMBER 16, 1969, 0445 UT

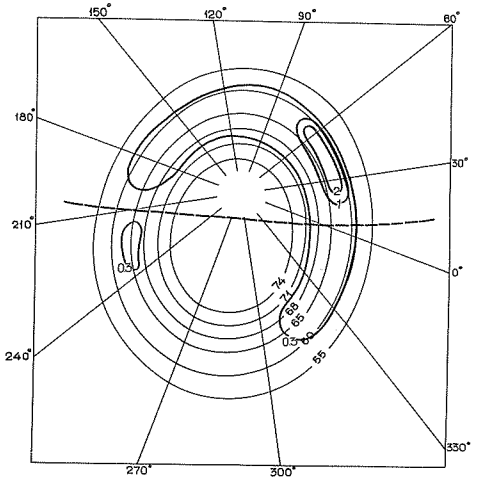

SEPTEMBER 16, 1969, 0500 UT

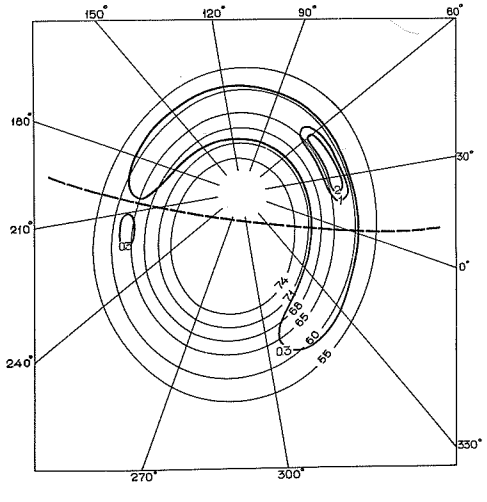

SEPTEMBER 16, 1969, 0515 UT

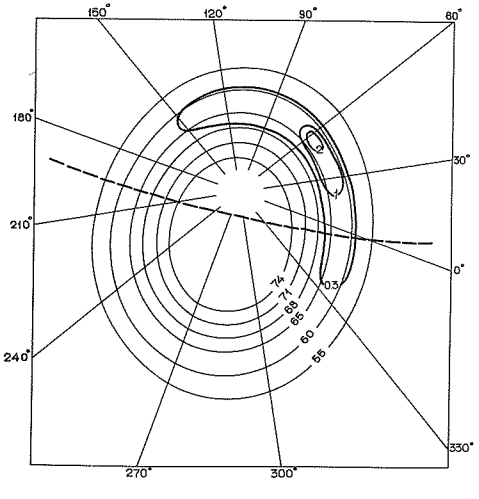

SEPTEMBER 16, 1969, 0530 UT

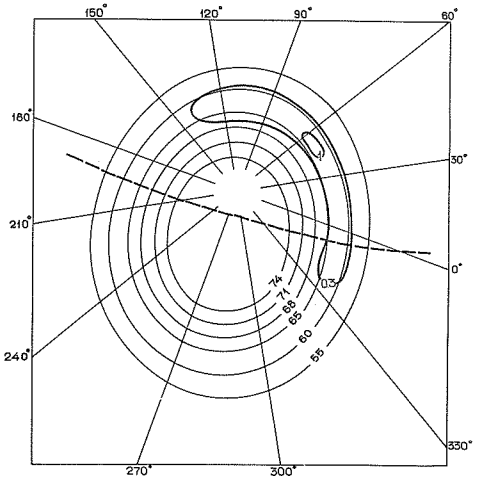

SEPTEMBER 29, 1969, 2217 UT

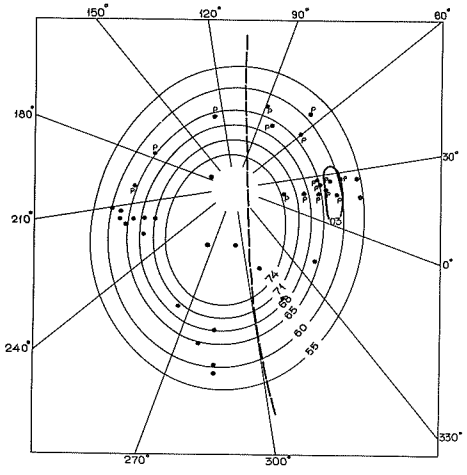

SEPTEMBER 29, 1969, 2222 UT

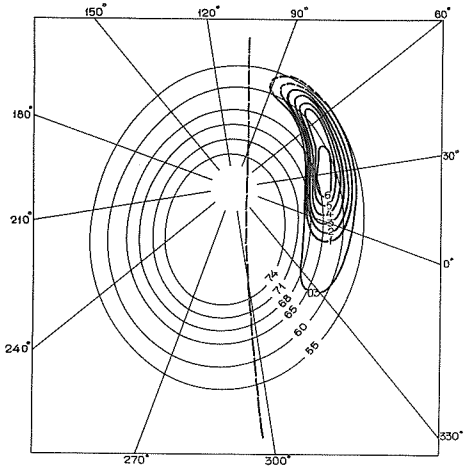

SEPTEMBER 29, 1969, 2227 UT

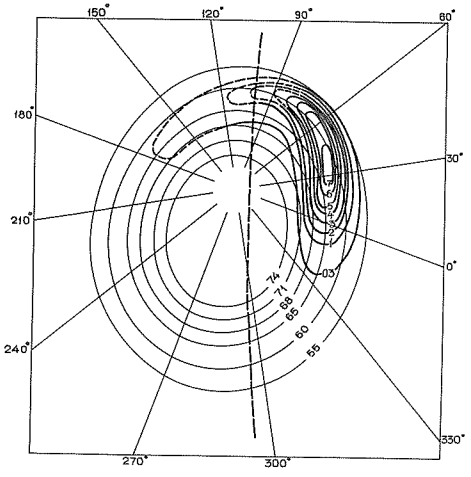

SEPTEMBER 29, 1969, 2232 UT

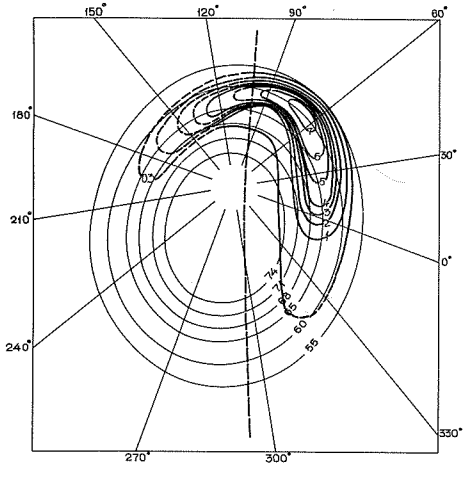

SEPTEMBER 29, 1969, 2237 UT

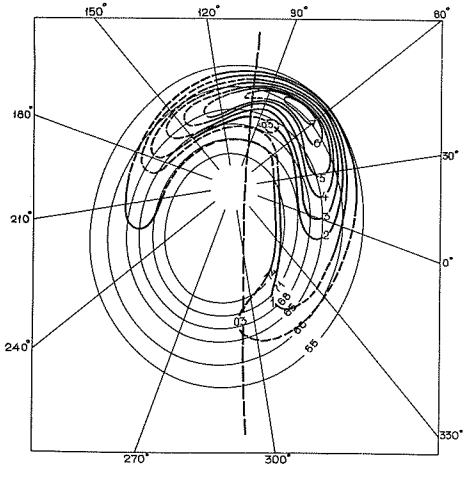

SEPTEMBER 29, 1969, 2242 UT

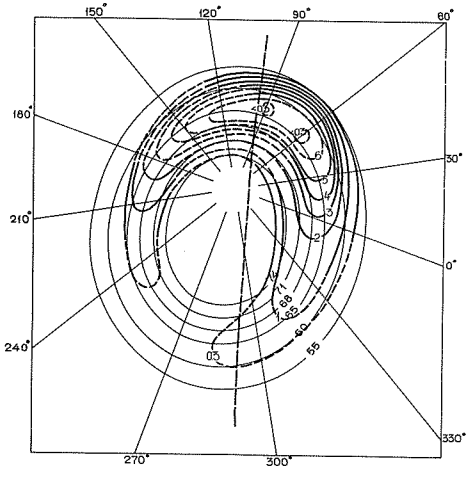

SEPTEMBER 29, 1969, 2247 UT

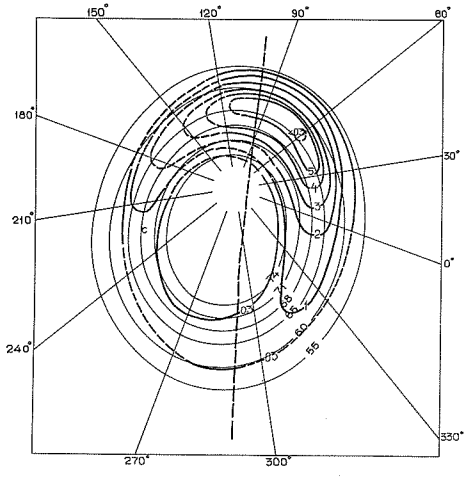

SEPTEMBER 29, 1969, 2257 UT

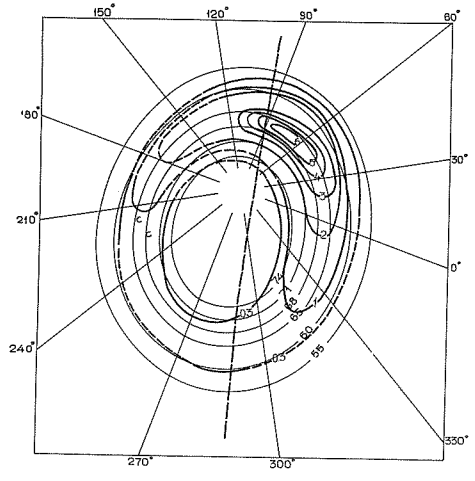

SEPTEMBER 29, 1969, 2307 UT

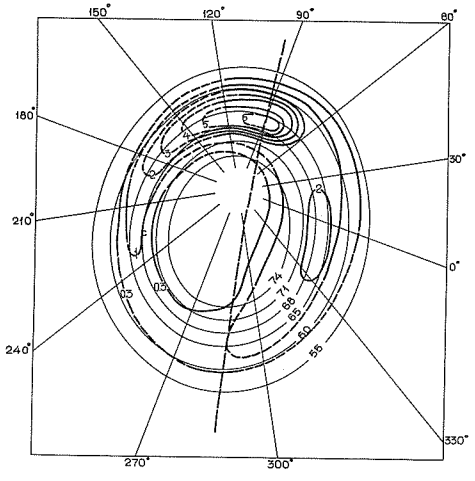

SEPTEMBER 29, 1969, 2327 UT

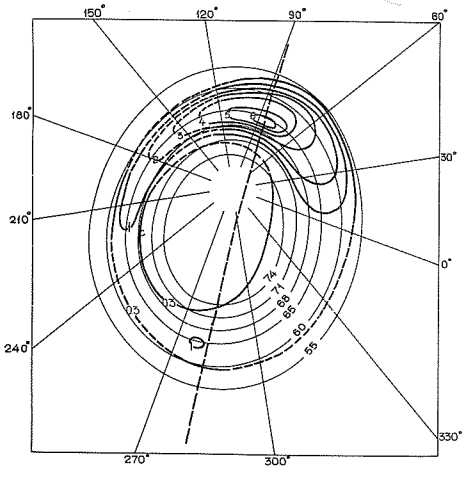

SEPTEMBER 29, 1969, 2337 UT

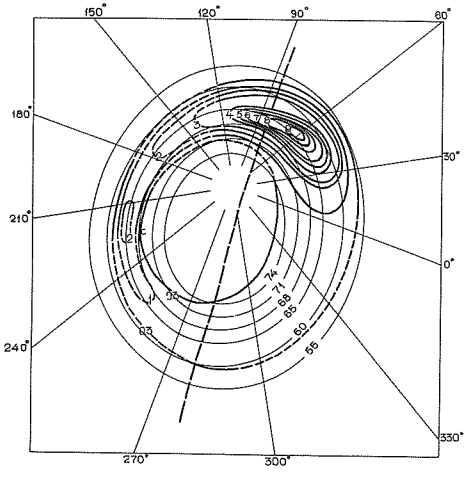

SEPTEMBER 30, 1969, 0007 UT

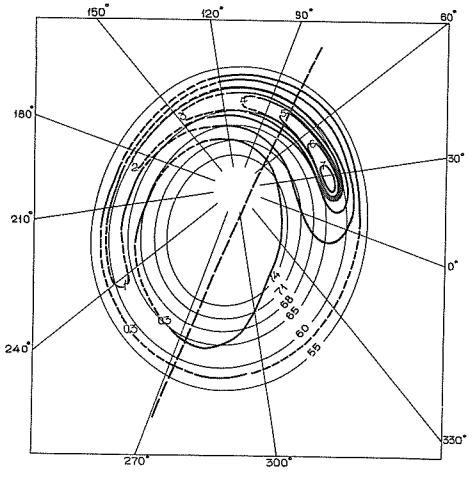

OCTOBER 1, 1969, 0100 UT

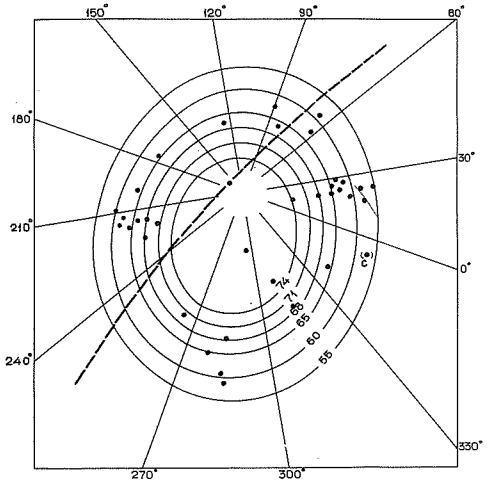

OCTOBER 1, 1969, 0115 UT

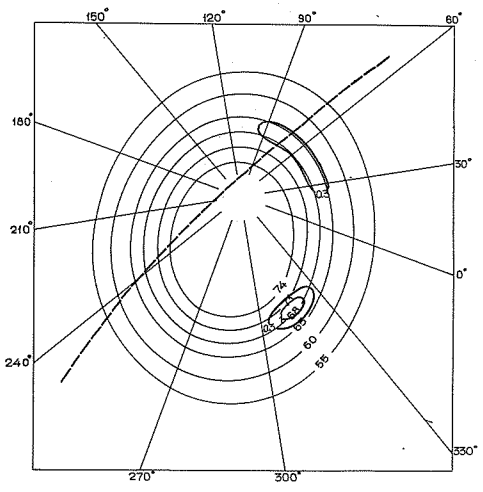

OCTOBER 1, 1969, 0130 UT

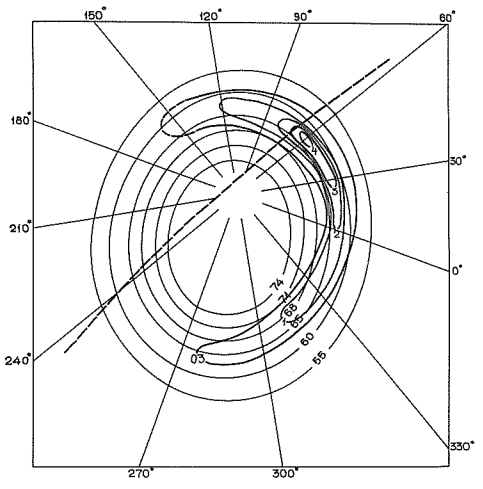

OCTOBER 1, 1969, 0145 UT

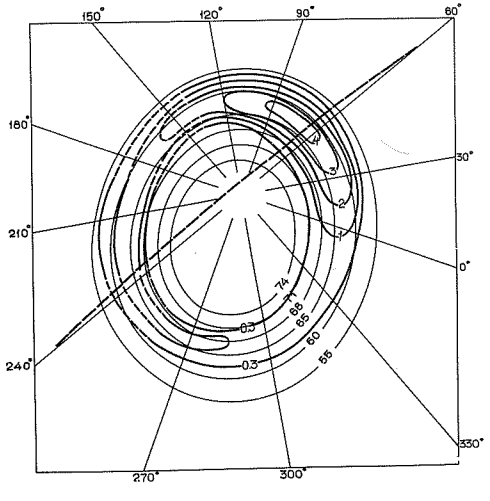

OCTOBER 1, 1969, 0200 UT

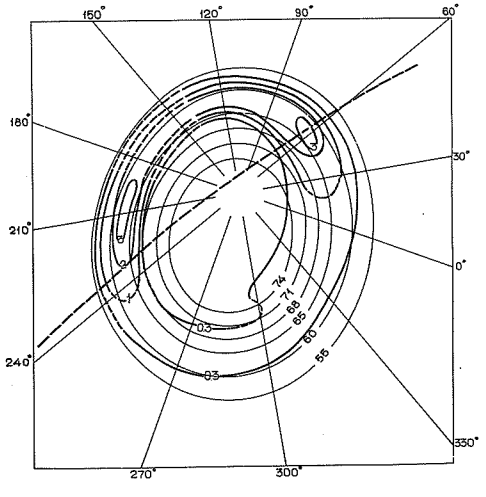

OCTOBER 1, 1969, 0215 UT

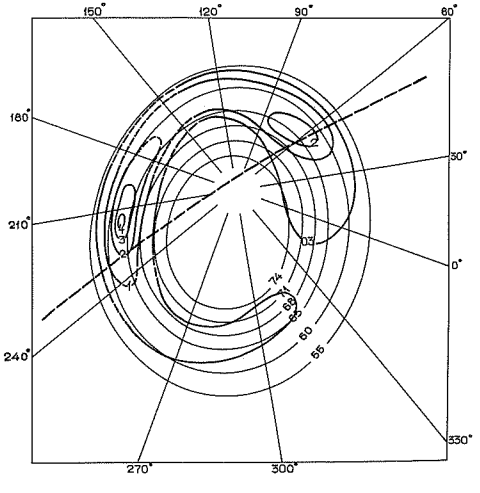

OCTOBER 1, 1969, 0230 UT

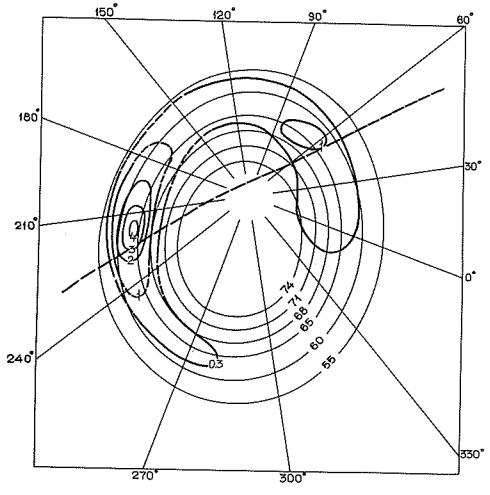

OCTOBER 1, 1969, 0245 UT

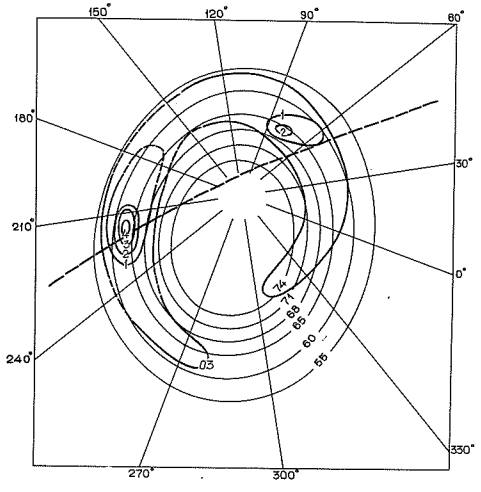

OCTOBER 1, 1969, 0300 UT

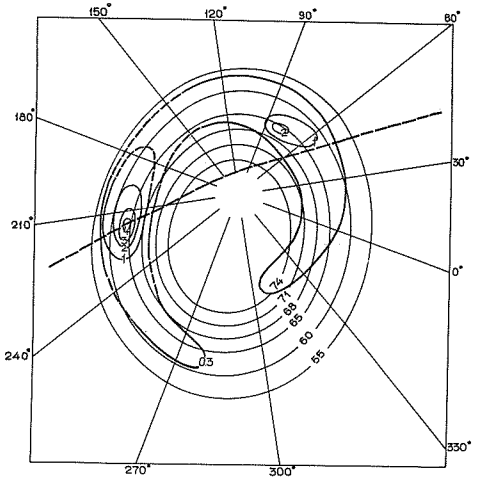

OCTOBER 1, 1969, 0315 UT

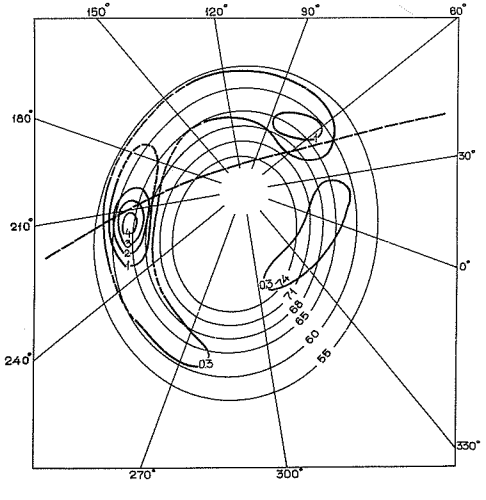

OCTOBER 1, 1969, 0330 UT

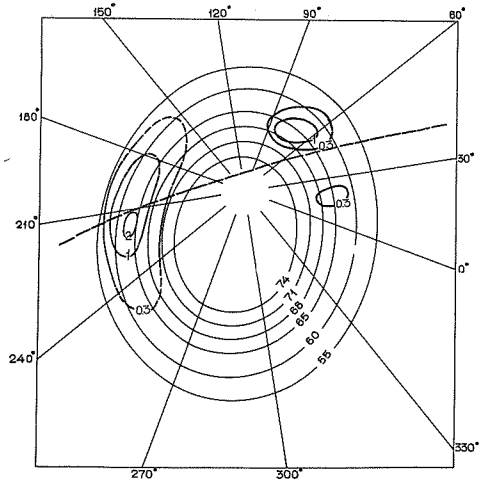

OCTOBER 1, 1969, 0345 UT

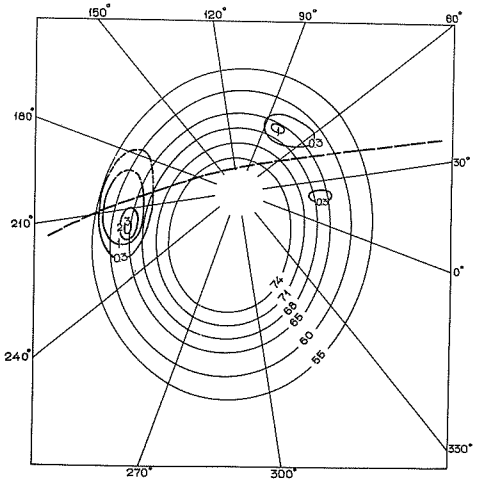

CONTOUR PLOT OF AURORAL ABSORPTION
OCTOBER 1,1969 1305 UT

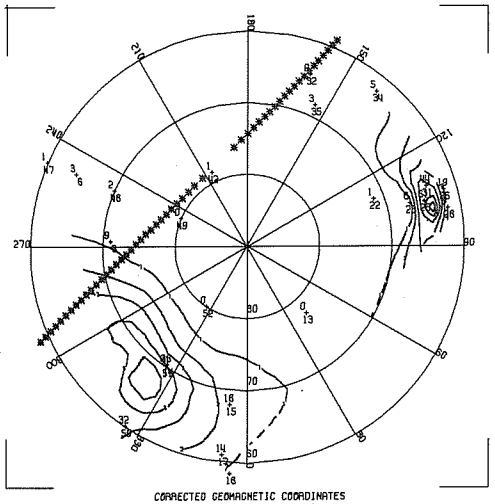

CORRECTED GEOMAGNETIC COORDINATES
CONTOUR INTERVAL = 1.0 DB

CONTOUR PLOT OF AURORAL ABSORPTION
OCTOBER 1,1969 1515 UT

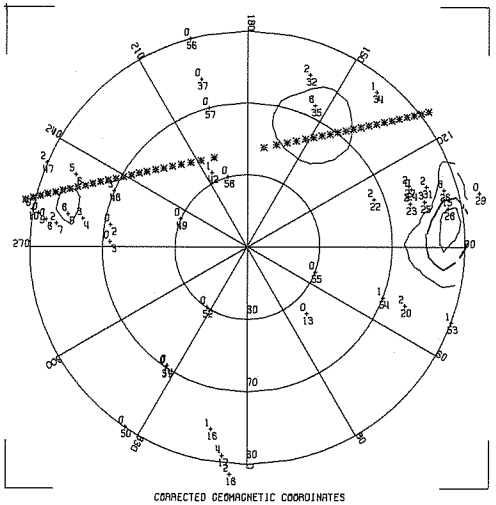

CORRECTED GEOMAGNETIC COORDINATES
CONTOUR INTERVAL = 0.5 DB

CONTOUR PLOT OF AURORAL ABSORPTION
OCTOBER 1,1969 1520 UT

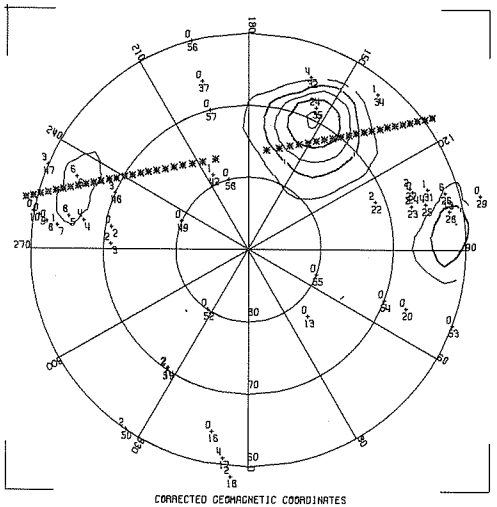

CORRECTED GEOMAGNETIC COORDINATES
CONTOUR INTERVAL = 0.5 DB

CONTOUR PLOT OF AURORAL ABSORPTION
OCTOBER 1,1969 1530 UT

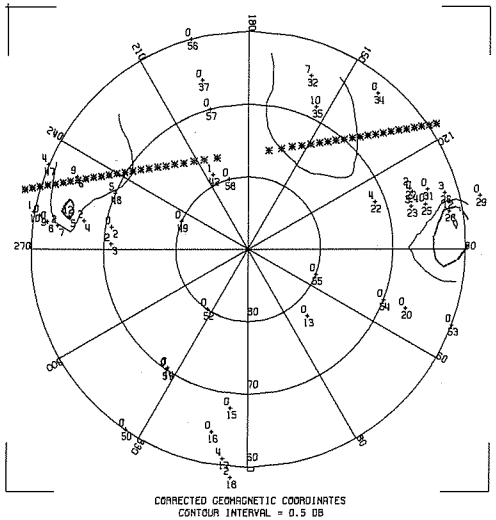

CORRECTED GEOMAGNETIC COORDINATES
CONTOUR INTERVAL = 0.5 DB

CONTOUR PLOT OF AURORAL ABSORPTION
OCTOBER 1,1969 1545 UT

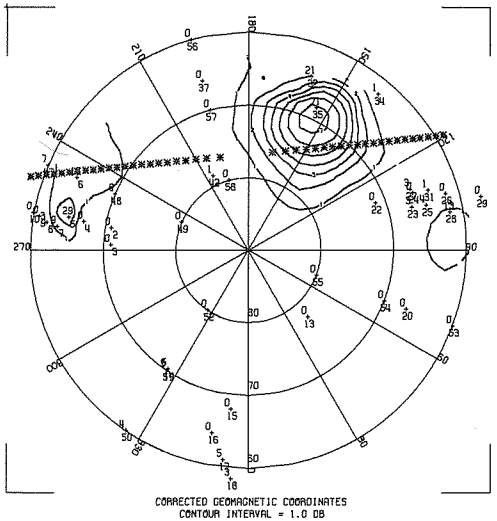

CORRECTED GEOMAGNETIC COORDINATES
CONTOUR INTERVAL = 1.0 DB

CONTOUR PLOT OF AURORAL ABSORPTION
OCTOBER 1,1969 1600 UT

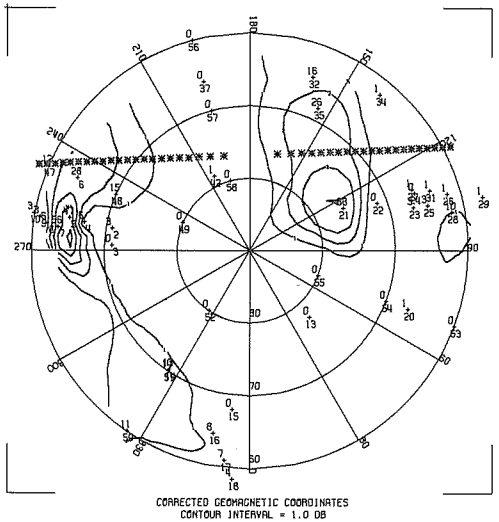

CORRECTED GEOMAGNETIC COORDINATES
CONTOUR INTERVAL = 1.0 DB

CONTOUR PLOT OF AURORAL ABSORPTION
OCTOBER 1,1969 1615 UT

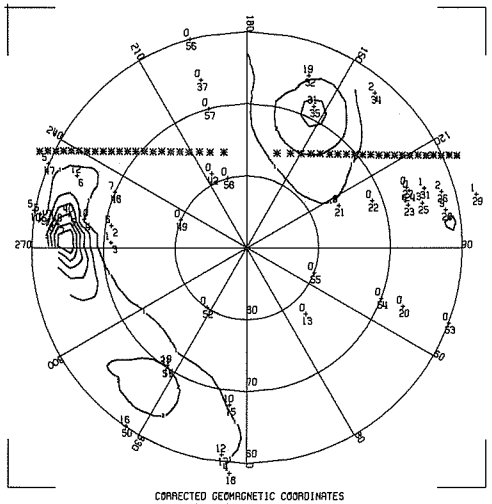

CORRECTED GEOMAGNETIC COORDINATES
CONTOUR INTERVAL = 1.0 DB

CONTOUR PLOT OF AURORAL ABSORPTION
OCTOBER 1,1969 1630 UT

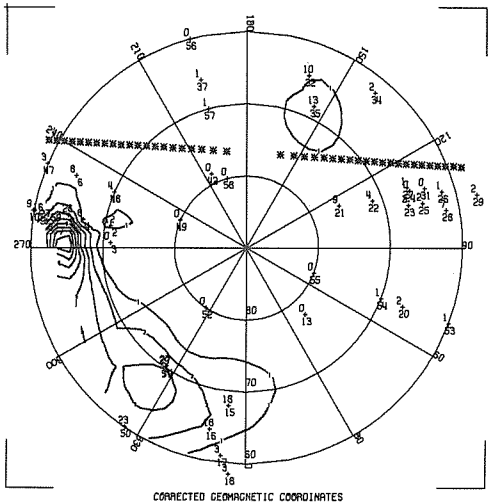

CORRECTED GEOMAGNETIC COORDINATES
CONTOUR INTERVAL = 1.0 DB

CONTOUR PLOT OF AURORAL ABSORPTION
OCTOBER 1,1969 1645 UT

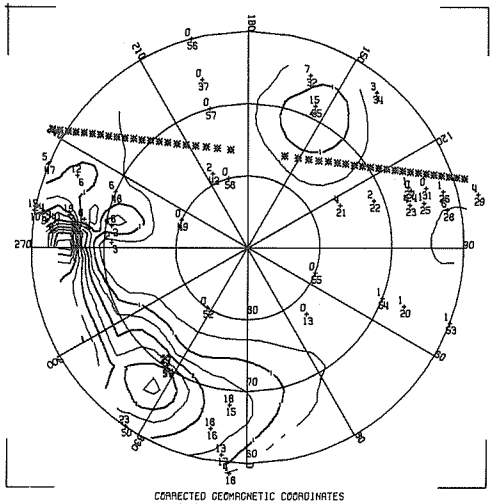

CORRECTED GEOMAGNETIC COORDINATES
CONTOUR INTERVAL = 0.5 DB

CONTOUR PLOT OF AURORAL ABSORPTION
OCTOBER 1,1969 1655 UT

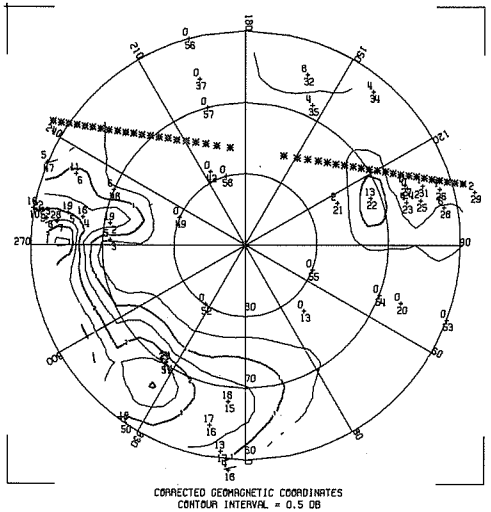

CORRECTED GEOMAGNETIC COORDINATES
CONTOUR INTERVAL = 0.5 DB

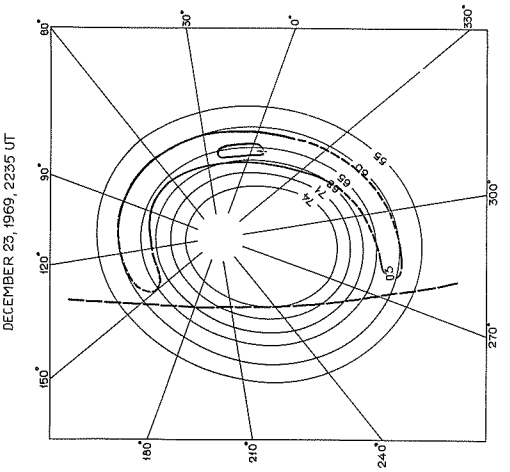
DECEMBER 23, 1969, 2235 UT
80°
30°
0°
330°
90°
300°
120°
270°
150°
180°
210°
240°
55
60
65
70
74
50

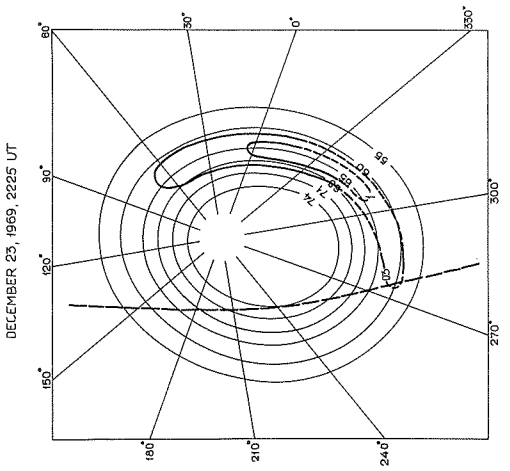
DECEMBER 23, 1969, 2225 UT
80°
30°
0°
330°
90°
300°
120°
270°
150°
180°
210°
240°
55
60
65
70
74
50

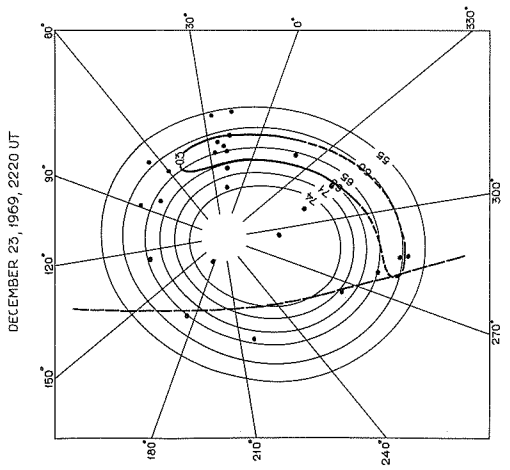
DECEMBER 23, 1969, 2220 UT
80°
30°
0°
330°
90°
300°
120°
270°
150°
180°
210°
240°
55
60
65
70
74
50

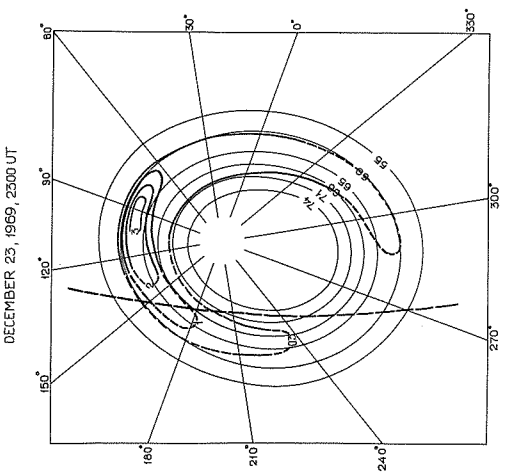
DECEMBER 23, 1969, 2300 UT
80°
30°
0°
330°
90°
300°
120°
270°
150°
180°
210°
240°
55
60
65
70
74
50

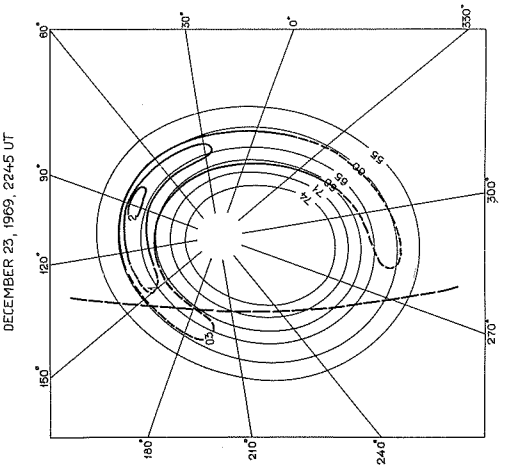
DECEMBER 23, 1969, 2245 UT
80°
30°
0°
330°
90°
300°
120°
270°
150°
180°
210°
240°
55
60
65
70
74
50

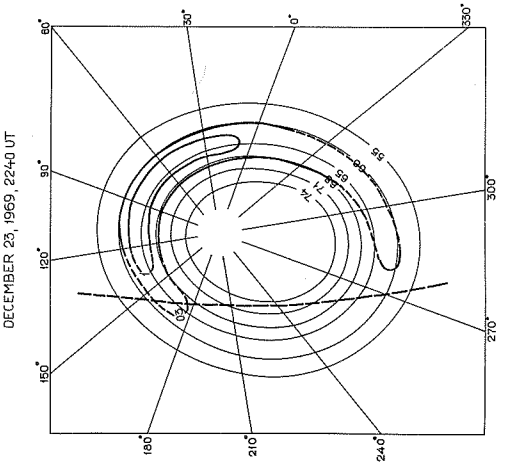
DECEMBER 23, 1969, 2240 UT
80°
30°
0°
330°
90°
300°
120°
270°
150°
180°
210°
240°
55
60
65
70
74
50

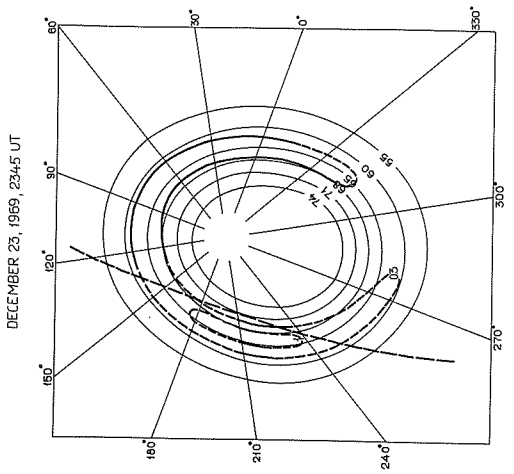
DECEMBER 23, 1969, 2345 UT

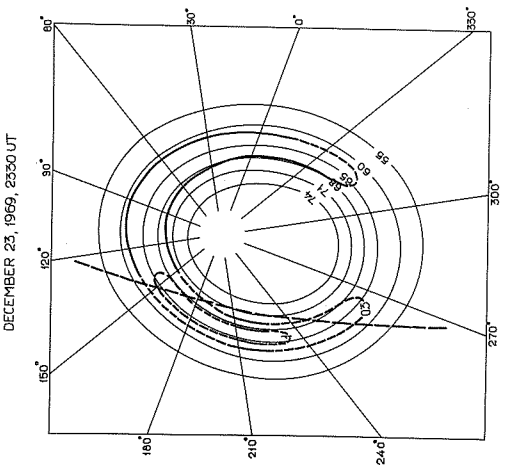
DECEMBER 23, 1969, 2330 UT

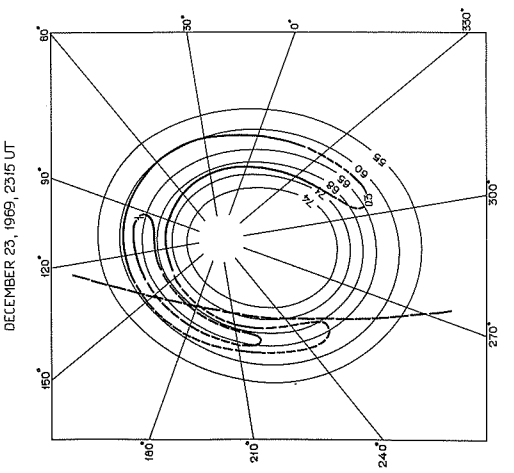
DECEMBER 23, 1969, 2315 UT

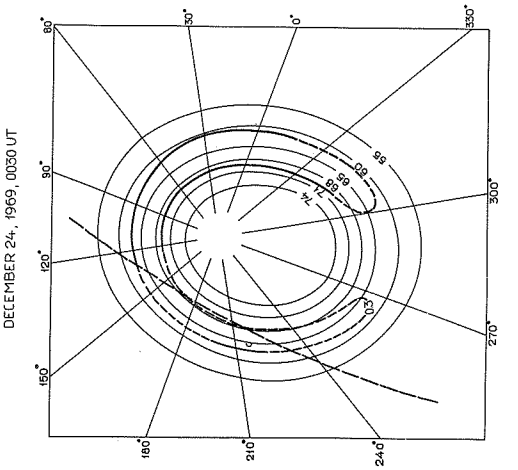
DECEMBER 24, 1969, 0030 UT

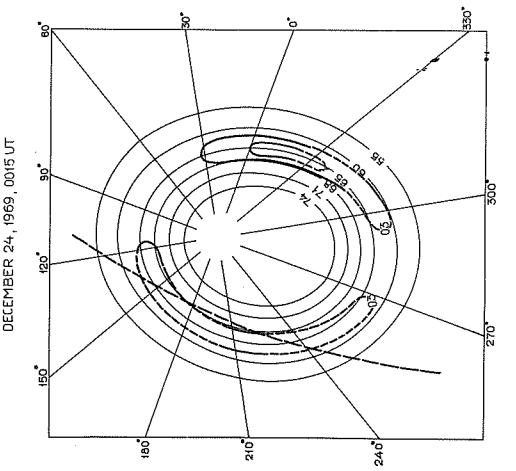
DECEMBER 24, 1969, 0015 UT

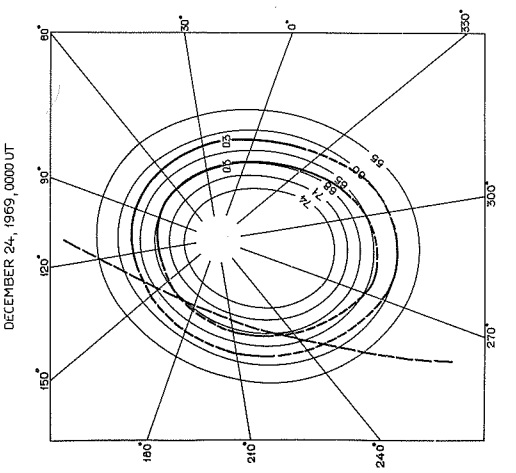
DECEMBER 24, 1969, 0000 UT

Publication Notice

WORLD DATA CENTER A - UPPER ATMOSPHERE GEOPHYSICS REPORT UAG
(Prepared by World Data Center A, Upper Atmosphere Geophysics, NOAA, Boulder, Colorado)

These reports are for sale through the Superintendent of Documents, Government Printing Office, Washington, D. C. 20402. Subscription price: $9.00 a year; $2.50 additional for foreign mailing; single copy price varies. These reports are issued on an irregular basis with 6 to 12 reports being issued each year. Therefore, in some years the single copy rate will be less than the subscription price, and in some years the single copy rate will be more than the subscription price. Checks and money orders should be made payable to the Superintendent of Documents.

Upper Atmosphere Geophysics Report UAG-1, "IQSY Night Airglow Data" by L. L. Smith, F. E. Roach and J. M. McKennan of Aeronomy Laboratory, ESSA Research Laboratories, July 1968, single copy price $1.75. [Catalog No. C52.16/2:1]

Upper Atmosphere Geophysics Report UAG-2, "A Reevaluation of Solar Flares, 1964-1966" by Helen W. Dodson and E. Ruth Hedeman of McMath-Hulbert Observatory, The University of Michigan, August 1968, single copy price 30 cents. [Catalog No. C52.16/2:2]

Upper Atmosphere Geophysics Report UAG-3, "Observations of Jupiter's Sporadic Radio Emission in the Range 7.6-41 MHz, 6 July 1966 through 8 September 1968" by James W. Warwick and George A. Dulk, Department of Astro-Geophysics, University of Colorado, October 1968, single copy price 30 cents. [Catalog No. C52.16/2:3]

Upper Atmosphere Geophysics Report UAG-4, "Abbreviated Calendar Record 1966-1967" by J. Virginia Lincoln, Hope I. Leighton and Dorothy K. Kropp, Aeronomy and Space Data Center, Space Disturbances Laboratory, ESSA Research Laboratories, January 1969, single copy price $1.25. [Catalog No. C52.16/2:4]

Upper Atmosphere Geophysics Report UAG-5, "Data on Solar Event of May 23, 1967 and its Geophysical Effects" compiled by J. Virginia Lincoln, World Data Center A, Upper Atmosphere Geophysics, ESSA, February 1969, single copy price 65 cents. [Catalog No. C52.16/2:5]

Upper Atmosphere Geophysics Report UAG-6, "International Geophysical Calendars 1957-1969" by A. H. Shapley and J. Virginia Lincoln, ESSA Research Laboratories, March 1969, single copy price 30 cents. [Catalog No. C52.16/2:6]

Upper Atmosphere Geophysics Report UAG-7, "Observations of the Solar Electron Corona: February 1964-January 1968" by Richard T. Hansen, High Altitude Observatory, Boulder, Colorado and Kamuela, Hawaii, October 1969, single copy price 15 cents. [Catalog No. C52.16/2:7]

Upper Atmosphere Geophysics Report UAG-8, "Data on Solar Geophysical Activity October 24-November 6, 1968", Parts 1 and 2, compiled by J. Virginia Lincoln, World Data Center A, Upper Atmosphere Geophysics, ESSA, March 1970, single copy price (includes Parts 1 and 2) $1.75. Part 1 [Catalog No. C52.16/2:8/1], Part 2 [Catalog No. C52.16/2:8/2]

Upper Atmosphere Geophysics Report UAG-9, "Data on Cosmic Ray Event of November 18, 1968 and Associated Phenomena" compiled by J. Virginia Lincoln, World Data Center A, Upper Atmosphere Geophysics, ESSA, April 1970, single copy price 55 cents. [Catalog No. C52.16/2:9]

Upper Atmosphere Geophysics Report UAG-10, "Atlas of Ionograms" edited by A. H. Shapley, ESSA Research Laboratories, May 1970, single copy price $1.50. [Catalog No. C52.16/2:10]

Upper Atmosphere Geophysics Report UAG-11, "Catalogue of Data on Solar-Terrestrial Physics", compiled by J. Virginia Lincoln and H. Patricia Smith, World Data Center A, Upper Atmosphere Geophysics, ESSA, June 1970, single copy price $1.50. [Catalog No. C52.16/2:11]

Upper Atmosphere Geophysics Report UAG-12, "Solar-Geophysical Activity Associated with the Major Geomagnetic Storm of March 8, 1970", Parts 1, 2 and 3, compiled by J. Virginia Lincoln and Dale B. Bucknam, World Data Center A, Upper Atmosphere Geophysics, NOAA, April 1971, single copy price (includes Parts 1-3) $3.00. [Catalog No. C55.220:12/Pt 1, Pt 2, Pt 3]

Upper Atmosphere Geophysics Report UAG-13, "Data on the Solar Proton Event of November 2, 1969 through the Geomagnetic Storm of November 8-10, 1969", compiled by Dale B. Bucknam and J. Virginia Lincoln, World Data Center A, Upper Atmosphere Geophysics, NOAA, May 1971, single copy price 50 cents. [Catalog No. C55.220:13]

USCOMM-NOAA-ASHEVILLE-9-30-71--1100 U.A.G.

Upper Atmosphere Geophysics Report UAG-14, "An Experimental Comprehensive Flare Index and its Derivation for 'Major' Flares 1955-1969", by Helen W. Dodson and E. Ruth Hedeman, McMath-Hulbert Observatory, University of Michigan, July 1971, single copy price 30 cents. [Catalog No. C55.220:14]

Upper Atmosphere Geophysics Report UAG-15, "Catalogue of Data on Solar-Terrestrial Physics", prepared by Research Laboratories, NOAA, Boulder, Colorado, July 1971, single copy price $1.50. (Supersedes Report UAG-11, June 1970.) [Catalog No. C55.220:15]

Upper Atmosphere Geophysics Report UAG-16, "Temporal Development of the Geographical Distribution of Auroral Absorption for 30 Substorm Events in each of IQSY (1964-65) and IASY (1969)" by F. T. Berkey, V. M. Driatskiy, K. Henriksen, D. H. Jelly, T. I. Shchuka, A. Theander and J. Yliniemi, September 1971. [Catalog No. C55.220:16]