UNCLASSIFIED

AD NUMBER

AD874021

NEW LIMITATION CHANGE

TO

Approved for public release, distribution unlimited

FROM

Distribution authorized to U.S. Gov't. agencies only; Administrative/Operational Use; JUL 1970. Other requests shall be referred to Naval Facilities Engineering Command, Washington, DC 20350.

AUTHORITY

NFEC ltr, 13 Jul 1977

THIS PAGE IS UNCLASSIFIED

THIS REPORT HAS BEEN DELIMITED
AND CLEARED FOR PUBLIC RELEASE
UNDER DOD DIRECTIVE 5200.20 AND
NO RESTRICTIONS ARE IMPOSED UPON
ITS USE AND DISCLOSURE.

DISTRIBUTION STATEMENT A

APPROVED FOR PUBLIC RELEASE;
DISTRIBUTION UNLIMITED.

AD 874021

R 688

Technical Report

AQUANAUTS COMPOSITE LIFE SUPPORT UMBILICALS—SEALAB III

July 1970

DDC
RECEIVED
SEP 4 1970
B

AD No. ____
DDC FILE COPY

Sponsored by

NAVAL FACILITIES ENGINEERING COMMAND

NAVAL CIVIL ENGINEERING LABORATORY

Port Hueneme, California

Each transmittal of this document outside the agencies of the U. S. Government must have prior approval of the Naval Civil Engineering Laboratory.

14

AQUANAUTS COMPOSITE LIFE SUPPORT UMBILICALS—SEALAB III

Technical Report R-688

64-005

by

John J. Bayles and Douglas Taylor

ABSTRACT

The Naval Civil Engineering Laboratory (NCEL) awarded and monitored several contracts for aquanaut composite life support umbilicals and complementary equipment planned for use in the SEALAB III operation. Safety certification testing of the contract items was performed at the contractor's factories and at NCEL. The accepted items were observed in use during SEALAB III aquanaut training sessions and were evaluated as to their potential use in an actual operation. It became evident that there is a need for improvement in the reliability and durability of aquanaut umbilicals. Greater care in the handling and maintenance of life support equipments would result in improved performance.

ACCESSION for
CFSTI WHITE SECTION
DDC BUFF SECTION
UNANNOUNCED
JUSTIFICATION
BY
DISTRIBUTION/AVAILABILITY CODES
DIST. AVAIL. and/or SPECIAL
3

Each transmittal of this document outside the agencies of the U. S. Government must have prior approval of the Naval Civil Engineering Laboratory.

CONTENTS

page

INTRODUCTION 1

PRIMARY UMBILICALS 1

General Requirements 1

Contracts N00600-67-C-1180 and N62399-67-C-0035..... 2

Composite Umbilical Description 3

Cabling and Gas Hose (Contract N00600-67-C-1180) (EDU) 3

Electrical Connectors (Contract N62399-67-C-0035) . 7

Testing Requirements 7

Test Results 9

Conclusions 16

Second Generation Primary Umbilicals (Contract N62399-69-C-0031) 16

Purpose 16

Description 17

Contract Testing Requirements 19

NCEL Testing 20

Test Results 20

Conclusions 21

Future Plans 22

Modified Second Generation Primary Umbilicals (Contract N62399-69-C-0032) 22

Purpose 22

Description 23

Contract Testing Requirements 24

NCEL Testing 24

page

Test Results 24

Conclusions 24

Future Plans 25

DIVER'S BACKPACK LIFE SUPPORT EQUIPMENT CONNECTOR ELECTRICAL HARNESS 25

Discussion 25

Contract N62399-67-C-0035, Item 1 25

Description 25

Contract Test Requirements 26

NCEL Test Setup and Equipment List 26

NCEL Test Procedure 28

Test Results and Analysis 29

Conclusions 32

Recommendation 33

DIVER'S SECONDARY ELECTRICAL LIFE SUPPORT EQUIPMENT UMBILICAL CABLE 33

General Requirements 33

Contracts N62399-68-C-0011 and N62399-68-C-0014 33

Description 34

Contract Test Requirements 36

NCEL Tests 36

Test Results and Analysis 36

Conclusions 38

Future Plans 39

Recommendations 39

UMBILICAL GAS HOSES 39

Discussion 39

Description 40

page

Test Requirements 40

Test Setup and Equipment 42

Test Procedure 42

Test Results and Analysis 42

Examination 42

Proof Pressure Test 43

Operational Test—Quick-Disconnects 45

Conclusions 45

Recommendation 45

SUMMARY 45

Discussion 45

General Observations 46

General Conclusions 47

General Recommendations 48

APPENDIXES

A - SEALAB III—Atmospheric Contamination Bill 49

B - SEALAB III—Aquanaut Safety Certification Program Procedure 202C - Umbilical Cord and Diver's Electrical Harness Assembly 53

C - SEALAB III—Aquanaut Safety Certification Program Procedure 201A - Umbilical Cord and Fittings 60

D - Permeability Rates of Certain Gases Through Membranes of Certain Polymers 65

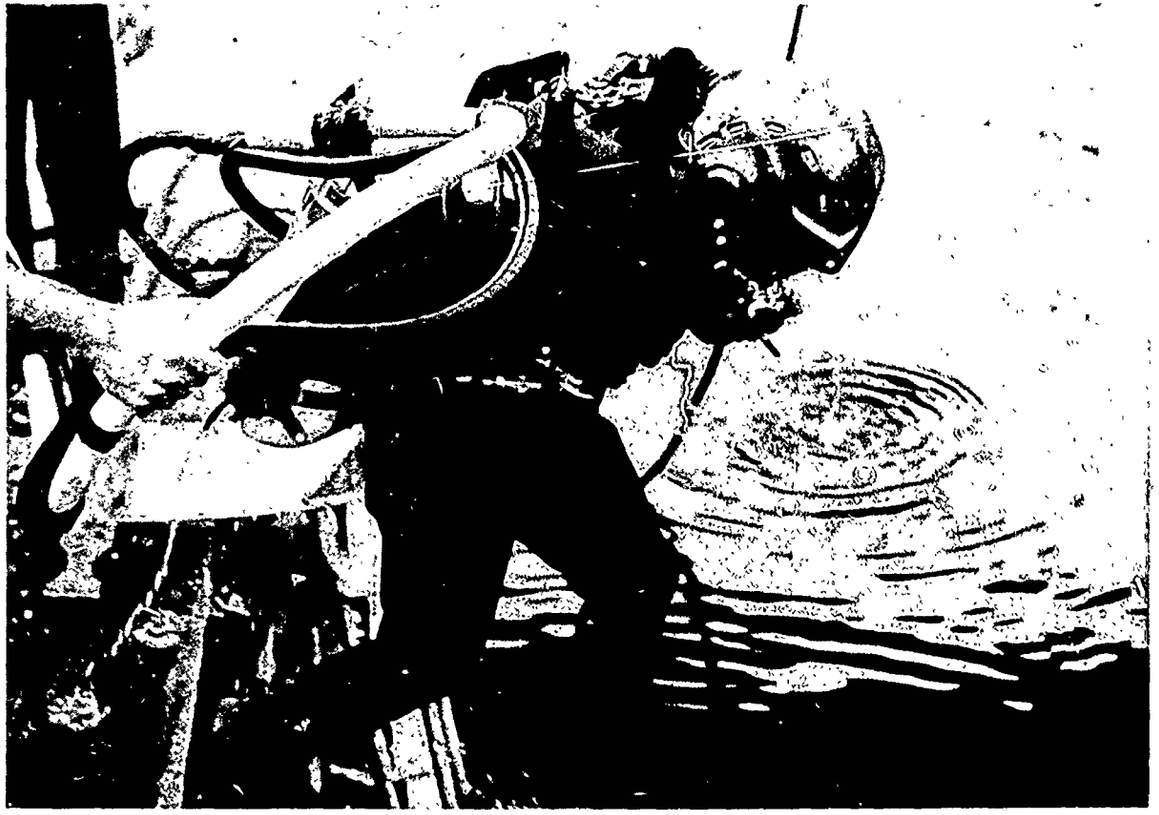

SEALAB III diver during maneuverability tests.

INTRODUCTION

This report summarizes the work performed under several NCEL contracts for the fabrication of diver's life support umbilical cables, harnesses, gas hose, and auxiliary fittings, which had been planned for use in SEALAB III. The contracts were as follows:

1. Contract N00600-67-C-1180, Samuel Moore and Company, Umbilical Cabling; and Contract N62399-67-C-0035, Electro Oceanics, Inc., Primary Umbilical Cable Connectors.

2. Contract N62399-69-C-0031, Samuel Moore and Company, Primary Umbilical Cables with Electro Oceanics Connectors.

3. Contract N62399-69-C-0032, Samuel Moore and Company, Primary Umbilical Cables with D. G. O'Brien Connectors.

4. Contract N62399-68-C-0011, Samuel Moore and Company, Secondary Umbilical Cables for SEALAB III; and Contract N62399-68-C-0014, Electro Oceanics, Inc., Secondary Umbilical Cable Connectors for SEALAB III.

The report includes descriptions of the umbilicals and associated parts, their intended use, how they were tested, the net results of the tests, and problems that developed in the field during use of the equipment in SEALAB III diver training.

In the development of the equipment items, consideration was given to minimization of toxicity hazards of all materials that had been planned for introduction into the SEALAB III atmosphere, as required by the provisions in Appendix A.

PRIMARY UMBILICALS

General Requirements

With the advent of advanced breathing-gas technology, making it feasible for divers to conduct useful work at water depths far beyond the capability of scuba or "hard hat" divers, parallel requirements arose for the development of suitable equipments to maximize diver capabilities.

The older methods, wherein divers lived at normal atmospheric conditions and required pressurization and decompression time for each deep dive, became prohibitively costly as working depths increased. Further, the methods used were extremely inefficient considering effective diver bottom time in relation to overall dive time. As dive depths increased, the volume of gas required by the diver, at standard conditions, also increased. At the deeper reaches, the diver could not physically carry a sufficient gas supply to provide for significant bottom time. At these depths, breathing gas supplied through an umbilical hose became imperative.

In the deeper water, where the ambient temperature is in the 40 to $50^{o}F$ range, the divers use HeO_2 mixed breathing gas to prevent nitrogen narcosis. Unfortunately, use of this gas accelerates transfer of the diver's body heat to the sea and the diver would soon succumb to the environmental exposure unless provided with supplementary heat. One means of providing this heat to the diver is by conversion of electric power supplied by an umbilical.

The necessity for improved communications is constantly demonstrated in diving operations. This need can best be satisfied at present by an umbilical wire or telephonic communication system.

Monitoring instrumentation that provides both data for research and a constant indication of the well-being of the diver is highly desirable and in some cases an absolute necessity. When the diver is utilizing a closed- or semiclosed-circuit breathing apparatus, the oxygen partial pressure (pO_2) should be monitored constantly by a sensor to prevent casualty in the event of oxygen buildup or depletion.

The equipment concept proposed for the SEALAB III Man-in-the-Sea program included use of diver's umbilicals incorporating all of the above mentioned capabilities. The aquanaut umbilicals were termed "composite life support umbilicals."

Contracts N00600-67-C-1180 and N62399-67-C-0035

The Officer in Charge, U.S. Navy Experimental Diving Unit (EDU), Washington, D. C., entered a contract (N00600-67-C-1180) with Samuel Moore and Company, Mantua, Ohio, to obtain seventeen 200-foot and three 600-foot-long composite umbilicals without electrical connectors. A separate contract (N62399-67-C-0035) awarded by NCEL to Electro Oceanics, Inc. (EO), Compton, California, provided for the installation of required electrical connectors on the umbilical cables.

Composite Umbilical Description

Cabling and Gas Hose (Contract N00600-67-C-1180) (EDU). Each composite umbilical (Figure 1) included the following components:

1. A 1/4-inch-ID breathing-gas hose of flexible, nonhygroscopic nylon, reinforced with a minimum of two Dacron braids, and a pure extruded polyurethane sheath, with a minimum 12,000-psi burst pressure rating. End fittings were 1/4-inch NPT of 316 stainless steel.

2. Conductors to provide power to diver heating devices and to the diver's light. The 200-foot-long units had six conductors and the 600-foot-long units had ten conductors of 10-gage, 19-strand copper, polyvinyl chloride (PVC) insulated, rated for 600 volts at 60°C.

3. A composite cable group for diver communications composed of two pairs of 18-gage, 7-strand copper wires insulated with a 15-mil thickness of 90°C PVC. Each pair of wires was color coded black and white, twisted with a 20-gage, 7-strand bare copper drain wire, with an aluminum-mylar tape helically wrapped with a 25% overlap (mylar side out) and in continuous contact with the copper drain wire. Each pair was sheathed with a 20-mil-thick, 80°C PVC shrink tubing. The two pairs were cabled with a 16-gage, 7-strand copper conductor insulated with a 15-mil thickness of 90°C PVC. This cable was shielded overall with an aluminum-mylar tape (aluminum side out) with 25% overlap and a 20-gage, 7-strand copper drain wire in continuous contact with the aluminum shield. The cable was sheathed overall with a 45-mil-thick, 80°C PVC shrink tubing.

4. Two pairs of 18-gage, 7-strand copper wires each with a 15-mil thickness of 90°C PVC, color coded black and white and twisted with a 20-gage, 7-strand bare copper drain wire which were required for the oxygen partial pressure sensor. Each pair was helically wrapped with aluminum-mylar tape with a 25% overlap (mylar side out) and in continuous contact with the copper drain wire. Each pair was sheathed with a 20-mil thickness of 80°C PVC shrink tubing.

All of the components (Figure 2) were cabled to an 18-inch lay, wrapped with a mylar barrier tape, and jacketed with a 0.090 to 0.100-inch-thick special water resistant polyurethane jacket, bright yellow in color.

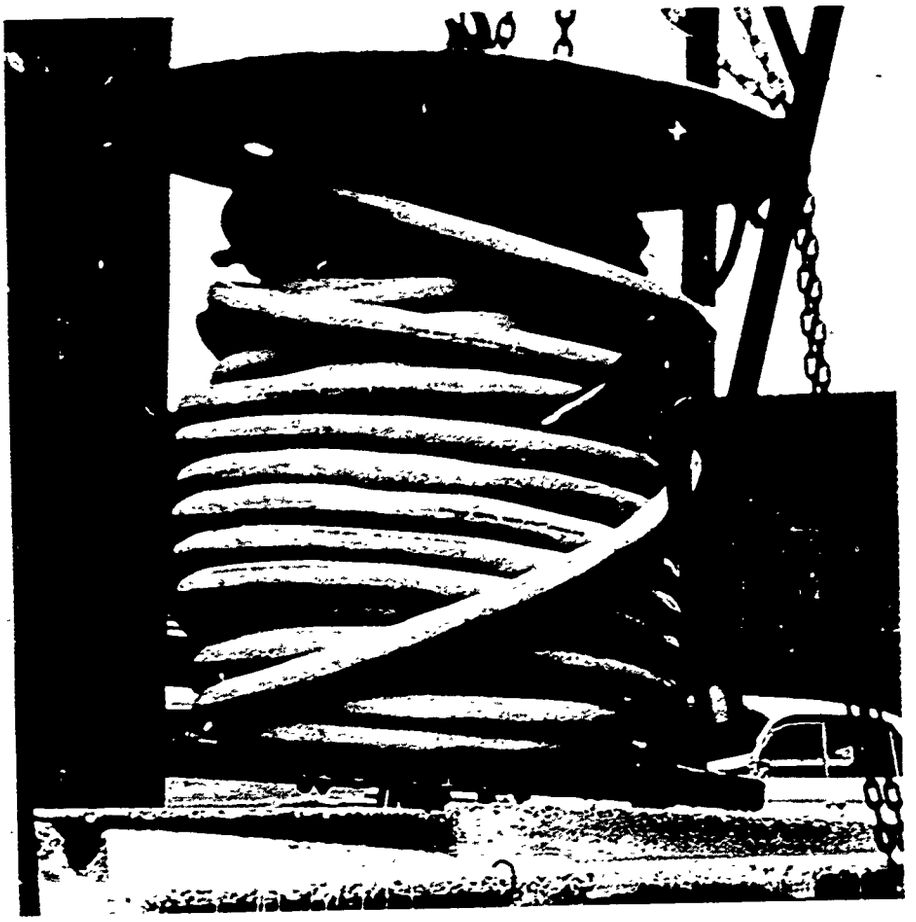

Figure 1. Composite life support umbilical (primary).

The contract called for the ends of the wiring bundles to be encapsulated to prevent salt water intrusion into the bundles at hydrostatic pressures equivalent to a 1,000-foot ocean depth.

The breakout for the gas hose was separate, with the electrical conductors sheathed together using a neoprene jacket. The length from the breakout to the end of the sheathed conductors was 3 feet. Breakout details were the same at both ends of the umbilical. The breakouts were encapsulated as shown in Figure 3.

The composite umbilical was circular in cross section with a maximum outside diameter of 1.85 inches for the 600-foot units, which had the greater number of conductors, and 1.5 inches for the 200-foot units. An 11-inch minimum bend radius was required by the contract. Any voids were filled with polystyrene stranded materials to enhance buoyancy.

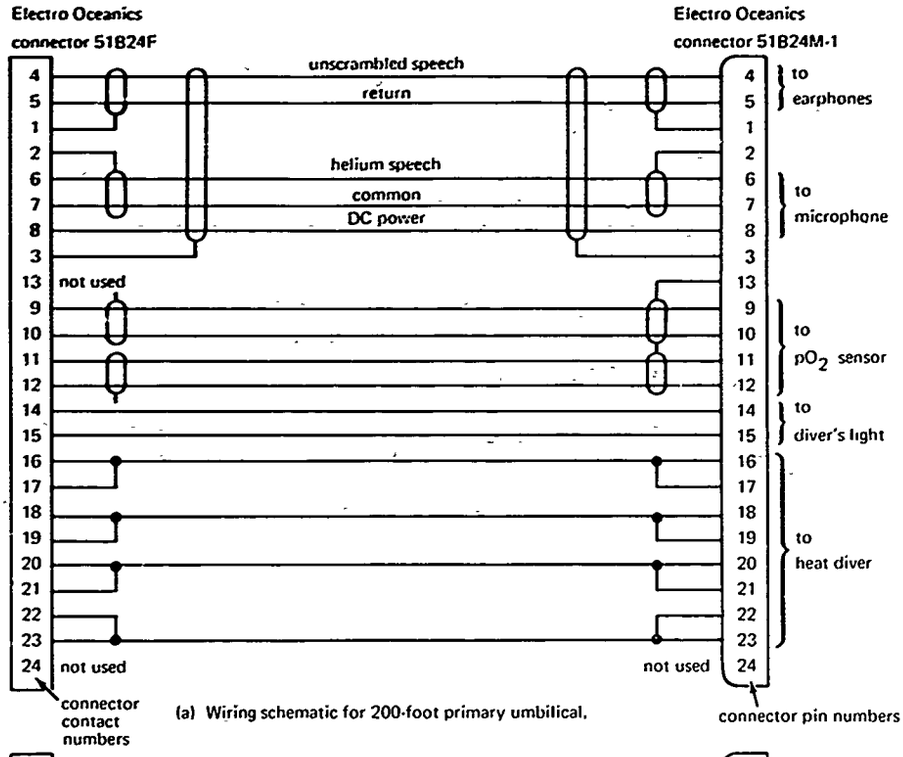

(a) Wiring schematic for 200-foot primary umbilical.

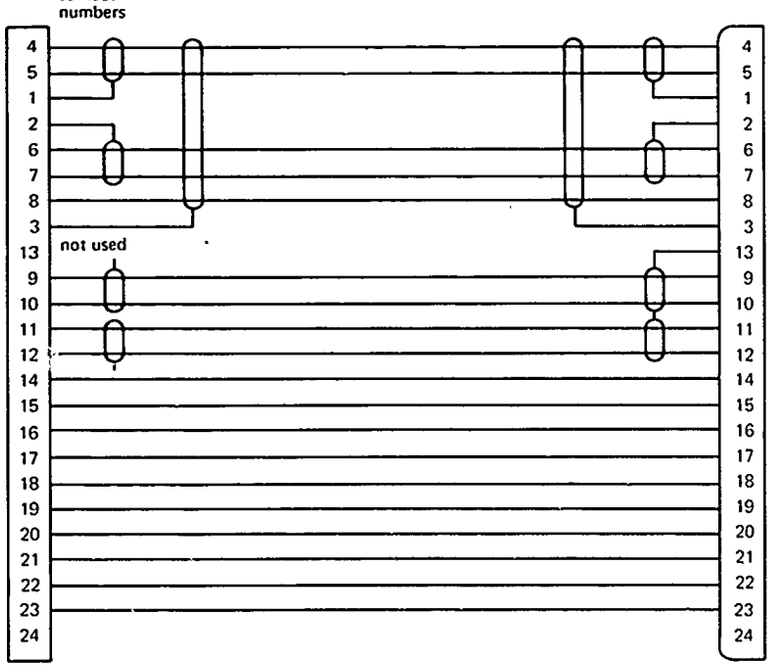

(b) Wiring schematic variance for 600-foot primary umbilical.

Figure 2. Umbilical schematic (primary).

Figure 3. Encapsulation of gas hose and electrical conductor breakout.

The contract also specified an umbilical weighing 4 ± 3 pounds negative per 100 feet in salt water, with a gas composition of 92% helium and 8% oxygen in the hose. (Note that no depth was specified.)

Umbilical Test Requirements. The original contract did not require electrical tests of the umbilical but was later modified to include:

1. A dielectric test to be performed in accordance with MIL-STD 202C, Method 301. For test performance, the umbilical was to be placed in a suitable bath of conductive water. Water conductivity was to be assured by the addition of at least 5% sodium chloride by weight. A test voltage of 1,060 to 1,110 volts rms (1,000 plus 2 times rated service voltage) was to be applied between each conductor and each of the other conductors, and between all conductors connected together and a copper rod in the water, for a period of 1 minute. The test voltage was to be raised from zero to maximum (1,060 to 1,110 rms) at a rate of 500 volts per second.

2. Insulation resistance was to be measured at 500 volts with resulting readings of no less than 100 megohms. The resistance was to be measured between each conductor and each of the other conductors and between all conductors connected together and the copper rod. The electrification time specified for each measurement was 1 minute.

3. Dielectric and insulation resistance tests between cable or wire shields were prohibited. The testing was to be performed between shields connected together and all conductors and the copper rod.

Electrical Connectors (Contract N62399-67-C-0035). The government provided the umbilical cables fabricated by Samuel Moore and Company, to Electro Oceanics, Inc. The contract with EO called for wiring and molding one EO number 51B24F connector (threaded to receive a locking sleeve) to one end of each composite umbilical cable and one EO number 51B24M connector, with locking sleeve, to the other cable end (Figure 1). Wiring was to be in accordance with Deep Submergence System Project (DSSP) drawing 800-2654257 and Revision A, and as shown in Figure 2.

Contract requirements included sufficient connector reliability to withstand an ocean environment at a depth of 1,000 feet for a period of 1 year. All mating electrical connector contacts were to be brass (conforming to Federal Specification QQ-B-626C) with a minimum 0.0002-inch thickness of gold plating conforming to MIL-G-45204A, Type II, Class III. Allowed tolerances required interchangeability between all male and female connectors with the same function.

Testing Requirements. The Deep Submergence Systems Project Office authorized Northrop Nortronics to develop and issue the safety certification test procedures for all the SEALAB III aquanaut equipment. The procedures had not been issued when the original contract with Electro Oceanics, Inc. was awarded. However, an early contract revision required all umbilicals to be high potential tested after installation of the connectors, in accordance with MIL-STD-202, Method 301, at sea level and at 1,000 volts. High potential testing was required between power carrying leads and each of the other leads and between adjacent pins on the connectors. Insulation tests were also required to be made at 500 volts, with resulting readings to be no less than 100 megohms.

A later contract modification required electrical testing to be conducted in accordance with Northrop Nortronics SEALAB III Aquanaut Safety Certification Program Procedure 202, Revision C, as amended (see Appendix B).

Certification of dielectric and insulation resistance testing for the government furnished items was provided by Samuel Moore and Company, the umbilical cable fabricator.

Originally, no testing was required to be accomplished at NCEL following delivery of umbilicals by the contractor. As in-service training by the aquanauts progressed, certain umbilical failures occurred. As a result:

1. Flex testing was initiated and is discussed later in this report. Equipment for conducting these tests is shown in Figure 4.

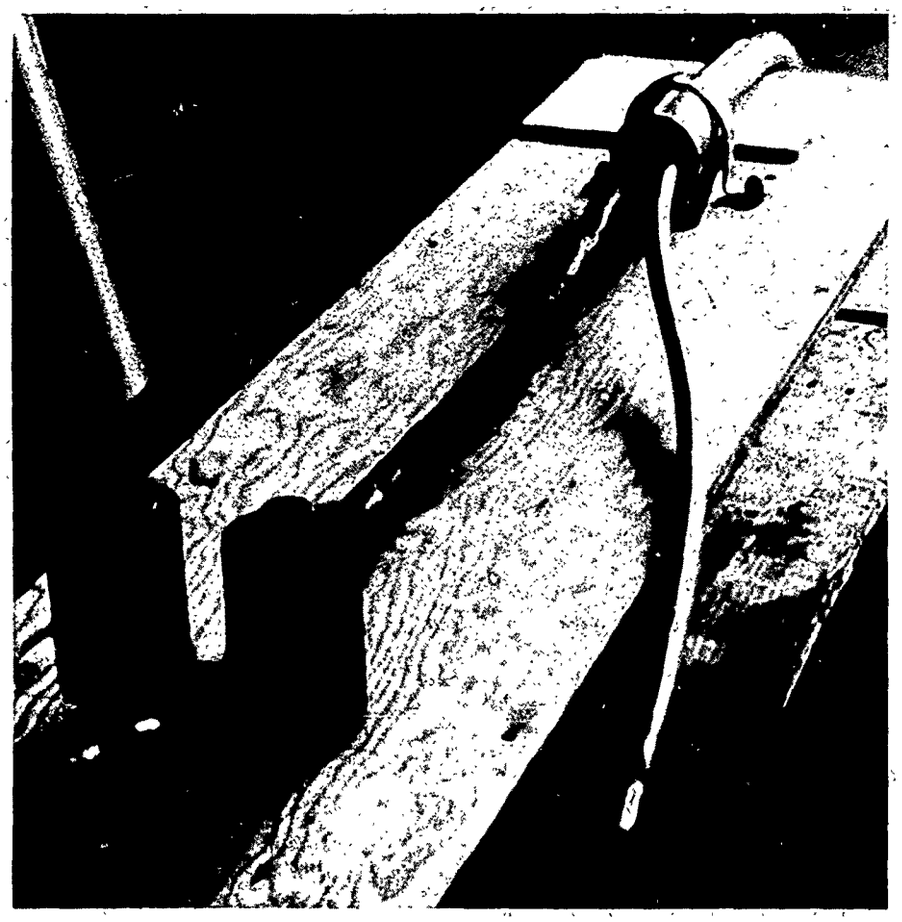

Figure 4. Flex testing of umbilical.

2. Electrical insulation resistance tests were required to be conducted, followed by hydrostatic pressure testing to 300 psig, then an immediate repeat of the insulation resistance testing. Measurements were made at 500 volts; readings were required to be a minimum of 100 megohms. Electrification time for each measurement was 1 minute. Tests between cable or wire shields were prohibited. The test arrangement is shown in Figure 5.

During inspection of the cable assemblies after delivery by Samuel Moore and Company, it was discovered that several assemblies had separations at the breakout encapsulation between the electrical wiring neoprene jacket and the polyurethane encapsulation (Figure 6). The EDU contracting officer was apprised of this deficiency and in consultation with the government inspector arranged for Samuel Moore and Company to repair the defective encapsulations at the Electro Oceanics factory.

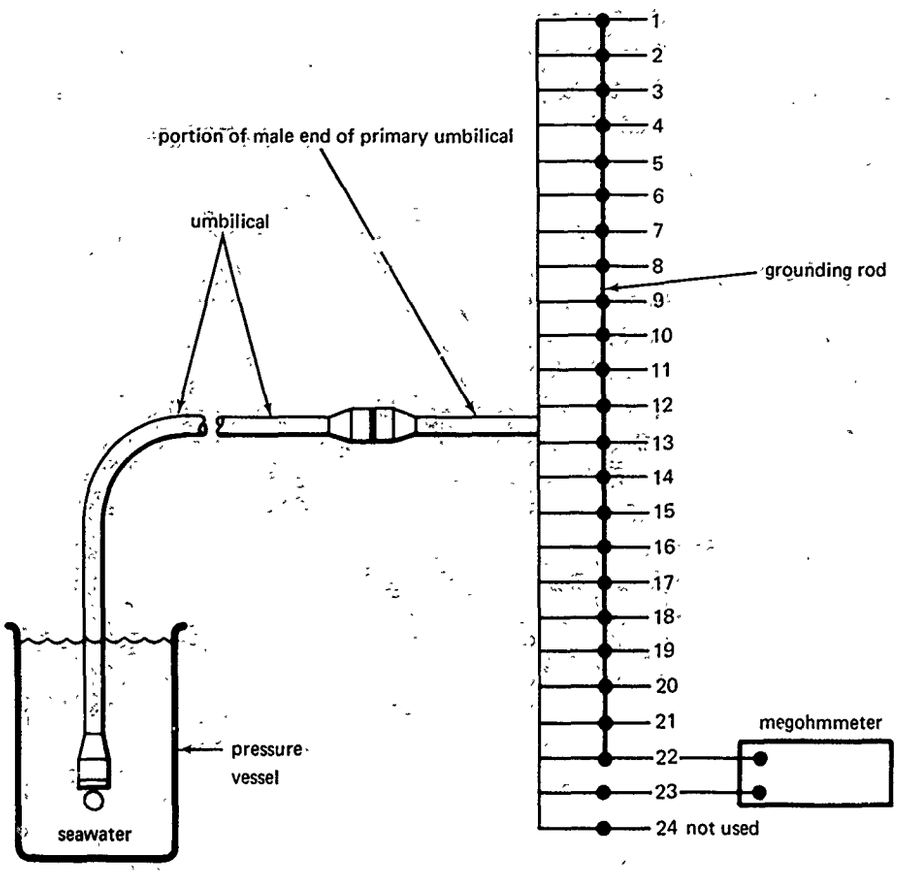

Figure 5. Test arrangement for electrical resistance measurement.

Test Results. In April 1968, one umbilical (complete with electrical connectors) was forwarded to EDU for use by divers during training for 600-foot saturation dives. During the ensuing training preparation and dives, it was reported that:

1. The number 4 conductor did not register continuity with the mating conductor in the diver's backpack electrical harness (see the report section on backpack harnesses for a description of this item). An undersize connector pin was determined to be the cause. When the contact was somewhat flattened, continuity was restored.

2. The pO_2 sensor meter reacted erratically. Poor connector contact was thought to be the cause.

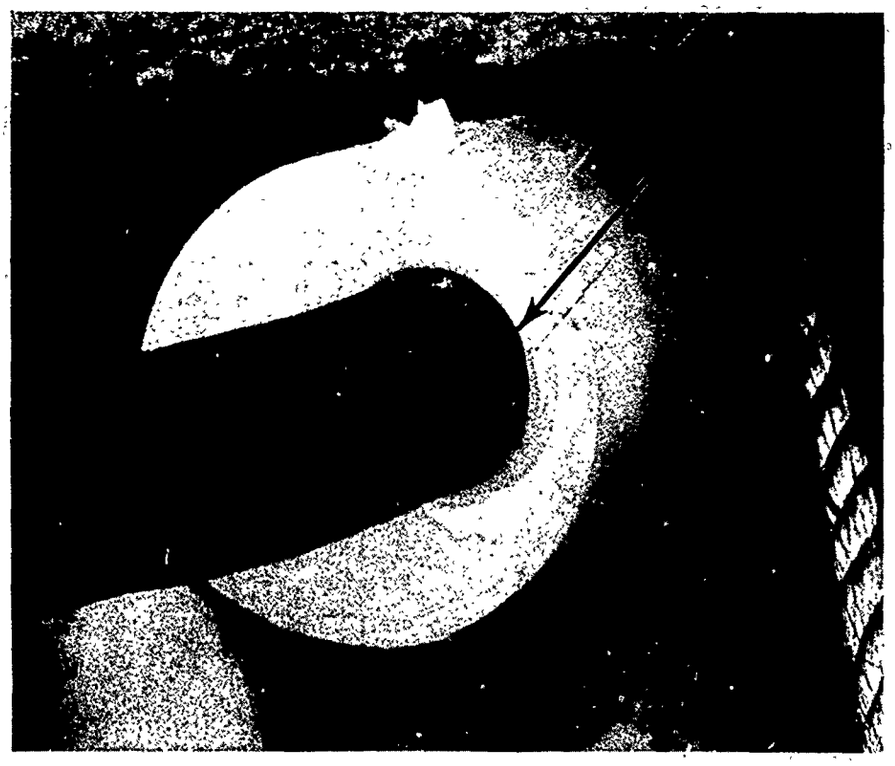

Figure 6. Separation of bonding at encapsulation.

3. The umbilical gained an in-water weight of 25 pounds (doubling the original weight) at a hydrostatic pressure of 20 atmospheres.

4. Upon return to a 1 atmosphere pressure, the umbilical regained only 18 pounds of buoyant effect, tending to indicate either (1) permanent deformation or (2) water intrusion into the umbilical. Later findings indicate recovery from deformation was slow.

In May 1968, during diver training at San Diego, California, two umbilicals failed, apparently at the diver's end. Representatives of NCEL, Electro Oceanics, Inc., Samuel Moore and Company, and the Deep Submergence Systems Project Technical Office (DSSPTO) studied these failures and found that they occurred within the area encompassing the Electro Oceanics connector molding (Figure 7). It was also determined that:

1. Because the connector molding material was polyurethane and the breakout sheaths were neoprene, EO had experienced molding difficulties and had changed the mold design midway in the contract work.

Therefore, each umbilical cable could have two differently molded connectors, since no record was kept and molding the two ends did not necessarily follow consecutively.

2. Probing of the molded connector ends revealed air pockets in the polyurethane molding.

3. In some instances the connector mold fit snugly, in others it was loose. Subsequently, EO found up to 1/16-inch difference in the diameters of breakout bundles.

4. The neoprene sheath on the damaged end of one of the umbilicals appeared to have been cut too short for it to be fully included in the molded connector end. It was felt that this, plus short radius bending of the breakout during use, caused failure of this umbilical in less than 1 hour. Photographs of the diver operations recorded the short radius flexing of the breakouts at the diver end (Figure 8).

5. The neoprene sheathing material was notch sensitive and could be easily torn longitudinally once a tear was started.

Electro Oceanics proposed remolding with a cover the full length of the breakout to forestall future failures. To do this, it was suggested that the neoprene sheathing be cut back to within 6 inches of the breakout encapsulation. The polystyrene stranded materials were also to be cut back, but to random lengths. The breakout was then to be wrapped with mylar tape and the breakout, including a portion of the connector, was to be covered by molding on a 1/4-inch thickness of PVC.

Two other methods were suggested to solve the breakout problem. The first involved wrapping the breakout and connector with rubber tape. The second method would provide a helical spring of metal or plastic to fit over the breakout sheath to limit the bending radius.

One umbilical was modified using the rubber tape method. It was exercised by divers for 1 hour with apparent good results. Later on, the tape abraided severely during handling on the concrete pier where the divers trained. The helical spring method was rejected.

In June 1968, EO attempted field repair of all subsurface air pocket defects in connector moldings by applying polyurethane patches after grinding out suspect materials. These patches did not hold. EO suggested returning the umbilicals to the factory for repair by molding. This could not be done immediately because the umbilicals were urgently needed in San Francisco for diver training. Figure 9 shows umbilicals installed on the habitat at San Francisco.

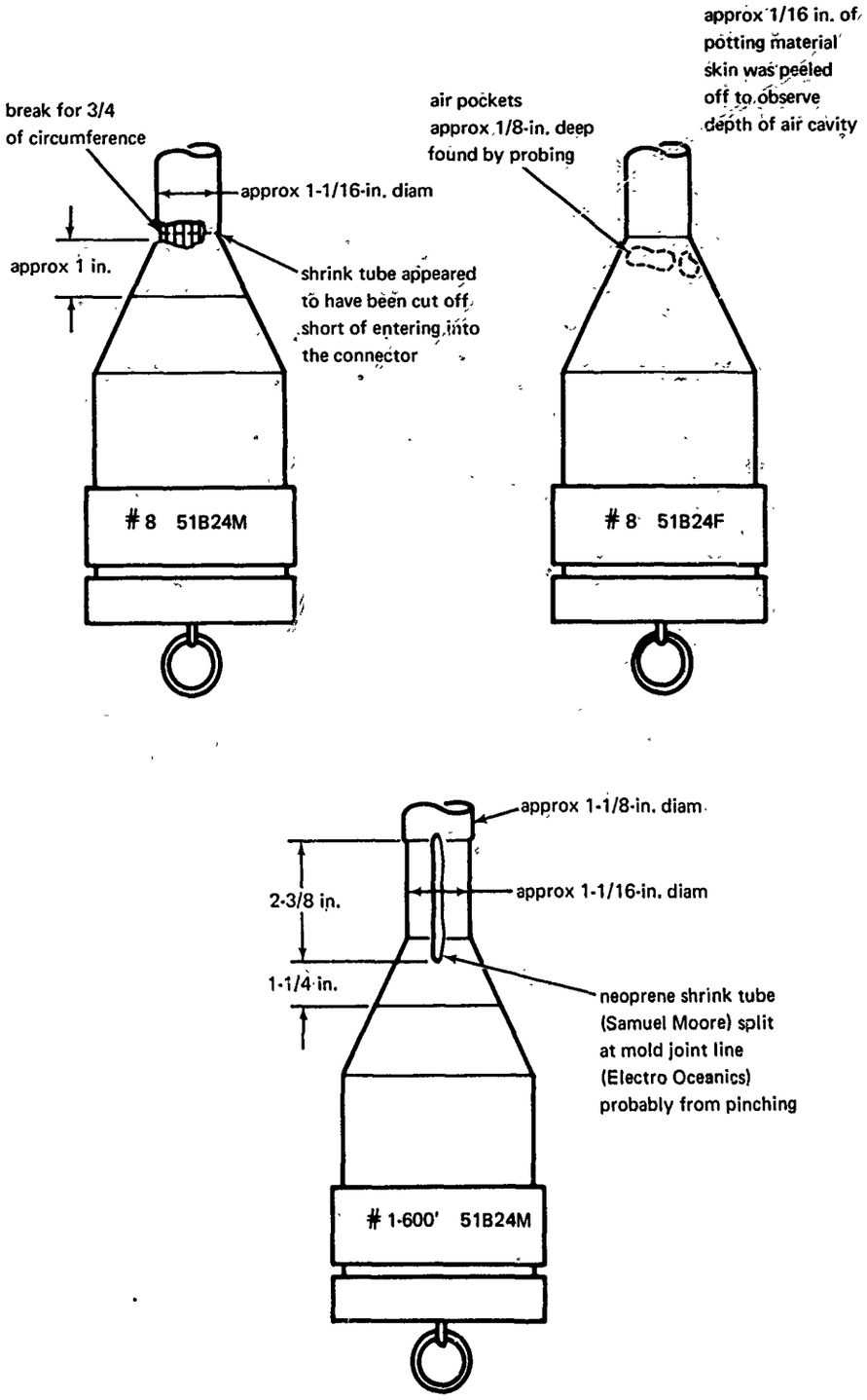

Figure 7. Umbilical failures as observed in May 1968.

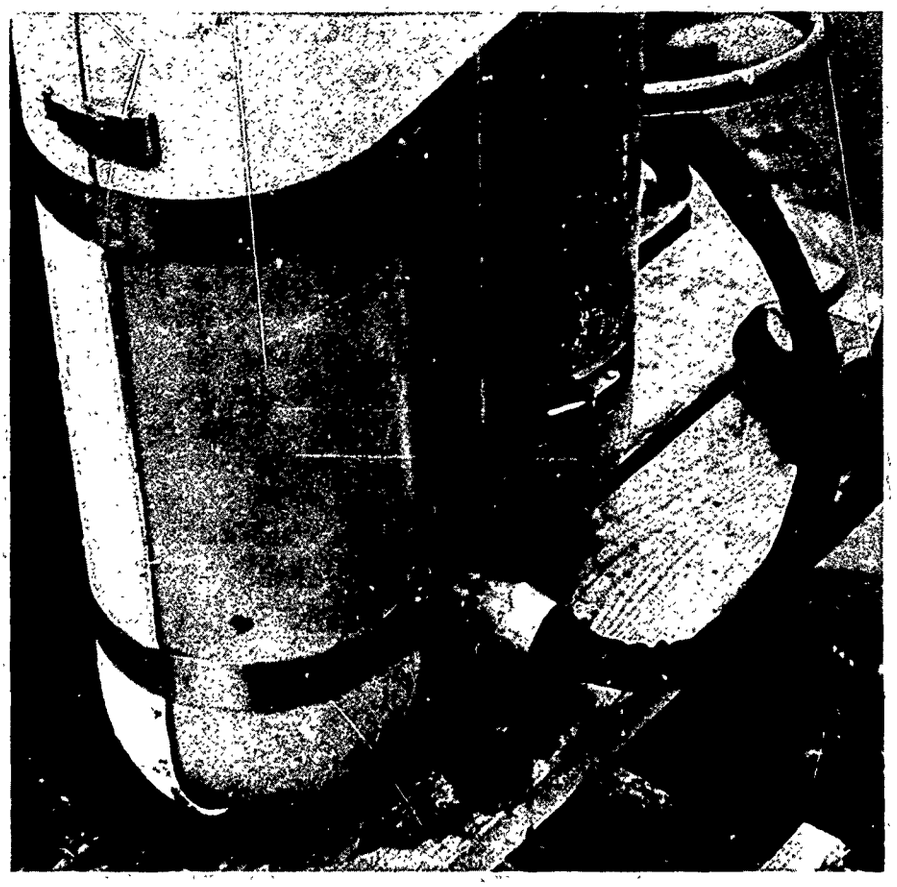

Figure 8. Short radius bending of umbilical during diver use.

Because of the problems discovered at San Diego, attempts were made to develop an X-ray technique for uncovering problem areas. These efforts were unsuccessful, and a requirement for flex testing the breakouts at the connector was initiated at the request of DSSP. These flex tests were to be conducted in accordance with MIL-C-24217, paragraph 4.7.5. The test procedure was as follows:

A wired and molded plug assembly was loosely inserted between a pair of rollers (see Figure 10). The bonded joint between the boot and cable jacket was located approximately at the intersection of the 45-degree lines through the centers of the two rollers. The lower end of the specimen was firmly clamped by a clamp designed to apply uniform radial pressure to the core of the cable. The diameter of the rollers was 3 inches. The assembly was subjected to 90-degree bending in each direction at a rate of 12 to 14

complete cycles, 360 degrees total travel per minute. The cable was then rotated inside the clamp 90 degrees and the test was repeated. A complete test consisted of two tests of 100 cycles each.

Flex tests were performed on one umbilical and resulted in loss of continuity in nine circuits in the male connector. Tests of the female connector resulted in loss of continuity in ten of the remaining circuits. As a result, these connectors were dissected to determine the exact causes of failure. Some wires were broken while others had pulled free from the solder pots in the connectors.

In July 1968, NCEL personnel were called to San Francisco because of problems with the umbilicals. One was suspected of having water intrusion because it had low readings during insulation resistance tests. Periodic checks indicated that the umbilical was drying out. Numerous intermittent electrical failures indicated problems with connector contacts. EO personnel were called in to correct these deficiencies. This was accomplished by size checking and slightly flattening oversized female contacts with a special tool.

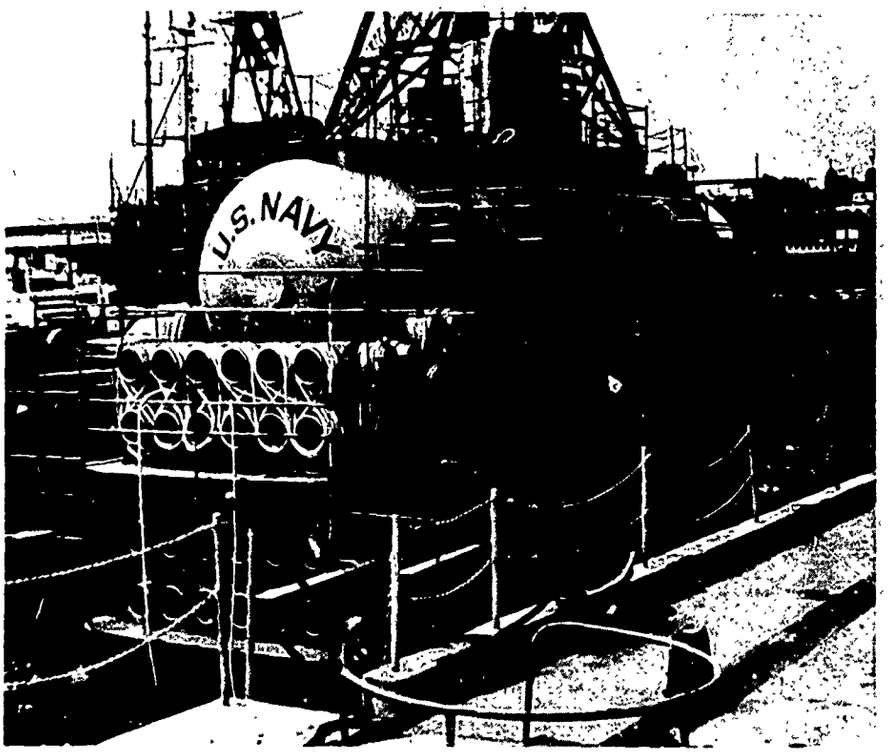

Figure 9. Umbilicals installed on SEALAB III.

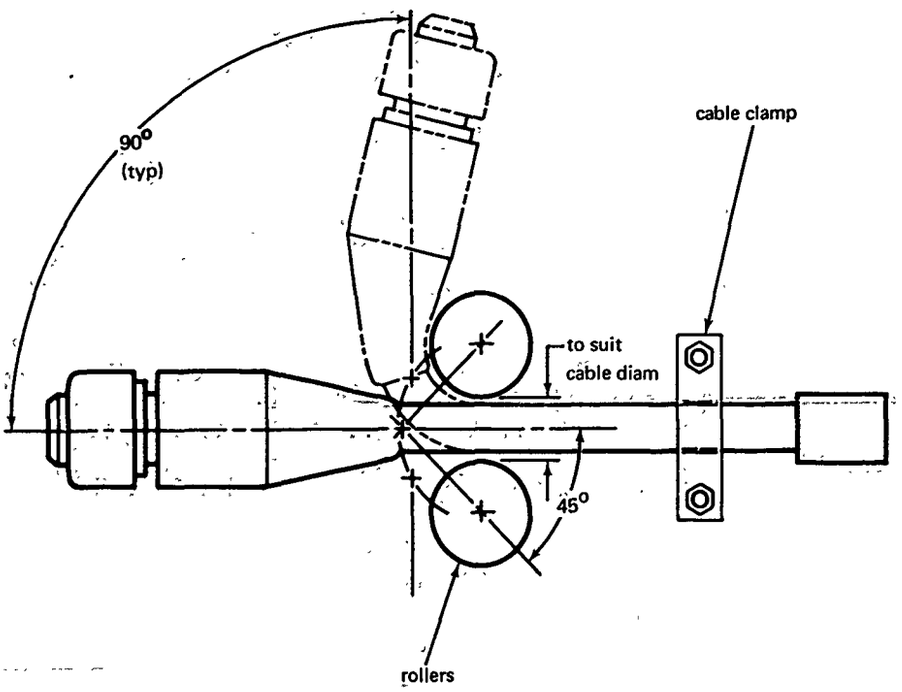

Figure 10. Cable flexing test setup.

Because of the failures indicated at San Diego and San Francisco, DSSP directed that all umbilicals and harnesses would be required to undergo hydrostatic pressure tests, with electrical resistance tests to be conducted both before and after.

A decision was made to follow the early suggestion of EO for remolding the entire breakout to a larger diameter, but with neoprene, plus the added precaution of wrapping the external surface with a Dacron woven fabric cemented in place with liquid neoprene. This modification was to be performed by Samuel Moore and Company as a means of resolving the problems encountered in the diver's end of the umbilical breakouts. At the same time, Northrop Nortronics was engaged to prepare a more realistic flex test since the original contract had called for a minimum 11-inch bend radius.

Eight umbilicals were remolded according to the plan outlined above. The required electrical resistance and hydrostatic pressure tests were performed. Several umbilicals failed the resistance tests following pressurization. The umbilicals were then flex tested and all failed electrical continuity tests because of broken wires.

Conclusions. Because of the failure of the umbilicals previously described, they were dropped from the SEALAB program in September 1968.

Second Generation Primary Umbilicals (Contract N62399-69-C-0031)

Purpose. Because of the failure of the first generation primary umbilicals and the urgent requirement for umbilicals to support tests of various diver equipments and procedures to be conducted during the SEALAB III program, a contract was entered with Samuel Moore and Company for six units of a second generation primary umbilical concept. Parameters for the concept were identical to those for the original 200-foot-long primaries.

The function of each umbilical cable is to transmit electrical signals and deliver power and breathing gas from a habitat to the diver for whom the umbilical cable serves as a lifeline. The signals and power are required for the oxygen sensor system, which is associated with the MK VIII semi-closed-circuit breathing apparatus, and for the diver's intercom, light, and electrically heated suit or suit heater–pump. The design of the cables must incorporate reliability sufficient to withstand the ocean environment to depths of 1,000 feet for a period of 1 year.

The umbilical cables are expected to be used in a shallow ocean environment during any future aquanaut training and in deep ocean personnel transfer capsule and habitat exercises. The cables may encounter adverse storage conditions when not in use. Under normal SEALAB circumstances, the following conditions would have been expected:

1. During the training period
   a. Depth range: zero to 200 feet
   b. Temperature range: 35 to 120°F
   c. Operating cycle: 8 hours continuous use per day for 120 days
   d. Adverse conditions: exposure to seawater, sunlight, sand, and mud
2. During SEALAB habitat experiments
   a. Depth range: zero to 600 feet
   b. Temperature range: 40 to 95°F
   c. Operating cycle: 8 hours (four 2-hour continuous duty periods) per day for 60 days

d. Adverse conditions: continuous exposure to seawater and sand with intermittent exposure to helium saturated with water vapor

Description. Each umbilical cable bundle consisted of:

1. One 1/4-inch-ID hose, Samuel Moore and Company part number 3000-04000.

2. Four 12-gage insulated conductors for electrical heating power. Each conductor was composed of 65-strand, bunched copper wire, 0.096 inch in diameter, covered with a first sheath of a 20-mil thickness of natural low density polyethylene and a second sheath of a 10-mil thickness of natural 90°C PVC. The final diameter of the conductor was 0.156-inch nominal, 0.166-inch maximum.

3. Two 14-gage insulated conductors for powering the divers light. Each conductor was comprised of 41-strand, bunched copper wire, 0.080 inch in diameter, covered with a first sheath of a 20-mil thickness of natural low density polyethylene and a second sheath of a 10-mil thickness of natural 90°C PVC. The final diameter of the conductor was 0.140-inch nominal, 0.150-inch maximum.

4. One 16-gage shielded and jacketed conductor for communications power (DC). This conductor was composed of 65-strand, bunched copper wire, 0.062 inch in diameter, covered with a first sheath of a 15-mil thickness of natural low density polyethylene and a second sheath of a 10-mil thickness of natural 90°C PVC. The final diameter of the conductor was 0.112-inch nominal, 0.120-inch maximum. The double-sheathed conductor was twisted with an 18-gage, 41-strand drain wire, then wrapped overall with aluminum-mylar tape, mylar side out. An outer sheath of a 15-mil thickness of black polyurethane completed the conductor fabrication.

5. Four pairs of 18 gage shielded and jacketed electrical conductors; two pairs each to provide for the oxygen partial pressure sensor and the diver communications. Each conductor was of 18-gage, 41-strand, bunched copper wire, 0.051 inch in diameter, first sheathed with a 15-mil thickness of natural low density polyethylene, and a second sheath of a 10-mil thickness of 90°C PVC.

(The second sheath was black for one leg of a pair and white for the other.) The final diameter of the conductor was 0.101-inch nominal, 0.109-inch maximum. Each pair of sheathed conductors was twisted with an 18-gage, 41-strand drain wire, and wrapped with aluminum-mylar tape, mylar side out. The shielded pair was then jacketed with a 15-mil thickness of black polyurethane.

All of the components (1 through 5) were cabled with filler, mylar tape wrapped, and sheathed with a 0.075-inch minimum (0.090-inch nominal) thickness of yellow polyurethane with a final diameter of 1.09 to 1.19 inches. It should be noted that no attempt was made to add buoyancy materials to reduce the in-water weight of these units.

It is significant to note that the number of copper strands for these conductors was greatly increased over the specifications for the conductors in the original (rejected) primary umbilicals, and that the wire gage sizes differ for the diver heating and light components.

Overall length of these umbilicals was 200 feet ± 2.5%, when completed. A molded polyurethane encapsulation was installed 3 feet in from each end to seal the two breakouts against seawater intrusion while under pressure. The electrical conductors were separated from the gas hose to form the separate breakout elements. The breakout specifications were as follows:

1. Gas hose breakout.

   a. A 1/4-inch gas hose covered with a vinyl hose guard of 1/8-inch wall thickness.

   b. The gas hose to be fitted with a Samuel Moore and Company part number 3908-74003, reusable stainless steel connector with a -5 JIC swivel nut (1/2-20 UNF-3B thread).

2. An integral breakout leg composed of the electrical components cabled with filler, wrapped with mylar tape, and sheathed with polyurethane. The color of the polyurethane sheath to be different for each of the umbilicals, to aid the divers in identifying the umbilicals. (A second means for identification while the umbilicals are in use on the bottom was provided by putting marking rings, equal to the umbilical numerical identification, at intervals along the umbilical length).

   a. An Electro Oceanics, Inc. number 51B24F, 24-pin electrical connector, threaded for receiving a locking sleeve, to be molded to the electrical breakouts on one end of the umbilical.

b. An Electro Oceanics, Inc. number 51B24M, 24-pin electrical connector, with integral locking sleeve, to be molded to the electrical breakout at the other umbilical end.

The wiring of the connectors to the umbilicals was in accordance with DSSP correlation drawing 800-2654257, Revision A. The significant differences between the second generation units and the original primary umbilicals were the change in wire gage sizes and the use of multistranded conductors.

Contract Testing Requirements. The contract specified that the completed umbilicals were to be tested by the contractor prior to delivery to the government to assure that the umbilicals met certain criteria and were safe for use with the MK VIII mixed gas breathing apparatus. Testing was permitted at ambient room conditions and included:

1. Tests to assure continuity between corresponding connector contacts.

2. Dielectric withstanding voltage tests. Each completed umbilical cable was placed in a bath of conductive water. Water conductivity was assured by the addition of a minimum of 5% sodium chloride by weight. The test was performed in accordance with MIL-STD-202C, Method 301. Test voltage was 1,060 to 1,110 volts rms (1,000 volts plus 2 times the rated service voltage) applied for 1 minute between each conductor and all other conductors connected together and between a copper rod in the water bath and all conductors connected together. Test voltage was raised from zero to maximum at a rate of 500 volts per second. No evidence of breakdown or flashover between any pair of contacts or between the copper rod and any contact was permissible. Test personnel were cautioned to avoid any physical contact with the high potential leads when applying the test voltages.

3. Insulation resistance tests for each umbilical. The umbilicals were placed in the conductive water bath while the insulation resistance was measured in accordance with MIL-STD-202C, Method 302, Test Condition B. The resistance was measured between each conductor and all other conductors connected together. Electrification time for each measurement was 1 minute. Insulation resistance was required to be greater than 100 megohms.

4. Dielectric and insulation resistance tests between shields were prohibited. (Testing was performed from shields connected together to every other conductor and to the copper rod.)

5. Flex testing of the completed (wired and molded) connector assemblies. The test setup was similar to that indicated in Figure 10. The bonded joint between the connector boot and cable jacket was located at the intersection of the 45-degree lines through the centers of the two rollers. The rollers for this test were 12 inches in diameter. The umbilicals were firmly clamped to the test apparatus, as shown. The connector was subjected to a 90-degree bend in each direction (100 cycles) at a rate of 12 to 14 complete cycles per minute. Following the first 100-cycle test phase, the umbilical was rotated 90 degrees and the testing repeated. Throughout the testing and after each 20 cycles of flexing, an electrical continuity check was made. No discontinuity was acceptable.

NCEL Testing. Testing at NCEL included an insulation resistance check, as delineated in Figure 5, prior to and after subjecting each umbilical to hydrostatic pressurization to 300 psig in seawater.

In the testing of the second generation umbilicals, the gas hose was plugged at one end and the pressure vessel was filled with seawater only to a depth sufficient to cover the coiled umbilical. The unplugged end of the gas hose was tied to a support in the space above water level. During pressurization, this pressure vessel space and the gas hose were filled with helium of equal pressure.

Test Results. As the umbilicals were received at NCEL and subjected to pressurization and subsequent insulation resistance testing, failures became evident. By dissection, the failures (low megohm readings) were traced to the proximity of the connectors. The problem appeared to be at the bonding interface between the molded neoprene of the connector and the polyurethane connector potting. Only one umbilical passed the first tests. The remaining units were returned to the contractor for corrective action. Subsequently, three additional umbilicals were tested and accepted. Two units were tested and returned a second time for corrective action.

There were no immediate failures resulting from initial contractor flexing tests. Following contractor corrective action for low insulation resistance readings (after pressurization and subsequent use by divers), one umbilical developed a discontinuity in one conductor.

As noted under NCEL testing, the gas hose was to be kept dry to ensure cleanliness of the hose. The original, rejected primary umbilicals required tedious cleansing following salt water incursion into the hoses during tests.

The contractor's first prototype was taken to EDU for weight tests under pressure. The 200-foot umbilical weighed 140 pounds before weighing it in water, then 33 pounds in water at surface pressure, 43 pounds when first submitted to water at 600-foot depth pressures, 44 pounds after 20 hours

at this pressure, 37 pounds when returned to the water at surface pressure, and 140 pounds out of water after the water test.

Conclusions. Based upon failures of umbilicals produced under Contracts N62399-67-C-0035 and N62399-69-C-0031, it was concluded that the state-of-the-art for installing and molding the Electro Oceanics, Inc. 51B24F and 51B24M connectors to diver's umbilicals had not yet reached the high degree of reliability required for SEALAB III type operations. It is apparent that a need exists for further research and development into the technology for molding and bonding polyurethane to polyurethane and to other materials such as neoprene.

It was concluded that the use of conductors comprised of numerous (41 to 65) strands of soft copper virtually corrected the problems of discontinuity suffered by the original, rejected umbilicals. However, since one discontinuity was suffered after comparatively limited usage, it is evident that further research is needed in that area, especially in the techniques for joining the conductor wires to connector contacts.

Consideration has been given to the following possibilities that may contribute to the low resistance readings:

1. Since a preponderance of failures occurred with the heavy gage conductors associated with diver heating, it is a possibility that:

   a. The large size of the solder connection, joining wire to connector, may have so reduced the separating space between connections that the thickness of polyurethane potting materials was not sufficient to provide required insulation.

   b. When it is considered that the failures followed the squeezing action caused by pressurization tests, it appears plausible that damage to the umbilicals occurred at that time, reducing the insulating capacity of the intervening materials.

   c. The large size of the solder connection places it in close proximity to the steel connector shell where the intervening insulation may have suffered the same effects as stated in a and b above.

2. A study of the polyurethane potting compound and molding methods might reveal a conductive path in the bond coating materials.

3. The polyurethane potting compound may be slightly hygroscopic in thin sections or impurities may create a conductive path when subjected to hydraulic pressures.

Future Plans. The accepted units may be used for aquanaut training purposes and for specific projects.

Modified Second Generation Primary Umbilicals (Contract N62399-69-C-0032)

Purpose. With the continuing difficulties associated with umbilicals utilizing the Electro Oceanics 51B24F and 51B24M, 24-pin connectors (encountered with both the first and the second generation primaries), fabrication of four units of a modified version of the second generation umbilical was proposed. The concept for these umbilicals incorporated all of the required electrical and gas hose components, but utilized a 24-pin, D. G. O'Brien connector at the habitat end and a spread of five electrical breakouts, each terminated with a connector, at the diver end.

In all cases where umbilicals with 24-contact EO connectors were to be used, the umbilicals would be mated to 24-pin EO bulkhead connectors mounted externally on the diver's station of the habitat. This would permit making and breaking the umbilical connection in the water for replacements. In the modification concept, the D. G. O'Brien connector was to be mated with its complement in the helium-oxygen atmosphere of the habitat diver's station. In order to do this, the wiring within the diver's station would have to be severed and two pigtails (one with male half and one with female half of a complete D. G. O'Brien connector) spliced onto the severed ends. By this arrangement, an EO bulkhead connector could be taken out of a circuit while a D. G. O'Brien connector-fitted umbilical was being utilized. This would ensure that any failure with an EO bulkhead connector would not affect the function of the related (D. G. O'Brien) umbilical. The overriding purposes of this arrangement were to circumvent the use of the troublesome EO 24-pin connector and permit connector mating in a "dry" environment—an added precaution against circuit failures.

This proposed arrangement also imposed a requirement for 50-foot-long gas hose jumpers to reach from the outside gas hose connections to the umbilical gas hose connection within the habitat diver's station.

A further effort to solve the umbilical connector problems included the proposal for fitting the diver's end of the umbilicals with five individual electrical breakouts, each with its own connector for mating directly with the corresponding component of diver mounted life support equipment. This would accomplish three purposes: eliminate the troublesome intermediate 24-contact EO connector pair, permit making "dry" connections before the diver leaves the diving station, and eliminate the necessity for mounting the electrical harness in the MK VIII backpack.

Description. Since the ultimate objectives of the modified second generation primary umbilicals were identical to those of the other design (Contract N62399-69-C-0031), the normal operating requirements and design criteria remained the same. The integral umbilical gas hose design and the umbilical electrical cable bundle requirements remained the same. The proposed modification required specification changes. These design specification changes included:

1. Installation of D. G. O'Brien part number 107-16-245 connector (plug) on the habitat end electrical breakout.

2. A 54-inch instead of a 36-inch gas hose breakout at the diver's end.

3. The attachment of five electrical breakouts, identical in all respects to the pigtail breakouts of the MK VIII backpack mounted electrical harness, also described in this report, because they were cut from four of the harnesses.

4. The wiring of connectors in accordance with DSSP Correlation Drawing 800-2654257, Revision A, with the following ***significant*** exceptions:

   a. Eight 12-gage, 65-strand wires in lieu of 10-gage, 19-strand wires to be used between the 24-pin connector and the related pigtail breakout to the diver's heating equipment. Four of these conductors (individually joined to D. C. O'Brien connector pins numbered 16 through 19) to be joined together and to the number 1 and 2 contacts of the EO 51E4F-LSN connector at the diver's end breakout (heater). The remaining four conductors (individually joined to D. G. O'Brien connector pins numbered 20 through 23) to be joined together and to the number 3 and 4 contacts of the EO connector.

   b. Wires of 14-gage size and 41 strands in lieu of 10-gage, 19-strand wires to be used between the 24-pin connector pins numbered 14 and 15 and the related pigtail breakout to the diver's light.

   c. Shields for the two shielded and jacketed pairs connecting the 24-pin connector to the diver's pO_2 sensor to be connected together at each end. They were also to be connected to the number 13 contact in the 24-pin connector *and to the number 9 pin circuit at the EO 52F4F connector contact in the diver's end breakout (pO_2 sensor).* This presented

no problem since the number 13 contact was not used in the habitat diver's station bulkhead connectors. (This is shown on the DSSP Correlation Drawing.)

5. Stainless steel caps provided to protect the D. G. O'Brien connectors from seawater while being lowered to the test site.

The weight of the modified umbilicals closely approximated the weight of the original Samuel Moore and Company umbilicals.

Contract Testing Requirements. Contract requirements for testing the modified second generation primary umbilicals prior to delivery were identical to those for the second generation primary umbilicals.

NCEL Testing. Testing at NCEL was essentially the same as that for the second generation primary umbilicals. The only significant difference was the test equipment used. Referring to Figure 5, the test pigtail used to ground the conductors and shields terminated in a D. G. O'Brien 24-pin connector (receptacle), part number 107-16-24 P/FW, rather than the EO 24-pin connector. This provided for mating with the 24-pin umbilical connector (plug).

Test Results. All of the modified second generation primary umbilicals passed the required tests and were delivered to SEALAB. Prior to delivery, however, NCEL modified the stainless steel protective connector caps by drilling and tapping a hole through the top and installing a special threaded plug with an air passage arrangement. This was done so that when the plug is partially unscrewed, pressure differential can be bled off, either into the connector or out of it, depending upon whether the cap is installed at the surface for removal at the test site or installed at the test site for removal at the surface.

Conclusions. Based upon the successful testing of these units, it was concluded that:

1. Whenever possible, electrical connectors should be mated under "dry" conditions rather than in water.

2. The state-of-the-art of the development of dry, 24-pin connectors was further advanced for those connectors used under conditions for which they were designed, than was true for the wet, EO 24-pin connectors when used under conditions for which they were designed.

Future Plans. The modified second generation primary umbilical, with D. G. O'Brien 24-pin connector and five pigtail electrical breakouts, was selected to be the principal primary umbilical for use in SEALAB III exercises. They were to have been backed up by the second generation primary umbilicals with EO 24-pin connectors.

DIVER'S BACKPACK LIFE SUPPORT EQUIPMENT CONNECTOR ELECTRICAL HARNESS

Discussion

Sixteen diver's electrical harnesses were provided to serve as the connecting link between the original and modified primary umbilicals and the individual components of the diver mounted life support equipment. These electrical harnesses were tested in accordance with the SEALAB III Aquanaut Safety Certification Program Procedure 101A to determine if the units would meet the test requirements specified therein and to assure diver safety when the harnesses were mounted in and used with the MK VIII Breathing Apparatus (Figure 11).

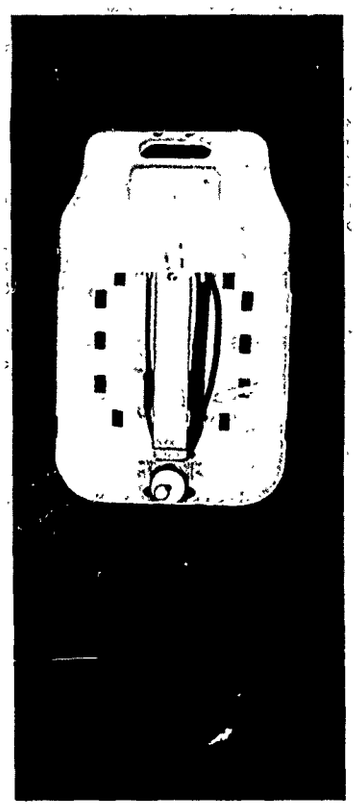

Figure 11. MK VIII backpack with electrical harness installed.

Contract N62399-67-C-0035, Item 1

The diver's electrical harnesses shown in Figure 12 were fabricated by Electro Oceanics, Incorporated, under Contract N62399-67-C-0035.

Description. Each electrical harness incorporated: (1) an Electro Oceanics, specially designed, 24-contact, 51B24F connector for mating with a diver's primary umbilical cable fitted with an appropriate EO connector mating half; (2) five connecting electrical cable pigtails of proper gage; and (3) five individual EO connector mating halves required for assembling to the diver mounted life support equipments. The 24-contact connector half (female) was provided with an integral male half of a male-female threaded locking device.

The five cable breakouts from the 24-contact connector include: (1) cable to partial-oxygen pressure (pO_2) sensor terminating

with a 52F4F connector; (2) cable to diver's light with a 52E2F connector; (3) cable to heater (pump or suit) ending with a 51E4F connector with male half of a Delrin, 4-thread-per-inch locking sleeve (LSN); (4) cable to earphones with a 51F2F connector; and (5) cable to microphone with a 52F4F connector. Dummy mating half-connectors and mating half locking sleeves, where applicable, were provided for protection of the connectors.

All connector electrical contacts were of brass (Federal Specification QQ-B-626C) plated to conform to MIL-G-45204A, Type II, Class III, with a 0.0002-inch thickness of gold.

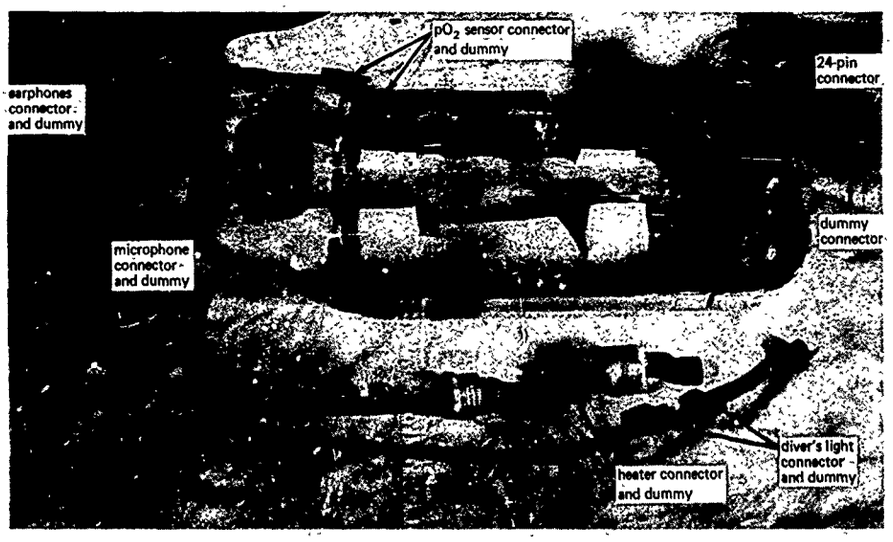

Figure 12. Diver's electrical harness with backpack shell.

Each harness was wired in accordance with DSSP Drawing 800-2654257, Revision A.

Contract Test Requirements. All electrical harnesses were subjected to tests by the manufacturer in order to assure compliance with the Aquanaut Safety Certification Program Procedure 202C (Appendix B).

NCEL Test Setup and Equipment List. A test setup was required to determine if the connector plug-receptacle interfaces would separate when an axial force of 5 pounds was applied. For this test, a laboratory test stand, jaw clamp, and 5-pound weight were used (Figure 13). When it was found that substantially more than 5 pounds was required to separate four of the five plug-receptacle combinations, each plug was separated by an axial force which was read on a 30-pound capacity spring scale as shown in Figure 14.

Figure 13. Harness electrical connector separation test (5-pound pull).

Figure 14. Collecting connector separation data.

Test equipment required for measurement of electrical characteristics consisted of: (1) a Simpson meter to determine circuit continuity, (2) a megohmmeter, (3) a grounding network made from the male connector end of a primary umbilical, and (4) a tank of water to be set up as shown in Figure 15, for conducting the insulation electrical resistance tests.

Several pressure vessels of adequate size and pressure range were available for pressurization tests.

NCEL Test Procedure. The Safety Certification Program Procedure 101A required the following:

1. Examination of the connectors, cables, and piece parts to determine compliance with the dimensions and workmanship requirements of the contract specification. All harnesses were considered acceptable when delivered by the contractor.

2. Engagement and disengagement of all connectors, five successive times, to determine relative ease of that operation. Originally, this test was to have been performed with the operator wearing the type of diver's gloves worn when the MK VIII system was in use, but this requirement was waived on 19 February 1968.

3. Test for plug-receptacle connector retention under a 5-pound axial force. Maximum separation of the connector halves under this force was not to exceed 0.1 inch under the load.

Following difficulties encountered during service usage of the MK VIII backpack electrical harnesses at San Diego and San Francisco, pressurization and insulation resistance tests were conducted. Pressurization tests were

performed in pressure vessels. The insulation resistance test procedure, conducted with the setup as indicated in Figure 15, consisted of determining the minimum insulation resistance for each conductor when measured against all other conductors grounded together in the manner described previously for primary umbilicals.

Test Results and Analysis.

Examination. All connectors, except the special 24-contact 51B24F, were Electro Oceanics standard catalog items molded from neoprene; there was no evidence of loose external contacts. The connector exteriors, although not precision-finished, were acceptable. Inspection of internal contacts of the connectors was not possible.

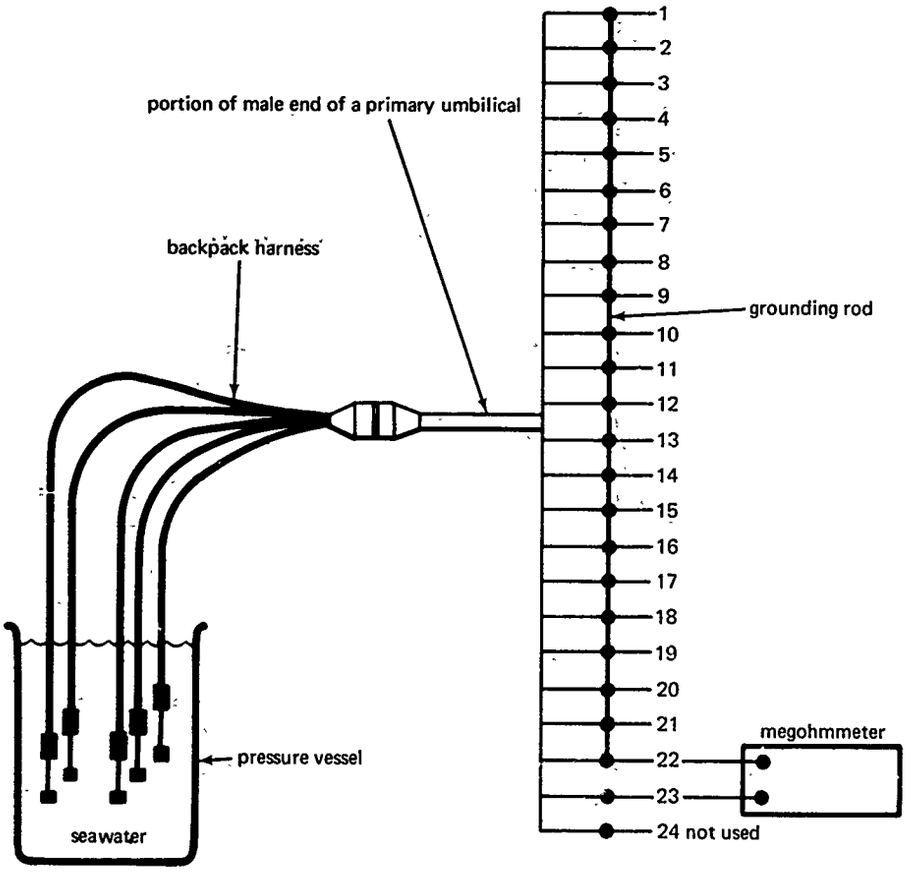

Figure 15. Test arrangement for harness electrical resistance measurement.

When the harnesses were compared, corresponding cable pigtails were found to be of different lengths. Except for the pO_2 sensor cable, all desired cable lengths specified in the contract were established in discussions with SEALAB III diver personnel and as determined at NCEL using a MK VIII breathing apparatus mockup sent by the Navy Experimental Diving Unit. Allowances in cable length were made for diver size and body movement.

The pO_2 sensor cable was contained wholly within the backpack and was not affected by diver size or movement; 22 inches was the approximate required dimension for this pigtail. No tolerances were called out in the contract. All cable breakouts, with the exception of one pO_2 sensor cable, would mate with the pertinent component connector without difficulty. Because of the urgent need for the harnesses for use in imminent diver training exercises, they were not returned to EO for cable length changes. Electro Oceanics later replaced the one pO_2 sensor cable which was short.

When each harness was installed into a backpack shell, the harness was oriented in its mounting bracket so that the pO_2 sensor cable was in the most favorable position to provide the shortest distance to the pO_2 sensor connector mounted at the top of the baralyme canister in the backpack. The harness cables did not issue identically from all 24-contact connector housings.

Past experience with EO connectors molded with urethane interfacing with neoprene had demonstrated a high incidence of failures; therefore, the failures uncovered were not unexpected.

Operational Test. The operational test was conducted with each harness and associated dummy connectors. Diver support accessories—light, microphone, etc—were not available at NCEL. The connectors were engaged and disengaged five successive times without jamming. The ease of engagement depended upon the size of the connector. The 51F2F and dummy connectors engaged and disengaged easily; the 52E2F and 52F4F and dummy connectors required slightly more effort, and the 51E4F-LSN connector required considerable effort.

Connector Retention. It became apparent after testing the first two harnesses that there would be no difficulty in meeting the required 5-pound pull test on the connectors. Following delivery of the first two units, all other harness connectors were tested for retention by pulling against a 30-pound capacity spring scale. It was found that after connectors had been mated for a period of time, a greater pull was required to separate the connector halves than in all following successive separations (see Table 1).

Table 1. Pull Required to Separate Connectors

(Sixteen harnesses with mating dummy connectors.)

Connector With Dummy	First Separation (lb)	Average[a] (lb)
pO_2 sensor	24	14
Diver's light	23	20
Heater	30	30
Earphone	12	7
Microphone	24	17

[a] Five successive separations

Functional Tests. Following initial examination after receipt, 14 harnesses were forwarded to the San Francisco Bay Naval Shipyard to be used in SEALAB III, Phase B2 tests. This phase tested the integration of aquanaut life support equipment and the habitat. During the Phase B2 tests, eight of the units failed to meet required standards and were returned to the manufacturer via NCEL for corrective actions. Because of the occurrence of these latent defects, DSSP specified hydrostatic pressure tests.

NCEL tested each unit for circuit continuity and for insulation electrical resistance of 100 megohms minimum at 500 volts. The harnesses were then hydrostatically pressurized to 300 psig in seawater. Following pressurization, each unit was again subjected to the insulation electrical resistance test. Four harnesses passed the post-pressurization resistance test and were delivered to DSSPTO. The units failing the test were returned to the manufacturer for study.

The manufacturer concluded that the sheaths covering the heater power cables on four units had become defective and undertook to replace those units. Failures in some harnesses occurred within the 24-contact connectors due to seawater penetration—a result of improper bonding of the polyurethane potting material. Eight harnesses were reworked and in the process, the polyurethane potting was removed and the connectors were molded of neoprene. The breakout cables of the remaining three units were sent to Samuel Moore and Company, along with a fourth harness (the

24-contact connector of which had suffered repeated failures) to be incorporated into the new type modified second-generation primary umbilical previously described (Contract N62399-69-C-0032).

As the new and repaired harnesses were received at NCEL, they were tested to determine their acceptability. Remolding was required for 12 of the 16 harnesses, at least one time; only four remained as originally fabricated. Several required more than one reworking. The exact count for each was not possible because the original numerical identification provided by the manufacturer became obliterated during the many reshipments and repairs.

Modifications Required. The locking sleeves (LSN) originally furnished for the heater cable had four threads per inch. In analyzing the interfacing requirements for the heater cable, it was discovered that the General Instrument heater–pump units (Calrod type) had been provided with locking sleeves with six threads per inch. It was deemed to be most expeditious to change the sleeves on the heater–pumps.

During late aquanaut training phases, it was determined that the diver's breathing-gas CO_2 scrubber canisters would require heating to enhance their chemical efficiency in reducing the percentage of CO_2 concentration of the gas. This was accomplished by adding a water jacket to the canister, through which warm water was passed. The addition of this jacket created a problem with the electrical harness because the pO_2 sensor cable had been routed diagonally between the emergency breathing-gas cylinder and the canister, to its connecting plug. The water jacket utilized this space, thus requiring a new path for the sensor cable. This new path made it necessary to provide 6-inch jumper cables, with mating EO connectors to accommodate the change.

Conclusions. Twenty-five percent of the original 16 harnesses withstood the rigors of testing and use without requiring repair. Fifty percent were usable following at least one repair. Twenty-five percent were utilized in fabrication of other equipment.

It is expected that divers will experience difficulty in engaging and disengaging the 51E4F connectors if they are wearing gloves. However, all harness connectors will probably be mated inside a habitat or personnel transfer capsule (PTC) so that the use of gloves undoubtedly will be unnecessary.

It should be noted that the connectors for the pO_2 sensor and the diver's microphone were identical. This condition created a remote possibility of connecting the microphone pigtail to the pO_2 sensor. Due to its short length, the pO_2 sensor pigtail cannot be mated to the microphone. It was also noted that the diver's light pigtail connector could become mismated with

the pO_2 sensor or the microphone connectors, which would result in an inconvenience, but no damage. However, if the dummy connector for the diver's light was inadvertently used on either the pO_2 sensor or microphone pigtails, it would produce a short across the double contacts in the female receptacles. Instructions were issued to DSSPTO to color code the diver's light pigtail connector and dummy connector. In future procurements, each piece of equipment serviced should be provided with its own unique or distinctive pair of mating connectors.

Recommendation. Future efforts in research and development should be expanded in advancing the state-of-the-art for electrical connectors for oceanographic and deep sea use, particularly in the field of connectors to be mated and disconnected under water.

DIVER'S SECONDARY ELECTRICAL LIFE SUPPORT EQUIPMENT UMBILICAL CABLE

General Requirements

A requirement existed for aquanaut life support umbilicals (Figure 16) to fulfill the life support requirements of a man utilizing an open-circuit hot water heated diver's wet suit (Figure 17) while conducting in-water work assignments. Such assignments may be performed when based either in an ocean bottom habitat under saturated conditions or conducted from a diving bell (personnel transfer capsule) and utilizing the "bounce" dive of saturated techniques. These have been designated as secondary umbilicals (Figure 18).

The concept of using secondary umbilicals requires that they be bundled with, or married to, the diver's heating-water-supply hose and the diver's breathing-gas hose shown in Figure 17. Secondary umbilical functional requirements are limited to transmitting electrical signals and power between the diver's base of operations and diver mounted life support equipment.

Contracts N62399-68-C-0011 and N62399-68-C-0014

Six 200-foot-long and three 600-foot-long secondary umbilicals were fabricated under Contract N62399-68-C-0011 in accordance with DSSP Correlation Drawing 800-2654288. Design parameters of the completed umbilicals included neutral buoyancy. Negative rather than positive buoyancy was required if the desired neutral buoyancy could not be achieved.

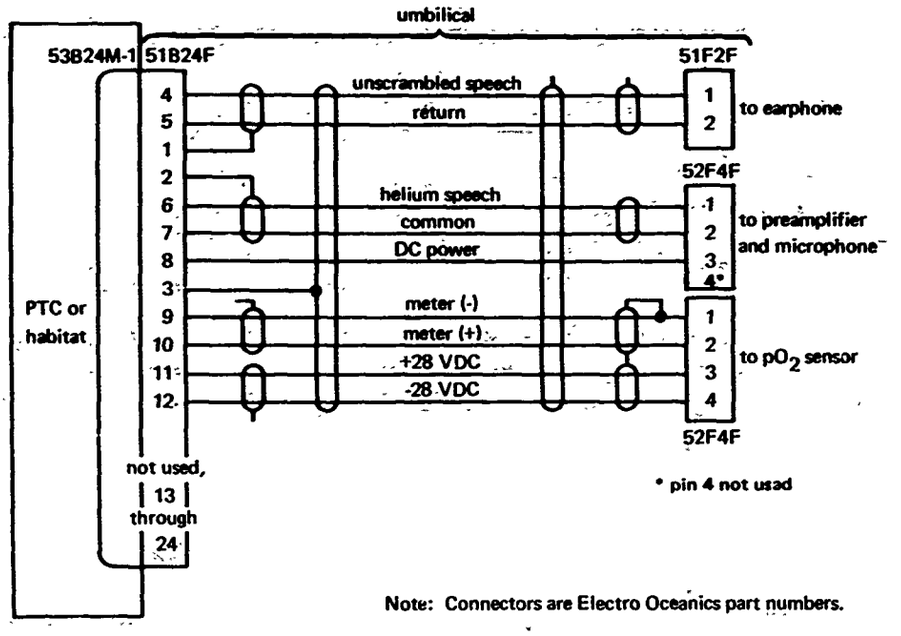

Figure 16: Umbilical schematic (secondary).

The umbilical connectors, provided under Contract N62399-68-C-0014 (Electro Oceanics, Inc.), were compatible with those on the diver's habitat and personnel transfer capsules and with the diver's life support equipment. The contract also required the attachment of these connectors onto the nine secondary umbilicals provided under Contract N62399-68-C-0011. Design requirements for their installation included incorporating sufficient reliability to ensure that the inherent reliability of the umbilical cables was not compromised.

Description. Electrical wiring was required to provide services for a pO_2 sensor, intercom earphones, and intercom microphone and amplifier. One end of the umbilical was designed to accept a single 24-pin connector with locking device. The other end terminated in three pigtail breakouts (see Figure 19). The pO_2 sensor breakout was 22 inches long. The two intercom breakouts were 42 inches long.

Electrical requirements for the pO_2 sensor called for four 18-gage, 7-strand copper wires, each insulated with a 15-mil thickness of 90°C PVC. Two twisted pairs of these conductors were formed on a 2-inch lay, each with a bare 20-gage, 7-strand copper drain wire, and helically wrapped with aluminum-mylar tape (mylar side out) with a 25% overlap. Each of these shielded pairs was sheathed by a 20-mil-thick, 80°C PVC, thermally shrinkable tubing.

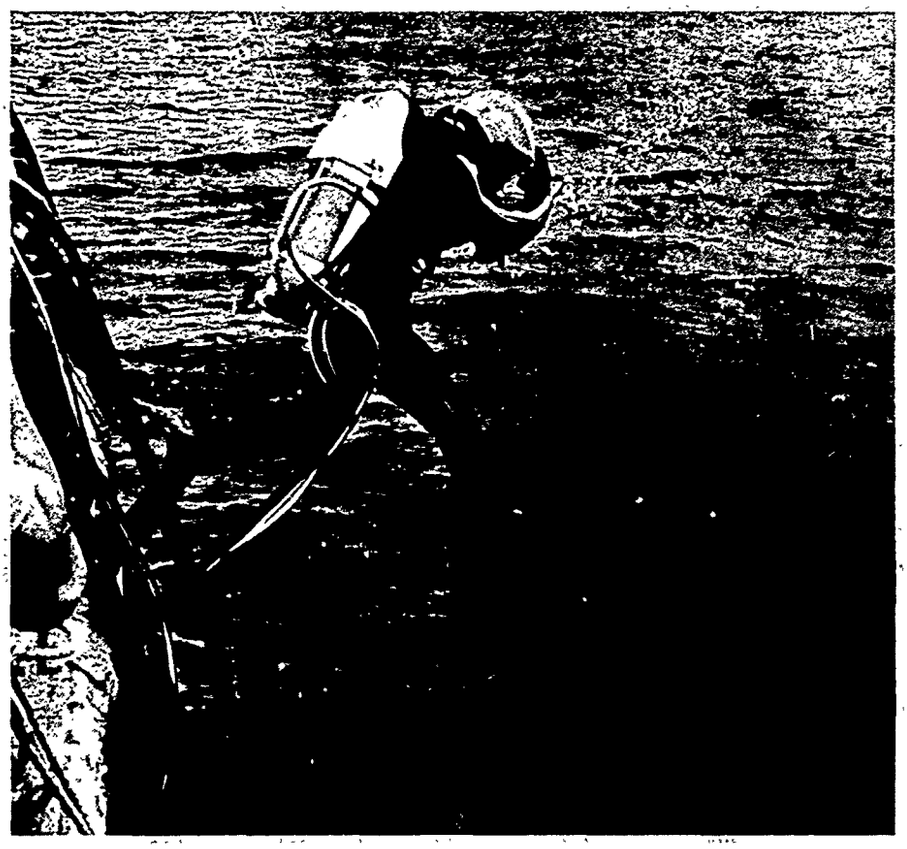

Figure 17. Diver rigged with deep-diving gear including umbilical.

Electrical conductor requirements for the intercom included a single 16-gage, 7-strand copper wire and four 18-gage, 7-strand copper wires, all insulated with a 15-mil thickness of 90°C PVC. One pair of the 18-gage conductors was twisted on a 2-inch lay with a bare 20-gage, 7-strand copper drain wire and helically wrapped with aluminum-mylar tape (mylar side out) with a 25% overlap. This pair of conductors was sheathed in a 20-mil-thick, 80°C PVC, thermally shrinkable tubing and was bundled with the single 16-gage wire to become the microphone breakout. The remaining pair, similarly shielded and insulated, was utilized as the earphone breakout. Each conductor was color coded with its own distinctive color.

The secondary umbilical cable bundle was formed on an 18-inch lay, shielded overall with aluminum-mylar tape (mylar side out) helically wrapped with a 25% overlap. The bundle included a bare 20-gage, 7-strand copper drain wire in continuous contact with the aluminum side of the shield. The bundle and breakouts were jacketed with approximately a 1/10-inch thickness

of polyurethane. Design requirements for encapsulation of the umbilical cable and breakouts called for prevention of salt water entry at hydrostatic pressures equivalent to a 1,000-foot depth. Sheathing resilience was required to permit flexing of cable as might be necessary in use.

Figure 18. Life support umbilical (secondary).

The connectors were attached to the umbilicals in the arrangement shown on DSSP Correlation Drawing 800-2654288 and in Figure 16. Each connector was furnished with a mating dummy connector as shown in Figure 12 to provide for both mechanical and electrical protection. Seal integrity requirements for the connector-dummy matings were identical to those for male-female wired connector matings. All connectors were fabricated to tolerances permitting interchangeability between like diver equipments and equipments with like function purposes. Connector electrical contacts were of gold-plated brass. The brass conformed to specification QQ-B-626C, plated to conform to MIL-G-45204A, Type II, Class III.

Contract Test Requirements. The cable fabricator was required to test the finished products and ensure electrical continuity of all conductors. Each cable was placed into a water bath of 5% (minimum by weight) sodium chloride and a dielectric test performed in accordance with Appendix B. Tests performed under Contract N62399-68-C-0011 were conducted at ambient room conditions. The tests were eliminated under Contract N62399-68-C-0014 at the request of DSSP. It should be noted that the contract did not require any pressurization tests of the umbilicals.

NCEL Tests. The finished product was examined to determine compliance with dimensions and workmanship requirements of the contract. All connectors were engaged and disengaged with mating dummies five successive times to determine the relative ease of this operation.

Test Results and Analysis. All secondary umbilicals passed the tests required by the contract and those initially conducted at NCEL.

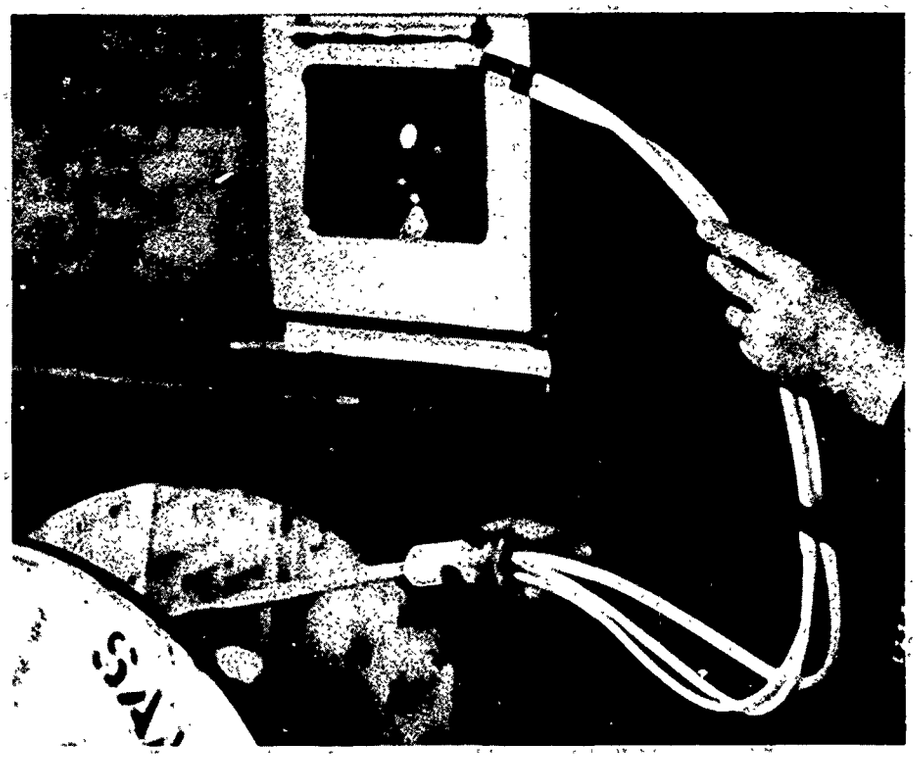

Figure 19. Electrical conductor breakout (secondary umbilical).

It was determined that the umbilicals, in their final design configuration, had been fabricated to the allowed weight tolerance of 3.5 to 6.5 pounds per 100 feet of length at a submerged depth of 2 feet in seawater.

The first unit delivered was forwarded to the Experimental Diving Unit (EDU) for equipment integration tests at a submerged pressure equivalent to 600 feet in a diver training chamber. The unit functioned well for a period of time, then interference was noted on the intercom circuit.

The remaining secondary umbilicals had been delivered to DSSPTO following initial testing. After some usage, the connectors of these umbilicals were examined by EO representatives who found that repair of some connectors was required due to faulty polyurethane potting. The repairs were attempted in the field, but were unsuccessful. The affected units were then returned to EO where they were remolded, using neoprene.

Six units were sent to the San Francisco Bay Naval Shipyard for Phase B2 diver training (equipment integration). Following additional difficulties such as poor contact matings and electrical failures of an umbilical,

subsequent to the EDU hydrostatic pressure test at 300 psig, the six units were returned to NCEL for seawater pressurization (600-foot depth equivalent) followed by insulation resistance tests accomplished in the same manner as indicated for the primary umbilicals. Only two units passed the test. The others were returned to the contractor for repair. This was the beginning of a series of such experiences with connector related difficulties involving either poor bonding of moldings, poor contact matings, or conductor separations from the connector pins.

Eventually, one 600-foot unit failed due to an apparent break in a conductor. When the location of the break, about 70 feet from one end, was determined, the umbilical was opened at that point for examination. This examination revealed that the individual copper conductor filaments had apparently become work hardened and had fractured. During an attempt to mend the break, it was discovered that a second break had occurred approximately 4 feet from the first break. A 1-foot section of the umbilical was then removed and dissected. It was found that the conductors had suffered closely spaced multiple kinking and some evidence of crushing. However, there was no evident damage to the insulation sheaths. This condition suggested one or more of the following:

1. Use of previously damaged conductor wire
2. Damage prior to applying the sheath
3. Damage when applying the sheath
4. Damage during cabling

A length of the umbilical was sent to Samuel Moore and Company for inspection and determination of the original source of damage. The findings were not reported to NCEL.

The 200-foot secondary umbilical, which had been exercised in the April 1968 EDU saturation dive, experienced several failures and was returned each time to the connector contractor for repair. Following each repair, the unit passed the prepressurization resistance tests but failed the postpressure test. It was not until January 1969, however, that water was discovered inside the insulation sheath.

Conclusions. Secondary umbilicals of this type will be constantly subjected to coiling, uncoiling, and small-radius bending around objects during future operations. To reduce the possibility of work hardening, only dead soft copper conductors of fine multifilament design should be used.

A high degree of quality control should be exercised in materials selection and in the fabricating processes.

Intensive research and development should be undertaken to advance the state-of-the-art for underwater connectors and the method of integrating connectors into the cabling.

With the failures of the original primary umbilicals and subsequent acceptance of five 200-foot and two 600-foot secondary umbilicals, the prospects for a successful SEALAB III program appeared to rest with the secondary units. Their importance to the program was augmented when it became evident that the Divers Unlimited open-circuit water heated suit system would be assigned as one of the principal aquanaut diving equipments. The secondary umbilicals had been designed for use with such a system and carried no circuits for heating the divers by electrical means. The resulting smaller diameter of the secondary umbilicals contributed smaller drag forces than the primary umbilicals. In use, the secondary umbilicals were to have been married to a breathing gas hose and the diver's hot water supply umbilical.

Subsequent development of the modified second generation primary umbilicals (Contract N62399-69-C-0032) may have altered the status of the secondary umbilicals, reverting them to their original mission assignment had SEALAB III continued on schedule.

Future Plans. Secondary umbilicals meeting acceptable performance standards have been included in the life support equipment to be used during aquanaut training and special projects under cognizance of DSSPTO.

Recommendations. It is recommended that:

1. A program be initiated to advance the state-of-the-art for exterior sheathing materials for diver's life support umbilicals.

2. Second generation, secondary umbilicals utilize multistranded dead soft copper conductors.

UMBILICAL GAS HOSES

Discussion

Each primary diver's umbilical incorporates a gas hose (Figure 20) to provide the principal means for supplying the diver's mixed breathing gas (Helium-oxygen). The diver's Mark VIII backpack breathing apparatus only provides for an emergency situation and for only a very limited time. Separate

gas hoses are to be provided for those occasions when the divers will utilize the secondary electrical umbilicals which do not incorporate gas hose. These separate gas hoses will be married to the secondary umbilicals, together with an open-circuit, hot water diver's heating hose (Figure 17). Separate 50-foot-long jumper gas hoses will be provided for use with the modified second generation primary umbilicals. These jumpers are required to interface between the gas hose connection outside the habitat diver's station and pass into the diver's station to mate with the gas hose breakout on the habitat end of the modified umbilical. Further details regarding the reasons for this arrangement have been discussed in the report section dealing with the modified second generation primary umbilicals.

Figure 20. Breathing-gas hose of composite umbilicals (center hoses).

Description

The 1/4-inch-ID umbilical gas hoses are designed for and rated to have a rupture point in excess of 12,000 psig. They are fabricated of flexible, nonhygroscopic nylon, reinforced with Dacron braids, and covered by an extruded polyurethane sheath.

Test Requirements

Gas hoses of the original primary umbilicals and the nine gas hoses for use with the secondary umbilicals had tapered pipe thread fittings when first purchased. The original Snap-Tite quick-disconnect couplings on the gas hoses, the mating fittings of the shuttle valves on the diver's MK VIII breathing apparatus, and the breathing-gas hose fittings for the proposed SEALAB III habitat all had tapered pipe threads. In January 1968, before

the original primaries had been discarded and other primaries had not yet been purchased, DSSP decided to change the taper threads to Military Standard straight threads. NCEL purchased 50 Samuel Moore and Company, part number 3908-74003, Synflex, 316 stainless steel hose fittings conforming to Military Standard MS28740-5. These were installed on each end of 16 original primary and nine secondary umbilicals.

NCEL also purchased from Snap-Tite Inc. six quick-disconnect coupler assemblies, part number 3847-8; six quick-disconnect nipple assemblies, part number 3847-9; 22 adapters, part number 30-12461-5, to convert the 3847-2 couplers on hand at DSSPTO to 3847-8 couplers; and 22 adapters, part number 30-12460-5, to convert the 3847-3 nipples on hand at DSSPTO to 3847-9 nipples. All of the Snap-Tite assembly end fittings had male threads conforming to Military Standard MS33656-5, Style E. Additionally, 20 shuttle valve inserts, for use on the shuttle valves of the breathing apparatus, were purchased from Circle Seal Products Company. The inserts were part number 25182B, conforming to AND10050-5.

The new diver's umbilical gas hose fittings and mating parts had to meet the specifications of safety certification procedures (Appendix C). To satisfy this requirement and thus assure diver safety when used with the MK VIII breathing apparatus, the following items were tested:

1. Gas hose with new end fittings (Military Standard MS28740-5) installed as integral parts of the original 16 primary umbilicals (Samuel Moore and Company, Contract N00600-67-C-1180) and on nine separate gas hose umbilicals also manufactured by Samuel Moore and Company.

2. Twenty-four quick-disconnect couplings; Snap-Tite, Inc., valved couplers, part number 3847-8 (18 of which were modified part number 3847-2 and 6 were new couplers); and 23 Snap-Tite, Inc., valved nipples, part number 3847-9 (17 were modified part number 3847-3 and 6 were new nipples), all with male threaded ends conforming to Military Standard MS33656-5, Style E.

3. Twenty shuttle valve inserts; Circle Seal Products Company, part number 25182B with AND10050-5 specification threads; each insert for mounting in a shuttle valve of the breathing apparatus.

Test Setup and Equipment

Umbilical gas hose tests were conducted at the Deep Submergence Systems Project Technical Office, Ballast Point, San Diego, California, with equipment normally used to service, maintain, and test components of diver's MK VIII breathing apparatus. In the DSSPTO setup, helium for the tests is delivered from storage tanks to a Corblin Diaphragm Compressor, Model A2C250SS (American Instrument Company, Inc.), where the pressure is increased as required for the test. The helium then passes through a shutoff valve, gage, and adapter hose to the test specimen (shuttle valve and gas hose with fittings in a water-filled test tank).

Test Procedure

The Safety Certification Program Procedure 201A (Appendix C) required the following:

1. Examination of the gas couplings, hoses, and piece parts to ensure compliance with the dimensions and workmanship requirements of the contract and purchase specifications.

2. Cleansing the hoses, fittings, and test plumbing in accordance with Safety Certification Program Component Cleaning Procedure 401.

3. Subjecting all umbilical hoses and fittings to 3,000 psig internal helium pressure. (The fittings were submerged in a water bath and observed while pressure was applied. A continuous stream of bubbles would indicate leaks. The pressure was observed at the beginning and end of a 15-minute period after an initial 5-minute period to allow temperature stabilization of the gas.)

4. Engagement and disengagement of all quick-disconnect couplings, five successive times with hoses pressurized to 600 psig. (A requirement for wearing diver's gloves during this test was waived.)

Test Results and Analysis

Examination. Fifty gas hose end fittings, Military Standard MS28740-5, were installed on the 16 primary umbilicals and nine secondary umbilical gas hoses. A Samuel Moore and Company representative performed the installation at DSSPTO. All parts fit satisfactorily and were clean.

Six each of the new quick-disconnect valved couplers and nipples (each group serialized with numbers 1 through 6) and 22 each of the coupler and nipple adapters, were received from Snap-Tite Inc., factory-cleaned and

in sealed packages. NCEL delivered these items to DSSPTO for assembly and test. Although the manufacturer had stated that the adapters and necessary O-rings could be readily installed in the old 3847-2 couplers and 3847-3 nipples to convert them, respectively, to 3847-8 couplers and 3847-9 nipples, SEALAB III personnel found that their existing maintenance tools were unsuited for installing the O-ring sets and for machining one special O-ring from each set after installation. Consequently, all the old couplers and nipples (except four of each reserved for aquanaut training) and all the new adapters were taken by an aquanaut from DSSPTO to Snap-Tite Inc. at the direction of DSSP. The aquanaut observed the assembly work at the manufacturer's plant, obtained tooling so that similar work could be done at DSSPTO, and returned to DSSPTO with the modified assemblies. Snap-Tite put new serial numbers on each assembly, alongside the old number which was parenthesized. The numbering (of 18 couplers and 17 nipples) proceeded as follows: each group was placed in the original serial number sequence, with some gaps in the numbering, then the new numbers 7 through 24 were added to the couplers and 7 through 23 to the nipples.

DSSPTO modified the four couplers and four nipples that had been held for training and one other nipple, but did not renumber them. These still had the old 3847-2 and 3847-3 part number identification and old serial number. DSSPTO installed the quick-disconnects on the umbilicals and advised NCEL that tests could be made. However, by the time the tests were scheduled, two sets of the quick-disconnects together with two MK VIII breathing apparatus had been sent to the Azores for possible use in salvage of the submarine ***SCORPION.*** Other quick-disconnects had been misplaced. Table 2 lists the serial numbers of quick-disconnects available for testing.

Twenty shuttle valve inserts, part number 25182B with AND10050-5 specification threads, received from Circle Seal Products Company (factory-cleaned and in sealed packages), were installed in the shuttle valves by DSSPTO.

Proof Pressure Test. All couplers and nipples were designed to be interchangeable. For the tests, the parts were paired as they became available on a schedule that did not interfere with available diver training. However, some parts were at San Francisco Bay Naval Shipyard, two sets were at the Azores or in transit to DSSPTO, and some others were misplaced; these units were not tested (see Table 2). The coupler and nipple pairs were tested to 3,000 psig in the engaged position only. Test of the couplers to 3,000 psig when disengaged was waived by DSSP.

Following the testing and after some usage experience, 10 of the couplers were returned to the factory for repairs at which time the two-part serial numbers were made three-part. The couplers were not tested following repair. Table 2 reflects these number changes and the test status as of May 1969.

Table 2. Status of Testing Program

(As of May 1969.)

Shuttle Valve Serial Number	Quick-Disconnect Nipple (to shuttle valve)				Quick-Disconnect Coupler (to umbilical)				Gas Hose Umbilical Serial Number
	Original Serial Number	New Serial Number	Tested Satis-factory	Not Tested	Original Serial Number	New Serial Number	Tested Satis-factory	Not Tested	
	Part Number 3847-9				Part Number 3847-8				
	–	5	X		–	2/32	repaired	X	
	–	6		X	–	3/38	repaired	X	
9	(3)	7(3)	X		–	5	X		7
12	(5)	8(5)		X	–	6/39	repaired	X	R3
17	(6)	9(6)	X		(2)	7(2)	X		5
10	(8)	10(8)	X		(3)	8(3)	X		R1-600
15	(9)	11(9)		X	(5)	9(5)40	repaired	X	R2-600
–	–	12		X	(7)	10(7)41	repaired	X	
4	(17)	13(17)	X		(11)	12(11)43	repaired	X	
6	(19)	14(19)		X	(12)	13(12)42	repaired	X	
19	(20)	15(20)	X		(13)	14(13)	X		3-600
14	(21)	16(21)		X	(14)	15(14)	X		13
5	(24)	17(24)	X		(15)	16(15)	X		4
7	(25)	18(25)		X	(16)	17(16)44	repaired	X	R1
13	(26)	19(26)	X		(17)	18(17)	X		
11	(28)	20(28)	X		(20)	19(20)		X	11
–	(30)	21(30)		X	(22)	20(22)	X		12
					(23)	21(23)	X		
					(26)	22(26)	X		R6
	Part Number 3847-3								
1	2		X		(28)	23(28)	X		
16	4		not avail	X	(30)	24(30)	X		
2	28		not avail	X	18	18/45	repaired	X	
8	29		X			31/46	repaired	X	
					Part Number 3847-2				
3	33		X		18		X		2-600
					24			X	10

It has been indicated that other couplers which were originally tested satisfactorily should be returned for repairs following usage. These should receive new serial numbers at that time and should be retested.

Operational Test—Quick-Disconnects. All quick-disconnect couplings available were engaged and disengaged five successive times with a gas pressure of 600 psig in the hose. In general, all fittings passed the 3,000 psig test; a few failed the disconnect test at 600 psig. These units were returned to Snap-Tite Inc. for reworking of the O-ring seals.

Conclusions

The gas hose fittings will work effectively at the required working pressures, if they are handled and operated with reasonable care. All leaks encountered were traced to defective O-rings and, in particular, to urethane O-rings that were machined after installation.

Recommendation

Replacement and machining of the special urethane O-ring should be accomplished only at the Snap-Tite Inc. factory.

SUMMARY

Discussion

The use of diver's composite life support umbilicals (and habitat logistic support umbilicals) presents unique problems. The diver umbilicals must be designed in such a manner as to provide either neutral or only slight negative buoyancy.

If the umbilical is long and positively buoyant, it may become entangled or may tend to pull the diver above his permissible depth range. While floating off the bottom and subject to underwater currents, the umbilical will expose the diver to forces created by drag, the amount of which will depend upon the sail area presented and the flow rate of the ocean current. A long floating umbilical also may interfere with other equipment in the area.

Sail area presented by an umbilical is dependent upon several factors including life support provided to the diver, length of the umbilical, degree of buoyancy provided, the materials incorporated to attain the buoyancy, and the degree of compressive deformation at various depths. Umbilical

length affects sail area, relative to frontal area and to design considerations, because of line losses in both the breathing-gas hose and the electrical circuits. Longer circuits require heavier gage conductors.

Effects of compressive deformation should be a prime consideration in operations with composite umbilicals. The corrosive nature and electrical conductivity of seawater makes the sealed integrity of the umbilical jacketing mandatory. The requirements for flexibility, near neutral buoyancy, and multiple conductors result in a sheathed bundle which usually includes voids. Since the umbilicals are fabricated at a one atmosphere pressure, these voids and any resilient materials used will be affected by compressive forces.

An umbilical designed to be only slightly negatively buoyant near the surface will become progressively heavier as it is taken to increased depths. This is of concern to the diver since his capabilities are reduced with depth. A heavy umbilical would require an inordinate amount of diver capability just for towing.

A second and equally important consideration is the effect of the compressive deformation of the voids within an umbilical, when the umbilical is subjected to a simultaneous range of depth, such as when reaching from the surface of a water body to the bottom or from a habitat to an underwater canyon work site. In such an instance, the encapsulated air will be subjected to the differential in the water head. The full effect of this differential will be exerted internally upon that portion of the umbilical sheath which is at the highest elevation. Umbilical sheath design must either take this factor into consideration or limits must be placed upon the simultaneous range of depth permitted for umbilicals of a given design.

A problem closely associated with the encapsulated air considerations discussed above is that of the potential results of exposing sealed umbilicals to various gases under ambient pressures of ocean depths. The implications are evident in Appendix D (results of a study of permeability rates of several gases through films of several materials). An umbilical containing voids, sealed at one atmosphere of pressure or subjected to gases at greater pressures, then moved or extended to areas of reduced pressure, may rupture due to the expansion of the ingested gas.

General Observations

1. The original primary umbilicals had many deficiencies which proved impractical to overcome, therefore, these umbilicals were dropped from the program.

2. The secondary umbilicals also suffered many failures. These failures were generally associated with circuit discontinuities and low insulation resistance.

3. The second generation primary umbilicals suffered principally from low insulation resistance.

4. The modified second generation primary umbilicals met the test requirements.

5. Difficulties associated with diver's breathing-gas hoses were related to the connector fittings.

6. Electrical connectors were a major source of difficulty.

7. A nonconducting lubricant was used on the male and female electrical connector parts to aid the mating. However, because of rough handling of the umbilicals in service, the liberally applied lubricant picked up sand, fabric threads, small metal fragments, and other deleterious materials. Some of this material was inadvertently pushed into the pin holes of several connectors and contributed to connector problems.

8. During all phases of testing and operational use of the umbilicals and associated equipments by diving personnel, it was observed that all items were subjected to rough handling and frequent association with potentially hazardous situations. Because of the equipment bulk, restricted available test facilities operating space (i.e., aboard ship, etc), and lack of specially designed handling and storage equipment, the diver's life support equipments commonly were layered out in areas subject to heavy foot traffic, etc. It is also probable that familiarity with the equipment, because of experience in the use of it, resulted in a relaxed awareness of ultimate consequences of careless housekeeping practices and equipment handling procedures.

9. Umbilical sheathing materials suffered abrasive damage, and one umbilical suffered a penetrating cut when drawn against a piling fouled with marine growth.

General Conclusions

1. There is justification for a research and development effort in the bonding of polyurethane to neoprene and for field repairs requiring bonding of polyurethane to polyurethane.

2. Quality control in the fabrication and assembly of underwater electrical connectors is a vital factor in obtaining satisfactory field results.

3. Where possible, underwater electrical connections should be made and maintained in a gaseous medium rather than under water-flooded conditions.

4. Use of multiple electrical breakouts with individual connectors results in fewer deficiencies than use of multicontact connectors.

5. The use of many strands of dead soft copper for electrical conductors results in fewer discontinuities caused by flexing fatigue.

General Recommendations

It is recommended that:

1. A research and development program be initiated for diver's electrical umbilicals to produce:

a. Suitable connectors
b. Suitable conductor materials and wire filament sizes
c. Suitable shielding
d. Suitable means of joining conductors to connectors
e. Suitable materials for exterior umbilical sheathing
f. Suitable methods of offsetting negative buoyancy
g. Suitable bonding techniques for ensuring insulation integrity

2. Umbilicals sent to or removed from a sea bottom work site be coiled for transporting to reduce the possibility of damage caused by internal pressures due to a great water head differential between the upper and lower portions of the exposed umbilical.

3. A strong and continuing training effort be instituted to ensure diver awareness of the comparatively fragile nature of much of the vital life support equipment.

4. Strong quality control programs be enforced during fabrication of all life support equipment.

Appendix A

SEALAB III—ATMOSPHERIC CONTAMINATION BILL

(Provided by Deep Submergence Systems Project Office— unedited)

1. The purpose of this bill is to alert all personnel associated with SEALAB type structures to the importance of controlling atmospheric contamination, particularly those items which present a toxicity hazard.

2. In SEALAB, inhalation of contaminated air is by far the most probable means by which toxic substances will gain entry into the body. This is of increasing importance, when one considers that at normal atmospheric pressures, an individual under conditions of moderate exertion will breathe about 10 cubic meters (10,000 liters) of air in eight hours, or approximately 30,000 liters per day.

3. Although general ground rules have not been necessary for early manned undersea dwellings, relative to various items which may be introduced into the structure, this philosophy can no longer be considered valid. With increasing periods of prolonged submergence at greater sea pressures, and with longer period of habitat submergence, it is essential that careful consideration be given to minimizing toxicity hazards within any manned undersea dwelling.

4. The capacity for removal of air contaminants which can be built into manned undersea dwellings and small vehicles is extremely limited. In SEALAB III, contamination control is limited to: (1) carbon dioxide removal with Lithium Hydroxide, or a molecular sieve system; (2) activated charcoal for removal of some contaminants; (3) removal or conversion of certain other hydrocarbons via catalysis. In this regard, it must be remembered that none of these systems will remove all possible contaminants. Furthermore, in the case of charcoal, it is capable of selective absorption. Selective absorption simply means that it may release one substance previously absorbed in exchange for another; therefore, it is possible that a toxic substance absorbed early in a bottomed dwelling may reappear later as this exchange takes place.

5. In manned undersea dwellings, paints and adhesives may be one of the largest offenders. It is mandatory that the following principles which have been set down for nuclear submarines be adopted for the future dwellings and vehicles:

a. All major painting be accomplished at least thirty days prior to manning, and that any touch-up painting with oil-based paints be accomplished no less than 15 days prior.

b. If it is necessary to paint interiors with less than thirty days remaining, water base paints shall be used in lieu of chlorinated rubber-based paints.

c. No painting of any sort shall be done within seventy-two hours of manning.

6. Previous studies have revealed many sources of contamination produced by the systems and materials involved and by the men. Examples of general types of material contaminant sources are:

- Surface coatings
- Plastic films
- Wire insulation
- Thermal insulation
- Cords of synthetic and natural fibers
- Molded and cast plastic components
- Adhesives
- Electronic encapsulation compounds
- Electrical insulation boards
- Elastomers in gaskets, sealants, and moldings
- Silicones and organic lubricants and fluids
- Metallic dust and oxides
- Casting compounds
- Ozone emitting electronic or electrical equipment
- Tapes
- Reinforced and unreinforced plastic structural materials
- Papers
- Inks

Many of these, when exposed to the atmosphere, lose solvents, plasticizers, and unpolymerized materials by volatilization and, at some elevated temperature, all will oxidize and degrade in the atmosphere. In a closed environment, these gas-off products may accumulate to constitute a toxic hazard.

7. An additional hazard is represented by the physicochemical dangers of flammable or explosive contaminants. Work in this field has been done to determine the effects of elevated pressure and/or increased concentrations of oxygen and it has been found that the dangers are dramatically increased under those conditions. It is therefore essential that materials known to have any flammable or explosive properties be eliminated insofar as possible. Fire retardant materials have been found readily combustible under the high pressure/high oxygen condition and those materials whose reaction under those conditions is not known must be tested before introduction into the habitat. Harmful effects under each of the conditions and for each of the types of

contamination previously discussed may be assumed, in most cases, to be related both to time of continuous exposure and to the synergistic or additive effect from certain combinations of contaminants.

7. The following list encompasses materials with known deleterious effects that can quite readily be excluded from hyperbaric chambers:

Mercury
Substances containing residual chlorinated hydrocarbons
Arsine, stibine, and hydrogen producing batteries
Radioactive hazards
Organic materials that are volatile or easily decomposed (as paint solvent, thinners, adhesives or glues)
Tricresyl phosphate hydraulic fluids
Low melting waxes
Impure breathing gases (may contain aliphatic and olefinic hydrocarbons)
Freon or butane propellants
Highly plasticized vinyl compounds
Aersol bombs (Freon)
Cooking of fats and greases (acrolun)

8. The following materials should be avoided where possible, but since they cannot in all cases be avoided, they shall be the subject of a request for approval from the Officer in Charge, Deep Submergence Systems Project Technical Office. In addition to identification of the materials, statement of its toxic characteristics, listing of its side effects, and statement of why it must be used, the request should also include the results of tests which establish how the material may be treated to render it less harmful or inert. Examples of such processes are: advance application to allow termination of toxic gas release prior to personnel occupancy, aging in elevated temperatures to drive off toxic gases, and so forth. In addition, the results of tests involving exposure of the material at elevated temperatures as well as actual burning, showing the toxic products driven off by thermal decomposition or combustion, shall be included.

Aldehyde producing materials (as certain phenolformaldehyde resins)
Aliphatic-aromatic hydrocarbon producing paints, thinners and other materials
Glycol producing paints (in general, water-based methacrylate or polyvinyl acetate paints are better than oil-modified alkyds, phenolics or vinyl lacquers)

Methanol produced from duplicating process paper
Ammonia produced from reproduction paper (as blueprints)
Phosphorous compounds from lubricants
Carbon disulfide producing foam rubbers
Sulphur producing lubricants
Organic compound bound insulating materials (as glass wool and asbestos)
All equipment under categories listed previously as general types of material sources of contamination
All flammables; such as wood, cloth, paper, and rubber
All heat or spark producing equipment; such as motors, TV cameras, switches, instruments, and wiring.

9. All equipment which, because of inherent void spaces presents a potential hazard from explosion or implosion; unless the voids may be eliminated, adequately vented to the surrounding atmosphere, or sealed to withstand effects of the pressure, and/or to eliminate leakage of gases to or from the voids.

10. To these categories of materials which are toxic or otherwise hazardous to some degree and which must, therefore, be excluded entirely or avoided insofar as possible, should be added certain materials which might prove objectionable in the closed chamber environment because of objectional odor. Certain Teflon tubing has been found to fall in this category.

11. In addition to allowing sufficient time for curing and off-gassing of production materials prior to system use, any solvents used in cleaning must be removed. For example, oxygen systems cleaned with Freon PCA to remove foreign matter must be carefully purged with oil-free nitrogen and then evacuated prior to use for breathing.

12. In order to minimize the possibility of toxic substances being introduced into the atmosphere of SEALAB III, the following control procedures will be instituted:

a. Nothing shall be introduced into the habitat without prior notice to the Atmosphere Control Officer who shall review the item for contaminants. All items of equipment, both professional and personal, shall be reviewed and approved for stowage and use aboard the SEALAB III.

b. A careful log of all items intended for use within SEALAB III shall be maintained by the Atmosphere Control Officer.

Appendix B

SEALAB III—AQUANAUT SAFETY CERTIFICATION PROGRAM PROCEDURE 202C - UMBILICAL CORD AND DIVER'S ELECTRICAL HARNESS ASSEMBLY

(Provided by Deep Submergence Systems Project Office—
with minor editing)

UMBILICAL CORD AND DIVER'S ELECTRICAL HARNESS ASSEMBLY

NORTHROP NORTRONICS	SEALAB III AQUANAUT SAFETY CERTIFICATION PROGRAM	Procedure 202 Revision A Revision B Revision C	17 May 67 July 67 Oct 67 16 Feb 68

1.0 OBJECT OF TEST

To verify that the test specimens meet the electrical test requirements specified herein and are safe for use with the MK VIII Breathing Apparatus. Tests in addition to those specified herein are required to verify safety compliance at the component and system level (Reference 2.1, 2.2, and 2.9).

2.0 REFERENCE DOCUMENTS

2.1 Umbilical Cord and Fittings, Test Procedure 201A

2.2 Diver's Electrical Harness, Test Procedure 101A

2.3 Procurement Specification, EDU: RSC 7000, 3 March 1967, Composite Life Support Umbilical

2.4 Snap-Tite Inc., Drawing 3847, Quick Disconnect Coupling

2.5 Electro Oceanics, Inc. Catalog SFC-3

2.6 MK VIII Component Cleaning Procedure 401A

2.7 MIL-STD-202C, Test Methods for Electronic and Electrical Component Parts

2.7.1 MIL-W-76B Wire and Cable, Hookup, Electrical, Insulated (C)

2.8 Material Certification Procedures and Criteria for Manned, Non-Combatant Submersibles

2.9 System Acceptance Test Procedure 302A

3.0 TEST SPECIMEN

Subject 100% of the following specimens to the tests in this procedure

3.1 UMBILICAL CORD ASSEMBLY

1) Samuel More and Company, Gas Hose and Electrical Cable
2) Electro Oceanics, Inc., Electrical Connectors, Part Nos. 51B24F and 53B24M

3.2 DIVER'S ELECTRICAL HARNESS

1) Terminal Block, QN1264-1 (includes Multi-Breakout Connector, Part No. 51B24F)
2) Connector to pO_2 Sensor, Part No. 52F4F
3) Connector to Diver's Light, Part No. 52E2F
4) Connector to Earphones, Part No. 51F2F
5) Connector to Microphones, Part No. 52F4F
6) Connector to Heater Pump, Part No. 51E4F-LSN
7) Cable - Interconnecting Multi-Breakout Connector to Diver's Equipment Connectors

4.0 TEST REQUIREMENTS AND ACCEPTANCE CRITERIA

The equipment may be submitted for acceptance when the requirements specified below have been met. All discrepancies shall be recorded and the Project Officer notified. Failed equipment shall be identified and dispositioned by the Project Officer or his designee.

4.1 DC RESISTANCE

When tested as specified in 6.2, there shall be no discontinuity between contacts in Connector 51B24F and corresponding contacts in the appropriate harness connector. The DC resistance shall not exceed the values calculated from Table B-1.

EXAMPLE:

a) Length of umbilical cord = 300 feet

b) Heater pump supply wire consists of one (1) stranded conductor size AWG-10

c) From Table B-1 the maximum resistance per 1,000 feet = 1.27 ohms

d) Therefore, the maximum resistance per 300 feet is:

$$R_{max} = 300 \times \frac{1.27}{1,000} = 0.381 \text{ ohm} = 381 \text{ milliohms}$$ (C)

e) If more than one wire is used in parallel in the supply cable, divide the resistance value shown in Table B-1 by the number of wires and proceed with the calculation in (d).

(NOTE: Shield leads no. 20 gage shall show no more than 3 ohms and 8 ohms on the 200 and 600-foot umbilicals, respectively). (C)

TABLE B-1

WIRE SIZE	MAXIMUM RESISTANCE AT 20°C* (OHMS/1,000 feet)
AWG no. 20	13.12
AWG no. 18	7.89
AWG no. 16	4.97
AWG no. 14	3.13
AWG no. 12	1.92
AWG no. 10	1.27

(C)

* Values taken from Reference 2.7.1, Table 2, Page 4.

4.2 DIELECTRIC WITHSTANDING VOLTAGE

When tested as specified in 6.3, the umbilical and electrical harness assemblies shall show no evidence of breakdown or flashover between any pair of contacts and between the copper rod and any contact.

4.3 INSULATION RESISTANCE

When tested as specified in 6.4, the insulation resistance shall be greater than 100 megohms.

4.4 SHIELD CONNECTIONS

All shields shall be connected as shown by correlation drawing D80064 800-2654257. (C)

5.0 TEST EQUIPMENT AND SETUP

The test setup shall be photographed and prints included with data sheets.

a. Dielectric Test Instrument, Hermetronics MDL573 or equivalent (DC Test Equipment acceptable)

b. Copper Rod, approximately 6 inches long, 1/8-inch-diameter

c. Megohmmeter, General Radio Company, Model 1862C or equivalent

d. Milliohmmeter-Keithley Model 502 or equivalent

e. Dummy Receptacles and Cables to mate with connectors on harness

6.0 SUGGESTED TEST PROCEDURE

6.1 CONDITIONS

Unless otherwise specified, examinations or tests shall be performed at room ambient conditions. (Procedure 6.3 of TP 101 shall be performed prior to the following tests.) (C)

6.2 DC RESISTANCE

Connectors shall be mated as shown in Figure B–1. DC resistance measurements shall be performed between each contact in connector 51B24F and the corresponding contact in the appropriate harness connector. Continuity tests on shield pins 1, 2, and 3 shall be made from connector - 51B24F to 51B24M-1. (C)

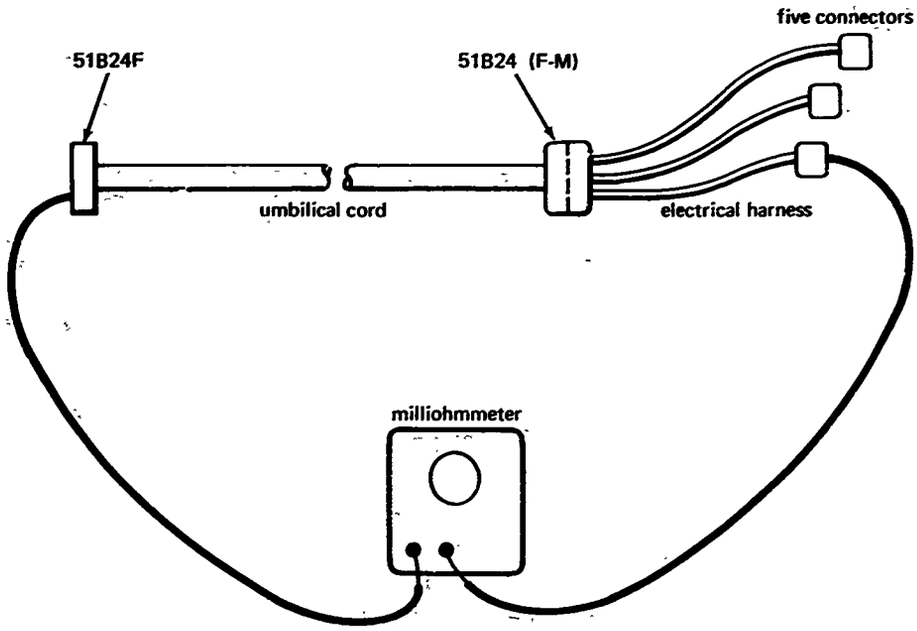

Figure B-1. DC resistance test setup.

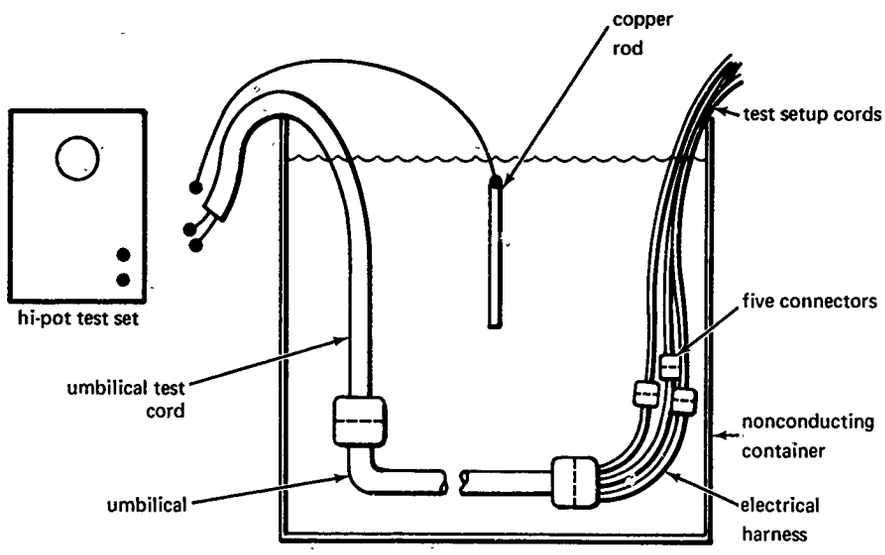

Figure B-2. Dielectric withstanding voltage test setup.

6.3 DIELECTRIC WITHSTANDING VOLTAGE

Umbilical cord and electrical harness assemblies shall be installed in the test setup shown in Figure B-2. The assemblies shall be placed in a suitable bath of conductive water. The water conductivity shall be assured by the addition of at least five percent sodium chloride by weight. The dielectric test shall be performed in accordance with MIL-STD-202C Method 301. A dielectric withstanding test voltage of 1450 + 50 VDC shall be applied for 60 seconds between test points as shown in the following table. (C)

Test	Potential No. 1	Potential No. 2
1	All Pins in Connector 51B24F	Copper Rod in Water
2	Pin 4	All Other Pins + Rod
3	Pin 5	"
4	Pin 6	"
5	Pin 7	"
6	Pin 8	"
7	Pin 9	"
8	Pin 10	"
9	Pin 11	"
10	Pin 12	"
11	Pin 14	"
12	Pin 15	"
13	Pin 16	"
14	Pin 17	"
15	Pin 18	"
16	Pin 19	"
17	Pin 20	"
18	Pin 21	"
19	Pin 22	"
20	Pin 23	"

(Do not apply voltages between shield pins 1 to 2, 1 to 3, or 2 to 3.)

The test voltage shall be raised from zero to full voltage at a rate of 100 to 500 volts per second. Leakage current shall be limited to 0.1 milliampere. (C)

CAUTION: TEST PERSONNEL SHOULD AVOID PHYSICAL CONTACT OF THE HIGH POTENTIAL LEADS WHEN APPLYING TEST VOLTAGES.

6.4 INSULATION RESISTANCE

Insulation resistance of mated connectors and interconnecting cables shall be measured as specified in MIL-STD-202C Method 302, Test Condition B. The resistance shall be measured between each of the test points shown in the table in Paragraph 6.3.

6.5 SHIELD CONNECTIONS

C

Test for the connection of the umbilical oxygen sensor lead shield to pin 13 of umbilical connector 51B24M1 by measuring capacity between pin 13 and pins 9, 10, 11, and 12. The exact value of capacity, consisting of measurement between specimens, need not be determined, however, it should be noted as an indication of proper internal connection.

Test for continuity of the pO_2 shield in the electric harness between pin 13 of connector 51B24F and pin 1 of connector 52F4F.

Test for connection of the communication shields by measuring the capacity between the following pins in the electric harness connector 51B24F:

Pin 3 to 1
Pin 3 to 2

Appendix C

SEALAB III—AQUANAUT SAFETY CERTIFICATION PROGRAM PROCEDURE 201A - UMBILICAL CORD AND FITTINGS

Northrop Nortronics - July 1967

(Provided by Deep Submergence Systems Project Office—unedited)

1.0 OBJECT OF TEST

To verify that the test specimens meet the proof pressure and operation requirements specified herein and are safe for use in MK VIII Breathing Apparatus. Tests in addition to those specified herein are required to verify safety compliance at the assembly and system level (Reference 2.1, 2.2, and 2.7).

2.0 REFERENCE DOCUMENTS

2.1 Assembly Test, Test Procedure 202A

2.2 System Test, Test Procedure 301A

2.3 Procurement Specification, EDU: RSC 7000, 3 March 1967, Composite Life Support Umbilical

2.4 Snap-Tite Inc., Drawing 3847, Quick Disconnect Coupling

2.5 Electro Oceanics Company, Underwater Connectors, Catalog SFC-3

2.6 MK VIII Component Cleaning Procedure 401A

2.7 System Acceptance Test Procedure 302A

3.0 TEST SPECIMEN

Subject 100% of the following electrical cables and connectors, gas hoses and male and female quick disconnect fittings to the tests in this procedure.

a. Samuel Moore Company, Gas Hose and Electrical Cable, gas hose end fitting 1/4" NPT

b. Snap-Tite Inc., Quick Disconnect Coupling, Part No. 3847

c. Electro Oceanics Company, Electrical Connectors, Part No. 51B24F and 51B24M

4.0 TEST REQUIREMENTS AND ACCEPTANCE CRITERIA

The equipment may be submitted for acceptance when the requirements specified below have been met. All discrepancies shall be recorded and the Project Officer notified. Failed equipment shall be identified and dispositioned by the Project Officer or his designee.

4.1 EXAMINATION

When examined as specified in 6.2.1, connectors, fittings, gas tubing and electrical cables shall meet the design and dimensional requirements of the applicable drawing or specification. There shall be no evidence of poor molding or fabrication; damaged, loose, or improperly assembled connector contacts; peeling or chipping of the plating and finish; nicks and burrs to metal surfaces.

4.2 PROOF PRESSURE

When tested as specified in 6.3, the specimens shall show no evidence of damage or permanent deformation. There shall be no evidence of gas leakage.

4.3 OPERATION - QUICK DISCONNECT

When tested as specified in 6.4, the quick disconnect couplings shall engage and disengage with relative ease and without jamming. There shall be no evidence of damage.

4.4 OPERATION - ELECTRICAL CONNECTORS

When tested as specified in 6.5, connectors shall engage and disengage with relative ease and without jamming. Connectors shall be examined for damage caused during test, such as deformed pins, galled plating on pins, damage around socket entry, etc.

5.0 TEST SET-UP AND EQUIPMENT

All test set-ups shall be photographed and prints included with data sheets.

5.1 TEST SET-UP

Figure C-1c shows the test set-up configuration.

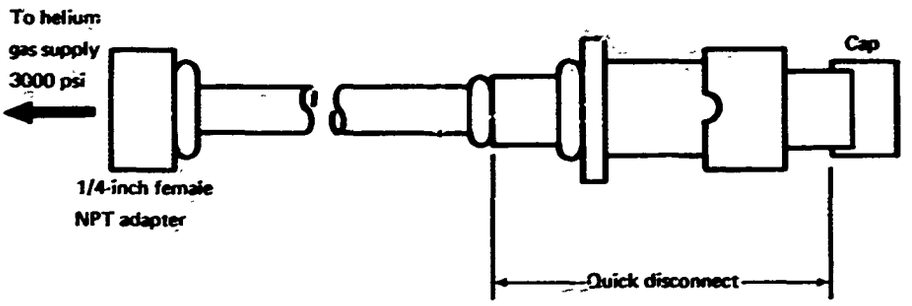

Figure C-1a
Quick Disconnect Engaged

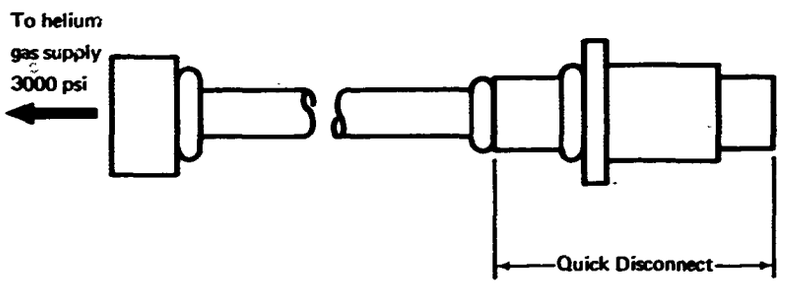

Figure C-1b
Quick Disconnect Disengaged

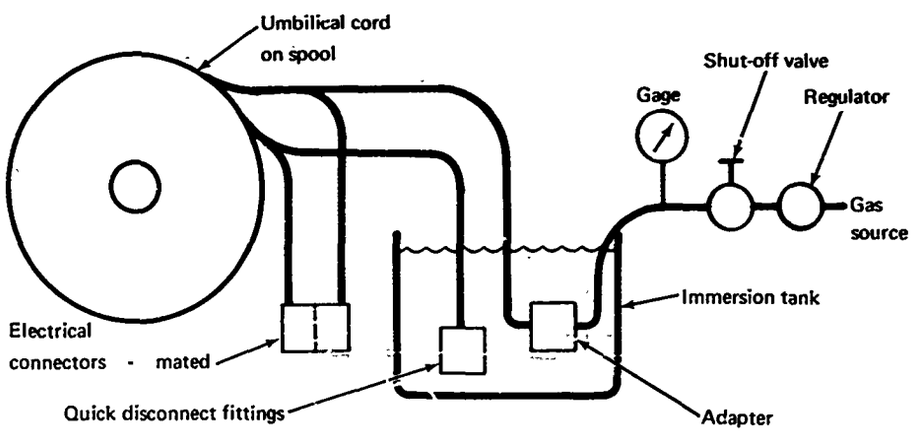

Figure C-1c
Immersion Test Set-up

5.2 TEST EQUIPMENT

The following equipment will be required to perform the tests in this procedure.

a. One-fourth inch female NPT swivel fitting

b. One-fourth inch female NPT high pressure cap

c. Immersion tank

d. High pressure gas supply

e. Regulator

f. Shut-off valve

g. 3000 psig gage

6.0 SUGGESTED TEST PROCEDURE

6.1 CONDITIONS

Unless otherwise specified, examinations or tests shall be performed at room ambient conditions.

6.2 EXAMINATION AND CLEANING

6.2.1 Examination

Examine the gas couplings, electrical connectors, hoses and cables, and piece parts to ensure conformance with the applicable drawing for materials design and construction, identification, finish and workmanship.

6.2.2 Cleaning

Clean the hoses and fittings and test plumbing in accordance with the MK VIII Component Cleaning Procedure 401. Clean the connectors by washing with clean alcohol and scrubbing parts with a small bristle brush. Blow excess alcohol dry with dry air. Caution: Keep open flames away during cleaning.

6.3 PROOF PRESSURE

Subject all the umbilical hoses and quick disconnect fittings to be used for SEALAB III operations to the proof tests of Paragraphs 6.3.1 and 6.3.2. If no bubbles are observed and no pressure decay occurs during

the 15 minute holding period, the hoses and fittings will be considered leakproof and safe for use in SEALAB III operations.

6.3.1 Engaged

a. Couple the coupler and nipple halves of the quick disconnect to the umbilical cord, as shown by Figure C-1a.

b. Set up the specimens for test, as shown by Figure C-1c. Keep the electrical connectors mated and protected from the water.

c. Pressurize the system to 3000 psig and leave the supply valve open for five minutes to allow temperature stabilization.

d. Close the supply valve for 15 minutes.

e. Observe the water surface for continuous stream of bubbles, indicating leaks at the fittings.

f. Record the pressure in the system at the beginning and end of the 15 minute period.

g. Release the pressure.

6.3.2 Disengaged

Remove the quick disconnect nipple, as shown by Figure C-1b, immerse the uncoupled coupler, and repeat steps c through g of Paragraph 6.3.1.

6.4 QUICK DISCONNECT OPERATIONAL TEST

Engage and disengage all quick disconnect couplings five successive times with 600 psig on the umbilical hose. Wear gloves of the type to be used with the MK VIII diving system during the operation test to simulate use conditions.

6.5 ELECTRICAL CONNECTOR OPERATION TEST

Engage and disengage all electrical connectors five successive times while wearing diver's gloves of the type to be used during SEALAB III operations.

Appendix D

PERMEABILITY RATES OF CERTAIN GASES THROUGH MEMBRANES OF CERTAIN POLYMERS

by

Samuel Moore and Company*

"When small molecules permeate through a polymer membrane, the rate of permeation can be expressed by parameters which may be characteristic of the polymer. The general concept of the ease with which a permeant passes through a barrier is often referred to as "permeability." The coefficient, P (permeability), has the dimensions:

$$P = \frac{\text{(amount of permeant) (film thickness)}}{\text{(area) (time) (pressure-drop across the film)}}$$

Tests were run using oxygen, nitrogen, carbon dioxide and helium at different temperatures. The numbers quoted represent the coefficient, P."

GAS	MATERIAL	73°F	150°F
OXYGEN	Sea Lab Urethane	0*	56.0
	Sea Lab Nylon	0	9.0
	Neoprene (as comparison)	23.0	190.0
NITROGEN	Sea Lab Urethane	0	<1
	Sea Lab Nylon	0	0
	Neoprene (as comparison)	0	12.0
CARBON DIOXIDE	Sea Lab Urethane	270.0	495.0
	Sea Lab Nylon	0	0
	Neoprene (as comparison)	380.0	700.0
HELIUM	Sea Lab Urethane	0	30.0
	Sea Lab Nylon	7.0	42.0
	Neoprene (as comparison)	12.0	218.0

*0 = no measured permeability

*Provided by DSSP from a copy of a letter by Mr. C. C. Draucker, Samuel Moore and Company, to Mr. Harry Rueter, DSSP, dated 20 March 1969—rearranged.

DISTRIBUTION LIST

SNDL Code	No. of Activities	Total Copies	
—	1	20	Defense Documentation Center
FKAIC	1	10	Naval Facilities Engineering Command
FKNI	10	10	NAVFAC Engineering Field Divisions
FKN5	9	9	Public Works Centers
FA25	1	1	Public Works Center
—	11	11	RDT&E Liaison Officers at NAVFAC Engineering Field Divisions and Construction Battalion Centers
—	230	230	NCEL Special Distribution List No. 9 for Government Activities interested in reports on Deep Ocean Studies

Unclassified
Security Classification

DOCUMENT CONTROL DATA - R & D

(Security classification of title, body of abstract and indexing annotation must be entered when the overall report is classified)

1. ORIGINATING ACTIVITY (Corporate author) Naval Civil Engineering Laboratory Port Hueneme, Calif. 93041	2a. REPORT SECURITY CLASSIFICATION Unclassified 2b. GROUP

3. REPORT TITLE

AQUANAUTS COMPOSITE LIFE SUPPORT UMBILICALS—SEALAB III

4. DESCRIPTIVE NOTES (Type of report and inclusive dates)

Final; April 1967–June 1969

5. AUTHOR(S) (First name, middle initial, last name)

John J. Bayles and Douglas Taylor

6. REPORT DATE July 1970	7a. TOTAL NO. OF PAGES 66	7b. NO. OF REFS 0
8a. CONTRACT OR GRANT NO. b. PROJECT NO. 64-005 c. d.	9a. ORIGINATOR'S REPORT NUMBER(S) TR-688 9b. OTHER REPORT NO(S) (Any other numbers that may be assigned this report)	

10. DISTRIBUTION STATEMENT

Each transmittal of this document outside the agencies of the U. S. Government must have prior approval of the Naval Civil Engineering Laboratory.

11. SUPPLEMENTARY NOTES	12. SPONSORING MILITARY ACTIVITY Naval Ship Systems Command Washington, D. C. 20360

13. ABSTRACT

The Naval Civil Engineering Laboratory (NCEL) awarded and monitored several contracts for aquanaut composite life support umbilicals and complementary equipment planned for use in the SEALAB III operation. Safety certification testing of the contract items was performed at the contractor's factories and at NCEL. The accepted items were observed in use during SEALAB III aquanaut training sessions and were evaluated as to their potential use in an actual operation. It became evident that there is a need for improvement in the reliability and durability of aquanaut umbilicals. Greater care in the handling and maintenance of life support equipments would result in improved performance.

DD FORM 1 NOV 65 1473 (PAGE 1)

S/N 0101-807-6001

Unclassified
Security Classification

Unclassified
Security Classification

14. KEY WORDS	LINK A ROLE	LINK A WT	LINK B ROLE	LINK B WT	LINK C ROLE	LINK C WT
Life support umbilicals						
Aquanauts						
Sealab III						
Certification testing						
Reliability						
Durability						
Gas hose						
Electrical connectors						
Backpack life support equipment						
Electrical harness						
Permeability rates						
Toxicity hazards						
Breathing gas						
Heating units						
Communications						

DD FORM 1 NOV 65 1473 (BACK)
(PAGE 2)

Unclassified
Security Classification