EPO

File

NOS Oceanographic Circulation
Survey Report No. 7

San Francisco Bay Area Circulation Survey: 1979-1980

Rockville, Md.
November 1985

U.S. DEPARTMENT OF COMMERCE
National Oceanic and Atmospheric Administration
National Ocean Service

NOS Oceanographic Survey Reports

This series of reports presents information on circulation surveys by the National Ocean Service. Normal activity includes measurements of water flow (currents), tides, temperature, salinity, and occasionally other parameters needed for understanding the physical processes. These surveys are made primarily for the Nation's navigational waterways; however, data are also obtained to describe the circulation patterns of estuaries and harbors.

These reports offer information on sampling locations, measurement techniques, processing and analysis routines, data formats, and general information on the survey area. They do not present technical interpretations of hydrodynamics of the areas.

Publications listed below are available from the National Technical Information Service (NTIS), U.S. Department of Commerce, Sills Bldg., 5285 Port Royal Road, Springfield, VA 22161 (703-487-4650). Price varies for paper copy, microfiched available. Order by accession number (in parentheses) when given.

No. 1 Tide and Tidal Current Observations From 1965 Through 1967 in Long Island Sound, Block Island Sound, and Tributaries. Elmo E. Long, January 1978, (PB 283-849).

No. 2 Tampa Bay Circulatory Survey 1963. Demetrio A. Dinardi, August 1978, (PB 299-163).

No. 3 Puget Sound Approaches Circulatory Survey From 1973 Through 1976. Bruce B. Parker and James T. Bruce, August 1980, (PB81 113375).

No. 4 Cook Inlet Circulatory Survey: 1973-75. Richard C. Patchen, James T. Bruce, and Michael J. Connolly, June 1981, (PB81-245-235).

No. 5 New York Harbor Circulation Survey: 1980-81. David R. Browne and Gary Dingle, February 1983, (PB83-228-635).

No. 6 Southeast Atlantic Coast Estuaries, Sapelo Sound to St. Simons Sound, Georgia Circulation Survey: 1980. William A. Watson, January 1984, (PB86-120433).

NOS Oceanographic Circulation
Survey Report No. 7

San Francisco Bay Area Circulation Survey: 1979-1980

Joseph M. Welch, Jeffrey W. Gartner, and Stephen K. Gill
November 1985

U.S. DEPARTMENT OF COMMERCE
Malcolm Baldrige, Secretary

National Oceanic and Atmospheric Administration
Anthony J. Calio, Administrator

National Ocean Service
Paul M. Wolff, Assistant Administrator

Mention of a commercial company or product does not constitute an endorsement by NOAA, NOS, or USGS. Use for publicity or advertising purposes of information from this publication concerning proprietary products or the test of such products is not authorized.

CONTENTS

	Page
Abstract	vii
1.0. Introduction	1
1.1. Survey area and its importance	1
1.2. Circulation survey purposes and benefits	5
1.3. Cooperative agreement with the United States Geological Survey	8
1.4. Details of the San Francisco Bay Area Circulation Survey	9
1.5. Purpose of this report	14
2.0. Current data	16
2.1. Locations of current stations and relevant information	16
2.2. Instrumentation	17
2.3. Data processing	66
3.0. Tide data	73
3.1. Locations of tide stations and relevant information	73
3.2. Instrumentation and installation	82
3.3. Operation and maintenance	89
3.4. Data processing	90
3.5 Tidal Datums and Data Products	92
3.6. Deep-sea tide data	93
3.7. Water-level records	97
4.0. Salinity and temperature data acquired by NOAA/NOS	99
4.1. Locations of salinity and temperature stations and relevant information	99
4.2. Instrumentation and processing	100
5.0. Salinity, temperature, and water quality data acquired by USGS	136
5.1. Locations of stations and relevant information	136
5.2. Instrumentation and processing	136
6.0. Meteorological data acquired by NOAA/NOS and USGS	149
6.1. Locations of meteorological stations and relevant information	149
6.2. Instrumentation and processing	149
7.0. Historical data	154
7.1. Introduction	154
7.2. Current data	154
7.3. Tide data	167
7.4. Temperature and density data	167
Acknowledgements	175
References	176

FIGURES

		Page
1.	Survey area in relation to state	2
2.	General survey area	3
3a.	Current station locations	18
3b.	Current station locations	19
3c.	Current station locations	20
3d.	Current station locations	21
4.	Aanderaa current meter	59
5.	ENDECO current meter	62
6.	Current meter moorings	67
7a.	Tide station locations	77
7b.	Tide station locations	78
7c.	Tide station locations	79
7d.	Tide station locations	80
7e.	Tide station locations	81
8.	Typical tide station installation	86
9.	Illustration of typical bench mark installations	88
10.	Deep-sea tide gage locations	94
11.	Deep-sea tide gage mooring	95
12a.	NOS CTD transects and time series stations	101
12b.	NOS CTD transects and time series stations	102
12c.	NOS CTD transects and time series stations	103
12d.	NOS CTD transects and time series stations	104
13a.	USGS long-term water sampling station locations	138
13b.	USGS long-term water sampling station locations	139
13c.	USGS long-term water sampling station locations	140
13d.	USGS long-term water sampling station locations	141

TABLES

1.	Phases of the San Francisco Bay Area Circulation Survey	11
2.	NOAA Ship McARTHUR	13
3.	Current stations occupied during the San Francisco Bay Area Circulation Survey	22
4.	Manufacturer's specifications for Aanderaa RCM4 current meter	60
5.	Manufacturer's specifications for ENDECO-174 current meter	63
6.	Manufacturer's specifications for Marsh McBirney 585 electromagnetic current meter	65
7.	Tide stations occupied during the San Francisco Bay Area Circulation Survey	74
8.	Manufacturer's specifications for Aanderaa WLR5 water level recorder	98
9.	CTD measurements taken during the spring 1979 field season of the San Francisco Bay Area Circulation Survey	105
10.	CTD measurements taken during the fall 1979 field season of the San Francisco Bay Area Circulation Survey	124
11.	CTD measurements taken during the spring 1980 field season of the San Francisco Bay Area Circulation Survey	127

Page

12. Manufacturer's specifications for Martek, Model TDC, in situ metering system..... 133
13. Manufacturer's specifications for Plessey, Model 9041, CTD profiling system..... 134
14. USGS long-term sample stations in the channel of San Francisco Bay.. 137
15. USGS San Francisco Bay cruise dates..... 142
16. Summary of analytical methods for USGS cruise data..... 146
17. Meteorological stations occupied during the San Francisco Bay Area Circulation Survey..... 150
18. Manufacturer's specifications for Aanderaa meteorological system.... 152
19. NOS historical current stations occupied in the San Francisco Bay Area..... 155
20. NOS historical tide stations occupied in the San Francisco Bay Area..... 168
21. NOS historical temperature and density data..... 174

SAN FRANCISCO BAY AREA CIRCULATION SURVEY

Joseph M. Welch

Circulation Section
Estuarine and Ocean Physics Branch
Physical Oceanography Division
Office of Oceanography and Marine Assessment
National Ocean Service
National Oceanic and Atmospheric Administration
Rockville, Maryland

Jeffrey W. Gartner

Water Resources Division
United States Geological Survey
345 Middlefield Road
Menlo Park, California

Stephen K. Gill

Tidal Analysis Section
Sea and Lake Levels Branch
Physcial Oceanography Division
Office of Oceanography and Marine Assessment
National Ocean Service
National Oceanic and Atmospheric Administration
Rockville, Maryland

ABSTRACT

The San Francisco Bay Area Circulation Survey was a cooperative effort between the National Oceanic and Atmospheric Administration's (NOAA) National Ocean Service (NOS) and the United States Geological Survey (USGS). The data acquisition phase of the survey was conducted during 1979 and 1980, and represents the most comprehensive physical oceanographic investigation of the San Francisco Bay estuarine system to date. Extensive measurements were made of water currents, tides, temperature, and salinity; and various meteorological parameters including wind speed, direction, atmospheric pressure, and air temperature. Deep-sea tide, current-to-wave signal-to-noise, and additional water quality parameters were acquired in addition to the standard circulation survey data. Survey results are presented in the form of tables, figures, and relevant descriptive information about the measurements. NOS data collected in the area prior to this survey are also discussed.

1.0. INTRODUCTION

1.1. Survey Area and Its Importance

"San Francisco Bay and Delta, one of the world's largest estuarine systems, profoundly influences and enhances the economic, climatic, and aesthetic quality of the surrounding urban-suburban region to the great benefit of its 5 million inhabitants. With its strategic location on the coast of central California (figure 1) and its huge natural harbor, San Francisco Bay serves as a major center for commerce and industry and as a gateway to the Far East" (Conomos, 1979).

Throughout this report, the San Francisco Bay area (figure 2) refers to San Francisco, San Pablo, and Suisun Bays; Carquinez Strait; the tidal marshes which surround these bodies of water; and that part of the "Delta" which encompasses the confluence of the Sacramento and San Joaquin Rivers. The area south of Yerba Buena Island is referred to as South San Francisco Bay. The San Francisco Bay area also includes those waters outside of the Golden Gate to the 10 fathom line. This entire region is collectively referred to as the "Bay."

The waters of San Francisco Bay lie within a northerly trending structural depression in the California Coast Ranges Geomorphic Province. The history of the area is characterized by a long record of extensive earth movement and seismic activity. The proximity of the San Andreas, Hayward, and Calaveras fault zones makes this a major concern.

The major source of fresh water entering the Bay is from the San Joaquin - Sacramento River system, which effectively drains the Central Valley of California. Local surface runoff from streams draining the hills surrounding the Bay is minor, and ground water inflow into the Bay is negligible (Pestrong, 1972).

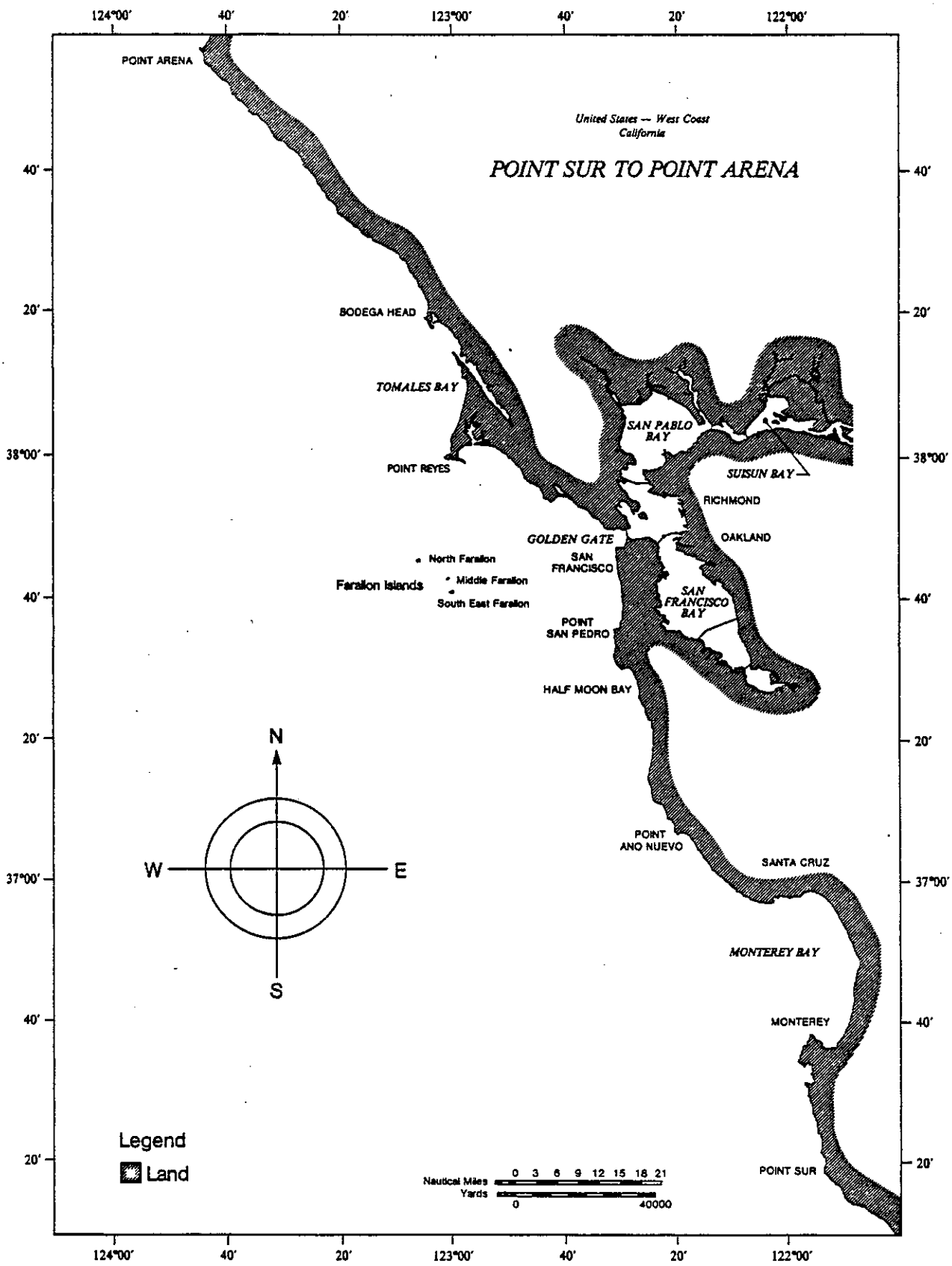

Figure 1. Survey Area in Relation to State

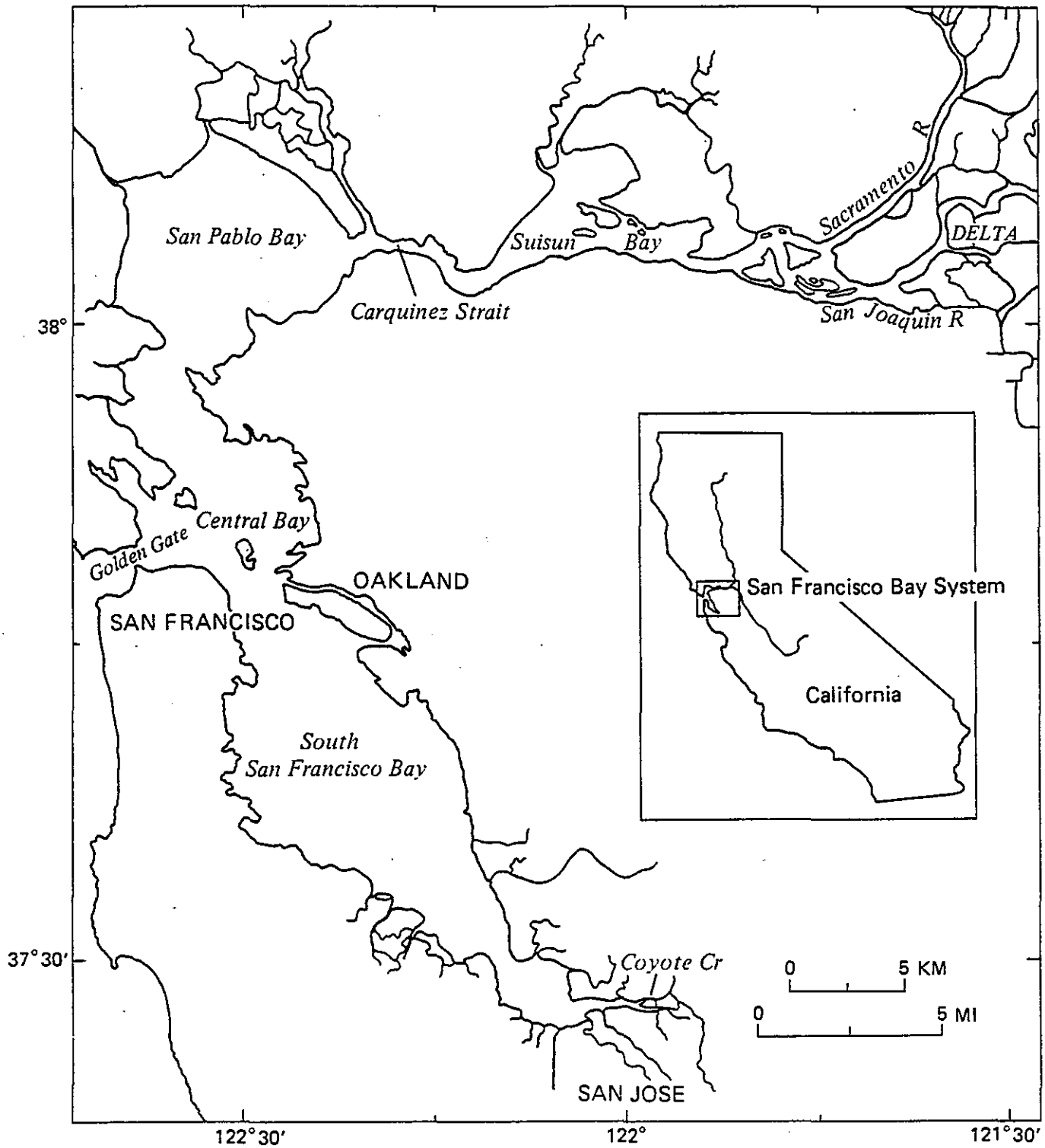

Figure 2. General Survey Area

Water properties within the Bay are characterized by introductions of river water, waste discharges, and exchange of ocean water through the Golden Gate. These waters are mixed by tidal and density currents and by wind. The circulation is driven by tides, basin topography, Delta outflow, and wind. This mixing and circulation determines the flushing ability of the system (McCulloch et al., 1970; Conomos et al., 1971; Conomos and Peterson, 1977; Imberger et al., 1977).

Since about 1850, the Bay has faced increasingly serious environmental pressures. The population of the nine counties comprising the area has increased from 3 million people in 1940 to over 4 million in 1970 and could reach 9 million by 1990 (House Document (H DOC), 1970). San Francisco Bay itself was altered physically by massive sedimentation induced by the development of hydraulic mining in the gold districts. The alteration began in 1853 and ended by judicial decision in 1884 after shoaling the upper arms of the Bay by a few meters (May, 1970). The mining was actually halted because it was destroying agricultural land in the Sacramento Valley. Only casual observations of the Bay's natural history were recorded during the years between the mining, the development of agriculture with extensive irrigation diversions, and the urbanization of the Bay area.

Population growth, commercial pressure, and recreational expansion created the demand for increasing the number of facilities and activities on diked and filled Bay shores. Diking and filling have greatly reduced the Bay's water area and shoreline. Since 1850, the Bay waters which then covered 680 square miles (435,200 acres), have been reduced to less than 400 square miles (256,000 acres). The 340 miles of Bay shoreline have been reduced to only 276 miles, and the 300 square miles of marshlands now total only about 75 square miles (H DOC, 1970). Solid wastes, dredged spoil, sludge, and other materials have devastated thousands of acres of the Bay's marshlands and mud flats, and degraded the quality of the Bay's waters.

"Of all the great estuarine systems of the world, San Francisco Bay and the Delta of the Sacramento and San Joaquin Rivers have been among the last to be critically studied by scientists. Indeed, for many years, this region had

not even been thought of as an estuary, and from the viewpoint of politicians and water engineers, it was not a great natural California phenomenon...., but a hindrance to progress" (Hedgpeth, 1979).

Efforts to study all aspects of San Francisco Bay have increased during the last 25 years, but the term "estuary" was not applied to San Francisco Bay and Delta until the House Subcommittee of Government Operations held its hearings on the "Nation's Estuaries" (Hedgpeth, 1969). Major management decisions which affect San Francisco Bay were made without a sound fundamental understanding of the dynamics of the complex estuarine system.

The San Francisco Bay Area Circulation Survey was a cooperative effort between the National Oceanic and Atmospheric Administration's (NOAA) National Ocean Service (NOS) and the United States Geological Survey (USGS). The circulation study represents the most comprehensive physical oceanographic investigation of the San Francisco Bay estuarine system to date. Prior to this survey, physical data collected in the Bay were often of short duration, questionable quality, and generally regional in nature. In addition to NOAA and USGS, some of the other groups involved in Bay investigations include the U.S. Bureau of Reclamation, U.S. Fish and Wildlife Service, U.S. Army Corps of Engineers, California Department of Fish and Game, California Department of Water Resources, San Francisco Bay Conservation and Development Commission, Association of Bay Area Governments, and numerous area universities.

"While researchers turn toward the Bay as a scientific and political plum,... a purely technical 'turning point' invigorating the effort has been an exhaustive, two-year survey of the Bay's currents and tides,.... The NOS study,.... gives the many agencies studying the Bay 'the first really good set of data in common. Now maybe we can all really start talking about the same things'" (Nichols, 1982).

1.2. Circulation Survey Purposes and Benefits

A circulation survey consists of the acquisition of various physical oceanographic and meteorological data from which an accurate description of water movement can be deduced, along with a theoretical appreciation of its

causes. It includes the measurement of water currents, tides, temperature, salinity, and various meteorological parameters such as wind speed, direction, atmospheric pressure, and air temperature. These measurements are made at numerous locations and depths to obtain a reasonably complete three-dimensional description of these dynamic properties. Tide and current station deployment durations are of sufficient length to allow prediction of the tides and tidal currents by harmonic analysis methods.

Currents are the horizontal water movement resulting from the periodic astronomic tide producing forces, as well as from winds, density differences between water masses, and river runoff. The measured tides are simply the periodic vertical water movement resulting from the same astronomic forces, with some movement also caused by atmospheric pressure and winds. Salinity and temperature measurements are used to determine the density structure of the water masses, which can have significant effects on the currents, as well as on mixing and dispersion processes. Atmospheric measurements are used to correlate nonperiodic water movement with the forcing functions of wind and atmospheric pressure.

Current measurements at each station were at several depths, water depth permitting, to observe density and shear effects. The observation levels through the water column include a near-surface depth, a near-bottom depth, and levels above and below any pycnoclines (ideally). Current stations were deployed at all locations of dynamic importance, which include estuary boundaries, key cross sections, and all other areas necessary to provide a satisfactory spatial distribution of current characteristics. Locations of navigational importance were also covered.

Tide data are essential to understanding the dynamics of an estuary because the dynamics of the entire estuary are generally driven by the ocean tide at the entrance. Nontidal sea level changes (obtained from the data record by filtering techniques) caused by wind and atmospheric pressure also affect estuarine dynamics. Tide stations were placed at the survey limits, at the junction of adjacent water bodies, and along the estuarine boundaries within operational limitations.

Conductivity and temperature profile (CTD) data were obtained to understand and describe density effects on the total circulation of the estuary. CTD casts done in succession along a transect present a cross section of the horizontal density gradient. A series of CTD casts taken at the same location over a tidal cycle presents the temporal variations in the vertical density gradient at that location.

Meteorological stations were spatially located throughout the survey area to obtain accurate regional atmospheric temperature, pressure, and wind field data. The standard height for a meteorological sensor package is 10 meters above chart datum (international standard). The stations were located on or near the water to avoid the frictional effects of land and the orographic effects of hills and surrounding structures.

Several special data sets were acquired for the San Francisco Bay Area Circulation Survey. These data sets include deep-sea tide gage (DSTG), current-to-wave signal-to-noise (S/N), and water level recorder (WLR) measurements. The DSTG, S/N, and WLR efforts are discussed in section 1.4.

The major purpose of this survey was to update the San Francisco Bay area tide and tidal current prediction information in the traditional products of NOS, which can be used by industrial, commercial, military and recreational users. The survey provided a comprehensive oceanographic data set so that scientifically-based decisions can be made to enhance the environment of the Bay area. This survey was planned and executed in cooperation with the USGS to accomplish as much as was operationally feasible in the time allowed to obtain complete data sets that can meet multiple needs. The USGS purposes and benefits are discussed in section 1.3.

The large data sets resulting from this survey have already been utilized by other government agencies, universities, and private firms involved in scientific research, environmental protection, and coastal engineering. The data are also used as input into various numerical-hydrodynamic models.

A fortunate circumstance is that the circulation survey was conducted

while the National Ocean Service California Marine Boundary Program, 1974-1981, was still in progress (NOS, 1982), which provided additional tide data. The main objective of the CMBP is to utilize tidal data to determine tidal datums of sufficient accuracy to delineate marine boundaries and support the NOS Nautical Charting Program. These data are also used to determine land subsidence or emergence, and to aid in shoreline control for ecological purposes.

1.3. Cooperative Agreement with the United States Geological Survey

NOS' previous circulation survey in the San Francisco Bay area took place during 1951 - 1954 (section 7.0.). The survey was extensive in areal coverage, but consisted mostly of short-term current stations. The primary purpose of that survey was to provide tidal current predictions as an aid to navigation. NOS now conducts circulation surveys which are much more extensive and detailed.

Prior to conducting a survey, NOS notifies state and local governments, local universities, and all interested parties of its plans to gain the most benefit from the study. As early as 1975, NOS notified the State of California of its plans to carry out a circulation survey in San Francisco Bay.

Formal coordination planning began in the spring of 1978 at a meeting in San Francisco attended by members of NOS, USGS, and the State of California Water Resources Control Board (Patchen and Cheng, 1979). The State wanted NOS data because of its concern over the effect of sewage disposal on the Bay and its interest in how much the flushing of pollutants from the Bay would be altered by a plan to partially divert the flow of fresh water from the Sacramento River (Peripheral Canal). The State involvement was eventually discontinued, but NOS and USGS continued their cooperative agreement. A description of NOS and USGS roles in the data collection effort are discussed in section 1.4.

Over the last decade, USGS has maintained a special project group in Menlo Park, California, specifically designated to study estuarine dynamics.

USGS's research scientists use San Francisco Bay as an outdoor laboratory to study complicated interactions between physical, chemical, and biological processes which take place in an estuarine environment. Broad goals of the USGS study are to understand the processes and rates by which water, solutes, sediments, and organisms interact; to quantify effects of river inflow, winds, and tides; and to develop and verify various numerical and conceptual models. This program was initiated in 1969 utilizing hand-held sampling devices and bottle samples, and has evolved to a comprehensive, automated, and systematic field sampling and laboratory analytical program.

The NOAA/NOS circulation survey conducted in 1979 and 1980 provided the unique opportunity to increase the circulation, meteorological, and density (water temperature and salinity) data base of NOS and USGS beyond what either agency alone could compile. NOS and USGS capabilities in San Francisco Bay complemented each other. USGS did not have the NOS capability to carry out a large scale circulation survey; therefore, they sought the large data base that NOS could supply. Because the USGS research group is permanently located in the San Francisco area, they were able to supply long-term support enabling NOS to obtain longer continuous data records than is usually possible. The USGS also supplied logistics, personnel, and operational support enabling NOS to expand its efforts.

1.4. Details of the San Francisco Bay Area Circulation Survey

The San Francisco Bay Area Circulation Survey was partitioned into three field seasons during 1979 and 1980. The 1979 field seasons were designated OPR-L827-AR-79 (spring) and OPR-L828-AR-79 (fall), and the 1980 field season was designated OPR-L828-AR-80. In addition to the three field seasons, the USGS maintained several key current stations between the fall 1979 and 1980 field seasons (Break), using a combination of NOS Aanderaa meters and USGS ENDECO meters. During the Break, the USGS also maintained three USGS Aanderaa meteorological stations in addition to two NOS Aanderaa meteorological stations.

Table 1 summarizes the four data collection phases. The purpose of the spring 1979 field season was to collect data over the entire survey area as

defined in section 1.1. These data were acquired for the entire estuarine system to show which sections of the Bay would require a greater concentration of effort during the remaining field seasons. The fall 1979 phase provided data for two separate regions of the Bay. Region 1 included San Francisco Bay proper and the offshore area contiguous to San Francisco Bay. Region 2 included the bays, rivers, and sloughs east of and including Carquinez Strait in the northern portion of the Bay area. The third phase of the survey, Break, represented the time period between the fall 1979 and 1980 field seasons. The USGS maintained four key long-term current stations as well as five meteorological stations to enable continuous data collection while the NOAA Ship McARTHUR returned to Seattle for winter inport. The 1980 phase of the survey provided data for three separate regions of the San Francisco Bay area. Region 1 included the Golden Gate and the offshore area contiguous to San Francisco Bay. Region 2 covered San Francisco Bay south of the Oakland Bay Bridge. Region 3 included San Pablo Bay, Petaluma River, Sonoma Creek, and Napa River. There were also eight long-term current stations and corresponding tide stations, covering the entire area, which were occupied for the duration of the 1980 field season.

Direct USGS operational involvement began during the fall 1979 field season when they installed three additional meteorological stations; reduced the McARTHUR's CTD workload by occupying numerous shallow water stations (using the USGS R/V POLARIS); and provided eight ENDECO current meters to expand current station coverage and provide better near-surface measurements (ENDECO meters respond more accurately in the noisy near-surface environment than the Aanderaa current meters used by NOS on the West Coast). As discussed earlier, during the Break, USGS maintained four current meter stations and five meteorological stations enabling NOS to obtain data series exceeding one year in length. USGS also deployed and maintained several NOS current stations at extreme ends of the survey area. In addition, USGS collected chemical, geological, and biological data (section 5.0.). Section 1.2. stated that several special data sets were acquired for this survey. Two deep-sea tide gage (DSTG) systems were deployed in conjunction with the 1980 Golden Gate and contiguous shelf area phase of the circulation survey. The purpose of these deployments was to collect deep-sea tide data on the continental shelf to study the tidal wave as it propagates across the shelf and enters the Bay through the Golden Gate. In addition, these records will be used to provide

Table 1. Phases of the San Francisco Bay Area Circulation Survey

Phase	Observation Period	General Area	Current Stations	Tide Stations	NOS CTD* Stations	Meteorological Stations
Spring 1979	02/05/79 - 05/04/79	Entire Bay Area	32	23	800	1
Fall 1979	09/10/79 - 12/07/79	San Francisco Bay (Proper) Contiguous Shelf Area Carquinez Strait Suisun Bay Delta	53	23	267	4
Break	12/07/79 - 04/01/80	Key Long-Term Locations	4	16		5
1980	04/01/80 - 12/04/80	Long-Term Locations Golden Gate and Contiguous Shelf Area South San Francisco Bay San Pablo Bay	57	16	540	6

* Total NOS conductivity and temperature vertical profiles; the actual locations correspond with the current station locations.

offshore tidal zoning for future hydrographic surveys, and as input into various hydrodynamic circulation and tidal models (section 3.6.).

Stations CT1, CT2, and CT3 (section 2.1.) were bottom mounted with Aanderaa tide gages and Aanderaa current meters. The Aanderaa tide gages are water level recorders (WLRs), section 3.7., which were used in conjunction with the DSTGs and control tide stations at Point Reyes and Monterey, California, (section 3.1) to acquire data sets to support the shelf wave study portion of the circulation survey.

A Marsh-McBirney (MMI) 585 electromagnetic burst sampling current meter was used to study the current-to-wave signal-to-noise (S/N) ratio at several locations in the estuary (section 2.0.). The S/N ratio is an index of the dynamic effect of waves on data measured by a current meter. The S/N results are used to provide insight on how the NOS Aanderaa current data correlates with the USGS ENDECO current meter data.

The data from this survey were acquired by the NOAA Ship McARTHUR, under the command of NOAA Commander Freddie L. Jeffries. This 175-foot Class III ship, whose home port is the Pacific Marine Center (PMC) in Seattle, Washington, carries a complement of 6 officers and 30 crew and has been specifically equipped for circulation survey operations. The ship is capable of deploying and retrieving current meter mooring systems, taking CTD and meteorological measurements, making in situ data quality checks, carrying out preliminary processing of all data, carrying out onboard electronic maintenance, and performing special oceanographc studies as required. Ship personnel also install tide gages assisted by NOS's Pacific Tide Party, which is based at PMC. The NOAA Ship McARTHUR's specifications and special characteristics are depicted in table 2. Instrumentation used in the actual data collection will be described in succeeding chapters.

The U.S. Geological Survey data collection was conducted from the R/V POLARIS, the Geological Survey's 97-foot research vessel berthed at Redwood City, California. The R/V POLARIS was constructed in 1927 and converted for oceanogrpahic sampling in 1965 by the University of California. The USGS

Table 2. NOAA Ship McARTHUR

Commissioned: December 1966
Builder: Norfolk Shipbuilding and Drydock, Norfolk, VA
Homeport: Seattle, WA

Officers and Crew: 38
Displacement: 995 tons
Length: 175.0 ft.
Breadth: 38.0 ft.
Draft: 12.1 ft.
Cruising Speed: 12 kn
Range: 6,000 nmi
Endurance: 17 days

Berthing: 40 bunks

Oceanographic Laboratory: 150 ft^2

Winches: One Northern Line CTD winch
One Branden oceanographic winch
One A-frame winch

Cranes and Booms: One telescoping boom
Location: Foredeck

One articulated boom
Location: Starboard quarter

A-Frames: One movable type
Location: Stern

Scientific Equipment:

1 Grundy C/STD system
1 AML portable CTD
1 Soltec C/STD analog recorder
15 tide gages (Fischer Porter ADRs, and Metercraft and Bristol bubblers)

2 Plessey lab salinometers
56 Aanderaa current meters
4 Aanderaa water level gages
2 Aanderaa meteorological stations
DQA test equipment

Circulation Measurements Data Processing (CMDP) System: The CMDP is equipped with a PDP 11/34 computer with a 128K memory and a CAMAC interface system which are used for processing circulation data.

LAUNCHES

One 26 ft. diesel Monark aluminum workboat
One 17 ft. gasoline outboard Monark aluminum open boat
One 12 ft. gasoline outboard Alumacraft aluminum skiff
One 16 ft. gasoline outboard Boston Whaler fiberglass open boat

acquired the vessel in 1966, and with several modifications, it has evolved to its present configuration, which is well suited as a platform to study estuarine processes. The vessel is staffed by a captain and crew of from one to three, and during water sampling cruises, carries as many as 15 to 20 biological, chemical, and physical research scientists. During the San Francisco Bay Area Circulation Survey, the R/V POLARIS was under the command of Frank Lewis and Byron Richards. The vessel is equipped for deployment and recovery of oceanographic equipment of moderate weight and size, and contains several laboratories used during water sampling cruises for onboard analyses. In addition to current meter work, the ship is regularly used for collecting salinity, temperature, dissolved oxygen, light transmission, chlorophyll a fluorescence, light extinction, turbidity, pH, pCO_2, orthophosphate, nitrate + nitrite, nitrite, ammonia, silicate, size distribution of phytoplankton, and phytoplankton and zooplankton species composition and abundance data.

1.5. Purpose of This Report

The purpose of this report is to make the general public, scientific institutions, and governmental agencies (Federal, State, and local) aware of the existence of these valuable data. This report provides the details which are beneficial to a potential user, such as instrumentation used, location of stations, time periods of occupation, quality of data, sampling rate, and standard processing techniques. This report also includes a chapter summarizing the current and tide data taken by NOS in this area prior to this survey.

For information regarding available data products, costs, specific available data, and any other pertinent information, address requests to the following three sources:

1. National Oceanographic Data Center

Director, National Oceanographic Data Center
NOAA/National Environmental Satellite, Data, and Information Service
NOAA Page Building 1
2001 Wisconsin Avenue, N.W.
Washington, D. C. 20235

2. National Ocean Service

Director, Office of Oceanography and Marine Assessment
NOAA/National Ocean Service
6001 Executive Boulevard
Rockville, Maryland 20852

3. United States Geological Survey

Dr. Ralph T. Cheng
Water Resources Division
U.S. Geological Survey
345 Middlefield Road MS/96
Menlo Park, California 94025

2.0. CURRENT DATA

2.1. Locations of Current Stations and Relevant Information

An initial survey plan was designed in cooperation with USGS, which incorporated all available in-house material including historical data, detailed charts, library sources, planning meetings, and an onsite reconnaissance of the survey area. In a circulation survey, the information from current meters comprises the primary data set. Each proposed station location in the original plan was inspected to verify the published charted depths. The survival of a station, especially in major shipping channels, was of the highest priority. The current meter survey was planned using a three-dimensional array of current meters. The observational depths were selected to assure that the vertical profile of the current structure could be determined. Because of navigational requirements, observations were obtained as near to the surface as allowable by mooring design and data noise considerations.

To fully describe the three-dimensional structure both spatially and temporally, the planned period for a given observation was determined by the standard analysis techniques that can be performed on the current records. Several spatially located current meter stations were occupied for long periods to serve as reference stations for the survey, and all other observations were planned for a period of at least 15 days, with most stations being occupied for over 30 days. This strategy allows for comparisons to be made between the shorter-period stations and the long-period reference stations. The data from the reference stations include all nontidal conditions (fresh water runoff and meteorological effects) that occur during the survey, and can be analyzed to give the most accurate harmonic constants obtainable.

The geographic location of each current station was determined by a simultaneous three-point sextant fix during both deployment and recovery. A station's precise longitudinal location is extremely critical owing to the relative phase distribution of the harmonic constituents resulting from the spatially distributed station positions, and because currents can vary significally with changes in bathymetry.

Tidal current station locations, designated by the letter "C" followed by a one-to-three-digit number are plotted on figure 3 for the San Francisco Bay Area Circulation Survey. Table 3 presents the following information for each station: circulation station number, geographic coordinates, dates and duration of observation, depth of water and meter relative to mean lower low water (MLLW), instrument type, samples per hour, individual control numbers, and days of good data for each measured parameter. Current stations and tide stations (section 3.0.) were installed close together, when possible and geographically feasible, to get a better correlation between tidal and current measurements. Meteorological station locations (section 6.0.) are also plotted on figure 3.

The MMI data series, used for the S/N ratio study described in section 1.4., were taken when the meter was in a burst sampling mode. The meter was set to take one sample per second for 60 seconds once an hour. Three data series were obtained, one series at each of the following locations: C22 (San Pablo Bay), C211 (San Francisco Bay proper), and C312 (South San Francisco Bay). The MMI locations correspond with existing NOS stations. The NOS stations had an ENDECO current meter at the top depth, which was the MMI meter depth, and Aanderaa current meters at the deeper observation levels.

2.2. Instrumentation

The current data acquisition systems used for this survey include Aanderaa, ENDECO, and Marsh McBirney current meters. Each of these three systems has special operating characteristics which make each system uniquely appropriate for the conditions that were encountered in this survey.

A graphic sketch of the Aanderaa Recording Current Meter Model RCM4 is shown on figure 4, and table 4 gives the specifications for the Aanderaa RCM4 meter. These self-contained instruments record data on magnetic tape and are designed to record the speed and direction of ocean currents below the wave zone. The Aanderaa RCM4 can be used in protected estuaries, but does have limitations when deployed on a mooring near the water surface where wind wave noise and resulting mooring motion can contaminate the current signal. Temperature, conductivity, and pressure sensors are options that have been

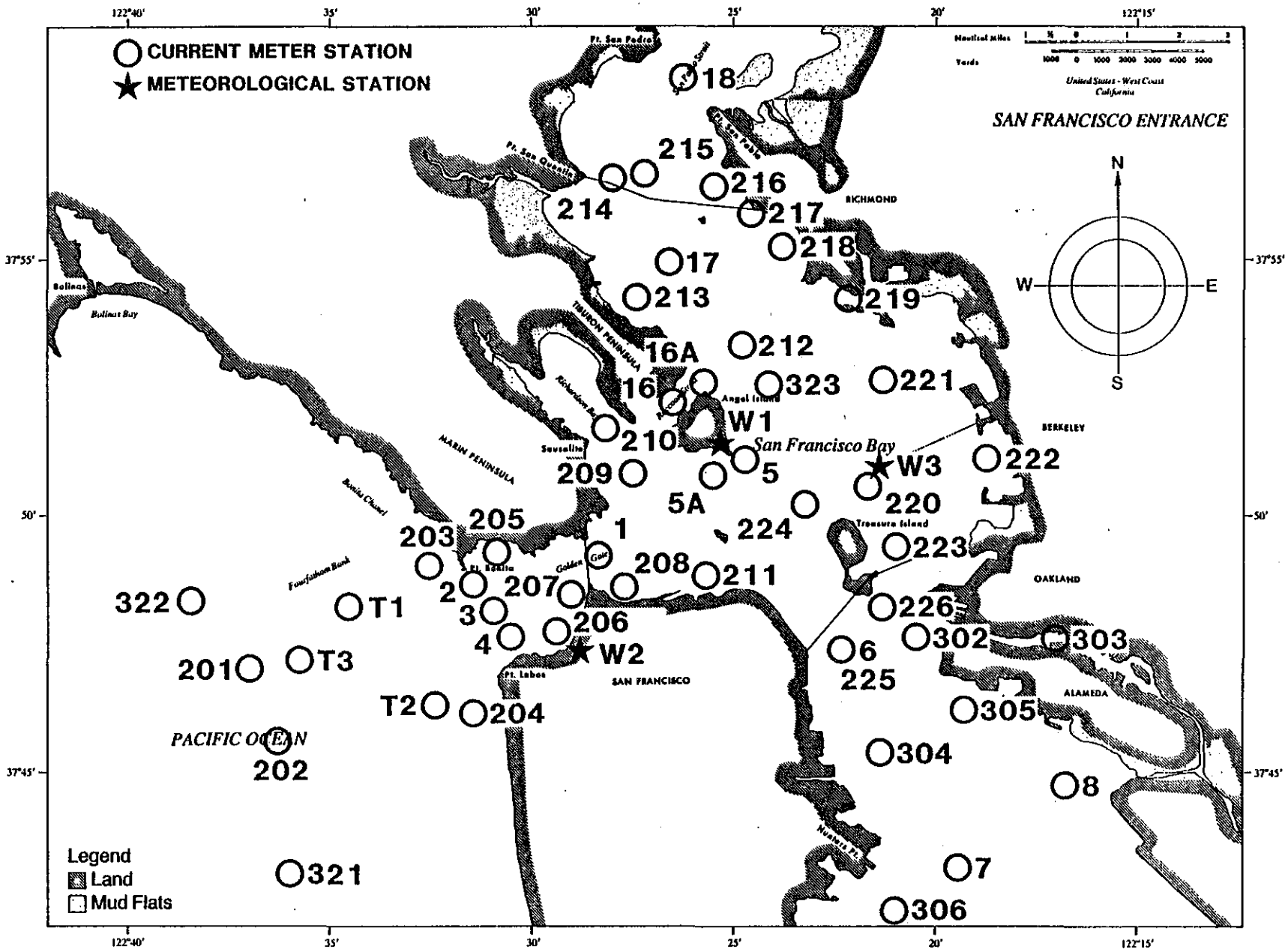

Figure 3a. Current Station Locations

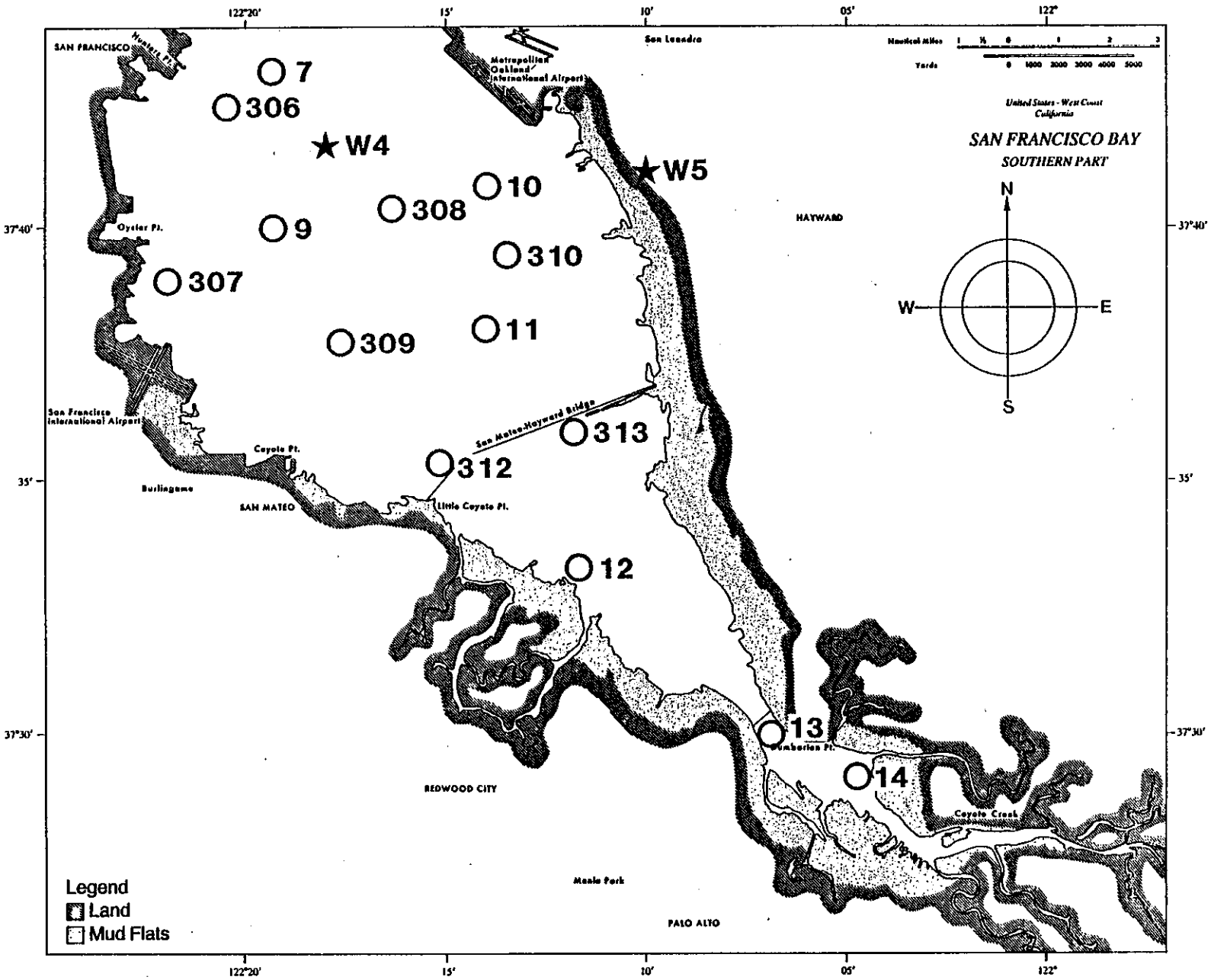

Figure 3b. Current Station Locations

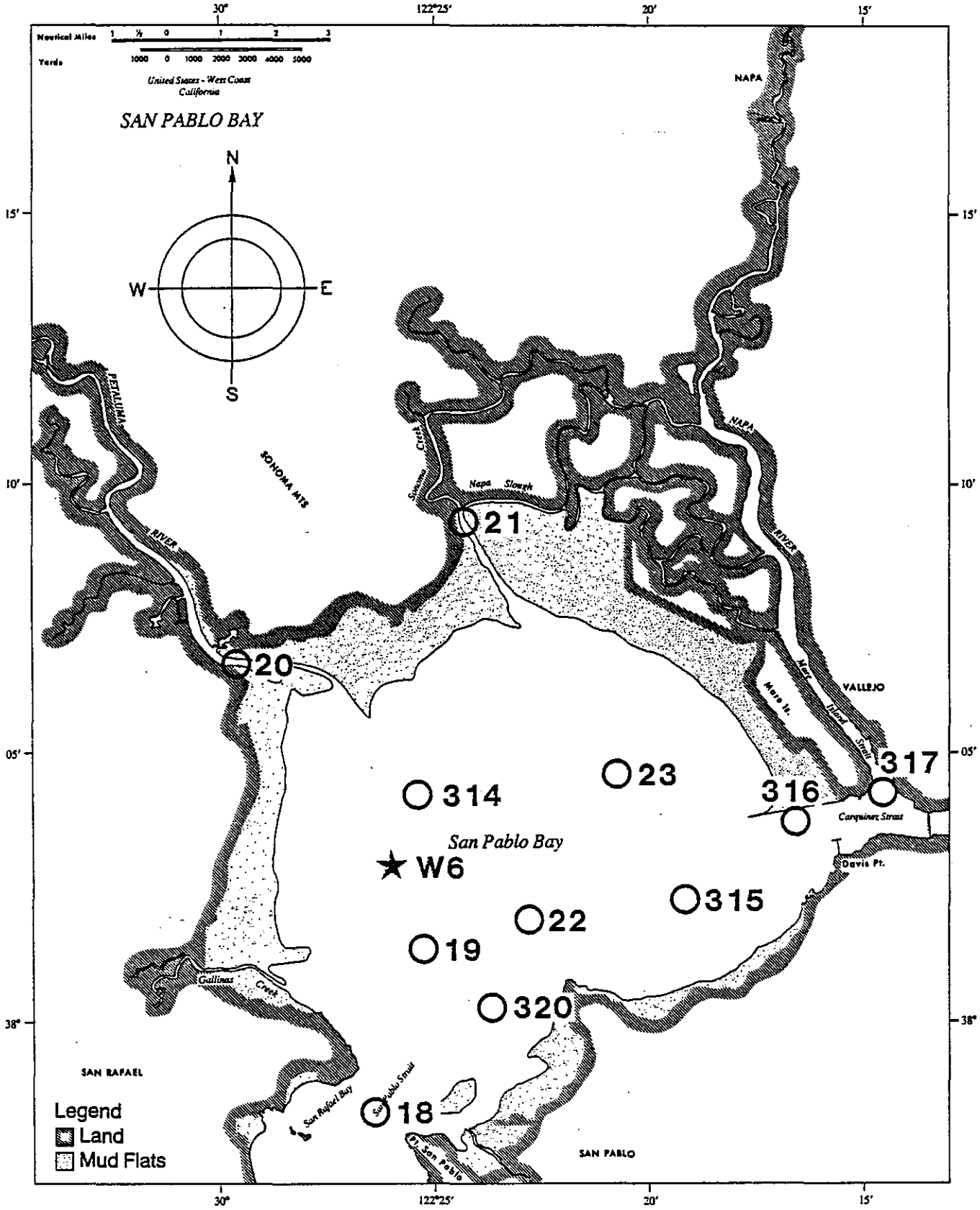

Figure 3c. Current Station Locations

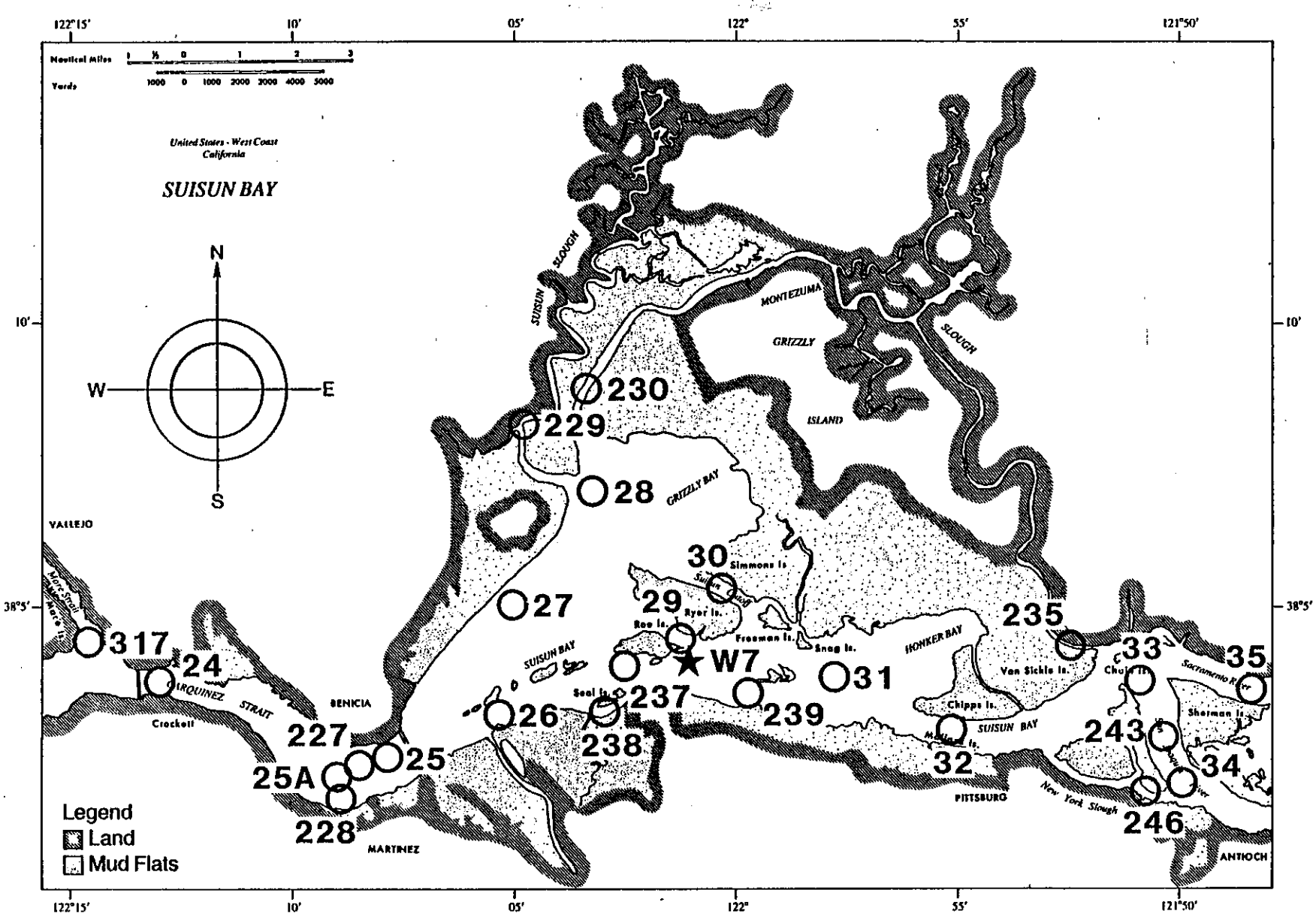

Figure 3d. Current Station Locations

Table 3. Current Stations Occupied During the San Francisco Bay Area Circulation Survey

Station Number	OBSERVATION INFORMATION									SENSORS IN OPERATION DAYS OF GOOD DATA				
	Latitude(N) Longitude(W)	Dates of Observation	Days of Data	Depth of Water MLLW (Meters)	Depth of Meter (+) Above Bottom (-) Below Surface MLLW	Instrument A=Aanderaa E=Endeco	Samples per Hour	Control Number	Speed	Direction	Pressure	Temperature	Conductivity
C1	37°49'15"	02/05/79-02/24/79	19.1	97.6	+91.5(- 6.1)	A	6	1672	19.1	19.1	6.6	6.6	6.6
	122°28'30"	02/05/79-02/16/79	11.1		+85.4(-12.2)	A	6	1673	8.2	11.1	11.1	11.1	11.1
		02/05/79-02/27/79	22.2		+45.8(-51.8)	A	6	1674	5.3	22.2	22.2	22.2	22.2
		02/05/79-02/27/79	22.2		+ 7.6(-90.3)	A	6	1675	8.2	22.2	22.2	22.2	22.2
		02/24/79-02/27/79	3.1		+91.5(- 6.1)	A	6	1700	3.1	3.1	3.1	3.1	3.1
		02/16/79-02/27/79	11.1		+85.4(-12.2)	A	6	1689	11.1	11.1	11.1	11.1	11.1
	37°49'15"	02/28/79-03/29/79	29.8	98.8	+91.5(- 7.3)	A	6	1711	29.8	29.8	29.8	29.8	29.8
	122°28'24"		29.8		+85.4(-13.4)	A	6	1712	29.8	29.8	29.8	29.8	29.8
			29.8		+45.8(-53.1)	A	6	1713	0	0	29.8	0	29.8
			29.8		+ 7.6(-91.2)	A	6	1714	0	0	29.8	0	29.8
	37°49'18"	03/29/79-04/25/79	26.9	97.9	+91.5(- 6.4)	A	6	1739	5.5	5.5	5.5	8.4	5.5
	122°28'27"		26.9		+85.4(-12.5)	A	6	1740	0	0	0	0	0
		03/29/79-04/27/79	28.9		+45.8(-52.2)	A	6	1741	28.9	28.9	16.7	28.9	16.7
			28.9		+ 7.6(-90.3)	A	6	1742	28.9	28.9	18.3	28.9	28.9
	37°49'14"	04/27/79-05/07/79	9.8	97.6	+91.5(- 6.1)	A	6	1763	9.8	9.8	9.8	9.8	9.8
	122°28'27"		9.8		+85.4(-12.5)	A	6	1764	9.8	9.8	0	9.8	0
			9.8		+45.8(-51.9)	A	6	1765	9.8	9.8	9.8	9.8	9.8
			9.8		+ 7.6(-90.0)	A	6	1766	9.8	9.8	9.8	9.8	9.8
	37°49'12"	09/10/79-10/12/79	31.9	97.2	+85.4(-11.9)	A	6	1823	31.9	31.9	31.9	31.9	31.9
	122°28'22"		31.9		+76.2(-21.0)	A	6	1824	31.9	31.9	31.9	31.9	31.9
			31.9		+ 7.6(-89.7)	A	6	1825	31.9	31.9	31.9	31.9	31.8
	37°49'14"	10/12/79-10/19/79	7.0	96.4	+85.4(-11.3)	A	6	1868	0	0	0	0	0
	122°28'28"		7.0		+76.2(-20.4)	A	6	1869	0	0	0	0	0
			7.0		+ 7.6(-89.1)	A	6	1870	0	0	0	0	0

Table 3. Continued

Station Number	OBSERVATION INFORMATION								SENSORS IN OPERATION DAYS OF GOOD DATA				
	Latitude(N) Longitude(W)	Dates of Observation	Days of Data	Depth of Water MLLW (Meters)	Depth of Meter (+) Above Bottom (-) Below Surface MLLW	Instrument A=Aanderaa E=Endeco	Samples per Hour	Control Number	Speed	Direction	Pressure	Temperature	Conductivity
	37°49'13"	10/19/79-11/08/79	19.9	95.4	+85.4(-10.1)	A	6	1892	19.9	19.9	4.9	19.9	0
	122°28'26"		19.9		+76.2(-19.2)	A	6	1893	19.9	19.9	19.9	19.9	0
			19.9		+ 7.6(-87.8)	A	6	1894	3.5	19.9	19.9	19.9	19.9
	37°49'13"	11/08/79-11/29/79	21.0	97.6	+85.4(-12.2)	A	6	1924	21.0	21.0	11.0	11.0	11.0
	122°28'22"		21.0		+76.2(-21.4)	A	6	1925	15.1	18.1	10.7	12.1	10.7
			21.0		+ 7.6(-90.0)	A	6	1926	21.0	21.0	21.0	21.0	21.0
	37°49'12"	11/30/79-12/07/79	7.0	96.1	+85.4(-10.7)	A	6	1941	7.0	7.0	7.0	7.0	7.0
	122°28'22"		7.0		+76.2(-19.8)	A	6	1942	7.0	7.0	7.0	7.0	7.0
			7.0		+ 7.6(-88.4)	A	6	1943	7.0	7.0	7.0	7.0	7.0
	37°49'14"	04/01/80-04/15/80	13.8	99.4	+87.2(-12.2)	E	30	01B1	13.8	0	0	13.8	13.8
	122°28'22"		13.8		+76.2(-23.2)	A	6	1955	13.8	13.8	13.8	13.8	13.8
			13.8		+45.8(-53.7)	A	6	1956	0	0	0	0	0
			13.8		+ 7.6(-91.8)	A	6	1957	13.8	13.8	10.4	13.8	10.4
	37°49'12"	04/15/80-05/06/80	20.9	95.3	+87.5(-12.2)	E	30	01C1	21.0	0	0	21.0	21.0
	122°28'19"		20.9		+76.2(-19.2)	A	6	1987	0	0	0	0	0
			20.9		+45.8(-49.7)	A	6	1988	20.9	20.9	20.9	20.9	20.9
			20.9		+ 7.6(-87.8)	A	6	1989	20.9	20.9	20.9	20.9	20.9
	37°49'12"	05/06/80-05/27/80	20.0	97.5	+85.3(-12.2)	E	30	01D1	20.0	0	0	20.0	20.0
	122°28'22"												
	37°49'11"	05/28/80-06/16/80	18.8	97.5	+85.3(-12.2)	E	30	01E1	18.8	0	0	18.8	18.8
	122°28'24"		18.8		+76.2(-21.4)	A	6	2051	18.8	18.8	18.8	18.8	18.8
			18.8		+45.8(-51.8)	A	6	2052	0	0	0	0	0
			18.8		+ 7.6(-90.0)	A	6	2053	18.8	18.8	18.8	18.8	18.8

Table 3. Continued

Station Number	OBSERVATION INFORMATION									SENSORS IN OPERATION DAYS OF GOOD DATA				
	Latitude(N) Longitude(W)	Dates of Observation	Days of Data	Depth of Water MLLW (Meters)	Depth of Meter (+) Above Bottom (-) Below Surface MLLW	Instrument A=Aanderaa E=Endeco	Samples per Hour	Control Number	Speed	Direction	Pressure	Temperature	Conductivity
	37°49'11"	06/16/80-07/09/80	22.9	97.1	+84.9(-12.2)	E	30	01F1	22.9	0	0	22.9	16.0
	122°28'21"		22.9		+75.6(-21.0)	A	6	2085	0	0	0	0	0
			22.9		+45.8(-51.4)	A	6	2086	0	0	0	0	0
			22.9		+ 7.6(-89.4)	A	6	2087	22.9	22.9	22.9	22.9	22.9
	37°49'12"	07/09/80-07/30/80	21.0	97.9	+85.7(-12.2)	E	30	01G1	16.5	21.0	0	0	21.0
	122°28'24"												
	37°49'12"	07/09/80-07/14/80	4.9	97.9	+76.2(-21.6)	A	6	2121	4.9	4.9	4.9	0	4.9
	122°28'24"		4.9		+45.8(-52.2)	A	6	2122	4.9	4.9	4.9	4.9	4.9
			4.9		+ 7.6(-90.3)	A	6	2123	0	0	0	0	0
	37°49'13"	07/14/80-07/30/80	15.1	97.4	+76.2(-21.0)	A	6	2135	15.1	15.1	15.1	15.1	15.1
	122°28'27"		15.1		+45.8(-51.5)	A	6	2136	15.1	15.1	15.1	15.1	15.1
			15.1		+ 7.6(-89.7)	A	6	2137	13.8	15.1	15.1	15.1	15.1
	37°49'11"	07/30/80-08/12/80	13.1	98.3	+86.1(-12.2)	E	30	01H1	8.0	13.1	0	0	13.1
	122°28'25"		13.1		+76.2(-22.0)	A	6	2162	6.5	13.1	13.1	13.1	13.1
			13.1		+45.8(-52.5)	A	6	2163	0	0	0	0	0
			13.1		+ 7.6(-90.6)	A	6	2164	13.1	13.1	13.1	13.1	13.1
	37°49'11"	08/13/80-08/28/80	15.0	97.0	+84.8(-12.2)	E	30	01I1	15.0	15.0	0	15.0	15.0
	122°28'23"		15.0		+75.9(-21.0)	A	6	2187	15.0	15.0	15.0	15.0	15.0
			15.0		+45.8(-51.2)	A	6	2188	15.0	15.0	15.0	15.0	15.0
			15.0		+ 7.6(-89.4)	A	6	2189	0	15.0	15.0	15.0	0
	37°49'12"	08/28/80-09/17/80	19.3	97.2	+85.0(-12.2)	E	30	01J1	19.3	0	0	19.3	0
	122°28'22"		19.3		+76.2(-21.0)	A	6	2216	19.3	19.3	19.3	19.3	0
			19.3		+45.8(-51.5)	A	6	2217	0	0	0	0	0
			19.3		+ 7.6(-89.7)	A	6	2218	0	0	0	0	0

Table 3. Continued

Station Number	OBSERVATION INFORMATION									SENSORS IN OPERATION DAYS OF GOOD DATA				
	Latitude(N) Longitude(W)	Dates of Observation	Days of Data	Depth of Water MLLW (Meters)	Depth of Meter (+) Above Bottom (-) Below Surface MLLW	Instrument A=Aanderaa E=Endeco	Samples per Hour	Control Number	Speed	Direction	Pressure	Temperature	Conductivity
	37°49'12"	09/17/80-09/29/50	12.6	97.0	+84.8(-12.2)	E	30	01K1	8.0	0	0	13.1	0
	122°28'23"		12.6		+76.2(-20.7)	A	6	2247	7.8	12.6	12.6	12.6	12.6
			12.6		+45.8(-51.2)	A	6	2248	12.6	12.6	0	0	0
			12.6		+ 7.6(-89.4)	A	6	2249	12.6	12.6	12.6	12.6	12.6
	37°49'12"	09/29/80-10/15/80	16.1	97.5	+85.3(-12.2)	E	30	01L1	16.1	16.1	0	0	16.1
	122°28'20"		16.1		+76.2(-21.4)	A	6	2270	0	0	0	0	0
			16.1		+45.8(-51.8)	A	6	2271	16.1	16.1	16.1	16.1	16.1
			16.1		+ 7.6(-90.0)	A	6	2272	15.7	16.1	16.1	16.1	16.1
	37°49'13"	10/15/80-10/29/80	14.0	97.5	+85.3(-12.2)	E	30	01M1	14.0	0	0	14.0	14.0
	122°28'20"		14.0		+76.2(-21.4)	A	6	2294	0	0	0	0	0
			14.0		+45.8(-51.8)	A	6	2295	0	0	0	0	0
			14.0		+ 7.6(-90.0)	A	6	2296	5.8	14.0	14.0	14.0	0
	37°49'14"	10/29/80-11/19/80	20.9	97.7	+85.5(-12.2)	E	30	01N1	20.9	20.9	0	20.9	20.9
	122°28'20"		20.9		+76.2(-21.4)	A	6	2320	20.9	20.9	0	20.9	0
			20.9		+45.8(-51.8)	A	6	2321	20.9	20.9	20.9	20.9	20.9
			20.9		+ 7.6(-90.0)	A	6	2322	20.9	20.9	20.9	0	0
CT1	37°48'15"	04/30/80-06/09/80	40.0	14.6	+ 1.5(-13.1)	A	6	2015	0	0	0	0	0
	122°34'22"												
C2	37°48'44"	02/05/79-02/23/79	17.3	18.8	+12.2(- 6.7)	A	6	1676	7.2	17.3	17.3	17.3	17.3
	122°31'44"		17.3		+ 6.1(-12.8)	A	6	1677	17.3	17.3	17.3	17.3	17.3
	37°48'40"	09/12/79-10/16/79	34.0	35.7	+23.5(-12.2)	A	6	1835	31.3	31.3	31.3	31.3	31.3
	122°31'19"		34.0		+ 7.6(-28.1)	A	6	1836	34.0	34.0	34.0	34.0	34.0
			34.0		+ 1.8(-33.6)	A	6	1837	34.0	34.0	34.0	34.0	0

Table 3. Continued

Station Number	OBSERVATION INFORMATION									SENSORS IN OPERATION DAYS OF GOOD DATA				
	Latitude(N) Longitude(W)	Dates of Observation	Days of Data	Depth of Water MLLW (Meters)	Depth of Meter (+) Above Bottom (-) Below Surface MLLW	Instrument A=Aanderaa E=Endeco	Samples per Hour	Control Number	Speed	Direction	Pressure	Temperature	Conductivity
	37°48'43"	10/16/79-10/31/79	14.8	36.6	+23.5(-13.1)	A	6	1882	14.8	14.8	14.8	14.8	14.8
	122°31'16"		14.8		+ 7.6(-29.0)	A	6	1883	14.8	14.8	14.8	14.8	14.8
			14.8		+ 1.8(-34.8)	A	6	1884	14.8	14.8	14.8	14.8	14.8
CT2	37°46'18"	04/14/80-05/09/80	25.0	15.4	+ 1.5(-13.7)	A	6	1983	25.0	25.0	25.0	25.0	25.0
	122°32'08"												
	37°46'18"	05/09/80-06/03/80	25.0	15.2	+ 1.5(-13.7)	A	6	2019	0	0	0	0	0
	122°32'08"												
	37°46'14"	11/03/80-11/22/80	18.9	15.2	+ 1.5(-13.7)	A	6	2331	0	0	18.9	0	18.9
	122°32'11"												
C3	37°48'18"	02/05/79-02/23/79	18.0	32.9	+26.8(- 6.1)	A	6	1678	7.6	7.6	7.6	0	0
	122°30'56"		18.0		+20.7(-12.2)	A	6	1679	0	0	0	0	0
			18.0		+ 7.6(-25.3)	A	6	1680	0	0	0	0	0
	37°48'05"	02/27/79-03/29/79	30.2	36.8	+31.1(- 5.8)	A	6	1702	30.2	30.2	30.2	30.2	30.2
	122°31'00"		30.2		+25.0(-11.9)	A	6	1703	0	30.2	0	30.2	0
			30.2		+ 7.6(-29.3)	A	6	1704	30.2	30.2	30.2	30.2	30.2
	37°48'05"	09/12/79-10/16/79	34.3	37.1	+31.1(- 6.1)	A	6	1838	0	0	0	0	0
	122°31'04"		34.3		+25.0(-12.2)	A	6	1839	34.3	34.3	34.3	34.3	0
			34.3		+11.9(-25.3)	A	6	1840	34.3	34.3	0	34.3	0
	37°48'04"	10/16/79-10/31/79	14.8	37.7	+31.1(- 6.7)	A	6	1878	14.8	14.8	14.8	14.8	14.8
	122°31'08"		14.8		+25.0(-12.8)	A	6	1879	14.8	14.8	14.8	14.8	14.8
			14.8		+11.9(-25.9)	A	6	1880	14.8	14.8	14.8	14.8	0
	37°48'05"	04/03/80-04/16/80	12.9	36.4	+31.1(- 5.2)	A	6	1966	12.9	12.9	0	12.9	12.9
	122°31'06"		12.9		+25.0(-11.3)	A	6	1967	12.9	12.9	12.9	12.9	12.9
			12.9		+ 7.6(-28.7)	A	6	1968	12.9	12.9	12.9	12.9	12.9

Table 3. Continued

Station Number	OBSERVATION INFORMATION								SENSORS IN OPERATION DAYS OF GOOD DATA				
	Latitude(N) Longitude(W)	Dates of Observation	Days of Data	Depth of Water MLLW (Meters)	Depth of Meter (+) Above Bottom (-) Below Surface MLLW	Instrument A=Aanderaa E=Endeco	Samples per Hour	Control Number	Speed	Direction	Pressure	Temperature	Conductivity
	37°48'05"	04/16/80-05/13/80	27.0	37.0	+31.1(- 5.8)	A	6	1993	27.0	27.0	27.0	27.0	27.0
	122°31'04"		27.0		+25.0(-11.9)	A	6	1994	27.0	27.0	27.0	27.0	27.0
			27.0		+ 7.6(-29.3)	A	6	1995	13.4	13.4	13.4	13.4	13.4
	37°48'05"	05/13/80-05/19/80	6.0	37.5	+31.1(- 6.4)	A	6	2025	0	0	0	0	0
	122°31'04"		6.0		+25.0(-12.5)	A	6	2026	0	0	0	0	0
			6.0		+ 7.6(-29.9)	A	6	2027	0	0	0	0	0
CT3	37°47'15"	04/14/80-05/08/80	23.8	15.4	+ 1.5(-13.7)	A	6	1985	11.8	11.8	11.8	11.8	0
	122°35'19"												
	37°47'10"	05/09/80-06/11/80	32.9	15.2	+ 1.5(-13.7)	A	6	2011	0	0	0	0	0
	122°35'36"												
C4	37°47'51"	02/05/79-03/08/79	30.1	48.1	+42.1(- 6.1)	A	6	1681	19.0	30.1	30.1	30.1	0
	122°30'40"		30.1		+36.0(-12.2)	A	6	1682	21.1	30.1	30.1	30.1	30.1
			30.1		+ 7.6(-40.6)	A	6	1683	30.1	30.1	22.6	30.1	0
	37°47'45"	09/12/79-10/16/79	34.1	48.1	+42.1(- 6.1)	A	6	1841	10.0	10.0	8.5	10.0	10.0
	122°30'43"		34.1		+36.0(-12.2)	A	6	1842	34.1	34.1	34.1	34.1	34.1
			34.1		+ 7.6(-40.6)	A	6	1843	21.4	34.1	0	34.1	0
	37°47'43"	10/17/79-10/25/79	8.2	46.7	+42.1(- 4.6)	A	6	1885	8.2	8.2	8.2	8.2	8.2
	122°30'41"		8.2		+36.0(-10.7)	A	6	1886	8.2	8.2	8.2	8.2	8.2
			8.2		+ 7.5(-39.0)	A	6	1887	8.2	8.2	0	0	0
			8.2		+ 1.8(-44.8)	A	6	1888	8.2	8.2	0	8.2	8.2

Table 3. Continued

Station Number	OBSERVATION INFORMATION									SENSORS IN OPERATION DAYS OF GOOD DATA				
	Latitude(N) Longitude(W)	Dates of Observation	Days of Data	Depth of Water MLLW (Meters)	Depth of Meter (+) Above Bottom (-) Below Surface MLLW	Instrument A=Aanderaa E=Endeco	Samples per Hour	Control Number	Speed	Direction	Pressure	Temperature	Conductivity
C5	37°51'02" 122°24'48	02/05/79-02/21/79	15.9	37.5	+31.1(- 6.4)	A	6	1684	5.1	5.1	15.9	15.9	15.9
			15.9		+25.0(-12.5)	A	6	1685	15.9	15.9	15.9	15.9	15.9
			15.9		+ 7.6(-29.9)	A	6	1686	15.9	15.9	15.9	15.9	15.9
			15.9		+ 1.5(-36.0)	A	6	1687	15.9	15.9	15.9	15.9	15.9
	37°51'10" 122°24'47"	02/21/79-02/27/79	6.0	37.2	+31.1(- 6.1)	A	6	1695	2.3	2.3	6.0	6.0	0
			6.0		+25.0(-12.2)	A	6	1696	6.0	6.0	6.0	6.0	0
			6.0		+ 7.6(-29.6)	A	6	1697	6.0	6.0	6.0	6.0	6.0
			6.0		+ 1.5(-35.7)	A	6	1698	6.0	6.0	6.0	6.0	5.0
	37°51'09" 122°24'46"	02/27/79-03/29/79	29.8	37.0	+31.1(- 5.8)	A	6	1707	0	0	0	0	0
			29.8		+25.0(-11.9)	A	6	1708	29.8	29.8	29.8	29.8	29.8
			29.8		+ 7.6(-29.3)	A	6	1709	0	0	0	0	0
			29.8		+ 1.5(-35.4)	A	6	1710	0	0	29.8	29.8	29.8
	37°51'10" 122°24'44"	03/29/79-04/13/79	15.0	37.5	+31.1(- 6.4)	A	6	1735	15.0	15.0	0	15.0	0
			15.0		+25.0(-12.5)	A	6	1736	15.0	15.0	15.0	15.0	15.0
			15.0		+ 7.6(-29.9)	A	6	1737	15.0	15.0	15.0	15.0	15.0
			15.0		+ 1.5(-36.0)	A	6	1738	3.0	3.0	15.0	15.0	0
C5A	37°50'45" 122°25'26"	09/11/79-10/10/79	28.9	30.8	+24.7(- 6.1)	E	30	5AA1	28.9	28.9	0	28.9	28.9
			28.9		+17.7(-13.1)	A	6	1826	0	0	0	0	0
			28.9		+ 1.5(-29.3)	A	6	1827	4.9	28.9	28.8	28.9	28.9
	37°50'44" 122°25'24"	10/10/79-10/25/79	14.8	30.0	+23.9(- 6.1)	E	30	5AB1	0	0	0	0	0
			14.8		+17.7(-12.2)	A	6	1871	14.8	14.8	14.8	14.8	14.8
			14.8		+ 1.5(-28.4)	A	6	1872	0	14.8	14.8	14.8	14.8

Table 3. Continued

Station Number	OBSERVATION INFORMATION									SENSORS IN OPERATION DAYS OF GOOD DATA				
	Latitude(N) Longitude(W)	Dates of Observation	Days of Data	Depth of Water MLLW (Meters)	Depth of Meter (+) Above Bottom (-) Below Surface MLLW	Instrument A=Aanderaa E=Endeco	Samples per Hour	Control Number	Speed	Direction	Pressure	Temperature	Conductivity
	37°50'46" 122°25'26"	05/13/80-05/22/80	9.2	30.8	+24.7(- 6.1)	E	30	5AC1	9.2	9.2	0	9.2	9.2
	37°50'44" 122°25'24"	05/13/80-05/30/80	17.0	30.0	+25.9(- 6.4)	A	6	2022	0	0	0	0	0
			17.0		+17.7(-12.2)	A	6	2023	0	0	0	0	0
			17.0		+ 1.5(-28.4)	A	6	2024	0	0	0	0	0
	37°50'44" 122°25'23"	05/30/80-06/16/80	17.0	32.4	+25.9(- 6.4)	A	6	2063	17.0	17.0	17.0	17.0	0
			17.0		+19.8(-12.5)	A	6	2060	0	0	0	0	0
			17.0		+ 7.6(-24.7)	A	6	2061	17.0	17.0	17.0	17.0	17.0
			17.0		+ 1.5(-30.8)	A	6	2062	17.0	17.0	17.0	17.0	17.0
C6	37°47'28" 122°22'23"	03/12/79-03/30/79	17.3	19.2	+13.1(- 6.1)	A	6	1722	0	0	0	0	0
			17.3		+ 7.0(-12.2)	A	6	1723	0	0	0	0	0
			17.3		+ 1.8(-17.4)	A	6	1724	17.3	17.3	17.3	17.3	17.3
	37°47'28" 122°22'23"	05/19/80-06/04/80	16.0	19.2	+13.7(- 6.4)	A	6	2034	0	0	0	0	0
			16.0		+ 7.6(-12.5)	A	6	2035	0	0	0	0	0
			16.0		+ 2.1(-18.0)	A	6	2036	0	0	0	0	0
	37°47'17" 122°22'24"	06/04/80-06/23/80	18.9	19.8	+13.7(- 6.1)	A	6	2065	18.9	18.9	18.9	18.9	18.9
			18.9		+ 7.6(-12.2)	A	6	2066	0	0	0	0	0
			18.9		+ 2.1(-17.7)	A	6	2067	0	0	0	0	0
	37°47'25" 122°22'24"	06/23/80-07/09/80	16.1	19.8	+13.7(- 6.1)	A	6	2096	16.1	16.1	16.1	16.1	16.1
			16.1		+ 7.6(-12.2)	A	6	2097	16.1	16.1	0	16.1	16.1
			16.1		+ 2.1(-17.7)	A	6	2098	16.1	16.1	16.1	16.1	0
	37°47'30" 122°22'23"	07/10/80-07/24/80	13.8	19.9	+13.7(- 6.1)	A	6	2130	6.2	6.2	6.2	5.2	0
			13.8		+ 7.6(-12.2)	A	6	2131	6.2	13.8	13.8	13.8	13.8
			13.8		+ 2.1(-17.7)	A	6	2132	0	13.8	0	13.8	13.8

Table 3. Continued

Station Number	OBSERVATION INFORMATION									SENSORS IN OPERATION DAYS OF GOOD DATA				
	Latitude(N) Longitude(W)	Dates of Observation	Days of Data	Depth of Water MLLW (Meters)	Depth of Meter (+) Above Bottom (-) Below Surface MLLW	Instrument A=Aanderaa E=Endeco	Samples per Hour	Control Number	Speed	Direction	Pressure	Temperature	Conductivity
	37°47'24"	07/24/80-08/12/80	19.1	19.0	+13.7(- 5.2)	A	6	2151	19.1	19.1	19.1	19.1	19.1
	122°22'23"		19.1		+ 7.6(-11.3)	A	6	2152	19.1	19.1	19.1	19.1	0
			19.1		+ 2.1(-16.8)	A	6	2153	3.2	19.1	19.1	19.1	19.1
	37°47'27"	08/12/80-08/28/80	15.9	19.8	+13.7(- 6.1)	A	6	2184	15.9	15.9	0	15.9	15.9
	122°22'26"		15.9		+ 7.6(-12.2)	A	6	2185	15.9	15.9	0	15.9	15.9
			15.9		+ 2.1(-17.7)	A	6	2186	0	0	0	0	0
C7	37°43'18"	03/09/79-03/26/79	17.8	12.3	+ 6.1(- 6.1)	A	6	1720	17.8	17.8	17.8	17.8	0
	122°19'29"		17.8		+ 1.5(-10.7)	A	6	1721	0	0	17.8	0	17.8
	37°43'23"	07/10/80-07/29/80	18.8	12.4	+ 9.3(- 3.1)	E	30	07A1	18.8	0	0	18.8	6.0
	122°19'26"		18.8		+ 6.1(- 6.4)	A	6	2128	18.8	18.8	18.8	18.8	18.8
			18.8		+ 1.5(-11.0)	A	6	2129	18.8	18.8	18.8	18.8	0
	37°43'22"	07/29/80-08/19/80	21.0	12.6	+ 9.5(- 3.1)	E	30	07B1	21.1	0	0	21.1	6.0
	122°19'26"		21.0		+ 6.1(- 6.4)	A	6	2157	21.0	21.0	21.0	21.0	21.0
			21.0		+ 1.5(-11.0)	A	6	2158	0	16.2	16.2	16.2	0
C8	37°44'44"	07/11/80-07/25/80	14.0	2.2	+ 0.9(- 1.2)	A	6	2127	12.1	12.1	12.1	12.1	0
	122°16'59"												
	37°44'44"	07/25/80-08/13/80	19.0	2.2	+ 0.9(- 1.2)	A	6	2154	19.0	19.0	19.0	14.0	0
	122°16'59"												
C9	37°39'59"	02/06/79-03/08/79	30.1	7.6	+ 0.9(- 6.7)	A	6	1688	0	0	25.2	0	18.2
	122°19'14"												
	37°39'56"	03/08/79-04/16/79	40.8	7.7	+ 1.5(- 6.1)	A	6	1719	20.0	20.0	20.0	20.0	20.0
	122°19'18"												

Table 3. Continued

Station Number	OBSERVATION INFORMATION								SENSORS IN OPERATION DAYS OF GOOD DATA				
	Latitude(N) Longitude(W)	Dates of Observation	Days of Data	Depth of Water MLLW (Meters)	Depth of Meter (+) Above Bottom (-) Below Surface MLLW	Instrument A=Aanderaa E=Endeco	Samples per Hour	Control Number	Speed	Direction	Pressure	Temperature	Conductivity
	37°40'20"	12/18/79-01/11/80	24.1	7.6	+ 3.1(- 4.5)	E	30	09A1	6.0	24.1	0	0	24.1
	122°19'02"		24.1		+ 1.5(- 6.1)	A	6	1946	24.1	24.1	24.1	24.1	24.1
	37°40'35"	01/11/80-02/13/80	32.8	8.7	+ 3.3(- 5.4)	E	30	09B1	32.8	32.8	0	32.8	32.8
	122°19'03"		32.8		+ 1.5(- 7.1)	A	6	1948	22.8	24.8	20.4	24.8	0
	37°40'40"	02/13/80-03/13/80	28.9	8.5	+ 3.1(- 5.4)	E	30	09C1	28.9	28.9	0	28.9	28.9
	122°18'58"												
	37°40'42"	03/13/80-04/10/80	28.0	8.2	+ 3.1(- 5.1)	E	30	09D1	28.0	28.0	0	28.0	28.0
	122°19'05"		28.0		+ 1.5(- 6.7)	A	6	2009	28.0	28.0	0	28.0	0
	37°40'41"	04/10/80-05/19/80	38.8	7.0	+ 3.1(- 3.9)	E	30	09E1	38.8	38.8	0	38.8	27.0
	122°19'03"		38.8		+ 1.5(- 5.5)	A	6	2048	38.8	38.8	38.8	38.8	38.8
	37°40'40"	05/19/80-06/20/80	31.9	8.2	+ 3.4(- 4.8)	E	30	09F1	0	0	0	0	0
	122°19'00"		31.9		+ 1.5(- 6.7)	A	6	2095	0	0	0	31.9	31.9
	37°40'43"	06/20/80-07/22/80	32.0	7.9	+ 3.1(- 4.8)	E	30	0961	32.0	32.0	0	32.0	32.0
	122°19'01"		32.0		+ 1.5(- 6.4)	A	6	2133	20.1	32.0	32.0	32.0	32.0
	37°40'45"	07/22/80-08/22/80	31.0	7.3	+ 3.1(- 4.2)	E	30	09H1	30.0	30.0	0	30.0	30.0
	122°19'00"		31.0		+ 1.5(- 5.8)	A	6	2148	6.9	31.0	31.0	31.0	31.0
	37°40'47"	08/22/80-09/08/80	17.0	7.6	+ 3.1(- 4.5)	E	30	09I1	17.0	27.0	0	17.0	17.0
	122°19'00"		17.0		+ 1.5(- 6.1)	A	6	2195	6.9	6.9	0	0	0
	37°40'46"	09/08/80-10/04/80	25.3	7.9	+ 3.1(- 4.8)	E	30	09J1	22.0	22.0	0	25.3	8.0
	122°19'01"		25.3		+ 1.5(- 6.4)	A	6	2260	6.8	25.3	25.3	25.3	0
	37°40'41"	10/06/80-11/03/80	28.3	7.6	+ 3.1(- 4.5)	E	30	09K1	16.0	28.3	0	28.3	28.3
	122°19'14"		28.3		+ 1.5(- 6.1)	A	6	2280	0	0	0	0	0
	37°40'40"	11/07/80-11/28/80	21.0	7.9	+ 1.5(- 6.1)	A	6	2312	0	21.0	21.0	21.0	21.0
	122°19'10"		21.0		+ 3.4(- 4.5)	E	30	09L1	21.0	21.0	0	21.0	21.0

Table 3. Continued

Station Number	OBSERVATION INFORMATION									SENSORS IN OPERATION DAYS OF GOOD DATA				
	Latitude(N) Longitude(W)	Dates of Observation	Days of Data	Depth of Water MLLW (Meters)	Depth of Meter (+) Above Bottom (-) Below Surface MLLW	Instrument A=Aanderaa E=Endeco	Samples per Hour	Control Number	Speed	Direction	Pressure	Temperature	Conductivity
C10	37°41'24" 122°14'08"	02/33/79-03/10/79	15.0	2.5	+ 0.9(- 1.5)	A	6	1690	15.0	15.0	15.0	15.0	0
	37°40'56" 122°13'51"	07/31/80-08/18/80	18.0	2.1	+ 0.9(- 1.2)	A	6	2170	0	18.0	0	0	0
	37°40'56" 122°13'51"	08/18/80-09/03/80	16.0	2.1	+ 1.5(- 0.6)	A	6	2196	16.0	16.0	16.0	16.0	0
C11	37°37'26" 122°13'53"	02/23/79-03/10/80	15.1	2.2	+ 0.9(- 1.2)	A	6	1699	15.1	15.1	15.1	15.1	15.1
C12	37°33'16" 122°11'51"	02/06/79-02/28/79	18.0	11.2	+ 0.9(-10.1)	A	6	1693	18.0	18.0	0	18.0	18.0
	37°33'29" 122°11'56"	05/20/80-06/05/80	16.2	14.4	+ 8.5(- 5.8)	A	6	2037	16.2	16.2	16.2	16.2	16.2
			16.2		+ 1.5(-12.8)	A	6	2038	16.2	16.2	16.2	16.2	0
C13	37°30'05" 122°06'56"	02/06/79-03/09/79	30.0	14.3	+ 6.7(- 7.6)	A	6	1691	30.0	30.0	30.0	30.0	30.0
			30.0		+ 1.5(-12.8)	A	6	1692	30.0	30.0	30.0	30.0	30.0
	37°30'15" 122°06'50"	12/18/79-01/14/80	27.0	12.5	+ 6.1(- 6.4)	E	30	13A1	12.5	12.5	0	0	0
			27.0		+ 1.5(-11.0)	A	6	1947	27.0	27.0	0	27.0	27.0
	37°30'07" 122°06'44"	01/18/80-02/13/80	26.0	14.3	+ 6.1(- 8.2)	E	30	13B1	26.0	26.0	0	26.0	26.0
			26.0		+ 1.5(-12.8)	A	6	1949	20.0	20.0	20.0	20.0	20.0
	37°30'06" 122°06'45"	02/13/80-03/13/80	29.0	13.1	+ 6.1(- 7.0)	E	30	13C1	0	0	0	0	0
	37°30'07" 122°06'46"	03/13/80-04/11/80	29.0	15.2	+ 6.1(- 9.1)	E	30	13D1	29.0	29.0	0	29.0	29.0
			29.0		+ 1.5(-13.7)	A	6	2010	29.0	29.0	29.0	29.0	29.0
	37°30'08" 122°06'51"	04/11/80-05/06/80	25.2	14.0	+ 6.1(- 7.9)	E	30	13E1	25.2	25.2	0	25.2	19.0
			25.2		+ 1.5(-12.5)	A	6	2021	0	0	0	0	0

Table 3. Continued

Station Number	OBSERVATION INFORMATION									SENSORS IN OPERATION DAYS OF GOOD DATA				
	Latitude(N) Longitude(W)	Dates of Observation	Days of Data	Depth of Water MLLW (Meters)	Depth of Meter (+) Above Bottom (-) Below Surface MLLW	Instrument A=Aanderaa E=Endeco	Samples per Hour	Control Number	Speed	Direction	Pressure	Temperature	Conductivity
	37°30'08"	05/07/80-06/02/80	26.6	14.6	+ 6.1(- 8.5)	E	30	13F1	26.6	26.6	0	26.6	26.6
	122°06'51"		26.6		+ 1.5(-13.1)	A	6	2078	26.6	26.6	26.6	26.6	26.6
	37°30'08"	06/02/80-07/09/80	37.0	14.3	+ 6.1(- 8.2)	E	30	13G1	37.0	37.0	0	37.0	15.0
	122°06'52"		37.0		+ 1.5(-12.8)	A	6	2103	8.8	37.0	37.0	37.0	0
	37°30'05"	07/09/80-08/08/80	30.0	13.7	+ 6.1(- 7.6)	E	30	13H1	30.0	30.0	0	0	6.0
	122°06'47"		30.0		+ 1.5(-12.2)	A	6	2171	9.1	30.0	30.0	9.1	0
	37°30'09"	08/08/80-09/08/80	31.0	14.1	+ 6.1(- 8.0)	E	30	13I1	0	0	0	0	0
	122°06'50"		31.0		+ 1.5(-12.8)	A	6	2147	0	31.0	31.0	31.0	31.0
	37°30'09"	09/08/80-10/06/80	27.9	13.7	+ 6.1(- 7.6)	E	30	13J1	27.9	27.9	0	0	27.9
	122°06'50"		27.9		+ 1.5(-12.2)	A	6	2261	0	27.9	27.9	27.9	27.9
	37°30'09"	10/06/80-11/07/80	32.1	13.7	+ 6.1(- 7.6)	E	30	13K1	32.1	32.1	0	32.1	32.1
	122°06'50"		32.1		+ 1.5(-12.2)	A	6	2281	0	0	0	0	0
	37°30'09"	11/12/80-12/02/80	20.2	14.0	+ 6.2(- 7.9)	E	30	13L1	20.2	20.2	0	20.2	20.2
	122°06'47"		20.2		+ 1.5(-12.5)	A	6	2313	20.2	20.2	20.2	20.2	20.2
C14	37°29'15"	05/27/80-06/12/80	15.9	6.6	+ 1.5(- 4.9)	A	6	2050	15.9	15.9	15.9	15.9	15.9
	122°04'53"												
C16	37°52'21"	03/07/79-03/22/80	15.0	31.8	+25.6(- 6.1)	A	6	1715	13.3	15.0	15.0	15.0	15.0
	122°26'20"		15.0		+19.5(-12.2)	A	6	1716	15.0	15.0	15.0	15.0	0
			15.0		+ 7.6(-24.1)	A	6	1717	15.0	15.0	15.0	15.0	15.0
			15.0		+ 1.5(-30.2)	A	6	1718	15.0	15.0	15.0	15.0	15.0
	37°52'22"	10/15/79-11/05/79	21.0	31.3	+22.3(- 6.4)	A	6	1881	21.0	21.0	21.0	21.0	21.0
	122°26'25"		21.0		+16.8(-12.2)	A	6	1863	21.0	21.0	21.0	21.0	21.0
			21.0		+ 7.6(-21.3)	A	6	1864	21.0	21.0	21.0	21.0	21.0

Table 3. Continued

Station Number	OBSERVATION INFORMATION								SENSORS IN OPERATION DAYS OF GOOD DATA				
	Latitude(N) Longitude(W)	Dates of Observation	Days of Data	Depth of Water MLLW (Meters)	Depth of Meter (+) Above Bottom (-) Below Surface MLLW	Instrument A=Aanderaa E=Endeco	Samples per Hour	Control Number	Speed	Direction	Pressure	Temperature	Conductivity
	37°52'18"	04/02/80-04/25/80	23.6	31.3	+22.9(- 8.5)	A	6	1958	23.6	23.6	0	23.6	0
	122°26'31"		23.6		+16.8(-14.6)	A	6	1959	23.6	23.6	23.6	23.6	23.6
			23.6		+ 7.6(-23.8)	A	6	1960	0	0	0	0	0
	37°52'23"	04/25/80-05/14/80	19.1	29.3	+22.9(- 6.4)	A	6	1996	19.1	19.1	19.1	19.1	19.1
	122°26'31"		19.1		+16.8(-12.5)	A	6	1997	19.1	19.1	19.1	19.1	19.1
			19.1		+ 7.6(-21.6)	A	6	1998	19.1	19.1	19.1	19.1	0
	37°52'10"	05/14/80-06/11/80	27.1	29.3	+22.9(- 6.4)	A	6	2028	27.1	27.1	27.1	27.1	27.1
	122°26'40"		27.1		+16.8(-12.5)	A	6	2029	27.1	27.1	27.1	27.1	27.1
			27.1		+ 7.6(-21.6)	A	6	2030	0	0	0	0	0
	37°52'24"	06/11/80-07/01/80	20.8	29.3	+22.9(- 6.4)	A	6	2075	0	0	0	0	0
	122°26'25"		20.8		+16.8(-12.5)	A	6	2076	18.7	18.7	18.7	18.7	18.7
			20.8		+ 7.6(-21.6)	A	6	2077	0	0	0	0	0
	37°52'24"	07/01/80-07/17/80	15.8	29.6	+22.9(- 6.7)	A	6	2109	0	0	0	0	0
	122°26'22"		15.8		+16.8(-12.8)	A	6	2110	0	0	0	0	0
			15.8		+ 7.6(-22.0)	A	6	2111	0	0	0	0	0
	37°52'25"	07/17/80-08/04/80	17.9	29.5	+22.9(- 6.7)	A	6	2141	6.4	6.4	6.4	6.4	6.4
	122°26'22"		17.9		+16.8(-12.8)	A	6	2142	17.9	17.9	17.9	17.9	17.9
			17.9		+ 7.6(-22.0)	A	6	2143	17.9	17.9	17.9	17.9	17.9
	37°52'24"	08/04/80-08/20/80	16.1	28.9	+22.9(- 6.1)	A	6	2173	16.1	16.1	16.1	16.1	16.1
	122°26'24"		16.1		+16.8(-12.1)	A	6	2174	16.1	16.1	16.1	16.1	16.1
			16.1		+ 7.6(-21.4)	A	6	2175	0	0	0	0	0
	37°52'22"	08/20/80-09/08/80	19.0	29.3	+22.9(- 6.4)	A	6	2204	19.0	19.0	19.0	19.0	19.0
	122°26'25"		19.0		+16.8(-12.5)	A	6	2205	0	0	0	0	0
			19.0		+ 7.6(-21.6)	A	6	2206	0	0	0	0	0

Table 3. Continued

Station Number	OBSERVATION INFORMATION									SENSORS IN OPERATION DAYS OF GOOD DATA				
	Latitude(N) Longitude(W)	Dates of Observation	Days of Data	Depth of Water MLLW (Meters)	Depth of Meter (+) Above Bottom (-) Below Surface MLLW	Instrument A=Aanderaa E=Endeco	Samples per Hour	Control Number	Speed	Direction	Pressure	Temperature	Conductivity
	37°52'24"	09/08/80-09/24/80	15.9	29.1	+22.9(- 6.1)	A	6	2232	15.9	15.9	15.9	15.9	15.9
	122°26'23"		15.9		+16.8(-12.2)	A	6	2232	15.9	15.9	15.9	15.9	15.9
			15.9		+ 7.6(-21.4)	A	6	2234	15.9	15.9	15.9	15.9	15.9
	37°52'23"	09/24/80-10/16/80	22.1	29.3	+22.9(- 6.4)	A	6	2262	22.1	22.1	22.1	22.1	22.1
	122°26'23"		22.1		+16.8(-12.5)	A	6	2263	22.1	22.1	22.1	22.1	22.1
			22.1		+ 7.6(-21.6)	A	6	2264	22.1	22.1	22.1	22.1	22.1
	37°52'26"	10/16/80-11/05/80	19.9	28.9	+22.9(- 6.1)	A	6	2302	19.9	19.9	19.9	0	19.9
	122°26'23"		19.9		+16.8(-12.2)	A	6	2303	19.9	19.9	19.9	19.9	19.9
			19.9		+ 7.6(-21.4)	A	6	2304	19.9	19.9	0	19.9	19.9
	37°52'23"	11/05/80-11/24/80	19.1	28.9	+22.9(- 6.1)	A	6	2333	0	0	19.1	0	0
	122°26'24"		19.1		+16.8(-12.2)	A	6	2334	19.1	19.1	19.1	19.1	19.1
			19.1		+ 7.6(-21.4)	A	6	2335	19.1	19.1	19.1	19.1	0
C16A	37°52'22"	10/07/70-10/15/79	8.4	36.6	+22.9(-13.7)	A	6	1862	8.4	8.4	8.4	8.4	8.4
	122°26'25"		8.4		+16.8(-19.8)	A	6	1863	8.4	8.4	8.4	8.4	8.4
			8.4		+ 7.6(-29.0)	A	6	1864	8.4	8.4	8.4	8.4	8.4
C17	37°54'54"	03/07/79-04/06/79	30.0	11.6	+ 5.2(- 6.4)	A	6	1705	30.0	30.0	0	30.0	30.0
	122°26'52"		30.0		+ 1.5(-10.1)	A	6	1706	30.0	30.0	30.0	30.0	30.0
C18	37°58'30"	03/22/79-04/06/79	15.0	21.4	+15.2(- 6.1)	A	6	1730	15.0	15.0	0	15.0	0
	122°26'33"		15.0		+11.9(- 9.3)	E	30	18A1	15.0	15.0	0	15.0	15.0
			15.0		+ 9.2(-12.2)	A	6	1731	0	0	15.0	0	15.0
			15.0		+ 6.8(-14.6)	E	30	18A2	4.4	4.4	0	4.4	4.4

Table 3. Continued

Station Number	OBSERVATION INFORMATION									SENSORS IN OPERATION DAYS OF GOOD DATA				
	Latitude(N) Longitude(W)	Dates of Observation	Days of Data	Depth of Water MLLW (Meters)	Depth of Meter (+) Above Bottom (-) Below Surface MLLW	Instrument A=Aanderaa E=Endeco	Samples per Hour	Control Number	Speed	Direction	Pressure	Temperature	Conductivity
	37°58'24"	04/06/79-05/07/79	31.0	21.2	+15.2(- 6.1)	A	6	1749	31.0	31.0	31.0	31.0	31.0
	122°26'31"		31.0		+12.0(- 9.4)	E	30	18B1	31.1	31.1	31.1	31.1	31.1
			31.0		+ 9.2(-12.2)	A	6	1750	18.7	31.0	31.0	31.0	31.0
			31.0		+ 6.8(-14.6)	E	30	18B2	0	0	0	0	0
	37°58'41"	04/04/80-04/11/80	7.1	21.0	+15.2(- 5.8)	A	6	1969	0	7.1	6.5	7.1	7.1
	122°26'17"		7.1		+ 9.2(-11.9)	A	6	1970	7.1	7.1	7.1	7.1	7.1
			7.1		+ 2.1(-18.9)	A	6	1971	7.1	7.1	7.1	7.1	7.1
	37°58'41"	04/11/80-05/02/80	20.8	21.4	+15.2(- 6.1)	A	6	1978	20.8	20.8	20.8	20.8	0
	122°26'18"		20.8		+ 9.2(-12.2)	A	6	1979	0	0	0	0	0
			20.8		+ 2.1(-19.2)	A	6	1980	20.8	20.8	20.8	20.8	20.8
	37°58'46"	05/02/80-05/21/80	19.0	20.5	+15.2(- 5.2)	A	6	2006	19.0	19.0	19.0	19.0	19.0
	122°26'19"		19.0		+ 9.2(-11.3)	A	6	2007	19.0	19.0	19.0	19.0	19.0
			19.0		+ 2.1(-18.3)	A	6	2008	19.0	19.0	19.0	19.0	19.0
	37°58'44"	05/21/80-06/10/80	19.8	21.0	+15.2(- 5.8)	A	6	2045	19.8	19.8	19.8	19.8	19.8
	122°26'18"		19.8		+ 9.2(-11.9)	A	6	2046	19.8	19.8	19.8	19.8	0
			19.8		+ 2.1(-18.9)	A	6	2047	0	0	0	0	0
	37°58'43"	06/10/80-07/01/80	21.0	21.6	+15.2(- 6.4)	A	6	2072	21.0	21.0	17.8	21.0	21.0
	122°26'16"		21.0		+ 9.2(-12.5)	A	6	2073	21.0	21.0	21.0	21.0	21.0
			21.0		+ 2.1(-19.5)	A	6	2074	21.0	21.0	21.0	21.0	0
	37°58'46"	07/01/80-07/17/80	16.0	21.4	+15.2(- 6.1)	A	6	2106	16.0	16.0	16.0	16.0	16.0
	122°26'15"		16.0		+ 9.2(-12.2)	A	6	2107	0	0	0	0	0
			16.0		+ 2.1(-19.2)	A	6	2108	16.0	16.0	16.0	16.0	16.0
	37°58'45"	07/17/80-08/04/80	18.0	21.4	+15.2(- 6.1)	A	6	2144	18.0	18.0	18.0	0	18.0
	122°26'15"		18.0		+ 9.2(-12.2)	A	6	2145	18.0	18.0	18.0	18.0	0
			18.0		+ 2.1(-19.2)	A	6	2146	18.0	18.0	18.0	18.0	0

Table 3. Continued

Station Number	OBSERVATION INFORMATION									SENSORS IN OPERATION DAYS OF GOOD DATA				
	Latitude(N) Longitude(W)	Dates of Observation	Days of Data	Depth of Water MLLW (Meters)	Depth of Meter (+) Above Bottom (-) Below Surface MLLW	Instrument A=Aanderaa E=Endeco	Samples per Hour	Control Number	Speed	Direction	Pressure	Temperature	Conductivity
	37°58'43"	08/04/80-08/20/80	15.8	21.6	+15.2(- 6.4)	A	6	2176	15.8	15.8	15.8	15.8	15.8
	122°26'17"		15.8		+ 9.2(-12.5)	A	6	2177	15.8	15.8	15.8	15.8	15.8
			15.8		+ 2.1(-19.5)	A	6	2178	15.8	15.8	15.8	15.8	14.0
	37°58'46"	08/20/80-09/08/80	19.0	21.4	+15.2(- 6.1)	A	6	2200	19.0	19.0	19.0	19.0	19.0
	122°26'14"		19.0		+ 9.2(-12.2)	A	6	2201	0	0	19.0	0	19.0
			19.0		+ 2.1(-19.2)	A	6	2202	18.2	19.0	19.0	19.0	19.0
	37°58'47"	09/08/80-09/25/80	17.0	21.2	+15.2(- 6.1)	A	6	2229	17.0	17.0	0	17.0	17.0
	122°26'12"		17.0		+ 9.2(-12.2)	A	6	2230	15.7	17.0	17.0	17.0	0
			17.0		+ 2.1(-19.2)	A	6	2231	17.0	17.0	17.0	17.0	0
	37°58'49"	09/25/80-10/16/80	21.0	21.4	+15.2(- 6.1)	A	6	2265	21.0	21.0	21.0	21.0	21.0
	122°26'12"		21.0		+ 9.2(-12.1)	A	6	2266	21.0	21.0	21.0	21.0	21.0
			21.0		+ 2.1(-19.2)	A	6	2267	21.0	21.0	21.0	21.0	21.0
	37°58'48"	10/16/80-11/05/80	20.1	21.2	+15.2(- 6.1)	A	6	2297	0	0	20.1	0	20.1
	122°26'12"		20.1		+ 9.2(-12.2)	A	6	2298	20.1	20.1	20.1	20.1	20.1
			20.1		+ 2.1(-19.2)	A	6	2299	6.6	20.1	6.4	20.1	20.1
	37°58'47"	11/05/80-11/24/80	18.8	21.2	+15.2(- 6.1)	A	6	2336	18.8	18.8	18.8	18.8	18.8
	122°26'13"		18.8		+ 9.2(-12.2)	A	6	2337	18.8	18.8	18.8	18.8	18.8
			18.8		+ 2.1(-19.2)	A	6	2338	0	0	18.8	18.8	0
C19	38°01'36"	03/21/79-04/05/79	15.0	3.5	+ 0.9(- 2.4)	A	6	1728	15.0	15.0	15.0	15.0	15.0
	122°25'29"												
	38°01'24"	09/11/80-10/02/80	21.0	3.3	+ 1.5(- 1.8)	A	6	2241	15.4	21.0	0	21.0	0
	122°26'12"												
	38°01'24"	10/02/80-10/20/80	18.1	3.3	+ 1.5(- 1.8)	A	6	2275	7.4	12.6	18.1	18.1	0
	122°26'12"												

Table 3. Continued

Station Number	OBSERVATION INFORMATION									SENSORS IN OPERATION DAYS OF GOOD DATA				
	Latitude(N) Longitude(W)	Dates of Observation	Days of Data	Depth of Water MLLW (Meters)	Depth of Meter (+) Above Bottom (-) Below Surface MLLW	Instrument A=Aanderaa E=Endeco	Samples per Hour	Control Number	Speed	Direction	Pressure	Temperature	Conductivity
	38°01'30" 122°26'00"	10/20/80-11/06/80	17.0	3.3	+ 1.5(- 1.8)	A	6	2305	0	17.0	17.0	17.0	17.0
C20	38°06'38" 122°29'35"	03/28/79-04/12/79	15.0	3.0	+ 0.9(- 2.1)	A	6	1733	15.0	15.0	15.0	15.0	0
	38°06'40" 122°29'37"	10/09/80-10/27/80	18.0	3.3	+ 1.5(- 1.8)	A	6	2290	5.0	18.0	18.0	18.0	18.0
C21	38°09'24" 122°24'21"	03/27/79-04/11/79	15.0	4.0	+ 0.9(- 3.0)	A	6	1734	0	0	15.0	0	15.0
	38°09'25" 122°24'24"	10/08/80-10/24/80	15.9	4.0	+ 1.5(- 2.4)	A	6	2288	11.5	15.9	15.9	15.9	15.9
C22	38°01'51" 122°22'38"	03/22/79-04/10/79	19.0	11.5	+ 2.6(- 8.9)	E	30	22A1	19.0	19.0	0	19.0	19.0
			19.0		+ 1.5(-10.1)	A	6	1732	19.0	19.0	19.0	19.0	19.0
	38°02'06" 122°22'42"	09/09/80-09/25/80	16.0	8.8	+ 5.7(- 3.1)	E	30	22B1	0	0	0	0	0
			16.0		+ 3.0(- 5.8)	A	6	2235	16.0	16.0	0	0	0
			16.0		+ 1.5(- 7.3)	A	6	2236	0	0	0	0	0
	38°02'02" 122°22'45"	09/25/80-10/17/80	21.9	9.0	+ 5.9(- 3.1)	E	30	22C1	21.9	21.9	0	21.9	21.9
			21.9		+ 2.7(- 6.1)	A	6	2268	21.9	21.9	21.9	21.9	21.9
			21.9		+ 1.5(- 7.3)	A	6	2269	0	0	0	0	0
C23	38°04'28" 122°20'33"	03/21/79-04/05/79	15.0	2.1	+ 0.9(- 1.2)	A	6	1729	15.0	15.0	15.0	0	15.0

Table 3. Continued

Station Number	Latitude(N) Longitude(W)	Dates of Observation	Days of Data	Depth of Water MLLW (Meters)	Depth of Meter (+) Above Bottom (-) Below Surface MLLW	Instrument A=Aanderaa E=Endeco	Samples per Hour	Control Number	Speed	Direction	Pressure	Temperature	Conductivity
	OBSERVATION INFORMATION								SENSORS IN OPERATION DAYS OF GOOD DATA				
	38°04'28" 122°20'42"	09/30/80-10/16/80	16.0	1.8	+ 0.9(- 0.9)	A	6	2273	16.0	16.0	16.0	16.0	16.0
	38°04'28" 122°20'42"	10/16/80-11/04/80	19.0	1.8	+ 0.9(- 0.9)	A	6	2300	19.0	19.0	0	19.0	19.0
C24	38°03'43" 122°13'07"	03/20/79-04/18/79	29.2	22.7	+16.8(- 5.8)	A	6	1725	29.2	29.2	29.2	29.2	29.2
			29.2		+10.8(-11.9)	A	6	1726	0	0	0	0	0
		03/20/79-04/23/79	34.0		+ 2.1(-20.4)	A	6	1727	11.1	29.3	34.0	34.0	32.4
	38°03'39" 122°12'57"	04/18/79-05/04/79	16.0	17.8	+12.5(- 5.2)	A	6	1752	16.0	16.0	16.0	16.0	16.0
			16.0		+ 6.4(-11.3)	A	6	1753	16.0	16.0	16.0	16.0	16.0
			16.0		+ 2.1(-15.9)	A	6	1754	0	16.0	16.0	16.0	16.0
	38°03'40" 122°13'16"	10/23/79-11/09/79	17.1	21.8	+15.6(- 6.1)	A	6	1895	17.1	17.1	17.1	17.1	17.1
			17.1		+ 9.5(-12.2)	A	6	1896	17.1	17.1	17.1	17.1	17.1
			17.1		+ 1.8(-19.8)	A	6	1897	17.1	27.2	0	17.1	0
	38°03'38" 122°12'59"	11/02/79-12/04/79	32.0	17.0	+11.0(- 6.1)	A	6	1917	32.0	32.0	32.0	32.0	32.0
			32.0		+ 4.9(-12.2)	A	6	1918	32.0	32.0	32.0	32.0	0
			32.0		+ 2.1(-14.9)	A	6	1919	32.0	32.0	32.0	32.0	32.0
	38°03'41" 122°13'06"	04/02/80-04/11/80	8.9	18.3	+11.9(- 6.4)	A	6	1961	8.9	8.9	7.2	8.9	8.9
			8.9		+ 5.8(-12.5)	A	6	1962	7.0	8.9	8.9	8.9	0
			8.9		+ 2.1(-16.2)	A	6	1963	8.9	8.9	8.9	8.9	0
	38°03'41" 122°13'05"	04/11/80-05/02/80	20.8	16.8	+11.9(- 4.9)	A	6	1974	20.8	20.8	20.8	20.8	20.8
			20.8		+ 5.8(-11.0)	A	6	1975	20.8	20.8	20.8	20.8	20.8
			20.8		+ 2.1(-14.6)	A	6	1976	20.8	20.8	20.8	20.8	20.8

Table 3. Continued

Station Number	OBSERVATION INFORMATION									SENSORS IN OPERATION DAYS OF GOOD DATA				
	Latitude(N) Longitude(W)	Dates of Observation	Days of Data	Depth of Water MLLW (Meters)	Depth of Meter (+) Above Bottom (-) Below Surface MLLW	Instrument A=Aanderaa E=Endeco	Samples per Hour	Control Number	Speed	Direction	Pressure	Temperature	Conductivity
	38°03'41"	05/02/80-05/21/80	19.0	17.8	+11.9(- 5.8)	A	6	2003	19.0	19.0	19.0	19.0	19.0
	122°13'05"		19.0		+ 5.8(-11.9)	A	6	2004	19.0	19.0	19.0	19.0	19.0
			19.0		+ 2.1(-15.6)	A	6	2005	19.0	19.0	19.0	19.0	19.0
	38°03'38"	05/21/80-05/29/80	8.0	17.7	+11.9(- 5.8)	A	6	2042	8.0	8.0	8.0	8.0	8.0
	122°13'06"		8.0		+ 5.8(-11.9)	A	6	2043	8.0	8.0	8.0	8.0	0
			8.0		+ 2.1(-15.6)	A	6	2044	8.0	8.0	8.0	8.0	0
	38°03'39"	05/29/80-06/17/80	18.8	18.0	+11.9(- 6.1)	A	6	2057	18.8	18.8	18.8	18.8	18.8
	122°13'06"		18.8		+ 5.8(-12.2)	A	6	2058	18.8	18.8	18.8	18.8	0
			18.8		+ 2.1(-15.9)	A	6	2059	18.8	18.8	0	18.8	18.8
	38°03'38"	06/17/80-07/08/80	21.1	17.9	+11.9(- 6.1)	A	6	2088	21.1	21.1	21.1	21.1	21.1
	122°13'04"		21.1		+ 5.8(-12.2)	A	6	2089	5.3	5.3	5.3	0	5.3
			21.1		+ 2.1(-15.9)	A	6	2090	0	0	21.1	0	21.1
	38°03'40"	07/08/80-07/29/80	21.0	17.8	+11.9(- 5.8)	A	6	2118	21.0	21.0	21.0	21.0	21.0
	122°13'03"		21.0		+ 5.8(-11.9)	A	6	2119	0	0	21.0	0	21.0
			21.0		+ 2.1(-15.6)	A	6	2120	11.0	11.0	11.0	11.0	11.0
	38°03'39"	07/29/80-08/14/80	15.8	17.9	+11.9(- 6.1)	A	6	2159	15.8	15.8	0	15.8	15.8
	122°13'05"		15.8		+ 5.8(-12.2)	A	6	2160	7.8	7.8	7.8	7.8	7.8
			15.8		+ 2.1(-15.6)	A	6	2161	15.8	15.8	15.8	15.8	15.8
	38°03'38"	08/14/80-09/02/80	19.0	17.9	+11.9(- 6.1)	A	6	2192	19.0	19.0	19.0	19.0	19.0
	122°13'06"		19.0		+ 5.8(-12.2)	A	6	2193	19.0	19.0	19.0	19.0	19.0
			19.0		+ 2.1(-15.6)	A	6	2194	19.0	19.0	19.0	19.0	19.0
	38°03'40"	09/02/80-09/17/80	15.0	17.9	+11.9(- 6.1)	A	6	2222	15.0	15.0	15.0	15.0	15.0
	122°13'07"		15.0		+ 5.8(-12.2)	A	6	2223	15.0	15.0	15.0	15.0	15.0
			15.0		+ 2.1(-15.6)	A	6	2224	15.0	15.0	15.0	15.0	15.0

Table 3. Continued

Station Number	OBSERVATION INFORMATION									SENSORS IN OPERATION DAYS OF GOOD DATA				
	Latitude(N) Longitude(W)	Dates of Observation	Days of Data	Depth of Water MLLW (Meters)	Depth of Meter (+) Above Bottom (-) Below Surface MLLW	Instrument A=Aanderaa E=Endeco	Samples per Hour	Control Number	Speed	Direction	Pressure	Temperature	Conductivity
	38°03'40"	09/17/80-10/06/80	18.9	17.9	+11.9(- 6.1)	A	6	2250	18.9	18.9	18.9	18.9	18.9
	122°13'07"		18.9		+ 5.8(-12.2)	A	6	2251	18.9	18.9	18.9	18.9	18.9
			18.9		+ 2.1(-15.6)	A	6	2252	18.9	18.9	18.9	18.9	0
	38°03'39"	10/06/80-10/22/80	16.0	17.8	+11.9(- 5.8)	A	6	2285	16.0	16.0	16.0	16.0	16.0
	122°13'08"		16.0		+ 5.8(-11.9)	A	6	2286	16.0	16.0	16.0	0	0
			16.0		+ 2.1(-15.6)	A	6	2287	16.0	16.0	16.0	16.0	16.0
	38°03'38"	10/22/80-11/12/80	21.0	17.6	+11.9(- 5.8)	A	6	2309	21.0	21.0	21.0	21.0	21.0
	122°13'08"		21.0		+ 5.8(-11.9)	A	6	2310	21.0	21.0	21.0	21.0	0
			21.0		+ 2.1(-15.6)	A	6	2311	21.0	21.0	21.0	21.0	21.0
	38°03'38"	11/12/80-12/01/80	18.9	18.1	+11.9(- 6.1)	A	6	2351	14.3	18.9	18.9	18.9	18.9
	122°13'06"		18.9		+ 5.8(-12.2)	A	6	2352	10.3	18.9	0	18.9	18.9
			18.9		+ 2.1(-15.9)	A	6	2353	9.3	18.9	0	18.9	18.9
C25	38°02'20"	04/05/79-04/24/79	19.8	14.3	+ 7.9(- 6.4)	A	6	1743	19.8	19.8	29.8	19.8	19.8
	122°08'01"		19.8		+ 1.8(-12.5)	A	6	1744	19.8	19.8	0	19.8	0
C25A	38°01'59"	11/01/79-11/16/79	15.8	12.3	+ 6.1(- 6.1)	A	6	1909	15.8	15.8	15.8	15.8	15.8
	122°08'59"		15.8		+ 1.8(-10.4)	A	6	1910	15.7	15.7	0	15.7	15.7
C26	38°03'10"	04/04/79-04/20/79	15.8	10.1	+ 1.5(- 8.5)	A	6	1745	10.5	10.5	15.8	15.8	0
	122°05'26"												
	38°03'06"	10/29/79-11/14/79	16.0	10.7	+ 7.1(- 3.6)	E	30	26A1	13.0	0	0	13.0	13.0
	122°05'25"		16.0		+ 1.5(- 9.2)	A	6	1907	8.7	16.0	16.0	16.0	16.0

Table 3. Continued

Station Number	OBSERVATION INFORMATION									SENSORS IN OPERATION DAYS OF GOOD DATA				
	Latitude(N) Longitude(W)	Dates of Observation	Days of Data	Depth of Water MLLW (Meters)	Depth of Meter (+) Above Bottom (-) Below Surface MLLW	Instrument A=Aanderaa E=Endeco	Samples per Hour	Control Number	Speed	Direction	Pressure	Temperature	Conductivity
	38°03'10" 122°05'34"	11/16/79-12/03/79	17.0	7.6	+ 3.0(- 4.6)	A	6	1938	17.0	17.0	17.0	17.0	17.0
	38°03'06" 122°05'25"	10/28/80-11/17/80	19.9	10.5	+ 4.6(- 5.8)	A	6	2316	19.9	19.9	19.9	0	19.9
			19.9		+ 1.5(- 8.8)	A	6	2317	19.9	19.9	19.9	19.9	19.9
C27	38°04'50" 122°04'56"	04/04/79-04/20/79	16.0	9.5	+ 1.5(- 7.9)	A	6	1746	0	16.0	16.0	16.0	0
	38°04'43" 122°05'02"	10/29/79-12/06/79	37.8	8.7	+ 5.1(- 3.6)	E	30	27A1	37.7	37.7	0	0	37.7
			37.8		+ 1.5(- 7.3)	A	6	1905	37.8	37.8	37.8	37.8	37.8
C28	38°07'08" 122°03'12"	04/17/79-05/03/79	15.9	2.1	+ 0.9(- 1.2)	A	6	1759	15.9	15.9	15.9	15.9	15.9
	38°07'07" 122°03'22"	11/01/79-11/16/79	15.0	2.1	+ 0.9(- 1.2)	A	6	1913	15.0	15.0	15.0	15.0	15.0
C29	38°04'25" 122°01'18"	04/18/79-05/03/79	15.8	6.3	+ 1.5(- 4.6)	A	6	1760	15.8	15.8	15.8	15.8	15.8
	38°04'30" 122°01'27"	10/30/79-12/06/79	37.2	7.9	+ 2.7(- 5.2)	E	30	29A1	13.0	37.2	0	0	37.2
C30	38°05'23" 122°00'27"	04/18/79-05/03/79	15.1	10.4	+ 1.5(- 8.8)	A	6	1761	15.1	15.1	14.4	15.1	14.4
	38°05'20" 122°00'26"	10/30/79-12/06/79	37.2	8.9	+ 4.7(- 4.2)	E	30	30A1	37.2	37.2	0	37.2	24.0
			37.2		+ 1.5(- 7.3)	A	6	1903	37.2	37.2	37.2	37.2	37.2

Table 3. Continued

Station Number	OBSERVATION INFORMATION									SENSORS IN OPERATION DAYS OF GOOD DATA				
	Latitude(N) Longitude(W)	Dates of Observation	Days of Data	Depth of Water MLLW (Meters)	Depth of Meter (+) Above Bottom (-) Below Surface MLLW	Instrument A=Aanderaa E=Endeco	Samples per Hour	Control Number	Speed	Direction	Pressure	Temperature	Conductivity
C31	38°03'53" 121°57'20"	04/18/79-05/03/79	15.2	2.1	+ 0.9(- 1.2)	A	6	1762	15.2	15.2	15.2	15.2	15.2
C32	38°02'52"	04/04/79-05/04/79	30.0	12.3	+12.2(-12.2)	A	6	1747	30.0	30.0	30.0	30.0	30.0
	121°55'18"		30.0		+ 1.8(-10.4)	A	6	1748	30.0	30.0	30.0	30.0	30.0
	38°02'51"	10/24/79-11/15/79	21.1	12.3	+12.1(-12.2)	A	6	1898	21.1	21.1	21.1	21.1	21.1
	121°55'17"		21.1		+ 1.8(-10.4)	A	6	1899	9.7	21.1	21.1	21.1	21.1
	38°02'54"	11/15/79-12/04/79	18.9	12.2	+12.1(-12.2)	A	6	1932	18.9	18.9	18.9	18.9	18.9
	121°55'25"		18.9		+ 1.8(-10.4)	A	6	1933	5.2	18.9	18.9	18.9	0
	38°02'58"	12/07/79-01/10/80	34.0	9.8	+ 2.4(- 7.6)	E	30	32A1	34.0	34.0	0	34.0	0
	121°55'07"		34.0		+ 1.5(- 8.2)	A	6	1944	3.4	34.0	34.0	34.0	34.0
	38°02'56" 121°55'06"	01/10/80-02/06/80	27.9	12.2	+ 4.6(- 7.6)	E	30	32B1	27.9	27.9	0	27.9	0
	38°02'51"	02/06/80-03/07/80	29.1	9.5	+ 4.0(- 5.5)	E	30	32C1	27.8	27.8	0	27.8	0
	121°55'01"		29.1		+ 1.5(- 7.9)	A	6	2049	4.8	4.8	29.1	29.1	29.1
	38°02'55" 121°55'16"	03/07/80-04/10/80	33.8	10.1	+ 4.6(- 5.5)	E	30	32D1	33.8	33.8	0	33.8	0
	38°02'53" 121°55'20"	04/10/80-05/09/80	29.0	8.5	+ 4.6(- 3.9)	E	30	32E1	0	0	0	0	0
	38°02'58"	05/09/80-06/06/80	27.9	8.5	+ 3.7(- 4.8)	E	30	32F1	27.9	27.9	0	27.9	0
	121°55'29"		27.9		+ 1.5(- 7.0)	A	6	2079	27.9	27.9	0	27.9	27.9
	38°02'59"	06/06/80-07/02/80	25.3	8.5	+ 3.7(- 4.8)	E	30	32G1	25.3	25.3	0	0	0
	121°55'26"		25.3		+ 1.5(- 7.0)	A	6	2104	6.2	25.3	0	25.3	25.3
	38°03'00" 121°55'26"	07/02/80-08/05/80	34.0	7.9	+ 3.7(- 4.2)	E	30	32H1	34.0	34.0	0	34.0	0

Table 3. Continued

Station Number	OBSERVATION INFORMATION									SENSORS IN OPERATION DAYS OF GOOD DATA				
	Latitude(N) Longitude(W)	Dates of Observation	Days of Data	Depth of Water MLLW (Meters)	Depth of Meter (+) Above Bottom (-) Below Surface MLLW	Instrument A=Aanderaa E=Endeco	Samples per Hour	Control Number	Speed	Direction	Pressure	Temperature	Conductivity
	38°03'00" 121°55'35"	08/05/80-09/05/80	31.0	7.9	+ 3.7(- 4.2)	E	30	32I1	31.0	31.0	0	31.0	0
	38°03'01" 121°55'40"	09/05/80-10/02/80	27.3	7.6	+ 3.7(- 3.9)	E	30	32J1	27.3	27.3	0	27.3	0
	38°03'01" 121°55'40"	09/05/80-10/02/80	27.3	7.6	+ 1.8(- 5.8)	E	30	32J2	27.3	27.3	0	27.3	0
	38°03'01" 121°55'40"	10/02/80-10/17/80	14.7	7.6	+ 3.7(- 3.9)	E	30	32K1	14.7	14.7	0	14.7	0
	38°03'01" 121°55'40"	10/02/80-10/17/80	14.7	7.6	+ 1.8(- 5.8)	E	30	32K2	14.7	14.7	0	14.7	0
	38°03'01" 121°55'40"	10/17/80-11/14/80	28.0	8.5	+ 3.7(- 4.8)	E	30	32L1	28.0	28.0	0	28.0	0
	38°03'01" 121°55'40"	10/17/80-11/14/80	28.0	8.5	+ 1.8(- 6.7)	E	30	32L2	28.0	28.0	0	0	0
	38°03'00" 121°55'37"	11/14/80-12/18/80	34.0	8.8	+ 3.7(- 5.1)	E	30	32M1	34.0	34.0	0	34.0	0
	38°03'00" 121°55'37"	11/14/80-12/18/80	34.0	8.8	+ 3.1(- 5.7)	E	30	32M2	0	34.0	0	34.0	0
C33	38°03'42" 121°51'00"	04/16/79-05/03/79	16.8	11.5	+ 6.1(- 5.5)	A	6	1755	16.8	16.8	16.8	16.8	16.8
			16.8		+ 1.5(-10.1)	A	6	1756	16.8	16.8	16.8	16.8	16.8
	38°03'42" 121°51'02"	11/06/79-11/26/79	20.0	12.1	+ 9.2(- 3.0)	A	6	1920	20.0	20.0	20.0	20.0	20.0
			20.0		+ 6.1(- 6.1)	A	6	1921	0	0	0	0	0
			20.0		+ 2.1(-10.1)	A	6	1922	20.0	20.0	20.0	20.0	20.0

Table 3. Continued

Station Number	OBSERVATION INFORMATION									SENSORS IN OPERATION DAYS OF GOOD DATA				
	Latitude(N) Longitude(W)	Dates of Observation	Days of Data	Depth of Water MLLW (Meters)	Depth of Meter (+) Above Bottom (-) Below Surface MLLW	Instrument A=Aanderaa E=Endeco	Samples per Hour	Control Number	Speed	Direction	Pressure	Temperature	Conductivity
C34	38°01'49" 121°50'03"	04/17/79-05/03/79	16.9	8.4	+ 1.5(- 6.7)	A	6	1758	0	0	0	0	0
	38°01'58" 121°50'07"	11/15/79-11/27/79	12.5	8.5	+ 1.5(- 7.0)	A	6	1931	12.5	12.5	12.5	12.5	0
	38°01'57"	10/29/80-11/14/80	16.0	8.2	+ 4.0(- 4.3)	A	6	2318	16.0	16.0	16.0	16.0	16.0
	121°50'08"		16.0		+ 1.5(- 6.7)	A	6	2319	16.0	16.0	16.0	16.0	16.0
C35	38°03'30" 121°48'13"	04/16/79-05/03/79	16.8	8.3	+ 1.5(- 6.7)	A	6	1757	0	0	16.8	16.8	16.8
	38°03'31"	11/15/79-12/03/79	18.2	9.0	+ 4.9(- 4.0)	A	6	1936	18.2	18.2	18.2	18.2	0
	121°48'15"		18.2		+ 1.5(- 7.3)	A	6	1937	12.1	18.1	16.4	18.2	16.4
	38°03'31"	10/27/80-11/13/80	16.8	9.2	+ 4.6(- 4.6)	A	6	2314	0	0	16.8	0	16.8
	121°48'16"		16.8		+ 1.5(- 7.6)	A	6	2315	0	0	16.8	16.8	16.8
C201	37°46'56" 122°37'02"	09/13/79-09/28/79	15.0	11.3	+ 4.3(- 7.0)	E	30	201A	15.0	15.0	0	15.0	15.0
	37°46'56" 122°37'02"	09/28/79-10/25/79	27.1	11.3	+ 4.3(- 7.0)	E	30	201B	16.0	16.0	0	16.0	16.0
C202	37°45'32" 122°36'20"	09/13/79-09/28/79	15.0	11.6	+ 4.3(- 7.3)	E	30	202A	15.0	15.0	0	15.0	15.0
	37°45'32" 122°36'20"	09/28/79-10/02/79	5.1	11.6	+ 4.3(- 7.3)	E	30	202B	5.1	5.1	0	5.1	5.1
	37°45'32"	10/03/79-10/25/79	21.9	11.6	+ 4.6(- 7.3)	E	30	202C	21.9	21.9	0	21.9	21.9

Table 3. Continued

Station Number	OBSERVATION INFORMATION								SENSORS IN OPERATION DAYS OF GOOD DATA				
	Latitude(N) Longitude(W)	Dates of Observation	Days of Data	Depth of Water MLLW (Meters)	Depth of Meter (+) Above Bottom (-) Below Surface MLLW	Instrument A=Aanderaa E=Endeco	Samples per Hour	Control Number	Speed	Direction	Pressure	Temperature	Conductivity
C203	37°48'58" 122°32'41"	09/12/79-09/28/79	15.9	10.7	+ 4.3(- 6.4)	E	30	203A	0	15.9	0	15.9	15.9
	37°48'58" 122°32'41"	09/28/79-10/02/79	4.9	10.7	+ 4.6(- 6.1)	E	30	203B	3.0	3.0	0	3.0	3.0
C204	37°46'08" 122°31'32"	09/13/79-09/28/79	15.0	14.3	+ 4.3(-10.0)	E	30	204A	0	0	0	0	0
	37°46'08" 122°31'32"	09/28/79-10/25/79	26.9	14.3	+ 4.6(- 9.7)	E	30	204B	3.5	26.9	0	0	26.9
C205	37°49'15" 122°30'58"	09/11/79-09/26/79	15.0	14.3	+ 7.6(- 6.7)	A	6	1828	15.0	15.0	15.0	15.0	0
			15.0		+ 1.8(-12.5)	A	6	1829	15.0	15.0	15.0	15.0	15.0
C206	37°47'52" 122°29'19"	09/11/79-09/26/79	15.0	17.1	+ 7.6(- 9.5)	A	6	1830	15.0	15.0	15.0	15.0	15.0
			15.0		+ 1.8(-15.2)	A	6	1831	15.0	15.0	15.0	15.0	15.0
C207	37°48'33" 122°28'58"	09/11/79-09/28/79	16.8	30.6	+ 7.6(-22.9)	A	6	1832	16.8	16.8	16.8	16.8	16.8
C208	37°48'42" 122°27'59"	09/10/79-09/25/79	15.1	24.5	+ 7.6(-16.8)	A	6	1820	15.1	15.1	15.1	15.1	15.1
C209	37°50'42" 122°27'29"	09/10/79-09/25/79	15.0	17.4	+14.3(- 3.1)	E	30	209A	15.0	15.0	0	15.0	15.0
			15.0		+11.3(- 6.1)	A	6	1821	15.0	15.0	15.0	15.0	15.0
			15.0		+ 5.2(-12.1)	E	30	209A	15.0	15.0	0	15.0	15.0
			15.0		+ 1.5(-15.9)	A	6	1822	1.7	15.0	15.0	15.0	15.0

Table 3. Continued

Station Number	OBSERVATION INFORMATION									SENSORS IN OPERATION DAYS OF GOOD DATA				
	Latitude(N) Longitude(W)	Dates of Observation	Days of Data	Depth of Water MLLW (Meters)	Depth of Meter (+) Above Bottom (-) Below Surface MLLW	Instrument A=Aanderaa E=Endeco	Samples per Hour	Control Number	Speed	Direction	Pressure	Temperature	Conductivity
	37°50'44"	11/12/80-12/01/80	19.0	17.2	+11.3(- 5.8)	A	6	2348	19.0	9.0	19.0	19.0	19.0
	122°27'26"		19.0		+ 5.2(-11.9)	A	6	2349	0	0	0	0	
			19.0		+ 1.5(-15.6)	A	6	2350	11.0	19.0	0	19.0	0
C210	37°51'34"	09/14/79-10/01/79	17.0	3.8	+ 1.5(- 2.4)	A	6	1845	17.0	17.0	17.0	17.0	17.0
	122°28'05"												
C211	37°47'52"	09/11/79-10/12/79	30.9	21.8	+15.7(- 6.1)	E	30	211A	30.9	30.9	0	30.9	30.9
	122°25'51"		30.9		+ 9.5(-12.2)	A	6	1833	27.7	30.9	30.9	30.9	30.9
			30.9		+ 1.5(-20.1)	A	6	1834	5.7	30.9	25.9	30.9	29.9
	37°48'52"	10/12/79-11/08/79	26.7	21.4	+15.3(- 6.1)	E	30	211B	26.7	26.7	0	26.7	26.7
	122°25'54"		26.7		+ 9.5(-11.9)	A	6	1873	12.5	26.7	26.7	26.7	0
			26.7		+ 1.5(-19.8)	A	6	1874	7.2	26.7	26.7	26.7	26.7
	37°48'53"	11/08/79-12/07/79	28.9	21.8	+15.7(- 6.1)	E	30	211C	28.9	28.9	0	28.9	5.0
	122°25'54"		28.9		+ 9.5(-12.2)	A	6	1927	26.3	28.9	28.9	28.9	28.9
			28.9		+ 1.5(-20.1)	A	6	1928	8.5	28.9	28.9	28.9	28.9
	37°48'52"	12/07/79-01/21/80	44.7	21.8	+ 7.8(-14.0)	E	30	211D	0	0	0	0	0
	122°25'53"		44.7		+ 1.5(-20.1)	A	6	1945	9.2	28.0	40.7	40.7	0
	37°48'55"	01/16/80-02/20/80	35.0	16.5	+ 7.6(- 8.9)	E	30	211E	0	0	0	0	0
	122°26'52"												
	37°48'55"	01/16/80-02/20/80	35.0	16.5	+ 2.7(-13.8)	E	30	211F	13.0	35.0	0	0	35.0
	122°26'52"												
	37°48'52"	04/01/80-04/15/80	14.0	21.6	+15.6(- 6.1)	A	6	1952	14.0	14.0	14.0	14.0	14.0
	122°25'54"		14.0		+ 9.5(-12.1)	A	6	1953	0	0	0	0	0
			14.0		+ 1.5(-20.1)	A	6	1954	14.0	14.0	14.0	14.0	14.0

Table 3. Continued

Station Number	OBSERVATION INFORMATION									SENSORS IN OPERATION DAYS OF GOOD DATA				
	Latitude(N) Longitude(W)	Dates of Observation	Days of Data	Depth of Water MLLW (Meters)	Depth of Meter (+) Above Bottom (-) Below Surface MLLW	Instrument A=Aanderaa E=Endeco	Samples per Hour	Control Number	Speed	Direction	Pressure	Temperature	Conductivity
	37°48'52"	04/15/80-05/09/80	24.0	21.2	+15.6(- 5.8)	A	6	1990	24.0	24.0	24.0	24.0	24.0
	122°26'03"		24.0		+ 9.5(-11.9)	A	6	1991	24.0	24.0	24.0	24.0	24.0
			24.0		+ 1.5(-19.8)	A	6	1992	24.0	24.0	24.0	24.0	0
	37°48'52"	05/09/80-05/28/80	19.0	21.2	+15.6(- 5.8)	A	6	2016	0	0	0	0	0
	122°26'03"		19.0		+ 9.5(-11.9)	A	6	2017	0	0	0	0	0
			19.0		+ 1.5(-19.8)	A	6	2018	0	0	0	0	0
	37°48'56"	05/28/80-06/02/80	5.0	19.9	+13.8(- 6.1)	A	6	2054	0	0	0	0	0
	122°25'52"												
	37°48'57"	06/02/80-06/23/80	20.8	21.6	+15.6(- 6.1)	A	6	2064	20.8	20.8	20.8	20.8	20.8
	122°25'51"		20.8		+ 9.5(-12.2)	A	6	2055	20.8	20.8	20.8	20.8	20.8
			20.8		+ 1.5(-20.1)	A	6	2056	2.7	20.8	20.8	20.8	20.8
	37°48'53"	06/23/80-07/09/80	16.1	22.3	+16.8(- 5.5)	A	6	2092	16.1	16.1	16.1	16.1	16.1
	122°25'55"		16.1		+10.7(-11.6)	A	6	2093	16.1	16.1	16.1	16.1	16.1
			16.1		+ 1.5(-20.7)	A	6	2094	5.7	16.1	16.1	16.1	16.1
	37°48'52"	07/09/80-07/30/80	21.0	21.6	+15.6(- 6.1)	A	6	2124	21.0	21.0	21.0	21.0	21.0
	122°25'55"		21.0		+ 9.5(-12.2)	A	6	2125	13.4	13.4	13.4	12.9	12.9
			21.0		+ 1.5(-20.1)	A	6	2126	0	0	21.0	0	21.0
	37°48'51"	07/30/80-08/19/80	19.8	21.4	+15.6(- 5.8)	A	6	2165	9.7	9.7	9.7	9.7	0
	122°25'55"		19.8		+ 9.5(-11.9)	A	6	2166	0	0	19.8	0	0
			19.8		+ 1.5(-19.8)	A	6	2167	7.7	19.8	19.8	19.8	0
	37°48'52"	08/19/80-09/03/80	15.0	21.6	+15.6(- 6.1)	A	6	2197	15.0	15.0	15.0	15.0	15.0
	122°25'54"		15.0		+ 9.5(-12.2)	A	6	2198	15.0	15.0	15.0	15.0	15.0
			15.0		+ 1.5(-20.1)	A	6	2199	5.8	15.0	0	15.0	15.0

Table 3. Continued

Station Number	OBSERVATION INFORMATION									SENSORS IN OPERATION DAYS OF GOOD DATA				
	Latitude(N) Longitude(W)	Dates of Observation	Days of Data	Depth of Water MLLW (Meters)	Depth of Meter (+) Above Bottom (-) Below Surface MLLW	Instrument A=Aanderaa E=Endeco	Samples per Hour	Control Number		Speed	Direction	Pressure	Temperature	Conductivity
	37°48'52"	09/03/80-09/22/80	19.0	21.6	+15.6(- 6.1)	A	6	2225		19.0	19.0	19.0	19.0	19.0
	122°25'55"		19.0		+ 9.5(-12.2)	A	6	2226		4.5	19.0	19.0	19.0	19.0
			19.0		+ 1.5(-20.1)	A	6	2227		9.8	19.0	19.0	19.0	19.0
	37°48'51"	09/22/80-10/02/80	9.5	21.8	+15.6(- 6.1)	A	6	2254		8.3	8.3	8.3	8.3	0
	122°25'55"		9.5		+ 9.5(-12.2)	A	6	2255		0	0	0	0	0
			9.5		+ 1.5(-20.1)	A	6	2256		1.0	9.5	9.5	0	0
	37°48'52"	10/02/80-10/22/80	19.9	21.8	+15.6(- 6.1)	A	6	2277		15.9	15.9	15.9	15.9	15.9
	122°25'55"		19.9		+ 9.5(-12.2)	A	6	2278		11.8	15.9	15.9	15.9	15.9
			19.9		+ 1.5(-20.1)	A	6	2279		0	0	0	0	0
	37°48'51"	10/22/80-11/06/80	15.0	22.1	+15.6(- 6.7)	A	6	2306		15.0	15.0	15.0	15.0	15.0
	122°25'55"		15.0		+ 9.5(-12.8)	A	6	2307		15.0	15.0	15.0	7.0	7.0
	37°48'52"	11/06/80-11/24/80	18.2	21.6	+15.6(- 6.1)	A	6	2339		18.2	18.2	18.2	18.2	18.2
	122°26'00"		18.2		+ 9.5(-12.2)	A	6	2340		18.2	18.2	18.2	18.2	18.2
			18.2		+ 1.5(-20.1)	A	6	2341		0	0	0	0	0
C212	37°53'14"	09/24/79-10/09/79	15.0	12.2	+ 8.8(- 3.4)	A	6	1855		0	15.0	6.0	15.0	15.0
	122°24'47"		15.0		+ 5.8(- 6.4)	A	6	1856		15.0	15.0	15.0	15.0	15.0
	37°53'05"	11/13/80-12/01/80	17.8	11.9	+ 7.6(- 4.3)	E	30	212A		17.8	0	0	17.8	17.8
	122°24'42"		17.8		+ 5.8(- 6.1)	A	6	2347		17.8	17.8	0	17.8	0
C213	37°54'11"	10/11/79-10/30/79	19.0	10.4	+ 4.6(- 5.8)	A	6	1875		19.0	19.0	19.0	19.0	19.0
	122°27'32"													

Table 3. Continued

Station Number	OBSERVATION INFORMATION									SENSORS IN OPERATION DAYS OF GOOD DATA				
	Latitude(N) Longitude(W)	Dates of Observation	Days of Data	Depth of Water MLLW (Meters)	Depth of Meter (+) Above Bottom (-) Below Surface MLLW	Instrument A=Aanderaa E=Endeco	Samples per Hour	Control Number	Speed	Direction	Pressure	Temperature	Conductivity
C214	37°56'28" 122°27'42"	09/20/79-10/05/79	15.0	6.2	+ 1.5(- 4.6)	A	6	1849	15.0	15.0	15.0	15.0	0
C215	37°56'27" 122°27'11"	09/21/79-10/22/79	30.9	12.5	+ 6.1(- 6.4)	A	6	1851	19.8	30.9	30.9	30.9	30.9
			30.9		+ 5.8(- 6.7)	E	30	215A	30.9	30.9	0	30.9	30.9
			30.9		+ 1.5(-11.0)	A	6	1852	2.0	30.9	30.9	22.2	30.9
	37°56'42" 122°27'15"	10/04/79-10/23/79	18.9	12.8	+ 6.1(- 6.7)	A	6	1865	4.1	18.9	18.9	18.9	18.9
	37°56'32" 122°27'10"	08/05/80-08/22/80	17.0	13.2	+ 6.1(- 7.0)	A	6	2179	0	0	0	0	0
			17.0		+ 1.5(-11.6)	A	6	2180	9.5	17.0	0	17.0	17.0
	37°56'32" 122°27'10"	08/22/80-09/10/80	19.1	13.2	+ 6.1(- 7.0)	A	6	2210	19.1	19.1	19.1	19.1	19.1
		08/22/80-08/29/80	6.2		+ 1.5(-11.6)	A	6	2211	0	6.2	6.2	6.2	6.2
		08/29/80-09/10/80	13.0		+ 1.5(-11.6)	A	6	2221	0	0	13.0	0	0
	37°56'32" 122°27'10"	09/10/80-10/01/80	20.8	13.2	+ 6.1(- 7.0)	A	6	2239	20.8	20.8	20.8	20.8	20.8
			20.8		+ 1.5(-11.6)	A	6	2240	20.1	20.8	20.8	20.8	20.8
C216	37°56'28" 122°25'36"	09/21/79-10/09/79	17.9	13.8	+ 6.1(- 6.4)	A	6	1853	15.2	17.9	17.9	17.9	17.9
			17.9		+ 1.8(-12.2)	A	6	1854	2.7	17.9	17.9	17.9	17.9
	37°56'23" 122°25'36"	08/28/80-09/15/80	18.7	14.1	+ 7.9(- 6.1)	A	6	2214	18.7	0	18.7	0	0
			18.7		+ 1.5(-12.5)	A	6	2215	17.5	18.7	18.7	18.7	18.7
	37°56'21" 122°25'36"	09/15/80-10/01/80	16.2	14.1	+ 7.9(- 6.1)	A	6	2243	16.2	16.2	16.2	16.2	16.2
			16.2		+ 1.5(-12.5)	A	6	2244	0	0	0	0	0
C217	37°55'56" 122°24'38"	09/27/79-10/17/79	20.0	6.7	+ 3.7(- 3.0)	E	30	217A	20.0	3.0	0	8.5	20.0

Table 3. Continued

Station Number	OBSERVATION INFORMATION								SENSORS IN OPERATION DAYS OF GOOD DATA				
	Latitude(N) Longitude(W)	Dates of Observation	Days of Data	Depth of Water MLLW (Meters)	Depth of Meter (+) Above Bottom (-) Below Surface MLLW	Instrument A=Aanderaa E=Endeco	Samples per Hour	Control Number	Speed	Direction	Pressure	Temperature	Conductivity
C218	37°55'15" 122°23'48"	09/19/79-10/05/79	16.1	2.1	+ 0.9(- 1.2)	A	6	1848	16.1	16.1	16.1	16.1	8.8
C219	37°54'11" 122°22'21"	10/05/79-10/22/79	17.0	1.8	+ 1.5(- 0.3)	A	6	1866	17.0	17.0	17.0	17.0	0
C220	37°50'40" 122°21'41"	10/09/79-10/26/79	17.2	5.8	+ 2.7(- 3.1)	E	30	220A	17.2	11.0	0	17.2	17.2
C221	37°52'37" 122°21'32"	10/01/79-10/17/79	16.1	2.4	+ 1.5(- 0.9)	A	6	1860	16.1	16.1	16.1	16.1	16.1
	37°52'35" 122°21'26"	11/10/80-11/28/80	18.0	2.5	+ 1.5(- 0.9)	A	6	2345	0	0	0	0	0
C222	37°51°08" 122°18'40"	09/18/79-10/05/79	15.9	2.0	+ 0.9(- 0.9)	A	6	1847	15.9	15.9	15.9	15.9	0
	37°51'09" 122°18'45"	11/10/80-11/28/80	18.0	2.0	+ 0.9(- 0.9)	A	6	2346	18.0	18.0	0	18.0	0
C223	37°49'30" 122°20'47"	10/05/79-10/22/79	17.2	4.4	+ 0.9(- 3.7)	A	6	1867	17.2	17.2	17.2	17.2	17.2
C224	37°50'15" 122°23'23"	10/11/79-10/26/79	15.2	9.1	+ 6.1(- 3.0)	A	6	1876	15.2	15.2	15.2	15.2	15.2
			15.2		+ 3.0(- 6.1)	A	6	1877	15.2	15.2	15.2	15.2	0

Table 3. Continued

Station Number	OBSERVATION INFORMATION									SENSORS IN OPERATION DAYS OF GOOD DATA				
	Latitude(N) Longitude(W)	Dates of Observation	Days of Data	Depth of Water MLLW (Meters)	Depth of Meter (+) Above Bottom (-) Below Surface MLLW	Instrument A=Aanderaa E=Endeco	Samples per Hour	Control Number	Speed	Direction	Pressure	Temperature	Conductivity
C225	37°47'28" 122°22'25"	09/25/79-10/17/79	20.9	19.8	+13.1(- 6.7)	A	6	1857	16.2	18.0	18.0	18.0	18.0
			20.9		+ 6.1(-13.7)	A	6	1858	0	0	0	0	0
			20.9		+ 2.0(-17.8)	A	6	1859	0	0	0	0	0
	37°47'23" 122°22'20"	10/17/79-11/05/79	18.8	19.2	+13.1(- 6.1)	A	6	1889	18.8	18.8	18.8	18.8	18.8
			18.8		+ 6.1(-13.1)	A	6	1890	3.0	18.8	18.8	18.8	18.8
			18.8		+ 1.8(-17.1)	A	6	1891	4.5	18.8	18.8	18.8	0
C226	37°48'15" 122°21'26"	10/02/79-10/17/79	15.3	8.4	+ 1.5(- 7.0)	A	6	1861	5.5	15.3	15.3	15.3	15.3
	37°48'16" 122°21'30"	11/14/80-12/04/80	20.0	8.4	+ 1.5(- 7.0)	A	6	2354	20.0	20.0	20.0	20.0	20.0
C227	38°02'11" 122°08'41"	10/31/79-11/15/79	15.0	9.9	+ 3.0(- 6.7)	A	6	1911	3.0	15.0	15.0	15.0	15.0
C228	38°01'43" 122°08'55"	11/01/79-11/16/79	15.7	12.8	+ 3.7(- 9.2)	A	6	1912	15.7	15.7	14.9	15.7	15.7
C229	38°08'16" 122°04'53"	11/01/79-11/16/79	15.0	9.6	+ 5.2(- 4.6)	A	6	1914	15.0	15.0	15.0	15.0	15.0
			15.0		+ 2.1(- 7.6)	A	6	1915	0	0	0	0	0
C230	38°08'50" 122°03'23"	11/01/79-11/16/79	15.0	6.8	+ 0.9(- 5.8)	A	6	1916	14.8	14.8	14.8	14.8	4.0

Table 3. Continued

Station Number	Latitude(N) Longitude(W)	Dates of Observation	Days of Data	Depth of Water MLLW (Meters)	Depth of Meter (+) Above Bottom (-) Below Surface MLLW	Instrument A=Aanderaa E=Endeco	Samples per Hour	Control Number	Speed	Direction	Pressure	Temperature	Conductivity
	OBSERVATION INFORMATION								SENSORS IN OPERATION DAYS OF GOOD DATA				
C235	38°04'21" 121°52'30"	11/07/79-11/30/79	23.1	6.1	+ 0.9(- 5.2)	A	6	1923	0	0	0	0	0
	38°04'21" 121°51'33"	10/30/80-11/19/80	20.0	6.1	+ 3.1(- 3.0)	E	30	235A	20.0	20.0	0	0	0
C237	38°03'52" 122°02'31"	10/30/79-12/12/79	43.7	8.4	+ 4.2(- 4.2)	E	30	237A	16.0	12.0	0	16.0	16.0
			43.7		+ 1.5(- 6.9)	A	6	1906	0	0	0	0	0
	38°03'53" 122°02'29"	10/31/80-11/17/80	17.0	7.8	+ 4.8(- 3.0)	E	30	237B	16.9	16.9	0	16.9	16.9
			17.0		+ 1.5(- 6.4)	A	6	2326	17.0	17.0	5.8	17.0	17.0
C238	38°03'12" 122°02'58"	10/30/79-11/14/79	15.2	8.7	+ 1.5(- 7.3)	A	6	1904	15.2	15.2	15.2	15.2	15.2
C239	38°03'27" 121°59'34"	10/24/79-11/14/79	21.0	13.0	+ 9.9(- 3.1)	E	30	239A	21.0	21.0	0	21.0	21.0
			21.0		+ 7.0(- 6.1)	A	6	1900	21.0	21.0	21.0	21.0	21.0
			21.0		+ 1.5(-11.6)	A	6	1901	21.0	21.0	21.0	21.0	21.0
	38°03'28" 121°59'35"	11/14/79-12/04/79	19.8	12.3	+ 9.2(- 3.1)	E	30	239B	19.8	19.8	0	19.8	5.0
			19.8		+ 6.4(- 5.8)	A	6	1934	19.8	19.8	19.8	19.8	19.8
			19.8		+ 1.5(-10.7)	A	6	1935	19.8	19.8	19.8	19.8	19.8
C243	38°02'32" 121°50'17"	11/13/79-11/30/79	17.0	3.0	+ 1.5(- 1.2)	A	6	1930	17.0	17.0	17.0	17.0	0
	38°02'45" 121°50'20"	10/29/80-11/14/80	15.9	3.0	+ 1.5(- 1.5)	A	6	2323	12.5	12.5	11.5	12.5	11.5

Table 3. Continued

Station Number	OBSERVATION INFORMATION									SENSORS IN OPERATION DAYS OF GOOD DATA				
	Latitude(N) Longitude(W)	Dates of Observation	Days of Data	Depth of Water MLLW (Meters)	Depth of Meter (+) Above Bottom (-) Below Surface MLLW	Instrument A=Aanderaa E=Endeco	Samples per Hour	Control Number	Speed	Direction	Pressure	Temperature	Conductivity
C246	38°01'48" 121°50'51"	11/15/79-11/30/79	15.7	6.2	+ 1.5(- 4.6)	A	6	1929	8.5	15.7	15.7	15.7	15.7
	38°01'46" 121°50'46"	10/30/80-11/19/80	20.0	7.7	+ 3.0(- 4.6)	A	6	2324	20.0	20.0	20.0	0	0
			20.0		+ 2.1(- 5.5)	A	6	2325	2.7	20.0	20.0	20.0	0
C302	37°47'40" 122°20'39"	07/22/80-08/11/80	20.1	8.0	+ 5.0(- 3.0)	E	30	302A	20.0	20.0	0	20.0	20.0
			20.1		+ 1.5(- 6.4)	A	6	2149	18.7	18.7	18.7	18.7	18.7
C303	37°47'40" 122°17'09"	07/22/80-08/11/80	20.0	11.7	+ 1.5(-10.1)	A	6	2150	20.0	20.0	20.0	20.0	20.0
C304	37°45'27" 122°21'28"	07/08/80-07/24/80	16.1	17.2	+11.0(- 6.1)	A	6	2115	10.7	10.7	10.7	10.7	0
			16.1		+ 4.9(-12.2)	A	6	2116	0	0	0	0	16.1
			16.1		+ 2.1(-14.9)	A	6	2117	16.1	16.1	0	16.1	16.1
C305	37°46'07" 122°19'31"	06/19/80-07/02/80	12.9	6.3	+ 0.9(- 5.5)	A	6	2091	4.4	12.9	12.9	12.9	12.9
	37°46'06" 122°19'32"	07/02/80-07/18/80	15.9	7.5	+ 0.9(- 7.0)	A	6	2112	0	15.9	15.9	15.9	15.9
	37°46'06" 122°19'32"	07/18/80-08/04/80	17.0	6.6	+ 0.9(- 5.8)	A	6	2140	3.7	17.0	17.0	17.0	0
C306	37°42'28" 122°20'58"	07/14/80-07/31/80	16.8	11.3	+ 5.2(- 6.1)	A	6	2138	16.8	16.8	16.8	16.8	16.8
			16.8		+ 1.5(- 9.8)	A	6	2139	16.8	16.8	16.8	16.8	16.8
	37°42'28" 122°20'58"	07/03/80-08/19/80	19.2	11.3	+ 6.1(- 5.2)	A	6	2168	0	0	0	0	0
			19.2		+ 1.5(- 9.8)	A	6	2169	19.2	19.2	19.2	19.2	19.2

Table 3. Continued

Station Number	OBSERVATION INFORMATION									SENSORS IN OPERATION DAYS OF GOOD DATA				
	Latitude(N) Longitude(W)	Dates of Observation	Days of Data	Depth of Water MLLW (Meters)	Depth of Meter (+) Above Bottom (-) Below Surface MLLW	Instrument A=Aanderaa E=Endeco	Samples per Hour	Control Number	Speed	Direction	Pressure	Temperature	Conductivity
C307	37°39'15" 122°21'50"	08/05/80-08/22/80	16.9	4.6	+ 1.5(- 3.0)	A	6	2181	16.9	16.9	16.9	16.9	0
	37°39'15" 122°21'50"	08/22/80-09/08/80	17.1	4.6	+ 1.5(- 3.0)	A	6	2207	0	0	0	0	0
C308	37°40'32" 122°16'51"	08/01/80-08/20/80	18.9	6.3	+ 1.5(- 4.9)	A	6	2172	8.5	5.4	0	18.9	18.9
	37°40'35" 122°16'50"	08/20/80-09/05/80	16.0	6.3	+ 1.5(- 4.9)	A	6	2203	0	0	0	0	0
C309	37°37'31" 122°17'46"	06/11/80-07/14/80	32.9	10.1	+ 5.5(- 4.6)	A	6	2081	0	0	32.9	0	32.9
			32.9		+ 1.5(- 8.5)	A	6	2082	0	32.9	32.9	32.9	32.9
C310	37°39'02" 122°13'38"	06/11/80-06/30/80	18.9	2.2	+ 0.9(- 1.2)	A	6	2080	18.9	18.9	18.9	18.9	0
	37°39'06" 122°13'40"	06/30/80-07/16/80	16.0	2.0	+ 0.9(- 1.2)	A	6	2105	8.5	9.5	16.0	16.0	0
C312	37°35'25" 122°14'55"	05/20/80-06/05/80	16.0	14.3	+11.3(- 3.0)	A	6	2039	14.8	14.8	0	14.8	14.8
			16.0		+ 8.2(-12.2)	A	6	2040	16.0	16.0	16.0	16.0	16.0
			16.0		+ 2.4(-11.9)	A	6	2041	11.1	16.0	16.0	16.0	16.0
	37°35'25" 122°14'57"	06/05/80-06/24/80	19.1	14.3	+11.3(- 3.0)	A	6	2068	19.1	19.1	19.1	19.1	19.1
			19.1		+ 8.2(- 6.1)	A	6	2069	19.1	19.1	19.1	19.1	19.1
			19.1		+ 2.4(-11.9)	A	6	2070	0	0	0	0	0

Table 3. Continued

Station Number	OBSERVATION INFORMATION									SENSORS IN OPERATION DAYS OF GOOD DATA				
	Latitude(N) Longitude(W)	Dates of Observation	Days of Data	Depth of Water MLLW (Meters)	Depth of Meter (+) Above Bottom (-) Below Surface MLLW	Instrument A=Aanderaa E=Endeco	Samples per Hour	Control Number	Speed	Direction	Pressure	Temperature	Conductivity
C312	37°35'25" 122°14'58"	06/24/80-07/10/80	15.8	14.1	+11.3(- 2.7)	A	6	2099	15.8	15.8	15.8	15.8	15.8
			15.8		+ 8.2(- 5.8)	A	6	2100	12.5	15.8	15.8	15.8	15.8
			15.8		+ 2.4(-11.9)	A	6	2101	0	15.8	15.8	15.8	15.8
	37°35'26" 122°15'05"	11/06/80-11/26/80	19.9	13.7	+11.3(- 2.4)	A	6	2342	0	19.9	19.9	19.9	19.9
			19.9		+ 8.2(- 5.5)	A	6	2343	0	19.9	19.9	19.9	19.9
			19.9		+ 2.1(-11.6)	A	6	2344	8.9	8.9	8.9	8.9	8.9
C313	37°35'57" 122°11'53"	05/15/80-06/05/80	21.0	1.9	+ 1.5(- 0.3)	A	6	2031	0	0	0	0	0
	37°35'53" 122°12'22"	06/06/80-06/25/80	18.9	2.1	+ 0.9(- 1.2)	A	6	2071	0	0	0	0	0
	37°35'53" 122°12'20"	06/25/80-07/10/80	15.0	2.2	+ 0.9(- 1.2)	A	6	2102	15.0	15.0	15.0	15.0	15.0
C314	38°03'41" 122°25'28"	10/09/80-10/27/80	17.9	2.5	+ 0.9(- 1.5)	A	6	2289	17.9	17.9	17.9	17.9	0
C315	38°02'15" 122°19'02"	09/03/80-10/16/80	16.0	4.5	+ 1.5(- 3.0)	A	6	2274	0	0	16.0	0	16.0
	38°02'15" 122°19'02"	10/16/80-11/04/80	19.1	4.5	+ 1.5(- 3.0)	A	6	2301	19.1	19.1	19.1	19.1	0

Table 3. Continued

Station Number	OBSERVATION INFORMATION								SENSORS IN OPERATION DAYS OF GOOD DATA				
	Latitude(N) Longitude(W)	Dates of Observation	Days of Data	Depth of Water MLLW (Meters)	Depth of Meter (+) Above Bottom (-) Below Surface MLLW	Instrument A=Aanderaa E=Endeco	Samples per Hour	Control Number	Speed	Direction	Pressure	Temperature	Conductivity
C316	38°03'43" 122°16'36"	08/27/80-09/17/80	20.9	11.5	+ 8.4(- 3.1)	E	30	316A	12.0	20.9	0	0	20.9
			20.9		+ 5.5(- 6.1)	A	6	2212	20.9	20.9	20.9	20.9	20.9
	38°03'43" 122°16'40"	09/17/80-10/06/80	18.9	11.5	+ 8.5(- 3.0)	A	6	2252	18.9	18.9	18.9	18.9	18.9
			18.9		+ 5.5(-12.1)	A	6	2245	18.9	18.9	18.9	18.9	18.9
			18.9		+ 1.5(-10.1)	A	6	2246	18.9	18.9	18.9	18.9	0
	38°03'43" 122°16'38"	10/06/80-10/23/80	17.1	11.5	+ 8.5(- 3.0)	A	6	2282	17.1	17.1	17.1	17.1	17.1
			17.1		+ 5.5(- 6.1)	A	6	2283	17.1	17.1	17.1	17.1	0
			17.1		+ 1.5(-10.1)	A	6	2284	0	0	0	0	0
C317	38°04'27" 122°14'34"	09/05/80-09/23/80	18.2	7.7	+ 1.5(- 6.4)	A	6	2228	18.2	18.2	18.2	18.2	18.2
	38°04'26" 122°14'32"	09/23/80-10/10/80	16.9	7.8	+ 1.5(- 6.4)	A	6	2259	16.9	16.9	16.9	16.9	0
	38°04'26" 122°14'32"	10/10/80-10/28/80	18.0	7.8	+ 1.5(- 6.4)	A	6	2291	6.5	18.0	18.0	18.0	0
C320	38°00'29" 122°23'23"	09/11/80-10/02/80	20.9	7.4	+ 1.5(- 5.8)	A	6	2242	0	0	0	0	0
	38°00'29" 122°23'23"	10/02/80-10/22/80	20.1	7.4	+ 1.5(- 5.8)	A	6	2276	11.5	17.8	20.1	20.1	20.1
C321	37°43'14" 122°35'52"	04/17/80-05/19/80	31.9	19.5	+ 7.6(-11.9)	A	6	1999	31.9	31.9	31.9	31.9	31.9

Table 3. Continued

Station Number	Latitude(N) Longitude(W)	Dates of Observation	Days of Data	Depth of Water MLLW (Meters)	Depth of Meter (+) Above Bottom (-) Below Surface MLLW	Instrument A=Aanderaa E=Endeco	Samples per Hour	Control Number	Speed	Direction	Pressure	Temperature	Conductivity
	OBSERVATION INFORMATION								SENSORS IN OPERATION DAYS OF GOOD DATA				
C322	37°48'16" 122°38'20"	04/03/80-04/17/80	14.0	19.6	+ 7.6(-11.9)	A	6	1964	14.0	14.0	14.0	14.0	14.0
	37°48'16" 122°38'23"	04/17/80-06/02/80	46.0	19.2	+ 7.6(-11.6)	A	6	2000	0	0	0	0	0
C323	37°52'26"	08/05/80-08/21/80	15.8	14.3	+ 8.2(- 6.4)	A	6	2182	6.2	6.2	0	0	0
	122°24'10"		15.8		+ 1.5(-12.8)	A	6	2183	15.8	15.8	15.8	15.8	0
	37°52'24"	08/21/80-09/10/80	20.0	14.1	+ 7.9(- 6.1)	A	6	2208	15.6	5.3	20.0	20.0	20.0
	122°24'15"	08/21/80-09/09/80	19.1		+ 1.5(-12.5)	A	6	2209	0	0	0	0	0
	37°52'24"	09/10/80-09/25/80	15.0	14.1	+ 8.0(- 6.1)	A	6	2237	0	0	0	0	0
	122°24'15"	09/09/80-09/25/80	16.0		+ 1.5(-12.5)	A	6	2238	16.0	16.0	16.0	16.0	0

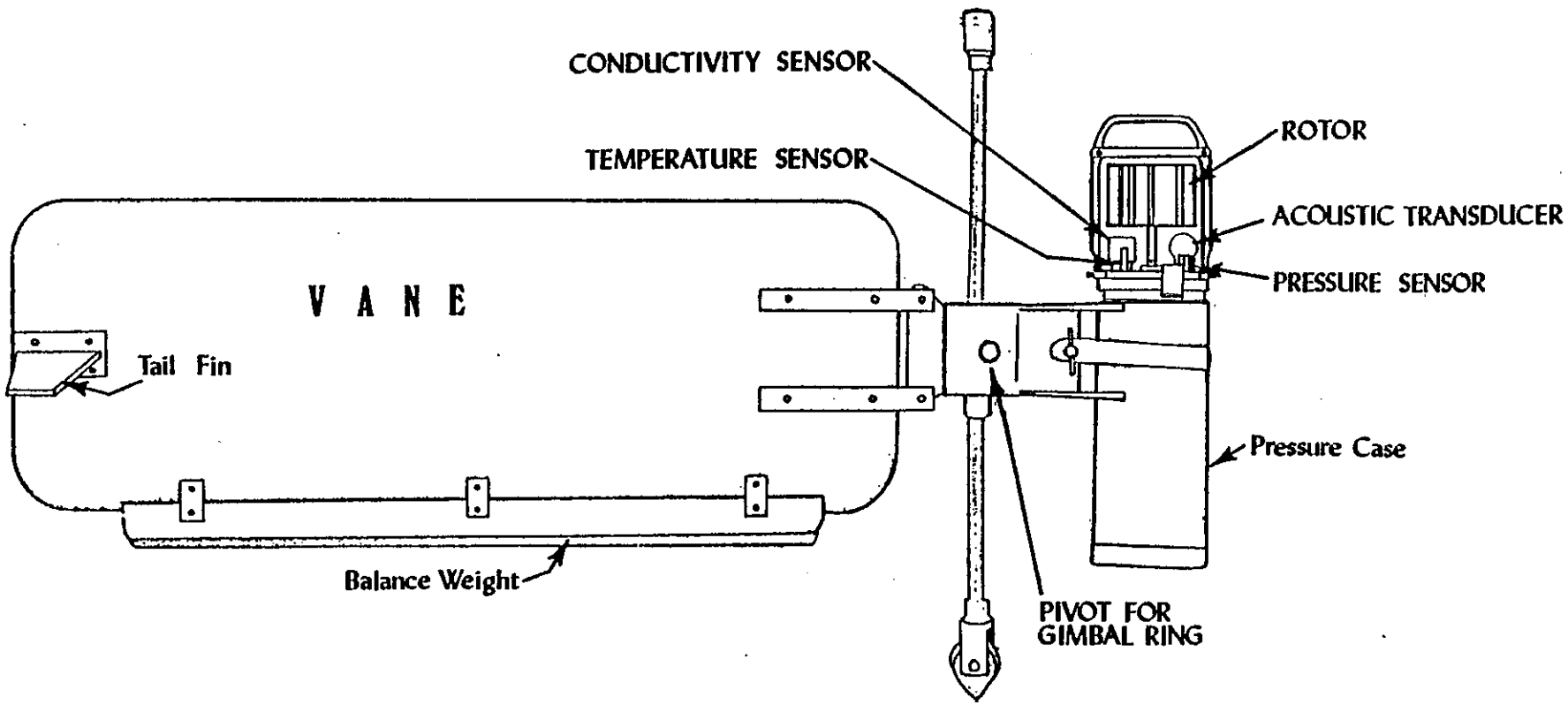

Figure 4. Aanderaa Current Meter

Table 4. Manufacturer's Specifications for Aanderaa RCM4 Current Meter

Weight in Air
Recording unit: 12.5 kg
Vane assembly: 12.0 kg

Dimensions

Overall length: 136 cm
Recording unit diameter: 12.8 cm
Vane size: 36 x 100 cm

Depth Capability
Standard version: 2000 m
High pressure version: 6000 m

Materials Exposed to Sea Water
Pressure case 90/10 CuNi alloy, nickel plated. Other parts acid resistant steel or nickel plated bronze. Vane 8 mm red PVC.

Mooring
Spindle end pieces designed for 14 mm max. diameter wire or rope and force of 2000 kg. A gimbal mounting permits ± 30° deviation between instrument and mooring line.

Measuring Ranges and Accuracies
Current speed: 1.5 to 250 cm/sec
Direction: 0-360° ± 5° magnetic
Temperature: choice between 3 ranges:
Low range: - 2.46°C to 21.40°C
High range: 10.08°C to 36.00°C
Wide range: - 0.34°C to 32.17°C
Standard calibration curves are accurate to +0.1°C. Calibration to ± 0.0125°C is possible.
Conductivity: 0-60 mmho
Pressure: choice between 5 ranges: 0-200 PSI, 0-500 PSI, 0-1000 PSI, 0-5000 PSI, 0-8000 PSI
Accuracy: better than ±1% of range.

Measuring System
Rotary encoder system with sequential measuring of 6 channels by self-balancing bridge. Bridge is balanced in 10 binary steps and gives a 10-bit binary word for each channel. Measuring speed: 4.5 sec/channel.

The channels are: Reference (a control measurement), Temperature, Conductivity (optional), Depth (optional), Current Direction, Current Speed.

Recording System
Serial recording of 10-bit binary words on 6.4 mm magnetic tape by use of short and long pulses. Total storage capacity: 60,000 words. Tape: 183 m on 7.62 cm or 8.25 cm spools. End of record pulse (sync pulse) after each completed cycle.

Telemetry
By crystal controlled pulse coded acoustic carrier 16.385 kHz, 6 words sent in the course of 30 sec. Detecting range with tuned hydrophone receiver is typically 800 m.

Rotor Speed Reduction Gear
6000:1 is standard. 40,000:1 and 1200:1 available on request... These rates are recommended for sampling intervals of 5 to 20 min., 30 to 60 min., and 0.5 to 2.5 min., respectively.

Clock
Accuracy: ± 2 sec/day over temperature range 0-20°C. Operating time on new battery: 3 years.

Sampling Intervals
60, 30, 20, 15, 5, 2.5, 2, 1, and 0.5 min. according to interval selecting plug. The 10 min. plug is standard.

External Triggering
Is possible by applying a 6-volt positive pulse to electric terminal on top end plate. Same terminal also gives output signals (5-volt pulses of negative polarity).

Batteries
Main battery: Tudor 9T1 or similar battery (9-volt battery, 63 x 50 x 80 mm, nonmagnetic)
Clock battery: Mallory type TR-113 (16.6 mm diameter, 21.1 mm long)

integrated into the current meter data acquisition and processing scheme. The addition of time counters to these meters has improved data processing throughput, and allows accurate time assignment to individual data points even when the meter malfunctions.

The RCM4 design is based upon a savonius rotor current speed sensor, a magnetic compass for direction determination, and a thermistor for temperature sensing. The pressure sensor is a bourdon tube driving a potentiometer, and conductivity is determined by an induction-type sensor. An electromechanical encoder (analog-to-digital converter) samples and converts the different parameters to binary signals which are recorded on 6.4-mm magnetic tape; the binary signals are simultaneously transmitted to the surface by means of an acoustic transducer. There, they can be sensed by a hydrophone receiver which can either monitor the RCM4 audibly, or feed the signal directly to a printer for data translation into digital numbers, or to an analog display unit. The measuring cycles of the RCM4 are controlled by a quartz clock for timing accuracy. Power is supplied by batteries capable of recording 183 m of magnetic tape, or approximately 69 days using a 10-minute sampling interval. The RCM4 consists of two main parts; the recording unit, and the vane assembly. The vane assembly has a spindle which can be shackled to the mooring line of subsurface floatation buoys.

The meters were originally calibrated by their inventor, Ivar Aanderaa of Norway. Before each field season, they were recalibrated and checked by the Northwest Regional Calibration Center (in Bellevue, Washington). Routine meter maintenance was performed aboard the McARTHUR.

A graphic sketch of the ENDECO-174 current meter is shown in figure 5 and table 5 presents the specifications for the meter. The ENDECO 174 current meter is an axial-flow, ducted-impeller current meter, which records digital data on 6.4-mm magnetic tape. Recorded quantities include current speed (averaged for sampling interval), instantaneous direction, water temperature, and conductivity. Current speed is determined by measuring the displacement of an encoder disc which is driven by the impeller through a magnetic coupler and reduction gears. Heading of the meter (current direction) is determined and digitized from the output of a damped-magnetic compass. Temperature is

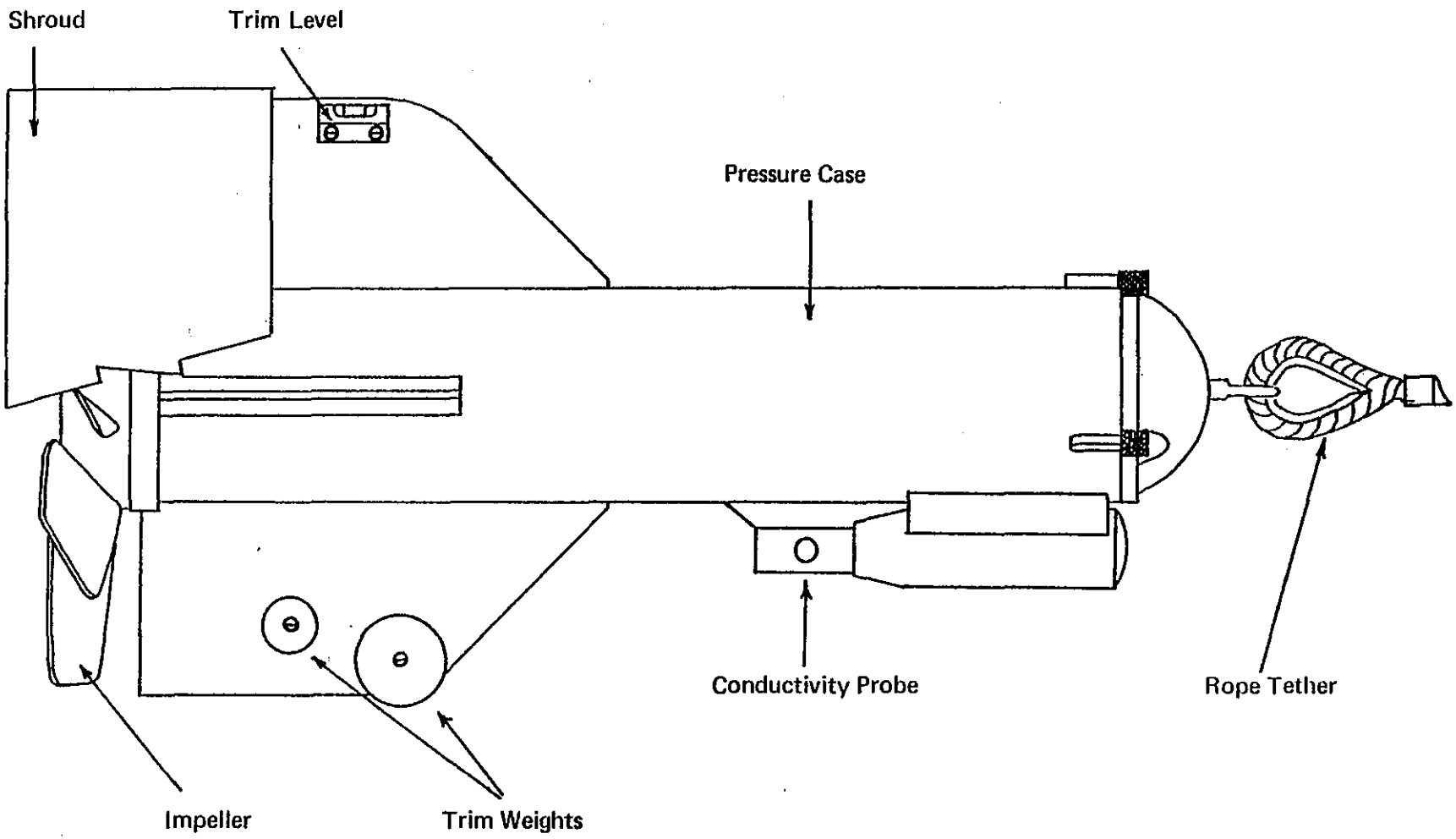

Figure 5. ENDECO Current Meter

Table 5. Manufacturer's Specifications for ENDECO-174 Current Meter

Weight in Air

ENDECO 174: 14 kg (31 lbs)

Dimensions

Overall length: 85.1 cm (33.5 in)
Overall width: 40.6 cm (16 in)

Depth Capability

Standard version: 152 m (500 ft)
High pressure version: 1524 m (5000 ft)

Materials Exposed to Sea Water

Pressure case, impeller, shroud, and vanes: PVC protected with Marine anti-fouling paint. Assorted hardware: stainless steel, plastic.

Mooring

Neutrally buoyant meter connected to mooring line by flexible tether attached by stainless steel swivel.

Measuing Ranges and Accuracies

Current speed: 2.57 to 221.2 cm/sec ±3% of full scale.
Direction: 0 to 360° ±7.2°
Temperature: -5 to 45°C ±0.2°C
Conductivity: 5 to 55 mmho/cm ±0.55 mmho/cm
All measured outputs are computer compensated with individual calibration values.

Batteries

Eight 1.5v "D" size nonmetalic jacket batteries

Measuring System

Speed, direction, temperature, and conductivity sampled and recorded on channels 1, 2, 3, and 4. Speed determined as a displacement of GRAY-Code encoder disc based upon sampling interval. Direction determined as a function of position of GRAY-Code encoder disc used as compass card. Temperature and conductivity circuitry outputs frequency proportional to temperature and conductivity respectively.

Recording System

Recording head: four track
Recording format: eight bits per parameter.
Recording density: 32 bits/cm (80/in)
Storage capacity: 864,000 bits/128 m (420 ft) at 2 min interval
Hourly and daily record marks.

Rotor Speed Reduction Gear

500:1 (maximum resolvable speed at 2-minute sampling interval is 4.34 knots).

Clock

Type: quartz crystal timer
Accuracy: ±4 sec/day

Sampling Intervals

2, 3, 4, 5, 6, and 10 minutes accordin to interval selection plug.

determined by a thermistor encased in stainless steel, and conductivity by an electrodeless-conductivity probe. The ENDECO 174 incorporates a tether line designed to minimize mooring line and wave induced motions. Utilizing a two-minute sampling interval, the data capacity of the tape cartridge is approximately 35 days.

The ENDECO-174 current meters were originally calibrated by the manufacturer (Environmental Devices Corporation). Calibration data unique to each current meter include compass deviation, and National Bureau of Standards calibrated temperature and conductivity test points. Those data, as well as daily internally-generated reference values, are used during data reduction to compute corrections for each measured parameter. The current meters were periodically recalibrated when returned to the manufacturer for repairs or for required retrofits, and were examined periodically in a USGS test tank to check that operation was within normal tolerances. Instruments were tested or recalibrated at approximately six-month intervals. Additionally, current-meter impellers were rated at the USGS Gulf Coast Hydroscience Center, Bay St. Louis, Mississsippi. Generally, the impeller ratings were found to be linear in the test range of 0 to 250 cm/sec and in agreement with manufacturer supplied calibration values. Routine maintenance was performed aboard the R/V POLARIS or in USGS laboratories.

Table 6 presents the general specifications for the MMI electromagnetic current meter. The sensor for this model is spherically shaped and has no moving parts; therefore, it is not susceptible to clogging or fouling. To properly measure horizontal water velocity in the presence of vertical water motion, a meter must possess a cosinusoidal tilt response. If the tilt response is other than cosine, vertical motion components will be translated into horizontal velocities, thus giving a false indication. Each meter is provided with a solid-state electromagnetic flow sensor, the key element in its ability to accurately measure both X and Y directional components in a horizontal plane. These sensor properties make the MMI a particularly practical instrument for making S/N measurements.

During the San Francisco Bay Area Circulation Survey, four mooring systems were used. Each of the four mooring systems was routinely modified to

Table 6. Manufacturer's Specifications for Marsh McBirney 585 Electromagnetic Current Meter

Measurement

X and Y components of water velocity perpendicular to flow probe.

Panel Meter Ranges

Switch selectable ranges of 0 to ± 2 ft./sec., 0 to ± 5 ft./sec. and 0 to ± 10 ft./sec., are standard on the Models 511, 523, 524, and 527. (Metric scales of ± 60, ± 150 and ± 300 cm./sec., are available at no extra charge.)

Gain Accuracy

± 2%

Long Term Drift

0.02 m/sec. or less

Tilt Accuracy

Cosinusoidal within ± 5% up to ± 60° tilt angles

Azimuth Accuracy

Cosinusoidal within ± 5% or ± 0.02 m/sec., whichever is greater.

Resolution

.009 m/sec/ T, where T is the output time constant.

Flow Sensing Volume

A sphere about 3 probe diameters in diameter

Output Signal

Portable Signal Processor: ± 1V = ± 3.05 m/sec.
Rack Mounted Processor: ± 5V = ± 3.05 m/sec.

Output Time Constant
1 second, standard

Flow Probe Cable

6.1 m thermoplastic jacketed (longer lengths available)

Depth Capability

Up to 1830 m

meet the criteria for a particular type of current monitoring situation; depending upon current speed, depth, and method of deployment. Figure 6 shows three of the four mooring types. The fourth type is a bottom mounted mid-level platform.

The heavy taut-wire mooring (figure 6a) was designed for moderate to strong currents and was deployed only by the McARTHUR. The mooring consisted of a heavy (3,000 to 4,000 pound) railroad wheel cluster anchor, an acoustic release, two to four current meters, reserve flotation buoys, subsurface buoy, and a lighted surface marker buoy.

The light taut-wire mooring (Figure 6b) was designed for moderate depths, 6.1 to 15.2 meters, and currents less than 2.5 knots. The system consisted of an anchor (700 pounds), an acoustic release, one or two current meters, a small subsurface buoy, and a lighted buoy as a surface marker.

The bottom platform (figure 6c) was a light-weight metal platform which was deployed in water as shallow as 2.1 meters at MLLW, and in moderate to strong currents. The bottom platform mooring system, with an Aanderaa current meter, was adjusted to measure currents at either 0.9 or 1.5 meters above bottom. The bottom platform does not have mooring motion, which can contaminate the Aanderaa current data.

The mid-level platform was designed for water depths of 6.1 meters or greater, and current speeds of up to 3.7 knots. The current meter height was adjustable from 3.0 to 6.1 meters above the platform base.

2.3. Data Processing

Processing, as it is used in this report, means converting the raw data that were recorded on magnetic tape inside the data measurement systems into a computer compatible, easily accessible, efficiently stored form; in engineering units with all errors due to obvious mechanical or electronic failures corrected; and timing checked for accuracy. Data processing is the crucial link between physically collecting oceanographic data and actually using it.

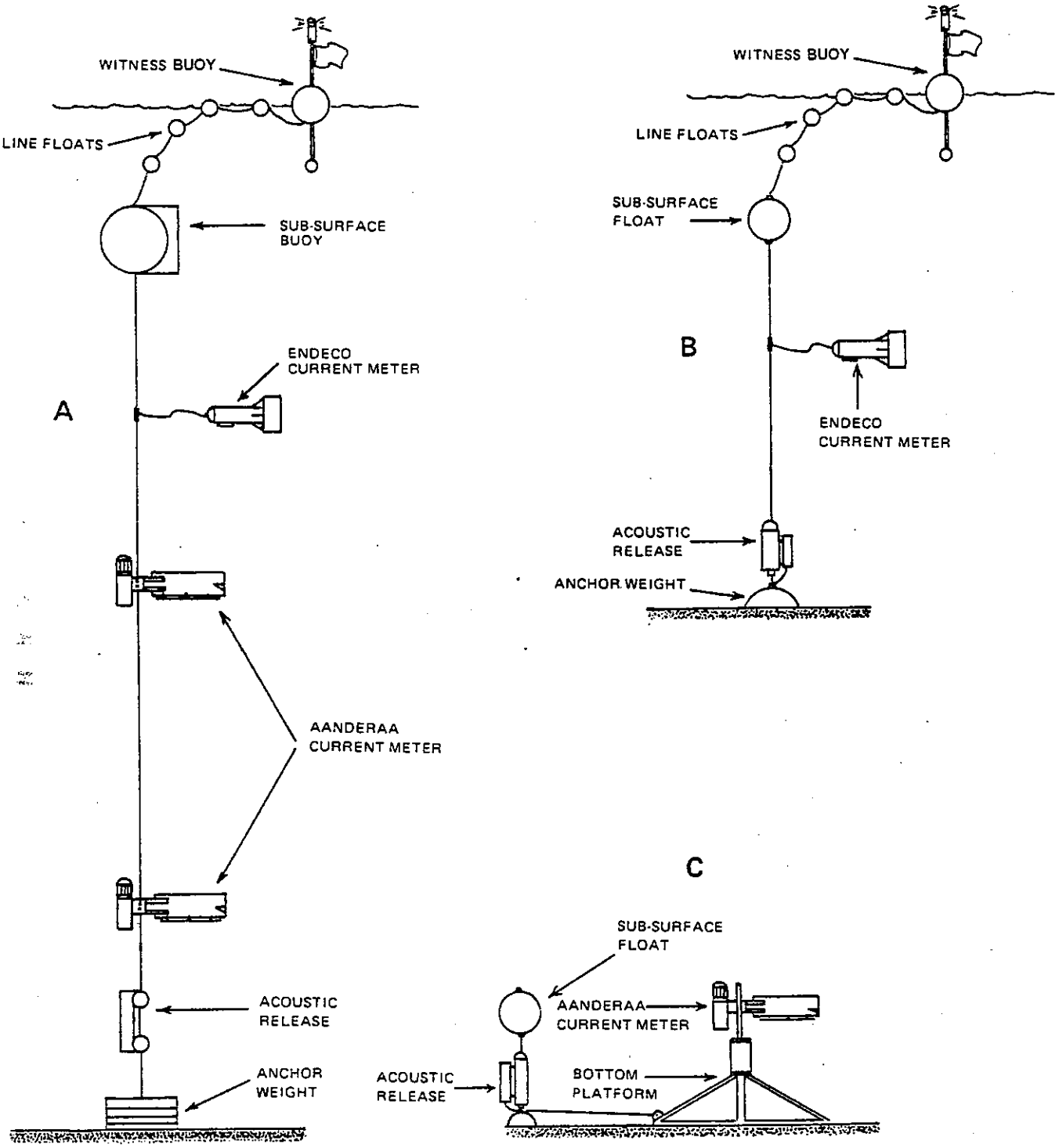

Figure 6. Current Meter Moorings

The processing scheme described in this section was used for the processing of the Aanderaa RCM4 current meter data. This system was replaced by an updated processing system called Circulatory Measurements Data Processing (CMDP) system, which will be described briefly in section 3.7.

Data measured by an Aanderaa RCM4 current meter are recorded internally on a 7.6-cm reel of 6.4-mm wide, half-mil thick magnetic tape, using a ten pin mechanical encoder. Six values are recorded as follows: reference number, temperature, conductivity, pressure, current speed, and direction. About half of the Aanderaa meters owned by NOS record hour marks (using a time counter module) on the tape using the conductivity and pressure channels. The conductivity reading is replaced every hour by a 1023 value and the pressure reading is replaced by an hour value, which increments from 0 to 1023 by ones, and then starts over. Thus, one sixth of the conductivity and pressure data are lost for the standard 10-minute sampling rate, but these hour marks are vital for time determination if a meter malfunctions. Frequently, an entire data record is saved owing to these timing marks.

The 7.6-cm instrument tape is copied by the ship onto a 12.7-cm reel of 6.4-mm wide, 1.5-mil thick tape using a Magnacord 1024 tape recorder; a reverse copy improves the data signal. The 12.7-cm tape and a strip chart plot of each parameter are sent to the Circulation Section in Rockville, Maryland. Each 12.7-cm tape generally contains approximately 15 days of data, sampled at a rate of six data points per hour. Some tapes may contain 30 days of data or more.

The following logs and documentation are sent to Rockville with the data tapes:

1. Station Log, with time and depth documentation, latitude and longitude, mooring configuration, survey information,
2. Current Meter Deployment Log, with timing and maintenance documentation,
3. Current Meter Recovery Log, with post-recovery meter check and timing documentation,
4. Station Fix Log, Station Location Chartlet, and
5. Chronological Note Log.

The times recorded on the Station Log for each current meter are vital for time-checking the data record and accurately assigning times to each data point. These include the following times:

1. first recorded data point,
2. rotor freed (untaped),
3. meter in water,
4. meter out of water,
5. rotor taped, and
6. last recorded data point.

In Rockville, the first processing step is the transcription of the data from a transmittal group of 12.7-cm tapes onto a 7-track computer-compatible tape using a transcriber based on a design from Oregon State University. This tape is sent to the UNIVAC 1100/40 computer in Suitland, Maryland, with a program called PHASE 1.

The output from PHASE 1 is a listing of all data in Aanderaa instrument units, in 6-word records (and a sync pulse). If alignment is correct, i.e., meter malfunction has not resulted in any missing or extra data words, each column on the listing will represent one parameter (e.g., the reference number). Extra or missing data words are easily detected owing to columns shifting left or right. The PHASE 1 listing is manually checked for missing or extra data words indicated by column shifts. These are corrected in the next phase of processing.

The next stage of processing incorporates a software program called PHASE 2, which reads the PHASE 1 output tape as the new input tape. With the PHASE 2 program, the data are realigned by specifying shifting corrections, that is, specifying where columns on the PHASE 1 tape should be shifted left or right to realign the columns. This is essentially the same as eliminating extra words (long records) or filling in missing words (short records). PHASE 2 also translates all data words into engineering units using accurate polynomial calibration equations based on calibration constants determined for each instrument by the Northwest Regional Calibration Center. These constants are stored on a calibration tape which is read by PHASE 2. The data, now in

engineering units, are written onto a 9-track, 1600-BPI tape in an efficient, large block format.

With the PHASE 2 listing, a careful time validation is done manually. The operation of assigning the correct time to each data record in each file is critical, and is done by two different people as a safeguard. Two time check operations are done by each person. The first check compares the number of intervals actually recorded by the meter with the number of data intervals expected. The number of expected intervals is determined by the times of first and last recorded data points and the sampling rate. The second check compares the number of data intervals expected from the first record after the meter goes into the water to the first record after the meter is out of the water again, with the actual number of intervals recorded for that time period. The point at which the meter first enters the water (or leaves the water) is clearly indicated by the sudden changes in conductivity, temperature, and pressure.

If the time check for a file of data works out exactly, i.e., there are no missing or extra data points, that file is ready for the next processing phase. If there are missing or extra data points (due to meter malfunction), their locations in the time series data record must be found, and data points added or deleted as necessary; otherwise the data record cannot be used because time assignment will be uncertain. If the Aanderaa current meter that produced the data record was equipped with a time counter module, finding the locations of missing or extra data words is an easy task. This consists of merely finding intervals where one hour mark falls less than (or more than) six intervals after the previous hour mark. For Aanderaa meters not equipped with marks, one must visually analyze a plot of the data file and hope that either an obvious malfunction occurred, or that by comparing the progression of maximum flood times to other meter plots (at different depths) at the same station, one can determine the location of the missing or extra intervals.

The next stage of processing incorporates a software program called PHASE 3. Any extra data words that must be deleted, or any missing data words that must be added, are done with this program. Periods during which the meter was recording while sitting on the ship (before and after deployment) are

eliminated from the file. Finally, the entire data file is statistically edited. This computerized editing scheme uses a Wiener-predictor algorithm and edits only those data words with erroneous values that could only have been caused by mechanical or electronic malfunction. No surrounding data words are changed (no data smoothing is done), and all edited words are flagged. The tape created by PHASE 3 (which has the same efficient data storage format as the tape created by PHASE 2) is the final data tape. At least one duplicate backup tape is made, and at the end of a survey, several PHASE 3 tapes are usually combined onto one tape for storage efficiency.

During this entire processing procedure, careful documentation records are maintained for each processing stage. This includes tape numbers, file numbers, time-checking results, data quality comments, and time series plots for each station depth. The final data are stored in compact form for future use, and are sent to the National Oceanographic Data Center.

Reduction of the ENDECO-174 current meter data was performed by the USGS on a data processing system structured around a microcomputer and an ENDECO-173 tape translator (Cheng and Gartner, 1980). The system consists of an LSI-11 microcomputer, two floppy disk drives, a 9-track tape drive, a line printer, a cathode-ray-tube (CRT) terminal, and the data tape translator. The CRT terminal performs the main input-output (I/O) control of the system and hard-copy output is produced on the line printer. System software resides on one floppy disk whereas the other is utilized for translation and storage of the binary raw data recovered from the current meter tapes via the tape translator. The translator sequentially reads one block (one hour) of four bit data, stores it in memory, combines pairs of four bit data series into bytes, and sends the block of data to the microcomputer for storage on the floppy disk.

Once the raw binary data are stored on disk, various checks are performed to examine the data quality. These include an examination of the daily conductivity reference values and 24-hour record marks, in addition to a check of data completeness by comparison of the logged meter on and off times with the number of data readings. Any missing data are added as "dummy" readings to correct the timing of the remaining series. Questionable temperature and

conductivity readings are also identified and hand-edited where necessary, and any erroneous readings due to mechanical failure are eliminated. The two-minute data are then translated and averaged, utilizing calibration data unique to each current meter. The 30-minute averages (speed and direction vector averaged) are plotted to permit a visual check for any erroneous readings not previously determined during examination of the raw data files. As a final step, the edited data files are translated into engineering units and stored on 9-track tape in the standard NODC format. The data files were provided unedited to NOAA/NOS for further analyses. All current meter data processed by the USGS are stored on computer retrievable media in 2-minute and 30-minute form.

3.0. TIDE DATA

3.1. Locations of Tide Stations and Relevant Information

Tide stations were installed to provide information for various purposes. The major uses are correlation with current, CTD, and meteorological data; computation and updating of tidal datums referred to tidal bench marks; reoccupation of historical locations to study sea level changes, variation in tidal characteristics, and updating the tidal prediction tables; and calculation of harmonic constituents.

The tide stations installed and operating during the survey are listed in table 7 and are shown on figure 7. The table includes station number and name, geographic coordinates, installation and removal dates, type of gage, number of days occupied during the survey, and the date of publication of bench mark sheets by NOS. The bench mark sheets contain the elevations of the tidal bench marks relative to tidal datums. Six of the tide stations listed were in continuous operation and are part of the National Water Level Observation Network (NWLON); a network of continuously operating stations operated by NOS in United States coastal zones including the Pacific, Atlantic, Carribean, and the Great Lakes.

During the time period of the survey, two other NOS projects were ongoing during which tide station installations and removals were coordinated. The first project was the CMBP mentioned in section 1.2., and the second was an ongoing NOS hydrographic survey, during which a hydrographic survey party installed and operated stations in portions of the survey area. These stations are indicated on table 7.

NOAA Ship McARTHUR personnel were responsible for the installation, operation, and maintenance of the circulation survey tide stations. Most of the tide stations were installed and removed to coincide with the current station schedule to maximize the amount of simultaneous vertical and horizontal data.

Table 7. Tide Stations Occupied During the San Francisco Bay Area Circulation Survey

Station Number	STATION INFORMATION			OBSERVATION INFORMATION				
	Station Name	Latitude (N) Longitude (W)	Instrument D = Digital (ADR) B = Bubbler S = Standard	Installation Date	Removal Date	Days of Data 01/79-12/80	Special Projects:* CMBP, Hydro.	Published Bench Mark Sheet
941-3450	Montery Harbor	36°36'18"	D, B	Continuous	Continuous	731		01/74
		121°53'18"		Operation	Operation			
941-4290	Fort Point, Presidio	37°48'24"	D, B, S	Continuous	Continuous	731		07/77
		122°27'54"		Operation	Operation			
941-4317	Pier 22½, San Francisco	37°47'24"	D	03/02/79	04/30/79	59		06/77
		122°23'12"	D	08/13/79	07/11/80	333	Hydro	
941-4358	Hunters Point	37°43'48"	D	01/21/79	03/27/79	31		06/78
		122°21'24"	D	03/30/79	05/01/81	641	Hydro	
941-4392	Oyster Point Marina	37°35'30"	D	04/12/79	08/31/79	140	Hydro	07/78
		122°18'48"	D	03/14/80	10/07/80	207		
			D	02/28/81	10/31/82		Hydro	
941-4458	San Mateo Bridge	37°34'48"	D, B	Continuous	Continuous	731		07/78
		122°15'12"		Operation	Operation			
941-4509	Dumbarton Bridge	37°30'24"	D	01/24/79	03/13/79	48		04/78
		122°07'06"	D	01/29/80	05/18/81	336	Hydro	
941-4575	Coyote Creek	37°27'48"	D	01/23/79	03/09/79	45		05/79
		122°01'24"						
941-4688	San Leandro Marina	37°41'42"	D	01/22/79	03/30/79	67		05/78
		122°11'30"	D	04/30/79	09/29/82	610	Hydro	
941-4750	Alameda, Oakland	37°46'18"	D, B	Continuous	Continuous	731		07/77
		122°17'54"		Operation	Operation			

* Stations were also in operation for California Marine Boundary Program (CMBP), or Hydrographic Survey Program (Hydro).

Table 7. Continued

Station Number	STATION INFORMATION			OBSERVATION INFORMATION				
	Station Name	Latitude (N) Longitude (W)	Instrument D = Digital (ADR) B = Bubbler S = Standard	Installation Date	Removal Date	Days of Data 01/79-12/80	Special Projects:* CMBP, Hydro.	Published Bench Mark Sheet
941-4811	Bradmoor Island	38°10'54"	D	11/06/78	01/08/80	373	CMBP	08/81
		121°55'24"						
941-4816	Berkeley	37°51'48"	D	02/07/79	10/31/79	266	CMBP	06/82
		122°18'42"						
941-4818	Angel Island	37°51'48"	D	01/18/79	11/14/79	269	Hydro	06/66
		122°25'12"	D	04/07/80	12/02/80	239		
941-4873	Pt. San Quentin	37°56'42"	D	09/07/79	10/29/79	52		01/80
		122°28'30"						
941-4881	Point Orient	37°57'30"	D	09/07/79	10/30/79	53		07/79
		122°25'30"						
941-4906	Point Bonita	37°49'06"	D	02/05/79	05/07/79	91		05/64
		122°31'42"	D	09/12/79	10/26/79	47		
941-5009	Point San Pedro	37°59'24"	D	03/14/79	05/05/79	52		
		122°26'48"	D	03/24/80	12/02/80	222		
941-5020	Point Reyes	37°59'30"	D, B	Continuous	Continuous	731		11/76
		122°58'30"		Operation	Operation			
941-5056	Point Pinole	38°00'54"	D	03/15/79	04/17/79	33		05/79
		122°21'48"						
941-5064	Antioch, San Joaquin	38°01'12"	D	10/29/79	12/04/79	36		01/80
		121°48'54"						
941-5111	Benecia	38°02'36"	D	09/27/76	04/03/82	731	CMBP	08/79
		122°07'48"						
941-5112	Mallard Island Ferry	38°02'36"	D	04/03/79	05/03/79	31		07/79
		121°55'06"	D	10/18/79	11/27/79	40		
			D	12/31/79	12/03/80	337		

Table 7. Continued

Station Number	STATION INFORMATION			OBSERVATION INFORMATION				
	Station Name	Latitude (N) Longitude (W)	Instrument D = Digital (ADR) B = Bubbler S = Standard	Installation Date	Removal Date	Days of Data 01/79-12/80	Special Projects:* CMBP, Hydro.	Published Bench Mark Sheet
941-5143	Crockett	38°03'30"	D	03/14/79	05/04/79	52		07/79
		122°13'24"	D	10/16/79	12/05/79	50		
			D	03/21/80	12/03/80	258	Hydro	
941-5144	Port Chicago	38°03'24"	D, B	Continuous	Continuous	731		06/79
		122°02'28"		Operation	Operation			
941-5176	Collinsville	38°04'24"	D	04/02/79	05/02/79	30		07/79
		121°50'54"	D	11/01/79	12/04/79	34		
941-5197	Simmons Island	38°05'06"	D	10/24/79	11/28/79	34		
		121°59'30"						
941-5265	Suisun Slough	38°07'18"	D	10/29/79	11/28/79	30		03/80
		122°04'24"						
941-5338	Sonoma Creek Entrance	38°09'24"	D	03/13/79	04/16/79	34		07/79
		122°24'24"	D	07/17/79	11/08/79	83		

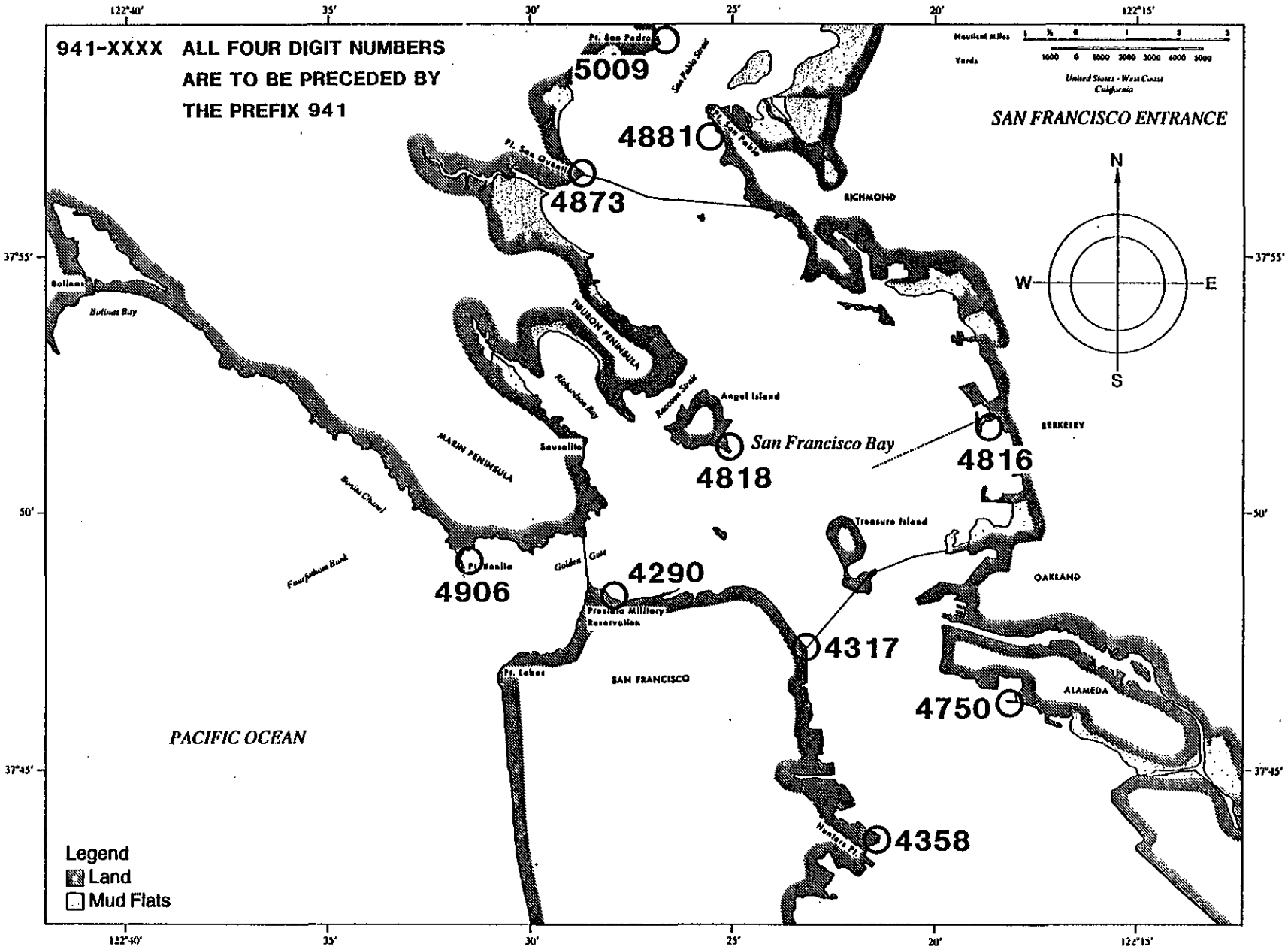

Figure 7a. Tide Station Locations

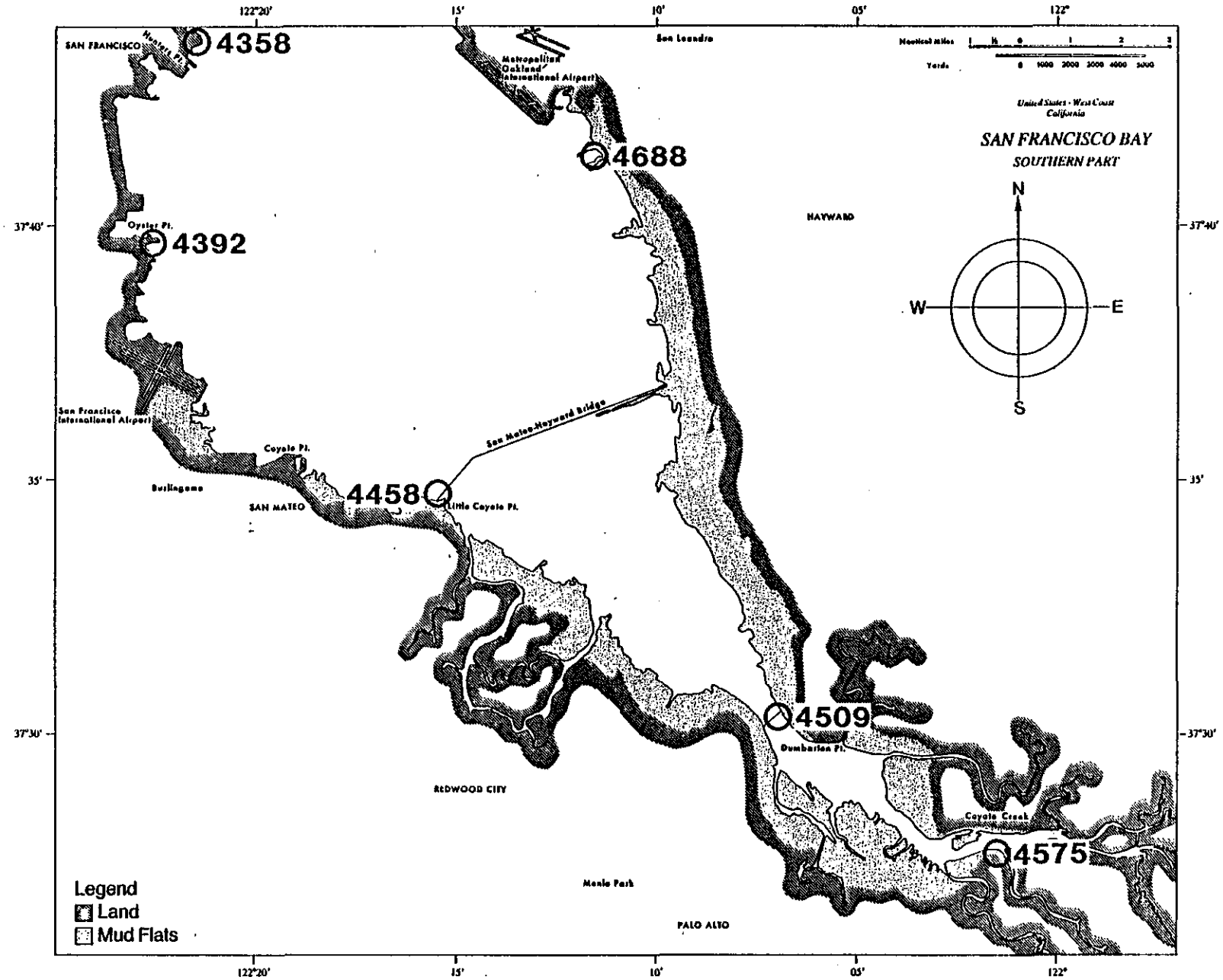

Figure 7b. Tide Station Locations

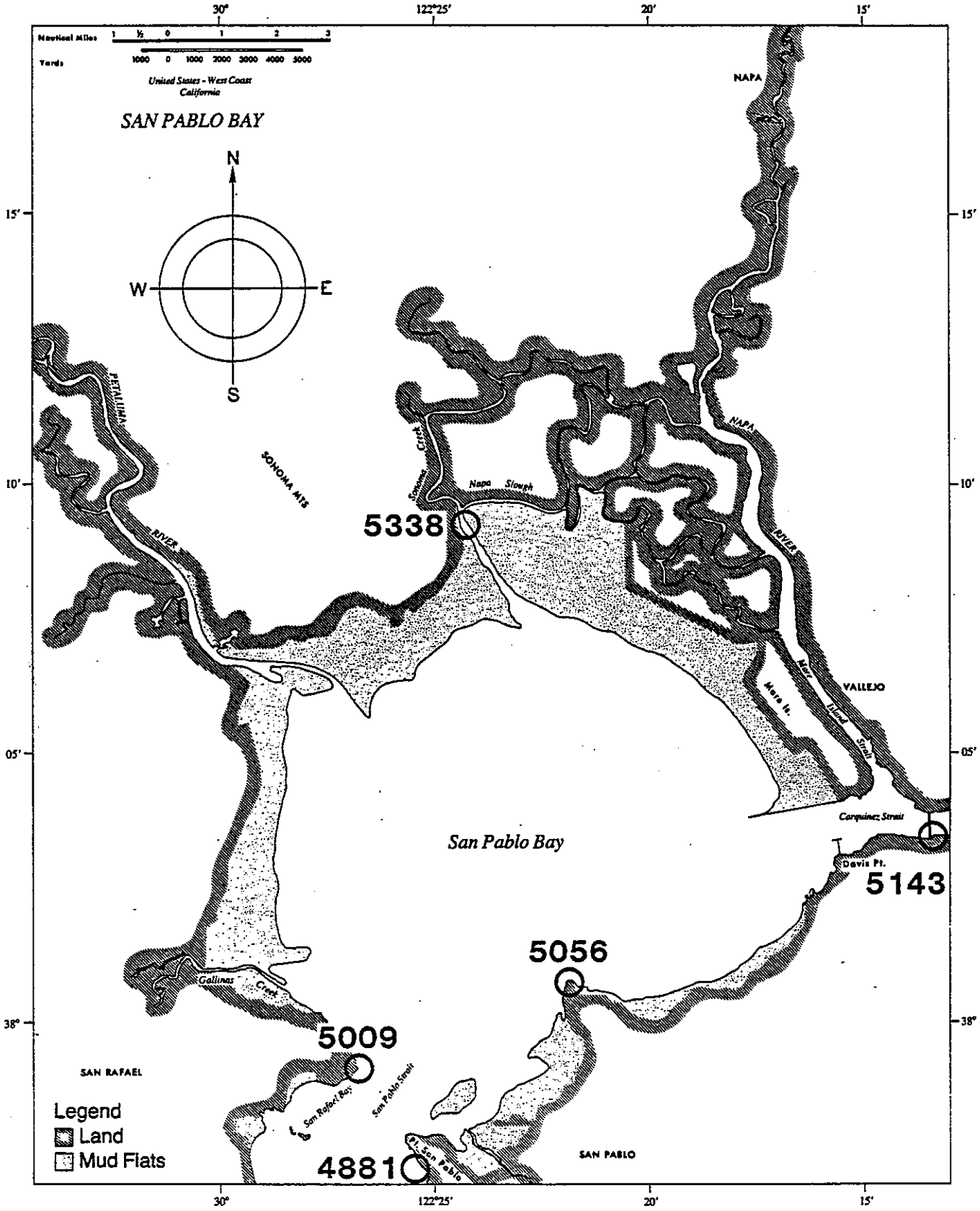

Figure 7c. Tide Station Locations

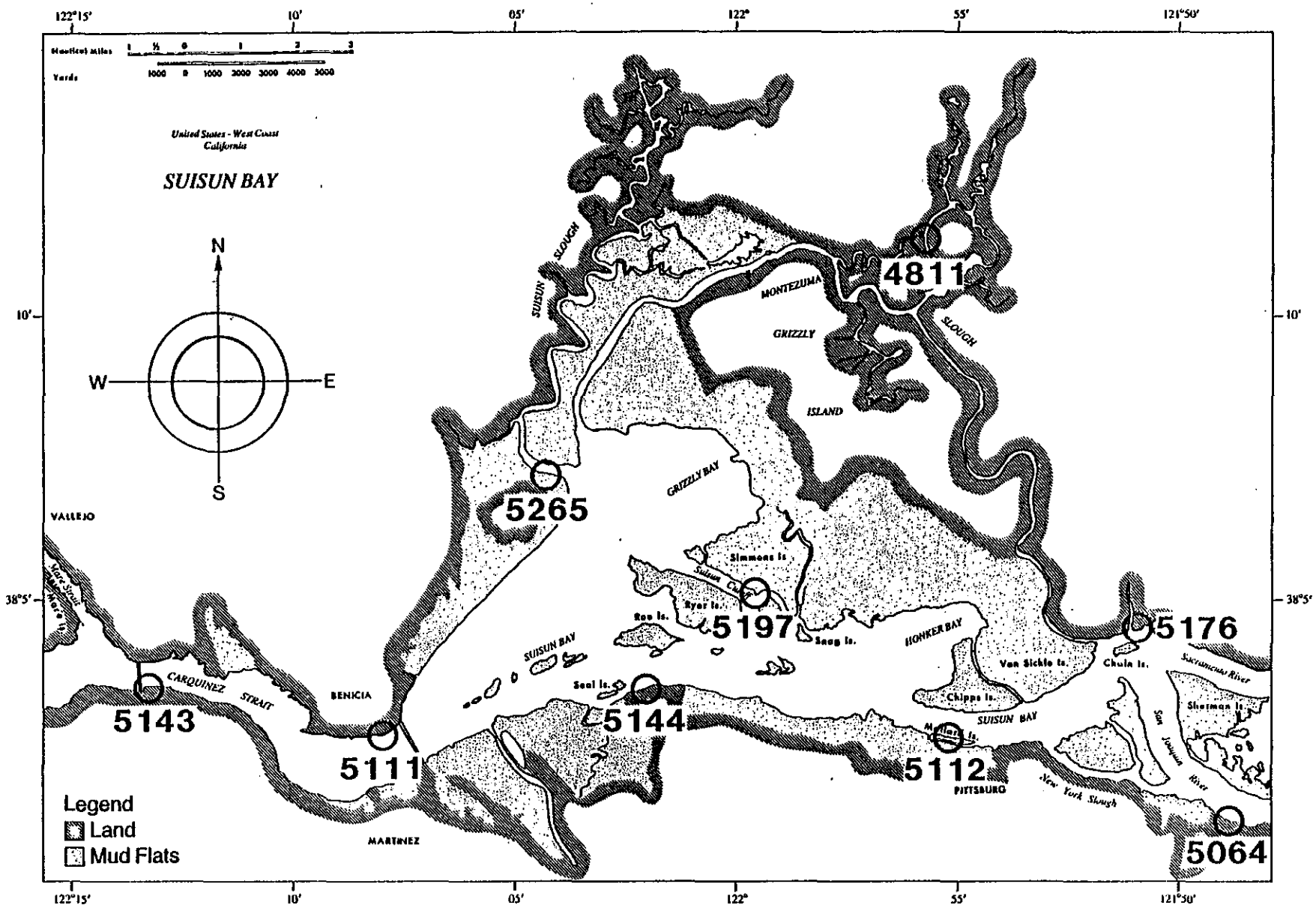

Figure 7d. Tide Station Locations

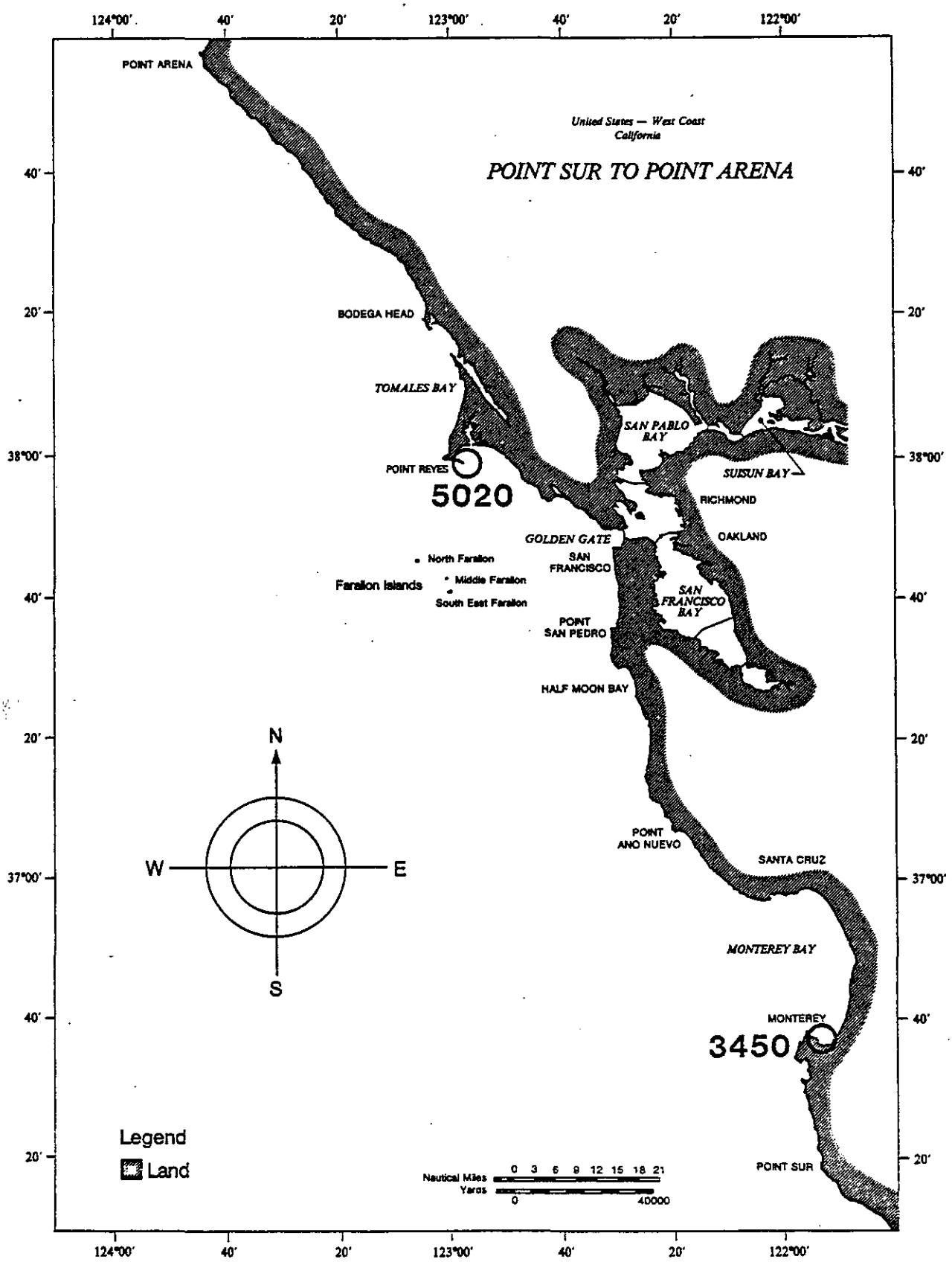

Figure 7e. Tide Station Locations

The total number of stations in operation, and the total number of station days of occupation during the time period from January 1979 to December 1980 are as follows:

	Station Type	Number of Stations	Number of Station Days
1.	NWLON	6	4,386
2.	Short-term stations installed for multiple surveys*	11	4,385
3.	Circulation Survey purposes only*	25	1,700
	Total	42	10,471

* (2) and (3) include reoccupations; tides were observed from a total of only 28 locations.

All except three of the short-term stations were historical stations occupied during the CMBP. Most of the published datums are based on occupations which occurred prior to the circulation survey. A minimum amount of reconnaissance and bench mark establishment was required for this survey because most stations were recent historical stations with established bench marks and well documented tide gage locations.

3.2. Instrumentation and Installation

All tide stations established by the McARTHUR for the survey consisted of the following components:

1. analog-to-digital (ADR) tide gage, float, and floatwire;
2. stilling well;
3. support structure(s);
4. tide staff; and
5. tidal bench mark network.

The ADR tide gages used in the program were procured from two manufacturers, Fischer & Porter and Leupold & Stevens. Both types of gages, in general, employ identical principles of operation and were thus used interchangeably

throughout the program. Each has a maximum range of 50 feet and records water level heights to hundredths of a foot, mechanically converting angular positions of a rotating shaft with a float, wire, and float reel assembly into binary coded (8, 4, 2, 1) decimal output. This information is recorded on a 16-channel foil-back data tape being punched every 6 minutes. The data sampling interval of 6 minutes is controlled by a solid-state timer. The gages are powered by a 7.5-volt battery and are protected from the elements by weatherproof security covers.

The Fischer & Porter models 1550 and 1551 are identical except for their exterior housing. A more detailed description of the Fischer & Porter ADR may be found in "Fischer & Porter - Instruction Bulletin (Number 35-1550C) for Type 1550 and 1551 Punched Tape Level Recorder (Spring Counterbalance Type) Design Level 'C'." A more detailed description of the Leupold & Stevens ADR may be found in Leupold & Stevens "Instructions: Stevens Digital Recorder Model 7031, 7032."

The stilling well is a vertical tube with a relatively small opening (orifice) in the bottom. It is used in a tide gage installation to dampen high frequency waves while freely admitting the tide to actuate a float which, in turn, operates the tide gage. It extends to a water depth well below, if possible, that of the lowest tide. A schedule 40, 4-inch diameter PVC pipe was used in most cases. Occasionally, however, stilling wells already established by other agencies, such as U.S. Geological Survey, Bureau of Land Management, U.S. Army Corps of Engineers, and California Department of Water Resources were available and were utilized by the field parties. These stilling wells varied in size and type.

The tide staff is a nonrecording tide gage consisting of a vertical graduated staff from which the height of the tide can be read directly. It is graduated in feet and tenths of a foot with the length varying, dependent upon type and manufacturer. Owing to marine fouling, the tide staff is usually made of or coated with an easily cleaned surface such as fiberglass or vitrified enamel. It is used as a reference standard for comparative observations (staff to gage differences) and is related to local bench marks by differential levels.

At each station, a network of at least five tidal bench marks was established through evaluation of historical bench marks and/or the setting of new bench marks. The standard tidal bench mark of NOS, to which the tide staff and tidal datums are referred, is a brass disk 3-5/8 inches in diameter, either set into a permanent structure such as a bridge abutment or bedrock, or set on a deep-driven rod.

The gas-purged pressure gage, commonly known as a "bubbler," is an analog-type gage which was occasionally used as a backup gage at the NWLON stations. It is a portable pressure-recording instrument that produces a continuous strip chart record of water level changes. The underwater part of the gage consists of a small orifice chamber attached to a gas supply tube. The shore end of the tubing is connected to the gas system (pressure regulation mechanism and nitrogen gas storage tank) and to the transducer (temperature-compensated pressure bellows) and a strip chart recorder. The Metercraft Model 7601 was typically used. Additional information on this tide gage is contained in Metercraft's "Instruction: Dry Purged Pressure Recording Tide Gauge by Metercraft."

The first step in establishing a tide station was a thorough reconnaissance of the prospective site. A reconnaissance involved traveling to the site and performing the following tasks:

1. Evaluation of all historical tidal bench marks (if any) and any other bench marks which were set in the area by other agencies. Any National Geodetic Vertical Control Network (NGVCN) bench marks within a 1-mile radius of the site also were recovered. If additional bench marks were needed, prospective sites were designated.

2. Locating a suitable support structure with sufficient water depth and accessibility. If no support structure was available, the selection of a suitable site for the construction of a support structure was necessary. In both cases a detailed list of materials and equipment needed to install the tide station was compiled.

3. Obtaining permission from the property owner for installation of the tide station.

4. Locating a potential tide observer.

The next step was the actual establishment of the tide station. A typical installation consisted of the stilling well being attached by various types of brackets and/or stainless steel bands to a pile. Piles were utilized from piers (figure 8), fenders, channel markers, bridges, railroad trestles, or were sometimes freestanding. If a pile or a previously established stilling well (from another agency), or some other suitable structure, was not available, a support structure had to be constructed. The support structures constructed were either freestanding piles jetted into the bottom with bracing batters or a three- or four-corner platform.

The tide staff was fastened to a support backing, usually a 2- by 6-foot treated plank, and was preferably attached to a different pile than the stilling well in order to isolate any settlement problems. The tide staff was placed so that it covered the full range of tide, was easily visible to the tide observer, and accessible for cleaning and surveying.

Most of the tide stations were installed at lower low waters to allow the stilling wells and staffs to be secured to the support structures as far down as possible. In some cases, this was not feasible and scuba diving was required to make the proper installation.

Bench marks at each tide station were established in accordance with the "User's Guide for the Establishment of Tidal Bench Marks and Leveling Requirements for Tide Stations (User's Guide)." A network of at least five tidal bench marks was established at each tide station by recovery and/or the setting of new bench marks. The types of bench marks set, at least 200 feet apart, were bedrock, deep rod, and monument (large man-made structures). They were standard NOS brass survey disks stamped with the last four digits of the respective tide station number, a designating letter, and the year.

All differential leveling among the tide staff, tidal bench marks, and the NGVCN bench marks was performed to the data quality standards (frequency,

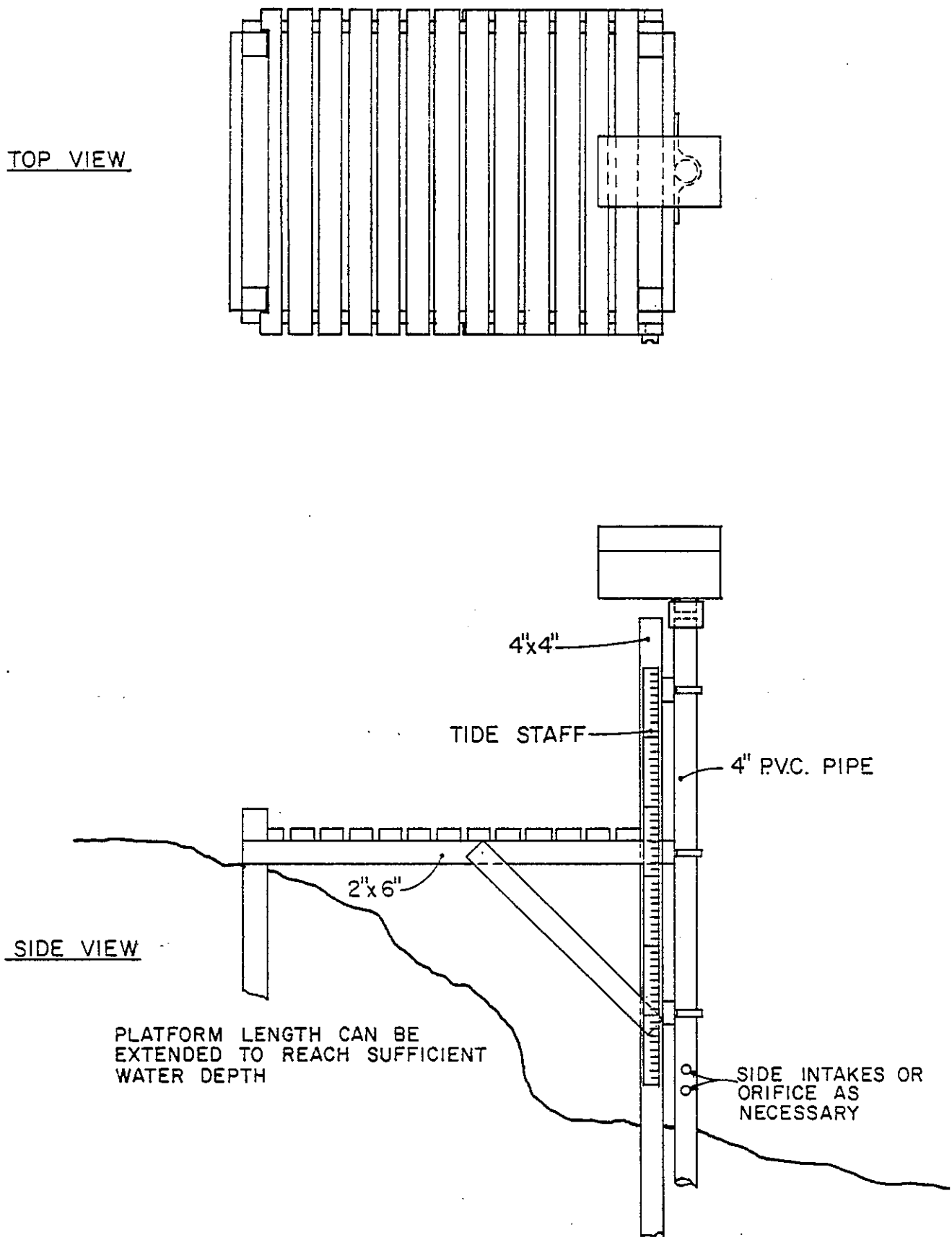

Figure 8. Typical Tide Station Installation

accuracy, collimation tests, observing routine, closing error) in accordance with the following:

"User's Guide for the Establishment of Tidal Bench Marks and Leveling Requirements for Tide Stations," by Lt. Cdr. A. Nicholas Bodnar, Jr., NOAA Tidal Requirements and Acquisition Branch, NOS, December 8, 1977;

"Classification Standards of Accuracy, and General Specification of Geodetic Control Surveys," prepared by Federal Geodetic Control Committee, NOS, February 1974, reprint May 1978; and

"Specifications to Support Classification, Standards of Accuracy, and General Specifications of Geodetic Control Surveys," by Federal Geodetic Control Committee, John O. Phillips, Chairman, NOS, July 1975, reprint May 1978.

Differential levels to all five bench marks were run at each tide station upon installation. The instrumentation available were Zeiss Ni_2 automatic levels. At NWLON and stations installed for the CMBP, Second order, Class I differential levels were run using the 3-meter Zeiss precise rod L12 with an invar scale and half-centimeter graduations. At all other stations, third order differential levels were run using the Metagrad Philadelphia rods graduated in centimeters.

The hiring and training of the tide observer was one of the most important aspects of the tide station installation. A competent, well-trained tide observer makes a significant difference in the quality of the tidal data produced by a tide station. In many instances, ship personnel served as tide station observers. Tide station documentation forms; photographs; a large-scale map section indicating the station location, a sketch of the bench marks, tide gage, and staff locations; and a description of how to reach the tide station from a major landmark, were forwarded to Rockville, Maryland, as a tide station package.

Specialized equipment was used to install bench marks (figure 9a). For bedrock and monument marks (figure 9b), a gasoline-powered rock drill/hammer

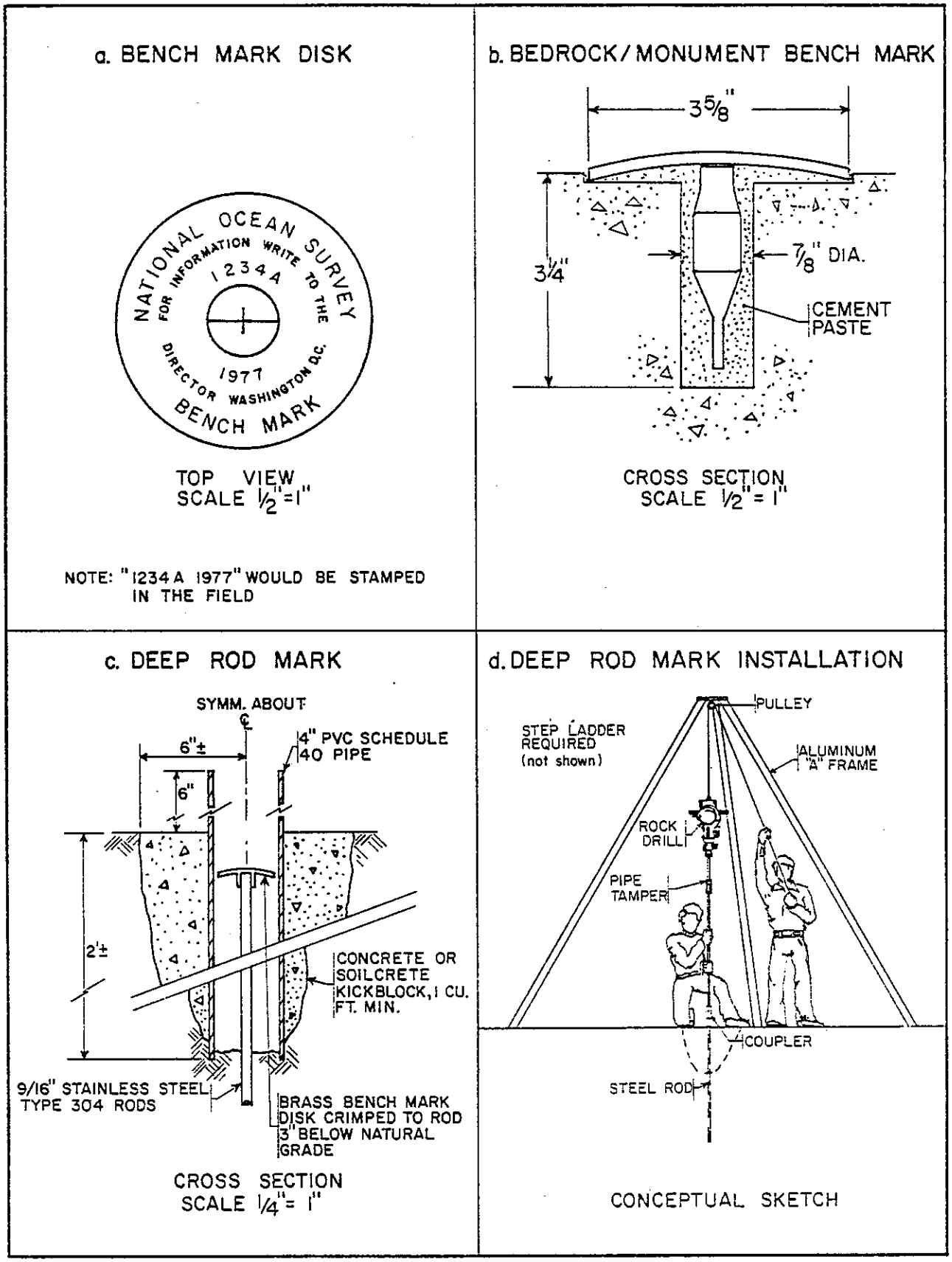

ILLUSTRATION OF TYPICAL BENCH MARK, BEDROCK/MONUMENT BENCH MARK, DEEP ROD MARK AND INSTALLATION OF A DEEP ROD MARK

Figure 9. Illustration of Typical Bench Mark Installations

was used to drill the holes needed to mortar-in the bench marks (figure 9c). To install deep rod bench marks, different equipment and procedures were employed.

After a site was selected, and permission obtained, the local utility companies were contacted (if deemed necessary) to determine if any cables or pipes were located in the area. This was accomplished during reconnaissance. Installation was begun by digging a hole approximately 1-½ feet deep by 1 foot in diameter. A section of 5/8-inch diameter, 8-foot long galvanized steel rod (NOS is now using 9/16-inch diameter type 304 stainless steel rods in 4-foot sections) was held vertically in the center of the hole and pushed in as far as possible by hand. A gasoline-powered rock drill with a pipe tamper attachment elevated by a portable aluminum "A" frame (or by standing up on the side of a truck's utility body) was used to drive the rod down (figure 9d). Rods were connected to each other by couplers sealed with pipe joint compound. When the rod had been driven to refusal or 50 feet, the excess was cut off and the bench mark disk crimped on below grade, using a hydraulic hand pump. A short section of 4-inch PVC pipe was placed around the bench mark and a cement kickblock was poured around the pipe. A witness post was also installed if circumstances warranted it.

3.3. Operation and Maintenance

Once a tide station was installed, it was incorporated into a regular cycle of monitoring and maintenance. Monitoring was accomplished in two steps. First was a monthly roll scan by field personnel performed during the first part of each month after all the tide rolls had been collected. Upon receipt, the rolls were scanned for data defects such as mechanical, time, and/or observer problems. The problems were noted for corrective action as a processing aid for data quality assurance and data tabulation. All but the most subtle problems were identified and remedied in a timely fashion by this first step.

The second step was performed by the Tidal Analysis Section in Rockville. If additional problems were identified during the processing of a roll, the ship was notified by telephone and a follow-up preliminary evaluation form.

Emergency repairs were performed on a tide station if either of the previous steps revealed a problem. In addition, the ship was notified of problems by telephone by the tide observer responsible for the tide station.

At tide stations of sufficient duration, semiannual inspections were performed. These involve leveling to three bench marks, a visual inspection of the tide gage and the past week of punched data, contact with the tide observer, and if the ADR gage was a Leupold & Stevens, a torque test to measure the bearing friction. Torque tests were performed more frequently at tide stations susceptible to bearing deterioration, such as tide stations in areas of low tidal range and/or high salinity.

Annual inspections were performed at tide stations of sufficient duration. The annual inspection was identical to the semiannual inspection except that all five bench marks were leveled and their descriptions verified. The removal of a tide station involved leveling to all five bench marks, removal of all equipment except the bench marks, and restoration of the site to its original condition, unless requested otherwise by the property owner.

3.4. Data Processing

The first step in processing is the Comparative Reading, at which time data quality checks are made and a data "setting" is computed. The staff-to-gage differences are determined by taking the staff readings as recorded by the observer at the gage and subtracting the actual values recorded on the record at the indicated time. These differences are arithmetically meaned and the average staff-to-gage differences are added to a level constant to provide corrections and continuity with previous records at that station. This will reflect any changes for tidal datums. A setting for the record is then computed. If there are problems with the gage, or it has been readjusted, or the staff has been disturbed, a change in the staff-to-gage differences may require a record to be processed on different settings for different time periods. If the gage time differs from the observer's watch time, it is noted so that the time adjustments can be made. Any obviously erroneous staff readings are rejected and not included in the computation of the mean.

Problems of erroneous times, heights, or malfunctions in the record are noted on the Comparative Reading to aid in correcting the record while it is being processed. An error code is derived from these troubleshooting notes to highlight the major problems for future failure analysis. To supplement trouble shooting and to provide "feedback" to the field parties for the repair of malfunctioning gages (section 3.3.), an evaluation sheet (Preliminary Evaluation) is prepared for each record. The evaluation sheet summarizes the condition of the gage and is used to tell the tide observer and/or field party the problems which need to be corrected. The main objective is to identify problems quickly so they can be corrected to keep inefficient data to a minimum. After the Comparative Reading is completed, the setting computed, and Preliminary Evaluation filled out, the record management and error analysis information are entered into a computer data base. The 6-minute data are transferred onto a magnetic tape by a digital-to-magnetic tape translator which optically reads the punched paper tape. The magnetic tape containing the 6-minute values is read into the Sea and Lake Levels processing computer system. The system is then interrogated through an interactive terminal which has a visual display (CRT) and graphics capability. The record identification number is entered and diagnostics are printed. If there are no problems with the data, the tabulated data are printed, having the setting applied to the raw 6-minute values from the record. The tabulation and reduction to means are done automatically by the computer. Tabulations are verified and the data are ready for tidal datum computations.

When problems are encountered on a record, they have to be corrected. Data may contain time problems or invalid punches because of observer problems or gage malfunctions. Troubleshooting records with poor data occurs either at the translation or the edit stage. The time may be corrected by translating it a few punches ahead (fast) or a few punches behind (slow). Each punch accounts for 6 minutes, and times are corrected in 6-minute increments (tenths of hours). Where there are skips or missing punches that do not include a high or low water, linearly interpolated values are entered into the keyboard on the translator. When the results of the processing are checked, the ending time of a unit (string) of data is examined to see if the printed time matches the correct time at the end. The printout of 6-minute values is used as a diagnostic tool to find when and where the time problem occurred.

To check for height discontinuities, the third difference test on the edit routine flags punches which may be erroneous or where especially splashy (high wave action) data occur. A plot may be made on the CRT screen or on a printer to examine suspect data. Where outlier (extreme) points appear to be part of the real tidal phenomenon, they are not altered. If the gage appears to be malfunctioning by a faulty punch, the heights may be corrected by including a "fix" parameter when submitting a job to the computer at the diagnostic scan stage. The system allows for breaks in the data to be automatically filled by computer under the control of the analyst. Tabulations from a comparison station must already be included in the system, with valid data during the break period for comparison purposes. All interpolated and extrapolated values are bracketed to distinguish them from the original data. After records are processed, they are verified and the mean values for each month of record are checked against those done previously. If they compare favorably with past results, the data then enters the datum computation phase of the program.

3.5. Tidal Datums and Data Products

Tidal datums are computed for each station after tabulation and verification of the tide data, and after verification of the geodetic levels. Datums are computed using procedures detailed in the NOS Special Publication No. 135, Tidal Datum Planes, by H. A. Marmer.

Tidal datums are vertical datums defined in terms of observed tidal phenomenon over a specific 19-year cycle called a National Tidal Datum Epoch. The present epoch in use is 1960 - 1978. The computation procedures use a method of simultaneous comparison in which stations with shorter series (less than 19 years) are compared with nearby primary control stations, to derive equivalent 19-year datums. The primary control stations for the San Francisco Bay Area Circulation Survey were Presidio (941-4290) and Alameda (941-4750). These two stations have datums determined from observations over the 1960 - 1978 epoch.

Typical tidal datums computed for the San Francisco Bay area are mean higher high water, mean high water, mean tide level, mean low water, mean

lower low water, and mean sea level. If a valid geodetic level connection from the tidal bench marks to the geodetic bench mark network has been made, the tidal datums are referenced to the National Geodetic Vertical Datum (NGVD). This type of information is provided on a published bench mark sheet for each station. These bench mark sheets also contain information on how to reach the stations and individual bench mark descriptions.

The following data products are available from each of the tide stations: 6-minute height tabulations (ADR gages only), hourly height tabulations, time and height of high and low water tabulations, published bench mark sheets, harmonic constants and reductions from 29-day Fourier harmonic analyses, and tidal predictions. In addition to the products listed above, the following products are also available from the NWLON stations: harmonic constants and reductions from 365-day least squares harmonic analyses, monthly mean summaries of data for history of station, and sea level curves and trends.

3.6. Deep-Sea Tide Data

The deep-sea tide data are used for boundary condition information for global tide, continental shelf, and hydrodynamic-numerical models. The data provide insight into how the ocean tide is modified by such conditions as shelf and frictional effects prior to entering San Francisco Bay. The data will provide for construction of offshore cotidal charts for offshore tidal zoning for future hydrographic surveys through interpolation with, as opposed to extrapolation from, onshore data.

Two deep-sea tide gage (DSTG) systems were deployed from the NOAA Ship McARTHUR on April 8, 1980, at the locations shown on figure 10. During deployment, the components shown in figure 11 were first attached to a surface float by a length of nylon line and an acoustic release to test for leaks and tilting. Following the tests, the systems were released to descend to the ocean floor. During retrieval, the releases connecting the gage to the tripod base were fired (activated); the gage and flotation unit ascended to the surface; and a flashing light and radio beacon transmitter were activated to aid in recovery.

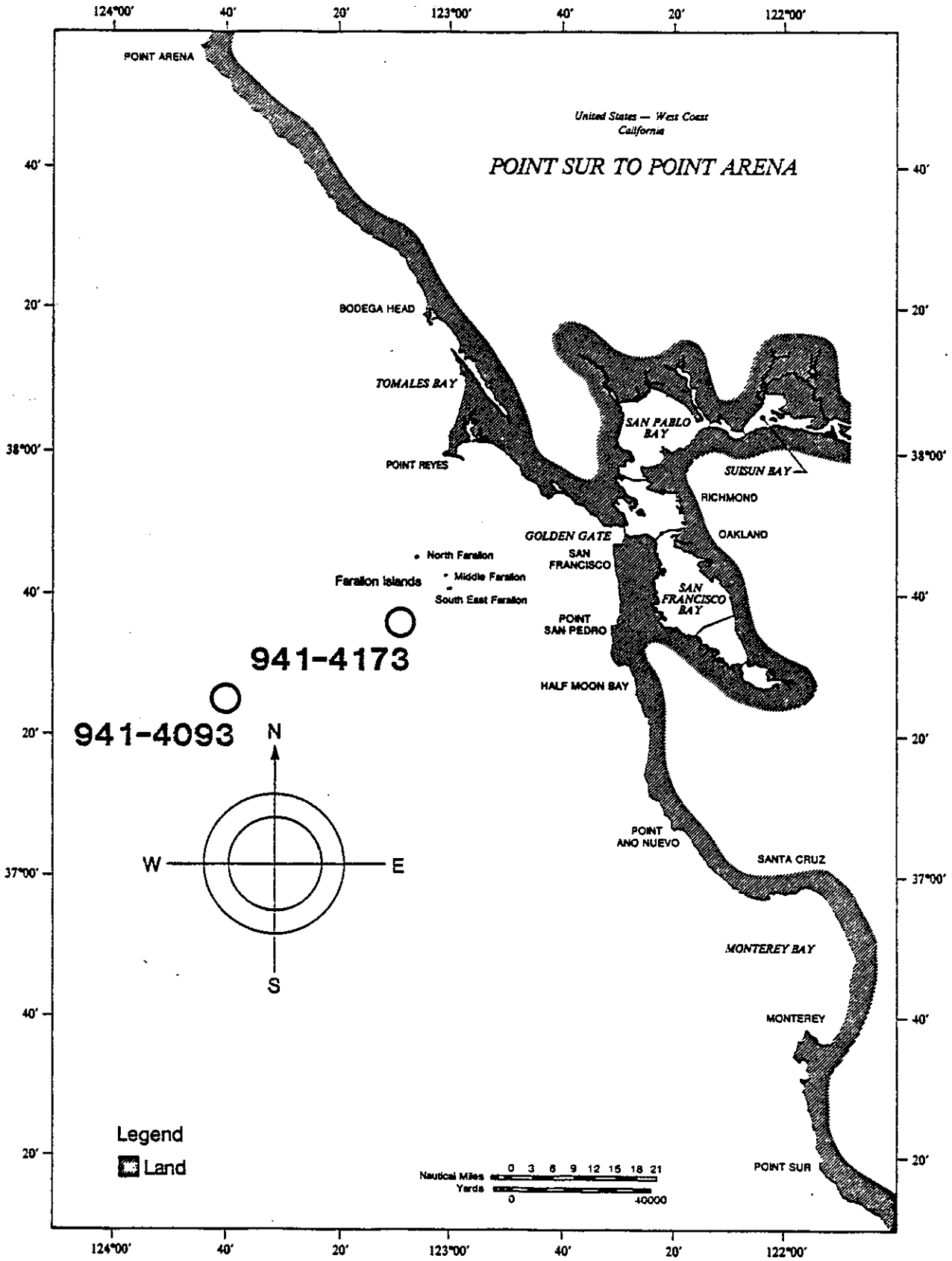

Figure 10. Deep-Sea Tide Gage Locations

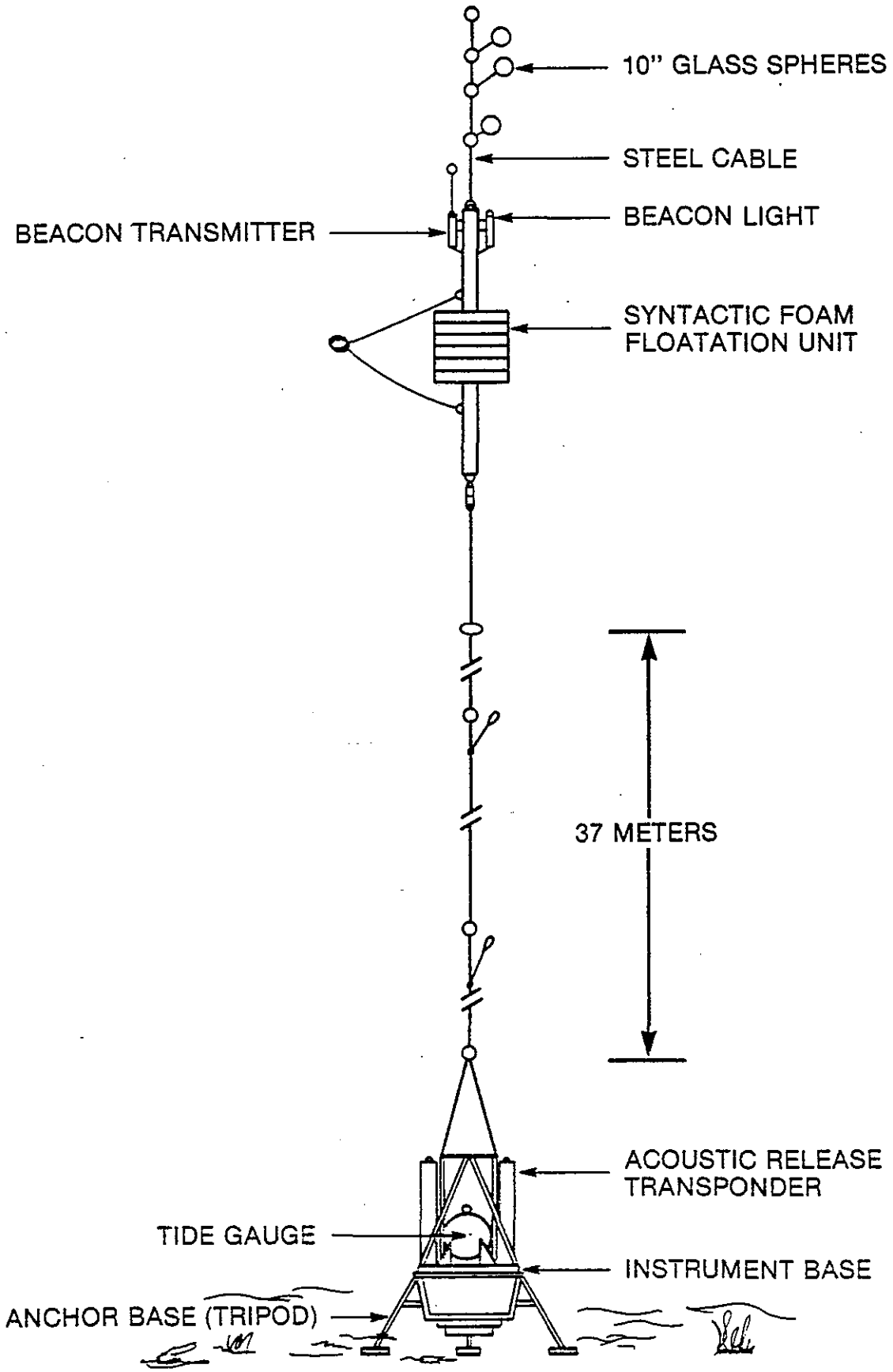

Figure 11. Deep-Sea Tide Gage Mooring

Both DSTG deployments went smoothly with both systems operational when released for descent. Only one of the two systems was retrieved in August 1980 during the recovery operation. Multiple attempts to interrogate and fire the acoustic releases on the second unit were made, and following an exhaustive search effort, retrieval operations were terminated. The cause of system failure is unknown.

Excellent data were obtained from the deep water location, 941-4093, figure 10. The data were reduced, and hourly heights were tabulated for the time period, April 8 to August 6, 1980. Harmonic analyses (29-day) were performed and harmonic constants are available for May, June, and July, 1980.

The NOAA deep-sea tide gages used in these two deployments were manufactured by Gulf General Atomic Corporation and designed by Jean H. Filloux (1970). The sensor is a temperature independent Bourdon tube pressure transducer with a frictionless optical readout. The relative pressure was recorded at half-hourly intervals on a Rustrak strip chart recorder. An Accutron timer controls the reference timing marks and the sampling rate. Figure 11 is a schematic of the mooring configuration as the system appeared on the ocean floor. The housing of the gage is a 66-cm diameter aluminum sphere mounted on an aluminum instrument base. The two AMF acoustic releases flanking the gage are connected by a chain arrangement such that if either release is fired, the instrument base and gage would be freed from the tripod base. A syntactic foam buoy attached to the instrument base by 40 meters of cable provides floatation. The gage systems are equipped with leak and tilt detectors which are tested through appropriate interrogations of the acoustic release transponders.

The intense abyssal pressure encountered at operating depths causes creep of the Bourdon tube. Previous observations (Pearson, 1975) show that the creep, which results in an apparent monotonic increase in sea level pressure, can be approximated by a logarithmic curve. The rate of creep is generally less than 1 meter in the first month of deployment and decreases with time. A data reduction computer program is used to apply calibration constants and scale shifts to the raw data, and then to correct for creep by a least-squares

fitting of the data to a creep curve. This curve is then subtracted from the data. The corrected data were tabulated at hourly intervals to form the time series analyzed for this survey.

3.7. Water-Level Records

The Anderaa water-level recorders, Model WLR-5, were mounted with special brackets on bottom platforms (section 2.2.). These instruments, whose specifications are shown in table 8, employ a quartz crystal pressure sensor capable of resolving variations in water level at depths of several hundred meters. The instruments average the pressure over an integration time to eliminate effects due to waves. At the end of the integration time, the recording of data starts first with a fixed 10-bit reference reading, followed by a 10-bit block number, and then the pressure, which is recorded as two 10-bit words.

The WLR records were be processed with the new Circulation Measurements Data Processing (CMDP) system. For a detailed documentation of the system, see "Certification of the Circulatory Measurements Data Processing System" (Patchen, et al., 1982). The system can display raw data, plot it graphically, convert it to engineering units, and perform automated time checking. Instrument malfunction statistics are also collected and made available in graphic form to the shipboard electronics personnel for more rapid diagnosis of those instruments in need of maintenance or repair. The system can process data from Aanderaa current meters, meteorological stations, water level recorders, Grundy current meters, and Applied Microsystems, Ltd. (AML) CTD units. CMDP output tapes are converted to a form compatible with the NOS UNIVAC mainframe which integrates the CMDP tapes into the NOS in-house processing and analysis system.

Table 8. Manufacturer's Specifications for Aanderaa WLR-5 Water Level Recorder

Measuring System
A digital system consisting of four channels measured in sequence. A ten-bit binary word is used for each channel. Measuring Speed: 4 seconds each channel. The channels are:

1. Reference
This is a fixed reading obtained from hardwiring a shift register inside the electronic board. It acts as a control on the performance of the unit and also as an identification of individual instruments and recorded tape.

2. Block Number
This number shows the number of successive blocks of data. Each block consists of 120 words (i.e., 30 samples). The first block is given the number one. The counter is reset when the power to the Water Level Recorder is switched off.

3. and 4. Pressure
These sensors are based on pressure controlled quartz crystal oscillators in the range 36 - 40KHz. Ranges: 0-400 psia (standard) and 0-900 psia. Accuracy: 0.01% of full scale range. Resolution: 0.001% of full scale range. Integration Times: 7 and 55 seconds, 7.5, and 29 minutes approximately. 55 seconds standard.

Sampling Intervals:
0.5, 1, 2, 5, 10, 15, 20, 60, and 180 minutes selected by interval selection switch. Derived from the time base quartz crystal oscillator.
Accuracy: 0.5 sec./day within 0 to 25°C.
External Triggering: Possible by applying a six volts pulse to terminal on top end plate. This is for calibration purposes and real-time monitoring.

Recording System
Internal:
Type: Reel to reel 6.4 mm magnetic tape.
Coding: 10-bit binary words (short and long pulses) in serial form.
Storage Capacity: 15,000 samplings using 183 m of magnetic tape on 7.62 cm reel.

Telemetry
Acoustically:
By switching on and off carrier from acoustic transducer.
Frequency: 16,384KHz ± 5 Hz.
Detection Range: Typically 800 meters with Hydrophone Receiver 2247.
By Cable:
5 volts negative short and long pulses from terminal on top end plate. May be used for real-time readings and for calibration purposes by use of Printer 2152.

Power
Battery 2291: 9 volts 5Ah., alkaline type (6 Mallory MN 1400).
size: 63 x 50 x 80 mm.
Capacity: Sufficient for one full tape or 1 year or recordings.

External Materials
Aluminum 6061/T6 alloy. To minimize corrosion, all external parts are covered with epoxy coating.

Depth Capcity
Limited by sensor range.

Weight
In Air: 5.9 kilograms
In Water: 1.4 kilograms

Dimensions
Overall height: 432 mm.
Diameter: 128 mm.

4.0. SALINITY AND TEMPERATURE DATA ACQUIRED BY NOAA/NOS

4.1. Locations of Salinity and Temperature Stations and Relevant information

Conductivity and temperature data at specified depths (CTD) are important in understanding the effect of density structure on circulation, especially on nontidal circulation. Salinity is computed from conductivity and temperature during the processing of the CTD data, resulting in STD data. A comprehensive STD program defines temporal and spatial variations in the density field. Variations over large spatial scales, both transverse and longitudinal, temporal variations over complete tidal cycles, and seasonal variations are derived from the STD data.

The three types of NOS STD stations are as follows:

(1) Time-Series Stations (TS), where observations are obtained at fixed locations, taking a surface-to-bottom cast at approximately half-hour intervals over a 25-hour period. These observations describe the variability of the density field versus depth over a tidal cycle. The results are also used in the evaluation of the synopticity of the transect (ST) type stations. The TS station locations were chosen to provide comprehensive spatial coverage, as well as seasonal variations, when operationally feasible.

(2) Transect Stations (ST), where STD casts are made along either a transverse or longitudinal line at slack-before-flood and at slack-before-ebb. This information indicates the density structure at one "synoptic" stage for a specified cross section. As with the TS station locations, the ST stations were chosen, and the transects run, to provide comprehensive spatial and seasonal coverage.

(3) Single Stations (S), where casts are obtained at various current station locations throughout the region to complete the spatial picture and to investigate whether local anomalies might exist in the density regime.

As discussed earlier in section 1.0., the NOS STD effort was greatly enhanced by the USGS water sampling program (section 5.0.). Following the

spring 1979 field season, the NOS STD program was generally limited to TS stations and deep water transects.

Figure 12 displays the NOS STD transects and time-series stations, and tables 9, 10, and 11 provide the following NOS STD information: station number and coordinates, date and time of cast, water depth, type of cast, the depth at which the deepest record was acquired for each cast, instrument type, and present data products. For those stations which were part of a transect (ST), the transect number (figure 12) and run number are listed under type of cast. Some of the transects were run as many as six times during a particular field season. All cast times are recorded in Universal Coordinated Time (UTC).

4.2. Instrumentation and Processing

The NOS STD data acquired during this survey were from three different sources. The first source was the Aanderaa and ENDECO current meters themselves. Both current meters have temperature sensors, and all ENDECO and most Aanderaa meters have conductivity sensors from which salinity can be calculated. The data from these meters provide long-term time series at from one-to-four points along the vertical water column, depending on the station. Table 3 provides the total number of good days of conductivity and temperature data for each current station deployment, and tables 4 and 5 provide the sensor specifications for the Aanderaa and ENDECO measurement systems. Section 2.0. provides the processing and calibration procedures for the two systems.

The second source of STD data was the Martek, Model TDC, in-situ metering system. This system was used in shallow water areas where the NOAA Ship McARTHUR could not safely enter. The Martek instrument specifications are given in table 12. A Martek record consists of a depth, temperature, and conductivity reading taken at either 1.5 or 0.75-meter increments. Each record was hand digitized onto an in situ data sheet.

The third source was a Plessey Model 9041 CTD system; this was the primary source of CTD data. Specifications for the Plessey 9041 are given in table 13. The CTD sensors were lowered at about 30 meters per minute to

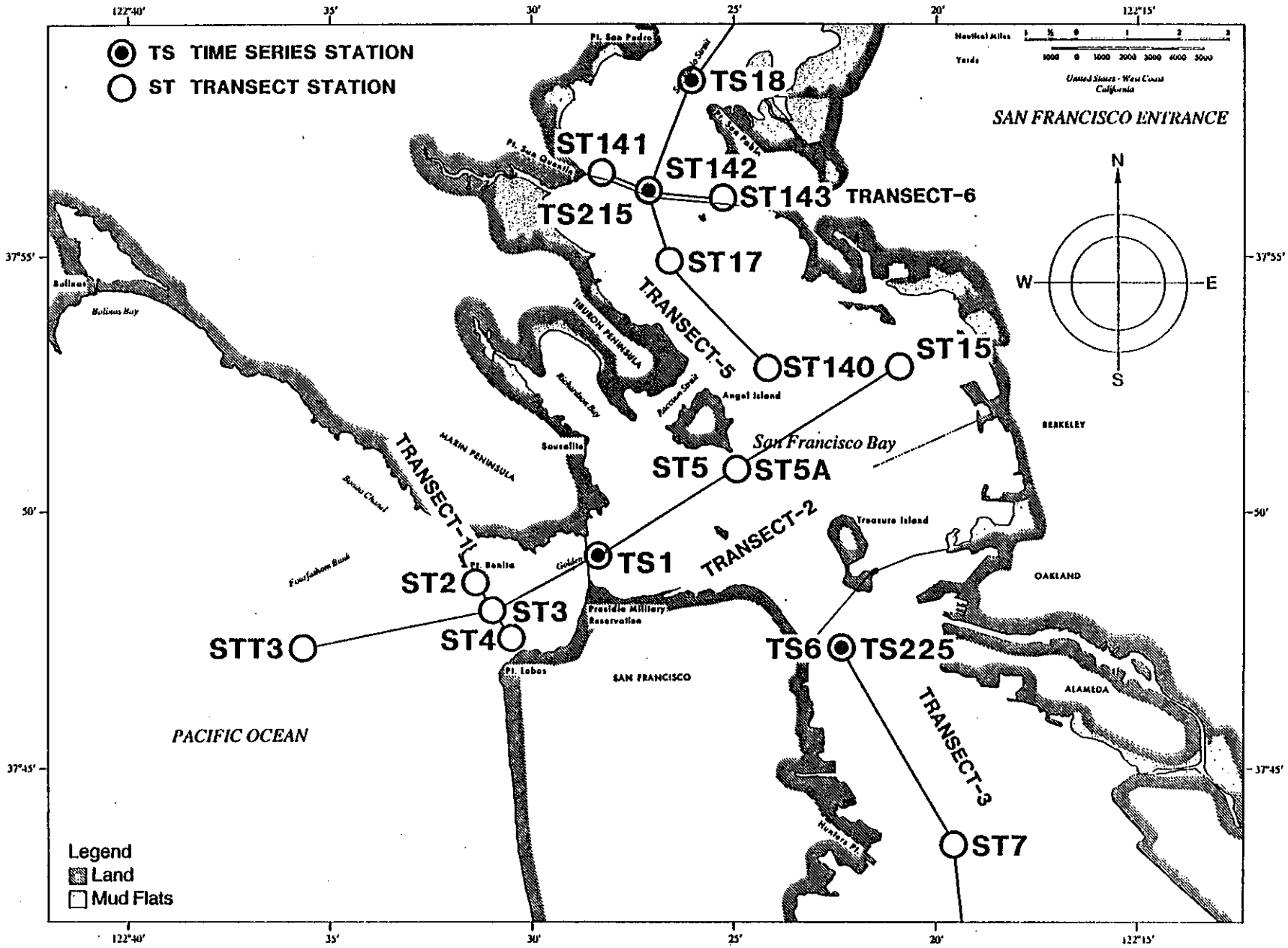

Figure 12a. NOS CTD Transects and Time Series Stations

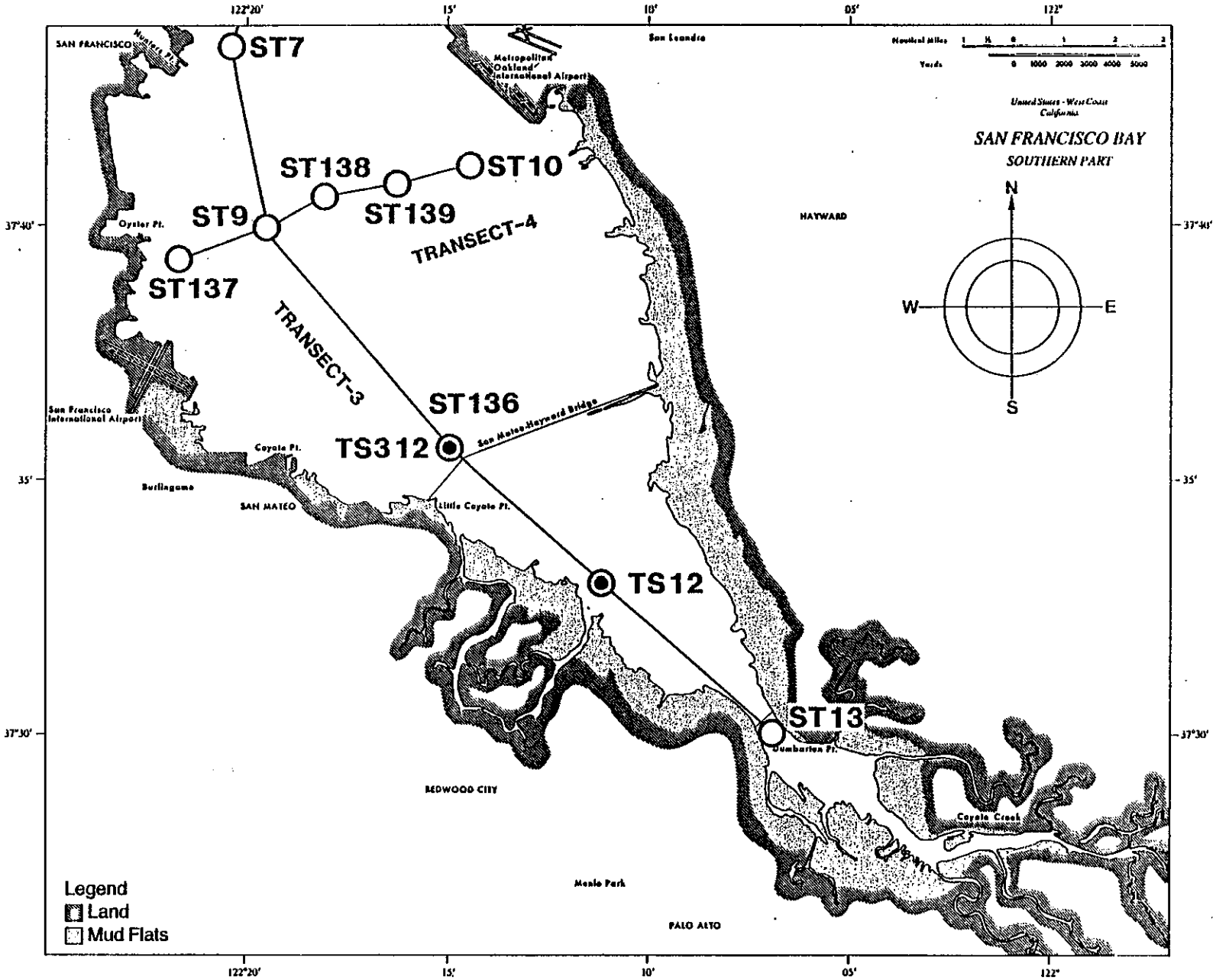

Figure 12b. NOS CTD Transects and Time Series Stations

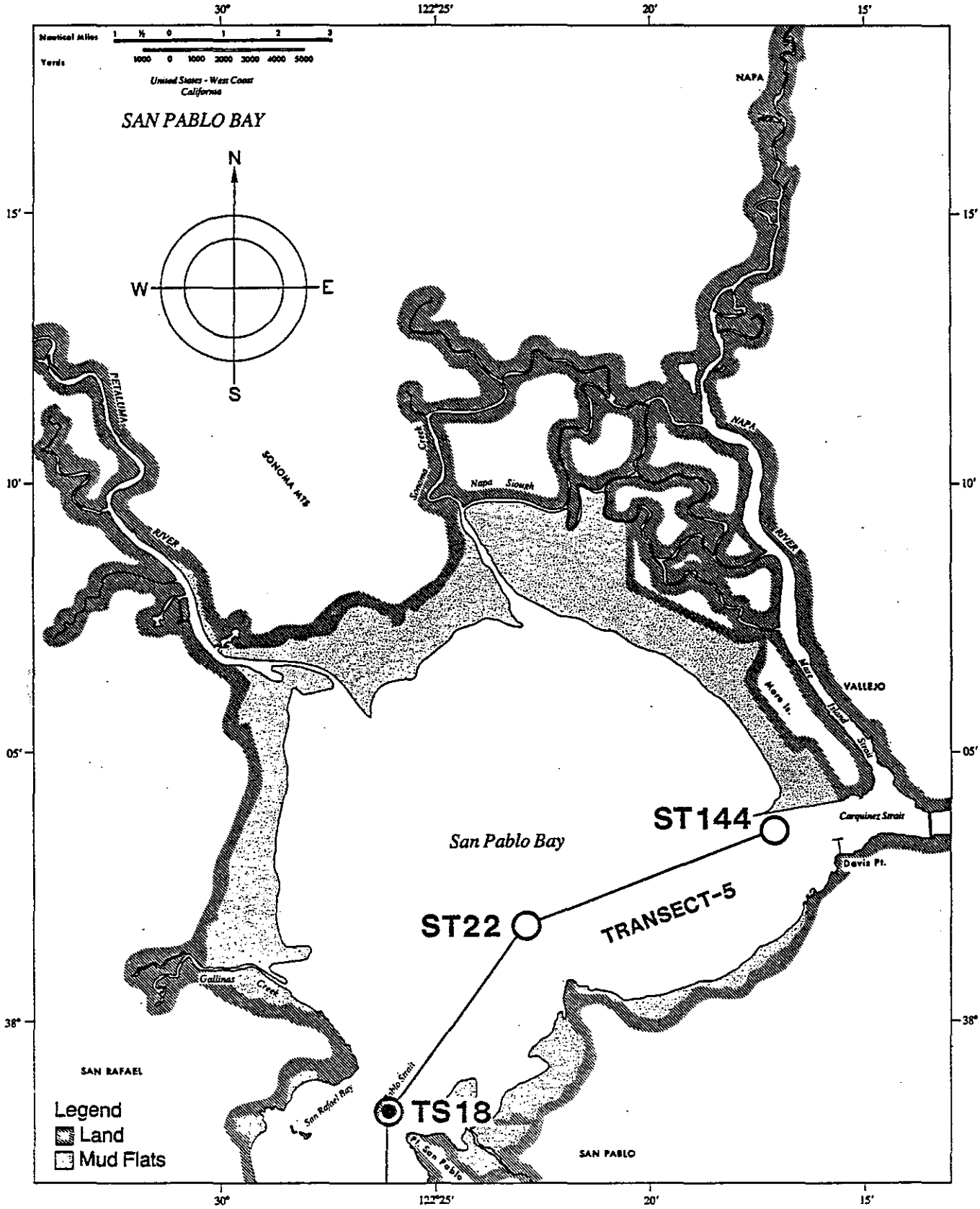

Figure 12c. NOS CTD Transects and Time Series Stations

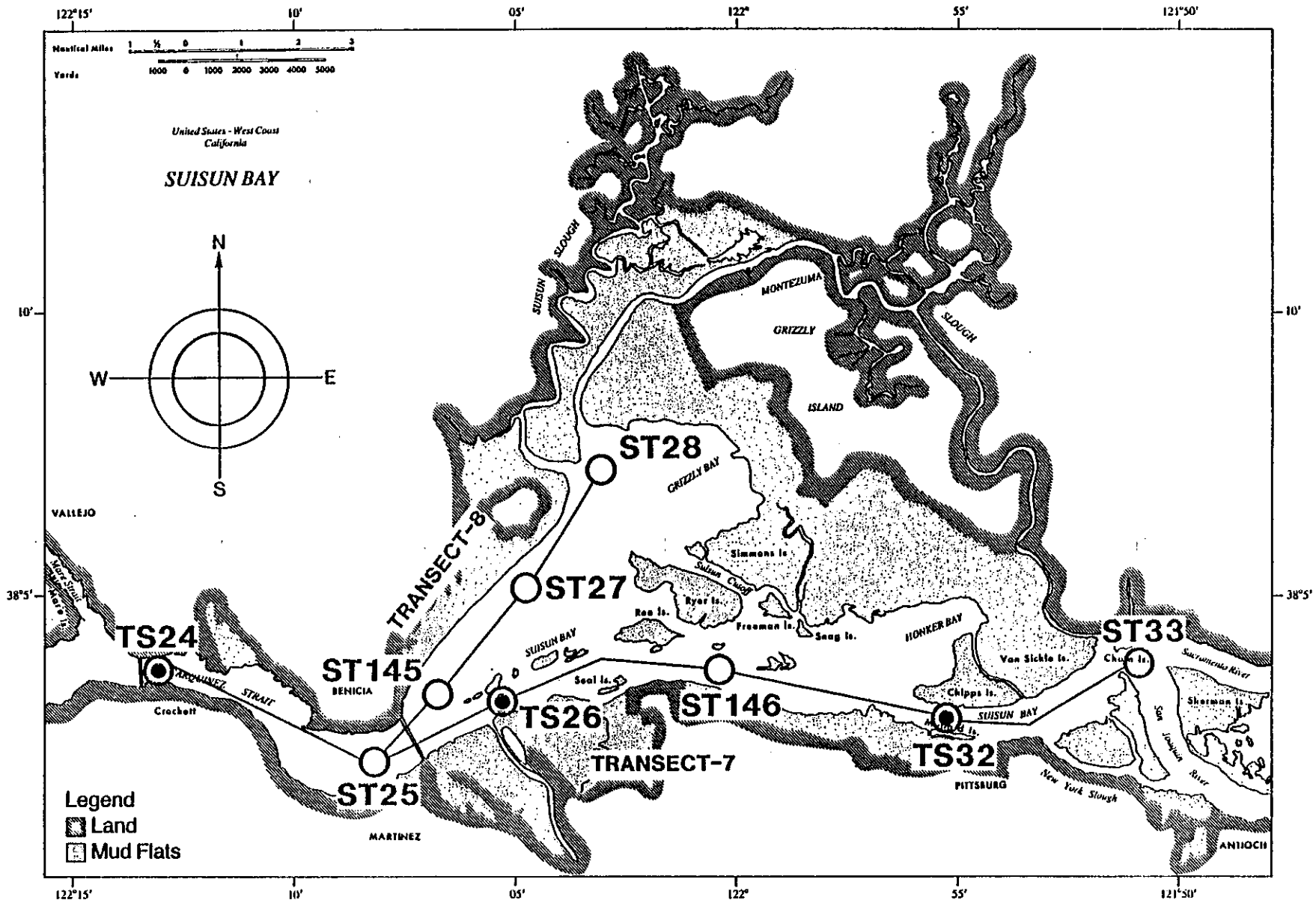

Figure 12d. NOS CTD Transects and Time Series Stations

Table 9. CTD Measurements Taken During the Spring 1979 Field Season of the San Francisco Bay Area Circulation Survey

Station Number	OBSERVATION INFORMATION							PROCESSING INFORMATION			
	Latitude (N) Longitude (W)	Date*	Time (UTC)	Water Depth (Meters)	Transect,** Single Station, or 25-Hour Time Series	Cast Number*	Bottom Data Depth (Meters)	P=Plessey M=Martek	Analog Trace Y=Yes N=No	Computer Tape Y or N	In Situ Data Sheet Y or N
TS 1	37°49'48" 122°28'18"	F 02/07/79	1841	95.2	25-Hour Time Series	F 1		P	Y	N	N
	37°49'48" 122°28'18"	L 02/08/79	1950	95.2	25-Hour Time Series	L 51		P	Y	N	N
ST 1	37°49'12" 122°28'18"	02/16/79	0544	48.8	Transect 2, 1st	261		P	Y	N	N
	37°49'12" 122°28'18"	02/16/79	1450	89.7	Transect 2, 2nd	264		P	Y	N	N
	37°49'24" 122°28'30"	02/28/79	1731	93.9	Transect 2, 3rd	323		P	Y	N	N
	37°49'12" 122°28'48"	03/01/79	0030	95.2	Transect 2, 4th	334		P	Y	N	N
	37°49'18" 122°28'24"	03/19/79	1952	91.5	Transect 2, 5th	347		P	Y	N	N
	37°51'12" 122°24'36"	03/20/79	0245	97.0	Transect 2, 6th	357		P	Y	N	N
TS 1	37°49'18" 122°28'18"	F 04/24/79	2330	97.0	25-Hour Time Series	F 598		P	Y	N	N
	37°49'18" 122°28'18"	L 04/26/79	0030	97.0	25-Hour Time Series	L 648		P	Y	N	N

* F refers to first cast of a time series
L refers to last cast of a time series

** Transect 2, 1st: i.e., the first time that Transect 2 was run

Table 9. Continued

Station Number	OBSERVATION INFORMATION							PROCESSING INFORMATION			
	Latitude (N) Longitude (W)	Date*	Time (UTC)	Water Depth (Meters)	Transect,** Single Station, or 25-Hour Time Series	Cast Number*	Bottom Data Depth (Meters)	P=Plessey M=Martek	Analog Trace Y=Yes N=No	Computer Tape Y or N	In Situ Data Sheet Y or N
ST 2	37°48'36" 122°32'00"	02/16/79	0440	28.4	Transect 1, 1st	256		P	Y	N	N
	37°48'36" 122°32'00"	02/16/79	1612	27.5	Transect 1, 2nd	268		P	Y	N	N
	37°48'36" 122°31'12"	02/28/79	1641	48.5	Transect 1, 3rd	320		P	Y	N	N
	37°48'36" 122°31'12"	03/01/79	0126	32.9	Transect 1, 4th	337		P	Y	N	N
	37°48'36" 122°31'54"	03/19/79	1858	20.7	Transect 1, 5th	344		P	Y	N	N
	37°56'18" 122°26'42"	03/19/79	2142	39.3	Transect 1, 6th	354		P	Y	N	N
ST 3	37°48'12" 122°31'30"	02/16/79	0502	38.4	Transect 1, 1st	257		P	Y	N	N
	37°48'12" 122°31'06"	02/16/79	0527	45.8	Transect 2, 2st	260		P	Y	N	N
	37°48'12" 122°31'06"	02/16/79	1518	43.0	Transect 2, 2nd	265		P	Y	N	N
	37°48'12" 122°31'06"	02/16/79	1555	30.0	Transect 1, 2nd	267		P	Y	N	N
	37°48'06" 122°31'06"	02/28/79	1658	37.5	Transect 1, 3rd	321		P	Y	N	N
	37°48'06" 122°31'06"	03/01/79	0110	38.4	Transect 1, 4th	336		P	Y	N	N

Table 9. Continued

Station Number	OBSERVATION INFORMATION							PROCESSING INFORMATION			
	Latitude (N) Longitude (W)	Date*	Time (UTC)	Water Depth (Meters)	Transect,** Single Station, or 25-Hour Time Series	Cast Number*	Bottom Data Depth (Meters)	P=Plessey M=Martek	Analog Trace Y=Yes N=No	Computer Tape Y or N	In Situ Data Sheet Y or N
ST 3	37°48'12" 122°31'18"	03/19/79	1915	40.3	Transect 1, 5th	345		P	Y	N	N
	37°48'12" 122°31'18"	03/20/79	0143	40.3	Transect 1, 6th	355		P	Y	N	N
ST 4	37°48'18" 122°30'48"	02/16/79	0516	38.4	Transect 1, 1st	258		P	Y	N	N
	37°48'18" 122°30'48"	02/16/79	1533	45.8	Transect 1, 2nd	266		P	Y	N	N
	37°47'54" 122°30'18"	02/28/79	1712	37.0	Transect 1, 3rd	322		P	Y	N	N
	37°47'48" 122°30'54"	03/01/79	0057	40.3	Transect 1, 4th	355		P	Y	N	N
	37°47'48" 122°30'54"	03/19/79	1930	25.6	Transect 1, 5th	346		P	Y	N	N
	37°47'48" 122°30'54"	03/20/79	0154	43.6	Transect 1, 6th	356		P	Y	N	N
ST 5	37°51'06" 122°24'18"	02/16/79	0628	38.4	Transect 2, 1st	262		P	Y	N	N
	37°50'54" 122°24'46"	02/16/79	1405	45.8	Transect 2, 2nd	263		P	Y	N	N
	37°51'24" 122°24'48"	02/28/79	1815	40.3	Transect 2, 3rd	324		P	Y	N	N

Table 9. Continued

Station Number	OBSERVATION INFORMATION							PROCESSING INFORMATION			
	Latitude (N) Longitude (W)	Date*	Time (UTC)	Water Depth (Meters)	Transect,** Single Station, or 25-Hour Time Series	Cast Number*	Bottom Data Depth (Meters)	P=Plessey M=Martek	Analog Trace Y=Yes N=No	Computer Tape Y or N	In Situ Data Sheet Y or N
ST 5	37°51'12" 122°24'42"	03/01/79	0002	33.9	Transect 2, 4th	333		P	Y	N	N
	37°51'18" 122°24'12"	03/19/79	2024	31.1	Transect 2, 5th	348		P	Y	N	N
	37°51'12" 122°24'36"	03/20/79	0245	32.9	Transect 2, 6th	358		P	Y	N	N
ST 6	37°47'54" 122°22'12"	02/16/79	1659	19.9	Transect 3, 1st	M023	19.8	M	N	N	Y
	37°47'54" 122°22'12"	02/17/79	0051	19.9	Transect 3, 2nd	M034	19.8	M	N	N	Y
	37°47'48" 122°22'54"	02/28/79	1850	24.0	Transect 3, 5th	325		P	Y	N	N
	37°48'12" 122°22'48"	02/28/79	2335	25.5	Transect 3, 6th	332		P	Y	N	N
	37°47'54" 122°22'42"	03/19/79	1840	15.9	Transect 3, 3rd	M075	15.9	M	N	N	Y
	37°47'54" 122°22'42"	03/20/79	0115	18.3	Transect 3, 4th	M079	18.3	M	N	N	Y
ST 7	37°43'54" 122°19'48"	02/16/79	1751	13.2	Transect 3, 1st	M024	13.1	M	N	N	Y
	37°42'54" 122°19'48"	02/17/79	0021	14.1	Transect 3, 2nd	M033	14.0	M	N	N	Y

Table 9. Continued

Station Number	OBSERVATION INFORMATION							PROCESSING INFORMATION			
	Latitude (N) Longitude (W)	Date*	Time (UTC)	Water Depth (Meters)	Transect,** Single Station, or 25-Hour Time Series	Cast Number*	Bottom Data Depth (Meters)	P=Plessey M=Martek	Analog Trace Y=Yes N=No	Computer Tape Y or N	In Situ Data Sheet Y or N
ST 7	37°42'30" 122°19'48"	02/28/79	1918	13.2	Transect 3, 3rd	326		P	Y	N	N
	37°43'06" 122°19'42"	02/28/79	2259	13.4	Transect 3, 4th	331		P	Y	N	N
S 8	37°44'48" 122°16'54"	02/28/79	1740	3.9	Single Station	M052	3.8	M	N	N	Y
	37°44'48" 122°16'54"	03/01/79	0125	3.6	Single Station	M067	3.5	M	N	N	Y
	37°44'48" 122°16'54"	03/01/79	0415	3.0	Single Station	338		P	Y	N	N
ST 9	37°40'00" 122°19'18"	02/16/79	1809	9.3	Transect 3, 1st	M025	9.2	M	N	N	Y
	37°40'00" 122°19'18"	02/16/79	2356	9.5	Transect 3, 2nd	M032	9.2	M	N	N	Y
	37°40'00" 122°19'18"	02/21/79	2230	7.9	Transect 4, 1st	M042	7.6	M	N	N	Y
	37°40'00" 122°19'18"	02/23/79	1550	10.5	Transect 4, 2nd	M047	10.4	M	N	N	Y
	37°40'00" 122°19'24"	02/28/79	1944	9.0	Transect 3, 3rd	327		P	Y	N	N
	37°39'48" 122°19'18"	02/28/79	2235	11.8	Transect 3, 4th	330		P	Y	N	N

Table 9. Continued

Station Number	OBSERVATION INFORMATION							PROCESSING INFORMATION			
	Latitude (N) Longitude (W)	Date*	Time (UTC)	Water Depth (Meters)	Transect,** Single Station, or 25-Hour Time Series	Cast Number*	Bottom Data Depth (Meters)	P=Plessey M=Martek	Analog Trace Y=Yes N=No	Computer Tape Y or N	In Situ Data Sheet Y or N
ST 10	37°41'48" 122°13'24"	02/21/79	2355	2.4	Transect 4, 1st	M045	2.3	M	N	N	Y
	37°41'24" 122°14'18"	02/23/79	1910	4.6	Transect 4, 2nd	M050	4.6	M	N	N	Y
	37°41'18" 122°14'18"	02/28/79	1800	3.9	Transect 4, 3rd	M053	3.8	M	N	N	Y
	37°41'18" 122°14'18"	02/29/79	0050	4.4	Transect 4, 4th	M066	4.3	M	N	N	Y
S 11	37°37'30" 122°13'54"	02/28/79	2020	4.6	Single Station	M057	4.6	M	N	N	Y
	37°37'30" 122°13'54"	02/28/79	2320	5.0	Single Station	M062	4.9	M	N	N	Y
TS 12	37°33'36" 122°11'36"	F 02/28/79	2239	16.5	25-Hour Time Series	F 52		P	Y	N	N
	37°33'36" 122°11'36"	L 02/29/79	2336	16.5	25-Hour Time Series	L 101		P	Y	N	N
ST 12	37°33'18" 122°11'42"	02/16/79	1902	13.4	Transect 3, 1st	M027	13.4	M	N	N	Y
	37°33'18" 122°11'42"	02/16/79	2312	13.9	Transect 3, 2nd	M030	13.8	M	N	N	Y
TS 12	37°33'18" 122°11'18"	F 04/26/79	0235	16.2	25-Hour Time Series	F 649		P	Y	N	N
	37°33'18" 122°11'18"	L 04/27/79	0330	16.2	25-Hour Time Series	L 699		P	Y	N	N

Table 9. Continued

Station Number	OBSERVATION INFORMATION							PROCESSING INFORMATION			
	Latitude (N) Longitude (W)	Date*	Time (UTC)	Water Depth (Meters)	Transect,** Single Station, or 25-Hour Time Series	Cast Number*	Bottom Data Depth (Meters)	P=Plessey M=Martek	Analog Trace Y=Yes N=No	Computer Tape Y or N	In Situ Data Sheet Y or N
ST 13	37°30'06" 122°06'54"	02/16/79	1927	16.9	Transect 3, 1st	M028	16.8	M	N	N	Y
	37°30'06" 122°06'54"	02/16/79	2232	16.9	Transect 3, 2nd	M029	16.8	M	N	N	Y
	37°30'06" 122°06'54"	02/28/79	2105	18.4	Transect 3, 3rd	M058	18.3	M	N	N	Y
	37°30'06" 122°06'54"	02/28/79	2240	16.9	Transect 3, 4th	M061	16.8	M	N	N	Y
S 14	37°29'18" 122°04'42"	02/28/79	2120	5.9	Single Station	M059	5.8	M	N	N	Y
	37°29'18" 122°04'42"	02/28/79	2220	5.4	Single Station	M060	5.3	M	N	N	Y
ST 15	37°52'24" 122°21'24"	02/16/79	0750	3.8	Transect 2, 1st	M021	3.8	M	N	N	Y
	37°52'12" 122°21'42"	02/16/79	1236	3.1	Transect 2, 2nd	M022	3.1	M	N	N	Y
	37°52'18" 122°21'18"	02/28/79	1640	3.1	Transect 2, 3rd	M051	3.1	M	N	N	Y
	37°52'30" 122°21'18"	03/01/79	0300	3.2	Transect 2, 4th	M068	3.1	M	N	N	Y
	37°52'18" 122°21'30"	03/19/79	1905	3.2	Transect 2, 5th	M076	3.1	M	N	N	Y
	37°52'18" 122°21'30"	03/20/79	0145	3.8	Transect 2, 6th	M080	3.8	M	N	N	Y

Table 9. Continued

Station Number	OBSERVATION INFORMATION							PROCESSING INFORMATION			
	Latitude (N) Longitude (W)	Date*	Time (UTC)	Water Depth (Meters)	Transect,** Single Station, or 25-Hour Time Series	Cast Number*	Bottom Data Depth (Meters)	P=Plessey M=Martek	Analog Trace Y=Yes N=No	Computer Tape Y or N	In Situ Data Sheet Y or N
S 16	37°52'24" 122°26'12"	03/19/79	2045	35.0	Single Station	349		P	Y	N	N
	37°52'18" 122°26'12"	03/20/79	0303	38.1	Single Station	359		P	Y	N	N
ST 17	37°54'36" 122°26'48"	03/01/79	1815	11.6	Transect 5, 1st	340		P	Y	N	N
	37°54'48" 122°26'48"	03/02/79	0050	15.1	Transect 5, 2nd	M073	14.9	M	N	N	Y
	37°54'54" 122°26'42"	03/19/79	2126	13.7	Transect 5, 3rd	351		P	Y	N	N
	37°54'42" 122°26'36"	03/20/79	0354	15.2	Transect 5, 4th	361		P	Y	N	N
	37°54'54" 122°26'54"	04/11/79	0225	14.3	Transect 5, 5th	472		P	Y	N	N
	37°54'54" 122°26'48"	04/11/79	2044	15.4	Transect 5, 6th	477		P	Y	N	N
TS 18	37°58'55" 122°26'45"	F 02/20/79	1844	22.3	25-Hour Time Series	F 269		P	Y	N	N
	37°58'55" 122°26'45"	L 02/21/79	1926	22.3	25-Hour Time Series	L 319		P	Y	N	N
ST 18	37°58'36" 122°26'24"	03/01/79	1848	22.0	Transect 5, 1st	341		P	Y	N	N
	37°58'18" 122°26'30"	03/02/79	0008	22.0	Transect 5, 2nd	M072	22.0	M	N	N	Y

Table 9. Continued

Station Number	OBSERVATION INFORMATION							PROCESSING INFORMATION			
	Latitude (N) Longitude (W)	Date*	Time (UTC)	Water Depth (Meters)	Transect,** Single Station, or 25-Hour Time Series	Cast Number*	Bottom Data Depth (Meters)	P=Plessey M=Martek	Analog Trace Y=Yes N=No	Computer Tape Y or N	In Situ Data Sheet Y or N
ST18	37°58'24" 122°26'18"	03/20/79	1449	24.2	Transect 5, 3rd	363		P	Y	N	N
	37°58'36" 122°25'30"	03/20/79	2032	22.0	Transect 5, 4th	366		P	Y	N	N
TS 18	37°58'54" 122°26'24"	F 04/09/79	1830	21.0	25-Hour Time Series	F 420		P	Y	N	N
TS 18	37°58'54" 122°26'24"	L 04/10/79	1929	21.0	25-Hour Time Series	L 470		P	Y	N	N
ST 18	37°58'24" 122°26'24"	04/11/79	0250	22.7	Transect 5, 5th	473		P	Y	N	N
	37°58'18" 122°26'18"	04/11/79	2109	24.2	Transect 5, 6th	478		P	Y	N	N
S 19	38°01'30" 122°25'36"	03/20/79	1440	5.9	Single Station	M083	5.8	M	N	N	Y
	38°01'30 122°25'36"	03/20/79	2050	4.7	Single Station	M085	4.6	M	N	N	Y
ST 22	38°01'42" 122°22'24"	03/01/79	1933	12.8	Transect 5, 1st	342		P	Y	N	N
	38°01'48" 122°22'12"	03/01/79	2325	14.7	Transect 5, 2nd	M071	14.6	M	N	N	Y
	38°01'42" 122°22'30"	03/20/79	1524	14.7	Transect 5, 3rd	364		P	Y	N	N

Table 9. Continued

Station Number	OBSERVATION INFORMATION							PROCESSING INFORMATION			
	Latitude (N) Longitude (W)	Date*	Time (UTC)	Water Depth (Meters)	Transect,** Single Station, or 25-Hour Time Series	Cast Number*	Bottom Data Depth (Meters)	P=Plessey M=Martek	Analog Trace Y=Yes N=No	Computer Tape Y or N	In Situ Data Sheet Y or N
ST22	38°01'51" 122°02'39"	03/20/79	2106	12.3	Transect 5, 4th	367		P	Y	N	N
	38°01'54" 122°22'36"	04/11/79	0321	8.0	Transect 5, 5th	474		P	Y	N	N
	38°01'54" 122°27'24"	04/11/79	2136	13.0	Transect 5, 6th	479		P	Y	N	N
S 23	38°04'18" 122°20'48"	03/20/79	1548	3.4	Single Station	M084	3.4	M	N	N	Y
	38°04'30" 122°20'30"	03/20/79	2135	2.4	Single Station	M086	2.4	M	N	N	Y
ST 24	38°03'18" 122°13'12"	02/14/79	1800	18.3	Transect 7, 1st	M009	18.3	M	N	N	Y
TS 24	38°03'42" 122°13'06"	F 02/15/79	0037	21.0	25-Hour Time Series	F 205		P	Y	N	N
	38°03'42" 122°13'06"	L 02/16/79	0130	21.0	25-Hour Time Series	L 255		P	Y	N	N
ST 24	38°03'36" 122°13'06"	02/15/79	0128	18.3	Transect 7, 2nd	M020	18.3	M	N	N	Y
TS 24	38°03'42" 122°12'48"	F 04/05/79	0114	18.3	25-Hour Time Series	F 369		P	Y	N	N
	38°03'42" 122°12'48"	04/05/79	0230	18.3	25-Hour Time Series	0372A	16.8	M	N	N	Y
	38°03'42" 122°12'48"	L 04/06/79	0200	18.3	25-Hour Time Series	L 419		P	Y	N	N

Table 9. Continued

Station Number	OBSERVATION INFORMATION							PROCESSING INFORMATION			
	Latitude (N) Longitude (W)	Date*	Time (UTC)	Water Depth (Meters)	Transect,** Single Station, or 25-Hour Time Series	Cast Number*	Bottom Data Depth (Meters)	P=Plessey M=Martek	Analog Trace Y=Yes N=No	Computer Tape Y or N	In Situ Data Sheet Y or N
ST 24	38°03'42" 122°12'48"	04/23/79	2047	18.1	Transect 7, 3rd	584		P	Y	N	N
	38°03'42" 122°12'48"	04/24/79	1539	17.4	Transect 7, 4th	592		P	Y	N	N
ST 25	38°02'06" 122°08'24"	02/13/79	1906	16.8	Transect 8, 1st	M001	16.8	M	N	N	Y
ST 25	38°02'00" 122°08'36"	02/14/79	0024	15.3	Transect 8, 2nd	M008	15.3	M	N	N	Y
	38°01'54" 122°08'30"	02/14/79	1850	14.3	Transect 7, 1st	M010	14.3	M	N	N	Y
	38°01'54" 122°08'18"	02/15/79	0104	15.9	Transect 7, 2nd	M019	15.9	M	N	N	Y
	38°01'54" 122°08'18"	04/13/79	0041	15.4	Transect 8, 3rd	M096	15.3	M	N	N	Y
	38°02'24" 122°08'00"	04/13/79	1828	14.6	Transect 8, 4th	M100	14.5	M	N	N	Y
	38°02'12" 122°08'12"	04/23/79	2123	17.9	Transect 7, 3rd	585		P	Y	N	N
	38°02'18" 122°07'48"	04/24/79	1610	18.7	Transect 7, 4th	593		P	Y	N	N
TS 26	38°03'06" 122°05'24"	F 02/13/79	2233	17.1	25-Hour Time Series	F 154		P	Y	N	N
	38°03'06" 122°05'24"	L 02/14/79	0204	17.1	25-Hour Time Series	L 204		P	Y	N	N

Table 9. Continued

Station Number	OBSERVATION INFORMATION							PROCESSING INFORMATION			
	Latitude (N) Longitude (W)	Date*	Time (UTC)	Water Depth (Meters)	Transect,** Single Station, or 25-Hour Time Series	Cast Number*	Bottom Data Depth (Meters)	P=Plessey M=Martek	Analog Trace Y=Yes N=No	Computer Tape Y or N	In Situ Data Sheet Y or N
ST 26	38°03'12" 122°05'18"	02/14/79	1911	13.1	Transect 7, 1st	M011	13.1	M	N	N	Y
	38°03'06" 122°05'24"	02/15/79	0048	14.6	Transect 7, 2nd	M018	14.6	M	N	N	Y
TS 26	38°03'12" 122°05'18"	F 04/12/79	0133	12.8	25-Hour Time Series	F 481		P	Y	N	N
TS 26	38°03'12" 122°05'18"	L 04/13/79	0230	12.8	25-Hour Time Series	L 531		P	Y	N	N
	38°03'12" 122°05'18"	F 04/12/79	0240	12.2	25-Hour Time Series	F 483A	7.6 (min)	M	N	N	Y
	38°03'12" 122°05'18"	L 04/13/79	0233	12.2	25-Hour Time Series	L 531A	12.8 (max)	M	N	N	Y
ST 26	38°03'00" 122°05'30"	04/23/79	2145	19.4	Transect 7, 3rd	586		P	Y	N	N
	38°03'00" 122°05'30"	04/23/79	1640	18.7	Transect 7, 4th	594		P	Y	N	N
ST 27	38°04'48" 122°04'54"	02/13/79	2024	10.8	Transect 8, 1st	M003	10.7	M	N	N	Y
	38°04'48" 122°04'54"	02/13/79	2331	10.8	Transect 8, 2nd	M006	10.7	M	N	N	Y
	38°04'54" 122°04'54"	04/12/79	2345	10.8	Transect 8, 3rd	M094	10.7	M	N	N	Y
	38°04'54" 122°04'54"	04/13/79	1737	9.6	Transect 8, 4th	M098	9.5	M	N	N	Y

Table 9. Continued

Station Number	OBSERVATION INFORMATION							PROCESSING INFORMATION			
	Latitude (N) Longitude (W)	Date*	Time (UTC)	Water Depth (Meters)	Transect,** Single Station, or 25-Hour Time Series	Cast Number*	Bottom Data Depth (Meters)	P=Plessey M=Martek	Analog Trace Y=Yes N=No	Computer Tape Y or N	In Situ Data Sheet Y or N
ST 28	38°07'12" 122°03'06"	02/13/79	2115	3.2	Transect 8, 1st	M004	3.1	M	N	N	Y
	38°07'12" 122°03'06"	02/13/79	2300	3.9	Transect 8, 2nd	M005	3.8	M	N	N	Y
	38°07'18" 122°03'12"	04/12/79	2311	3.8	Transect 8, 3rd	M093	3.7	M	N	N	Y
	38°07'12" 122°03'06"	04/13/79	1704	1.6	Transect 8, 4th	M097	1.5	M	N	N	Y
TS 32	38°02'48" 121°53'42"	F 02/12/79	2000	13.1	25-Hour Time Series	F 102		P	Y	N	N
	38°02'48" 121°53'42"	L 02/13/79	2055	13.1	25-Hour Time Series	L 153		P	Y	N	N
ST 32	38°02'48" 121°55'06"	02/14/79	2006	13.1	Transect 7, 1st	M013	13.1	M	N	N	Y
	38°02'48" 121°55'12"	02/15/79	0005	13.1	Transect 7, 2nd	M016	13.1	M	N	N	Y
TS 32	38°02'54" 121°53'36"	F 04/17/79	0203	12.8	25-Hour Time Series	F 532		P	Y	N	N
	38°02'54" 121°53'36"	L 04/18/79	0305	12.8	25-hour time series	L 582		P	Y	N	N
ST 32	38°02'42" 121°55'30"	04/23/79	2243	14.6	Transect 7, 3rd	588		P	Y	N	N
	38°02'42" 121°55'18"	04/24/79	1734	16.5	Transect 7, 4th	596		P	Y	N	N

Table 9. Continued

Station Number	OBSERVATION INFORMATION							PROCESSING INFORMATION			
	Latitude (N) Longitude (W)	Date*	Time (UTC)	Water Depth (Meters)	Transect,** Single Station, or 25-Hour Time Series	Cast Number*	Bottom Data Depth (Meters)	P=Plessey M=Martek	Analog Trace Y=Yes N=No	Computer Tape Y or N	In Situ Data Sheet Y or N
ST 33	38°03'36" 121°51'12"	02/14/79	2113	9.6	Transect 7, 1st	M014	9.5	M	N	N	Y
	38°03'36" 121°51'12"	02/14/79	2330	10.1	Transect 7, 2nd	M015	10.1	M	N	N	Y
	38°03'42" 121°51'36"	04/23/79	2325	15.6	Transect 7, 3rd	589		P	Y	N	N
	38°03'48" 121°51'24"	04/24/79	1759	18.7	Transect 7, 4th	597		P	Y	N	N
ST 136	37°35'36" 122°15'00"	02/16/79	1841	6.2	Transect 3, 1st	M026	6.1	M	N	N	Y
	37°35'36" 122°15'00"	02/16/79	2329	6.4	Transect 3, 2nd	M031	6.4	M	N	N	Y
	37°35'18" 122°15'18"	02/28/79	2032	15.3	Transect 3, 5th	328		P	Y	N	N
	37°35'18" 122°15'18"	02/28/79	2158	15.3	Transect 3, 6th	329		P	Y	N	N
ST 137	37°39'18" 122°21'48"	02/21/79	2205	4.7	Transect 4, 1st	M041	4.6	M	N	N	Y
	37°39'18" 122°21'48"	02/23/79	1735	7.7	Transect 4, 2nd	M046	7.6	M	N	N	Y
	37°39'24" 122°21'54"	02/28/79	1935	6.9	Transect 4, 3rd	M056	6.9	M	N	N	Y
	37°39'30" 122°21'54"	03/01/79	0005	5.9	Transect 4, 4th	M063	5.8	M	N	N	Y

Table 9. Continued

Station Number	OBSERVATION INFORMATION							PROCESSING INFORMATION			
	Latitude (N) Longitude (W)	Date*	Time (UTC)	Water Depth (Meters)	Transect,** Single Station, or 25-Hour Time Series	Cast Number*	Bottom Data Depth (Meters)	P=Plessey M=Martek	Analog Trace Y=Yes N=No	Computer Tape Y or N	In Situ Data Sheet Y or N
ST 138	37°40'36" 122°18'00"	02/21/79	2300	9.3	Transect 4, 1st	M043	9.2	M	N	N	Y
	37°40'24" 122°17'54"	02/23/79	1810	10.2	Transect 4, 2nd	M048	10.1	M	N	N	Y
ST 138	37°40'24" 122°18'00"	02/28/79	1910	9.2	Transect 4, 3rd	M055	9.2	M	N	N	Y
	37°40'42" 122°17'42"	03/01/79	0025	10.8	Transect 4, 4th	M064	10.7	M	N	N	Y
ST 139	37°41'06" 122°16'12"	02/21/79	2340	7.7	Transect 4, 1st	M044	7.6	M	N	N	Y
	37°41'06" 122°16'12"	02/23/79	1930	7.7	Transect 4, 2nd	M049	7.6	M	N	N	Y
	37°40'48" 122°16'12"	02/28/79	1845	6.9	Transect 4, 3rd	M054	6.9	M	N	N	Y
	37°41'00" 122°16'24"	03/01/79	0040	6.2	Transect 4, 4th	M065	6.1	M	N	N	Y
ST 140	37°52'42" 122°24'30"	03/01/79	1744	13.1	Transect 5, 1st	339		P	Y	N	N
	37°52'36" 122°24'18"	03/02/79	1313	15.4	Transect 5, 2nd	M074	15.3	M	N	N	Y
	37°52'36" 122°25'45"	03/19/79	2103	11.9	Transect 5, 3rd	350		P	Y	N	N

Table 9. Continued

Station Number	OBSERVATION INFORMATION							PROCESSING INFORMATION			
	Latitude (N) Longitude (W)	Date*	Time (UTC)	Water Depth (Meters)	Transect,** Single Station, or 25-Hour Time Series	Cast Number*	Bottom Data Depth (Meters)	P=Plessey M=Martek	Analog Trace Y=Yes N=No	Computer Tape Y or N	In Situ Data Sheet Y or N
ST140	37°53'00" 122°24'30"	03/20/79	0333	12.8	Transect 5, 4th	360		P	Y	N	N
	37°52'54" 122°24'24"	04/11/79	0151	12.4	Transect 5, 5th	471		P	Y	N	N
	37°53'00" 122°24'24"	04/11/79	2018	12.4	Transect 5, 6th	476		P	Y	N	N
ST 141	37°56'30" 122°28'18"	02/20/79	2230	3.5	Transect 6, 1st	M035	3.4	M	N	N	Y
	37°56'30" 122°28'12"	02/21/79	1715	5.4	Transect 6, 2nd	M038	5.3	M	N	N	Y
	37°56'30" 122°28'12"	03/19/79	2000	3.8	Transect 6, 3rd	M077	3.8	M	N	N	Y
	37°56'30" 122°28'12"	03/20/79	0235	4.9	Transect 6, 4th	M082	4.6	M	N	N	Y
	37°56'30" 122°28'08"	04/09/79	1958	4.7	Transect 6, 5th	M087	4.6	M	N	N	Y
	37°56'30" 122°28'08"	04/10/79	0245	4.7	Transect 6, 6th	M090	4.6	M	N	N	Y
ST 142	37°56'12" 122°27'00"	02/20/79	2258	18.0	Transect 6, 1st	M036	18.0	M	N	N	Y
	37°56'12" 122°27'00"	02/21/79	1735	19.8	Transect 6, 2nd	M039	19.8	M	N	N	Y

Table 9. Continued

Station Number	OBSERVATION INFORMATION							PROCESSING INFORMATION			
	Latitude (N) Longitude (W)	Date*	Time (UTC)	Water Depth (Meters)	Transect,** Single Station, or 25-Hour Time Series	Cast Number*	Bottom Data Depth (Meters)	P=Plessey M=Martek	Analog Trace Y=Yes N=No	Computer Tape Y or N	In Situ Data Sheet Y or N
ST142	37°56'18" 122°26'42"	03/19/79	2142	12.8	Transect 6, 3rd	352		P	Y	N	N
	37°56'18" 122°26'54"	03/20/79	0411	13.2	Transect 6, 4th	362		P	Y	N	N
	37°56'18" 122°26'07"	04/09/79	2026	13.1	Transect 6, 5th	M088	13.0	M	N	N	Y
	37°56'18" 122°26'07"	04/10/79	0322	16.9	Transect 6, 6th	M091	16.8	M	N	N	Y
ST 143	37°56'06" 122°25'18"	02/20/79	2321	12.3	Transect 6, 1st	M037	12.2	M	N	N	Y
	37°56'00" 122°25'18"	02/21/79	1800	12.3	Transect 6, 2nd	M040	12.2	M	N	N	Y
	37°56'06" 122°25'18"	03/19/79	2015	12.3	Transect 6, 3rd	M078	12.2	M	N	N	Y
	37°56'06" 122°25'18"	03/20/79	0215	13.8	Transect 6, 4th	M081	13.7	M	N	N	Y
	37°56'04" 122°25'15"	04/09/79	2050	10.0	Transect 6, 5th	M089	9.9	M	N	N	Y
	37°56'05" 122°25'15"	04/10/79	0347	15.0	Transect 6, 6th	M092	14.9	M	N	N	Y

Table 9. Continued

Station Number	OBSERVATION INFORMATION							PROCESSING INFORMATION			
	Latitude (N) Longitude (W)	Date*	Time (UTC)	Water Depth (Meters)	Transect,** Single Station, or 25-Hour Time Series	Cast Number*	Bottom Data Depth (Meters)	P=Piessey M=Martek	Analog Trace Y=Yes N=No	Computer Tape Y or N	In Situ Data Sheet Y or N
ST 144	38°03'30" 122°17'18"	03/01/79	2204	14.4	Transect 5, 1st	M069	14.3	M	N	N	Y
	38°03'24" 122°17'15"	03/01/79	2246	14.7	Transect 5, 2nd	M070	14.6	M	N	N	Y
	38°03'30" 122°17'12"	03/20/79	1559	13.7	Transect 5, 3rd	365		P	Y	N	N
	38°03'30" 122°17'12"	03/20/79	2151	13.2	Transect 5, 4th	368		P	Y	N	N
	38°03'18" 122°17'30"	04/11/79	0356	13.2	Transect 5, 5th	475		P	Y	N	N
	38°03'30" 122°17'18"	04/11/79	2210	13.5	Transect 5, 6th	480		P	Y	N	N
	38°03'36" 122°17'06"	04/23/79	2012	13.5	Transect 7, 3rd	583		P	Y	N	N
	38°03'48" 122°16'06"	04/24/79	1510	14.6	Transect 7, 4th	591		P	Y	N	N
ST 145	38°05'24" 122°06'42"	02/13/79	1953	10.8	Transect 8, 1st	M002	10.7	M	N	N	Y
	38°03'12" 122°06'42"	02/14/79	0000	11.1	Transect 8, 2nd	M007	10.7	M	N	N	Y
	38°03'18" 122°06'48"	04/13/79	0010	8.0	Transect 8, 3rd	M095	7.9	M	N	N	Y
	38°03'18" 122°06'48"	04/13/79	1808	9.3	Transect 8, 4th	M099	9.2	M	N	N	Y

Table 9. Continued

Station Number	OBSERVATION INFORMATION							PROCESSING INFORMATION			
	Latitude (N) Longitude (W)	Date*	Time (UTC)	Water Depth (Meters)	Transect,** Single Station, or 25-Hour Time Series	Cast Number*	Bottom Data Depth (Meters)	P=Plessey M=Martek	Analog Trace Y=Yes N=No	Computer Tape Y or N	In Situ Data Sheet Y or N
ST 146	38°03'18" 122°00'24"	02/14/79	1934	12.8	Transect 7, 1st	M012	12.8	M	N	N	Y
	38°03'18" 122°00'24"	02/15/79	0024	13.1	Transect 7, 2nd	M017	13.1	M	N	N	Y
	38°03'43" 122°00'48"	04/23/79	2214	14.3	Transect 7, 3rd	0587		P	Y	N	N
	38°03'18" 122°00'24"	04/24/79	1709	12.3	Transect 7, 4th	595		P	Y	N	N

Table 10. CTD Measurements Taken During the Fall 1979 Field Season of the San Francisco Bay Area Circulation Survey

Station Number	OBSERVATION INFORMATION							PROCESSING INFORMATION			
	Latitude (N) Longitude (W)	Date*	Time (UTC)	Water Depth (Meters)	Transect,** Single Station, or 25-Hour Time Series	Cast Number*	Bottom Data Depth (Meters)	P=Plessey M=Martek	Analog Trace Y=Yes N=No	Computer Tape Y or N	In Situ Data Sheet Y or N
TS 1	37°49'30" 122°26'42"	F 10/11/79	1647	28.0	25-Hour Time Series	F 52		P	Y	N	N
	37°49'30" 122°26'42"	L 10/12/79	1800	28.0	25-Hour Time Series	L 102		P	Y	N	N
ST 1	37°49'14" 122°28'19"	10/15/79	1715	93.3	Transect 2, 1st	106		P	Y	N	N
	37°49'14" 122°28'18"	10/15/79	2329	95.2	Transect 2, 2nd	113		P	Y	N	N
ST 2	37°48'37" 122°31'22"	10/15/79	1620	43.9	Transect 1, 1st	103		P	Y	N	N
S 2	37°48'38" 122°31'20"	10/15/79	2151	42.1	Single Station	109		P	Y	N	N
ST 2	37°48'38" 122°31'20"	10/15/79	2233	42.1	Transect 1, 2nd	110		P	Y	N	N
ST 3	37°48'11" 122°31'02"	10/15/79	1635	38.8	Transects 1 and 2, 1st	104		P	Y	N	N
	37°48'06" 122°31'06"	10/15/79	2252	37.5	Transects 1 and 2, 2nd	111		P	Y	N	N

* F refers to first cost of a time series
L refers to last cost of a time series

** Transect 2, 1st: i.e., the first time that Transect 2 was run

Table 10. Continued

Station Number	OBSERVATION INFORMATION							PROCESSING INFORMATION			
	Latitude (N) Longitude (W)	Date*	Time (UTC)	Water Depth (Meters)	Transect,** Single Station, or 25-Hour Time Series	Cast Number*	Bottom Data Depth (Meters)	P=Plessey M=Martek	Analog Trace Y=Yes N=No	Computer Tape Y or N	In Situ Data Sheet Y or N
ST 4	37°47'47" 122°30'45"	10/15/79	1648	49.8	Transect 1, 1st	105		P	Y	N	N
	37°47'47" 122°30'48"	10/15/79	2307	37.5	Transect 1, 2nd	112		P	Y	N	N
ST 5A	37°50'47" 122°25'26"	10/15/79	1747	22.9	Transect 2, 1st	107		P	Y	N	N
	37°50'42" 122°25'18"	10/15/79	2359	29.3	Transect 2, 2nd	114		P	Y	N	N
ST 15	37°51'38" 122°23'30"	10/15/79	1808	11.3	Transect 2, 1st	108		P	Y	N	N
	37°51'23" 122°23'32"	10/16/79	0025	10.4	Transect 2, 2nd	115		P	Y	N	N
TS 26	38°02'42" 122°06'48"	F 11/06/79	2335	11.5	25-Hour Time Series	F 167		P	Y	N	N
	38°02'42" 122°06'48"	L 11/08/79	0027	11.5	25-Hour Time Series	L 216		P	Y	N	N
	38°02'36" 122°06'54"	F 11/26/79	2338	11.0	25-Hour Time Series	F 217		P	Y	N	N
	38°02'36" 122°06'54"	L 11/28/79	0030	11.0	25-Hour Time Series	L 267		P	Y	N	N

Table 10. Continued

Station Number	OBSERVATION INFORMATION							PROCESSING INFORMATION			
	Latitude (N) Longitude (W)	Date*	Time (UTC)	Water Depth (Meters)	Transect,** Single Station, or 25-Hour Time Series	Cast Number*	Bottom Data Depth (Meters)	P=Plessey M=Martek	Analog Trace Y=Yes N=No	Computer Tape Y or N	In Situ Data Sheet Y or N
TS 215	37°56'54" 122°27'12"	F 10/18/79	1744	16.3	25-Hour Time Series	F 116		P	Y	N	N
	37°56'54" 122°27'12"	L 10/19/79	1830	16.3	25-Hour Time Series	L 166		P	Y	N	N
TS 225	37°47'24" 122°21'24"	F 09/27/79	0902	19.4	25-Hour Time Series	F 1		P	Y	N	N
	37°47'24" 122°21'24"	L 09/28/79	1000	19.4	25-Hour Time Series	L 51		P	Y	N	N

Table 11. CTD Measurements Taken During the 1980 Field Season of the San Francisco Bay Area Circulation Survey

Station Number	OBSERVATION INFORMATION							PROCESSING INFORMATION			
	Latitude (N) Longitude (W)	Date*	Time (UTC)	Water Depth (Meters)	Transect,** Single Station, or 25-Hour Time Series	Cast Number*	Bottom Data Depth (Meters)	P=Plessey M=Martek	Analog Trace Y=Yes N=No	Computer Tape Y or N	In Situ Data Sheet Y or N
TS 1	37°49'24" 122°26'54"	F 04/23/80	1802	29.3	25-Hour Time Series	F 1		P	Y	N	N
	37°49'24" 122°26'54"	L 04/24/80	1901	29.3	25-Hour Time Series	L 44		P	Y	N	N
ST 1	37°49'24" 122°26'54"	04/25/80	0027	91.5	Transect 2, 1st	49		P	Y	N	N
	37°49'24" 122°27'12"	04/29/80	1901	31.1	Transect 2, 2nd	56		P	Y	N	N
	37°49'18" 122°28'18"	06/18/80	2056	93.3	Transect 2, 3rd	160		P	Y	N	N
	37°49'00" 122°28'30"	06/25/80	2037	102.5	Transect 2, 4th	269		P	Y	N	N
TS 1	37°49'24" 122°26'30"	F 09/03/80	1834	25.1	25-Hour Time Series	F 272		P	Y	N	N
	37°49'24" 122°26'30"	L 09/04/80	1926	25.1	25-Hour Time Series	L 322		P	Y	Y	N
ST 1	37°49'18" 122°28'30"	10/21/80	2310	117.3	Transect 2, 5th	480	117.1	P	Y	Y	N
	37°49'06" 122°28'24"	10/29/80	2039	123.0	Transect 2, 6th	538	122.2	P	Y	Y	N

* F refers to first cast of a time series
L refers to last cast of a time series

** Transect 2, 1st: i.e., the first time that Transect 2 was run

Table 11. Continued

Station Number	OBSERVATION INFORMATION							PROCESSING INFORMATION			
	Latitude (N) Longitude (W)	Date*	Time (UTC)	Water Depth (Meters)	Transect,** Single Station, or 25-Hour Time Series	Cast Number*	Bottom Data Depth (Meters)	P=Plessey M=Martek	Analog Trace Y=Yes N=No	Computer Tape Y or N	In Situ Data Sheet Y or N
ST2	37°48'30" 122°31'30"	04/25/80	0005	20.1	Transect 1, 1st	48		P	Y	N	N
	37°48'42" 122°28'30"	04/29/80	1833	40.3	Transect 1, 2nd	55		P	Y	N	N
	37°48'42" 122°31'36"	06/18/80	2024	27.5	Transect 1, 3rd	159		P	Y	N	N
	37°48'36" 122°31'18"	06/25/80	1952	52.2	Transect 1, 4th	266		P	Y	N	N
	37°48'24" 122°31'36"	10/21/80	2230	66.5	Transect 1, 5th	479	66.1	P	Y	Y	N
	37°48'36" 122°31'24"	10/29/80	2014	66.0	Transect 1, 6th	537	65.1	P	Y	Y	N
ST 3	37°47'36" 122°35'31"	04/24/80	2243	28.9	Transect 1 and 2, 1st	45		P	Y	N	N
	37°48'00" 122°30'54"	04/24/80	2350	22.0	Transect 1 and 2, 2nd	47		P	Y	N	N
	37°47'30" 122°35'12"	04/29/80	1717	47.6	Transect 1 and 2, 3rd	52		P	Y	N	N
	37°48'06" 122°30'54"	04/29/80	1816	34.8	Transect 1 and 2, 4th	54		P	Y	N	N
	37°47'36" 122°35'36"	06/18/80	1904	16.5	Transect 1 and 2, 5th	156		P	Y	N	N

Table 11. Continued

Station Number	OBSERVATION INFORMATION							PROCESSING INFORMATION			
	Latitude (N) Longitude (W)	Date*	Time (UTC)	Water Depth (Meters)	Transect,** Single Station, or 25-Hour Time Series	Cast Number*	Bottom Data Depth (Meters)	P=Plessey M=Martek	Analog Trace Y=Yes N=No	Computer Tape Y or N	In Situ Data Sheet Y or N
	37°48'06" 122°31'12"	06/18/80	2010	34.8	Transect 1 and 2, 6th	158		P	Y	N	N
	37°47'00" 122°35'42"	06/25/80	1902	15.9	Transect 1 and 2, 7th	265		P	Y	N	N
	37°48'00" 122°31'06"	06/25/80	2005	40.3	Transect 1 and 2, 8th	267		P	Y	N	N
	37°47'12" 122°35'24"	10/21/80	2038	18.5	Transect 1 and 2, 9th	476	18.4	P	Y	Y	N
	37°48'00" 122°31'24"	10/21/80	2209	48.5	Transect 1 and 2, 10th	478	48.2	P	Y	Y	N
	37°42'12" 122°35'18"	10/29/80	1901	26.5	Transect 1 and 2, 11th	534	26.2	P	Y	Y	N
	37°48'06" 122°31'06"	10/29/80	2002	57.2	Transect 1 and 2, 12th	536	57.0	P	Y	Y	N
ST 4	37°47'38" 122°30'44"	04/24/80	2337	22.0	Transect 1, 1st	46		P	Y	N	N
	37°48'54" 122°30'36"	04/29/80	1753	47.6	Transect 1, 2nd	53		P	Y	N	N
	37°47'54" 122°30'48"	06/18/80	1941	45.4	Transect 1, 3rd	157		P	Y	N	N
	37°47'42" 122°30'36"	06/25/80	2015	50.0	Transect 1, 4th	268		P	Y	N	N
	37°47'48" 122°30'42"	10/21/80	2148	64.5	Transect 1, 5th	477	64.2	P	Y	Y	N
	37°47'42" 122°30'36"	10/29/80	1948	65.0	Transect 1, 6th	535	64.6	P	Y	Y	N

Table 11. Continued

Station Number	OBSERVATION INFORMATION							PROCESSING INFORMATION			
	Latitude (N) Longitude (W)	Date*	Time (UTC)	Water Depth (Meters)	Transect,** Single Station, or 25-Hour Time Series	Cast Number*	Bottom Data Depth (Meters)	P=Plessey M=Martek	Analog Trace Y=Yes N=No	Computer Tape Y or N	In Situ Data Sheet Y or N
ST 5A	37°50'41" 122°25'11"	04/25/80	0052	18.3	Transect 2, 1st	50		P	Y	N	N
	37°50'42" 122°25'12"	04/29/80	1925	40.3	Transect 2, 2nd	57		P	Y	N	N
	37°50'54" 122°25'30"	06/18/80	2131	29.3	Transect 2, 3rd	161		P	Y	N	N
	37°50'42" 122°25'30"	06/25/80	2105	22.9	Transect 2, 4th	270		P	Y	N	N
	37°50'42" 122°25'24"	10/21/80	2352	29.5	Transect 2, 5th	481	29.1	P	Y	Y	N
	37°51'42" 122°25'30"	10/29/80	2104	46.0	Transect 2, 6th	539	45.8	P	Y	Y	N
TS 6	37°47'30" 122°22'30"	F 04/29/80	2033	20.5	25-Hour Time Series	F 59		P	Y	N	N
	37°47'30" 122°22'30"	L 04/30/80	2130	20.5	25-Hour Time Series	L 103		P	Y	N	N
	37°46'54" 122°22'12"	F 06/18/80	2243	20.7	25-Hour Time Series	F 163		P	Y	N	N
	37°46'54" 122°22'12"	L 06/19/80	2328	20.7	25-Hour Time Series	L 213		P	Y	N	N

Table 11. Continued

Station Number	OBSERVATION INFORMATION							PROCESSING INFORMATION			
	Latitude (N) Longitude (W)	Date*	Time (UTC)	Water Depth (Meters)	Transect,** Single Station, or 25-Hour Time Series	Cast Number*	Bottom Data Depth (Meters)	P=Plessey M=Martek	Analog Trace Y=Yes N=No	Computer Tape Y or N	In Situ Data Sheet Y or N
ST 15	37°51'36" 122°17'24"	04/25/80	0110	6.0	Transect 2, 1st	51		P	Y	N	N
	37°51'18" 122°24'06"	04/29/80	1944	15.6	Transect 2, 2nd	58		P	Y	N	N
	37°51'48" 122°23'48"	06/18/80	2151	14.8	Transect 2, 3rd	162		P	Y	N	N
	37°51'36" 122°23'30"	06/25/80	2127	13.7	Transect 2, 4th	271		P	Y	N	N
	37°51'30" 122°23'30"	10/22/80	0018	15.8	Transect 2, 5th	482	15.6	P	Y	Y	N
	37°51'42" 122°23'42"	10/29/80	2124	22.5	Transect 2, 6th	540	22.1	P	Y	Y	N
TS 18	37°58'24" 122°26'30"	F 04/30/80	2310	21.2	25-Hour Time Series	F 104		P	Y	N	N
	37°58'24" 122°26'30"	L 05/02/80	0010	21.2	25-Hour Time Series	L 155		P	Y	N	N
	37°59'00" 122°26'06"	F 09/11/80	0001	30.0	25-Hour Time Series	F 374	26.0 (min)	P	Y	Y	N
	37°59'00" 122°26'06"	L 09/12/80	0055	30.0	25-Hour Time Series	L 424	43.5 (max)	P	Y	Y	N
	37°58'30" 122°26'26"	F 10/20/80	1739	22.5	25-Hour Time Series	F 425	6.5 (min)	P	Y	Y	N
	37°58'30" 122°26'26"	L 10/21/80	1831	22.5	25-Hour Time Series	L 475	46.8 (max)	P	Y	Y	N

Table 11. Continued

Station Number	OBSERVATION INFORMATION							PROCESSING INFORMATION			
	Latitude (N) Longitude (W)	Date*	Time (UTC)	Water Depth (Meters)	Transect,** Single Station, or 25-Hour Time Series	Cast Number*	Bottom Data Depth (Meters)	P=Plessey M=Martek	Analog Trace Y=Yes N=No	Computer Tape Y or N	In Situ Data Sheet Y or N
TS 24	38°03'36" 122°12'48"	F 09/09/80	2014	17.9	25-Hour Time Series	F 323		P	Y	N	N
	38°03'36" 122°12'48"	L 09/10/80	2058	17.9	25-Hour Time Series	L 373		P	Y	N	N
	38°03'42" 122°12'48"	F 10/22/80	1930	19.6	25-Hour Time Series	F 483	12.4 (min)	P	Y	Y	N
	38°03'42" 122°12'48"	L 10/23/80	2030	19.6	25-Hour Time Series	L 533	32.9 (max)	P	Y	Y	N
TS 312	37°35'36" 122°15'18"	F 06/23/80	2240	16.8	25-Hour Time Series	F 214		P	Y	N	N
	37°35'36" 122°15'18"	L 06/24/80	2325	16.8	25-Hour Time Series	L 264		P	Y	N	N

Table 12. Manufacturer's Specifications for Martek, Model TDC, In Situ Metering System

Manufacturer: Martek, Model TDC

Parameters Measured: Conductivity, Temperature, and Depth

Parameter	Range	Accuracy
Conductivity	Variable 0-100, 50, 25, 10, 5 2.5 mmhos/cm	+1-2% full scale +0.5°C
Temperature	0°C to 40°C	+2% full scale on 0-100 m
Depth	0-100, 30 m	+4% full scale on 0-30 m

Recorder: Read-out module

Record Format: Digitized

Sampling Interval: 0-15.2 m @ 1.5 m increments

Processing: Visual

Mode of Operation: Probe is lowered to a discrete depth, then module is read and value is recorded for each parameter.

Table 13. Manufacturer's Specifications for Plessey, Model 9041 CTD Profiling System

Manufacturer: Plessey (Grundy) CTD Profiling System

Parameters Measured: Conductivity, Temperature, and Depth

Parameter	Range	Precision
Depth	0 to 1500, 0 to 3000 or 0 to 6000 m	± 0.04% of full scale
Conductivity	10 to 60 mmho/cm	± 0.005 mmho/cm
Temperature	-2° to 35°C	± 0.005°C
Output Signal:	Multiplexed fm signal of sensor frequency analogs at approximately 2.4 v p-p.	
Weight:	In air: 105 lb (47.6 Kg) In water: 81 lb (36.7 Kg)	

within a few meters of the bottom. Conductivity and temperature data were recorded in analog plot form on a $X_1/X_2/Y$ recorder and in digital form on tape utilizing a digital data logger. The digitized data were processed with a series of software programs which show the data structure on the tape, converts the data to engineering units, deletes redundant data, allows the processor to insert header information and other meteorological information, and finally converts the data into the NODC format.

CTD calibrations for the Plessey 9041 were obtained by placing a Nansen Bottle above the CTD sensor and tripping it at a depth where the analog trace indicated approximately constant values of conductivity and temperature. Each bottle was allowed 5 minutes to reach equilibrium. Nansen samples were measured using calibrated reversing thermometers.

5.0. SALINITY, TEMPERATURE, AND WATER QUALITY DATA ACQUIRED BY USGS

5.1. Locations of Stations and Relevant Information

As part of the U.S. Geological Survey's on-going interdisciplinary study of the San Francisco Bay estuary, a system of water sampling stations was established. Table 14 lists the series of stations that are shown graphically in figure 13. The main channel stations were sampled from the R/V POLARIS and were of two types. The first were longitudinal or surface sampling stations, and the second were vertical sampling stations. Station positions were determined using radar and visual sightings of local landmarks and navigational aids and are reported to the nearest ± 0.1 km.

During 1979 and 1980, cruises were conducted (table 15), and the following variables were sampled: salinity, temperature, dissolved oxygen, carbon dioxide, pH, abundance of plant nutrients; and the abundance, size, and composition of suspended and sedimental particulate matter (table 16). In addition to the sampling conducted by the R/V POLARIS at the channel stations described above, shoal stations were sampled by two small vessels. Only the temperature and salinity measurements from the channel stations are described in this report. For further information concerning other variables sampled, see Alpine et al., 1981.

5.2. Instrumentation and Processing

The surface stations were sampled while the R/V POLARIS was underway utilizing a through-hull bow sampling system, which supplied continuous water flow to all applicable analyzing equipment. Vertical stations were sampled while at anchor with a submersible pump. These stations were sampled at three to six positions in the water column, normally 0, 2, 5, 10, 15, and 20 meters, depending on water depth.

Temperature was measured by thermistor probes at the intake of the continuous sample pump (surface profiling) or at the intake of the submersible pump. Probes were calibrated before and after cruises at 0°C and 20°C. Precision of measurements was ± 0.1°C and accuracy was ± 0.2°C (Dedini et al., 1982).

Table 14. USGS Long Term Sample Stations in the Channel of San Francisco Bay

Station Number	Name	N. Latitude	W. Longitude
North Bay			
1	Winter Island	38°02'24"	121°50'24"
2	Chain Island	38°03'48"	121°51'18"
3	Pittsburg	38°03'00"	121°52'42"
4	Simmons Point	38°02'54"	121°56'06"
5	Middle Ground	38°03'36"	121°58'48"
6	Roe Island	38°03'54"	122°02'06"
7	Avon Pier	38°02'54"	122°05'48"
8	Martinez	38°01'48"	122°09'06"
9	Benicia	38°03'00"	122°10'24"
10	Crockett	38°03'36"	122°12'30"
11	Mare Island	38°03'42"	122°15'48"
12	Hercules	38°03'06"	122°18'42"
13	N. or Pinole Point	38°01'54"	122°21'54"
14	W. of Pinole Point	38°00'30"	122°24'06"
15	Point San Pablo	37°58'12"	122°26'12"
16	Red Rock	37°54'54"	122°27'00"
17	Raccoon Str.	37°52'54"	122°25'36"
18	Berkeley Pier	37°51'06"	122°23'48"
19	Golden Gate	37°49'06"	122°28'18"
911	Light Ship	37°45'00"	122°41'30"
South Bay			
20	Blossom Rock	37°49'00"	122°24'18"
21	Bay Bridge	37°48'00"	122°22'12"
22	Potrero Point	37°45'42"	122°21'30"
23	Hunters Point	37°43'36"	122°20'12"
24	Candlestick Point	37°42'00"	122°20'18"
25	Oyster Point	37°40'18"	122°19'30"
26	San Bruno Shoal	37°38'12"	122°19'00"
27	San Francisco Airport	37°37'06"	122°17'30"
28	N. San Mateo Br.	37°36'00"	122°16'12"
29	S. San Mateo Br.	37°34'54"	122°14'48"
30	Redwood Cr.	37°33'18"	122°11'30"
31	Coyote Hills	37°31'48"	122°09'24"
32	Ravenswood Point	37°31'06"	122°08'06"
33	Dunbarton Bridge	37°30'36"	122°07'24"
34	Newark Slough	37°29'36"	122°05'18"
35	Palo Alto	37°28'54"	122°04'42"
36	Calaveras Point	37°28'18"	122°03'48"

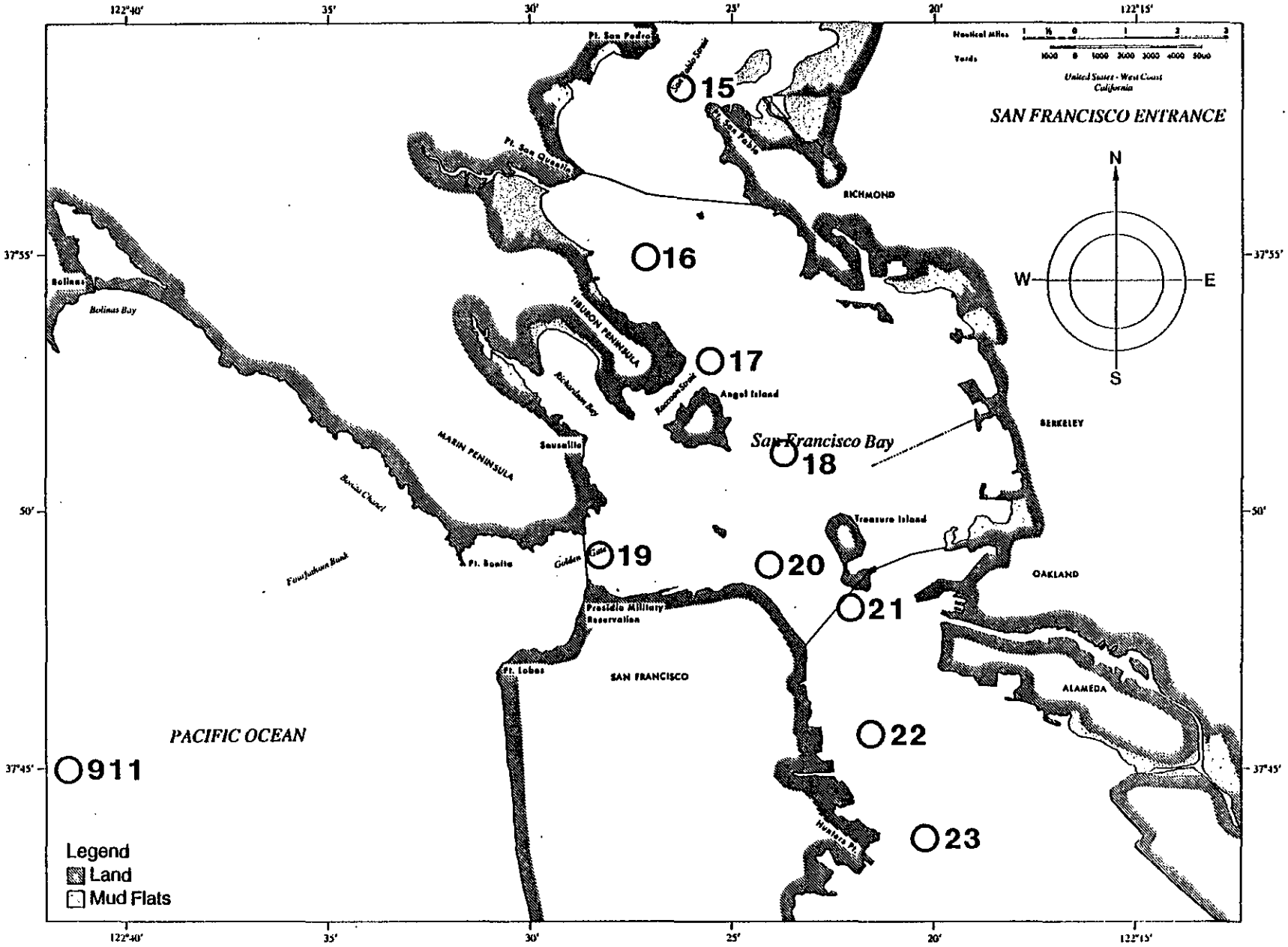

Figure 13a. USGS Long-Term Water Sampling Station Locations

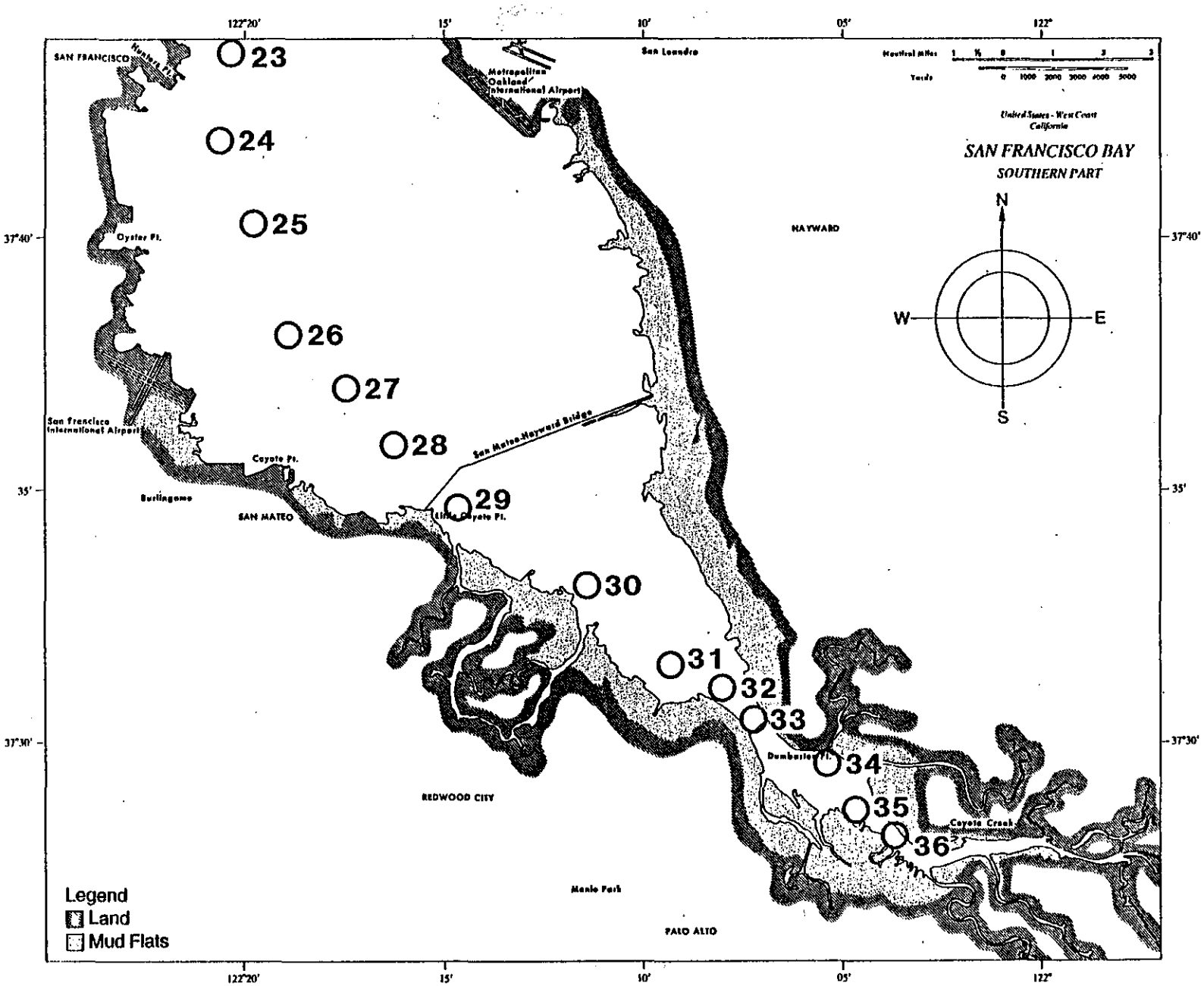

Figure 13b. USGS Long-Term Water Sampling Station Locations

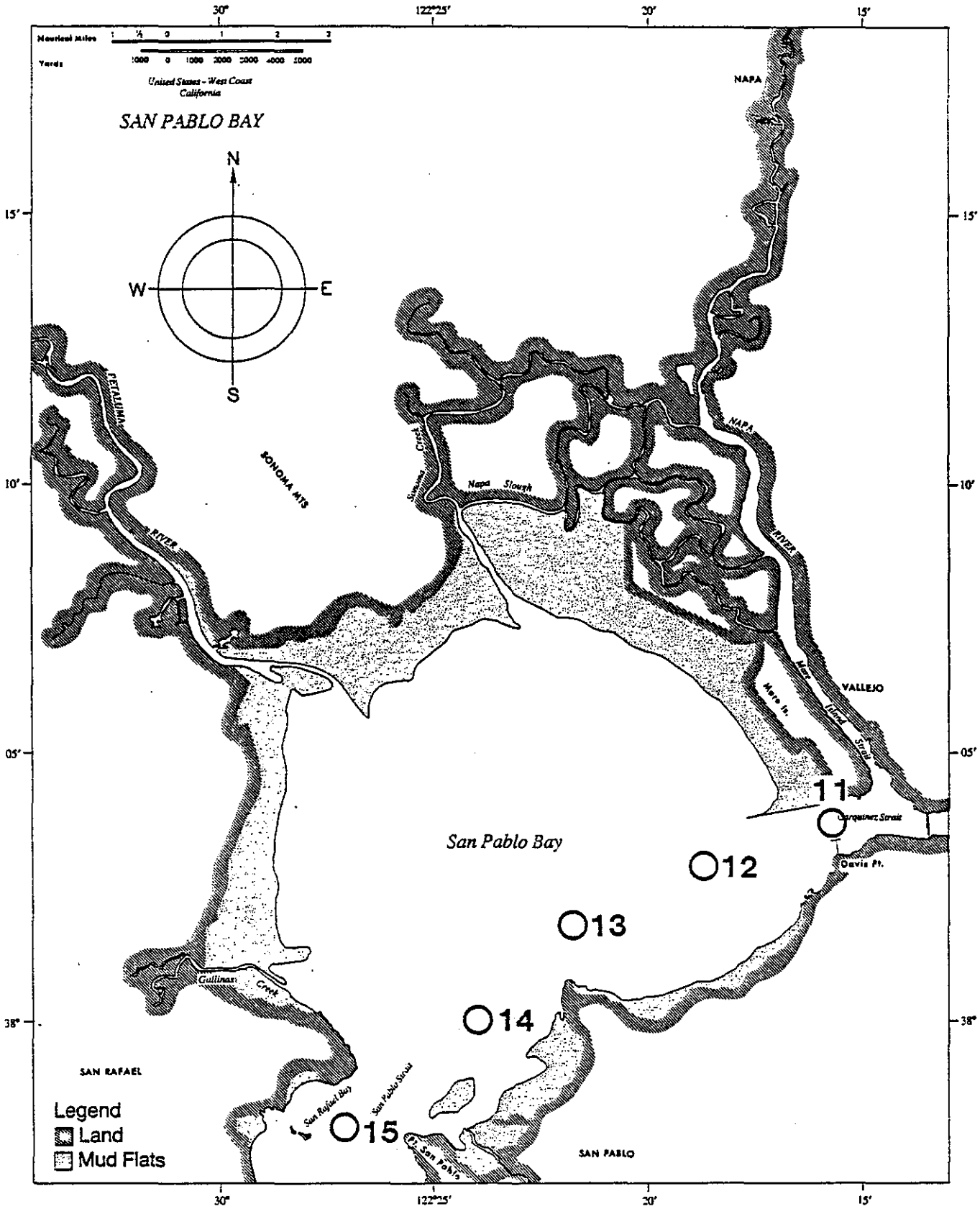

Figure 13c. USGS Long-Term Water Sampling Station Locations

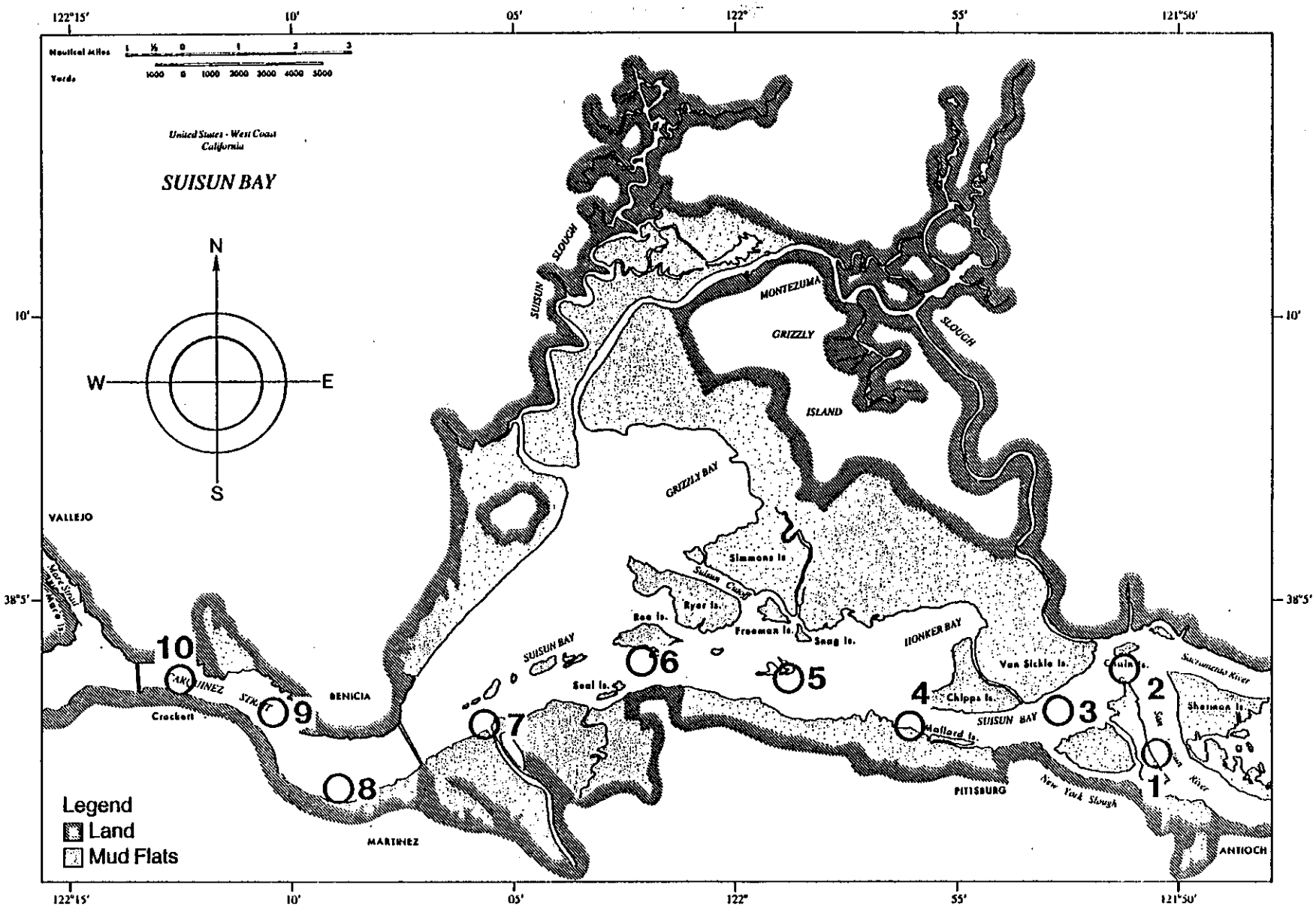

Figure 13d. USGS Long-Term Water Sampling Station Locations

Table 15. USGS San Francisco Bay Cruise Dates

	Date	Location	Stations Occupied	Vertical Stations
1979	January 15	South Bay	36-19	36,32,30,27,24,21
		North Bay	17-4	--
	January 16	North Bay	3-19	3,6,9,12,15,17,19
	Feburary 13	South Bay	36-19	36,32,30,27,24,21
		North Bay	17-4	--
	February 14	North Bay	3-19	3,6,9,12,15,17,19
		South Bay	20--30	--
	March 5	South Bay	36-19	36,32,30,27,24,21,19
		North Bay	17-4	--
	March 6	North Bay	3-17	3,6,9,12,15,17
		South Bay	20-30	--
	April 2	South Bay	36-19	36,32,30,27,24,21,19
		North Bay	18-3	--
	April 3	North Bay	3-17	3,6,9,12,15,17
		South Bay	18-30	--
	May 8	South Bay	36-19	36,32,30,27,24,21,19
		North Bay	17-4	--
	May 9	North Bay	36-19	3,6,9,12,15,17,19
		South Bay	20-30	--
	June 4	South Bay	36-19	36,32,30,27,24,21,19
		North Bay	17-6	--
	June 5	North Bay	2-19	3,6,9,12,15,17,19
		South Bay	20-30	--
	July 9	South Bay	36-19	36,32,30,27,24,21,19
		North Bay	17-4	--
	July 10	North Bay	2-19	3,6,9,12,15,17,19
		South Bay	20-29	--
	August 13	South Bay	32-19	32,30,27,24,21,19
		North Bay	17-2	--
	August 14	North Bay	2-19	3,6,9,12,15,17,19
		South Bay	20-30	--

Table 15. Continued

	Date	Location	Stations Occupied	Vertical Stations
1979	August 17	South Bay	36-30	--
	September 14	South Bay	30-23	--
	September 17	South Bay North Bay	36-19 17-4	36,32,30,27,24,21,19 --
	September 18	North Bay South Bay	3-19 20-30	3,6,9,12,15,17,19 --
	October 15	South Bay North Bay	36-19 17-4	36,32,27,24,21,19 --
	October 16	North Bay South Bay	2-18 20-30	3,6,9,12,15,17 --
	November 13	South Bay North Bay	36-19 17-4	36,32,30,27,24,21,19 --
	November 15	North Bay	3-17	3,6,9,12,15,17
	December 5	South Bay North Bay	36-19 18-4	36,32,30,27,24,21,19 --
	December 7	North Bay	4-17	6,9,12,15,17
1980	January 8	South Bay	36-19	36,32,30,27,24,21,19
	January 9	North Bay	17-3	17,15,13,9,6,3
	Janaury 23	South Bay	36-19	36,32,30,27,24,21,19
	January 24	North Bay	9-29	19,17,15,13,9
	February 6	North Bay	19-4	19,17,15,13,9,6,4
	February 20	South Bay	32-36	36,32
	February 20	South Bay	28-30	--
	February 27	South Bay	24-30	30
	March 4	South Bay	36-19	36,32,30,27,24,21
	March 5	North Bay	19-3	17,15,13,9,3
	March 18	South Bay	36-19	36,32,30,27,24,21,19

Table 15. Continued

	Date	Location	Stations Occupied	Vertical Stations
1980	March 19	North Bay	19-3	19,17,15,13,9,6,3
	April 8	South Bay	36-19	36,32,30,27,24,21,19
	April 9	North Bay	19-3	17,15,13,9,6,3
	April 22	South Bay	36-19	36,32,30,27,24,21,19
	April 23	North Bay	19-3	19,17,15,13,9,6,3
	May 7	South Bay	36-19	36,32,30,27,24,21,19
	May 8	North Bay	19-2	17,15,13,9,6,3
	May 21	South Bay	36-19	36,32,30,27,24,21
	May 22	North Bay	19-2	19,17,15,13,9,6,3
	June 4	South Bay	36-19	36,32,30,28,27,24,21,19
	June 5	North Bay	17-2	17,15,13,9,6,3
	June 17	South Bay	36-19	36,32,30,27,24,21,19
	June 18	North Bay	17-3	17,15,13,9,6,3
	July 1	South/North Bay	36-8	36,32,30,27,24,21
	July 2	North Bay	19-2	19,17,15,13,9,6,3
	July 16	South Bay	36-19	36,32,30,27,24,21,19
	July 17	North Bay	17-2	17,15,13,9,6,3
	August 4	South/North Bay	36-5	36,32,30,27,24,21
	August 5	South/North Bay	23-3	17,15,13,9,6,3
	August 18	South Bay	36-19	36,32,30,27,24,21,19
	August 19	North Bay	17-2	17,15,13,9,6,3
	September 3	South Bay	36-19	36,32,30,27,24,21,19
	September 4	North Bay	17-2	17,15,13,9,6,3
	September 16	South Bay	36-19	36,32,30,27,24,21,19

Table 15. Continued

	Date	Location	Stations Occupied	Vertical Stations
1980	September 17	North Bay	17-2	17,15,13,9,6,3
	October 15	South Bay	36-19	36,32,30,27,24,19
	October 16	North Bay	17-2	17,15,13,9,6,3
	October 28	South Bay	33-19	32,30,27,24,21,19
	October 29	North Bay	17-2	17,15,13,9,6,3
	November 12	South Bay	36-19	36,32,30,27,24,21,19
	November 13	North Bay	17-2	17,15,13,9,6,3
	December 16	South Bay	36-19	36,32,30,27,24,21,19
	December 17	North Bay	17-2	17,15,13,9,6,3

Table 16. Summary of Analytical Methods for USGS Cruise Data

Variable (ABBREVIATION)	Primary Reference or Manufacturer of Instrument	Units	Precision(*)
Time		local	min
Station (STA)			
Position UTM-N & UTM-E		UTM	0.2 km
Depth	Schemel and Dedini (1979)	meters	0.2
Temperature (TEMP)	Schemel and Dedini (1979)	deg C	0.1
Salinity (SALIN)	Dedini et al. (1982)	ppt	0.05
Light transmission (TRANS)	Hydroproducts Corp.		5 units (day to day) 10 units (bet. cruises)
Dissolved oxygen (DIS OXY)	Carpenter (1965)	μg-at/L	4
Silicate (Si02)	Technicon Corporation (1976)	μM/L	3 percent over range 20 to 300 M/L
Orthophosphate (PO4)	Atlas et al. (1971)	μM/L	3 percent over range 2 to 50 M/L
Nitrate + nitrite (N03+N02)	Technicon Corporation (1973)	μM/L	3 percent over range 1 to 80 M/L
Nitrite (N02)	Technicon Corporation (1973)	μM/L	3 percent over range
Ammonia (NH3)	Solorzano (1969)	μM/L	3 percent over range 3 to 100 M/L
Turbidity (TURB)	G. K. Turner Associates		5 percent
Chlorophyll-a fluorescence (FLUOR)	G. K. Turner Associates		5 percent
Extinction coefficient (EXT COEFF)	LiCor Corporation	1/m	

(*) Where possible estimates of precision are based on splits of discrete samples.

Table 16. Continued

Variable (ABBREVIATION)	Primary Reference or Manufacturer of Instrument	Units	Precision(*)
Particulate organic carbon (POC)	Menzel and Vaccaro (1964)	M/L	10 percent over range 5 to 250 M/L
Discrete chlorophyll-a (DIS CHL)	Strickland and Parsons (1972)	g/L	10 percent
Alkalinity (ALKALIN)	Culberson and Pytkowicz (1969)	meq/L	0.02
pH	Strickland and Parsons		0.005 units
pC02	Gordon and Park (1972)	ppt	5 percent
Total C02	Oceanography International Corp.		1 percent
Suspended particulate matter (SPM)	Harmon et al. (1983)	mg/L	10 percent

(*) Where possible estimates of precision are based on splits of discrete samples.

Salinity was measured with electrodeless-induction salinometers with flow through sample cells. Calibration was accomplished using a Beckman salinometer calibrated with Copenhagen water and the analysis of six to twelve discrete bottle samples. The samples were collected during each water sampling cruise and covered the encountered salinity range. Shipboard salinity values were corrected when differences of more than 0.05 ppt were consistently observed; most values agreed to within 0.05 ppt (Dedini et al., 1982).

6.0. METEOROLOGICAL DATA ACQUIRED BY NOAA/NOS AND USGS

6.1. Locations of Meteorological Stations and Relevant Information

Meteorological data are essential for understanding the total circulation within an estuary (section 1.0.). Wind stress can have a greater effect on currents than tidal and density forces over varying geographic regions. Barometric pressure data are required to correlate variations with extreme meteorological events.

During the period of the San Francisco Bay Area Circulation Survey, the USGS established four remote meteorological station locations in addition to the three station locations maintained by NOAA/NOS. The NOS stations were located in San Francisco Bay proper and the USGS stations were located in South San Francisco Bay, San Pablo Bay, and Suisun Bay (figure 3). The NOS stations recorded average wind speed, direction, temperature, and atmospheric pressure. In addition to the NOS station parameters, the USGS stations also recorded maximum wind speed, visible radiation, and solar radiation. The USGS is using the meteorological data in conjunction with the water-sampling data (section 5.0.) to support ongoing physical, chemical, and biological studies in the estuary. Table 17 contains the following information for the meteorological data collected during this survey: circulation station number, geographic coordinates, dates and duration of observation, samples per hour, and days of good data for each parameter measured.

6.2. Instrumentation and Processing

The meteorological data were collected by self-contained Aanderaa weather stations, which consist of a six-channel data logger (12-channel for USGS stations) and a program wiring board housed in a base cabinet. Wind speed and direction sensors were mounted at 10 m above mean sea level, radiation and temperature sensors on mast arms below that, and the pressure sensor within the base housing.

All sensors transmit analog signals to the data logger via the programming board. The Aanderaa data logger, which is powered by an internal 9-volt battery, digitizes the analog signals to 10-bit binary words and stores them

Table 17. Meteorological Stations Occupied During the San Francisco Bay Area Circulation Survey

Station No.	OBSERVATION INFORMATION				SENSORS IN OPERATION DAYS OF GOOD DATA					
	Latitude (N) Longitude (W)	Dates of Observation	Days of Data	Samples Per Hour	Speed	Direction	Temperature	Pressure	Visible Radiation	Total Radiation
W1	37°51'10" 122°25'03"	02/07/79-05/05/79	87	6	57	57	57	57	0	0
W2	37°47'30" 122°28'53"	09/20/79-01/23/80	125	6	37	37	37	37	0	0
		04/12/80-12/03/80	235	6	203	203	203	203	0	0
W3	37°50'53" 122°21'35"	09/14/79-11/19/79	66	6	0	0	0	0	0	0
		11/19/79-04/29/80	161	3	161	161	161	161	0	0
		04/29/80-12/06/80	221	6	133	133	133	133	0	0
W4	37°41'44" 122°17'46"	11/19/79-06/23/80	217	3	130	130	130	0	119	119
W5	37°41'00" 122°09'35"	06/24/80-07/23/81	394	3	218	393	387	366	248	265
W6	38°02'40" 122°25'54"	12/06/79-12/18/80	373	3	291	324	324	118	225	225
W7	38°04'10" 122°00'40"	11/14/79-09/24/81	680	3	624	624	624	360	505	576

on 6.4-mm reel-to-reel magnetic tape. Additional batteries have been provided via connector ports on the programming board to insure proper operation of the data logger for longer operating periods. The first channel of the data logger is reserved for the reference number of the data logger, the second for the sequential data block number (not required), and the remaining channels are available for data input. The data loggers are programmed by internal quartz-crystal clocks at selectable sampling intervals.

The wind speed sensor is a three-cup anemometer which measures averaged and maximum wind speed. The direction sensor consists of a vane which is coupled to a compass with a potentiometer ring in the sensor housing. At the time of recording, the compass is clamped and the direction reading is recorded as the potentiometer setting. The temperature sensor is a platinum thermal resistor of 500 ohms, and the barometric pressure sensor is an aneroid barometer.

A Kipp and Zonen CM-5 solarimeter capable of sensing radiation in the range of 0.3 to 2.5 μm sends its signal to a millivolt integrator, which accumulates the outputs from the solarimeter and produces a time integrated signal in the range of 0 to 5 volts. At the same time as the output from the millivolt integrator is recorded by the data logger, the time integrator is reset. A radiation sensor for the visible light range operates in the same manner. A LI-COR LI-192S quantum sensor, which is capable of detecting radiation for wave lengths between 0.4 and 0.7 μm, is used with a second millivolt integrator. The accuracies of the meteorological sensors are listed in table 18.

For compatibility, meteorological data tapes generated at the USGS meteorological stations were copied and provided to NOS for data reduction using existing programs. The software which was used by NOS to process the Aanderaa meteorological data is the same as that used to process the Aanderaa RCM4 current data described in section 2.3.

Using the original meteorological instrument tapes, the USGS reduced the data for use by the USGS estuarine research group by interfacing an audio reel-to-reel tape recorder and a parallel interface circuit (supplied by

Table 18. Manufacturer's Specifications for Aanderaa Meteorological System

Weight

Recording unit: 4 kg

Dimensions

Recording unit length: 38 cm
Recording unit diameter: 14 cm
Housing: 1 m x 25 cm x 25 cm
Wind sensors at 10 m above water.

Materials

Data logger: PVC plastic, nickel plated bronze, acrylic.
Mast and housing: aluminum

Measuring Ranges and Accuracies

Wind speed: threshold 30-50 cm/sec ±2% of full scale.
Direction: 0-360° ±5° magnetic
Temperature: -44.05-44.09°C ±0.25°C
Pressure: 720-1070 mbar ±0.67% of full scale.
Visible Radiation: 0.4-0.7 μm ±16% (worst case); ±7.6% (typical total)
Total Radiation: 0.3-2.5 μm

Measuring System

Rotary encoder system with sequential measuring of 12 channels by self-balancing bridge. Bridge is balanced in ten binary steps and gives a 10-bit binary word for each channel.
Measuring speed: 4.0 sec/channel
The channels are: Reference, Block Number, Average Speed, Maximum Speed, Direction, Temperature, Pressure, Visible Irradiation, Total Irradiation Spare, Spare, Spare

Recording System

Serial recording of 10-bit binary words on 0.6 cm magnetic tape by use of short and long pulses.
Total storage capacity: 5,000 samplings
Tape: 183 m on 7.6 cm spool

Clock

Accuracy: ±2 sec/day over temperature range 0-20°C.

Sampling Intervals

180, 60, 30, 20, 15, 10, 5, 2.5, 1, and 0.5 min according to interval selected.

External Triggering

Is possible by applying a 6 volt positive pulse to programming board.

Batteries

Main battery: Tudor 9T1 or similar battery (9 volt battery 63 x 50 x 80 mm, nonmagnetic).

Aanderaa) with a microcomputer system. There were no record or block marks on the original data tape; therefore, the tape transcription had to be done in a continuous operation. To meet this requirement, the raw data tape was replayed on the audio recorder and the output sent through the interface to the microcomputer without interruption. The computer formatted the data words and wrote the data into the first-in first-out (FIFO) buffer memory of a 9-track computer tape drive before finally writing the information on a 9-track computer tape. The buffer memory of the computer tape drive was essential in accomplishing the uninterrupted tape translation. Once the data became available in a computer retrievable format; editing, averaging, and plotting of the time series were carried out in a routine manner. This included verification of recording timing, and an inspection for erroneous readings. Data records were then combined and edited so that the data for each station were kept in monthly files. Known bad readings and data gaps were replaced by dummy readings of 999 for easy identification in subsequent steps. Finally, the data were converted to appropriate engineering units based on the calibration constants furnished by the manufacturer for each sensor.

Throughout the study period, all data loggers were set at a sampling rate of three or six observations per hour. The time series data sets include time averaged wind speed and solar radiation; instantaneous readings of wind direction, air temperature, and barometric pressure; and the maximum wind speed during the sampling period.

7.0. HISTORICAL DATA

7.1. Introduction

The National Ocean Service, formerly the U.S. Coast and Geodetic Survey, created in 1807, has been responsible for the acquisition of current, tide, temperature, and salinity data for almost 180 years. This section will include those data that have been collected for the San Francisco Bay area during the history of NOS. As discussed in section 1.1., there has been a significant amount of sedimentation, land reclamation, and dredging in the Bay since 1850, which has resulted in substantial physical changes. The historical tide and current data are extremely valuable in that they show how the water properties have changed as a result of the changing coastline and Bay bathymetry. In comparing the historical data to present data, one must consider the constantly improving state of the art of data acquisition and analysis over the past 100 years. Details concerning these historical data are presented throughout the remainder of this section.

Of significant importance are the historical tidal measurements in the Golden Gate. The leveling connections among the bench marks of the tide stations at Fort Point, Sausalito, and the Presidio, between 1854 and the present, provide a continuous set of tidal measurements at the Golden Gate area (Smith, 1980). This is the only location in the United States with over 100 years of continuous tidal measurements, making the data set important for global sea level analysis, variability of water level relative to land over long periods, and historical tidal boundary determination.

7.2. Current Data

The NOS historical current station locations are presented in table 19. The following pertinent information concerning those stations is as follows: geographic coordinates, dates of observation and days of data, depths of measurements below the surface, instrumentation, samples per hour, and Commanding Officer of the ship. The data taken from the 277 stations between the years 1856 and 1930 are not summarized in this report but are available on request; these data were generally less than 5 days duration and were measured with Price current meters and current poles.

Table 19. NOS Historical Current Stations Occupied in the San Francisco Bay Area

OBSERVATION INFORMATION								
Reference No.	Latitude (N) Longitude (W)	Dates of Observation	Days of Data	Station Number	Depths of Measurements Below Surface (Meters)	Method of Measurement	Samples Per Hour	Commanding Officer of Ship
1	37°51'24" 122°23'06"	02/08/54-02/12/54	4.1	C106	2.4, 3.4, 4.3	RRCM	2	Latham
2	37°50'24" 122°24'24"	02/08/54-02/12/54	4.1	C107	2.4, 12.2, 22.0	RRCM	2	Latham
3	38°03'48" 122°15'30"	01/04/54-01/09/54	5.1	C96	2.4, 6.4, 10.4	RRCM	2	Latham
4	38°03'48" 122°15'36"	01/25/54-01/30/54	4.3	C96A	2.4, 10.4, 18.6	RRCM	2	Latham
5	38°03'30" 122°15'18"	01/18/54-01/22/54	4.1	C97	2.4, 5.5, 8.8	RRCM	2	Latham
6	38°03'42" 122°12'42"	01/11/54-01/15/54	4.1	C98	2.4, 10.1, 18.0	RRCM	2	Latham
7	37°50'54" 122°24'18"	02/08/54-02/12/54	4.2	C105	2.4, 20.1, 37.5	RRCM	2	Latham
8	37°58'24" 122°26'42"	12/07/53-12/12/53	5.0	C85	2.4, 8.2, 14.6	RRCM	2	Latham
9	38°01'00" 122°22'12"	12/07/53-12/12/53	4.5	C86	2.1, 4.6	RRCM	2	Latham
10	38°01'48" 122°22'42"	11/30/53-12/04/53	4.1	C87	2.4, 6.1, 9.5	RRCM	2	Latham
11	38°02'06" 122°23'30"	11/16/53-11/20/53	4.0	C88	2.4, 4.9	RRCM	2	Latham
12	38°04'12" 122°25'12"	11/23/53-11/25/53	2.2	C89	1.2	RRCM	2	Latham
13	38°06'42" 122°29'48"	11/23/53-11/25/53	2.2	C90	1.8	RRCM	2	Latham

Table 19. Continued

OBSERVATION INFORMATION								
Reference No.	Latitude (N) Longitude (W)	Dates of Observation	Days of Data	Station Number	Depths of Measurements Below Surface (Meters)	Method of Measurement	Samples Per Hour	Commanding Officer of Ship
14	38°09'18" 122°24'24"	11/19/53-11/22/53	2.7	C91	1.8	RRCM	2	Latham
15	38°07'18" 122°16'42"	01/25/54-01/29/54	4.1	C93	2.1, 4.0	RRCM	2	Latham
16	38°04'48" 122°14'54"	01/04/54-01/09/54	5.0	C94	2.4, 4.6, 7.0	RRCM	2	Latham
17	37°44'36" 122°31'30"	08/10/53-08/18/53	7.6	C74	2.4, 5.8	RRCM	2	Latham
18	37°53'00" 122°26'06"	11/03/53-11/08/53	4.5	C75	2.4, 19.2	RRCM	2	Latham
19	37°53'30" 122°25'06"	10/05/53-10/10/53	4.7	C76	2.4, 6.4, 10.4	RRCM	2	Latham
20	37°54'18" 122°24'00"	09/28/53-10/03/53	3.7	C77	2.4, 4.0, 5.5	RRCM	2	Latham
21	37°54'42" 122°27'54"	10/12/53-10/15/53	2.8	C79	2.4, 4.6, 6.7	RRCM	2	Latham
22	37°57'12" 122°27'18"	10/05/53-10/10/53	4.8	C80	2.4, 4.9	RRCM	2	Latham
23	37°57'00" 122°26'24"	11/03/53-11/08/53 11/03/53-11/06/53	4.5 3.0	C81	2.4 9.2, 18.0	RRCM	2	Latham
24	37°56'54" 122°25'48"	10/12/53-10/17/53	5.0	C82	2.4, 7.0, 11.0	RRCM	2	Latham
25	37°58'12" 122°25'48"	11/16/53-11/20/53 11/18/53-11/20/53	4.1 2.2	C83	2.4, 8.2 14.3	RRCM	2	Latham
26	37°58'18" 122°26'12"	11/30/53-12/04/53	4.2	C84	2.4, 11.0, 19.5	RRCM	2	Latham

Table 19. Continued

OBSERVATION INFORMATION								
Reference No.	Latitude (N) Longitude (W)	Dates of Observation	Days of Data	Station Number	Depths of Measurements Below Surface (Meters)	Method of Measurement	Samples Per Hour	Commanding Officer of Ship
27	37°50'18" 122°28'00"	08/11/53-08/17/53	5.6	C56	2.4, 23.2	RRCM	2	Latham
28	37°50'06" 122°27'18"	03/06/52-03/10/52	4.2	C57	2.4, 16.2, 30.5	RRCM	2	Marshall
29	37°49'54" 122°26'36"	03/06/52-03/10/52	4.3	C58	2.4, 13.1, 24.4	RRCM	2	Marshall
30	37°49'18" 122°27'42"	03/20/52-04/24/52	34.1	C59	2.4, 25.9, 50.3	RRCM	2	Marshall
31	37°50'00" 122°22'54"	02/26/52-03/01/52	4.4	C45	2.4, 4.3, 6.7	RRCM	2	Marshall
32	37°52'18" 122°22'54"	04/11/52-04/13/52	2.2	C46	1.8	RRCM	2	Marshall
33	37°51'48" 122°24'06"	09/01/53-09/05/53	4.5	C47	2.4, 10.7, 18.3	RRCM	2	Latham
34	37°51'48" 122°24'48"	09/28/53-10/01/53	4.5	C48	2.4, 9.2, 12.2	RRCM	2	Latham
35	37°52'06" 122°26'24"	08/18/53-08/24/53	6.0	C49	2.4, 21.7	RRCM	2	Latham
36	37°44'24" 122°34'54"	07/27/54-08/07/54	10.2	C73	2.4, 5.5	RRCM	2	Latham
37	37°46'30" 122°33'48"	08/05/53-08/10/53	5.1	C72	2.4, 7.9	RRCM	2	Latham
38	37°46'36" 122°36'48"	07/13/53-07/21/53	7.8	C71	2.4, 6.4, 10.1	RRCM	2	Latham
39	37°50'06" 122°36'36"	07/07/53-07/13/53	5.8	C70	2.4, 8.2	RRCM	2	Latham

Table 19. Continued

OBSERVATION INFORMATION								
Reference No.	Latitude (N) Longitude (W)	Dates of Observation	Days of Data	Station Number	Depths of Measurements Below Surface (Meters)	Method of Measurement	Samples Per Hour	Commanding Officer of Ship
40	37°49'06" 122°32'18"	07/09/53-07/15/53	5.9	C68	2.4, 10.1, 17.7	RRCM	2	Latham
41	37°50'12" 122°33'36"	07/15/53-08/03/53	19.2	C69	2.4, 8.5, 14.9	RRCM	2	Latham
42	37°49'06" 122°29'42"	07/07/53-08/05/53	28.5	C61	4.6	RRCM	2	Latham
43	37°47'36" 122°30'48"	08/17/53-08/29/53	12.6	C64	2.4	RRCM	2	Latham
		08/17/53-08/26/53	8.9		15.6	RRCM	2	
44	37°48'12" 122°30'54"	08/10/53-08/17/53	6.8	C65	2.4, 13.7	RRCM	2	Latham
45	37°48'30" 122°31'30"	07/21/53-07/24/53	3.3	C66	2.4, 12.5, 25.6	RRCM	2	Latham
46	37°52'18" 122°26'18"	09/01/53-09/05/53	5.0	C50	2.4, 17.1	RRCM	2	Latham
		09/09/53-09/10/53	1.4		33.6	RRCM	2	
		09/28/53-10/03/53	5.8		32.0	RRCM	2	
47	37°52'24" 122°26'36"	10/05/53-10/08/53	3.1	C51	2.4	RRCM	2	Latham
		10/05/53-10/10/53	4.8		13.1	RRCM	2	
		10/12/53-10/17/53	5.1		2.4	RRCM	2	
48	37°51'30" 122°27'36"	03/07/52-03/10/52	3.2	C52	2.4, 19.8, 38.1	RRCM	2	Marshall
49	37°51'24" 122°28'12"	03/07/52-03/09/52	2.4	C53	1.8	RRCM	2	Marshall
50	37°51'06" 122°26'48"	08/24/53-08/29/53	5.5	C54	2.4, 7.3	RRCM	2	Latham
51	37°50'30" 122°27'06"	08/18/53-08/24/53	6.0	C55	2.4, 9.5	RRCM	2	Latham
		09/09/53-09/11/53	2.3		15.2	RRCM	2	

Table 19. Continued

OBSERVATION INFORMATION								
Reference No.	Latitude (N) Longitude (W)	Dates of Observation	Days of Data	Station Number	Depths of Measurements Below Surface (Meters)	Method of Measurement	Samples Per Hour	Commanding Officer of Ship
52	37°50'54" 122°24'42"	02/26/52-03/02/52	3.5	C42	2.4, 22.9, 44.2	RRCM	2	Marshall
53	37°50'42" 122°24'12"	02/26/52-03/02/52	4.5	C43	2.4, 11.0, 20.4	RRCM	2	Marshall
54	37°50'18" 122°23'30"	02/26/52-03/02/52	5.5	C44	2.4, 4.9, 8.2	RRCM	2	Marshall
55	37°49'06" 122°26'36"	03/21/52-03/25/52	4.2	C37	2.4, 8.2, 14.6	RRCM	2	Marshall
56	37°49'48" 122°25'54"	03/06/52-03/18/52	12.0	C38	2.4	RRCM	2	Marshall
		03/06/52-03/10/52	4.4		8.2, 14.6	RRCM	2	
57	37°50'06" 122°25'12"	03/13/52-03/18/52	4.7	C39	2.4, 14.0, 26.5	RRCM	2	Marshall
58	37°50'24" 122°25'12"	03/13/52-03/18/52	4.9	C40	2.4, 20.4, 39.0	RRCM	2	Marshall
59	37°50'54" 122°25'06"	03/20/52-03/24/52	4.2	C41	2.4, 22.9, 44.2	RRCM	2	Marshall
60	37°50'36" 122°21'54"	04/01/52-04/05/52	4.3	C30	2.4, 4.3, 6.7	RRCM	2	Marshall
61	37°49'36" 122°22'54"	02/20/52-02/24/52	4.2	C31	2.4, 4.5, 7.3	RRCM	2	Marshall
62	37°49'30" 122°23'36"	02/20/52-02/24/52	4.2	C32	2.4, 9.8, 18.0	RRCM	2	Marshall
63	37°49'36" 122°24'24"	02/20/52-02/24/52	4.2	C33	2.4, 11.6, 21.7	RRCM	2	Marshall
64	37°49'30" 122°24'54"	02/20/52-02/24/52	4.2	C34	2.4, 13.1, 24.4	RRCM	2	Marshall

Table 19. Continued

OBSERVATION INFORMATION								
Reference No.	Latitude (N) Longitude (W)	Dates of Observation	Days of Data	Station Number	Depths of Measurements Below Surface (Meters)	Method of Measurement	Samples Per Hour	Commanding Officer of Ship
65	37°49'12" 122°25'18"	08/25/53-08/28/53	3.7	C35	2.4, 17.1	RRCM	2	Latham
66	37°48'48" 122°25'30"	09/01/53-09/05/53	5.0	C36	2.4, 6.4, 10.4	RRCM	2	Latham
		09/09/53-09/11/53	2.4		13.4	RRCM	2	
67	37°48'24" 122°23'12"	03/27/52-03/31/52	4.3	C22	2.4, 11.9, 22.3	RRCM	2	Marshall
68	37°48'36" 122°22'42"	03/25/52-03/29/52	4.4	C23	2.4, 19.2, 36.6	RRCM	2	Marshall
69	37°49'06" 122°23'24"	03/26/52-03/30/52	4.3	C24	2.4, 14.9, 28.1	RRCM	2	Marshall
70	37°49'18" 122°22'42"	03/22/52-03/26/52	4.2	C25	2.4, 7.3, 13.1	RRCM	2	Marshall
71	37°49'30" 122°21'30"	03/31/52-04/04/52	5.2	C26	2.4, 5.2, 8.5	RRCM	2	Marshall
72	37°49'36" 122°21'06"	03/31/52-04/04/52	5.4	C27	2.4, 6.4, 11.3	RRCM	2	Marshall
73	37°50'18" 122°22'18"	04/16/52-04/17/52	1.0	C29	2.4, 4.3, 6.7	RRCM	2	Marshall
		04/21/52-04/26/52	5.0		2.4, 4.3, 6.7	RRCM	2	
74	37°43'54" 122°18'48"	02/06/52-02/11/52	5.5	C11	2.4, 4.5, 7.5	RRCM	2	Marshall
75	37°43'54" 122°17'36"	02/06/52-02/10/52	4.1	C12	1.8	RRCM	2	Marshall
76	37°46'24" 122°22'06"	02/13/52-02/17/52	4.1	C13	2.4, 7.9, 14.0	RRCM	2	Marshall
77	37°46'30" 122°21'12"	02/13/52-02/17/52	4.2	C14	2.4, 8.2, 14.9	RRCM	2	Marshall

Table 19. Continued

OBSERVATION INFORMATION								
Reference No.	Latitude (N) Longitude (W)	Dates of Observation	Days of Data	Station Number	Depths of Measurements Below Surface (Meters)	Method of Measurement	Samples Per Hour	Commanding Officer of Ship
78	37°46'36" 122°20'18"	02/13/52-02/17/52	4.2	C15	2.4, 5.5, 9.2	RRCM	2	Marshall
79	37°46'42" 122°19'30"	02/14/52-02/16/52	2.2	C16	1.8, 3.7	RRCM	2	Marshall
80	37°48'06" 122°21'42"	04/05/52-04/08/52	3.3	C17	2.4, 8.2, 14.6	RRCM	2	Marshall
81	37°48'24" 122°20'42"	04/05/52-04/13/52	8.2	C18	2.4, 5.5, 9.5	RRCM	2	Marshall
82	37°48'06" 122°20'24"	04/14/52-04/18/52	4.3	C19	2.4, 5.2, 8.5	RRCM	2	Marshall
83	37°47'42" 122°19'06"	02/02/54-02/06/54	4.2	C20	2.4, 4.3, 6.1	RRCM	2	Latham
84	37°28'30" 122°04'12"	05/12/53-05/14/53	2.5	C1	2.4, 4.3, 6.1	RRCM	2	Latham
85	37°30'36" 122°07'12"	05/11/53-05/15/53	4.2	C2	2.4, 6.1, 10.7	RRCM	2	Latham
86	37°35'12" 122°15'24"	05/11/53-05/15/53	4.0	C3	2.4, 6.7, 12.2	RRCM	2	Latham
87	37°35'18" 122°15'00"	05/11/53-05/15/53	4.3	C4	2.4, 6.7, 12.2	RRCM	2	Latham
88	37°39'30" 122°21'36"	04/17/52-04/19/52	2.2	C5	1.8	RRCM	2	Latham
89	37°39'54" 122°19'24"	04/21/52-04/25/52	4.2	C6	2.4, 4.6, 7.3	RRCM	2	Marshall
90	37°40'24" 122°17'42"	06/08/53-06/13/53	4.9	C7	2.4, 3.7, 5.8	RRCM	2	Latham

Table 19. Continued

OBSERVATION INFORMATION								
Reference No.	Latitude (N) Longitude (W)	Dates of Observation	Days of Data	Station Number	Depths of Measurements Below Surface (Meters)	Method of Measurement	Samples Per Hour	Commanding Officer of Ship
91	37°40'42" 122°15'36"	04/14/52-04/16/52	2.1	C8	1.8	RRCM	2	Marshall
92	37°43'48" 122°20'54"	02/06/52-02/11/52	5.3	C9	2.4, 9.1, 16.8	RRCM	2	Marshall
93	37°43'48" 122°20'12"	02/06/52-02/11/52	5.1	C10	2.4, 7.0, 12.2	RRCM	2	Marshall
94	37°48'30" 122°26'30"	07/31/52-08/01/52	1.0	CA	2.1, 2.4, 5.5, 8.2	Pole Price	2	Marshall
95	37°48'36" 122°25'42"	09/08/52-09/11/52	3.1	CB	2.1, 2.1, 5.2, 8.2	Pole Price	2	Marshall
96	37°48'42" 122°25'30"	09/06/52-09/09/52	3.1	CC	2.1, 1.8, 4.2, 6.7	Pole Price	2	Marshall
97	37°48'36" 122°24'30"	07/24/52-07/25/52	1.0	CD	2.1, 2.1, 5.4, 8.5	Pole Price	2	Marshall
98	37°48'24" 122°24'00"	09/02/52-09/05/52	3.1	CE	2.1, 2.7, 6.7, 10.6	Pole Price	2	Marshall
99	37°48'00" 122°23'36"	07/21/52-07/24/52	2.9	CF	2.1, 2.1, 5.4, 8.8	Pole Price	2	Marshall
100	37°47'42" 122°23'18"	07/16/52-07/18/52	2.1	CG	2.1, 2.4, 6.1, 9.7	Pole Price	2	Marshall
101	37°47'28" 122°23'00"	08/25/52-08/28/52	3.3	CH	2.1, 3.9, 9.7, 15.5	Pole Price	2	Marshall
102	37°47'00" 122°23'00"	07/15/52-07/16/52	1.0	CI	2.1, 2.1, 5.4, 8.8	Pole Price	2	Marshall
103	37°46'24" 122°22'48"	08/20/52-08/23/52	3.0	CJ	2.1	Pole	2	Marshall

Table 19. Continued

OBSERVATION INFORMATION								
Reference No.	Latitude (N) Longitude (W)	Dates of Observation	Days of Data	Station Number	Depths of Measurements Below Surface (Meters)	Method of Measurement	Samples Per Hour	Commanding Officer of Ship
104	37°45'36" 122°22'42"	07/14/52-07/15/52	1.0	CK	2.1, 2.4, 6.1, 10	Pole Price	2	Marshall
105	37°44'30" 122°22'24"	07/10/52-07/11/52	1.0	CL	2.1, 2.1, 4.8	Pole Price	2	Marshall
106	37°44'30" 122°21'42"	06/30/52-07/01/52	1.0	CM	2.1, 1.2, 3.3, 5.4	Pole Price	2	Marshall
107	37°43'42" 122°21'18"	07/07/52-07/10/52	3.1	CN	2.1, 2.7, 6.7, 10.6	Pole Price	2	Marshall
108	37°43'00" 122°21'30"	07/01/52-07/02/52	1.0	CO	1.5, 4.5, 7.3	Pole Price	2	Marshall
109	38°02'00" 121°52'18"	07/11/50-07/14/50	3.1	C1	2.0, 2.4, 5.9, 9.4	Pole Price	2	George
110	38°03'28" 122°52'06"	07/24/50-07/27/50	3.1	C2	2.0, 2.1, 4.2, 6.7	Pole Price	2	George
111	38°02'42" 121°50'30"	08/01/50-08/04/50	3.1	C3	2.0, 3.5	Pole Price	2	George
112	38°01'30" 121°49'12"	07/17/50-07/20/50	3.1	C4	2.0, 1.8, 3.9, 6.1	Pole Price	2	George
113	38°04'00" 121°50'00"	07/27/50-07/30/50	3.1	C5	2.0, 1.6, 3.9, 6.4	Pole Price	2	George
114	37°46'06" 122°22'18"	04/14/45-04/18/45	3.5	C1	2.1, 2.1, 6.1, 9.4, 11.8	Pole Price	2	Warwick
115	37°46'48" 122°20'36"	04/14/45-04/18/45	3.6	C2	2.1, 2.4, 7.0, 10.7, 13.7	Pole Price	2	Warwick
116	37°43'48" 122°20'18"	04/14/45-04/18/45	3.5	C4	2.1, 3.6, 7.9, 12.2, 15.2	Pole Price	2	Warwick

Table 19. Continued

OBSERVATION INFORMATION								
Reference No.	Latitude (N) Longitude (W)	Dates of Observation	Days of Data	Station Number	Depths of Measurements Below Surface (Meters)	Method of Measurement	Samples Per Hour	Commanding Officer of Ship
117	37°43'48" 122°18'48"	04/14/45-04/14/45	3.9	C5	2.1, 2.1, 4.2, 7.9, 9.4	Pole Price	2	Warwick
118	37°43'54" 122°17'54"	04/14/45-04/18/45	3.5	C6	.76, 1.2, 3.0, 4.2, 5.7	Pole Price	2	Warwick
119	37°40'54" 122°21'42"	04/14/45-04/18/45	3.5	C8	2.1, 1.6, 3.6, 6.1, 7.0	Pole Price	2	Warwick
120	37°41'28" 122°20'00"	04/14/45-04/18/45	3.7	C9	2.1, 1.8, 5.4, 7.9, 9.1	Pole Price	2	Warwick
121	37°50'00" 122°22'00"	05/01/45-05/04/45	3.3	C1	2.1, 1.8, 4.5, 7.3	Pole Price	2	Warwick
122	37°49'54" 122°21'32"	05/01/45-05/04/45	3.3	C2	2.1, 2.1, 5.4, 8.5	Pole Price	2	Warwick
123	37°49'24" 122°21'24"	05/01/45-05/04/45	3.2	C3	2.1, 2.7, 2.4, 8.2	Pole Price	2	Warwick
124	37°49'12" 122°21'24"	05/01/45-05/04/45	3.0	C4	2.1, 1.8, 5.1, 7.9	Pole Price	2	Warwick
125	37°49'24" 122°21'28"	05/03/45-05/04/45	1.0	C5	2.1, 1.8, 4.5, 7.3	Pole Price	2	Warwick
126	37°49'54" 122°22'48"	07/27/42-08/06/42	11.0	C1	2.1, 1.8, 4.5, 7.3	Pole Price	2	Pagenhart
127	37°49'24" 122°23'00"	04/24/42-04/26/42	2.0	C1	2.1, 3.6, 9.1, 14.6	Pole Price	2	Chovan
128	37°48'35" 122°25'20"	09/09/42-09/12/42	3.1	C1	1.9, .9, 2.1, 3.3	Pole Price	2	

Table 19. Continued

OBSERVATION INFORMATION								
Reference No.	Latitude (N) Longitude (W)	Dates of Observation	Days of Data	Station Number	Depths of Measurements Below Surface (Meters)	Method of Measurement	Samples Per Hour	Commanding Officer of Ship
129	37°43'54" 122°21'30"	03/26/42-03/29/42	3.1	C1	2.1, 4.2, 10.6, 17.0	Pole Price	2	Pagenhart
130	37°49'28" 122°25'28"	12/03/40-12/06/40	3.1	CA	2.1, 3.0, 7.6, 12.2	Pole Price	2	Horne
131	37°46'18" 122°22'30"	12/10/40-12/13/40	3.1	CB	2.1, 2.7, 6.8, 10.9	Pole Price	2	Horne
132	37°49'54" 122°24'12"	12/03/40-12/06/40	3.7	CC	2.1, 3.6, 9.1, 14.6	Pole Price	2	Horne
133	37°49'18" 122°25'24"	12/16/40-12/19/40	3.1	CD	2.1, 6.1, 15.2, 24.4	Pole Price	2	Horne
134	37°45'06" 122°20'12"	12/10/40-12/13/40	3.2	CE	2.1, 3.0, 7.6, 12.2	Pole Price	2	Horne
135	37°53'00" 122°23'36"	11/14/39-11/16/39	3.2	C1	2.2, 3.0, 5.1	Pole Price	2	Horne
136	37°49'54" 122°21'30"	04/13/38-04/15/38	3.1	C1	2.1	Pole	2	Lukens
137	37°50'24" 122°22'30"	04/18/38-04/20/38	3.0	C2	2.1	Pole	2	Lukens
138	37°49'12" 122°22'48"	04/21/38-04/23/38 06/12/38-06/14/38 06/19/38-06/21/38	3.0 3.0 3.1	C3	2.1	Pole	2	Lukens
139	37°49'24" 122°27'06"	08/16/37-08/16/37	3.2	C1	2.1, 7.3, 18.3, 29.2	Pole Price	2	Lukens
140	37°50'18" 122°28'00"	11/01/37-11/03/37	3.2	C2	1.5, 9.1, 22.8, 36.6	Pole Price	2	

Table 19. Continued

OBSERVATION INFORMATION								
Reference No.	Latitude (N) Longitude (W)	Dates of Observation	Days of Data	Station Number	Depths of Measurements Below Surface (Meters)	Method of Measurement	Samples Per Hour	Commanding Officer of Ship
141	37°46'42" 122°33'32"	11/12/36-11/13/36	3.0	C1	2.1, 4.2	Pole Price	2	Hawley
142	37°46'28" 122°37'12"	04/02/34-04/05/34	3.1	C1	2.1, 2.7, 7.0, 10.9	Pole Price	2	Hardy
143	37°26'36" 122°03'06"	08/19/31-08/20/31	1.5	C1	2.1, 1.2, 2.7, 4.2	Pole Ekman	2	Jones
144	37°30'00" 122°06'36"	09/15/31-09/17/31	2.5	C2	2.1, 3.0, 7.6, 12.8	Pole Ekman	2	Jones
145	38°02'06" 122°22'06"	01/05/30-01/07/30	2.0	C1	1.8, 3.6, 5.4, 7.3, 9.4, 10.6, 12.2	Pole Ekman	2	U.S. Engineers
146	38°03'42" 122°22'00"	01/05/30-01/06/30	1.1	C2	0.9, 3.3	Pole Ekman	2	U.S. Engineers
147	37°48'18" 122°23'12"	06/02/30-06/04/30	2.1	C1	15.2, 18.3, 21.3 3.0, 6.1, 9.1, 12.2	Pole Ekman	2	U.S. Engineers
148	37°48'30" 122°22'48"	06/02/30-06/04/30	2.1	C2	21.3, 27.4, 33.5, 3.0, 9.1, 15.2	Ekman	2	U.S. Engineers
149	37°49'00" 122°21'30"	06/02/30-06/04/30	2.1	C3	12.2, 15.2, 18.3, 3.0, 6.1, 9.1	Ekman	2	U.S. Engineers
150	37°49'12" 122°21'00"	06/02/30-06/04/30	2.1	C4	7.3, 9.1, 10.9, 1.8, 3.6, 5.4	Ekman	2	U.S. Engineers

277 Stations 1856 - 1930

Most of the historical current data from this area came from a survey conducted from 1952 to 1954. These data were obtained using Roberts Radio current meters. Information concerning early methods of current measurement can be found in the Manual of Current Observations, U.S. Coast and Geodetic Survey, S.P. 215, 1950. Predictions and mean values for some of these historical current stations can be found in "Tidal Current Tables, Pacific Coast of North America and Asia," published by NOS.

Of the 150 current stations listed in table 19, only five stations have more than 10 consecutive days of data. Only one station has over 29 days of data, the number of days needed to obtain reasonably accurate values for the five main harmonic constituents (M_2, S_2, N_2, O_1, and K_1).

7.3. Tide Data

Table 20 presents the following pertinent information about the NOS historical tide stations: station number, station name, and geographic coordinates. The historical tide data in this area are extensive, evidenced by the fact that there are 221 historical sites.

Various types of water-level measuring devices were used to obtain these data. Descriptions of these devices can be found in Manual of Tide Observations, U.S. Coast and Geodetic Survey, Pub. 30-1, 1965, or in Tidal Datum Planes, U.S. Coast and Geodetic Survey, S.P. 135, 1951. Predictions and mean ranges for some of the historical tide stations can be found in "Tide Tables, West Coast of North and South America," published by NOS.

7.4. Temperature and Density Data

Although no STD observations, or observations from current meters with temperature sensors, have been made in this area prior to this survey, temperature and density measurements have been made for many years at some of the tide stations. These were strictly surface measurements usually made once

Table 20. NOS Historical Tide Stations Occupied in the San Francisco Bay Area

STATION NO.	STATION NAME	LATITUDE (N)	LONGITUDE (W)
941-3375	Carmel Cove	36°31'12"	121°56'24"
941-3450	Monterey	36°36'18"	121°53'18"
941-3745	Santa Cruz	36°57'30"	122°01'00"
941-3878	Ano Nuevo Island	37°06'30"	122°20'18"
941-4128	Half Moon Bay	37°30'00"	122°29'00"
941-4129	Princeton	37°30'06"	122°29'12"
941-4262	Farallon Islands	37°42'00"	123°00'00"
941-4273	Lurline Pumping Station	37°46'24"	122°30'00"
941-4275	Ocean Beach	37°46'30"	122°30'48"
941-4277	Point Lobos	37°46'54"	122°30'48"
941-4290	Fort Point	37°48'24"	122°27'54"
941-4291	Fort Point (Back Up)	37°48'24"	122°27'54"
941-4292	Fort Point (Back Up)	37°48'24"	122°27'54"
941-4293	WLTS	37°48'24"	122°27'54"
941-4294	Presidio	37°48'00"	122°27'00"
941-4305	North Point (Pier 41)	37°48'36"	122°24'48"
941-4306	North Beach	37°48'00"	122°25'00"
941-4307	Mission Street	37°48'00"	122°24'00"
941-4308	Couzins Wharf	37°48'12"	122°23'48"
941-4309	Powell Street Wharf	37°48'30"	122°25'06"
941-4314	Ferry Building	37°47'42"	122°23'30"
941-4317	Pier 22½	37°47'24"	122°23'12"
941-4322	CPRR Wharf	37°46'00"	122°23'00"
941-4323	Mission Bay	37°46'00"	122°24'00"
941-4334	Potrero Point	37°45'30"	122°23'00"
941-4353	Point Avisadero	37°44'00"	122°21'00"
941-4358	Hunters Point	37°43'48"	122°21'24"
941-4391	South San Francisco	37°40'00"	122°23'24"
941-4392	Oyster Point Marina	37°39'54"	122°22'36"
941-4402	Point San Bruno	37°39'00"	122°22'36"
941-4403	Baden Light	37°39'06"	122°21'54"
941-4411	Bel Air	37°38'18"	122°23'48"
941-4413	Seaplane Harbor	37°38'12"	122°23'00"
941-4421	San Francisco Airport	37°37'30"	122°23'06"
941-4449	Coyote Point Marine	37°35'30"	122°18'48"
941-4453	Near Guano Island	37°34'00"	122°15'00"
941-4456	Beacon No. 2	37°35'00"	122°16'00"
941-4458	San Mateo Bridge, West	37°34'48"	122°15'12"
941-4481	Good Signal	37°34'18"	122°12'24"
941-4482	Beacon No. 4, South S. F.	37°33'12"	122°12'30"
941-4483	Bay Slough, West End	37°33'06"	122°14'36"
941-4484	South Belmont Oyster House	37°32'30"	122°13'18"
941-4486	Bay Slough, East End	37°32'42"	122°13'18"
941-4501	Redwood Creek, C. M. No. 8	37°32'00"	122°11'36"
941-4502	Redwood Creek	37°31'18"	122°12'06"
941-4504	Jarvis Landing, Newark Sl.	37°31'30"	122°03'42"
941-4505	Corkscrew Slough	37°30'30"	122°12'36"

Table 20. Continued

STATION NO.	STATION NAME	LATITUDE (N)	LONGITUDE (W)
941-4506	Newark Slough	37°30'48"	122°04'48"
941-4507	West Point Slough	37°30'18"	122°11'30"
941-4508	Redwood Creek	37°30'48"	122°12'36"
941-4509	Dumbarton Bridge	37°30'24"	122°07'06"
941-4510	Dumbarton Point	37°30'00"	122°06'00"
941-4512	Dumbarton S.P.R.R. Bridge	37°30'00"	122°07'00"
941-4513	Granite Rock, Smith Slough	37°29'42"	122°12'48"
941-4514	Ravenswood Slough	37°29'48"	122°10'18"
941-4519	Mowry Slough	37°29'36"	122°02'30"
941-4521	Mud Slough, R. R. Bridge	37°28'06"	121°59'12"
941-4522	Calaveras Point	37°28'00"	122°03'00"
941-4523	Redwood City, Wharf 5	37°30'24"	122°12'36"
941-4525	Palo Alto Yacht Harbor	37°27'24"	122°06'18"
941-4533	Guadalupe Slough	37°26'12"	122°01'36"
941-4537	Palo Alto, C. M. 8	37°28'06"	122°05'48"
941-4538	Palo Alto, C. M. 8 (Back Up)	37°28'06"	122°05'48"
941-4539	Menlo Oyster Camp	37°28'00"	122°04'00"
941-4547	Guadalupe Slough (Back Up)	37°27'12"	122°02'00"
941-4548	Guadalupe Slough	37°27'12"	122°02'00"
941-4549	Upper Guadalupe Slough	37°26'06"	122°00'24"
941-4551	Gold Street Bridge	37°25'24"	121°58'30"
941-4561	Coyote Creek, Trib. #1	37°26'48"	121°57'48"
941-4575	Alviso Slough	37°27'48"	122°01'24"
941-4584	Upper Coyote Creek, #3	37°27'42"	121°57'12"
941-4585	Upper Coyote Creek, Trib. #3	37°27'42"	121°57'12"
941-4589	Coyote Creek, Trib. #2	37°27'36"	121°57'12"
941-4592	Dicks Signal	37°32'06"	122°08'54"
941-4609	South Bay Wreck	37°33'06"	122°09'42"
941-4620	Coyote Hills Slough	37°33'48"	122°05'36"
941-4621	Coyote Hills Slough	37°33'48"	122°07'42"
941-4624	Coyote Oyster House	37°34'12"	122°09'54"
941-4632	Alameda Creek	37°35'42"	122°48'42"
941-4635	Mt. Eden Slough	37°37'00"	122°07'30"
941-4636	Union City	37°36'06"	122°05'30"
941-4637	San Mateo Bridge, East	37°36'30"	122°10'54"
941-4672	Roberts Landing	37°40'30"	122°09'54"
941-4684	Collins Oyster House	37°41'30"	122°11'54"
941-4688	San Leandro Marina	37°41'42"	122°11'30"
941-4689	Mulford Landing	37°42'00"	122°11'00"
941-4711	Oakland Airport	37°43'54"	122°12'30"
941-4724	San Leandro Channel	37°44'54"	122°14'06"
941-4735	San Antonio Creek	37°46'00"	122°13'00"
941-4745	Oakland, Park St. Bridge	37°46'24"	122°14'12"
941-4746	Oakland/Alameda	37°46'18"	122°14'06"
941-4747	Alameda, Park St. Bridge	37°46'18"	122°13'24"
941-4750	Alameda (NAS)	37°46'18"	122°17'54"
941-4751	Alameda (Back Up)	37°46'30"	122°17'54"
941-4752	Peralta Wharf	37°46'00"	122°17'00"

Table 20. Continued

STATION NO.	STATION NAME	LATITUDE (N)	LONGITUDE (W)
941-4755	Encinal Boat Club	37°45'42"	122°15'48"
941-4756	Alameda Light Plant	37°45'48"	122°15'48"
941-4757	High Street Bridge	37°45'54"	122°14'06"
941-4758	Alameda Airport	37°47'24"	122°19'24"
941-4762	Sessions Basin	37°47'00"	122°16'00"
941-4763	Oakland Hbr. at Grove St.	37°47'42"	122°17'00"
941-4764	Oakland Inner Harbor	37°47'42"	122°16'54"
941-4765	Narrow Gage Pier	37°47'42"	122°19'48"
941-4766	Lake Merritt	37°48'00"	122°16'00"
941-4779	Matson Wharf	37°48'36"	122°19'36"
941-4782	Yerba Buena Island	37°48'36"	122°21'36"
941-4784	Treasure Island	37°49'42"	122°21'54"
941-4786	Point Diablo	37°49'12"	122°30'00"
941-4787	Rodeo Cove	37°49'24"	122°32'06"
941-4792	Alcatraz Island	37°49'36"	122°25'00"
941-4795	Lime Point, Horseshoe Bay	37°49'48"	122°28'42"
941-4804	Sausalito, Marinship	37°51'48"	122°29'30"
941-4805	Sausalito (1878)	37°51'00"	122°29'00"
941-4806	Sausalito	37°50'48"	122°28'36"
941-4807	Sausalito (1851)	37°51'12"	122°28'36"
941-4811	Bradmoor Island	38°11'00"	121°55'24"
941-4815	Angel Island	37°51'42"	122°25'12"
941-4816	Berkeley	37°51'54"	122°18'24"
941-4817	West Garrison	37°51'36"	122°26'36"
941-4818	East Garrison	37°51'48"	122°25'12"
941-4819	COE Dock	37°51'54"	122°29'36"
941-4820	Southampton School	37°53'00"	122°24'00"
941-4821	El Campo	37°54'06"	122°28'06"
941-4822	Raccoon Strait	37°52'00"	122°27'00"
941-4824	Strawberry Point	37°53'00"	122°30'00"
941-4829	Immigrant Cove	37°52'12"	122°25'36"
941-4837	Point Chauncey	37°53'30"	122°26'36"
941-4839	Point Chauncey	37°53'36"	122°26'54"
941-4843	Point Isabel	37°53'54"	122°19'12"
941-4846	Brooks Island	37°53'54"	122°21'18"
941-4849	Richmond Inner Harbor	37°54'36"	122°21'30"
941-4851	Ellis Landing	37°55'00"	122°22'00"
941-4863	Chevron Oil Pier	37°55'42"	122°24'00"
941-4873	Point San Quentin	37°56'42"	122°28'30"
941-4874	Corte Madera Creek	37°56'36"	122°30'48"
941-4881	Point Orient	37°57'30"	122°25'30"
941-4885	Point San Pablo	37°56'54"	122°24'42"
941-4906	Point Bonita	37°49'06"	122°31'42"
941-4958	Bolinas	37°54'36"	122°40'54"
941-4974	Bon Air Bridge	37°56'42"	122°32'12"
941-5001	San Pablo Bay	37°59'00"	122°27'00"
941-5009	Point San Pedro	37°59'24"	122°26'48"

Table 20. Continued

STATION NO.	STATION NAME	LATITUDE (N)	LONGITUDE (W)
941-5018	Point Reyes (1866)	38°00'00"	123°01'00"
941-5019	Point Reyes (Back Up)	37°59'30"	122°58'30"
941-5020	Point Reyes	37°59'30"	122°58'30"
941-5023	Point Wilson	38°00'00"	122°19'00"
941-5052	Gallinas	38°00'54"	122°30'12"
941-5056	Point Pinole	38°00'54"	122°21'48"
941-5064	Antioch	38°01'12"	121°48'54"
941-5074	Hercules	38°01'24"	122°17'30"
941-5093	Black Diamond	38°02'00"	121°53'00"
941-5094	Martinez	38°02'00"	122°08'00"
941-5096	Pittsburg	38°02'12"	121°52'48"
941-5101	Mallard Slough	38°02'12"	121°55'48"
941-5103	Suisun Point	38°02'06"	122°07'24"
941-5111	Benicia	38°02'36"	122°07'48"
941-5112	Mallard Island	38°02'36"	121°55'06"
941-5116	UCO Terminals Inc. Wharf	38°02'42"	122°06'00"
941-5128	Bay Point	38°03'30"	122°01'48"
941-5131	Port Costa	38°03'00"	122°11'00"
941-5142	Selby	38°03'30"	122°14'36"
941-5143	Crockett	38°03'30"	122°13'24"
941-5144	Port Chicago	38°03'24"	122°02'18"
941-5164	Mare Island Naval Shipyard	38°05'48"	122°15'48"
941-5165	Mare Island Strait	38°06'42"	122°16'24"
941-5166	Carquinez Strait	38°04'12"	122°14'30"
941-5169	Mare Island Light	38°04'18"	122°15'18"
941-5176	Collinsville	38°04'24"	122°50'54"
941-5179	Magazine Wharf	38°04'36"	122°14'54"
941-5191	Freeman's Signal	38°05'00"	121°59'00"
941-5192	Ryer Island	38°05'00"	122°00'00"
941-5197	Simmons Island	38°05'06"	121°59'30"
941-5203	Commission Rock	38°05'18"	122°15'24"
941-5205	Montezuma Slough	38°04'36"	121°53'06"
941-5206	Hospital Wharf	38°05'24"	122°15'42"
941-5217	Independence Wharf	38°05'42"	122°15'48"
941-5218	Naval Shipyard	38°04'12"	122°15'00"
941-5223	Mare Island, San Pablo Bay	38°05'54"	122°20'12"
941-5225	Beacon No. 2	38°06'00"	122°26'00"
941-5226	Mare Island, Dry Dock	38°06'00"	122°16'00"
941-5227	Point Buckler	38°06'00"	122°02'00"
941-5252	Petaluma River Entrance	38°06'42"	122°29'54"
941-5253	Mare Island, Ferry Slip	38°06'48"	122°16'00"
941-5261	Echo Board, Suisun Bay	38°07'00"	122°04'00"
941-5262	Vallejo Brickyard Wharf	38°07'00"	122°17'00"
941-5265	Suisun Slough Entrance	38°07'42"	122°04'24"
941-5266	Goodyear Slough	38°07'36"	122°06'00"
941-5292	Grizzly Bay	38°08'00"	122°00'00"
941-5293	Montezuma Slough	38°08'00"	122°04'00"

Table 20. Continued

STATION NO.	STATION NAME	LATITUDE (N)	LONGITUDE (W)
941-5297	Montezuma Slough Entrance	38°08'06"	122°03'54"
941-5307	Meins Landing	38°08'12"	121°54'24"
941-5328	Slaughter House Point	38°09'00"	122°17'00"
941-5338	Sonoma Creek Entrance	38°09'24"	122°24'24"
941-5344	Hog Island	38°09'42"	122°33'00"
941-5345	Denverton Slough	38°10'00"	121°56'00"
941-5356	Sonoma Creek	38°10'00"	122°25'00"
941-5379	Joice Island	38°10'48"	122°02'42"
941-5402	Montezuma Slough Bridge	38°11'12"	121°58'48"
941-5415	Edgerly Island	38°11'30"	122°18'42"
941-5423	Lakeville	38°11'54"	122°32'48"
941-5428	South Slough	38°09'06"	122°21'54"
941-5446	Brazos Drawbridge	38°12'36"	122°18'24"
941-5447	Sonoma Creek, Wingo	38°12'36"	122°25'36"
941-5498	Suisun City	38°14'12"	122°01'48"
941-5623	Napa	38°17'54"	122°17'00"
941-5625	Bodega Head	38°18'30"	123°03'18"
941-5640	Bodega Head Marine Lab.	38°19'00"	123°04'18"
941-5658	Bodega Bay	38°19'30"	123°02'24"
941-6841	Point Arena	38°55'12"	123°43'12"
941-6842	Point Arena (Back Up)	38°55'12"	123°43'12"

each weekday (at varying times). Measurements were made using a thermometer and several hydrometers. Table 21 presents station locations and the periods for which observations were taken.

Although these daily surface observations give no information about the entire vertical water column or about the changes over a tidal cycle, they do supply valuable seasonal information. Monthly means for much of these data can be found in "Surface Water Temperature and Density, Pacific Coast," NOS Pub. 31-1, 1970.

Table 21. NOS Historical Temperature and Density Data

STATION INFORMATION

Name	Latitude (N)	Longitude (W)	Observation Period
Southeast Farallon Is.	37°42'00"	123°00'00"	1926 - 1969
Fort Point	37°48'00"	122°28'00"	1855 - Present
Yerba Buena Is.	37°49'00"	122°22'00"	1937
Alameda	37°47'00"	122°18'00"	1940 - Present
Hunters Point	37°44'00"	122°22'00"	1945 - 1956
Dumbarton Bridge	37°30'00"	122°07'00"	1937 and 1952
Sausalito	37°51'00"	122°29'00"	1893 - 1896 1937 and 1952
Point San Quentin	37°57'00"	122°29'00"	1937
Mare Island Strait	38°06'00"	122°16'00"	1937
Benicia	38°03'00"	122°08'00"	1937 and 1952
Pittsburg	38°02'00"	121°53'00"	1952
Threemile Slough	38°05'00"	121°41'00"	1938 - 1940
Collinsville	38°04'00"	121°51'00"	1937

ACKNOWLEDGEMENTS

The authors wish to extend their gratitude to the personnel of the Circulation Section and the Sea and Lake Levels Branch for their participation in the processing of the 1979 and 1980 NOS data described in this report. Those personnel deserving individual recognition include James T. Bruce, Brenda W. Via, Gina A. Stoney, Leonard E. Hickman, and Carol A. Robinson. Dr. Ralph T. Cheng of the U.S. Geological Survey was responsible for the coordination of the USGS data collection effort. The NOAA Ship McARTHUR and the USGS R/V POLARIS were the primary ships used to acquire the circulation survey data. Douglas M. Martin assisted with the DSTG effort and Thomas N. Mero with the S/N study. Carol Robinson typed the drafts, tables and text. Lilly Redd prepared the final report.

REFERENCES

ALPINE, A. E., J. E. CLOERN, AND B. E. COLE.

1981. Plankton studies in San Francisco Bay, I, chlorophyl distribution and hydrographic properties of the San Francisco Bay estuary, July 1977 - December 1979. U.S. Geological Survey Open - File Report 81-213, 150pp.

ATLAS, E. L., S. W. HAGER, L. E. GORDON, AND P. K. PARK.

1971. A practical manual for use of the Technician Auto Analyzer in sea water nutrient analyses, revised. Department of Oceanography, Oregon State University, Corvallis, Ref. 71-22.

BODNAR, A. N.

1977. User's guide for the establishment of tidal bench marks and leveling requirements for tide stations. U.S. Department of Commerce, NOAA, National Ocean Service, 33pp.

CARPENTER, J. H.

1965. The Chesapeake Bay Institute technique for the Winkler dissolved oxygen method. Limnology and Oceanography, vol. 10, pp. 141-143.

CHENG, R. T. AND J. W. GARTNER.

1980. Working notes on current meter deployment, recovery, maintenance, and data processing for San Francisco Bay. U.S. Geological Survey Open - File Report 80-1297, 68pp.

CONOMOS, J. T., D. S. McCULLOCH, P. H. PETERSON, AND P. R. CARLSON.

1971. Drift of surface and near-bottom waters of the San Francisco Bay system: March 1970 through April 1971. U.S. Geological Survey Open - File Map.

CONOMOS, J. T. AND D. H. PETERSON.

1977. Suspended particle transport and circulation in San Francisco Bay: An overview. In M. Wiley (editor), Estuarine processes, vol. 2., Academic Press, New York, pp. 82-97.

CONOMOS, JOHN T.

1979. Introduction. In John T. Conomos (editor), San Francisco Bay, the urbanized estuary. Fifty-eighth annual meeting, Pacific Division, American Association for the Advancement of Science, San Francisco, California, p. 7.

CULBERSON, CHARLES, R. M. PYTKOWICZ, AND J. E. HAWLEY.

1969. Sea water alkalinity determination by the pH method. Jour. Mar. Res. 28: pp. 15-21.

DEDINI, L. A., L. E. SCHEMEL, AND M. A. TEMBREULL.

1982. Salinity and temperature measurements in San Francisco Bay waters, 1980. U.S. Geological Survey Open - File Report 82-125, 130 pp.

FEDERAL GEODETIC CONTROL COMMITTEE.

1974 (reprint 1978). Classification standards of accuracy, and general specification of geodetic control surveys. U.S. Department of Commerce, NOAA, National Ocean Survey, 12 pp.

FISCHER AND PORTER COMPANY.

1974. Fischer and Porter - instruction bulletin (number 35-1550C) for Type 1550 and 1551 punched tape level recorder (spring counterbalance type) design level "C." Fischer and Porter Company, Warminster, Pennsylvania, 18 pp.

GORDON, L. I. AND P. K. PARK.

1972. A continuous pCO2 measurement system. Department of Oceanography, Oregon State University, Corvallis. Technical Report 240, 77 pp.

HARMON, D. A., P. V. CASCOS, AND R. E. SMITH.

1983. Distribution of nitrogen, suspended particulate matter and light in a partially mixed estuary. Submitted: Estuarine and Coastal Shelf Science.

HEDGPETH, J. W.

1969. The San Francisco Bay - Delta estuary, an ecological system. In The Nation's estuaries, San Francisco Bay and Delta, California, Part 2. Hearing, House Subcommittee of the Committee on Government Operations, U.S. 91st Congress, First Session, pp. 367-386.

1979. San Francisco Bay - the unsuspected estuary: A history of researches. In John T. Conomos (editor), San Francisco, the urbanized estuary. Fifty-eighth annual meeting, Pacific Division, American Association for the Advancement of Science, San Francisco, California, pp. 9-29.

IMBERGER, J., W. B. KIRKLAND, JR., AND H. B. FISCHER.

1977. The effect of delta outflow on density stratification in San Francisco Bay: Report to ABAG (Association of Bay Area Governments). Rep. HBF-77/02. Berkeley, California, 109 pp.

MAY, P. R.

1970. Origins of hydraulic mining in California. The Holmes Book Company, Oakland, California, 88 pp.

McCULLOCH, D. S., D. H. PETERSON, P. R. CARLSON, AND J. T. CONOMOS.

1970. Some effects of fresh-water inflow on the flushing of south San Francisco Bay: A preliminary report. U.S. Geological Survey Circ. 637A, 27 pp.

MENZEL, D. W. AND R. F. VACCARO.

1964. The measurement of dissolved organic and particulate carbon in sea water. Limnology Oceanography, vol. 9, pp. 138-142.

METERCRAFT CORPORATION

1975. Instruction: Dry purged pressure recording tide gage by Metercraft. Metercraft Corporation, Perry Hall, Maryland, 20 pp.

NATIONAL OCEAN SURVEY.

1982. California marine boundary program, final report: for State Lands Commission, California, U.S. Department of Commerce, NOAA, National Ocean Service, 37 pp.

NICHOLS, FREDERICK.

1982. When the water crises hits. In San Francisco Chronicle, December 9, 1982, San Francisco, California, p. 53.

PATCHEN, R. C. and R. T. CHENG

1979. Current Survey of San Francisco Bay by NOS/USGS. AGU, EOS, vol. 60, no. 46, p. 843.

PATCHEN, R. C., J. J. JOHNSON, T. N. STEPKA, G. D. PETRAE, AND M. J. CONNOLLY.

1982. Certification of the circulation measurements data processing system. U.S. Department of Commerce, NOAA, National Ocean Service, 48 pp.

PEARSON, C. A.

1975. Deep-sea tide and current observations in the Gulf of Alaska and Northeast Pacific. U.S. Department of Commerce, NOAA Technical Memo. NOS 16, 23 pp.

PESTRONG, RAYMOND.

1972. San Francisco Bay tidelands. California Geology 25(2): February 1972, pp. 27-40.

PHILLIPS, J. O.

1975 (reprint 1978). Specifications to support classification, standards of accuracy, and general specifications of geodetic control surveys. U.S. Department of Commerce, NOAA, National Ocean Survey, 31 pp.

SCHEMEL, L. E. AND L. A. DEDINI.

1979. A continuous water-sampling and multiparameter-measurement system for estuaries. U.S. Geological Survey Open - File Report 79-273, 92pp.

SMITH, R. A.

1980. Golden Gate tidal measurements: 1854 - 1978. Proceedings American Society Civil Engineers, vol. 106, No. WW3, pp. 407-410.

SOLORZANO, L.

1969. Determination of ammonium in natural waters by the phenolhypochlorite method. Limnology and Oceanography, vol. 14, pp. 799-801.

STRICKLAND, J. D. AND T. R. PARSONS.

1972. A manual of sea water analysis (2nd edition). Fisheries Research Board of Canada, Bulletin 167, 310 pp.

TECHNICON CORPORATION.

1973. Nitrate and nitrite in water and waste water. Technicon Auto Analyzer II, Industrial method No. 100-70W, September 1973.

1976. Silicates in water and waste water. Technicon Auto Analyzer II, Industrial method No. 105-71WB, February 1973 (revised January 1976).

U.S. COAST AND GEODETIC SURVEY.

1950. Manual of current observations. Special Publication No. 215, 87 pp.

1951. Tidal datum planes. Special Publication No. 135, 135 pp.

1965. Manual of tide observations. Publication 30-1, 72 pp.

U.S. CONGRESS.

1970. Protecting America's estuaries: San Francisco Bay and Delta. 91st Congress, 2nd Session, Document No. 1433, Washington, D. C., 142 pp.

U.S. DEPARTMENT OF COMMERCE.

1853-1983. Tide tables, West Coast of North and South America. NOAA, National Ocean Service, various issues.

1890-1983. Tidal current tables, Pacific Coast of North America and Asia. NOAA, National Ocean Service, various issues.

1970. Surface water temperature and density, Pacific Coast, North and South America, and Pacific Ocean Islands. NOS Publication 31-3, 88 pp.