NO. 11

FIELD ENGINEERS BULLETIN

U. S. COAST & GEODETIC SURVEY

DECEMBER 1937

U. S. COAST AND GEODETIC SURVEY
FIELD ENGINEERS BULLETIN NUMBER 11
DECEMBER 1937
INDEX

	Page
Rear Admiral Raymond Stanton Patton	1.
Ohio Flood - Relief Work S. B. Grenell	4
Wire Drag Surveys, Pacific Coast, 1934-1937 I. E. Rittenburg	9
Watch the Notes in the Sounding Records	13
Gravity Observations and Their Uses Carl I. Aslakson	14
RAR - 1856 Model	21
Division of Tides and Currents Paul C. Whitney	22
Thank You, Major Holdridge	24
Sono-Radio Buoy Jack Senior	25
Circuit Closure	28
State Plane Co-ordinates	29
Use of the Searchlight	31
Cost Statistics, Offshore Hydrography in the Gulf of Mexico Paul Taylor	32
Santa Clara Valley Subsidence Has Now Reached 5 Ft. E. E. Stohsner (From Engineering News-Record)	37
Strength of Three-Point Locations R. M. Wilson	40
Book Review - "The World in Maps"	47
Marking Gravity Stations Carl I. Aslakson	49
The Bjerknes Cyclone Model	51
Taut Wire and Sun Azimuth Traverse Computations G. L. Anderson	53
Investigation of Marine Casualties	56
Aleutian Islands Survey Extracts from Season's Report, A.M. Sobieralski	57
Scottish Bard and English Rover (From "Empire Survey Review")	60
Automatic Brake Sounding Machines F. G. Engle	61
Bridge Windshields R. F. A. Studds	66

Page

Magnetic Observations at Sea
Paul Taylor 68

Geographic Names of Interest 70

Sono Radio Buoy Developed on Ship GUIDE, 1936
Almon M. Vincent. 73

My Love
(From Motor Boating). 85

Triangulation, Southeast Alaska, 1936
Extracts from Season's Report H. Arnold Karo. . . . 86

Surf Landings, 1901. 87

Standard Automatic Tide Gage, Recent Improvements in
E. C. McKay 88

Flight Check of Aeronautical Charts
John D. Kay 91

Seismology - 1866. 97

Radio Acoustic Ranging Circuits
Herbert Grove Dorsey. 99

Hydrographic Catamaran 104

Geographic Names
G. H. Everett 105

Bench Marks. 107

Small Scale Sheets For Form Lines
H. E. Finnegan. 108

Manual for Lifeboatmen and Able Seamen 110

Pacific Coast Cartography. 111

Tidal Observations at Sea
F. S. Borden. 112

Horses, Hydrographers, and Hypsography
John Bowie, Jr. 113

The Wreck of the Coast Survey Brig WASHINGTON, (Sequel). . . 116

Placed End to End. 116

Triangulation, Unimak Island, Extracts from Season's
Report of Ray L. Schoppe. 117

A Note on the Porcine Effects of the Tide in the Bay of Fundy 118

Project Report, Division of H. & T. 119

Statistics and Distribution of Field Parties 120

Field Memoranda, 1937. 124

RAYMOND STANTON PATTON

HEAR ADMIRAL RAYMOND STANTON PATTON

Rear Admiral Raymond Stanton Patton, Director of the Coast and Geodetic Survey, died after a long illness at his home in Washington, D. C, on November 25, 1937. He was born at Degraff, Ohio, December 29, 1882, the son of Oliver and Ida M. (Cloninger) Patton. His early education was in the public schools of Sydney, Ohio. He received his technical training at Adelbert College of Western Reserve University, from which he graduated in 1904.

Within a month after graduation he was appointed an officer in the United States Coast and Geodetic Survey and began his first field work in August, 1904, when he was assigned to duty on the Ship HYDROGRAPHER, and assisted in coast pilot revision on the Atlantic Coast. His next assignment was to a shore party engaged in topographic surveying in Virginia.

Many of his early assignments were in remote localities where surveying was a pioneering task. In 1906 he was sent to southeastern Alaska where, serving as a subordinate officer on the Ship GEDNEY, he was engaged in combined surveys. In the spring of 1907 he arrived in the Philippine Islands and was assigned as a junior officer on the Ship RESEARCH, then stationed on the north coast of Negros Island. He subsequently made surveys in various localities in the Islands, including Tanon Straits, the southeast coast of Luzon Island on the Steamer ROMBLON and later on shore parties on the Island of Bohol, on the coast of Mindanao Island and on Camiguin Island.

At the time of Admiral Patton's duty, as a junior officer, in the Philippine Islands, conditions varied considerably from those at present. It was not long after the Insurrection, and the Filipinos, especially in the outlying districts, were in a state of unrest and often were resentful toward Americans. Living conditions were far from satisfactory, often being unhealthful and generally even ordinary comforts were lacking. It required the spirit of the true pioneer to undergo, without complaint and as a matter of course, the conditions existing at that time, and Admiral Patton possessed the desire to see beyond the horizon and the determination to accomplish his task, no matter how difficult.

After his return to the United States from the Philippines in 1910 he was variously engaged surveying on the Atlantic Coast, including triangulation in the vicinity of Monomoy Point, Massachusetts, in cooperation with the hydrographic survey party on the Ship BACHE. Later during that same year he was engaged on resurveys in Delaware Bay. Early in 1911 he was assigned to the Ship BACHE as executive officer, and engaged in surveys along the coasts of the United States bordering the Gulf of Mexico. In the summer of 1911 he went to Alaska as executive officer of the Ship PATTERSON and later in that same year was engaged on surveys on the Pacific Coast of the United States and the western approaches to the Panama Canal.

In 1912 he was made commanding officer of the Ship EXPLORER and until 1915 made surveys in Alaska waters, including a survey of the approaches to the Kuskokwim River. In 1915 he was recalled to Washington and from then until 1917 was Chief of the Section of Coast Pilot. During the world war from September 1917, to March 1919, he served as a Lieutenant and Lieutenant-Commander in the United States Navy on special duty at the U. S. Naval Observatory.

At the expiration of his Naval service in 1919 he returned to duty in the Coast and Geodetic Survey and was assigned as Chief of the Division of Charts in the Washington office. He occupied this position until the spring of 1929, when he was commissioned by President Hoover as Director of the Coast and Geodetic Survey. At that time he held the rank of Captain. In March, 1936 he was promoted to the rank of Rear Admiral.

During Admiral Patton's directorship great progress was made in modernizing methods of surveying due to his own progressiveness and the leadership and encouragement he gave to those of his colleagues who had charge of the various classes of surveys. Many of these new methods were of such nature as to appear quite experimental at first,but Admiral Patton believed in progress. He was a man of sound vision and after he had convinced himself of the advantage and feasibility of a new method he encouraged the efforts of his subordinate officers in perfecting the method.

A few of the improvements made in methods and instruments during his administration are: the use of the British taut-wire apparatus for traverse-control of offshore hydrography; the Dorsey Fathometer for sounding in shoal water; and the new nine-lens air camera used in photographing areas of which topographic surveys are to be made; the Parkhurst theodolite; the Brown gravity apparatus; and various improvements in cartographic and lithographic methods.

Soon after Admiral Patton's appointment as Director of the Coast and Geodetic Survey the recent depression started in which unemployment in this country was unprecedented. Among the unemployed were many competent civil engineers and when the President requested plans for the relief of this class of valuable citizens, Admiral Patton recommended a temporary expansion of the activities of the Bureau. His recommendation was approved and his plan executed with the excellent result that not only were many deserving engineers provided with necessary work but many valuable surveys were made and with an accuracy and efficiency quite comparable to that obtained under normal conditions. Outstanding results of this temporary expansion were the complete surveying and charting of the Atlantic and Gulf Intercoastal Waterway and great progress made in the expansion over the country of the first and second order horizontal and vertical control nets. A result of this temporary employment was that large numbers of engineers gained a better understanding of the value and use of accurate surveys for all purposes.

During this period of depression Admiral Patton worked ceaselessly to an extent that his health was then undermined and this was no doubt a contributing factor in the illness which ultimately caused his death. He was active in numerous engineering and scientific societies and was a recognized authority on beach erosion problems. He was past president of the Washington Society of Engineers; life trustee of the National Geographic Society; trustee of the Woods Hole Oceanographic Institute; director of the American Shore and Beach Preservation Association and a member of the Engineering Advisory Committee on Coast Erosion to the New Jersey Board of Commerce and Navigation; member of the National Research Council; Association of American Geographers; American Society of Civil Engineers; American Geophysical Union, and the American Astronomical Society. He was also a member of the Cosmos Club.

In 1912 Admiral Patton married Virginia M. Mitchell, who survives him. He is also survived by a son and two daughters: Raymond Stanton Patton, Jr., Helen Mitchell Patton and Virginia Mitchell Patton.

Admiral Patton had a brilliant mind and was unusually gifted as an executive. Honorable Daniel C. Roper, Secretary of Commerce, pays the following tribute to him:

> "In the death of Admiral Patton the Government has lost one of its most capable officials and the engineering profession one of its outstanding leaders. He was held in the highest esteem by his associates and by Members of and committees in the Congress with whom he came in contact, and was recognized as an authority in his work throughout the world. The Coast and Geodetic Survey, over which he has been head for 8-1/2 years, is one of the most efficient and progressive bureaus of our Government. Devotion to service by men of the character, integrity, and standing of Admiral Patton gives a new assurance to American citizenship; it gives us greater confidence in the future of our country. We grieve over his passing, but we are thankful for his contribution to the service of the Department of Commerce and to the Nation."

OHIO FLOOD-RELIEF WORK

S. B. Grenell, Hydrographic and Geodetic Engineer
U. S. Coast and Geodetic Survey

Foreword by Commanding Officer of Ship OCEANOGRAPHER.

Engineer like, Lieutenant Grenell has very little to say about the actual work done by the party sent from the OCEANOGRAPHER and LYDONIA to assist in the relief work of the Red Cross in the vicinity of Ashland, Kentucky.

He was put in charge of all the launches at Ashland and controlled their movements from the district office of the Red Cross. Telephone communication enabled him to have complete knowledge of the location of each of the launches.

As for our launches the commanding officer can not but feel that they have more than paid for themselves in this work. The two 30-foot motor launches, being faster than any others on this station, were able to do more and better work than any of the others.

It is gratifying to report that aside from a few scratches which a coat of paint will remedy, the launches were undamaged on this work.

H. A. Seran, Commanding Ship OCEANOGRAPHER.

On January 26, 1937, orders were issued by the Commanding Officer of the OCEANOGRAPHER for one officer and seven members of the crews of the Ships OCEANOGRAPHER and LYDONIA to proceed to Ashland, Kentucky and report to the Director, American Red Cross, for duty in connection with flood relief. On the same date, motor launches 79, 81 and 82 were shipped via Norfolk and Western Railroad to Kenova, West Virginia, which was, at that time, the end of rail transportation on the Norfolk and Western.

The personnel and launches arrived at Kenova, West Virginia, late on the afternoon of January 27th. Early the next morning the launches were placed in the water by the simple process of backing the cars down a siding - which is normally used to supply coal to the city power plant - and floating the hulls free from the blocking. The launches were then run around to the riverfront side of the town where they were secured to a loading platform in the rear of a store building. The U. S. Post Office immediately behind the landing was under approximately twelve feet of water.

At the time of our arrival in Kenova, the flood was nearly at the crest. All the emergency evacuation of people from the flooded area of the town had been completed and these people, some three thousand in number, had been sent back to towns along the railroad where they could be taken care of. Rail transportation to Kenova was never interrupted and the people had sufficient food and medical supplies for their needs. There were two Coast Guard surf boats stationed at Kenova at that time and these boats were able to handle all of the necessary boat traffic.

Engine trouble developed on one launch and it was necessary to tear down the engine to make repairs. While repairs were underway one trip was made by launch for the purpose of carrying a doctor and health officer to the town of Ceredo, located about two miles up-river from Kenova. This town was completely cut off and could be reached only by water. An officer from the state highway patrol was sent along as guide, and, strange as it may seem, he was particularly fitted for the job because we followed U. S. Highway No. 60 all the way. The guide was able to recognize the turns by the tops of billboards and the roofs of service stations along the way.

The depth of water was sufficient for navigation, averaging twelve to fifteen feet, but a real hazard existed in the form of overhead electric wires. The street arc-light system had been left in operation with the idea of aiding night patrols in the curbing of looting, which was being carried on rather extensively. The feed lines of the light-system carried 2,200 volts, and these wires in most cases hung three to six feet above the water. Some of the arc lights suspended at the street corners actually dipped into the flood. Navigation among these wires was further complicated by the currents at the street intersections, which were flowing at a rate of three to five knots along the streets paralleling the river, while the water in the centers of the cross-street blocks was practically still. Several times we narrowly missed crashing arc lights at intersections, which, with a metal canopied launch, might have been disastrous.

Several of the Coast Guard boats were not so fortunate. One had a streak burned across the bow by a live wire, and another cut a cable with the propeller, with attending fireworks. Fortunately no one was injured.

As soon as possible after arriving at Kenova, the portable radio was set up and contact made with the ships at Norfolk. The Coast Guard had a radio truck and several portable radio stations operating in that section but we were never able to establish communication schedules because they were busy on several wave lengths most of the time.

Leaving two launches with their crews to complete repairs to motor launch No. 81, the writer proceeded with launch No. 82 to Ashland, Kentucky on the afternoon of January 28th and reported to the Red Cross Area Director stationed there. A party of ten men from the U. S. Navy with three motor whaleboats from the U. S. S. ARKANSAS, in charge of Chief Machinist Mate W. M. Hilliard, had reported in Ashland about 24 hours before our arrival. These three boats were already operating for the Red Cross and Mr. T. M. Dinsmore, the Director, requested me to take charge of dispatching all launches working directly with his unit.

The two remaining Coast Survey launches reported the next morning and all six boats were immediately pressed into service. By this time the food and water situation had become critical in the smaller towns along the river which had been cut off completely by the flood. Most of these places had been partially evacuated but there were still many people living in the upper stories of the larger buildings who were in need of food, water, fuel and medical attention, all of which had to be transported by boat.

Ashland, a city of about 33,000 population, was less affected by the flood than most of the neighboring communities because the general elevation of the town is higher and the newer residential section is on high land behind the old city. About half of the business district was under water but many of the large food warehouses were not flooded and the food situation was not critical. There was one highway open to the south and supplies were rushed in by truck over this route making it possible for Ashland to serve as a distributing point.

The water was twelve to fifteen feet deep in the flooded business district of Ashland and the problem of navigating in the streets was similar to that described earlier in this report for Kenova. The area served by the Ashland headquarters covered two counties on the Kentucky side of the river with a normal population of approximately sixty thousand. About fourteen thousand refugees were being cared for by the Red Cross in emergency barracks and feeding centers or were being supplied with food, clothing, medical service, and so forth, in their partially flooded homes. The larger towns, which were only partially flooded, were able to take care of most of their refugees, but the smaller communities, which were completely cut off from dry land, were in the most critical state. In order to give an idea of the situation in these small communities, I will

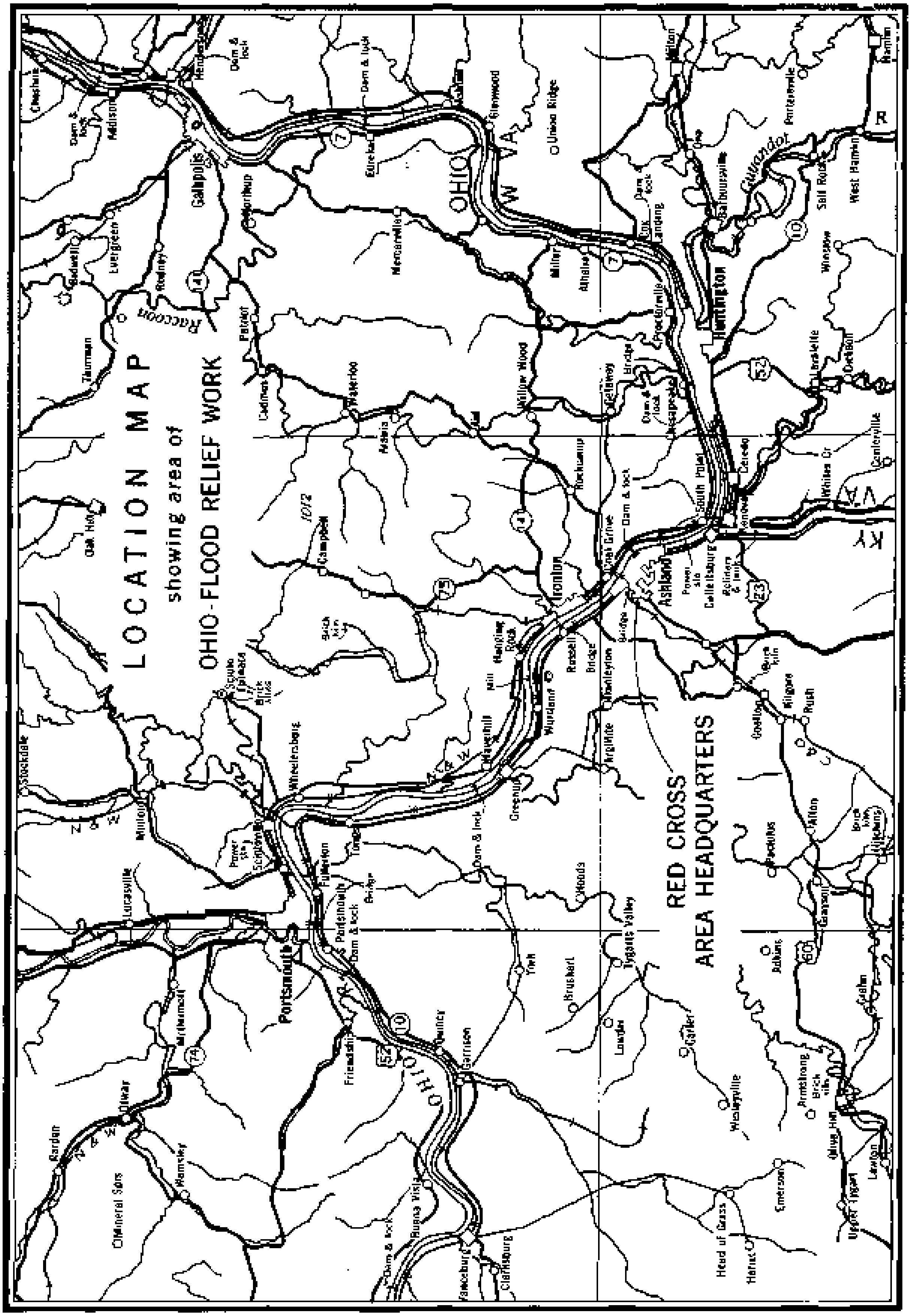
LOCATION MAP
showing area of
OHIO-FLOOD RELIEF WORK
RED CROSS
AREA HEADQUARTERS

describe the condition at Greenup, Kentucky, a town of 1,600 population, 18 miles below Ashland.

When the water first entered the town, about a thousand people evacuated but the remaining six hundred elected to ride out the flood. They were eventually forced to occupy the second floor of the school building (about four feet above the water at the crest) and twelve small cottages on a high knoll, the only habitable buildings in the community. They were cut off completely from surrounding communities, having no heat, light, food or water, no medical aid and no sanitary conveniences. The combined efforts of the county health doctor, the Red Cross and the state police could not induce them to leave, so it became necessary for the Red Cross to supply them with necessities.

For almost a week we made from one to three trips daily to Greenup, generally using the new launches from the OCEANOGRAPHER because their speed made it possible to make good headway against the current on the return trip. The mid-stream current was running a measured nine knots while the flood was at the crest, but by skirting the tree tops along the bank it was possible to make better headway against a lesser current of five or six knots.

A launch load of supplies generally would contain a list something like this: 300 loaves of bread, 100 pound sack of beans, 10 sacks of flour, 5 cases of tomatoes, 5 cases corn, 100 gallons fresh water (in 10 gal. milk cans), 20 gallons milk, 50 pounds lard, 4 sacks potatoes, and 1 case soap. The same trip might include a doctor and two nurses to be dropped off at some town along the way and the return trip might include picking up doctors, nurses or stretcher patients for the Ashland hospitals.

One of the Navy motor whaleboats, on a return trip from a town about four miles upriver, brought back a maternity case. The doctor helped to transfer the patient to the boat, then said he was unable to come along but advised the coxswain to make a quick trip as she "might deliver at any time." The vibration of the boat did not seem to have a particularly soothing effect on the patient and the situation began to look critical as the journey proceeded. The coxswain, realizing that an emergency might arise, made all preparations possible and stood by. Fortunately there was only one patient when the boat arrived and an ambulance rushed the case to a hospital. We heard a day or so later that the ambulance reached the hospital about twenty minutes ahead of the stork.

The launch work at Ashland continued at high pitch for about five days. The boats would shove off any time after daylight and return any time up to midnight. Night running was avoided as much as possible but it was sometimes necessary that a boat make a late trip and return after dark.

All of the boat personnel was quartered at the Henry Clay Hotel in Ashland and all expenses were paid by the Red Cross while the party was there.

The river began to fall rapidly on January 31st and by February 2nd had subsided to such an extent that most of the highways were passable and it was much easier to transport food and supplies by truck. The boats were held at Ashland for several days awaiting flood developments in the vicinity of Cairo, Illinois and the lower Mississippi River.

On the morning of February 6th the boats working with the Red Cross unit in Ashland were released from duty there and at 1:30 p.m. the fleet, consisting of three Coast Survey launches, three Navy motor whaleboats, and one Coast Guard surf boat, left for Cincinnati. The seven boats kept together and whenever one boat had engine trouble or stopped to gas the other boats passed a towline and no time was lost.

We ran until eight o'clock that night then tied up alongside a government dredge which was moored to the bank at Dam No. 32. At daylight, the run was resumed and the fleet arrived in Cincinnati, Ohio, at 4:15 p.m. Sunday.

The Red Cross had made arrangements for quartering and subsisting the boat personnel at the Hotel Sinton. All government boats stationed upriver from Cincinnati had concentrated there and there were 58 boats and 240 men assembled. I reported immediately to Lieutenant H. T. Jewell, Coast Guard Flood Relief Officer for that area and all subsequent arrangements for loading and shipping boats and transportation of personnel were made by him.

There was a shortage of railway cars suitable for shipping boats and only one crane available which could load boats from the water directly onto railway cars. Cars were finally secured and the loading began on February 10th. The Coast Survey launches were loaded on the afternoon of February 11th and the personnel entrained for Norfolk at 9:50 that evening. The personnel from the OCEANOGRAPHER and LYDONIA arrived in Norfolk at 6:00 p.m., February 12th and the three launches arrived at the Portsmouth Navy Yard on February 18th, where they were immediately placed in the water.

Except for a cracked cylinder block on launch No. 82 and a nicked propeller blade and a few scratches, the launches were undamaged. We were more fortunate than the Navy and Coast Guard units as several of their boats were badly damaged. Our personnel also returned in good health. The Coast Guard lost one man through pneumonia and had several others in hospitals at Huntington, West Virginia, and Portsmouth and Cincinnati, Ohio.

On this assignment, for the first time, I came in direct contact with the Red Cross and had an opportunity to appreciate fully the efficiency of that organization. The personnel sent out on this type of work come from the Disaster Relief Section. They are people who have volunteered for disaster relief work and are chosen for their special ability and experience. They know how and where to contact government and local organizations for supplies, equipment and personnel and how to coordinate the various units into a smooth working system.

The entire staff at Ashland put in from 16 to 18 hours a day and in an incredibly short time had made a survey of the supplies available, had arranged for a concentration warehouse and distributing center, had organized the feeding and housing centers and were cooperating with the local health officials in making a sanitary and health survey, and were taking steps to prevent the occurrence and spread of contagious diseases.

The local organizations did splendid work in evacuating and caring for the refugees before the arrival of the Red Cross but these organizations are dependent entirely upon volunteer aid, which generally disappears as soon as the novelty of the situation wears off. They could not be expected to function with the smoothness and efficiency of an organization, such as the Red Cross, which is organized especially for such emergencies.

My personal opinion is that the American Red Cross is in a better position to handle disaster relief than any other organization I could name. They are unhampered by regulations and red tape and are in a position to make available immediately, under one efficient management, all of the resources of the federal, state and local governments; and to secure the best cooperation from corporations and local groups in a position to serve.

WIRE DRAG SURVEYS, PACIFIC COAST, 1934 - 1937

I. E. Rittenburg, Hydrographic and Geodetic Engineer
U. S. Coast and Geodetic Survey

Foreword by Commanding Officer of Ship GUIDE;

The results of the wire drag work along the Pacific Coast during the past four seasons have proved conclusively that the best hydrographic surveys in such areas are not complete until supplemented by wire drag work. In this time 275 shoals have been located by a drag in areas covered by modern hydrographic surveys. At least 75 per cent of these shoals were found in areas where little or no indication of their existence was given by the hydrographic development.

Certainly, there is no more important function of the Bureau than the location and charting of shoals which are dangerous to surface navigation. Had a vessel hit one of these shoals, since located by the drag in an area covered by modern hydrographic surveys, the value of much of the inshore hydrographic work of the survey might have been open to question and had such an accident resulted in the loss of a ship with possible loss of life the monetary loss alone would undoubtedly have been greater than the cost of the entire work of this project. One time in a discussion of the courses usually followed by steam schooners I said to one of their captains, "I should hesitate to follow that track with the broken ground shown on the chart so close to it." He replied, "Even though there is broken ground shown, there are no charted dangers for my vessel and as it has been surveyed, I know it is safe." This usual expression of faith in the accuracy and thoroughness of our work, I am sure we all wish to maintain; and it is quite evident that the assurance of clear channels in Pacific coastal waters can be obtained only through supplementing the usual hydrographic surveys with wire drag work. Lieutenant Rittenburg describes in the following article some of the interesting features, as well as the vicissitudes, of the past several seasons' work with the wire drag on the Pacific Coast.

F. H. Hardy, Commanding Ship GUIDE.

The project of wire dragging the Pacific Coast of the United States was begun by the U. S. Coast and Geodetic Survey in 1934 with the Ship GUIDE.

On the Pacific Coast, perhaps more than in any other locality, weather is a predominant factor in the progress of wire dragging. This is due to the prevalence of wind with resulting heavy swells, and the frequency of heavy fogs. Rough seas create a doubt as to effective depths dragged; preclude proper clearances over the bottom and shoals; and jeopardize the safety of personnel when handling gear. When the sea is calm, fog frequently obscures signals and makes progress impossible. In most localities weather is not such an important factor in wire dragging as on the Pacific Coast, where it can be stated conservatively that adverse weather results in a loss of two thirds of the working days. Thus maximum results must be obtained in a minimum of time.

The necessity for wire dragging this stretch of coastline arises from the fact that northbound steamers, by hugging the coast, obtain considerable shelter from the heavy northwest winds and seas prevalent during the late spring and summer months. They also have the advantage of favorable current. At present, this route is fraught with uncertainty and danger because of the broken character of the sea bottom, and the high probability of pinnacle rocks not discovered. The program of wire dragging, when completed, will eliminate this uncertainty by indicating to masters of vessels how closely the shore may be approached, and will remove a great

deal of the danger by locating and charting the least water on hazards discovered.

The importance of proving an area clear of obstructions becomes obvious. Once an area has been dragged the master of any vessel can feel sure that no undiscovered danger remains shoaler than the effective depths dragged. It is just as important to drag a doubtful area to prove it clear as it is to find some unreported danger.

Many pinnacle rocks have been reported by masters of vessels along this stretch of coast, but there has always been a great deal of uncertainty regarding the positions and even the existence of these reported dangers. Consequently, they have been charted with the appropriate "Position Doubtful" or "Existence Doubtful" symbol. The area is undoubtedly one of pinnacle rocks, and a hydrographic survey, even though well done and with close spacing of lines, might fail to disprove a reported danger. There can be no doubt, however, as to whether or not a pinnacle previously reported actually exists once an area is wire dragged. Should a pinnacle rock be reported at a later date, in an area previously wire dragged, such surveys will be of considerable aid in the proper evaluation of the report.

The wire drag surveys were extended as close inshore as possible, and offshore to about the twenty or thirty fathom curve, depending upon the character of bottom and shoreline. In most cases the seaward limits were about one and one-half to two miles offshore.

The survey is now in its fourth season, 1934 to 1937 inclusive. Prior to the 1937 field season, wire drag surveys had been made off several sections of the coast, amounting in all to 325 nautical miles in four separate areas. The work was begun near Point San Pedro, California, just south of the entrance to San Francisco Bay, and extended southward to Port San Louis in San Luis Obispo Bay. This did not include the area off the sand beaches in Monterey Bay, where wire dragging was considered unnecessary. It represents 180 linear miles of wire drag surveys. The dragging of the coastal waters about the shore of San Clemente and Santa Catalina Islands in southern California represents another 86 nautical miles. With the exception of about six miles south of Rockport, California, the continuous section from Punta Gorda to Fort Bragg represents an additional 55 miles. The fourth area dragged was in the vicinity of Chetco Cove, Brookings, Oregon, and included about 4-1/2 nautical miles.

Two 65-foot towing launches with sleeping accommodations for fifteen men and one 30-foot tender comprised the floating equipment. Sturdy launches are required because of the exposed areas and lack of good anchorages. The wire drag equipment varies little from that specified and described in Special Publication No. 56,* except for the large end buoys. It was found that an old style 55 gallon water boiler was identical in buoyancy, proved easier to handle, and offered less resistance to the water than the end buoys shown in Special Publication No. 56. No towing bridle is used, and the ground wire is connected directly to the towline. Dual control has been used throughout the survey, i.e., each of the towing launches takes its own position and locates its own end buoy. Drag lengths as long as 12,000 feet have been used successfully. For the longer lengths of drag it has been found that a 65 per cent effective width gives best results. An effort to get more effective width increases lift and decreases speed. Had the customary practice of dragging a strip with very few differences in lengths of uprights been followed, there would have been much less progress, as adverse weather conditions on this coast make it practicable to secure satisfactory results on comparatively few days. The

* Hawley, J. H., "Construction and Operation of the Wire Drag". U. S. Coast and Geodetic Survey Special Publication No. 56.

depths vary from 24 to 30 feet inshore to 30 fathoms offshore and it is necessary to cover as great a width as possible in one strip. To do this, the uprights are set at depths ranging from 20 to 85 feet, with a maximum difference in the lengths of uprights of adjoining sections not exceeding twelve feet, i.e., 2-1/2 per cent of the width of section, which is either 400 or 500 feet.

During the season of 1937, two widely separated areas were wire dragged, one off Cape Blanco, Oregon, and the other off Cape Mendocino, California.

The Cape Blanco and Port Orford area was wire dragged at the request of the U. S. Engineer Corps, because of a proposed breakwater to be built at Port Orford. Although this area had been resurveyed recently by ordinary hydrographic methods, a total of 56 heretofore unknown rocks were located by wire drag. Many were relatively unimportant, but several were hazardous, and one was extremely dangerous to coastwise shipping. The latter, (a very small pinnacle, very difficult to locate even after the drag had caught upon it), was found about 50 feet off the end of the lumber company's dock at Port Orford, with a least depth of 16-1/2 feet over it at mean lower low water. Whether or not this rock would ever have been found by ordinary hydrographic methods is doubtful. It is a remarkable fact that vessels drawing 20 feet or more have been maneuvering around it for several years without hitting it, since its position is such that in mooring to the dock, a vessel turning around on its anchor must pass over the rock. Acting on the findings of the Coast and Geodetic Survey the lumber company, which ships from Port Orford, blasted this rock out immediately.

Another interesting discovery at Port Orford was a shoal with a least depth of 24 feet. Several leadsmen reported that their leads felt as though striking wood on the bottom. Thinking that there might have been a wreck at this point, inquiries were made of several of the "old timers". While none remembered any wrecks or wreckage, the inquiries soon became known and imaginations ran riot. Of the many theories evolved, one concerning a ship laden with treasure became so popular that before long reports made it a fact. Newspapers along the west coast published an item to the effect that this obstruction was the Ship SOUTH FORK, lost with all hands and without trace. This, of course, was all imagination, as no one has ever investigated the obstruction. The most logical assumption seems to be that it is part of a log raft, or a water-logged and submerged mooring buoy.

Upon completion of the surveys off Cape Blanco, the wire drag operations were moved to the vicinity of Blunt's Reef, off Cape Mendocino, California. Practically all shipping, whether north or south bound, makes Blunt's Reef Lightship a turning point. For this reason, this area is one of the most important and congested on the entire coast. Because of the heavy seas and fog prevalent for a large part of the year, and the broken and rocky character of the bottom with numerous dangers inshore from the lightship, it is also one of the most hazardous.

Until the latter part of the nineteenth century, a great many northbound ships used the passage inside Blunt's Reef to avoid the heavy seas encountered on the stretch from Punta Gorda to around Blunt's Reef. However, the frequency of accidents due to vessels striking rocks, as well as the uncertainty as to whether or not these dangers were charted, resulted in underwriters refusing to insure cargoes and vessels using this passage. Anyone familiar with this stretch of coast knows that a safe passage inside Blunt's Reef would be a boon to the smaller steam schooners and yachts beating north against the prevailing heavy northwest winds of summer. The wire dragging of this area, in order to prove once for all whether or not a safe channel exists, was therefore considered of primary importance. The greater portion of the Blunt's Reef area has now been dragged, and a total of 33 previously unknown pinnacle rocks located. The accompanying illustration demonstrates graphically that several of

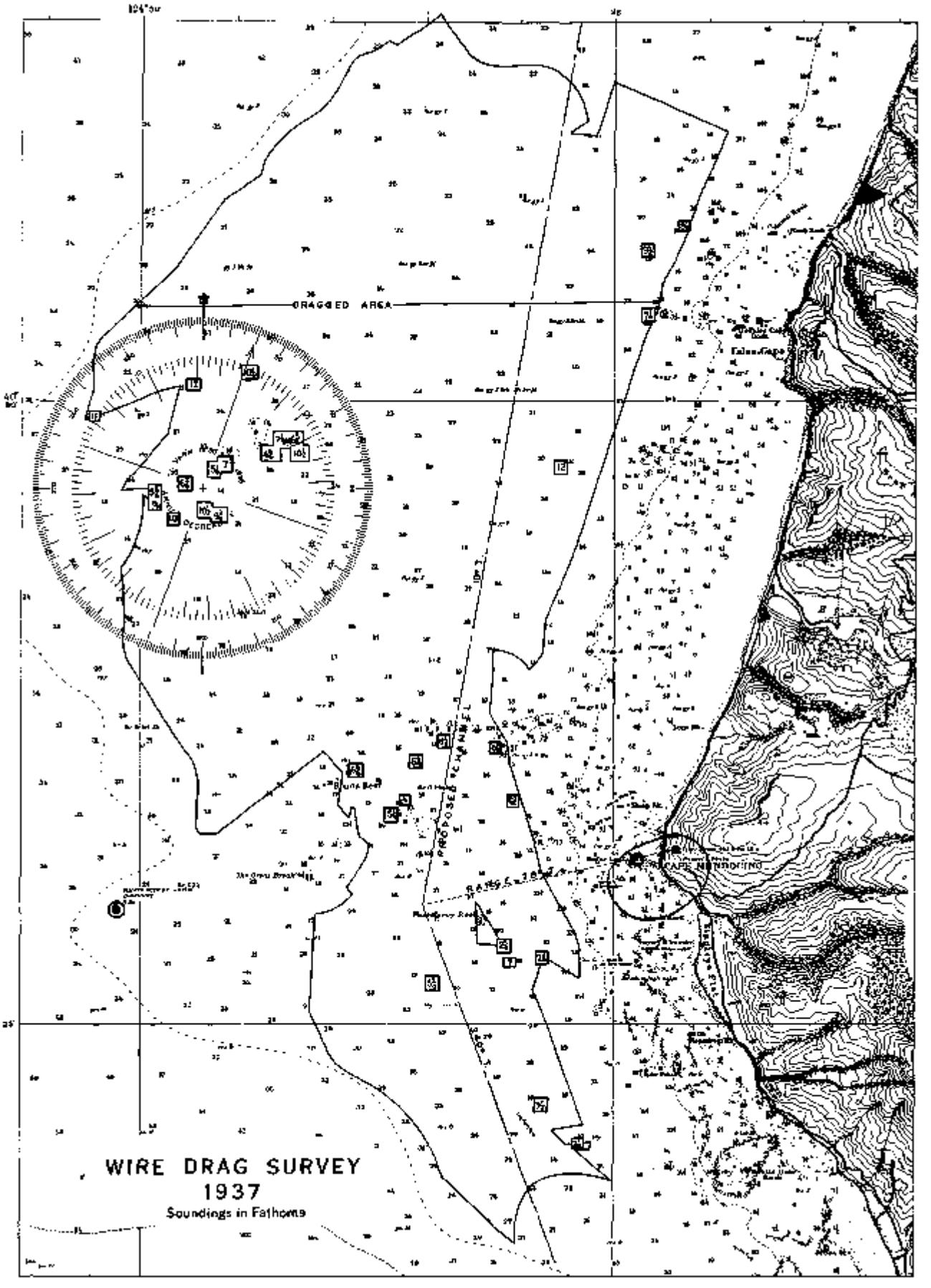
DRAGGED AREA
PROPOSED CHANNEL
WIRE DRAG SURVEY
1937
Soundings in Fathoms

these pinnacles constitute grave present dangers, and many more might prove to be hazardous if the new channel, mentioned later, is used.

The group of rocks lying three to four miles northward of Blunt's Reef Lightship is on the direct steamer route to Humboldt Bay. Of this group the 28-foot rock is, of course, the most dangerous. Considering the prevalent heavy swells, one wonders why, as yet, no vessel has reported striking it. The 20-foot shoal (appearing as the southernmost in the illustration) is definitely hazardous, since many of the northbound steam schooners parallel the shore to this vicinity, turn out, head for the lightship, and pass between the lightship and Blunt's Reef.

An inside channel has now been dragged to a depth of 35 feet or more, showing a safe passage at least one mile in width. Most of the unknown dangers found would not have been located by ordinary hydrographic methods, regardless of the spacing of lines used. This may be seen on the accompanying illustration, which is a section of U. S. Coast and Geodetic Survey Chart No. 5795, where many of these rocks are shown rising from deep water without indication. It is believed that, if buoys are placed at strategic points, a safe passage exists for vessels drawing up to 24 feet. Vessels able to use this channel would save from 4 to 8 miles in distance, depending upon destination, and would avoid the more exposed outer area. The proposed channel is indicated by dashed lines on the reproduced chart section.

WATCH THE NOTES IN THE SOUNDING RECORDS

When the smooth hydrographic sheet is plotted in the field there is often a tendency to overlook the importance of notes in the remarks column of the sounding records. These notes represent original entries made while the survey is in progress and should be given considerable weight in the final evaluation of the data. Where such notes conflict with other data, the plotter should be put on notice that something may be wrong somewhere and that a re-examination of all the data involved is necessary. Occasionally important disclosures result.

A case in point arose in connection with the review of a recent hydrographic survey. A 2-1/2 fathom shoal had been plotted on the smooth sheet by the field party. This shoal sounding was obtained in mid-channel on a regular sounding line, where a former survey showed 4-1/2 fathoms. Several positions subsequent to the 2-1/2 fathom sounding, the following note appeared in the remarks column opposite a detached 3-4/6 fathom sounding:

> "Least depth obtained after 30 minutes spent in running radiating lines on temporary buoy dropped on shoal."

The plotter failed to grasp the significance of this note and without re-examining the plotted 2-1/2 left it on the sheet. The result was that the descriptive report carried an elaborate description of this shoal which had been "reduced by the present survey from 4-1/2 fathoms to 2-1/2 fathoms." The situation was further complicated by the fact that a hand correction had been made to the charts and a notice to mariners issued based on the Coast Pilot notes submitted by the Chief of Party including the same information.

In the office review the discrepancy between the note and the 2-1/2 fathom sounding as at once apparent. An examination of the latter disclosed an error of 1 fathom in the reduction of the original sounding for tide, the corrected depth being in close agreement with the note.

GRAVITY OBSERVATIONS AND THEIR USES

Carl I. Aslakson, H. & G. Engineer
U. S. Coast and Geodetic Survey

The average person, unfamiliar with gravity observations, generally understands the phenomenon of falling bodies to be governed by the universal law of gravitation. Many other interesting, significant, and relatively simple facts concerning gravity are frequently overlooked. For example it is not commonly known that gravity varies with latitude, the attraction being greatest at the poles and least at the equator at the same elevation; and that the same mass, if weighed on a spring balance, will have a different weight at the pole and the equator. It is not commonly known that gravity varies even at the same latitude on the earth's surface. These variations of gravity if measured and studied, will help the scientist to make accurate determinations of the shape of the earth, to correlate geological knowledge of the earth's crust and interior. Systematic observations of these variations might some day help the scientist to predict earthquakes. It is not commonly known that an aviator weighing 200 pounds at sea level would weigh only about 199-1/2 pounds at an elevation of 25,000 feet, nor that an object moving toward the east will weigh less than when moving west. The reasons for these phenomena will be considered in the following paragraphs.

The reader may have gained an impression from the foregoing that the absolute value of gravity varies by large amounts. It should be understood that the maximum range of gravity variations over the surface of the earth only amounts to about 1 part in 150. However, since modern instruments enable us to determine relative variations in gravity with an accuracy of about 1 part in 1,000,000, it becomes apparent at once that variations of significant amounts are measured. Actually it is not the force of gravitational attraction which is measured but the acceleration which this force produces, because the acceleration more readily lends itself to experimental determination and the mass which enters into the definition of force is cancelled out in the final result. It should be remembered that the expression "values of gravity" means values of the acceleration due to gravity.

The unit of gravity is the "gal", a name derived from Galileo, the famous Italian physicist and astronomer. This unit is numerically identical with the metric unit of force, the dyne. If the value of gravity at a point on the earth's surface is 980 gals, it means that freely falling bodies in a vacuum are accelerated 980 centimeters per second for each second of fall; or if expressed in the English system, they would be accelerated at the rate of 32.2 feet per second for each second of fall. The value of gravity at sea level varies over the earth's surface from about 978.0 to 983.2 gals, the average being about 980 gals. It is usually measured to the third decimal place or to milligals, one milligal being 1/1000 of a gal, although some types of instruments justify carrying the results to the fourth decimal place.

The principle causes of gravity variations are (1) the rotation of the earth, (2) differences in the distance from the earth's center, and (3) the varying densities of the earth's crust.

If the earth were a perfect, homogenous sphere at rest there would be no variation of the gravitational attraction for a particle anywhere on its surface. However, the earth is not at rest, is not a perfect sphere, and is not homogenous. The earth rotates on its axis at a constant rate. A particle on its surface will tend to fly off due to the centrifugal force set up by the rotation. At the equator this centrifugal force is a maximum. It opposes and therefore diminishes gravitational attraction. As a particle is moved away from the equator toward one of the poles the effect of centrifugal force will diminish until it is exactly zero at either pole. Thus we have one variation of gravity with

latitude.

The rotation of the earth causes another variation in gravitational attraction. The earth, not being absolutely rigid, bulges at the equator from the effect of the centrifugal force, assuming the approximate shape of an ellipsoid of revolution, with the equatorial diameter greater than the polar diameter. According to Newton's law of gravitation, the attraction between two masses varies inversely as the square of the distance between their centers. If, then, we could consider the earth's mass as concentrated at its center of mass, the attraction of the earth for a particle on its surface should be greater at the poles than at the equator. Unfortunately the problem is not quite as simple as this. While we can not consider that the earth's mass is concentrated at the center of mass when dealing with the attraction for a particle on the surface, the problem can be solved mathematically, and the change in attraction caused by the earth's ellipsoidal shape can be computed. The centrifugal force and the change in attraction caused by the bulge combine in a resultant effect that is about one part in 190 greater at the poles than at the equator for the same elevation above sea level.

So far the shape of the earth has been considered as having the smooth surface of an ellipsoid of revolution. Actually the surface has bumps and hollows represented by mountains and valleys. Naturally the value of gravity as measured on the summit of a high mountain tends to be less than the value at sea level because it is measured at a greater distance from the center of the earth.

The last important factor in the variations of gravity is the varying density of the earth's crust. According to the law of gravitation the attraction between two bodies varies directly as the masses and inversely as the square of the distance between them. Therefore with abnormally dense or abnormally light crustal material in the immediate vicinity of an observer, the observed value of gravity will be abnormally high or abnormally low respectively.

The Significance of Gravity Variations

One of the important results derived from gravity variations is the determination of the shape of the earth. From the foregoing paragraphs the factors causing gravity to vary may be summed up as follows:

(1) The forces due to rotation.
(2) The elevation above sea level.
(3) The ellipsoidal.
(4) The varying density of the earth's crust.

It is apparent that the effect due to the first two of these factors may be calculated. We know the rate of rotation of the earth and therefore can readily compute the effect of centrifugal force for any latitude. We can also determine the elevation of a point above sea level and can compute the change in gravity from the sea level value for any elevation. This leaves two unknown factors: (1) the variation due to the earth's shape, and (2) the variation due to the different distributions of density in the crust. It is apparent, that if we can find a method of removing the effect of local variations in density the only remaining variable is the one due to the shape of the earth. This actually is the procedure followed. A sufficiently large number of widely distributed gravity stations is used so that the assumption can be made that those variations in gravity observations caused by local variations in density will average out. In other words, it is assumed that for each point where the density is greater than average there is one where the density is less than average by the same amount. This is a safe assumption where the number of stations is very large and the distribution is suitable. It is plain that if a formula is derived for an ellipsoid of revolution which will fit closely the net values of gravity for all these points after they

have been corrected for elevation and centrifugal force, this formula should closely represent the sea level surface of the earth.

Actually the earth's shape deviates from that of an ellipsoid of revolution because the large land masses cause deviations in the direction of gravitational attraction, or "deflections of the vertical". In other words the water level surface is tilted upward near the borders of the continents and is depressed over the ocean deeps. Likewise, the sea surface, if it could be extended on through a continent as by a sea level canal would bulge upward near the center of the continent. The exact amounts of these humps and depressions are not yet known because of the lack of a sufficient number of gravity observations. It has been estimated however that they may amount to as much as 100 meters under the great mountain ranges or in the centers of large oceans. The shape of the earth as represented by this water level surface is known as the geoid. Speaking precisely, the surface of the sea, even when calm and at its mean tidal range, is not that of an ellipsoid concentric with the actual earth. It is a surface of equilibrium, distorted from that of the ellipsoid by the gravitational attraction of the lithosphere, and it varies with the form of the crust and density of the rocks beneath. Except in geodetic measurements no allowance is made for the distortion of the surface. It is hoped that eventually sufficient world wide gravity observations will be made so that the deviations of the geoid from the ellipsoid may be computed.

Gravity as an Aid to the Geologist

With the shape of the earth known, it is apparent that a gravity formula may be developed, expressed in terms of latitude, which will give a theoretical value of gravity at sea level for any point on the surface of the earth.

The question then arises, "Why continue to observe gravity if it can be computed"? The answer lies in the fact that gravity values vary with changes in crustal density, and therefore the theoretical value is only an average value which may be higher or lower than the observed value. The theoretical value of gravity as obtained from the gravity formula for any station is corrected for elevation for purposes of comparison with the observed value. Certain other corrections, known as the topographic and isostatic compensation corrections are also applied as will be explained later. The difference, then, between the observed value of gravity and the theoretical value thus corrected is known as the gravity anomaly. Gravity anomalies may be either positive or negative in sign. They are positive when the observed value exceeds the theoretical value.

Since gravity anomalies are caused by differences in crustal density, it is apparent that a study of variations in crustal density may be made from gravity surveys. The importance of the use of gravity surveys in this manner cannot be over estimated. Dense material underlying an area will in general be revealed by positive anomalies, while light, sedimentary deposits will register as negative anomalies. By the relative variation of anomalies in intensive surveys over small areas, facts regarding relative densities and depths of materials in the crust may be deduced. Gravity surveys are of major importance in oil exploration where small relative variations in gravity are used to reveal salt dome uplifts or other oil bearing structures. As an illustration, let us suppose that in a survey of an area of a few hundred square miles a small area is found where the anomalies are distinctly negative with respect to the surrounding ones. This indicates a probability that abnormally light material, such as is found in certain oil bearing structures, exists under the negative area. When such observations are supported by surface geological indications and other geophysical methods employed by the oil geologist, the drilling of an oil well in this area is apt to prove a profitable venture. This part of geophysical science is still in a stage of development, but rapid progress is being made in

interpreting the results of such geophysical surveys.

It may be noted that no reference has been made heretofore to the part isostasy plays in the field of gravity and geophysics. Isostasy may be defined as the principle that the outer crust of the earth is in equilibrium above an "isostatic surface" or a surface of equal pressure which is at an approximate depth of 100 kilometers below the sea level surface of the earth. A complete discussion of this principle is beyond the limits of this article but those interested may find excellent explanations of isostasy in Special Publications Nos. 10, 40, and 99 of the U. S. Coast and Geodetic Survey, or in "Isostasy" by William Bowie, E. P. Dutton & Company, New York. When the computed corrections for isostatic compensation are applied to gravity observations the anomalies are greatly reduced. This fact is generally accepted as one of the two major proofs of the theory of isostasy, the other being the great work of Hayford on deflections of the vertical.

In determining the corrections for topography and for isostatic compensation the computer uses a method whereby the entire surface of the earth is divided into zones with respect to the gravity station. The average elevation of each zone is estimated using zone templates on the best available maps. Tables have been computed, whereby, with the elevations as arguments, both the topographic and the isostatic compensation corrections may be obtained. The labor involved is not so great as it might seem. The corrections for many of the more distant zones may be interpolated from previously determined corrections for adjacent gravity stations with entire safety.

The principle of isostasy gives a further significance to gravity observations. When extremely large anomalies are observed in a particular area, such anomalies may be caused by a distinct lack of isostatic equilibrium in the area as well as by an area of excessively dense or light material near the surface. In other words, a column of material extending downward to the depth of compensation may have a different weight than a similar column in an adjacent area. This lack of equilibrium can be maintained only because the crust in that vicinity is sufficiently strong to withstand the stresses due to the lack of equilibrium. If, at any time the stresses become greater than the strength the crust can withstand, rupture will take place. This rupture may cause great surface disturbances or earthquakes. In short, accurate gravity surveys well distributed over the surface of the earth may reveal areas in which earthquakes are likely to occur. It is not beyond the realm of possibility, that the prediction of major earthquakes may be facilitated by gravity observations.

Methods of Observing Gravity

There are two general classes of gravity instruments: (1) pendulum instruments, and (2) spring instruments. Gravity observations are of two classes: (1) absolute measurements, and (2) relative measurements. Absolute measurements of gravity are very difficult to make as they require an extremely accurate knowledge of the mass and the length of the pendulum. Since relative values are of prime importance in all geophysical fields, and since the absolute making of accurate measurements is so difficult, the old International Geodetic Association recommended the adoption of the absolute value of gravity as determined at Potsdam, Germany, and most countries now have established their base gravity stations by relative determinations from Potsdam.

The use of pendulum gravity instruments for relative determinations is based upon the principle that the period of the pendulum, or the length of time it requires to make a single beat, varies with changes in gravity. Thus the period of a pendulum may be determined at a base station where the value of gravity is known, and again determined at a point where the gravity is not known. From a comparison of the two periods and the known

value of gravity at the base station, the gravity at the new station may be computed easily by a simple formula.

Spring gravity instruments, commonly known as gravimeters, are of many different types, but all of them are based upon the principle that the distortion of the spring varies with the attraction of gravity. These instruments, of course, can only be used for relative determinations of gravity.

Brown Gravity Instrument
Pendulum receiver, in which the pendulum is swinging, is set in a hole in the ground and surrounded by about 60 lbs. of plaster of Paris. The rectangular box above contains the photoelectric device for recording the pendulum beats.

The Brown Pendulum Apparatus, named after the late Lieutenant E. J. Brown, who devised and perfected it, and now employed by the Coast and Geodetic Survey, is a pendulum instrument. The pendulum is of invar metal and swings on an agate knife edge. The beats of the pendulum are recorded on a chronograph through a system employing a photoelectric cell, amplifier, and relays. The accurate time necessary in this work is obtained by recording, by radio, the Naval Observatory time signals directly on the same chronograph record as that on which the pendulum beats are recorded. The exact number of beats of the pendulum is determined over a six-hour period. Since the six-hour interval can be determined with a probable error of about ± .002 seconds of time it is apparent that a very accurate determination of the period of the pendulum can be made.

The best of the spring instruments probably have smaller probable errors than the pendulum instruments, but they can be used only for relative determinations at points short distances apart, whereas the distances over which the pendulums may be transported are unlimited. There is still room for improvement in both types of instruments, and there are indications at present that a combination of both types of instruments will be used in the near future in the gravity survey of an area.

Several advances in field methods and equipment have been made during the past year. The most notable of these was the use of two sets of Brown gravity apparatus to obtain two simultaneous determinations of gravity at each station. The use of a house trailer, in which much of the equipment, such as the radio, chronograph, amplifiers, batteries, and chronometer are mounted has done much to offset the additional labor involved in using two Brown instruments.

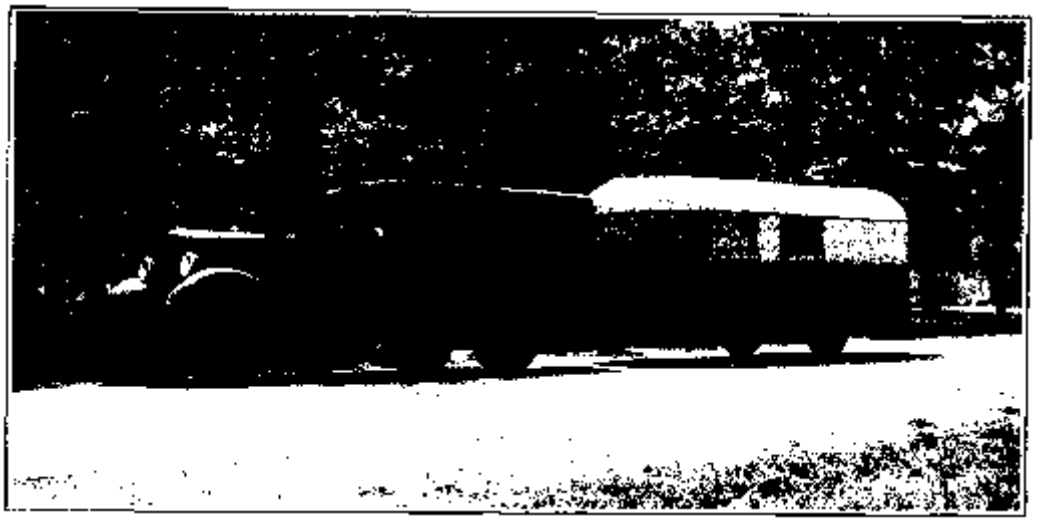

Truck and Trailer of Gravity Party

Radio receivers, amplifiers, and chronograph are permanently housed in the trailer, which also provides office facilities.

* * * * * * * *

Contemplated Improvements to Instruments

At the present time a study of pendulum instruments is being conducted with a view toward revision of the Brown instrument for the purpose of obtaining greater accuracy and speed. It should be remembered that the final result sought in pendulum observations depends upon exact determination of the period of the pendulum, that is, the length of time needed for the pendulum to make a single beat. The period can be found if an accurate method for recording time is accomplished for an even number of the beats, when these beats are made under precisely similar conditions, or when corrections can be applied for conditions which are not similar.

The development of the crystal chronometer by the Bell Research Laboratory is a marvelous forward step in securing the exact time needed for gravity work. Rigorous field tests by Coast and Geodetic Survey observers have indicated that this chronometer will maintain a rate under field conditions that is accurate to within about 1 part in 10 million.

Errors in gravity measurements with pendulums have been partly due to lags in relays. Photographic recording can be applied to eliminate the mechanical relays. The time is recorded by interrupting a beam of light by a rotating arm on the synchronous motor of the crystal chronometer. The pendulum beats are recorded on the same record through the use of photo-electric tubes.

Temperature corrections, always uncertain, probably can be reduced to a minimum by thermostatic heat control, which will maintain a specified temperature within about 0.01°C. Such temperature control will permit the use of bronze pendulums which are more stable than the invar ones now in use. It is essential that non-magnetic pendulums be used in multiple-pendulum instrument.

At least three pendulums probably can be used in a new instrument. All three pendulums will be mounted in the same plane, and upon the same support. The two outer pendulums will be arranged to swing in opposite phase isochronously. The center pendulum will not be swung for period measurement, but it will record any lack of isochronism of the outer pendulums by showing an amplitude which will increase in amount as the outer pendulums are thrown out of phase. This type of instrument has been used

with signal success by Dr. Vening Meinez, of the Dutch Geodetic Commission in his special gravity instrument for observations at sea. The use of three pendulums with two swinging in opposite phase, eliminates the necessity for determining the movement of the pendulum case by means of an interferometer as now is necessary with the Brown instrument.

The Brown gravity instrument was a great step forward in pendulum gravity instruments, in that it employed a photoelectric device to record the pendulum vibrations. This permitted the case to remain sealed during the entire time the instrument was in the field. The pendulums were raised, set in motion, stopped, and lowered by an ingenious mechanical device invented by Lieutenant Brown. Previously it had been necessary to remove the pendulum from the support each time the instrument was transported and to reinstall it upon arrival at the new location. When it is realized that the period of the pendulum can be changed appreciably by so small a mass as a speck of dust clinging to it, it is plain that this handling caused small errors. It was therefore necessary to take many observations with different pendulums at each station to obtain the desired accuracy. Observations usually extended over two days while with the Brown instrument it is necessary only that they be extended over 6 hours to obtain somewhat greater accuracy than formerly was obtained by the longer observations.

Typical Gravity Station
Campbell, Alabama.

Pendulum instruments are housed in tent and connected by cable to permanent instruments in the trailer.

The Coast and Geodetic Survey has conducted gravity surveys and investigations for a number of years primarily for the purpose of development of more accurate formulae to express the shape of the ellipsoid. These formulae are necessary in the reduction of precise surveys, such as the first order triangulation and leveling nets which have been extended over the country to provide a fundamental and accurate datum for all engineering works and detailed surveys. The rapid development of geophysical prospecting for oil and minerals within the earth's crust has revealed an immediately practical use for standard gravity stations at frequent intervals over the country. The correlation of gravity observations with geological and geophysical data was studied extensively by Hayford, and later ably carried on by Bowie. The great contributions to the science of geophysics of these outstanding men are well known and appreciated by all geologists and geophysists. The concise exposition of the fundamentals underlying isostasy and the quantitive proof of many of the basic hypotheses by these two men, have resulted in the general acceptance of isostasy as a principle rather than a theory. Bucher, for example, in his "Deformations of the Earth's Crust," published in 1936, devotes 37

pages to a discussion of the "law of isostatic compensation", and concludes "that the isostatic behavior is a reality, causing all changes in the distribution of rock materials to be followed by changes in elevation so far as they tax the crust beyond its strength. But isostasy does not create, it only modifies."

Here again we find the results of surveys which originally were made for the development and improvement of geodetic methods, acquiring added significance and yielding immediately practical advantages in industrial fields. In all of our work, it has been a great satisfaction to the mathematicians and engineers of the Coast and Geodetic Survey to realize the fundamental soundness of the policy to which the employees of the Survey have adhered for more than a century, - a continual search for the ultimate limit in accuracy of instrumental observation and mathematical reduction of the observations. Eric Temple Bell has called it the "Search for Truth." It is a heritage which has a deep significance to us all, as well as to the engineers and scientists of the country. We cherish it.

RAR - 1856 MODEL

Radio acoustic ranging was, of course, impossible in 1856. Guglielmo Marconi had yet to make his entrance on the mortal scene. Acoustic ranging, however, definitely was used in the survey of Cortes Bank, some 95 miles off the coast of southern California, in the above mentioned year.

On August 3, 1856, the U. S. Coast Survey Schooner EWING anchored on the bank and determined its position by astronomical fixes. The Coast Survey Steamer ACTIVE thereupon took up the burden of actual surveying, running sounding lines radiating from the schooner. The control was based upon bearings and distances from the EWING.

In the sounding records of the ACTIVE, the following notations are found:

"At 5:25 reset and put over patent log.
At 7:25 schooner fired for distance. (Time for sound 26 seconds.)
7:26. End of line. 5-7/8 miles by patent log.)"

Now for a bit of explanation. The records do not go into details concerning the "firing for distance" but there is little doubt that a piece of small ordnance was fired on the anchored schooner and the time observed on the moving steamer between the flash and the ensuing sound.

Assuming a value of 1100 feet per second for the speed of sound, the distance is computed to be 4.7 nautical miles which is in fair agreement with the distance plotted on the survey. The difference between the distance by patent log and the distance by sound is accounted for by the fact that a dog-leg course was run between the start and finish of the sounding line.

It is interesting to note that in 1923, just prior to the advent of radio acoustic ranging, another novel method of control was used in the survey of this bank. The U. S. Coast and Geodetic Survey Ship DISCOVERER, H. A. Seran, commanding, was anchored near Bishop Rock at night and the beam from her searchlight directed vertically. The light beam was then cut in from triangulation stations on San Clemente Island. From the position obtained, six survey buoys were subsequently located by full speed log runs and celestial azimuths. The resulting buoy control made possible a survey of the bank which is in excellent agreement with the latest RAR surveys.

DIVISION OF TIDES AND CURRENTS

A Description of Its Work

Paul C. Whitney, Hydrographic and Geodetic Engineer
Chief, Division of Tides and Currents
U. S. Coast and Geodetic Survey

A field officer, when sending to the office certain tidal or current records, might well ask what becomes of them and how are they utilized.

The Division of Tides and Currents is that part of the office organization to which all such records go, not only records originating in our own field service, but similar records from any activity, whether another federal bureau or private institution or from a foreign source.

The Division is organized into several units, viz., an Assistant Chief, who is also Chief of the Section of Field Work; a Section of Tides; a Section of Currents; a Section of Predictions; a Section of Datum Planes; and a Research Section. Each section handles the work naturally falling to it.

The tidal work of the Survey can be classified under the following heads; (1) Continuous tidal observations. (2) Short series of tidal observations. (3) Tidal current observations. (4) The prediction of tides and currents and publication of annual tide tables and current tables and tidal current charts. (5) The computation of elevations of tidal bench marks and the publication of descriptions and elevations of same. (6) Research dealing with all phases of tides and currents.

The planning of the field work in tides is done after consultation with the various section heads and the Chief of the Division.

The primary tide stations, which constitute the backbone of the tidal work of the country, are located at strategic points along the coast and determine the basic elevations of the various tidal planes. New primary stations are established when the need for them seems to be indicated. Each short series of observations is reduced to mean values by comparison with the observations at a standard station of suitable tidal characteristics. The operation and maintenance are directly under the Section of Field Work, except when they are located near the field stations of the Survey.

When hydrographic surveys are contemplated by the Division of Hydrography and Topography, the Division of Tides and Currents is informed of the localities with a request for instructions concerning the necessary tidal work. The areas are examined for previous tidal stations or bench marks. If there are none in the locality, the probable tidal characteristics of the locality are studied and the best locations of stations and the desired lengths of series are determined from the standpoint of the reduction of soundings, the future need for tidal datums, and the prediction of tides. The same is done for the location of tidal current stations, but, unfortunately, as current observations are much more costly to obtain and a great deal more time consuming for the party, there are fewer of them made by hydrographic parties.

In recent years areas have been selected for comprehensive tidal surveys by the Division of Tides and Currents. Recently such a survey of Barnegat Bay was completed and one in San Francisco Bay is in progress. Usually the program consists of the establishment of about twelve stations, using standard gages, which are occupied for about a year. Shorter series are observed at other places, using the portable gage. Bench marks established in connection with these stations are connected by first order levels to refer them to a common datum and also to the first order level net of the country. The results of such studies are of extreme value in accurately determining tidal datums and tidal characteristics of these bodies of water. Similarly, current surveys are made in selected areas,

and the most recent one is that in the Nantucket, Vineyard Sound and Buzzards Bay area.

As these many records come into the office from the field, they are registered in the Library and Archives and then routed to the division. Approximately 70 marigrams are received each month from primary and secondary tidal stations. From these the Section of Tides tabulates the hourly heights and the times and heights of the high and low waters. Running and total means of local sea level, tide level, high and low waters, inequalities, and intervals are kept. The complete tidal history of each of these stations is filed and the basic data derived are of utmost importance in engineering and scientific problems. The oldest continuous series is that for Presidio, San Francisco, California, which station was commenced in 1897.

All the tidal observations made by the hydrographic parties at stations established for the reduction of soundings are also taken care of in the Section of Tides. The number of such stations varies each year, but runs usually from 125 to as high as 450. At each of these stations the various tidal planes are derived. The work involved in these many short series is tremendous, and an added burden is put on the section when the records are not first class, due generally to the gage not being serviced at frequent enough intervals.

All current observations are routed to the Section of Currents for reduction. In this section the data derived from observed velocities and directions of the current are analyzed, correlated and compiled in various forms: For the direct use of commercial or engineering interests, or individuals desiring the information; for the use of the Section of Predictions in the preparation of Current Tables and Tidal Current Charts; for use in Coast Pilots, charts, and similar publications of other divisions of the Bureau; and for special publications on currents. These latter present complete observational data in tabular form, as well as convenient graphic representations and explanations of the details of the current movements, for important waterways in which comprehensive current surveys have been conducted.

After the Section of Tides and the Section of Currents have completed the determinations of the various planes and harmonic and non-harmonic constants, these data are passed along to the Section of Predictions and the Section of Datum Planes.

The Section of Predictions adapts this information for use in the Tide Tables and the Current Tables for subsequent years and maintains a card index of the values for each locality appearing in Table 2 of the Tide Tables and Current Tables. In this card index all the values derived from foreign sources also appear. This section computes the tide predicting machine settings for each year's predictions from the harmonic constants of the stations involved and as new data are received revises them as necessary. In this connection it is of interest to know that, excluding the time for computing the machine settings, a full year's predictions for one station can be made on the machine in about one day. Deriving the harmonic constants is a long and laborious job which usually consumes about six weeks of the time of a single mathematician working steadily at the problem. The machine, at present, is used in the prediction of tides for 62 places and currents for 29 localities. The Tide Tables for 1938 contain predictions for 98 ports. The additional predictions are furnished by foreign governments in exchange for predictions supplied to them by this Survey. This exchange prevents unnecessary work and is an example of useful cooperation between the countries concerned. In addition to the actual predictions, the machine is used in studies involving the modification of constants, especially when an observed series is shorter than desired and the predictions are somewhat in variance with the observed series. This is more apt to be true in current predictions, as the longest current series is seldom more than a month,

whereas the tidal series is usually at least a year in length. The machine is in use about 85 per cent of the time, and when all the predictions for the year are completed, the machine is thoroughly overhauled and cleaned by the Instrument Division. In addition to the daily predictions a large amount of the section's time is spent in keeping Table 2 of the Tide Tables and Current Tables up to date. This involves a great deal of reduction from the tide and current data furnished by the other sections, and also from data received from outside tidal authorities.

The Section of Datum Planes, upon receipt of the tidal planes referred to the tide staffs of the various stations, computes from the leveling records and elevations of the bench marks established at each station above the computed planes. When additional observations become available, recomputations are made of these bench mark elevations and a complete file of all bench marks and their relationships to staffs and planes is kept up to date. At almost all of our primary tide stations temperature and salinity observations are made by the observer each time he visits the station, and these are reduced and tabulated in this section. It also furnishes the tide notes appearing on the charts and checks all the tide reducers in the sounding volumes as they are received from the field. Mimeographed bench mark descriptions and elevations by states are being issued as rapidly as possible through the work of this section.

Research work relative to the reduction of tides and currents and harmonic analysis is the duty of the Section of Research, as are also the preparation of publications and manuals and the development of improved methods in the work. Correspondence that is obviously not within the purview of the other sections is taken care of by this section. It might be added that the general correspondence, involving all kinds of questions relative to tides and currents, is quite an item of work for the division.

In conclusion, it can not be over-emphasized that the tidal observations made by the hydrographic parties have a much larger use than the reduction of soundings. Actually the data derived from them are of use in all phases of tidal research and, therefore, the observations should be as accurate as possible and with a minimum of breaks in the records

THANK YOU, MAJOR HOLDRIDGE

Major H. C. Holdridge, A.G.D. and Major Van V. Shufelt, 26th Cavalry (P.S.) accompanied the party of Lieutenant R. F. A. Studds on the U. S. Coast and Geodetic Survey Ship FATHOMER to the west coast of Palawan, P. I., from January 18 to February 3, 1937. The following is quoted from a report made by them after their return to Manila, P. I.:

"The undersigned consider the reconnaissance, through the courtesy of the Coast and Geodetic Survey, to have had definite professional value. The opportunity to observe at close hand, the navigation of the ship; the difficulties of establishing triangulation stations on high mountains covered by dense underbrush, one of which required three and one half days to ascend although only a few miles distant; the lay-out in chain of a triangulation system, based on the main stations; the organization of working parties which must be self-sustaining for days at a time in an unknown country; the necessity for training for operations both on land and on the water; and in general, the detailed operation of an important governmental service was one rarely enjoyed by military personnel; and was of distinct military value. Two weeks of close contact with the personnel of the Coast and Geodetic Survey has resulted in an admiration and respect for the efficiency and high morale of officers and crew."

SONO-RADIO BUOY

Jack Senior, H. and G. Engineer,
Commanding Officer, U. S. Coast & Geodetic Survey Ship LYDONIA

The successful use of sono-radio buoys in radio acoustic ranging will eliminate two of the most objectionable features of this method of field work, namely station vessels on the Atlantic coast and dangerous landings on the Pacific coast. Descriptions of this buoy and the actual experiences of the field parties during its development have appeared in the pages of previous numbers of the bulletin. Lieutenant Commander Senior describes the experience he and his party have had during the 1937 season off the Delaware-New Jersey coast.

(Editor)

Sono-radio buoys were used successfully by the U. S. Coast and Geodetic Survey Ship LYDONIA during the 1937 season in place of station ships for hydrographic surveys off the New Jersey and Delaware coasts. They were used in both shallow and deep water, and in view of their manifest advantages from the standpoint of efficiency and economy will undoubtedly replace station ships in the future. The station ship, however, has been a necessary expedient in the development of the automatic sono-radio buoy.

Briefly, the general plan followed in executing the hydrographic surveys was as follows: The close-to-shore surveys were made on a scale of 1:20,000, using the shore signals for control. The inshore and intermediate areas of the continental shelf were surveyed on a scale of 1:40,000, using as control conspicuous shore objects located by triangulation and floating buoy signals located by sextant observations. An alongshore area with an effective width of about twelve nautical miles was thus surveyed using visual fix position control; and beyond the limit of visibility of the floating signals, the hydrography was extended offshore by using sono-radio buoys for control. Station ships were not used by the LYDONIA.

Sono-radio buoys were used successfully in shallow water, i.e., in depths less than twenty fathoms. In shallow water over the irregular bottom encountered this season, the LYDONIA's sono-radio buoys were effective for distances up to nineteen seconds* (approximately fifteen nautical miles). Over regular bottom, signals from greater distances were easily received and recorded; in the shallower areas, with intervening shoals, sound reception was more or less uncertain with a corresponding decrease in effectiveness of radio acoustic hydrography. Offlying shoals were sounded and developed using radio acoustic methods of control with an accuracy of position closely approximating that obtained by visual fixes. Automatic buoys at twenty different positions were used in this work. The LYDONIA was equipped with only three sono-radio buoys, and it is recommended that for greatest efficiency in the future at least one and preferably two additional buoys be carried on board as replacements. This party lost one buoy near the close of the season during a period of stormy weather, and there is the ever present possibility of buoys being struck and damaged or sunk by passing vessels. It is proposed to mount small flashing lights, operating either continuously or when actuated by propeller noises, on top of sono-radio buoys, anchored in or near steamer lanes.

* It is customary in radio-acoustic surveying to speak of distances in travel time, sound in sea water traveling approximately 8/10 of a nautical mile a second.

(Editor)

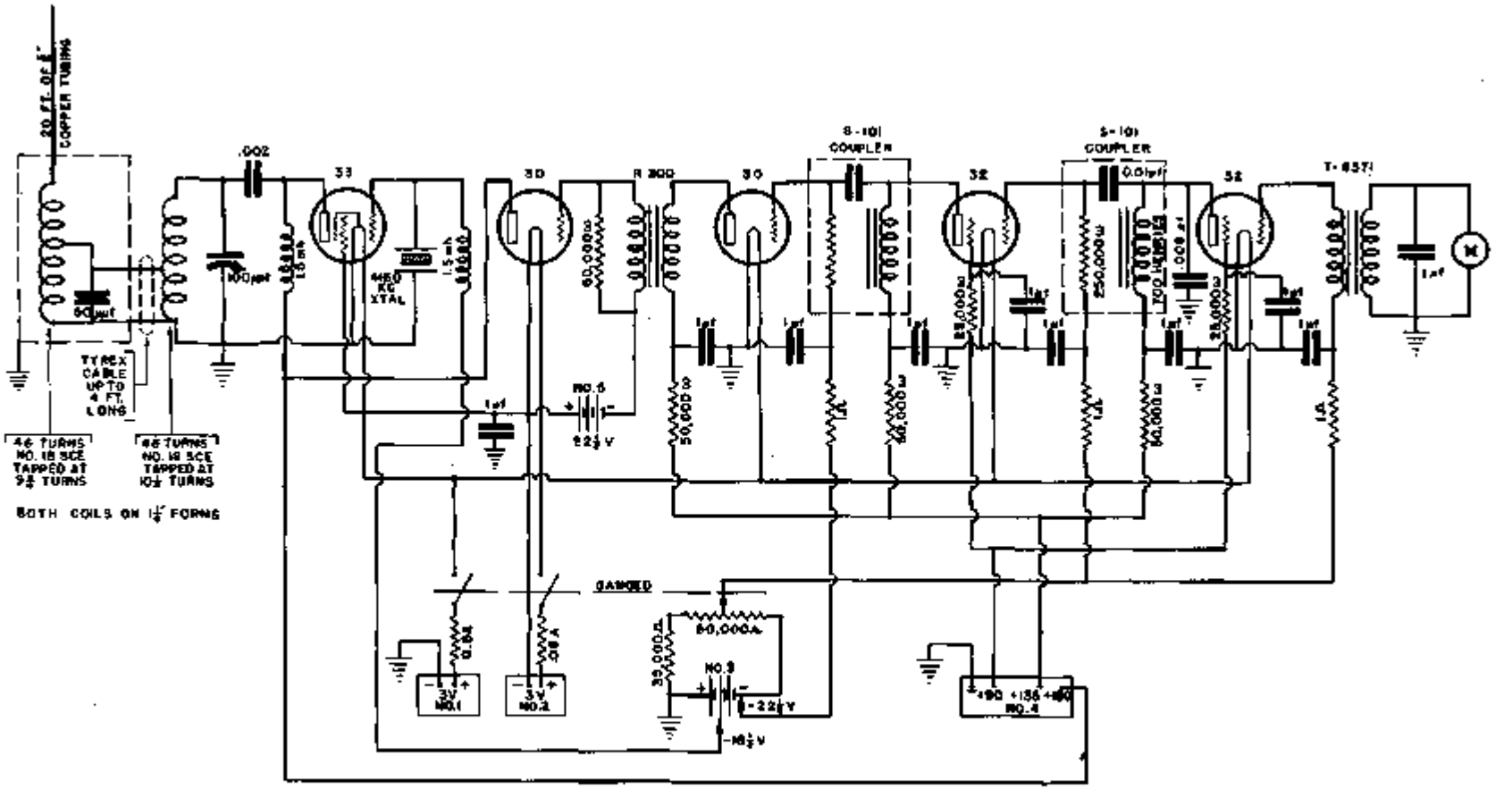

U.S. COAST and GEODETIC SURVEY

R.S. Patton, Director

SONO-RADIO BUOY CIRCUIT

Used by *Lydonia, Hydrographer* and *Oceanographer*

1936

The party on the LYDONIA also made the deep water survey of the continental slope and of the extension of the Delaware Submarine Valley. This survey was made on the scale of 1:120,000. Four sono-radio buoys, one of which was borrowed from the Ship OCEANOGRAPHER, anchored near the edge of the continental shelf, were used simultaneously during this survey. The positions of these four sono-radio buoys were determined by the party on the OCEANOGRAPHER by taut-wire measurements and sun azimuths. Hydrography was accomplished offshore by the LYDONIA out to the 1000 fathom curve, and in the vicinity of the Delaware Submarine Valley the survey was extended 40 nautical miles beyond the 1000-fathom curve into depths of 1,600 fathoms. This afforded a most critical test and at the seaward limits of the work radio-acoustic ranging was only moderately successful. Bomb returns were received successfully for distances up to about 60 seconds (approximately 50 nautical miles). The maximum distance signals were recorded from the sono-radio buoys was 72 seconds.

The apparent horizontal velocity of sound in sea water still remains a somewhat uncertain factor. In the shallow water over the "lumpy" bottom of the continental shelf and in the deep water of the continental slope with the many steep submarine gorges and extensive valleys, the true travel path of the primary sound wave is not known. Seasonal temperature changes are large and unpredictable. A careful study indicates that theoretical bottom velocities are not applicable. Experimental velocities were used in smooth plotting the season's radio-acoustic work, and, for the inshore and intermediate areas on the continental shelf where there were sufficient positions determined by returns from three buoys, the final results are accurate. At this point it is desired to emphasize the important advantage in the use of <u>three</u> instead of two radio-acoustic ranging stations. The use of at <u>least</u> three sono-radio buoys simultaneously makes for efficiency and increased accuracy. It certainly decreases the uncertainties in the velocities of sound. It "fixes" the probable velocity to be used for the area for the time of the survey. That the correct locations of the buoys are of primary importance, of course, is self evident. Theoretical velocities are corrected and used where applicable. Serial temperature and salinity observations are needed for correcting echo soundings and should not be omitted.

The successful use of sono-radio buoys to replace station ships on the Atlantic coast has been tested and proven. That this is indeed a great advance in our hydrographic methods, from the standpoint of economy and efficiency, is very evident. The release of our tenders from dangerous station ship duty is an important consideration.

Sono-radio buoys are entirely automatic, and like all things mechanical do require adjustment and attention. It is logically assumed that certain minor electrical defects and limitations will be overcome and the automatic features of these buoys progressively improved by Dr. Dorsey and his efficient assistants. Some of the improvements made in the proper functioning of the sono-radio buoys during the 1937 season may be mentioned briefly. During the 1936 season, bomb returns were complicated by an unpredictable apparent lag, which was roughly an inverse function of bomb size, and distance to buoy and which could be traced definitely to the electrical circuit of the sono-radio buoy. This keying circuit lag has been reduced to a constant of 0.02 second and is not affected by the size of the bomb used. There was an improved technique in the tuning and adjusting of the sono-radio buoys prior to placing them on station.

The practical use of sono-radio buoys need not be limited to the Atlantic and Gulf coasts. It is true that these automatic buoys were developed primarily to replace station ships and probably will continue to be of greatest practicability on the Atlantic seaboard. However, in the future sono-radio buoys should supplement radio-acoustic ranging shore stations on the Pacific coast, and especially in Western Alaska. Shore stations will continue to be used where such establishment is feasible and where the station will be operated over a long period of time and for

great distances offshore. There are, however, vast unsurveyed areas in Alaska, adaptable for radio acoustic ranging, where no suitable shore sites are available or where the landing and establishment of a shore party is hazardous or impracticable. The automatic sono-radio buoy will do the work. It is easily placed on station and readily shifted, as required, to cover an area effectually with only a small expenditure in cost and time. The travel of sound under water seems to be more efficient on the Pacific coast than on the Atlantic. Consequently, sono-radio buoys should be more reliable and bomb returns received from greater distances in the Pacific coastal waters. Heavier anchoring gear than now in use on the Atlantic coast will be needed in exposed places where there may be heavy seas in order to guard against dragging and possible loss of the buoys. A spare sono-radio buoy should be carried on board as a replacement. Finally, the use of a single sono-radio buoy to supplement two shore stations and provide a check distance must not be lost sight of.

CIRCUIT CLOSURE

On October 30, 1937, Chief Signalman Jasper S. Bilby closed a circuit at triangulation station Hunt City, Jasper County, Illinois, upon which he had been working for 53 years. He began work in the U. S. Coast and Geodetic Survey at this station on September 18, 1884, during the time the triangulation along the 39th parallel was being extended from coast to coast, and spun a web of 35,000 miles of reconnaissance arcs, traverse arcs, level lines and base lines which cover the United States like the threads of a picture puzzle. And believe it or not, (Ripley), he ended his field work, prior to retirement on December 31, 1937, at the exact place he started from 53 years before. We were about to say the "exact point" but unfortunately this "point", the center of a stone post set in 1879 by the U. S. Engineers, was no longer in existence, hence the circuit closure was not quite perfect.

In weaving this web Mr. Bilby became topographically familiar with a very considerable portion of the United States, walked the equivalent of two-thirds the way around the earth, rode mules and horses once around, drove in wagons and buckboards three and a half times around, added another circuit by motor and hand velocipede cars and small boats, and on top of this made the equivalent of fourteen more circuits by automobile trucks. Altogether he travelled (excluding train trips to and from the field) more than twice the distance to the moon.

The length of Mr. Bilby's service covers half the entire period of the Coast and Geodetic Survey's activities. (While the Survey was planned as early as 1807 very little field work was executed prior to 1832). He has witnessed the transition in transportation equipment from the oxcarts used on the Mexican Boundary surveys when twenty miles was a hard day's ride, to the high speed, air cushioned, automobile truck which now may carry our survey parties comfortably over 400 miles of well-paved roads in the same length of time; he has seen base measuring apparatus change from base bars to invar tapes, wooden signal towers, which could be used but once, give way to portable steel towers of his own design; (the Bilby Steel Tower is named after him); wages change from $20 per month, with board, to many times that amount.

During these 53 years Mr. Bilby has spent practically all of his time in the field, living in tents, cooking his own meals, rising before sunup and getting back to camp about sundown. Life in the open has agreed with him and has permitted him to continue active field work though he is several years beyond the biblical three score years and ten.

Though he is entitled to rest after many years of arduous labor we understand that he doesn't know how and that he is now actively engaged in surveying activities in the Florida land-boom areas trying to locate some of the lots which changed hands so rapidly that they became lost in the shuffle. The best wishes of his many friends in the Coast and Geodetic Survey are with him in this new venture.

STATE PLANE CO-ORDINATES

Computation of the co-ordinates on the Transverse Mercator Grid of the intersections of each minute of Latitude and Longitude.

Associate Geodetic Engineer L. G. Simmons, U. S. Coast and Geodetic Survey, located at Atlanta, Georgia, has devised a method of computing the co-ordinates of the minute intersections by the use of calculating machines which he considers much more convenient and more time-saving than the logarithmic computation. He finds that the method gives results that seldom differ more than 1/100th foot from the rigid computation on the Coast and Geodetic Survey form. In very rare cases does this difference amount to 2/l00th foot.

The essence of this method consists in the computation of an auxiliary table of several functions which can then be used for machine computation. Mr. Simmons estimates that this auxiliary table for the State of Georgia was computed in a length of time that would be equal to two men working for two weeks. In this work the State of Georgia has an advantage over most other states that have the transverse Mercator grid because the two zones are exactly similar in scale reduction and in the origin for the Y values. Because of this the auxiliary table had to be computed for only one zone and could then be used in either zone for machine calculations.

Preparation of the Auxiliary Table

In all, five auxiliary functions must be computed and tabulated to which the symbols H, V, a, b and c were given. These functions are derived and calculated in the following manner.

1. Select a meridian that in general is the one farthest from the central meridian on which computations will need to be made. This is called the "key" meridian. On this key meridian compute the X' and Y values for every ten minutes of latitude on the projection.

2. Divide each X' thus obtained by the number of seconds that the key meridian is east or west from the central meridian. For example, if the key meridian is 1° 20' from the central meridian of the zone, this divisor would be 4800, the number of seconds in 1° 20'. This division should be carried to eight significant figures. These values are the "H" terms for every ten minutes of latitude.

3. Interpolate by use of second differences, to obtain the "H" values for every minute of latitude. A mean second difference can be used for a latitude range of at least 5° and possibly for a greater range.

4. Referring to the direct computations along the key meridian, divide each value of "Y (for seconds of Ø')" by a number obtained as follows: - Denote the number of seconds out from the central meridian by DL; divide this number by 100 and then square the result for the given divisor. For a DL of 4800 this divisor would be $48^2 = 2304$. These results will be the "V" values for every ten minutes of latitude and then should be carried to seven significant figures.

5. Interpolate by use of second differences for the "V" values for every minute of latitude. The second difference changes too fast to permit the use of a mean difference, but a mean value can be used for each ten minute group, and these group means can be safely determined by a straight line interpolation between the extreme values.

6. Compute X' and Y values for every five minutes of longitude along the most southern parallel in the projection and interpolate by second differences for the minute values. Also do the same for the highest parallel.

7. The term "b" is the correction (in feet) necessary to be applied to the product "H(DL)" to raise it to the true X' value along the lowest parallel. It is zero at the central meridian and on the key meridian and it is always negative between these meridians. In case it is desired to extend the tables beyond the key meridian, "b" becomes positive. The term "b", then, is "X' - H(DL)" for the lowest parallel and it should be computed for each minute of longitude. Enough of the values "X' - H(DL)" should be computed along the most northern parallel, particularly where they approach a maximum, to determine an accurate ratio between them at the most southern and the most northern parallel for a given meridian.

8. The term "a" is a decimal fraction expressing the ratio between the "X' - H(DL)" values along any parallel to those along the most southern parallel. The value of "a" is unity along the most southern parallel, and is determined by a straight line interpolation for intermediate parallels. It should be determined to four decimal places.

9. The term "c" is the value which must be applied to the value $Y_o + V(DL/100)^2$ to obtain the true value of the Y co-ordinate. In other words $C = Y - Y_o - V(DL/l00)^2$ and it should be computed for every five minutes of longitude along the extreme parallels after the Y values are determined by direct computation. This "c" term is zero at the central meridian and on the key meridian and negative between them. It should be computed to two decimal places, and it can be considered constant along any meridian. It is computed at the extreme latitudes for a check, and the mean result plotted as a large scale curve from which the intervening values can be scaled. They are small enough to permit this method of interpolation.

10. The "H", "V and "a" terms are then tabulated for every minute of latitude and the "b" and "c" terms for every minute of DL, or if preferred, for every 100" of DL as given in the sample below:

EXTRACT FROM THE TABLES FOR MACHINE COMPUTATION OF PLANE

CO-ORDINATES, GEORGIA TRANSVERSE MERCATOR PROJECTION

ø		H	dH	V	a	ø	
		* * * * * * * * * * * *					
33	40	84.518 019	16 306	1.13 5957	0.7602	33	40
		* * * * * * * * * * * *					
33	50	84.354 635	16 378	1.13 6708	0.7482	33	50
		* * * * * * * * * * * *					
33	55	84.272 673	16 414	1.14 0069	0.7422	33	55
33	56	84.256 259	16 421	1.14 0339	0.7410	33	56
33	57	84.239 838	16 428	1.14 0610	0.7398	33	57
33	58	84.223 410	16 436	1.14 0880	0.7386	33	58
33	59	84.206 974	16 443	1.14 1151	0.7374	33	59
34	00	84.190 531		1.14 1421	0.7362	34	00
		* * * * * * * * * * * *					

AUXILIARY TABLE OF CORRECTIONS

DL	b	c	DL
0"	0.00	0.00	0"
100	-0.39	0.00	100
200	-0.78	0.00	200
300	-1.16	0.00	300
400	-1.54	0.00	400
	* * * * * *		
3000	-7.11	-0.13	3000
3100	-7.03	-0.14	3100
3200	-6.92	-0.14	3200
3300	-6.77	-0.14	3300
3400	-6.59	-0.14	3400
	* * * * * *		

EXPLANATION OF USE OF TABLES:

With the tables as computed and tabulated, the formulae for the computation of an X and Y co-ordinate from a geographic position become as follows:

$$X = X' + 500{,}000$$
$$X' = H(DL) + ab$$
$$Y = Y_0 + V(DL/100)^2 + c$$

X' is the distance in feet from the central meridian, plus if the point is east of this meridian and minus if it is west.

H, V, a, b and c are interpolated from the tables using the latitude (Ø) and the longitude distance from the central meridian (DL) as arguments. DL is expressed in seconds of arc.

Y_0 is interpolated for the latitude of the station from Table I of the Plane Co-ordinate Projection Tables for Georgia, published by the U. S. Coast and Geodetic Survey.

L(cm) is the longitude of the central meridian.

Below is a sample computation using these tables. For an exact computation to the nearest 1/100th of a foot, the number of decimal places shown must be used.

STATION	Carnes 2		L(cm)	84° 10' 00" ZONE	West
Ø	33° 59' 35.079"		L	85 00 52.293	
	33° 59.584650' (decimal)		DL	50 52.293	
H	84.197361		DL(seconds)	3052.293	
a	0.7367		$(DL/100)^2$	931.649	
b	− 7.07		V	1.141309	
H(DL)	256,995.016		Y_0	1,452,495.456	
ab	− 5.208		$V(DL/100)^2$	+1,063.300	
X'	256,989.81	(minus)	c	− 0.14	
X	243,010.19		Y	1,453,558.62	

In this manner the co-ordinates of all of the minute intersections on the grid can be computed directly for the use of machines and the results tabulated for this State.

USE OF THE SEARCHLIGHT

When using a searchlight it is well to remember that "the position of the observer with respect to the searchlight has a very definite effect upon the range obtained. If he is able to sight a buoy at 1,000 yards when standing three feet to one side of the searchlight, he would be able to sight a similar buoy at about 2,000 yards if he moved away three feet farther. In other words, the range is approximately doubled as the distance of the observer from the searchlight is doubled, up to about 50 feet. This distance must be to one side of the searchlight, and at right angles to the direction of the beam. Also, an observer stationed above the searchlight will be more advantageously positioned than he would be if he were beneath it."

- - - - - - - - - - - - - - - -

The above quotation is taken from "Thank God for the Searchlight" by W. S. Fish in the September, 1937 issue of Motorship and Diesel Boating.

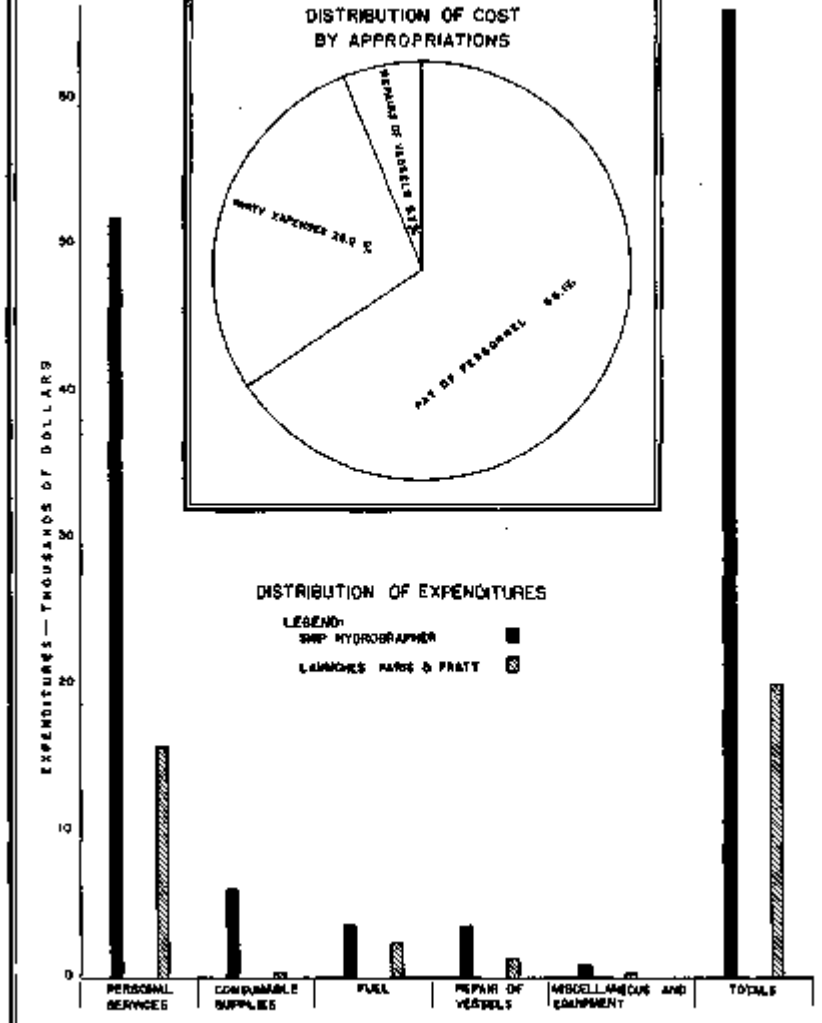

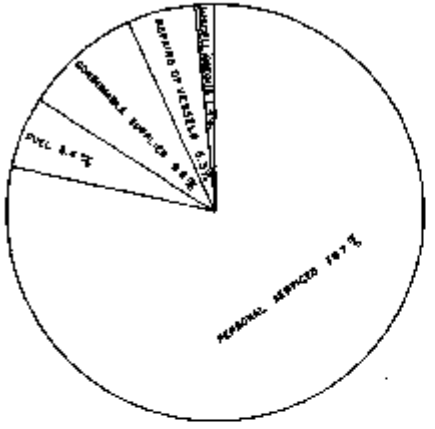

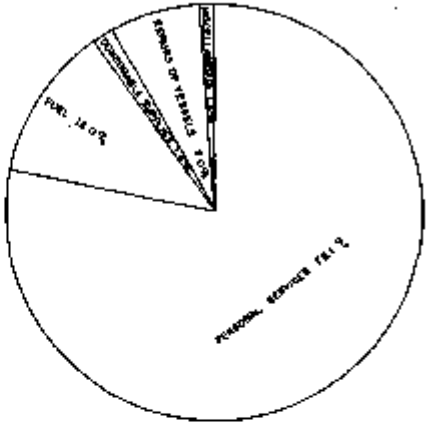

PROJECT STATISTICS & UNIT COSTS

NO. MILES SOUNDING	11798	COST PER MILE	$ 2.18
NO. SOUNDINGS	17944	COST PER SOUNDING	$ 0.72
SQ. MI. SURVEYED	8884	COST PER SQ. MI.	$42.81

U. S. COAST & GEODETIC SURVEY
P. B. PATTON, DIRECTOR

COST ANALYSIS & STATISTICS
COMBINED OPERATIONS
LOUISIANA COAST
1936

SHIP HYDROGRAPHER — LAUNCHES FARIS & PRATT
F. B. BORDER, CHIEF-OF-PARTY

OFFSHORE HYDROGRAPHY IN THE GULF OF MEXICO

Cost Statistics 1936

Paul Taylor, Aid
U. S. Coast and Geodetic Survey

Foreword by Commanding Officer of Ship HYDROGRAPHER.

During the 1936 field season Mr. Taylor was assigned the special duty of analyzing the cost of the season's work. His results show an average cost of $7.15 per mile for the season of almost 12,000 miles of hydrography. This average included the cost of all control and all the tidal observations required in conjunction with the hydrography, in fact it included every item of expense except the cost of operating for one month the party on the Launch FARIS while engaged on a special project indirectly related to hydrography. It was surprising to learn that almost half as much of the ship's time was on control work as was on actual hydrography. It was even more astonishing that the fuel used by the two Launches FARIS and PRATT cost as much as the fuel for the ship.

The general schedule of operations was followed very closely and, in my opinion, this was an important contributing factor to a successful season's work. Other important factors were; firstly, generally favorable weather; secondly, a capable and conscientious complement of officers; and thirdly, an experienced and willing crew.

F. S. Borden, Commanding Ship HYDROGRAPHER.

A subject of much interest to the officers of the HYDROGRAPHER during the 1936 season was that of the cost of field work and its allocation to the various operations and activities of the party. It is a subject, like taxes, forever with us; to some a headache, but to me, during the period covered by this report, it proved interesting and enlightening.

The surveying fleet of the party consisted of the Ship HYDROGRAPHER and the two seventy-five foot Launches FARIS and PRATT. The ship season extended from April 20 to October 31, and the season for the launches from April 13 to October 31. The survey buoys were placed on station and located from the ship which also accomplished 9700 miles of hydrography, practically all of which consisted of echo sounding. The parties on the launches built and located all shore signals, made all the tidal observations, and accomplished 2100 miles of shoal water hydrography, largely hand lead. The launches also served as floating R.A.R. stations.

In making the cost analysis all bills were examined each month and all expenses classified in accordance with the headings shown on the accompanying plate. Consumable supplies, other than fuel and miscellaneous items, were proportioned between the ship and launches as closely as possible. Personal services, which include pay and allowances of all personnel attached to the party, were obtained accurately for each unit from the pay vouchers. Repairs of vessels were estimated for the ship and launches on the basis of what had been required the previous year.

I have attempted to represent graphically (see Cost Analysis Plate), the expenditures for the HYDROGRAPHER separately from the two launches so that one may see at a glance the amount required for each item with its relation to the total cost of operation. It is believed that this will be of use in making estimates for future field seasons.

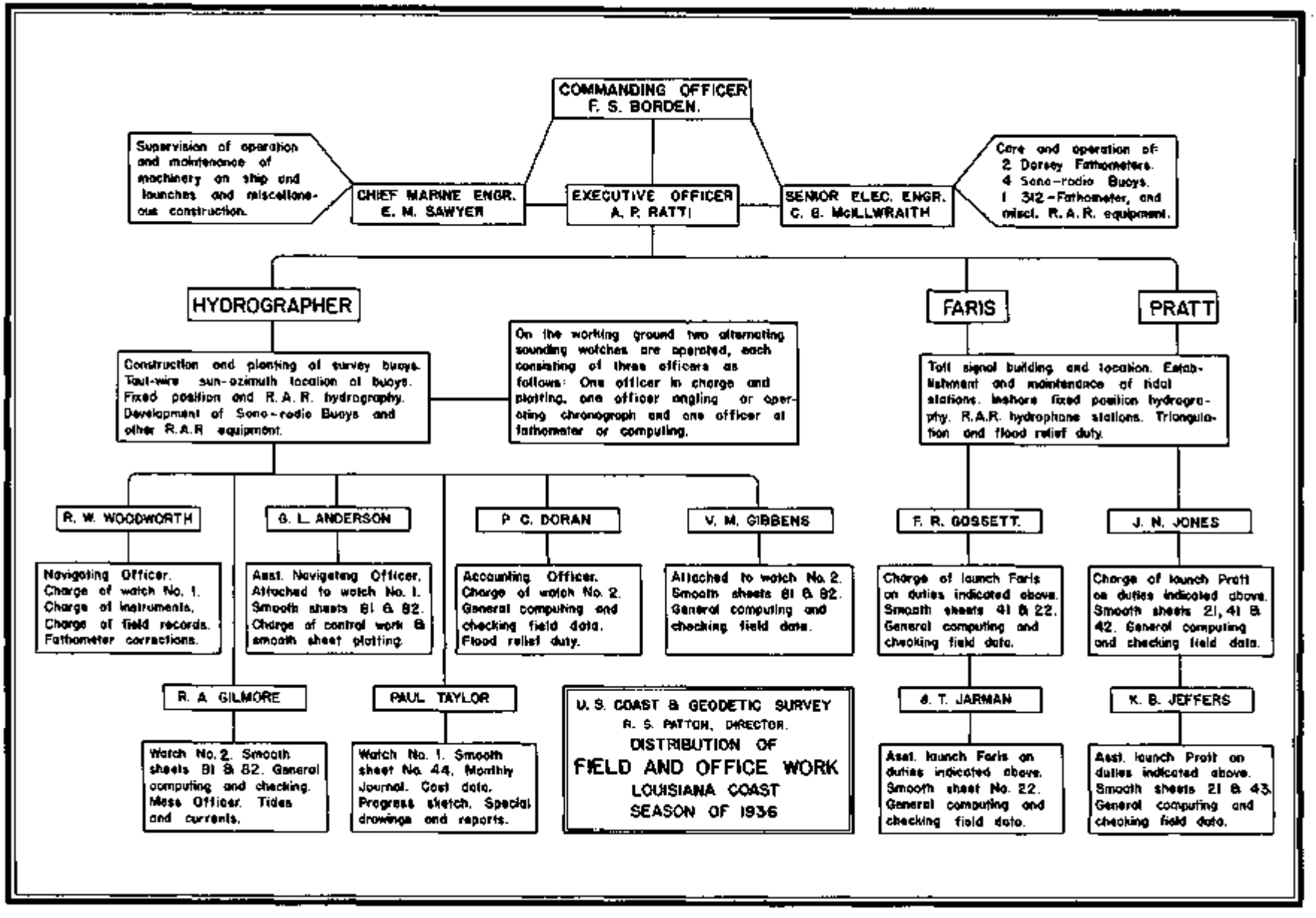
COMMANDING OFFICER
F. S. BORDEN.
Supervision of operation and maintenance of machinery on ship and launches and miscellaneous construction.
CHIEF MARINE ENGR.
E. M. SAWYER
EXECUTIVE OFFICER
A. P. RATTI
SENIOR ELEC. ENGR.
C. G. McILLWRAITH
Care and operation of 2 Dorsey Fathometers. 4 Sono-radio Buoys. 1 312-Fathometer, and miscl. R.A.R. equipment.
HYDROGRAPHER
Construction and planting of survey buoys. Taut-wire sun-azimuth location of buoys. Fixed position and R.A.R. hydrography. Development of Sono-radio Buoys and other R.A.R equipment.
On the working ground two alternating sounding watches are operated, each consisting of three officers as follows: One officer in charge and plotting, one officer angling or operating chronograph and one officer at fathometer or computing.
FARIS
PRATT
Toll signal building and location. Establishment and maintenance of tidal stations. Inshore fixed position hydrography. R.A.R. hydrophone stations. Triangulation and flood relief duty.
R. W. WOODWORTH
Navigating Officer. Charge of watch No. 1. Charge of instruments. Charge of field records. Fathometer corrections.
G. L. ANDERSON
Asst. Navigating Officer. Attached to watch No. 1. Smooth sheets 81 & 82. Charge of control work & smooth sheet plotting.
P. C. DORAN
Accounting Officer. Charge of watch No. 2. General computing and checking field data. Flood relief duty.
V. M. GIBBENS
Attached to watch No. 2. Smooth sheets 81 & 82. General computing and checking field data.
F. R. GOSSETT.
Charge of launch Faris on duties indicated above. Smooth sheets 41 & 22. General computing and checking field data.
J. N. JONES
Charge of launch Pratt on duties indicated above. Smooth sheets 21, 41 & 42. General computing and checking field data.
R. A. GILMORE
Watch No. 2. Smooth sheets 81 & 82. General computing and checking. Mess Officer. Tides and currents.
PAUL TAYLOR
Watch No. 1. Smooth sheet No. 44. Monthly Journal. Cost data. Progress sketch. Special drawings and reports.
U. S. COAST & GEODETIC SURVEY
R. S. PATTON, DIRECTOR.
DISTRIBUTION OF
FIELD AND OFFICE WORK
LOUISIANA COAST
SEASON OF 1936
S. T. JARMAN
Asst. launch Faris on duties indicated above. Smooth sheet No. 22. General computing and checking field data.
K. B. JEFFERS
Asst. launch Pratt on duties indicated above. Smooth sheets 21 & 43. General computing and checking field data.

DISTRIBUTION OF WORKING TIME
SHIP HYDROGRAPHER

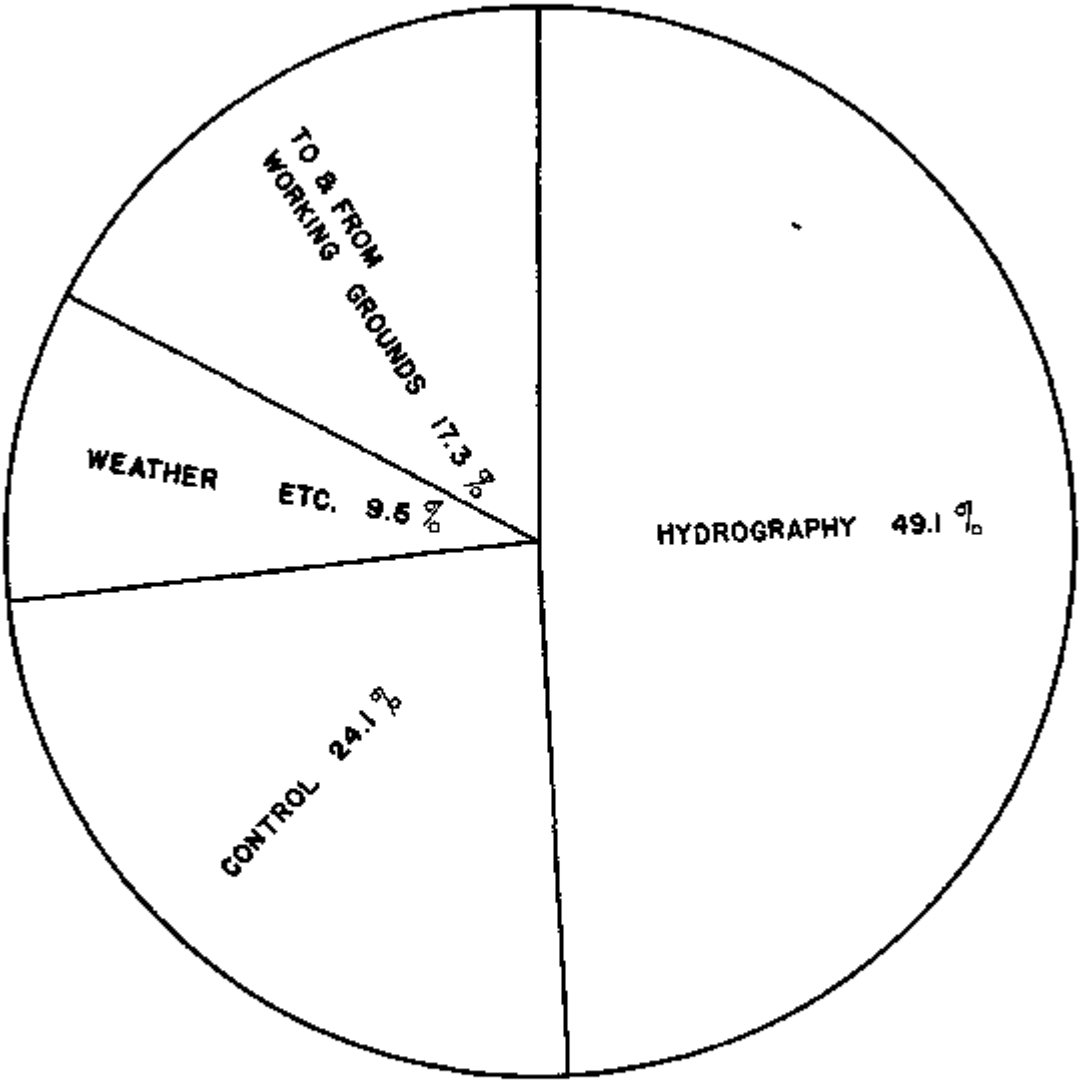

NOTE: Percentages are based on total available working time while ship was in the field.

It is interesting to note that the percentage of cost for personal services is approximately the same for both units, whereas for fuel the percentage is more than twice as much for the two launches as for the ship. The percentage of cost for repairs to vessels is also slightly-higher for the launches. The percentage of cost for consumable supplies is quite a bit greater for the ship, due to the cost of taut wire, buoy and signal material.

There is included herewith the general bi-monthly schedule of operations of the Ship HYDROGRAPHER, for the 1936 season, which was followed very closely throughout.

Two round trips to the working ground were made each month.

Each trip as follows:	No. of Days
1. Away from port	
(A) Actually on the working ground	9
(B) Running to and from the working ground, (temperature and salinity observations, reconnaissance, log ratings, training in astronomical work, engine tests, overhaul of equipment, fire and station drills, ship inspections, buoy construction, general cleaning, field records, reports, accounts, etc.)	2
Total days away from port	11
2. In port:	
Observing holidays, obtaining supplies and attending to other miscellaneous official port business	4
Total per trip	15
Total 2 trips	*30

* The odd day in 31-day months was offset by legal holidays.

A plate shows the distribution of working time. This was kept daily so that the plate shows the actual percentage of working time consumed in hydrography, in establishment of control, in waiting out bad weather and for certain minor causes; also the time consumed in running to and from the working ground. The average distance to and from the working ground for all of the 13 bi-monthly trips was 280 miles.

Time lost by weather represents the actual daylight working hours during which the ship was prevented from working while on the working ground. This, however, fails to present an exact account since it does not include time consumed in replacing survey buoys, damaged or carried away by storms, nor time expended in checking their positions. It does, I believe, represent the average loss of time on account of weather to be expected while working off the Louisiana Coast between April 15th and November 1st.

"I often say that, when you can measure what you are speaking about and express it in numbers, you know something about it, but, when you cannot measure it, when you cannot express it in numbers, your knowledge is of a meagre and unsatisfactory kind. It may be the beginning of knowledge but you have scarcely, in your thoughts, advanced to the stage of Science, whatever the matter may be."

Lord Kelvin.

SANTA CLARA VALLEY SUBSIDENCE HAS NOW REACHED 5 FT. *

E. E. Stohsner, Aid
U. S. Coast and Geodetic Survey

Known to have begun more than 16 years ago, settlement of an area of 200 square miles near the southern end of San Francisco Bay is continuing . . . Maximum settlement near southern end of area.

Repeated rerunning of first order level lines at intervals of several years in the Santa Clara Valley near the city of San Jose, California, has shown continuous settlement of benchmarks. The area affected includes about 200 sq. mi. and the amount of settlement reaches a maximum of slightly more than 5 ft. in the business district of San Jose (population 80,000). Strangely enough, the point of maximum subsidence is not near the center of the subsiding area but is near the southern end.

The first indication of subsidence was discovered by a survey made in 1920, checking in on benchmarks set in 1912. However, the settlement in this 8-year period was not great and importance of the matter was not fully appreciated at that time. The region was not again traversed by first-order level parties until 1932. At that time the maximum settlement had reached 4 ft., and it was apparent, that considerable subsidence over a large area was involved (Engineering News-Record, June 29, 1933, p. 845).

Plans then were made for observing subsequent changes, as described in the following. The elevations as given in this article are subject to small corrections or adjustments to be made for temperature and other factors that must be applied before the figures can be considered final. The sum of these corrections, however, probably will not change the values more than a tenth of a foot.

The earliest records of first-order leveling in this region were made in 1911-12, when a first-order level party carried a line from Brigham, Utah, to San Francisco by way of San Jose. Levels established at that time constitute the datum from which are measured the later subsidences. Surveys made in 1920 extended southward from San Jose along the Southern Pacific R. R. tracks to Santa Margarita, California.

In 1931-32 the levels again were checked, this time running southward from San Francisco to San Jose and tying in all recoverable benchmarks on the old line, even though in some instances a different route was followed. This releveling was done under a cooperative agreement with the California Division of Highways. The results of this work established the extent of the remarkable subsidence in this area and brought about the plans, already mentioned, for closer observation.

A study of results of this survey and comparison of computations suggested additional field work to establish beyond question the extent of the surprising subsidence, particularly in the vicinity of San Jose, and also to determine the limits of the area in which settlement had occurred. Therefore during the winter of 1932-33 leveling was continued. The line from San Francisco to San Jose again was rerun, and this time it was established that discrepancy with the earliest levels appeared as far north as Redwood City, 22 miles north of San Jose. At that time (spring of 1933) the maximum subsidence on the original benchmark in San Jose was found to be about 4 ft. Starting from San Jose as a center and rerunning lines to the north and to the south established the fact that the disturbed area did not extend as far as Niles to the north nor to Coyote on the south.

* Reprinted through courtesy of Engineering News-Record.

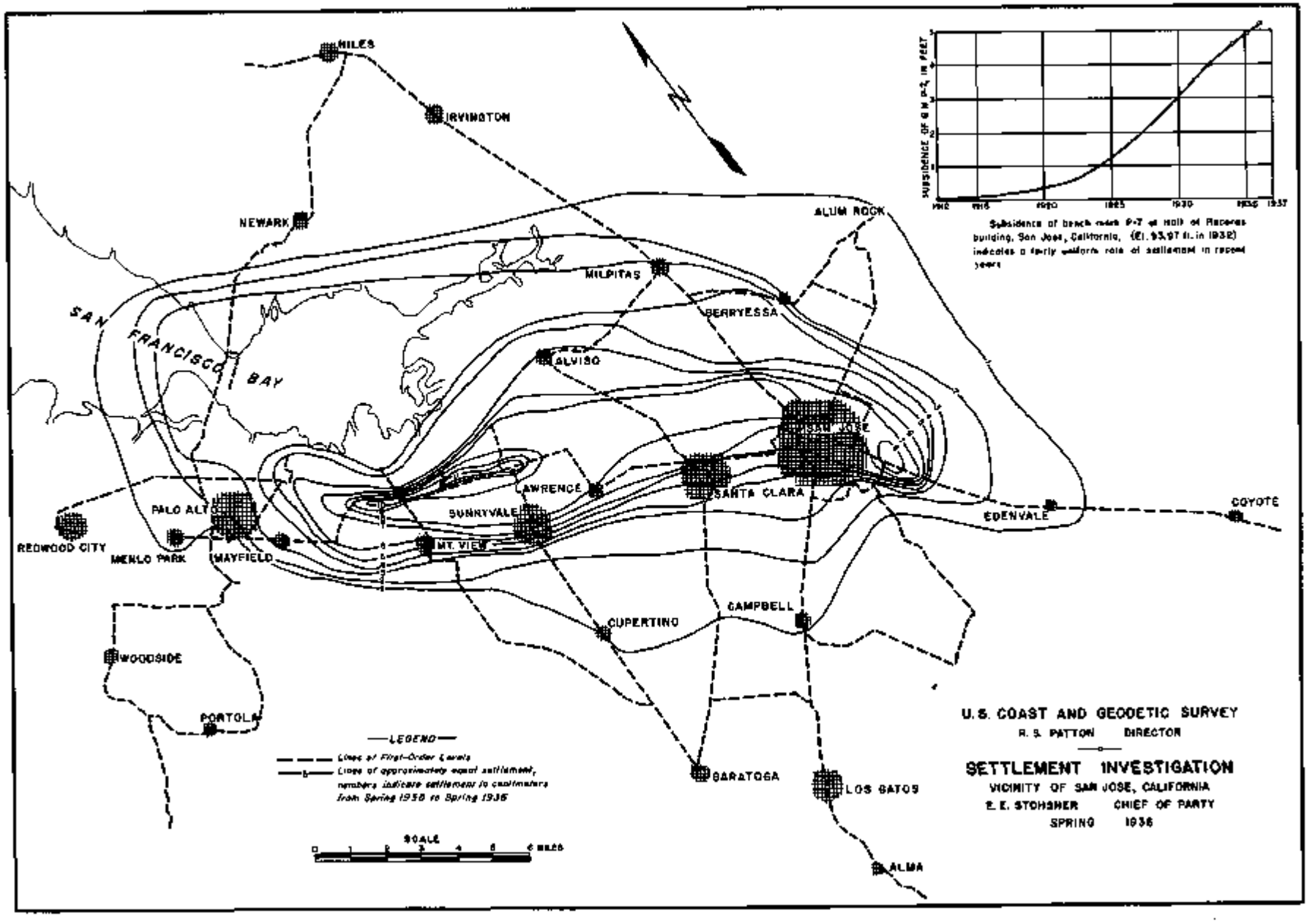
U.S. COAST AND GEODETIC SURVEY
R. S. PATTON DIRECTOR
SETTLEMENT INVESTIGATION
VICINITY OF SAN JOSE, CALIFORNIA
E. E. STOHSNER CHIEF OF PARTY
SPRING 1936
LEGEND
Lines of First-Order Levels
Lines of approximately equal settlement, numbers indicate settlement in centimeters from Spring 1934 to Spring 1936
SCALE
0 1 2 3 4 5 6 MILES
SAN FRANCISCO BAY
MILES
IRVINGTON
NEWARK
ALUM ROCK
MILPITAS
BERRYESSA
ALVISO
SAN JOSE
SANTA CLARA
LAWRENCE
SUNNYVALE
MT. VIEW
PALO ALTO
REDWOOD CITY
MENLO PARK
MAYFIELD
EDENVALE
COYOTE
CAMPBELL
CUPERTINO
WOODSIDE
PORTOLA
SARATOGA
LOS GATOS
ALMA
SUBSIDENCE OF G.W.P.-2, IN FEET
1912
1915
1920
1925
1930
1935
1937
Subsidence of bench mark P-2 at Hall of Records building, San Jose, California, (El. 93.97 ft. in 1932) indicates a fairly uniform rate of settlement in recent years

With outer boundaries of the affected area thus determined it was possible to plan a network of level lines such that the rates of subsidence at various points within the area could be studied. This being done, in the spring and summer of 1934 more first-order level lines were run and old lines again were rerun. This field work provided additional information on the entire system now known as "the San Jose net," consisting of some 200 miles of first-order levels and including 360 permanent benchmarks. This entire network was rerun in the spring of 1935 and again in the spring of 1936.

These successive surveys indicate progressive subsidence, the accompanying plate showing graphically the amount between the last two surveys. The bench which has shown maximum subsidence is P-7, located in the north balustrade of the Hall of Records building in San Jose. Subsidence at this point is shown graphically in the insert. Despite the long interval (between 1920 and 1932) during which no surveys were made, the general trend of the curve is indicated rather definitely by the observations of the past four years.

The rate of subsidence has been increasing in the vicinity of the Moffat field air base, approximately 11 miles northwest of San Jose. Benchmark P-7 at San Jose showed a settlement of 0.87 ft. during the 1932-35 period; in the same time the settlement of benchmark G-lll at Moffat field was 0.60 ft. But from the spring of 1935 to the spring of 1936, P-7 went down 0.26 ft., while G-lll went down 0.41 ft. The two benchmarks selected for this comparison represent average figures for their localities and from outward appearances are free from local disturbances.

In contrast with the settlement prevailing quite generally over a large area, a few exceptions were noted. These are slight rises or increases in elevations recorded at several points in the precise level network. Some of these are noted in the table. Whether this is merely a local condition, represents a heaving resultant from horizontal components, or has some other significance, has not been determined.

Subsidence in the vicinity of San Jose has been accompanied by a significant indication at many of the deep wells which are common in this area; some of the wells are 800 ft. deep. During the past 15 years owners have been puzzled by the apparent rising of well casings and pumps. This became measurable as the pumps lifted from their foundations. The real cause, of course, was that the foundation blocks were settling as the surface lowered, and the more stable support of the casing tended to hold the pump where it was while the foundation sank away from it. This condition proved quite troublesome; the custom has been to remove protruding portions of well casings at regular intervals in order to keep pumps on their bases. Using the length of the portions of casing cut off, it was found that some pumps had been lifted off their foundations at the rate of 2 to 3 in. per year, a total in some instances of 2 ft. This has suggested that only a small part, if any, of the subsidence can be ascribed to earth movement of deepseated origin. That is, the cause of settlement seems to reside in the first few hundred feet below the surface.

Another visual evidence of the subsidence appears on the land adjacent to the shore of San Francisco Bay and within the area where settlement is occurring. For several years here tidewater has shown a tendency to encroach upon the adjacent cultivated area. As subsidence continued it became necessary to construct dikes to protect existing improvements, including valuable fruit orchards.

Surveys have been made by the U. S. Coast & Geodetic Survey, Admiral R. S. Patton, director; Commander R. R. Lukens, inspector, in charge at San Francisco. The writer was chief of party on surveys made in 1936.

STRENGTH OF THREE-POINT LOCATIONS

R. M. Wilson, Chief, Section of Computing
U. S. Geological Survey

In determining the position of a control point by the "three-point" method, the field engineer is often uncertain as to the strength of the figure involved. He knows in general that the figure is weak if the three-point position is too close to the circumference of the circle passing through the fixed stations to which sights are being taken, or if it is too far outside that circle. By the following method it is possible to measure the precision with which a point can be located under various circumstances, and to prescribe limiting conditions to eliminate unreliable stations. In order to make it convenient in the field for testing conditions at proposed locations, the method has been arranged so as to use only the information that is ordinarily available during reconnaissance. The method may be applied before the position of the station is computed.

Figure I represents one of the triangles involved in locating point P by the three-point method. Given the base, a, and the measured angle, A, subtending it, a circle may be drawn to show the locus of all points from which that angle might have been observed. The radius of the circle is so large that for a short distance in the immediate vicinity of P the locus may be considered as being the straight line tangent to the circle at P. The direction of the tangent may be plotted graphically, or calculated, by laying off either of the base angles of the triangle outside the vertex as indicated in the figure. For example, at P an angle equal to m is laid off, outside of the triangle, from the side opposite m. Now P may be moved along the tangent for a short distance without appreciably changing the size of angle A.

If A is increased or decreased by any small, definite amount, the radius of the circle is changed and it is possible to calculate the resulting transverse or radial displacement of the locus in the vicinity of P. Let v be the displacement, in feet, for each second of change in A. The positive direction of v is toward the triangle and corresponds to an increase in A. Then v = Ka in which a is the length of the base in miles. The coefficient K depends upon the shape of the triangle; its value is computed by the following formula*, taking care to use the signs of the trigonometric functions correctly:

$$K = \frac{\cos A - \cos(A + 2m)}{1 - \cos 2A} \quad (5280 \sin 1'')$$

* The development of above formula is as follows:

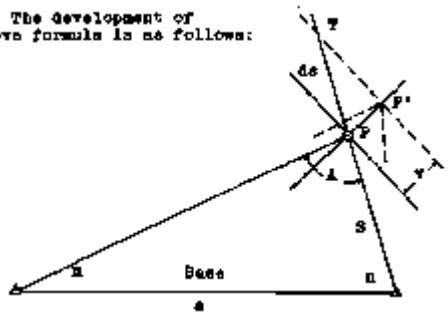

$$\frac{\sin A}{a} = \frac{\sin m}{s}$$

s = a.sin m.csc A

Holding angle n as constant, solve for the change in S due to a change in A. Since A = 180° - m - n, any change in A results in a like change in m, but with opposite sign. Therefore dA = - dm. Differentiate the above expression first with respect to m:-

ds = a.cos m.csc A.dm = - a.cos m.csc A .dA

and then with respect to A:-

ds = — a.sin m.csc A.cot A.dA

and add these two for the total change in s for a change dA in angle A:

$$ds = -a\left[\frac{\cos m}{\sin A} + \frac{\sin m \cdot \cos A}{\sin^2 A}\right] dA = -a\left[\frac{\cos m \cdot \sin A + \sin m \cdot \cos A}{\sin^2 A}\right] dA$$

In the diagram, ds is represented by the line PT, and is the diagonal distance between the parallel lines representing the loci of P, and of P' when A has been changed by dA. But it is the perpendicular distance between these lines, v, that is required. Let the positive direction of v be toward the triangle, v = - ds sin m, which is the "radial" component desired. Then:-

$$v = a\left[\frac{\sin m \cdot \cos m \cdot \sin A + \sin^2 m \cdot \cos A}{\sin^2 A}\right] dA = a\left[\frac{\cos A - (\cos 2m \cdot \cos A - \sin 2m \cdot \sin A)}{2 \cdot \sin^2 A}\right] dA$$

$$= a\left[\frac{\cos A - \cos(A + 2m)}{1 - \cos 2A}\right] dA$$

and finally, if a is in miles and v is in feet, and if dA is to be a change of 1" in the angle A, Then:-

$$v = Ka = a\left[\frac{\cos A - \cos(A + 2m)}{1 - \cos 2A}\right] 5280 \sin 1''$$

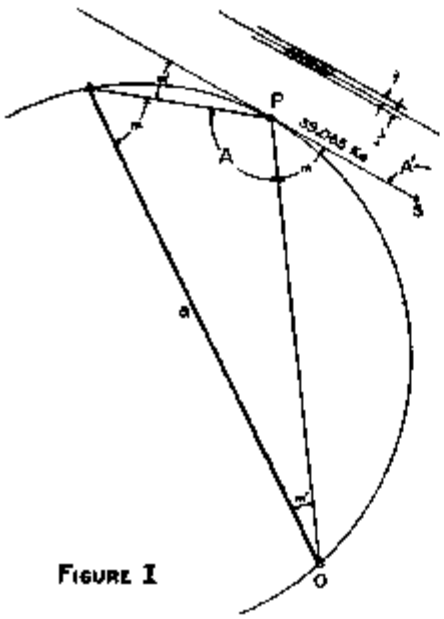

FIGURE I

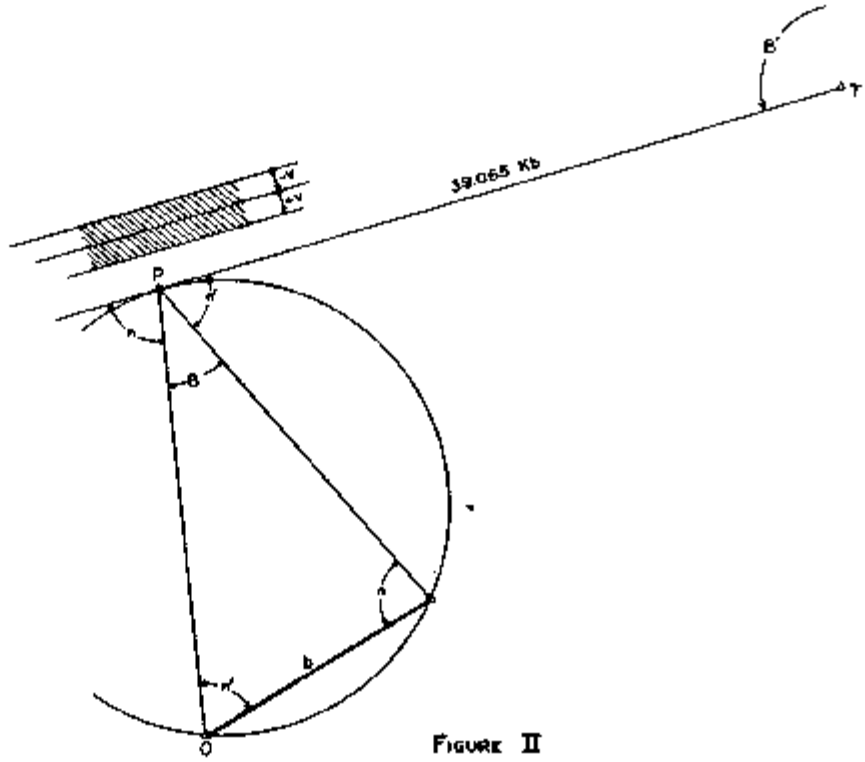

FIGURE II

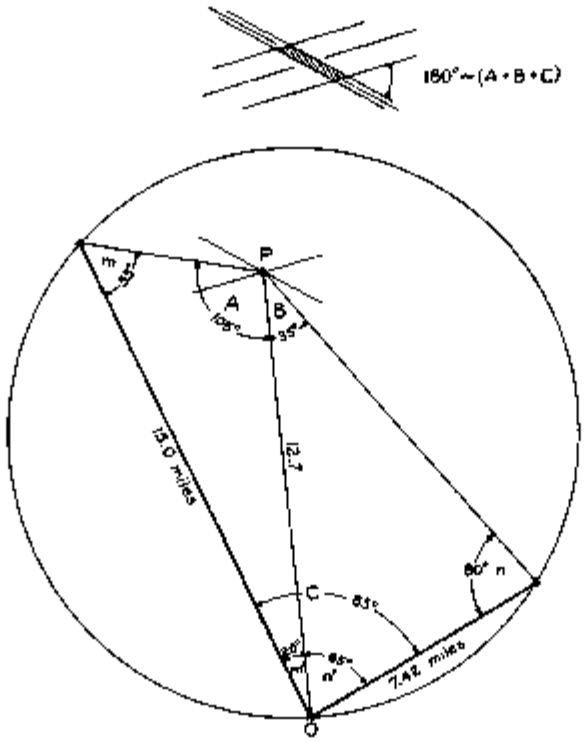

FIGURE III

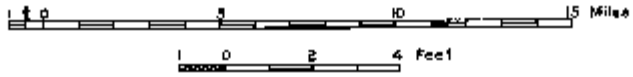

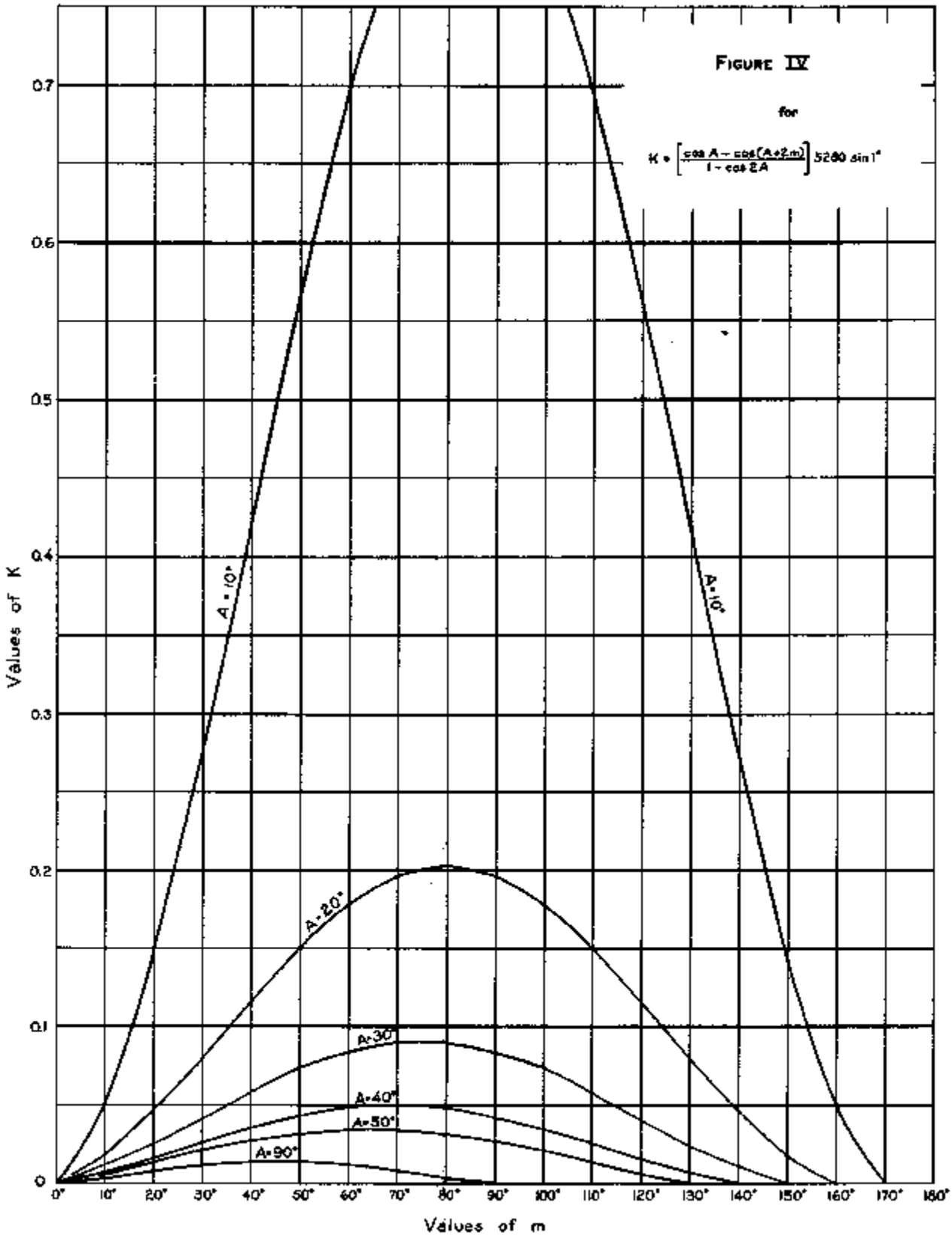
FIGURE IV
for
$K = \left[\frac{\cos A - \cos(A+2m)}{1-\cos 2A}\right] 5280 \sin 1''$
Values of K
Values of m
0.7
0.6
0.5
0.4
0.3
0.2
0.1
0
0°
10°
20°
30°
40°
50°
60°
70°
80°
90°
100°
110°
120°
130°
140°
150°
160°
170°
180°
A = 10°
A = 10°
A = 20°
A = 30°
A = 40°
A = 50°
A = 90°

For present purposes the value of (5280 sin 1") may be taken to be .0256. The desired result is obtained by using in the formula either one of the base angles, m or m'.

There are only two variables involved in calculating K. Therefore, if this method were to be used for testing a great number of three-point locations, it would be a relatively simple matter first to construct a graph to find K for any given values of A and m. Since K need be known only to two or three significant figures, its precision as determined by a graph is sufficient. Figure IV suggests one form in which such a graph could be prepared. It might be improved by enlarging the scale of K for its lower values, and reducing the scale of K for its higher values. However, the computation of K from the formula is a very simple matter if a table of natural cosines and a slide rule are used.

If the triangle is a very narrow one, the formula just given approaches a form that is indeterminate. In such cases the three-point station will be nearly in line with the base. Then, instead of measuring angle m in order to find the value of v, measure the two distances, D' and d", from the station to the two ends of the base. Then $v = \frac{.0256\ D'D''}{a}$* allowing certain approximations, when v is in feet, and D', D", and a are in miles. Because this formula is so simple, and because it need be used only in those special cases in which A or m is within about 5° of either 0° or 180° , no graph is required as an aid in finding v under these circumstances.

It is apparent that the position of the three-point station must be known approximately in order to obtain the value for m or m', D', and D", and even for A if it is not convenient to go to the proposed station and make trial measurements of the angles there. Generally the station site can be indicated on the triangulation sketch or on a map that may be in use during reconnaissance, determining its position by making a "tracing-paper three-point" or by locating it in proper relation to local details shown on the map. Values of the angles or distances just mentioned then may be obtained graphically with a degree of precision usually sufficient for the purposes here described.

Now to look at the problem from another point of view, extend the tangent in either direction to a point S. Imagine S to be a fixed triangulation station occupied to locate P by intersection, using the line SP directed by an angle such as A' measured at S. Take the length in miles from P to S equal to 39.065 v. Then the changes in A' will be equal to corresponding changes in A when P is moved in a direction at right angles to the line SP. Therefore, whether the line SP is considered as the locus of points from which A may be observed or as the intersecting line directed by A', its effect is the same in its transverse control of P if A and A' are assumed to be of equal precision. Thus the actual condition of resection (angle A subtending base a) may be represented by an equivalent element of simple intersection.

- -

The development of this auxiliary formula, when P is nearly in line with the base, a, follows:

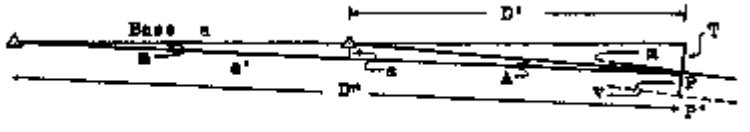

$\sin A = \frac{S}{D'}$, and, $\frac{S}{a'} = \frac{T}{D''}$ but assume $a = a'$ then, $T = \frac{D''S}{a} = \frac{D'D''\sin A}{a}$

$dT = \frac{D'D''\cos A}{a}\,dA$ but dT is not quite in line with v, so that v = dT cos m.

However, both m and A are small, so for present purposes it is safe to assume that oos A = 1 and cos m = 1. Then $v = \frac{D'D''}{a}\,dA$ and if, as before, D', D" and a are in miles, and v is in feet, and if dA is to be 1" then $v = \frac{D'D''}{a}\ 5280 \sin 1''$.

Assume that the error of measurement of angle A is less than one second, plus or minus. The three-point station will then lie somewhere near P, between two lines parallel to SP and spaced + v and - v respectively from SP. It may be located anywhere (but not too far laterally from P) within the narrow lane bounded by these parallel lines without changing the value of A by an amount greater than the limits chosen, +1" or -1". A sketch on a large scale should be drawn to show this condition in the locality of P; a scale of one or two feet to the inch is usually convenient. This sketch is shown in figure I for the triangle just discussed.

Figure II represents the other triangle needed for a simple three-point location. It contains the base b and the observed angle B subtending it. PO represents the same line in both Figures I and II. Using angles B and n and the base b, a large scale sketch can be drawn to represent the limits which this second triangle imposes upon the position of the three-point station.

Now Figures I and II may be combined to show the complete three-point problem. Figure III shows the two triangles placed together by means of the line PO which is common to them both. The related large scale sketches drawn to the same scale, should be placed together also, taking care that they remain oriented in agreement with the figures from which they were derived. The resulting parallelogram-shaped enclosure shows the size, shape, and orientation of the area within which the three-point station may be located without distorting either of the observed angles A and B more than one second from their measured values. This parallelogram will be small if conditions allow an accurate location by the three-point method. If the parallelogram is long and narrow, it indicates that the location is weak in one direction and strong in the other. As shown to scale in the figure the size of the parallelogram in feet is based upon possible errors in the measured angles up to ±1". If limits of error larger or smaller than one second apply alike to both angles the linear dimensions of the parallelogram should be changed in proportion. If desirable, different limits of error may be considered separately for the two angles, which would change the shape of the parallelogram. The longest diagonal of the parallelogram indicates the maximum range of uncertainty in the position being determined under the given conditions. A prescribed maximum length in feet for the longest diagonal therefore may be specified as a limit, chosen according to the purpose for which the station is to be used. Then the precision with which the angles must be measured will be indicated accordingly. Or, if an observer knows how closely he can measure his angles, he will be able to determine whether the strength of the proposed figure will enable him to locate a point within the prescribed limit of uncertainty.

In third-order triangulation, triangle closures are supposed to be less than a prescribed maximum of 10". Construing this to mean that angles in this class of work must be measured individually with errors never exceeding 3.33", the parallelogram should be drawn with each v multiplied by 3.33. Then if 5 feet be chosen as the limit of uncertainty for the position of the station, no three-point location should be attempted when either diagonal of the related parallelogram is longer than 5 feet. Since limiting errors are being considered, it may be expected that the probable error of location will then be considerably less than 5 feet.

The limits just illustrated may, of course, be changed to suit various classes of work. It is to be noted that the limiting error in angles A and B has been considered rather than the probable error, the average error, or any other measure of precision. Also, there have been considered only the two measured angles A and B, which are independent and just sufficient to locate the new station. Usually, after A and B have been measured, the horizon will be closed or the sum angle will be measured as a check. It is possible therefore to draw a third pair of parallel lines on the large-scale sketch, representing the third measured angle and its

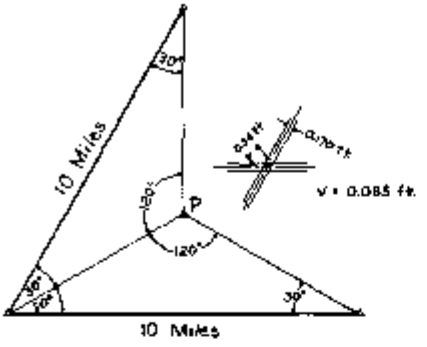

FIGURE V

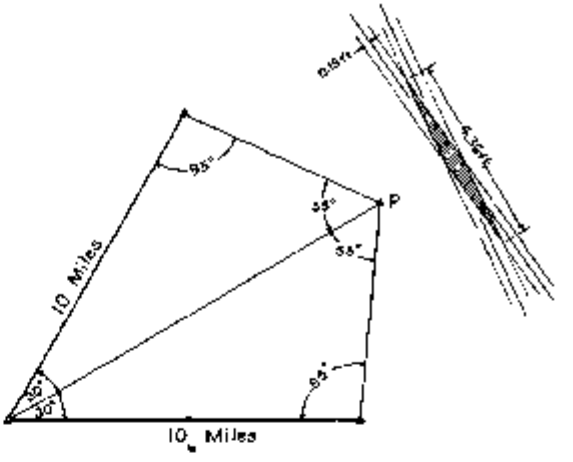

FIGURE VI

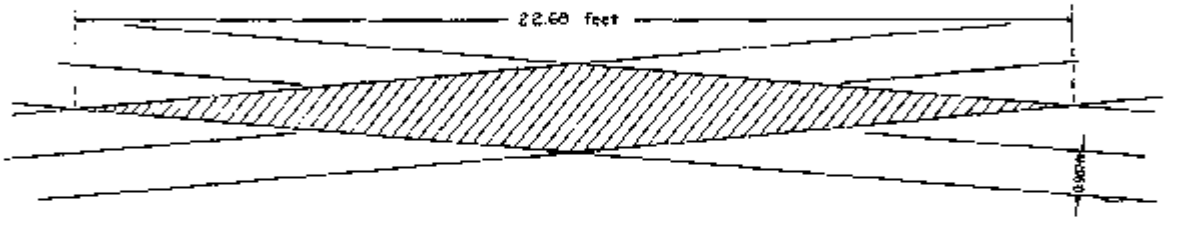

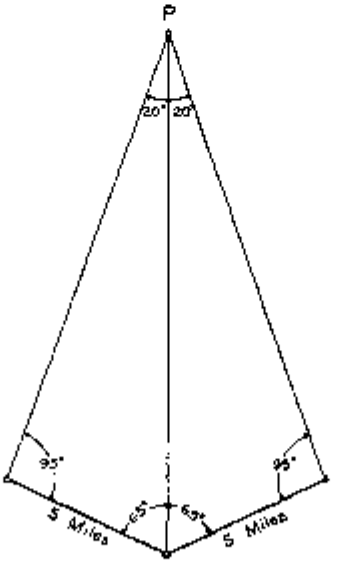

FIGURE VII

base. This band will generally reduce the area of uncertainty by cutting two corners from the parallelogram. However, since the three angles are related to one another by a direct mathematical condition, their limiting errors are interdependent. An adjustment of observed values of the angles is necessary to meet the condition. The three-point station may require adjustment, also, because of sights taken to stations other than the three required for a simple location. The method just described in terms of limiting errors may be used as well to translate the probable errors in the angles of an adjusted three-point location into terms of probable error of position. The present discussion will not be continued so as to include the application of this method when adjusted angles are considered, or to explain the meaning of the smaller area of probable error bounded by sets of parallel lines related to many conditioned and adjusted angles.

The three-point problem may be visualized by considering the equivalent intersection figure. If P were being located by intersection from stations S and T, as in Figure IX, its position would be weak if the intersection angle were small. Similarly, since the point really is being located by the intersection of arcs of circles, its position will be weak if the intersection angle between the arcs is small. In any three-point problem the intersection angle is equal to 180° (A + B + C), and if this angle is equal to 0 the station is "on the circle." It is very easy for the field man to use this as a partial test since he knows the angle, C, between the bases, and a quick preliminary measurement can be made of A and B.

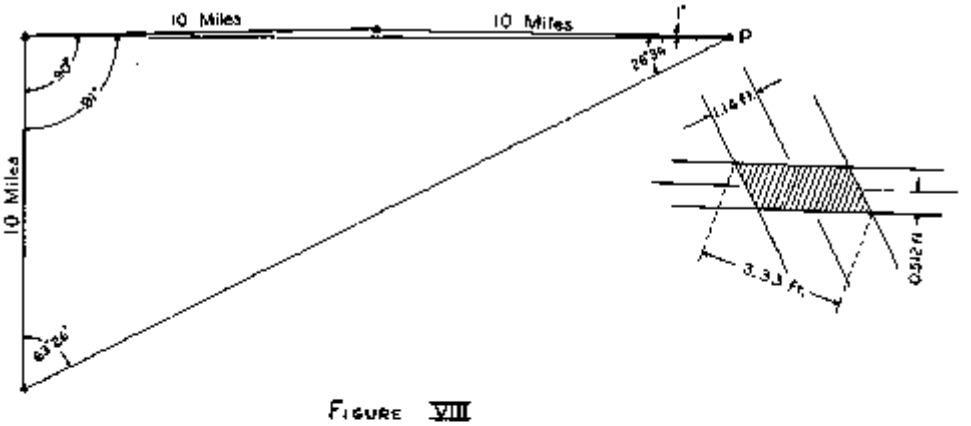

FIGURE VIII

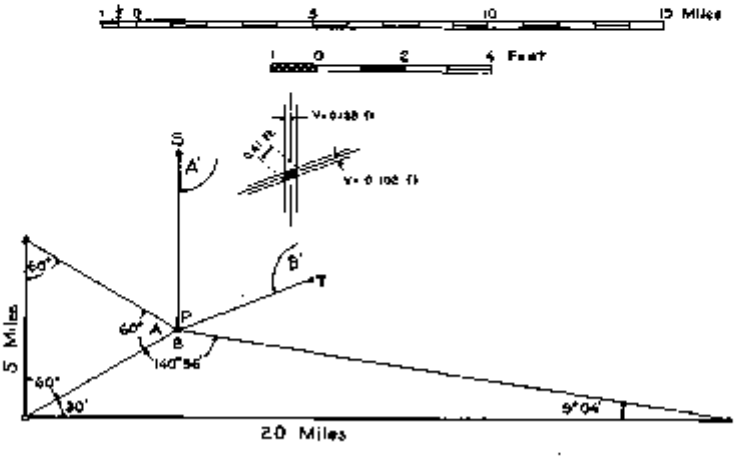

FIGURE IX

To avoid weak locations, the following simple rule might be adopted: Never attempt a location when the intersection angle, 180° (A + B + C), is less than, say, 20°. But the size of the intersection angle does not give complete information as to the strength of the location. Even with more than 20° in this angle, if the equivalent lines of intersection are too long, the position will not be a strong one. It is safest, therefore, to rely upon the information given by the parallelogram.

A few figures are included to illustrate the characteristics of the parallelograms related to them. The location shown in Figure V is very strong. Figures VI and VII show locations in which the value of 180° (A + B + C) is the same, yet the location in Figure VI is the stronger. Figure VIII shows a location involving a narrow triangle in which the distances, instead of the angles, must be measured to obtain the value of v. Figure IX shows a strong location, and the equivalent imaginary intersection lines have been drawn to show their relation to the actual figure.

For ease in comparison, the same scale has been used in drawing the parallelograms in all of these figures. Scales more appropriate to the individual figures would be preferable if each were to be considered separately.

BOOK REVIEW

THE WORLD IN MAPS, by W. W. Jervis, Professor of Geography in the University of Bristol, is an interesting and refreshing study in map evolution. While the book has been written with the aim of being intelligible to readers with no special scientific knowledge, it contains much information and criticism of value to the student of maps and the map-makers of today. The first half of the book is devoted to an explanation of maps and their contents and contains chapters on scale, azimuth, projection, detail, relief and lettering. In connection with each of these subjects are given a great many historical references to show the evolution of that particular subject.

One may open the book at any page and enjoy what is written therein. Professor Jervis' method of treating this subject is a particularly happy one. He says of detail that "There is hardly space to do more than hint at the wealth of diversity in modern maps. Their simplicity and their beauty are made more apparent in their use than in their description. * * * * The modern one is a most enjoyable map to use, and indeed, is an altogether joyful affair. It discriminates. Its detail is balanced and controlled." But it is the representation of relief which receives most attention. Speaking of modern maps, he says "The relief does not glower in clumsy hachures from a landscape which appears never to have known the midday sun * * * The modern map-maker has lifted his eyes into the hills and has enjoyed the prospect. The vision has given him courage to combine science and art." Professor Jervis praises recent attempts of combining hill-shading with contours and spot heights and thinks it unlikely that a more satisfactory solution of this greatest problem of representation will be obtained.

The second half of the book contains chapters on maps of the middle ages, famous map-makers, modern map production, modern map uses and topographical maps. The Portolan Charts and some of the famous marine charts of the Middle Ages receive adequate attention but modern marine charts are scarcely mentioned. This is to be regretted and it is hoped that Professor Jervis will next turn his attention to marine charts and give the same interesting and discerning attention which he has bestowed upon maps.

The appendix contains a chronological list (not exhaustive) of representative maps from 8700 B.C. to A.D. 1936 and a bibliography of almost 200 items.

The introduction is quoted here almost in its entirety for its general interest and as being typical of the style of the book proper.

> "I am told there are people who do not care for maps, and I find it hard to believe."
>
> R. L. Stevenson.

'To travel, to visit new places and see new sights, is surely the most desirable thing in the world, but the essential of travel is freedom, complete freedom, to do, think and feel just as one pleases, and its purpose is to leave ourselves behind as much as to be rid of others. To some, of course, the dread of being left alone is like the horror of a vacuum; nevertheless, if we must have human company, it follows--as the night the day--that we must sometimes have bad Company. "Let me have a companion on the way," says Sterne, "were it but to remark how the shadows lengthen as the sun declines." Beautifully said, but how dreadful not to be able to read the book of Nature without the continual necessity of translating it to another. These awkward silences, broken by attempts at wit, or by the reiterated platitudes of a companion whose commonplaces are as tiresome as they are meaningless. The scent of new-mown hay and your companion devoid of a sense of smell; snow-capped peaks gnawing into a clear blue summer sky and your companion short-sighted; the setting sun and the whole floor of heaven inlaid with patines of bright gold, the greys and pinks of early morn, and your partner colour-blind. In any case, to give rein to one's feelings before others savours somewhat of fulsomeness and affectation. It is not merely that you may not be in accord on the objects and circumstances which present themselves, but to seek to unravel the delicate thread of our feelings at every turn and to make another feel an equal interest, is a task for which few are competent. In travel we should amass sensations rather than seek to anatomise them. No! The best of all Good Companions to take with you to a strange place is undoubtedly A MAP. If you have attained to that most enviable state, of being able to be alone; if you do not need the solace of human companionship; if you can be your own philosopher and your own friend, then a map need be your only guide. A map is more than a cheap, concise and portable guide, as we attempt to show here. It is as a guide, however, that the map appeals to the ordinary user. Having none of the drawbacks, and many of the best characteristics of the human guide, a map is greatly preferable to a second-rate guide. It speaks a language that needs no interpreter, whatever your nationality; it is vivid, picturesque and accurate, without being officious, statistical or dry. A good map is clear and easily understood. If it sometimes gets lost, at least it never retires from business on the accumulated gratuities of its clients.

'A map differs, too, in this. It is only intelligent if you are intelligent, only humorous if you have humour, has personality only if you possess one too. It flatters your genius; reflects your personality. If it gives you no joys and no surprises, there should be at least a suggestion that the fault does not perhaps lie with the map.'

THE WORLD IN MAPS is published by George Philip and Son, Ltd., 32 Fleet Street, E. C. 4, London.

MARKING GRAVITY STATIONS

Carl I. Aslakson, Hydrographic and Geodetic Engineer
U. S. Coast and Geodetic Survey

There is little that is new regarding methods and equipment for marking stations. Frequently, however, new combinations of methods previously employed are developed. During the winter season gravity stations were marked in a new manner that proved to be both expeditious and economical. The writer claims nothing original in the method described below. The procedure and equipment are too simple not to have been used before either in whole or in part.

Good quality marks requiring a minimum expenditure of time and a minimum amount of equipment are primary considerations on gravity work. Truck space is very limited and consequently there is no room to carry a supply of pre-cast marks. Metal removable forms commonly used for the tops of marks are unsuitable for gravity marks because the party moves before the concrete has set and the forms can not be removed without weakening the mark or delaying the party. Wooden forms are unsatisfactory as considerable time in required to construct them and lumber storage space is not available.

The essential equipment needed to establish a mark by the method used on the gravity party consisted of:

Equipment used in marking stations.

(1) A post-hole auger
(2) A square-edged, D-handle shovel
(3) A small, light weight mixing box
(4) A pouring funnel
(5) Paper forms for the tops of marks.

The Chief of the Section of Leveling has long been an advocate of the use of post-hole augers. A hole more than 8 inches in diameter can be dug quickly with this tool and is satisfactory for gravity monuments. Augers which are adjustable for holes from 6 inches to 10 inches in diameter may be purchased.

A D-handle, square edged shovel is entirely satisfactory.

The mixing box is made of 10-gauge sheet iron without reinforcing. Usually mixing boxes are heavily reinforced with boards and are consequently very cumbersome. Reinforcing is not necessary. A box made of 10-gauge sheet iron with joints riveted and soldered is very sturdy. A satisfactory box may be made from a single piece of sheet metal, 36 inches wide and 42 inches long. The edges are bent at right angles

to make the sides 6 inches high. The ends have a rather flat slope of about 30 degrees. This flat slope is important. It is much easier to mix concrete in this type of box than in one which has 45° or steeper slopes. All seams must be soldered as well as riveted. The complete cost of this box will be from $5 to $6.

The pouring funnel is an essential feature because without one it is impossible to pour concrete into an eight inch hole without knocking dirt from the side of the hole which will mix with and weaken the mark. The pouring funnel is made of 16-gauge, galvanized, sheet iron rolled into a tube 8 inches in diameter and 30 inches long. A flare or funnel of the same material is riveted to one end. The edge of this flare should be beaded and all joints soldered and riveted. The cost of this piece of equipment is about $2.50.

The paper forms complete the necessary equipment. These forms are made of heavy, glossy, red pressboard. They are carried flat, 50 forms requiring a space 1 foot by 2-1/4 feet by 3 inches. The edges of the forms are provided with two rows of holes in which common paper fasteners are placed when the form is rolled into shape for use. Two hoops of light steel are provided with each form to relieve the strain on the paper when the form is filled with concrete. These forms were constructed under the direction of the Chief of the Instrument Division at the request of the writer and may be obtained from the office on requisition. They proved to be highly satisfactory and are inexpensive. One is used for each mark and left permanently in place.

Pouring concrete into funnel.

Briefly, the manner of marking stations with this equipment is as follows:

(1) Dig a hole with the auger, belling the bottom.

(2) Mix concrete of desired proportions.

(3) Place the funnel in the hole with the flare flush with the surface of the ground and fill with concrete. When the hole is filled slowly withdraw funnel, puddling and adding more concrete as funnel is withdrawn to keep the concrete level with the ground surface.

(4) After the funnel is removed, work the paper form carefully into the concrete until the top is at the desired height above the ground surface. Then fill the form to the top, place the disk and smooth and level the top concrete surface with a trowel. If more than 6 inches of the form protrudes above the ground surface it is advisable to bank it with dirt as the form is filled.

(5) It is very important that the mixing box and funnel be thoroughly cleaned immediately after use. If even a small amount of concrete adheres to the surface of the galvanized iron and hardens, the entire surface will soon become coated with a scale, which will make them difficult to use.

An objection to the use of a post-hole auger for digging holes may be raised on the ground that it can not be used in all types of soil. This objection is not valid because there are few localities where a mark can not be established either in a hole dug with a post-hole auger or in a drill hole in outcropping bed rock. In establishing about 60 marks over seven States, no soil was found which was too hard to dig with an auger.

The principle advantage of the above described method is the short time required to establish an excellent, permanent mark. Under average conditions one man can dig the hole, mix the concrete, prepare the form, pour the concrete, stamp and set the disk and clean the equipment, in about thirty five minutes.

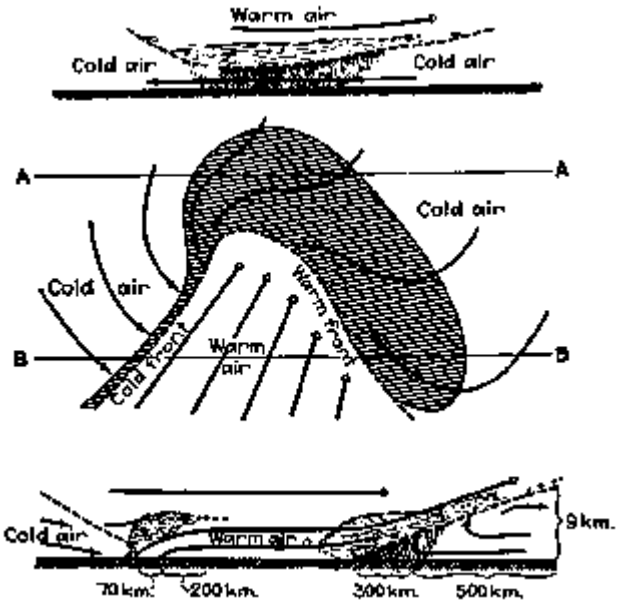

THE BJERKNES CYCLONE MODEL is used to gain an understanding of weather conditions. The central part of the figure shows the wind distribution in the horizontal found in any well organized disturbance. The double arrows represent warm air currents, and the single arrows cold currents. The upper portion of the figure shows a vertical section through AA of the central figure, while the lower portion shows a vertical section through BB. The vertically hatched areas indicate precipitation.

Courtesy Engineering News-Record, February 4, 1937.

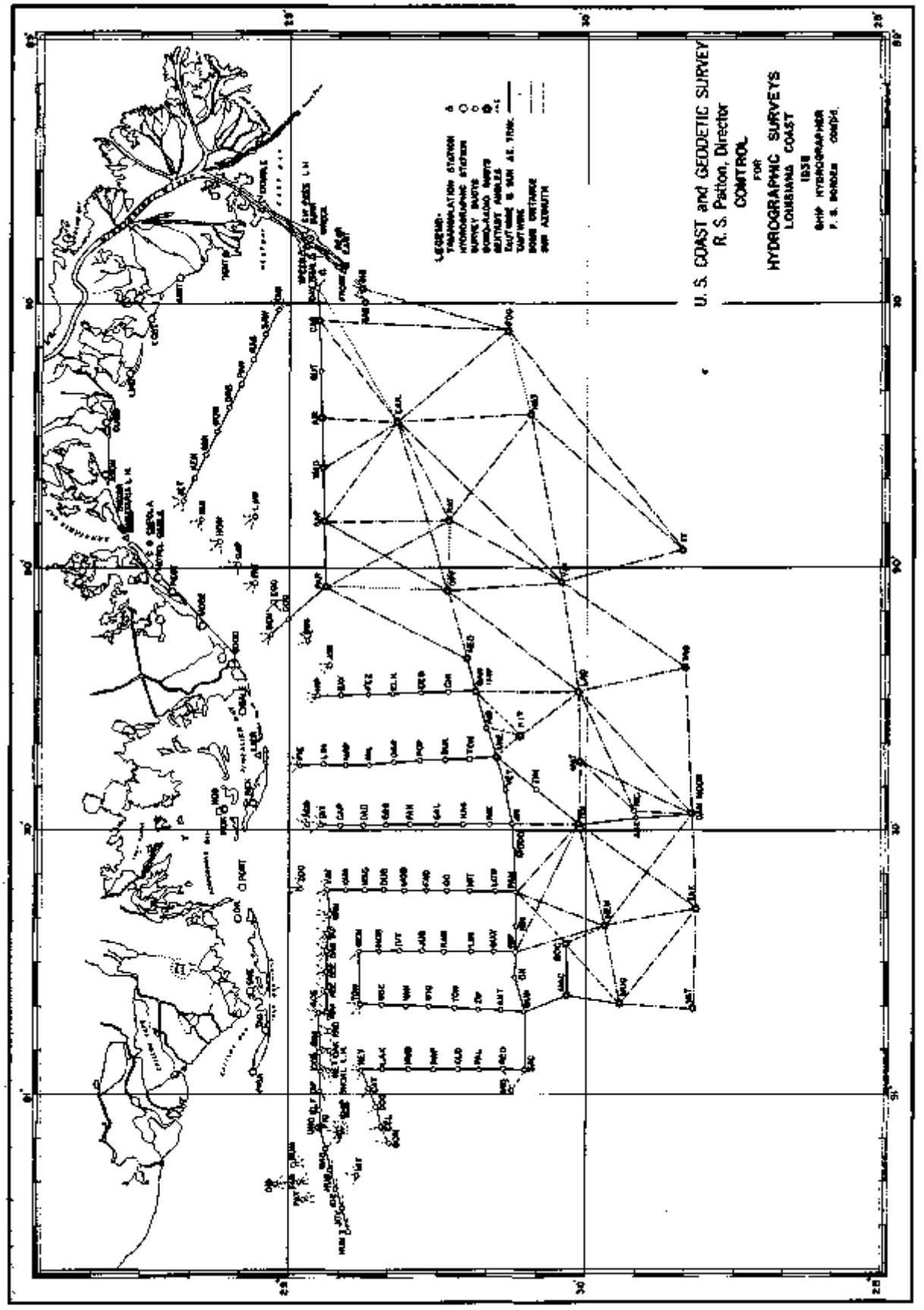
U. S. COAST and GEODETIC SURVEY
R. S. Patton, Director
CONTROL
FOR
HYDROGRAPHIC SURVEYS
LOUISIANA COAST
1938
LEGEND:
TRIANGULATION STATION
HYDROGRAPHIC STATION
SURVEY BUOYS
BUOY-LIGHT BUOYS
SECTIONAL ANGLES
LAUTIMAE & SUN AZ. TRAV.
LAUTWORK
DOOR DISTANCE
SUN AZIMUTH

TAUT WIRE AND SUN AZIMUTH TRAVERSE COMPUTATION

G. L. Anderson, Hydrographic and Geodetic Engineer
U. S. Coast and Geodetic Survey

The hydrographic surveys executed by the Ship HYDROGRAPHER during the 1936 field season were in an area in which it was necessary to use surveying buoys for the major part of the control. Lines of buoys were established normal to the shore line from the limit of visibility of shore signals out to the 11 fathom curve, a distance of about twenty miles. The buoys at the inshore end of each line were located by sextant angles to three or more shore signals and their positions were determined graphically on aluminum sheets on a scale of 1:40,000. Closed traverse loops were formed by two adjacent lines of buoys and the connection at the outer ends. The corrected taut-wire distances and sun-azimuths between adjacent buoys were computed in a plane traverse to give the positions of the buoys in these loops. All except the outer two lines of buoys are used in the computations of two traverse loops, each line of buoys being used with the adjacent line on each side to form a traverse loop. The final positions of these buoys are the mean values obtained from the two traverse loops.

Plate I, "CONTROL FOR HYDROGRAPHIC SURVEYS", shows the relative positions and the method of location of all buoys used during the season.

The computation and adjustment of two adjacent traverses are given in detail. In the form, COMPUTATION OF TRAVERSE, in columns No. 2 and 3 are entered the corrected sun azimuths and taut-wire distances between adjacent buoys. The sines and cosines of the sun azimuths are entered in columns No. 4 and 5. The latitude differences and departures in columns No. 6, 8, 10 and 12 are obtained by multiplying the taut-wire distances by the sines and cosines of the sun azimuths. The loop closures are determined by taking the difference between the totals of the north and south columns for latitude and the like difference of the east and west columns for longitude. These are then compared with the differences between the geographic positions of the two fixed inshore buoys as scaled from the 1:40,000 scale aluminum sheets. To the differences of longitude it is necessary to apply a correction for the convergence of meridians before the loop closures can be determined. This correction is obtained by multiplying the difference between the values of one minute of longitude at the north end and at the south end of the loop by the longitude difference between the two inshore fixed buoys. After the latitude and longitude closures are determined, the loop adjustment corrections are applied to the latitude differences and departures as entered in columns No. 7, 9, 11 and 13. The corrected differences of latitude and longitude in meters are entered in columns 14 and 17. These corrected differences of latitude and longitude are then applied to the geographic position of the fixed buoy and the adjusted latitudes in minutes and meters are entered in columns 15 and 16, and the adjusted longitudes in columns 18 and 19.

The final positions of the buoys in the line PIE - UKE are obtained by taking the means of the positions from the two traverses of which the line of buoys form a part.

It is believed that the above described method of obtaining buoy positions is superior to other methods for similar areas. For the data available this method is believed to give more accurate positions than any graphic method and the resulting positions are obtained more quickly. The motion and vibration of the ship at sea make accurate location by graphical means very difficult whereas they do not interfere with computations.

At the beginning of the season graphic methods were used to locate the control buoys. A projection, scale 1:80,000, had been constructed on an aluminum sheet and this scale was necessary in order to include sufficient area of the working grounds. The positions scaled from this sheet were to be used in hydrographic surveys, scale 1:40,000. Since the

enlargement of the scale of a control survey is extremely undesirable, other possible methods were considered. An excessive number of aluminum sheets would have been required to cover the area on a scale of 1:40,000. The method finally adopted and which is described herein requires a series of aluminum sheets, scale 1:40,000, which include the shore control and the buoys along the shore at the inshore end of the traverses; and an offshore aluminum sheet at the scale of the R.A.R. survey for the graphic location of the offshore R.A.R. buoys.

COMPUTATION OF TRAVERSE

PIE to BIT

(1) BUOY NAME	(2) SUN AZIMUTH	(3) TAUT WIRE DIST	(4) SINE	(5) COSINE	(6) (7) LATITUDE DIFF. N c/n*		(8) (9) S c/n*		(10) (11) DEPARTURES E c/n*		(12) (13) W c/n*		(14) (15) (16) LATITUDE CORR. DIFFS	ADJUST-ED		(17) (18) (19) LONGITUDE CORR. DIFFS	ADJUST-ED	
	° '	m.			m.	m.	m.	m.	m.	m.	m.	m.	m.	'	m.	m.	'	m.
PIE													(28°)	58	1244	(90°)	22	810
LIN	179 08	4290	.01513	.99989			4290	+ 3	65	- 3			-4293	56	645	-62	22	748
MAP	179 28	4181	.00931	.99996			4181	+ 3	39	- 3			-4184	54	156	-36	22	712
NIL	175 54	4393	.07150	.99744			4382	+ 3	314	- 3			-4385	51	1312	-311	22	401
OAR	178 07	4597	.03286	.99946			4595	+ 3	151	- 3			-4598	49	409	-148	22	253
PAD	178 08	4878	.03257	.99947			4875	+ 3	159	- 3			-4878	46	1072	-156	22	97
SUP	178 08	4891	.03257	.99947			4889	+ 3	153	- 3			-4892	44	75	-150	21	1575
TOM	177 57	4585	.05577	.99936			4582	+ 3	154	- 3			-4585	41	1051	-161	21	1414
UKE	178 23	4622	.02821	.99960			4620	+ 3	130	- 3			-4623	39	103	-127	21	1287
VEY	253 31	5725	.95380	.30043			1720	+ 3			5461	+ 3	-1723	38	227	+5464	25	232
JIM	255 50	12469	.96959	.24474			3052	+ 4			12090	+ 9	-3056	37	741	+12099	29	347
INK	358 58	4276	.01803	.99984	4275	- 3					77	+ 3	+4272	39	1319	+80	29	427
HAG	358 47	4618	.02123	.99977	4617	- 3					102	+ 3	+4614	42	591	+105	29	532
GAL	359 24	4843	.01047	.99995	4843	- 3					51	+ 3	+4840	44	1737	+54	29	586
FAN	359 58	4715	.00058	1.00000	4715	- 3					3	+ 3	+4712	47	907	+6	29	592
EGG	0 06	4564	.00175	1.00000	4564	- 3			8	- 3			+4561	49	1774	-5	29	587
DAD	359 09	4353	.01483	.99989	4353	- 3					65	+ 3	+4350	52	582	+68	29	655
CAP	359 55	4271	.00145	1.00000	4271	- 3					6	+ 3	+4268	54	1156	+9	29	664
BIT	0 47	3777	.01367	.99991	3777	- 3			52	- 3			+3774	56	1335	-49	29	615

SUMS		35618	39266	1236	12394
			35615		1235
DIFFERENCES BY TRAVERSE			3651		11159
POSITIONS SCALED FROM ALUMINUM SHEET:		m.			m.
PIE	28° 58'	1244		90° 22'	810
BIT	28° 56'	1235		90° 29'	615
DIFFERENCES	2'	' 9		6'	1430
DIFFERENCES METERS		3703			11176
CONVERGENCE OF MERIDIANS CORR.			38 meters		11216
DIFFERENCES BY TRAVERSE		3651			11159
CLOSURES	LAT.	-52		LONG.	-57

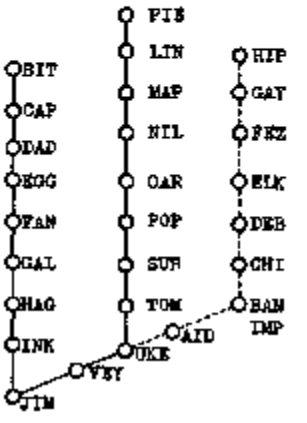

*LOOP CLOSURE ADJUSTMENT

In the COMPUTATION OF TRAVERSE the Monroe computing machine was used to advantage. The taut-wire distance was multiplied on the machine by the natural sine or cosine to obtain respectively the difference in latitude and departure. At first a table was computed from which the difference in latitude and departure were taken directly, but the use of the table was abandoned in favor of direct computation when the extent of the necessary table was learned. The computing machine was used also to obtain the final position in minutes and meters of latitude and longitude by applying the corrected differences to the values for the preceding buoy in the traverse.

COMPUTATION OF TRAVERSE

PIE to HIP

(1) BUOY NAME	(2) SUM AZIMUTH	(3) TAUT WIRE DIST	(4) SINE	(5) COSINE	(6) (7) LATITUDE DIFF. N o/n*		(8) (9) S o/n*		(10) (11) DEPARTURES E o/n*		(12) (13) W o/n*		(14) (15) (16) LATITUDE CORR. DIFFS	ADJUST-ED		(17) (18) (19) LONGITUDE CORR. DIFFS	ADJUST-ED	
	° ′	m.			m.	m.	m.	m.	m.	m.	m.	m.	m.	′	m.	m.	′	m.
PIE													(28°)	58	1244	(90°)	22	810
LIN	179 06	4290	.01513	.99989			4290	- 4	65	- 2			-4286	56	652	-63	22	747
MAP	179 28	4181	.00931	.99996			4181	- 4	39	- 2			-4177	54	169	-37	22	710
NIL	175 54	4393	.07150	.99744			4382	- 4	314	- 2			-4378	51	1332	-318	22	398
OAR	178 07	4597	.03285	.99946			4595	- 4	151	- 2			-4591	49	435	-149	22	249
PAD	178 08	4878	.03257	.99947			4875	- 4	159	- 2			-4871	46	1105	-157	22	92
SUR	178 08	4691	.03257	.99947			4689	- 4	153	- 2			-4685	44	114	-151	21	1569
TOM	177 57	4585	.03577	.99935			4582	- 4	165	- 2			-4578	41	1077	-163	21	1406
UKE	178 23	4622	.02821	.99960			4620	- 4	131	- 2			-4616	39	155	-129	21	1277
AID	74 07	5831	.96182	.27368	1596	+14			5608	- 5			+1610	39	1765	-5603	18	562
(IMP	357 56	5115	.03606	.99935	5112	+ 4					184	+ 2	+5116	41	40	+186	14	126)
BAN	73 40	7209	.95964	.28123	2027	+14			6918	- 5			+2041	41	112	-6913	14	165
CHI	358 21	5042	.02879	.99959	5040	+ 4					145	+ 2	+5044	43	1462	+147	14	318
DEB	358 43	5119	.02840	.99975	5117	+ 4					115	+ 2	+5121	46	1042	+117	14	429
ELK	358 15	5091	.03056	.99953	5089	+ 4					155	+ 2	+5093	49	594	+157	14	586
FEZ	358 54	4669	.01920	.99982	4668	+ 4					90	+ 2	+4672	51	1572	+92	14	678
GAY	2 59	5115	.05205	.99864	5108	+ 4			266	+ 4			+5112	54	1143	+268	14	416
HIP	353 03	4647	.12100	.99265	4613	+ 4					562	+ 4	+4617	57	219	+566	14	982
SUMS					33258		36214		13959		1067							
							33258		1067									
DIFFERENCES BY TRAVERSE							2956		12902									
POSITIONS SCALED FROM ALUMINUM SHEET:																		
HIP				28° 57′	m. 219				90° 14′		m. 982							
PIE				28° 58′	1244				90° 22′		810							
DIFFERENCES				1′	1025				7′		1452							
DIFFERENCES METERS					2872						12824							
CONVERGENCE OF MERIDIANS CORR.							+ 36 meters				12860							
DIFFERENCES BY TRAVERSE					2956						12902							
CLOSURES				LAT.	+ 04				LONG.		+ 42							

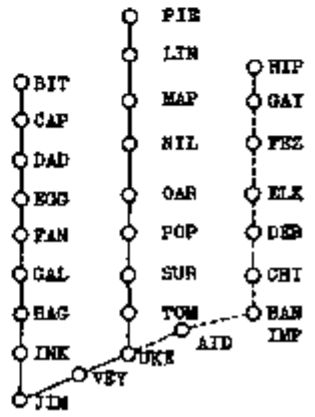

*LOOP CLOSURE ADJUSTMENT

ADJUSTED POSITIONS OF BUOYS ON LINE PIE-UKE

	LATITUDE				LONGITUDE			
		Trav.#1 m.	Trav. #2 m.	Mean m.		Trav.#1 m.	Trav.#2 m.	Mean m.
LIN	28° 56'	645	652	648	90° 22'	748	747	748
MAP	28 54	156	169	163	90 22	712	710	711
NIL	28 51	1312	1332	1322	90 22	401	398	400
OAR	28 49	409	435	422	90 22	253	249	250
PAD	28 46	1072	1105	1088	90 22	97	92	94
SUR	28 44	75	114	95	90 21	1575	1569	1572
TOM	28 41	1031	1077	1054	90 21	1414	1406	1410
UKE	28 39	103	155	129	90 21	1287	1277	1282

The computed positions of the buoys at the offshore ends of the traverses were plotted on an aluminum sheet, scale 1:80,000, and from them the positions of offshore R.A.R. "buoys were obtained graphically on the sheet.

The approximate lengths and closing errors of the computed traverses are as follows:

KEY - TON	40 miles,	Lat.	-115 m.	Long.	-48 m.
TON - GEM	39 miles,	Lat.	- 45 m.	Long.	-84 m.
GEM - VIM	41 miles,	Lat.	+ 10 m.	Long.	+ 29 m.
VIM - BIT	42 miles,	Lat.	- 61 m.	Long.	-128 m.
BIT - PIE	47 miles,	Lat.	+ 52 m.	Long.	- 57 m.
PIE - HIP	43 miles,	Lat.	- 84 m.	Long.	- 42 m.
JET - TAB	22 miles,	Lat.	+ 7 m.	Long.	+ 11 m.
PAR - DAY	30 miles,	Lat.	+ 1 m.	Long.	-135 m.

Average closing error per mile, Lat. 1.2 m., Long. 1.8 m.

INVESTIGATION OF MARINE CASUALTIES

Under a recent act of the Congress provision was made for investigation of marine casualties by one of three boards, A, B, and C. Casualties involving loss of life will be investigated by the A board, consisting of representatives of the Departments of Commerce and of Justice and of the Coast Guard. This board is not limited in its functions but is given the broadest scope. It is required to go into the fundamental causes of an accident and to establish definitely the responsibility. The board will investigate the possibility of structural failures, of laxity in inspection by Government inspectors, culpability of officers and crew, inadequate equipment, failure of aids to navigation and other features developed during the inquiry.

A marine casualty involving serious destruction of a ship and property, but not including loss of life, will be investigated by the B board. This board will consist of a Supervising Inspector and two traveling inspectors of the Bureau of Marine Inspection and Navigation. All matters of a less serious character not covered by the A and B boards will be considered by the C board. Personnel of this board will also consist of members of that Bureau who will be especially designated by the Secretary of Commerce. It is expected that this board will be mainly concerned with cases affecting personnel such as neglect of officers in minor groundings or accidents and of misdemeanors by members of the crew of vessels.

ALEUTIAN ISLANDS SURVEY

Extracts from 1936 Season's Report of A. M. Sobieralski,
Hydrographic and Geodetic Engineer,
Commanding Officer, U. S. Coast and Geodetic Survey
Ship SURVEYOR, May 1, 1937.

* * * * * * * * * * *

Commander Sobieralski has had over 12 years' experience surveying in Alaskan waters, and the officers and crews of vessels which frequent the Aleutian Archipelago, will know that he has only mildly expressed the hazards of surveying those remote and dangerous waters. (Editor).

* * * * * * * * *

The need for a comprehensive survey of the Aleutian Islands has long been recognized, but since the most pressing requirements of navigation were met by a good reconnaissance survey of the Fox Islands Passes made in 1901, the ships of the Coast and Geodetic Survey were used in other parts of Alaska where demands for surveys were more urgent. Recently, an awakened interest in these islands, made it advisable to undertake these long postponed surveys - - -.

During the seasons 1934 and 1935 the SURVEYOR completed the survey of the Krenitzin group while the DISCOVERER extended control westward to Bogoslof and Umnak Islands, and had completed the offshore work along the north side of the islands from Unimak Pass westward beyond Bogoslof Island.

Control had been extended by the SURVEYOR along the south side of Unalaska to a junction with the DISCOVERER'S work in the vicinity of Kashega Bay on the line Spray-Juan.

- - - - - - - - - -

Leaving Seattle on May 6, the vessel arrived at Ketchikan on the 9th where the sales agency and the boat house were inspected in accordance with instructions dated March 25, 1936 and March 27, 1936. Proceeding via Cape Ommaney and carrying a dead reckoning line of soundings along the parallel of 58° N., the route through Whale Passage was chosen because of a barometric depression to the westward. An incident of the voyage was the receipt of a radio message when off Larsen's Bay that a woman was in urgent need of medical assistance. As we were only an hour's run distant, the medical officer was sent ashore and arrived in time to deliver a child.

The vessel arrived at Dutch Harbor on May 17, and proceeded the next day to Kashega, establishing a camp there and on Umnak Island, then returned to Dutch Harbor to launch the WILDCAT and make some repairs to the ship's boiler.

- - - - - - - - - - -

In the early part of September some night observing was done using four observing parties in an attempt to complete the long lines to Umnak Island. This work was not completed when on September 9 an unusual succession of storms prevented all field work for sometime. On September 17, Lieutenant Reese and five men were left in camp near Wislow Island to complete the observing on the triangulation scheme in the vicinity of Cape Cheerful while the vessel took up work in the vicinity of Umnak Pass.

On Sunday evening, September 27, news was received of the tragic loss of Lieutenant Reese and Quartermaster Max McLees.* They had left camp on September 26 in a dory with outboard motor to get supplies and to communicate with the ship, and the men remaining in camp had seen the dory capsize and drift seaward with the men clinging to it. They were helpless to give any assistance and no word of the accident was received until two of the men made the long hike to Unalaska over extremely difficult country. A Coast Guard cutter immediately put to sea, although a gale was blowing at the time, but there was little hope even then, some 36 hours after the accident, in view of the terrific gale which swept this area. The SURVEYOR got under way at 2 a.m., and proceeded to the vicinity and spent the next three days searching the area.

This tragedy deeply affected the party, coming so close to the end of the season, as steps had already been taken to close the season's work. The camps were picked up and field work closed on October 4.

Weather Conditions

The 'Aleutian Low' is a recognized meteorological condition. At frequent intervals a depression travels roughly along the axis of the islands, usually to the southward. As the depression approaches, southeasterly to easterly gales occur, their force depending on the intensity of the depression. Southeasterly winds are almost always accompanied by rain and mist, but in the lee of high land there may be an area of clear weather. As the depression passes, the wind shifts to northwest or west, bringing clouds and fog from the Bering Sea, which may be stopped by the high ranges, but drift through the passes and the low places between ranges. Under such conditions, there may be some clear weather on the south side but especially in July the fog is liable to drop down suddenly.

If the depression passes to the northward, the wind will shift to the southwestward, bringing fog and low clouds.

The few spells of clear calm weather occur when the barometer is moderately high. But a high barometer may bring calms with fog or sometimes strong northwesterly winds. A fine day is usually followed by a southeasterly or southwesterly wind.

The direction of the wind is controlled by the path of the depression and the lack of observing stations to the westward makes it impossible to determine the path accurately. Many depressions in the summertime progress slowly and eventually fill up, causing a long spell of uncertain weather.

In the early part of September there is usually a spell of good weather, but sometime about the middle of the month the interval between the depressions decreases and their intensity increases. There is little working weather after that.

The westerly and northwesterly winds predominate during the summer, but the southeasterly winds are generally stronger. Thus the north shore is exposed to more wind, but the swell is not as heavy and goes down more quickly than on the south shore, so it cannot be said that one side is any better than the other, for survey work.

Weather records at a protected inlet such as Dutch Harbor give little indication of the conditions at more exposed localities, for there are

*Reese Bay, a previously unnamed bay on the north shore of Unalaska Island between Cape Cheerful and Cape Wislow, has been named in honor of Lieutenant Reese; and a large glacial lake just inshore from Reese Bay has been named McLees Lake in honor of Quartermaster Max McLees. (Editor).

very many days when it is clear in Dutch Harbor and dense fog just a few miles away. The record at such a point as Samalga off the southwest end of Umnak would show low visibility during the whole summer with very few days of sunshine.

It is evident that except when a general storm covers the area there are patches of clear weather on one side or the other. In fact when we have several camp parties in different localities, there are few days when all parties are prevented from work. The advantage of being able to pass from one side to the other to take advantage of these spells is subject to only one drawback, - the good spells always end in fog or mist so that the passages from one side to the other must almost always be made under these adverse conditions, and navigating these passes, with their strong currents and tide rips, in fog requires particularly careful navigation.

- - - - - - - - - - -

The weather conditions make it necessary to carry on triangulation in a haphazard way. Stations have to be established without sufficient reconnaissance; after the signals have been built, a month or more may elapse before it is possible to occupy them; in the meantime gales may have disturbed the signals. In a scheme with lines averaging 10 miles in length there are only a few days during a season when all the stations can be seen. Hence it is necessary to observe directions here and there as they show. Under these conditions, it is no wonder that it is difficult to get good closures. The alternative, however, of devoting a large party exclusively to triangulation would be enormously expensive. Where longer lines are involved it will be necessary to keep parties in camp at the stations.

Much of the topographic work was accomplished by parties in camp, near a triangulation station while waiting for observing weather. A dory with an outboard motor was used for transportation and hauled out on the shore when not in use. Naturally, the work under such conditions is extremely arduous and hazardous. In milder climates, an occasional ducking is more or less a joke, but in this country, where the water is so cold, the constant wetting in making landings taxes the hardiest constitution. The boats are quite frequently swamped making it necessary for the men to swim for shore.

Air Photographs

Air photographs of part of Unalaska Island eastward of Kashega Bay were taken in 1935. Prints of these were furnished to this party. A projecting camera was built and as control became available, the shore line was enlarged and roughly oriented on the planetable sheets. This method facilitated the field work considerably. The signals for hydrographic work were all located on the planetable sheets and "spotted" on the photographs, but detail was 'rodded in' only when not distinct on the photographs. This was a great saving, - especially where clusters of rocks, et cetera, occurred. On the planetable sheet frequent cuts were taken to mountain peaks and vertical angles recorded. No attempt was made to determine elevations from the photographs, but since the positions of the peaks could be obtained from the radial plot, the cuts were merely for identification and the elevations were computed from the vertical angles. Of course, a few prominent peaks were located by planetable cuts to control the photographs. The area covered by this method includes Skan Bay, Kashega Bay and Pumicestone Bay, an extremely rugged area with elevations up to 4000 feet. The flights were not laid out for the best results in plotting, but it was a remarkable achievement to obtain the photographs at all under the weather conditions prevailing in this area. I have seen the airplanes leave at daylight in perfectly clear weather and within an hour the bay would be enveloped in thick fog, making it necessary for them to make a landing under such difficult conditions.

Unfortunately, the photographs covered only a small portion of the area to he surveyed.

- - - - - - - - - - - -

In accordance with instructions dated February 28, 1936, a line (of hydrography) was run southeastward from the vicinity of the west end of Unalaska Island across the Aleutian Deep. The greatest depth obtained was 3700 fathoms.

- - - - - - - - - - - -

A marked decrease in the number of experienced seamen applying for shipment was noticeable after settlement of the labor troubles on the Pacific Coast. We have plenty of applications from inexperienced men, but a certain proportion of experienced seamen are essential in operating a vessel of this type, particularly in hoisting and lowering the heavy launches, making landings, and related activities. Permanent employment will attract more men, and there is need for some action in this direction.

The accomplishments of the season speak better for the work of the officers and men than any statement regarding their qualifications.

The smoothness with which the organization runs, requiring a minimum of supervision is due in large measure to the fact that the chief petty officers have been attached to the vessel for many years and it is a strong argument in favor of permanent appointments for these positions.

SCOTTISH BARD AND ENGLISH ROVER

Licht Ke'er - Scotched

I'll jist begin by saying that my name's no' kent at a'
In mountaineering circles, but it's no my fau't ava'.
I've never tackled Everest--mind, no but what I'm game--
But I've dune a pickle climmin' on a mountain nearer hame.

I'm fair forfeichan spielin' up aul' Criffell ilka day,
Whilst puir aul' John S. Harrison near conked oot on the way;
For luggin' batteries up a hill is no' exactly fun;
John swore the hale clanjamferie wad wey gey near a ton.

Ae nicht I spent upon that hill I got an unco fricht,
When I was gettin' sprauchled doon, the aul' mune dimmed her licht,
I waded through the heather an' tummelt owre a rock,
Then waunnert in the brecken an' got hame at fowre o'clock.
I've nae fau't tae fin' wi' Criffell--much--it's glorious through the day,
But getherin' roon' the tap at nicht, the clouds get cauld an' grey--
I'll maybe try the Jungfrau next, an' syne the Matterhorn--
But for the meenit, Criffell gars me wish I'd ne'er been born:

The lament comes through the first Lightkeeper in Scotland, engaged in the new Triangulation of Great Britain.

Would that this Bard might have a season on Bilby portable steel towers!

* Courtesy "Empire Survey Review", Vol. IV, No. 23, 1937, p. 59.

AUTOMATIC BRAKE SOUNDING MACHINES

F. G. Engle, Hydrographic and Geodetic Engineer, Retired
U. S. Coast and Geodetic Survey

Sounding machines, with improved control mechanisms and automatic brakes, designed by Commander Engle, were used for the first time during the past season by the Ships SURVEYOR and DISCOVERER. The Commanding Officers of these two vessels report that the machines proved to be definitely superior to sounding machines formerly used and the automatic brake was a very desirable feature. This ingenious device permits the wire to pay out rapidly and stops the reel automatically when the bottom is reached. This results in a saving of time and more accurate soundings as the wire is not allowed to pay out after the lead strikes bottom. Commander Engle's description of the sounding machine follows.

(Editor)

This machine is for use with a 30-pound sinker in connection with a power drive unit, such as an electric motor, gasoline engine or launch propelling engine. The drive shaft extends beyond the frame and has a keyway for fitting a gear for chain drive or a pulley for belt drive from the power unit.

The reel revolves on a steel shaft, which is threaded into the frame on the operating side, and which carries a split collar in a housing formed in the hub of the reel. Rotating the shaft about 30 degrees, by means of the control handle keyed to it, moves the reel laterally between a cone friction brake attached to the operating side frame and the cone friction drive. Wire is payed out by the slipping of the reel on the cone brake and it is hove in by engagement of the reel with the drive friction cone, the reel revolving freely on the shaft. The drive member is a hollow shaft fitted in the frame bearing and over the fixed control shaft.

An automatic brake is provided to stop the reel instantly when the sinker reaches bottom. This brake is of the band type and is actuated by a spring exerting a tension of from 40 to 70 pounds. The spring exerts its tension in the direction of rotation of the reel when paying out, so that the inertia of the reel assists the spring in tightening the brake when it comes into action. The band brake is held in the off position by a catch, or trigger, as long as there is sufficient tension on the wire to hold down a tension pulley against the action of two springs. This tension pulley rotates freely on a bar connecting two arms. The two arms rotate on bearings concentric with the shaft under the action of a spring on each arm. The sounding wire is taken off the under side of the drum and over the tension pulley and is then led over the registering sheave.

The trigger holding the band brake in the off position is released by a cam on the tension pulley arm, the cam being adjustable on its arm to allow for different angles of lead of the wire between the drum and the registering or fair-lead sheave. It is so placed that the trigger will be tripped only after the tension pulley assembly has rotated 15 or 20 degrees from the position it occupies under the normal restraining tension of the wire when paying out at suitable speed. As a restraining or paying out tension of the sounding wire of from 5 to 10 pounds will be required for proper operation of the automatic brake mechanism with ordinary angles of lead of the wire, a sinker weight of not less than 30 pounds will be necessary, and the fair-lead sheave should be mounted low and well in front of the machine to keep the lead of the wire low and thus extend the tension arm springs as much as possible when paying out.

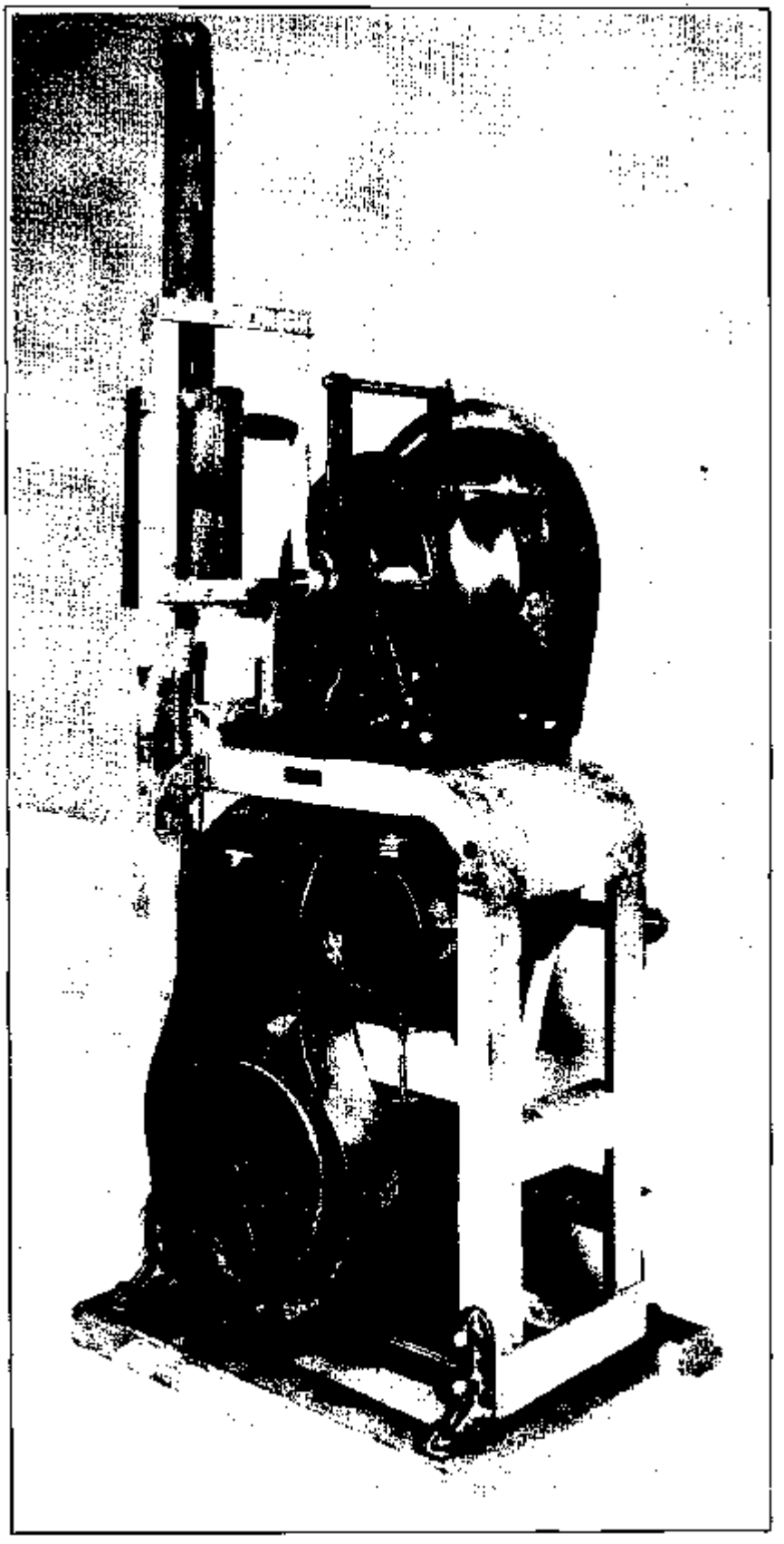

AUTOMATIC BRAKE SOUNDING MACHINE

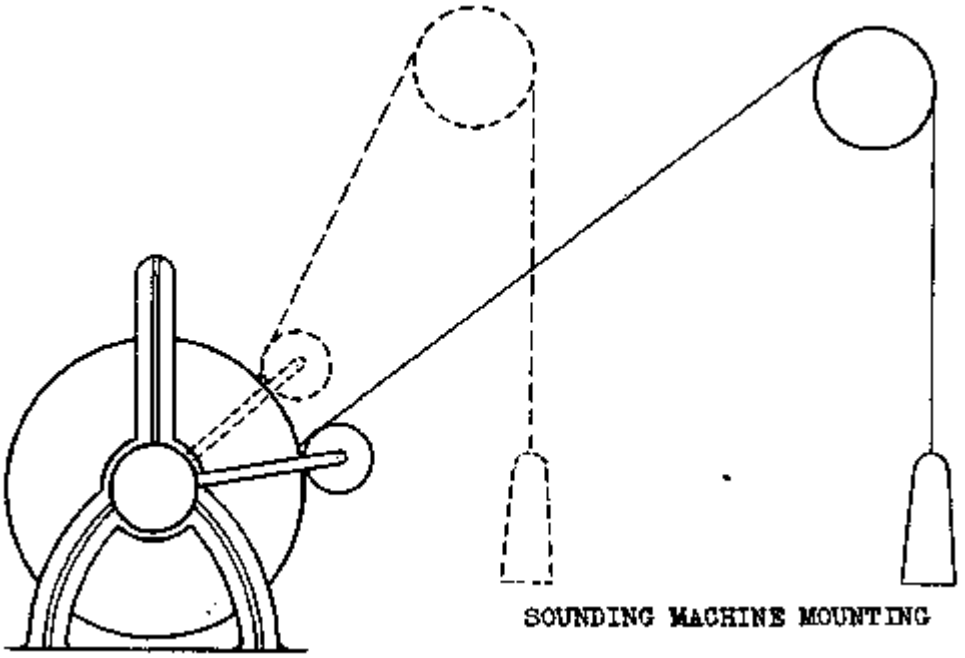

SOUNDING MACHINE MOUNTING

Dotted lines show improper mounting of fair-lead and consequent position of tension arms when paying out. Full lines show proper mounting.

Before paying out, the reel is held against the cone brake by the control handle with only enough pressure to keep the reel from rotating under the weight of the sinker. The automatic brake is then released by means of a handle provided for this purpose of the wire is allowed to pay out at suitable speed under the restraint of the hand brake. Sufficient restraint must be held on the wire by means of the hand brake to keep the tension pulley down several degrees below the point where it will trip the brake trigger. If the wire is allowed to pay out too fast, the tension of the wire will be decreased to a point where the tension pulley arms will spring up and release the automatic brake trigger before the sinker reaches bottom. With a sinker of about 30 pounds weight it should be possible to pay out at a speed of 150 to 200 fathoms per minute in depths up to 200 fathoms.

When the sinker strikes bottom and the wire slacks, the tension pulley arms will rotate under the action of their springs, tripping the brake trigger and taking up the slack in the wire resulting from the rotation of the reel between the instant the sinker strikes bottom and the stopping of the reel by the brake. As the brake action is very positive most of the slack is due to the inertia of the tension pulley assembly, which causes a slight delay in tripping the brake.

When starting to heave up, the band brake must first be released by the handle provided for the purpose. The control handle is then rotated clockwise to the clutch position and only sufficient pressure should be applied to the control handle in heaving up to prevent the clutch from slipping. As the leverage between the control handle and reel motions is quite high, considerable pressure is exerted on the clutch by a moderate pressure on the control handle. Excessive force on the control handle in either the brake or clutch position will severely strain the frames.

For holding the weight of the lead on the hand brake, the latter can be held in the applied position by means of a heavy rubber band or section of inner tube secured to a standard attached to the frame, the other end

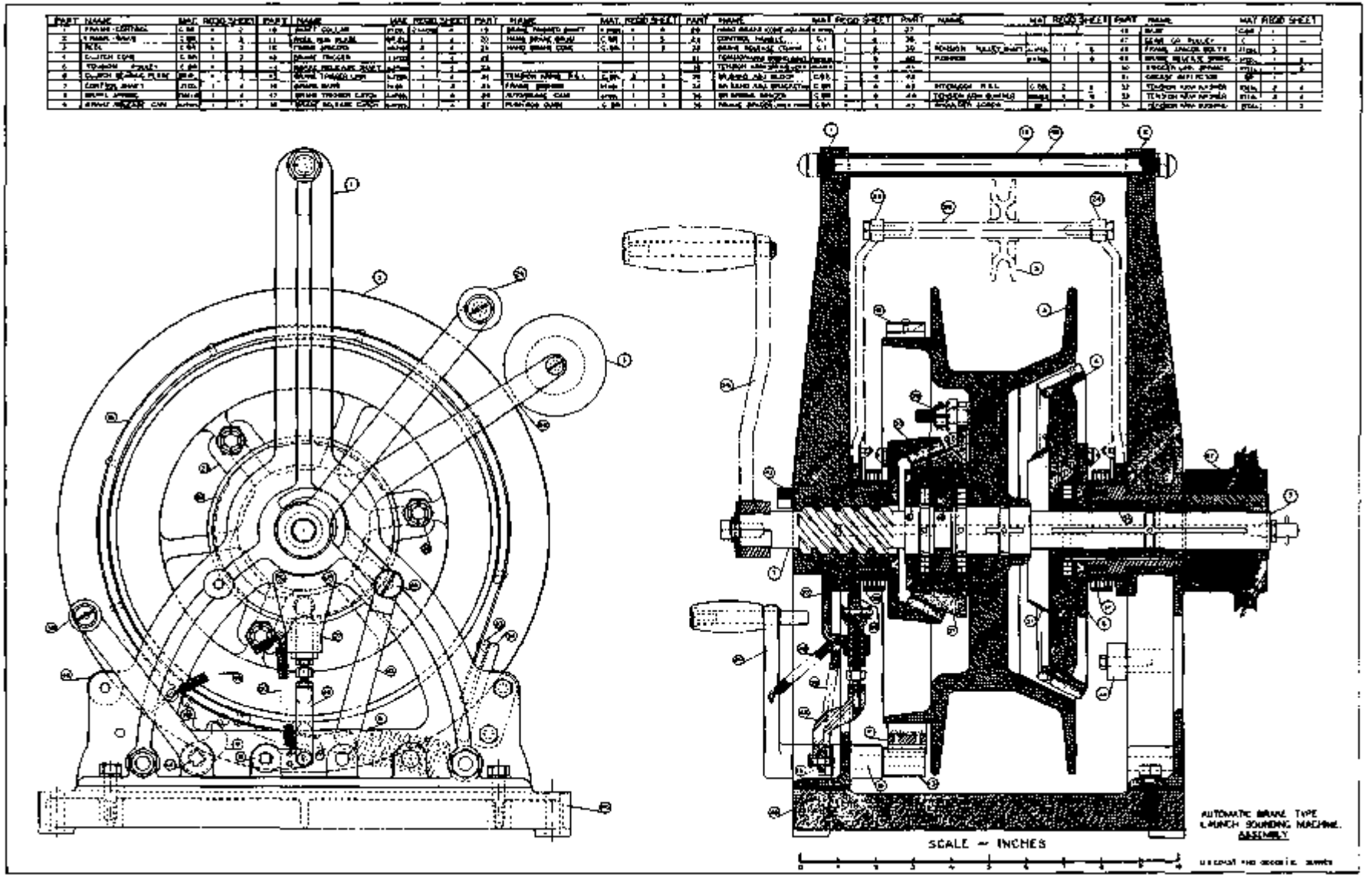
SCALE ~ INCHES
AUTOMATIC BRAKE TYPE
LAUNCH SOUNDING MACHINE.
ASSEMBLY

of the rubber band being slipped over the control handle in such a way that it can be detached quickly.

The pressure of the clutch against the frame, and of the shaft collar in the reel housing, is taken on three roller thrust bearings, lubricated through the drilled shaft and oil grooves from an alemite fitting in the end of the shaft.

As the clutch and cone brake linings wear, the throw of the control handle between the clutch and brake positions will increase. It can be brought back to the desired amount by means of the three adjusting nuts securing the cone brake drum to the reel. The adjustment should be made by turning each nut about one-half turn at a time, being careful not to bind them, and repeating the process until the desired throw is secured.

An adjustment for wear of the automatic brake lining is provided by means of a bracket having a notched surface and a slot for the bolt which secures the end of the brake band to it by means of a similarly notched block attached to the brake band.

An interlock is provided to prevent the application of the automatic brake when the clutch is engaged and conversely to prevent the engagement of the clutch until the automatic brake has been released. This interlock consists of an offset crank, which pivots on a shoulder screw attached to the frame. The lower arm of the interlock is attached to the movable end of the automatic brake band and the upper arm is formed so as to land on the control arm hub if the brake trigger is accidentally tripped while the clutch is engaged and prevents the application of the brake. When the automatic brake is in the applied position, the upper end of the interlock interposes between the control arm hub and the frame hub, preventing the engagement of the clutch.

Provision is made for left-hand as well as right-hand operation of the machine, that is, leading the wire from the left side of the machine as viewed from the operator's position, as well as from the right side. This is accomplished by providing the front frame with opposite drilled bosses for the trigger and brake release shafts and holes for attachment of the brake adjusting bracket and the interlock.

Right and left-hand brake brackets and interlocks are furnished as these parts are not reversible.

The machine can be dismantled readily by sliding the operating side frame and attached brake assembly off the shaft. To do this, release the automatic brake on its trigger; remove the two operating frame holding down studs, the control and brake release handles, the tension pulley shaft stud, the top frame spacer nut, the lower left frame spacer nut and the rear lower right frame spacer nut. It will be necessary to rotate the shaft in the frame as the latter is withdrawn and the weight of the reel should be supported on the wooden wedge provided for this purpose when withdrawing the frame.

In assembling, the automatic brake should be in the release position so that it can slide on over the brake drum. The frame holding down studs should be set up tight before the frame spacer nuts are tightened. The machine should never be operated with the spacer nuts loose as the spacer bolts must take the thrust of the clutch and hand brake. This is considerable, due to the high leverage of the worm screw, and the machine may be damaged if operated with the spacer nuts loose.

The bolt holding the end of the band brake to its bracket should be kept tight as there is a strong tension on the band when the brake acts to stop the reel. As the band lining wears, it should be compensated for by adjustment in order to keep the brake spring effective and for proper operation of the interlock.

When heaving in, it will be necessary to lay the wire evenly on the drum by drawing the bight of the wire from side to side as with other machines. The tension pulley shaft and other working parts should be kept well lubricated but care should be taken not to use too much oil in the shaft alemite oiler, for it may find its way to the cone brake and clutch friction linings. Grease should not be used.

If desired, the machine can be operated without the automatic brake by not reeving the wire over the tension pulley, or by removing the band brake.

When the machine is not in use, the automatic brake should be tripped so as not to weaken the brake spring by keeping it fully extended.

BRIDGE WINDSHIELDS

R. F. A. Studds, Hydrographic and Geodetic Engineer
U. S. Coast and Geodetic Survey

The accompanying drawing shows a type of windshield for ships' bridges which has a deflector forward of the shield. The spacing between the two is wider at the bottom than at the top, thus building up a wind pressure which directs the wind above the plane of the top of the shield, up and over the observer's head.

Models were constructed by Mr. J. Carl deJonge and tested with a battery of four 18" electric fans placed about 10 feet away. The centers of these fans were spaced l'-3", 3'-0", 4'-9" and 6'-6" above the floor. The height of the tallest model was 4'-8 1/2" so that one fan was about level with the top of the shield and one fan was above it. Each model was curved differently and it was found that the manner of curving did not particularly matter. The most effective model, however, was that shown as Type A, which is similar to a shield used by the U. S. Navy. As can be seen, this effectiveness is due to the curve of the main shield permitting a maximum entrance of wind.

Type B was found to be fairly effective, but does not direct the wind as high as Type A. It is shown because of its adaptability to existing bridges. From the results of the test, it appears that the two most important requirements are that the tops of the main shield and deflector be at the same height and that the lower opening be more than twice the width of the upper opening.

Models were tested first in a small room having a ceiling drop behind the shield. It was found that this obstruction set up wind currents which rendered the shield ineffective. The model was then tested, with success, in a large room with the entire ceiling of the same height. From this it appears that the wings of the bridge would be the suitable places to erect the shield. A shield erected directly in front of a pilot house would probably be unsuccessful. Awnings and overhead decks will undoubtedly give trouble unless their forward edges are sufficiently aft of the wind-shield so as to permit a free flow of wind upward.

The material used should be sheet metal, and spreaders should be welded on the main shield at suitable intervals to support the deflector.

BRIDGE WINDSHIELDS.

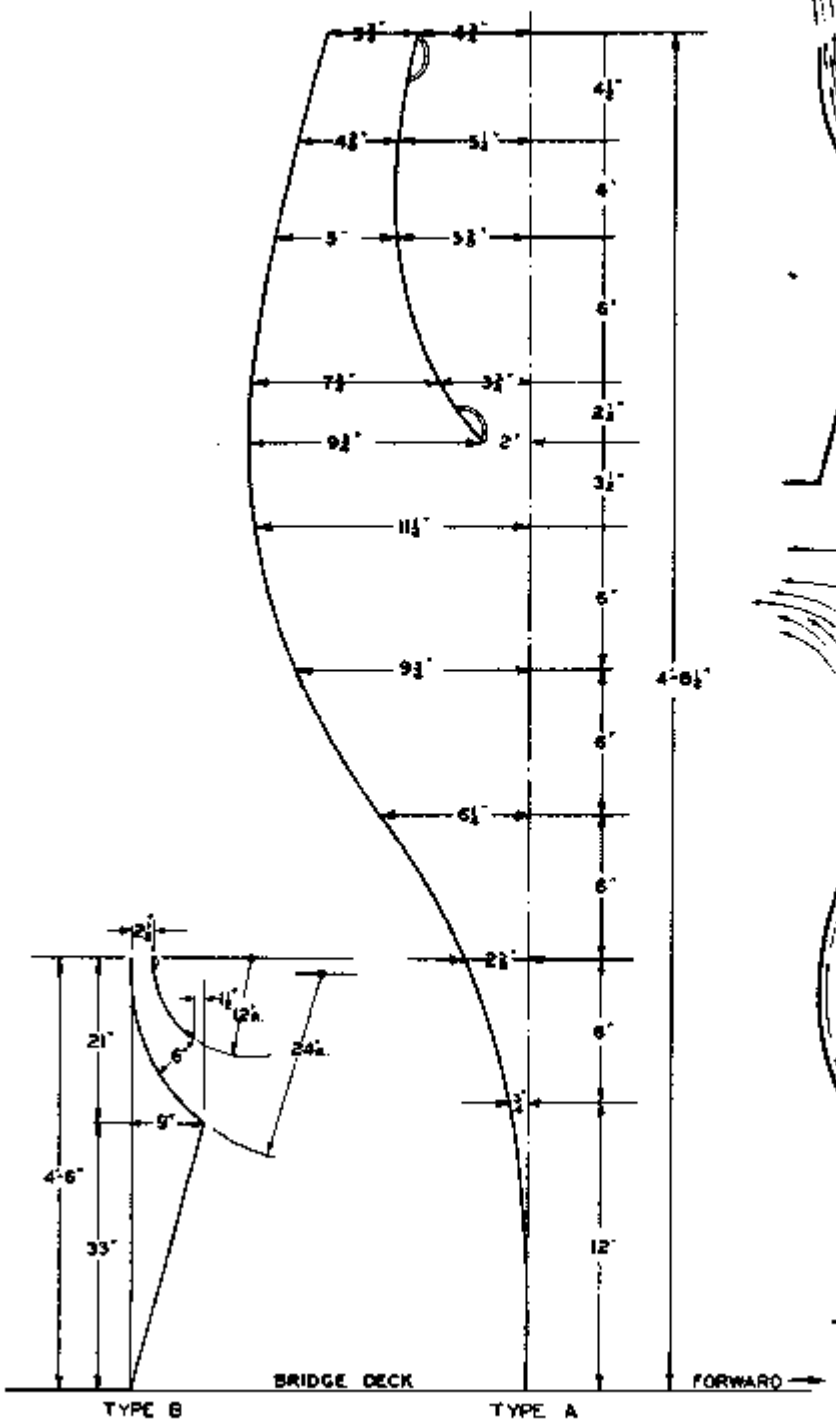

TYPICAL SECTIONS

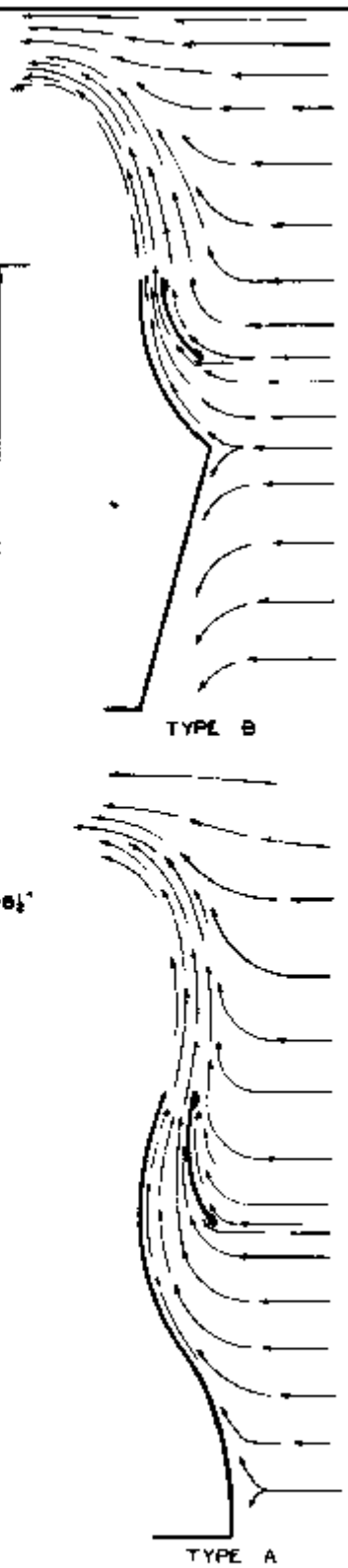

WIND EFFECT DIAGRAMS

1937

MAGNETIC OBSERVATIONS AT SEA

Paul Taylor, Aid
U. S. Coast and Geodetic Survey

Recent tests made by the party on the Coast and Geodetic Survey Ship HYDROGRAPHER to determine the practicability of observing magnetic declination at sea from one of the ship's whaleboats have proved successful. Four sets of observations, made at locations from 70 to 100 miles offshore in the Gulf of Mexico, between longitudes 92° 35' and 94° 18' West, indicate that a simple and practical method of making such observations from a non-magnetic small boat has been developed. The method is by no means perfect as yet, but it is one that will give satisfactory results under favorable weather conditions, and one which causes practically no delay to the hydrographic work of the surveying ship.

One of the ship's standard non-magnetic whaleboats, equipped with a special spherical-type compass, furnished by the Washington office, was used in the tests. This special compass was mounted on a stand in the center of the whaleboat. The spherical-type compass differs from a standard magnetic compass in the following details:

> The glass top is hemi-spherical which magnifies the card and thus permits of somewhat greater accuracy in readings (without the necessity of resorting to hand magnifiers sometimes used on standard compasses).
>
> The top of the float is equipped with a shadow-pin of sufficient height to permit of taking a magnetic bearing of the sun directly, without the use of an azimuth circle, provided the sun's altitude is not too great.
>
> It is equipped with four small vertical rods at the cardinal points which serve as lubber lines.
>
> The spherical chamber is supposed to reduce the dynamic deviations of the card caused by the roll and pitch of the vessel.
>
> The compass is provided with a special azimuth circle equipped with a cylindrical concave mirror, one vertical sight vane, and a horizontal sight vane to reduce the parallax in the readings of the card.

To reduce the effect of wave action on the observations, four canvas sea anchors, each 36 inches in diameter, were swung from wooden outriggers 4" x 4" x 16', as shown on the accompanying sketch. The sea anchors were suspended about 8 fathoms below the surface of the water in order to avoid surface motion. A sixteen pound sounding lead was suspended from the bottom of each sea anchor to insure that the supporting lines would be taut at all times. The original galvanized rings in the sea anchors were replaced with brass rings making them non-magnetic. The use of sea anchors as a means of minimizing rolling motion, was tried with success two years ago on the Launch FARIS while that launch was serving as a radio-acoustic ranging station,

The complement of the whaleboat consisted of four men; one of whom served as timekeeper, one as recorder, and the two others alternated at the steering oar. After placing the sea anchors the method of making the observations was as follows: The man at the steering oar, standing so that he could see the compass, swung the boat around and steadied it on the desired heading. Four azimuths of the sun were then taken, noting the time of each observation. The boat was then swung to the right in the usual manner, steadying on twenty-four headings, four observations being

made on each heading; the process was repeated swinging the boat with left rudder. The azimuths were read to tenths of a degree and the mean value of the four observations on each heading was used in the computations. The magnetic declination was computed from the mean compass error from the right and left swings.

A complete set of observations usually took about two hours from the time the boat was lowered. The procedure was for the HYDROGRAPHER to stop on a sounding line, drop the magnetic party, and then pick it up again on a return line, with very little delay. Of the four sets of observations, three were taken in a calm sea and one was taken when there was a force 3 wind and a light choppy sea. From experience gained in observing and from the results obtained it is believed that good results can be obtained with the present method only when the sea is comparatively calm. The accuracy of the results could no doubt be increased, when observing on days not perfectly smooth, by taking six or possibly eight, instead of four, observations on each heading. This would not increase the time of a complete set by more than thirty minutes.

Iron oarlocks and any other magnetic material that can be conveniently removed from the boat should be replaced by bronze in order to reduce the magnetic effect of the boat as much as possible. Since the accuracy of the observations on different headings will vary because of the varying effects of the sea, it is important that the boat be made as nearly non-magnetic as possible, in order that the mean of all the compass errors will be closer to the true magnetic declination.

A disadvantage of the method when carried out in conjunction with hydrographic surveying is that no exact time or place can be designated in advance of an observation, and boat and equipment must be kept ready for use on short notice when and where the weather permits.

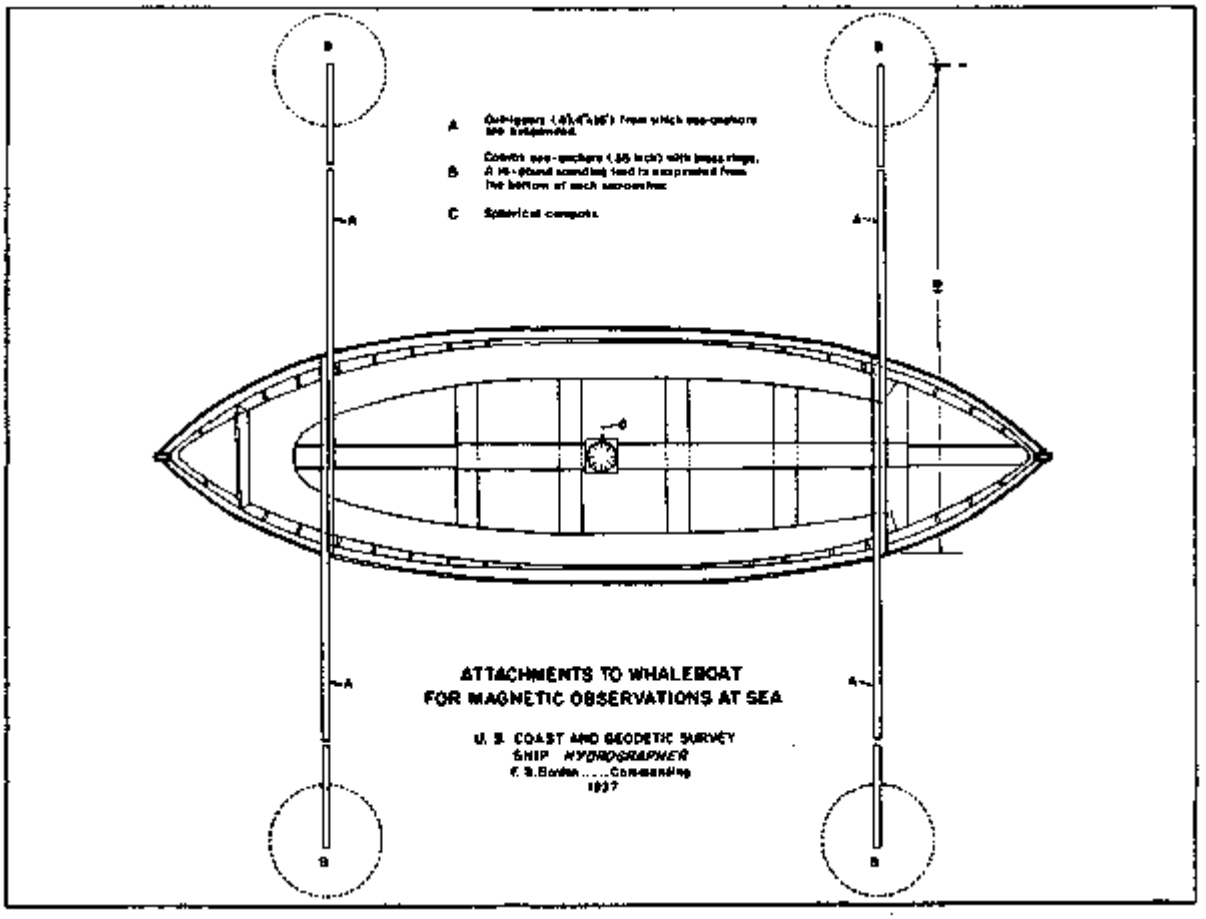

GEOGRAPHIC NAMES OF INTEREST

A few geographic names which perpetuate the names of ships of the Coast and Geodetic Survey have been selected as being of special interest to the personnel of this Bureau. These names with the circumstances of their adoption are given below:

BIBB ROCK

Maine

A rock awash located about 7/8 mile offshore and 8 nautical miles southwest of Cape Porpoise, Maine.

Named in 1859 after the U. S. Coast Survey Steamer BIBB which was surveying in the vicinity at that time.

The Steamer BIBB was transferred to the Coast Survey from the Revenue Cutter Service on July 15, 1847, and was the first steam vessel used by the Coast Survey in hydrographic surveying. The BIBB was discontinued from service in 1873.

CORWIN ROCK

Maine

A twenty-one foot shoal about two miles east of Cape Elizabeth, in Casco Bay, Maine.

Named after the U. S. Coast Survey Steamer CORWIN.

This rock was discovered on July 23, 1863, by Lieutenant Commander Thomas S. Phelps, Assistant in the Coast Survey, commanding the Steamer CORWIN while engaged on hydrographic surveys in the vicinity.

The Steamer CORWIN was built in 1851, especially for duty on the West Coast, but in her stead the Steamer JEFFERSON was sent and during that voyage was wrecked on the east coast of Patagonia. The CORWIN was never sent to the West Coast.

DISCOVERER BAY *

Alaska

The central arm of Perenosa Bay on the north shore of Afognak Island, which is adjacent to Kodiak Island, Alaska.

Named in 1932 after the U. S. Coast and Geodetic Survey Ship DISCOVERER.

The first surveys of this area by the Coast and Geodetic Survey were made in 1932 by the party on the Ship DISCOVERER in command of Lieutenant Commander H. B. Campbell, U.S.C. & G.S. The DISCOVERER was a mine-sweeper built in 1918 for the Navy Department and transferred to the Coast and Geodetic Survey in 1922. Late in 1922 she was transferred to the west coast of the United States, and has since been engaged on surveys there and in Alaska.

"Discoverer Island", a small island in Discoverer Bay is also named after the Ship DISCOVERER.

EWING ISLAND

Washington

The northeast island of the Sucia Islands in Georgia Strait, Washing--n.

Named in 1858 after the U. S. Coast Survey Schooner EWING.

The Schooner EWING was received by transfer from the U. S. Revenue Cutter Service in 1848 and sailed soon thereafter for San Francisco via the Strait of Magellan.

She arrived in San Francisco in 1849 and was the first survey vessel used by the Coast Survey on the west coast of the United States. The EWING, after successive seasons of survey work was discontinued from service in 1858.

* Decision of the U. S. Geographic Board.

EXPLORER BASIN *

Alaska

A basin on the west coast of Kuiu Island, and on the south side of Tebenkof Bay, 26 miles north of Cape Decision, S. E. Alaska.

Named in 1926 after the U. S. Coast and Geodetic Survey Ship EXPLORER.

The EXPLORER was built in 1904 at Wilmington, Delaware, for the Coast and Geodetic Survey. After several years of surveying on the Atlantic Coast the EXPLORER was transferred to the Pacific Coast in 1908 and continued surveys there and in Alaska until 1917 when she was transferred to the Navy Department for service in the war. In 1919 the EXPLORER was returned to the Coast and Geodetic Survey and has since been used for surveys in Washington and in Southeast Alaska.

GALLATIN ROCK

Massachusetts

A rock with a least depth of 10 feet in the entrance to Mattapoisett Harbor, Buzzards Bay, Massachusetts.

Named after the U. S. Coast Survey Schooner GALLATIN.

This rock previously unknown, was discovered and located in 1845 by the survey party on the Schooner GALLATIN during the hydrographic survey of Buzzards Bay. It was later named after the Schooner.

GEDNEY HARBOR

Alaska

A harbor on the west coast of Kuiu Island, 5 miles south of the entrance to Tebenkof Bay and 23 miles north of Cape Decision, S.E. Alaska.

Named in 1899 after the U. S. Coast and Geodetic Survey Steamer GEDNEY.

The Steamer GEDNEY was built in 1876 for the Coast and Geodetic Survey and continued in service until 1915 when she was sold. She was used for surveys on the Atlantic Coast until 1888, and was then transferred to the Pacific Coast where she was used for surveys of the Pacific Coast and Alaska until 1915.

HETZEL SHOAL

Florida

A shoal area with a least depth of 12 feet, about 11-1/2 miles northeast of Cape Canaveral, Florida.

Named after the U. S. Coast Survey Steamer HETZEL.

The shoal was first discovered, located and surveyed in 1850 by a hydrographic survey party in the Steamer HETZEL during a reconnaissance survey of this area. During this survey of Cape Canaveral and vicinity one of the anchor chains of the HETZEL parted in a storm and she was driven ashore, where she remained for 19 days before Lieutenant Commanding John Rodgers, U.S.N., Assistant in the Coast Survey, and her crew got her off.

LEGARE ANCHORAGE

Florida

A partially protected anchorage, just west of Triumph Reef, near Biscayne Bay, Florida.

Named after the U. S. Coast Survey Steamer "LEGARE".

In 1852 Lieutenant John Rodgers, U.S.N., Assistant in the Coast Survey, commanding the Steamer "LEGARE", surveyed this anchorage, which he called a harbor of refuge. In his letter of May 28, 1852 to the Superintendent he reports the results of his survey and mentions the harbor "which I venture to call after the Steamer."

* Decision of the U. S. Geographic Board.

McARTHUR PASS *

Alaska

A narrow passage between the Pye Islands and the mainland, on the south side of Kenai Peninsula, Alaska.

Named in 1906 after the U. S. Coast and Geodetic Survey Ship McARTHUR.

During a reconnaissance survey of this region, the Steamer McARTHUR, H. W. Rhodes, Assistant, Commanding, navigated this narrow passage on September 6, 1906, and it was named "McArthur Passage (or Pass)" by him at that time.

The Steamer McArthur was built at the Mare Island Navy Yard in 1876 for the Coast and Geodetic Survey and was continually engaged in surveys on the Pacific Coast and in Alaska until she was sold in 1916.

McArthur Cove, nearby, takes its name from McArthur Pass.

MT. LYDONIA *

Alaska

The highest and most prominent peak (elev. 3215 ft.) of the mountains that border Portlock Harbor on the west coast of Chichagof Islands, Alaska.

Named, in 1920, after the U. S. Coast and Geodetic Survey Ship LYDONIA.

The Ship LYDONIA, E. H. Pagenhart, commanding, anchored off the slope of this mountain in July, 1920 while on an inspection trip with E. Lester Jones, Director of the Coast and Geodetic Survey aboard. The mountain has been known as Mt. Lydonia ever since.

The LYDONIA was received by transfer from the Navy Department in 1919, and proceeded to the Pacific Coast and Alaska, where she was used for surveys until 1922. In 1922 the LYDONIA was transferred to the Atlantic Coast of the United States where she still continues in service.

"Pt. Lydonia" and "Lydonia Island" in the near vicinity are also named for the Ship LYDONIA.

SURVEYOR PASSAGE *

Alaska

A narrow navigable passage, 8 miles north of Khaz Bay and connecting Portlock Harbor with Ogden Passage.

Named in 1925 after the U. S. Coast and Geodetic Survey Ship SURVEYOR.

The first surveys of that locality were completed by the party of the Ship SURVEYOR in 1925 and the name was recommended by the field party because "The SURVEYOR was the first fair sized vessel to use this passage".

The SURVEYOR was built for the Coast and Geodetic Survey at Manitowoc, Wisconsin, in 1916. Shortly after being commissioned she was transferred to the Navy Department for service during the war. In 1919 the SURVEYOR was returned to the Coast and Geodetic Survey and proceeded to the Pacific Coast, where she has been used since in surveying Alaska.

WILDCAT PASS *

Alaska

A navigable pass between Ragged Island and Rabbit Island in the Pye Islands of the south coast of Kenai Peninsula, Alaska.

Named in 1927 after the U.S. Coast and Geodetic Survey Launch WILDCAT.

The survey party aboard the WILDCAT made a survey of this area in 1927 while working in connection with the Coast and Geodetic Survey Ship SURVEYOR, R. R. Lukens, commanding. The name was recommended by the field party.

The Launch WILDCAT was built in 1915 and transferred from the Navy Department to the Coast and Geodetic Survey in 1919, and has since been continuously engaged on surveys in Alaska as a tender with a larger vessel.

"Wildcat Cove", in the near vicinity, is also named for the Launch WILDCAT.

* Decision of the U. S. Geographic Board.

SONO-RADIO BUOY DEVELOPED ON SHIP GUIDE 1936

Almon M. Vincent
Senior Chief Radio Operator
U. S. Coast and Geodetic Survey

Foreword by Commanding Officer of Ship GUIDE:

The area to be surveyed by radio acoustic ranging methods west of Cape Mendocino presents many difficulties in the selection of suitable RAR stations. The entire coast is exposed to the prevailing heavy northwest swell during the summer months. Days when cable can be laid are extremely few. The extensive shoals off the Cape, the difference in azimuth of the shore line north and south of the Cape, and several characteristic deep, steep, submarine canyons which extend almost to the high water line, make it impossible to select any one station at which the sound from large sections of the area to be surveyed would not be prevented from reaching the hydrophone.

To obtain three good intersections in all parts of the area to be surveyed, using an appropriate scale on which this survey should be made, would necessitate the establishment of many shore stations with the resulting delays and excessive oosts for cable and labor.

Solutions of this difficulty would be to reduce materially the scale of the survey, establishing stations at excessive distances; or to establish RAR buoys in the comparatively shoal water west of Blunts Reef.

As a result of the desirability of developing such a buoy Senior Chief Wireless Operator Almon M. Vincent, assisted by Wireless Operator Edward E. Combs, assembled from surplus equipment the buoy described in this article. Many suggestions, especially regarding rigging and anchoring the buoy, were made by Lieutenant Commander Schoppe.

F. H. Hardy, Commanding Ship GUIDE.

The original installation consisted of standard shore station equipment. No changes were made other than substituting tubes which use lower filament and plate currents, thereby reducing current drain. This installation worked as well in the buoy as ashore; however, the filament and plate currents were still exceptionally high, (filament 500 milliamperes) which would have made it necessary to use two barrels to float the required number of batteries for a normal season's work. Rather than use the second barrel and increase the bulk it was decided to concentrate on increasing the efficiency of the apparatus without in any way reducing the sensitivity. The balance of the season was used in this development in conjunction with testing several keying methods. By reducing the size of the unit, a more compact installation would be available for testing purposes. This improvement in economy took a longer time than was expected and left very little time to make actual service tests.

The present installation consumes .81 watts filament power compared to the original 1.50 watts. The no-signal plate current of the entire set is less than 2 milliamperes. The reduction of filament current was obtained by substituting two 60-milliampere tubes for the 120-milliampere type, and by connecting the filaments in series. This eliminated the 25 percent loss that would occur in a reducing resistance or ballast tube.

By using heavy duty, layer-built "B" batteries and small size dry cells, the battery life of the station is at least 90 days with one layer of batteries. Two layers of batteries may be placed in the same barrel

and leave enough free-board for satisfactory operation. The barrel is constructed so that it may be pulled twelve inches under water during heavy weather without grounding the antenna. Beyond that depth, it would cut off only during the instant that the wave actually grounded the antenna, which, of course, would happen in any installation.

The filament batteries used are the small type dry cell. They may be purchased in banks connected together for convenience in installation. This set is wired for the 4-1/2 volt, in preference to the 6 or 7-1/2 volt combination, because it more nearly matches the tubes.

The barrel used is the standard 55 gallon size, gage 12, chrome-steel, bilge type. The bilge construction strengthens the barrel sufficiently to make external ribs or bracing unnecessary and contributes to reduced water and wind resistance. The barrel has a removable head which requires the loosening of only one bolt to remove the cover completely. When the cover is in place, the barrel is sealed airtight. No changes were made to it other than inserting a rubber gasket between the head and the barrel. A small hole was cut in the cover to provide a hand-hole for minor adjustments to the instruments prior to launching. A standard 110-volt, water-tight fitting accommodates the No. 18 duplex, rubber covered cable which connects the antenna to the set. A similar fitting is installed on the bottom for the hydrophone cable.

The antenna and counterbalance brackets are detachable and are welded into form from parts on hand. The bracket stock is 1-1/4 by 1/4 inch strap-iron. The bottom structure is welded to a 2-1/2 inch steel pipe flange so that the pipe used for a counterbalance support may be removed when handling on shipboard. This feature also permits different lengths of pipes to be used until a proper balance is obtained. A flat 3/8 inch steel plate is used for the antenna insulator support. Additional connections between the two structures were not necessary because of the ample strength of the barrel.

The main antenna insulator is a bakelite tube three inches outside diameter with a 1/2 inch wall, threaded on both ends to take a standard pipe flange. Two flanges were not available at the time of construction so a pipe cap was used on the top. A tapered flange cap has been machined to replace the pipe cap on top since the original construction. A tapered flange on top may give better insulation during heavy weather. Shoulders were cut along the sides of the bakelite to increase the leakage distance, but the advantage obtained is probably only ornamental. The bakelite used has a tensile strength of 11,000 pounds per square inch. It was added only after several porcelain and pyrex insulators were broken during handling on the ship. The bakelite insulator makes it possible to put more than adequate downpull on the antenna without any danger of cracking it. The antenna-loading and link-coupling coils are placed inside of the insulator and completely sealed, except for a small threaded opening which is closed after the required tuning is accomplished. The coil is well loaded and the antenna is connected directly to one end of the tuned circuit, causing it to have rather broad tuning. A three-inch loop, connected to a rectifier-type voltmeter is used, as an indicator, to tune it before the buoy leaves the ship. It is then sealed and no further adjustments are required. Lieutenant Commander R. L. Schoppe suggested that a low voltage antenna feed be adopted so that ordinary 110-volt insulation could be used because of the possibility of a high voltage porcelain or pyrex glass lead-in insulator breaking during a storm or through collision with floating driftwood, which accident would result in filling the barrel with water. This naturally suggested a single wire, current-fed lead, or a link coupling. The latter was selected because of its simplicity.

In designing the antenna, it was thought advisable to begin with the all-metal construction, not only because of simplicity, but also to avoid any possibility of detuning caused by the changing characteristics of nearby wood which might absorb moisture or accumulate salt. Such

Counterweight showing method of attachment to barrel.

Buoy afloat.

Amplifier and transmitter in case.

Senior Operator Vincent tuning antenna tank to resonance. Note screwdriver inserted in bottom of insulator. This hole is capped after tuning is complete.

construction eliminates the possibility of dissipation of output energy into the wood adjacent to the antenna. It consists of a ten-foot length of airplane, chrome-molybdenum, 18 gage, steel tubing with an outside diameter of one and one-half inches with a pipe collar on top to lengthen it for purposes other than radio. The point was to make everything subject to quick changes, including the electrical circuits. The ratio of strength to weight of the chrome-molybdenum tubing is about the same as duraluminum, which was previously used, or about the same strength as a pine "two-by-four". We found that a two-inch tubing of the same material, but of 16 gage and galvanized, would be better suited for the installation. The antenna tube would then have four times the present strength, making it possible to hoist the entire unit, including batteries, from the tip of the antenna should this be necessary during heavy weather. It is also strong enough to hold a standard signal banner.

The three antenna guys are made from wire-drag, stainless-steel cable, 7 x 7 (49 strand), 3/l6-inch diameter. They are broken up with three insulators on top and two on the bottom of each guy. The insulators are of the guy type, differing from the strain type in that should they break, the guy would not become disconnected. The top insulators are standard airplane type tested to withstand a 3000-pound strain; the bottom the 4500-pound type. Only one set of guys was used on the final installation because of the increased rigidity obtained with the chrome-steel mast. Provision was made, however, for three more guys should they be required. Galvanized steel 1/4-inch turnbuckles are used to tighten the guys individually. One-half inch turnbuckles will be substituted for the latter in the next installation. We believe this type of antenna was a major factor in the perfect recording of signals at 140 miles with less than 2 watts of antenna input. With the buoy in the water the effective capacity of the antenna is roughly .00004 microfarads.

The anchor is a concrete block 300 to 400 pounds in weight. This is shackled to 100 feet of ordinary boat chain and the chain secured to a manila rope three inches in circumference which leads to the barrel. The rope is made fast to one of the brackets of the lower counterbalance structure. The length of the rope depends on the depth of the water, but it should be short enough so that it will never touch bottom under any condition. Although the rope showed no indications of wear during the time it was in service, the manila rope will be replaced by flexible steel cable for increased security during heavy weather. The magnetophone is made fast to the anchor line midway between surface and bottom. This method keeps the magnetophone farther away from surface noises and reduces the swinging. It is, of course, possible to vary the depth at different localities. A rubber takeup with a twelve-inch give was inserted in the line between the magnetophone and the chain. Its advantage probably is only theoretical. The rubber shock absorber probably will reduce the wear and tear on any kind of anchor gear used, although the complete unit balanced and rode a force-seven gale very nicely before the shock cord was added. Considerable noise was picked up during the storm, but we believe it was caused mostly by several steel sounding shots which were tied together for an anchor. They were loose with reference to one another and laid on rock bottom. We are not certain whether the one-piece anchor remedied the noise or not, although there was absolutely no noise when it was substituted for the sounding shots; however, when the one-piece anchor was used, the sea was moderate.

The electrical equipment in the barrel needs little explanation. It is essentially a compact shore station slightly rearranged so that it will fit the buoy more conveniently. A few minor changes were made for economy of battery energy only, which naturally calls for dry cell tubes throughout. The types of tubes and method of connection are immaterial as long as the amplifier produces the desired gain and the transmitter produces sufficient output with maximum efficiency. Three installations which were tried produced about the same output. Although the available sensitivity is identical to a shore station it does not necessarily follow that the

range will be the same, as it is unlikely that the volume control of an unattended station could be set much higher than thirty or forty percent of that of an attended shore station. Even with variable amplitude output, it is limited to not much over 60 percent because of the possibility of one noisy station putting the other two or three completely out of commission. One is immediately confronted by this limitation when there is no operator to reduce the sensitivity during heavy weather or other local disturbances, such as distant passing ships, water noises and partial fouling of the anchor gear, all of which create noise of insufficient time duration to actuate the automatic cut-off or thermostat. The heavy noise caused by ships that pass close-by, and by extreme fouling of anchor line are automatically eliminated by a thermostat in the plate-voltage supply. The thermostat cuts the set completely off, (thermostat adjusted to actuate after about one second of heavy noise), and puts the station off the air for any length of time for which it is previously adjusted. This permits operation of the other stations until repairs are made to the offending station. Any simple thermostat or time-delay relay is satisfactory as long as it can be adjusted for the required time, for it in no way effects the accuracy of the rest of the equipment.

The first change made to increase the efficiency of the apparatus, as previously mentioned, was the wiring of the filaments in series-parallel, instead of in parallel; thereby, increasing the battery life more than 30 percent, as the life of a dry battery varies with load. The buoy described accommodates a filament battery supply which is basically a bank of 48 dry cells of one and one-half volts per cell, (16 units in parallel connection with each unit consisting of 3 cells in series). They may be purchased as single cells, or in blocks consisting of various combinations of cells, connected in series or parallel, for convenience in installation. The buoy set was designed for filament supply from a four and one-half volt battery because of increased tube life and greater efficiency from the dry cell type batteries. The above bank connected to this set results in a current consumption of less than twelve milliamperes per dry cell and gives an operating life of 4,000 hours with continuous operation. This data is obtained from the manufacturers' discharge curves and has never been definitely tested.

In wiring the tubes in series-parallel, it is very important that tubes drawing approximately the same plate currents be placed in pairs across the battery, especially the 60-milliampere type; otherwise, the change in resistance caused by the heavy plate current will unbalance the filament voltage on the two tubes. The only tube that draws enough plate current to unbalance the filament voltage in this set is the radio frequency output tube. This precaution is less important with the heavier 1F4 type filament.

A second economy that may be mentioned was obtained by using impedance or transformer coupling between the screen grid tubes. This makes the full load voltage at the tubes almost the same as the no load voltage, and multiplies the voltage more than 120 times plus any voltage step-up of the transformers, instead of 50 times when resistance coupled in the first stage. This method gives enough voltage to work a series connected gaseous rectifier or thyraton directly from the first tube. The second tube, however, is advisable for additional amplification. It is also necessary in order to supply sufficient voltage to drive either the 0Z rectifier or the push-pull amplifier for power operation. The latter was found unnecessary for these small transmitters and has since been eliminated.

The intermediate audio transformers adopted in the present installation were obtained commercially, (Gardiner 7071). They have been substituted for the two previously used in series in the original circuit. They have sufficient core so that the small direct current will not appreciably lower their inductances; thereby, making the shunt impedance unnecessary.

The transformers have primary inductances of 600 henrys at 1/2 milliampere and a 1 to 2 ratio. They also may be obtained with a 1 to 5 ratio if more amplification is desired. The secondary, of course, takes the place of the grid impedance previously used. We feel that impedance should be used on both the plate and grid circuits of RAR amplifiers regardless of whether they are transformers or chokes because of their lower dc resistances compared to resistance coupled amplifiers. The high plate resistance of the latter type of amplifier results in a poor gain, and a high resistance in the grid circuit may cause the tube to block on a strong bomb and take considerable time to recover. Should there be the least amount of gas in the tube, it may never recover.

A high mu tetrode tube coupling into a transformer is not used commercially where fidelity is required because of the voltage peaks at different frequencies which develop in a lightly loaded primary and open secondary. They could be flattened by shunting a resistance across either winding, but this reduces the gain. The peaks in this instance are used to an advantage by moving them both to the lower end of the audio frequency range so they will be in the range of frequencies in which the bomb yields the greatest amount of energy. The two peaks were placed close together purposely so as to broaden the tuning, as a sharply tuned amplifier has never proven very satisfactory for this work. This probably is because the strongest bomb noises are in the frequency range of the water noises. A tuned amplifier in that range would pick up numerous noises from the water regardless of the selectivity of the amplifier. The tuned amplifier must also be rather broad as too sharp a tuning causes tail effects; that is, the continuation of sound longer than the original. This would not be so objectionable if the constant rumble were not present at the frequency caused by water noises.

Both mechanical and electrical tuning have been used from time to time at different frequencies and sharpness within supposed frequency range of the bombs. This resulted in only a moderate improvement, insufficient to warrant a complete change. Incidentally, the original bomb amplifier of 1923 was peaked unintentionally at 300-cycles. However, there is a strong possibility of the bomb now in use having a very low or extremely high frequency beyond the range that the oscillograph amplifier passed in recent experiments conducted.* If this hypothesis is true, then a sharply tuned amplifier would be desirable as it would be out of the water noise range. Incidentally the buoy installation, like the shore station amplifier, peaked rather broadly on the lower audio frequencies. As physical characteristics of TNT bombs, (5 foot pipes, etc.), have little effect on their frequencies, data on various explosives have been obtained with the idea of finding an explosive producing a frequency which would be out of the water noise range. If such an explosive were available the quantity per bomb could be reduced as the amplification of the set could then be increased considerably without detrimental effects of water noises. The data on the various types of explosives and their characteristics are submitted with this report.

The following is quoted from personal correspondence from the E. I. DuPont de Nemours & Company:

> "We have no figures on Trauzl block tests, but reasoning by analogy, the picric acid, tetryl, T.N.X. and "Nitramon" are approximately correct. Potassium chlorate can not be exploded by itself and can not be determined either by lead block or velocity. Cordeau can not be exploded by pounding or hammering; its lead block test would be the same as TNT, and its velocity of detonation is 17,500 feet per second.

* Swainson, 0. W. "Velocity and Ray Paths of Sound in Sea Water." U.S.C. & G.S. Field Engineers Bulletin No. 10, page 1, December 1936.

"We have made no experiments on the frequency of the sound waves under water of different explosives and can give you very little information.

"We have been told that TNT in a spherical glass container has detonated when dropped on the steel deck of a vessel. Therefore we recommend a bomb somewhat as per the attached photostat for this purpose, of whatever length is desired to hold the TNT and to be fired electrically. A fairly water tight joint could probably be made, to be fired with fuse and cap, by the use of a smooth surface fuse like Triple Tape or Dreadnaught.

"The stronger the container, the more complete and quicker the explosion. TNT is rendered insensitive when wet.

"If Blasting Gelatin or TNT is used in the iron container illustrated, it should be wrapped in oiled paper in order to be sure that none of it is pinched in the threads of the upper cap."

The following table has been compiled from information obtained from the Naval Inst. Proc. December 1924 and January 1932, and from the E. I. DuPont de Nemours & Company:

Explosive	Falling inches to explode (cubic ft. dropped on concrete)	Expansion of lead block (40% dynamite Eq. 100%)	Speed of Explosive Foot per second
Mercury, Fulminate	3*(ounces)	70	7000
Mercury, Fulminate (wet)	60 (ounces)	20	6000
Potassium Chlorate	Cannot be exploded at any distance	Cannot be measured by this method	
Gun Cotton, Dry	14		4730
Black Powder	75	10	5000
Picric Acid	84	106	15000
Tetryl	80	115	23000
TNT, Grade A	84	106	13000
TNT, Grade B	Variable	105	18000 Variable
TNX	108	106	20000
Nitramon	Cannot be exploded	120	15000
Dynamite (Gel.) 100%	60	400	11000
Dynamite (Gel.) 40%	60	75	10000
Dynamite (Amm.) 40%	50	75	10000
Dynamite (Str.) 40%	50	100	9000
Cordite	70	85	11000
Cordeau	Cannot be exploded at any distance		17500

Gelatin dynamite is the only explosive that does not diminish in strength or fail to explode when wet.

*Fulminate of Mercury is a comparatively weak explosive but very sensitive to shock. The advantage of it over other explosives as a detonator is not in its strength but of its broad wave length analogous to a spark transmitter. The broad "untuned" wave will shock excite other explosives with considerably less power than would otherwise be required.

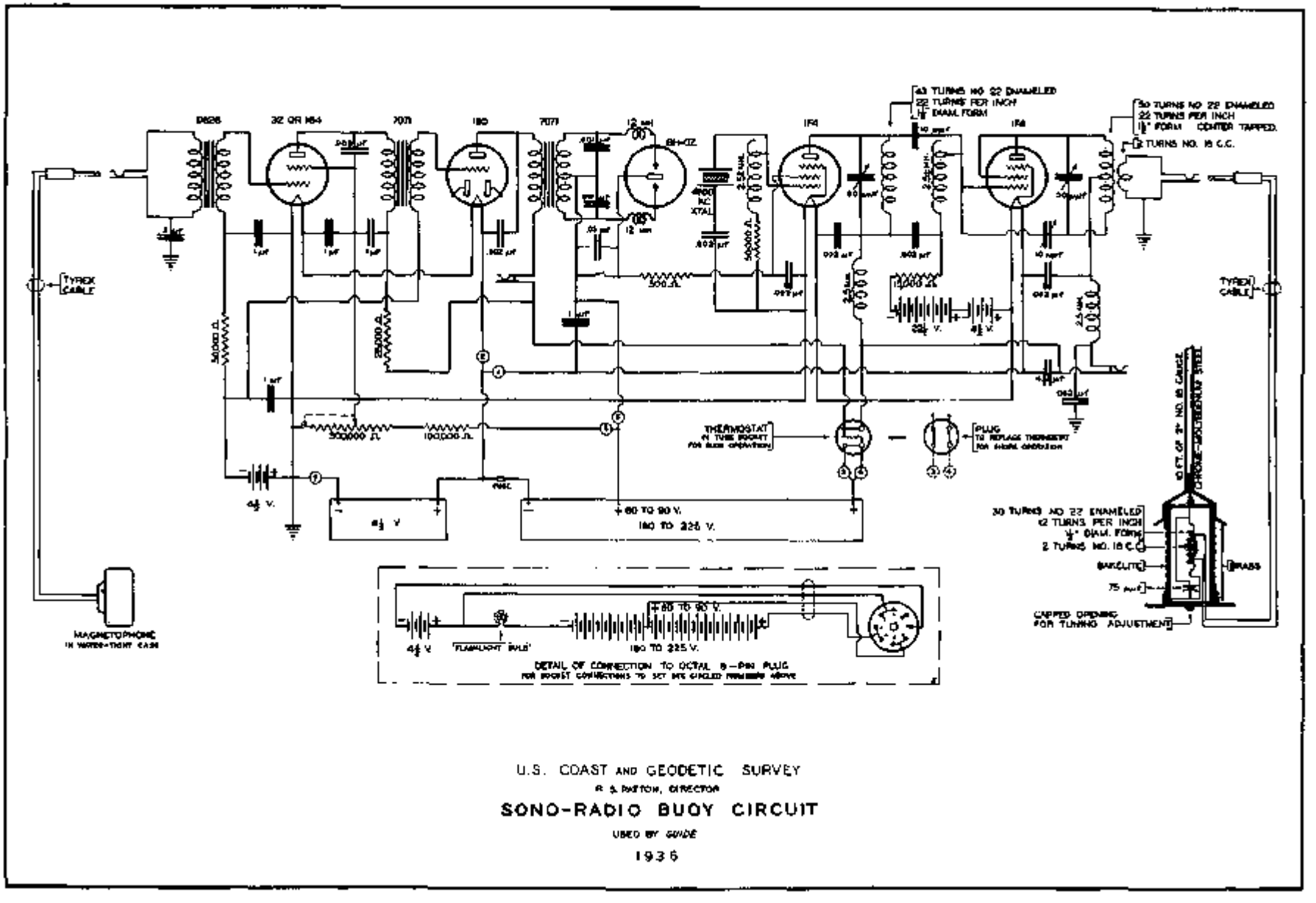

U.S. COAST AND GEODETIC SURVEY

R. S. PATTON, DIRECTOR

SONO-RADIO BUOY CIRCUIT

USED BY *GUIDE*

1936

No further investigations of either bombs or tuned amplifiers were made by this vessel since that time. The above is reviewed only for the purpose of showing why sharp tuning is avoided at present. The foregoing discussion on bomb frequencies, of course, is a personal viewpoint and does not necessarily reflect the views of others.

Three methods of actuating the transmitter were tested; namely, a method producing a variable partially filtered output without carrier, a gaseous tube causing abrupt starting of the oscillator, and a mechanical relay. All tests were made on the same transmitter with various tube combinations.

The variable output method is similar to the arrangement used in 1926 when the station was run two days automatically without an operator for an official report. It consisted of nothing more than a minature broadcasting station, grid modulated by a speech amplifier. The frequency of the transmitter was 800 kc , controlled by broadcast crystal, (Type A-3 being permitted then on any frequency). It was discontinued after the tests because of the enormous amount of power consumed by the 50 watt tubes which required a motor-generator to furnish the plate supply. It was extremely broad because of the audio frequency superimposed on the variable amplitudes. It also emitted a small carrier between the no-signal periods. The present circuit is similar but the output is Type A-1, and the carrier is removed between signals. Since the crystal is operating continuously no lag is encountered in starting the crystal at each character. This simple direct coupled method of transmitting a bomb signal seems to be the most practical for buoy installation from a lag point of view. However, because this keying method did not have sufficient field tests under actual operating conditions and because of the possibility that it would require further change to increase its efficiency, it was thought advisable to submit only the drawing and description as it is connected, and adjusted for constant amplitude keying, as the circuit has had sufficient trial in the buoy to prove its reliability for that type of service.

The enclosed circuit diagram shows the complete installtion as used during the 1936 season, with the exception of the transformer change in the audio frequency amplifier as previously mentioned. This change made the sensitivity of the amplifier unnecessarily high, and was reduced by substituting a triode tube, (1B5), of lower amplification. This still leaves a surplus of amplification which may be necessary for weak magnetophones. This amplifier has a voltage gain of about 20,000 times, (at 120 cycles), multiplied by the ratio of the input and output transformers, which in turn is controlled by the impedance of the magnetophone, (usually 8 or 500 ohms at 400 cycles). Amplification, however, is no problem as it may be increased several hundred percent simply by adding a tube.

This amplifier is connected to a gaseous tube, (BH), which passes no current until the voltage reaches sufficient potential to ionize the gas. When this occurs, an instantaneous rectified voltage is developed across the output, which in turn actuates the grid of the transmitting tube, causing a radio signal to be emitted. Since the breakdown voltage of the gaseous tube is constant, a definite minimum voltage is developed across its output. This minimum is influenced mainly by the regulation of the audio frequency tube and transformer which excite it. This voltage should be several times that necessary to start the crystal oscillator, which in this installation is between one and five volts. This makes the crystal oscillator start instantaneously or not at all. The same type of tube is used to actuate the recording pen of the chronograph on shipboard, reducing the variable action from different signal strengths. A power tube (20 watts) and transformer of good regulation are used in conjunction with the tube, resulting in a minimum output breakdown voltage of over 100.

It will be noted that the gaseous tube is always connected in shunt to the transformer, instead of the more sensitive series method. This is

done to utilize the full extent of the ratio of ionization voltage to voltage drop after it becomes ionized. This results in a higher instantaneous voltage output, but does require more pre-amplification (40 decibels). A radio frequency choke (12 mh.) is used in series with each plate to reduce shock excitation caused by the abrupt current increase when the tube ionizes. This sometimes causes feedback. These gaseous rectifier tubes sometimes pass current in the reverse direction causing partial ionization. This varies with individual tubes of the same type. Although this ionization is insufficient to trip the transmitter, it should be avoided.

This set is designed to accommodate two types of gaseous tubes for keying. The type 0Z & BH with split plates and the Type 13A with split cathodes. The type BH & 0Z tubes, although less sensitive than the 13A are used only because of the simplicity of battery connection. The polarity of the output is such that one common battery can be used for the entire set. Both types can be connected several different ways including series connection, resulting in a sensitivity equal to that of a thyratron. The full wave connection used in this installation utilize both halves of the sine wave. This results in better regulation and smoother output which is desired in keying a transmitter of this type.

The transmitter excited by this tube is of the oscillator-amplifier type, that is, a transmitter consisting of one transmitter driving another. Either one could be connected to the antenna to produce ample range for buoy use. However, this would leave the oscillator connected directly to the antenna which we believe is rather undesirable because the antenna on the buoy is subject to greater variations than are encountered at a shore station, which may vary the crystal lag considerably. (These antenna variations consist of changes in its load due to unavoidable fluctuations of the antenna tuning inherent in all small portable installations.) Even though the antenna load could be held constant the starting of the crystal would be somewhat retarded by the greater original load on the oscillator. When the single oscillator transmitter was used at the shore station under more favorable conditions, some trouble was encountered with crystal lags. In fact it can become slow enough to exclude the dots completely when used for code transmission. In view of the above it was decided to adopt the oscillator-amplifier type transmitter for buoy use, although it did consume additional power.

This transmitter functioned smoothly in the buoy during the entire season with combinations of different type tubes. The flexibility of the transmitter, especially when wired to accommodate the type 1F4 or 49 tubes, makes it adaptable to almost any type of keying that may be required in the future. The 1E4 tube is slightly superior for use in this installation. Its characteristics are midway between the type 32 and 33 tube, and it was originally intended also to use the 1F4 in both stages of the audio amplifier, thereby making all four tubes of the buoy the same. This, however, would entail a slight increase in battery consumption, and the present combination seems to provide sufficient sensitivity and power. This tube, (1F4), is connected as a pentode in the oscillator and as a triode in the amplifier stage. (Neutralized triodes are used instead of screen grid tubes which require no neutralization, because of their greater efficiency.) The amplifier, incidentally, must be neutralized accurately because of the tuned grid chokes. These are not absolutely necessary; they contribute only to the oscillator efficiency.

In addition to the gaseous tube, the mechanical relay and fathometer methods of keying were also tried. The fathometer method was unsatisfactory because it did not reproduce an exact replica of the bomb sound. Only the beginning of the sound wave was controlled, the length depending on the characteristics of the circuit; water noises resembled bomb waves. Direct coupling is desired between the amplifier and transmitter so that the pen of the chronograph could record a replica (except in amplitude unless the chronograph is equipped for such) of the bomb impulses received

at the station. This is most desirable, especially at a robot station, as such a record adds valuable information and furnishes a basis for accepting or rejecting a weak bomb signal (due to the rocky or uneven ocean bottom frequently encountered on this coast). A replica on the bomb signal has no value after the first second duration, consequently the thermostat, or any cut-off arrangement may be adjusted to operate soon after the first bomb impulse so as to cut the set off the air after the first second or so, thereby leaving the air free of interference to the signals from the other RAR stations.

The mechanical relay, although considerably faster than the chronograph pen relay, has no particular advantage for keying. It was used only during the period the stability and other physical properties of the buoy were tested. The relay consisted of a Baldwin headset with contacts attached. The relay was retained in all subsequent installations in the plate circuit of a tube-type thermostat. It was connected to a delayed action relay which proved rather delicate for this heavy work and was therefore discarded and a thermostat substituted until a commercial type relay could be obtained. There are several suitable types on the market. A photo electric tube was used in the grid of a keying tube, and this photo electric tube was actuated by the light from the ionized gas of a tube on the output of the audio amplifier. This yielded surprisingly satisfactory results but was not given a trial in actual service.

The method of measuring lags in the buoy circuit should be mentioned. It consists in using the fathometer with the dial revolving at fast speed. The input terminals of an ordinary amplifier, in parallel with the input of the buoy set, are connected across a single magnetophone. The output of the ordinary amplifier and the buoy set, (transmitter output), are similarly connected, (in parallel), across the neon tube of the fathometer. The noise of the fathometer oscillator contacts closing actuates the magnetophone when held close to the contacts. The separation of the resulting two neon flashes is a measure of the lag in the amplifier-oscillator circuit. Difference in time can then be accurately determined to less than one one-thousandth of a second.

With the volume control set at maximum the underwater range of this buoy was approximately the same as an average shore station when actuated by sound waves emitted by either the fathometer or detonators. When a test was to be made for distance at the last location at Shelter Gove, California, strong detonator returns were received at one mile intervals up to twelve miles. Returns then stopped abruptly, and not even an indication could be received beyond that distance regardless of the size of the bomb. This condition occurs occasionally at shore station sites and we are inclined to believe it is due to the contour of the ocean bottom, as it is usually remedied at a shore station by moving the hydrophone to a slightly different location. Since this was the last day of the season, time did not permit the installation at a regular RAR location where a complete test could be obtained; however, the radio transmitter did give perfect recordings on the tape up to a distance of 140 miles. The recordings were made from water noises which actuated the buoy when it was left out during a trip to Oakland. The frequency used was 2492 kc which undoubtedly is less efficient than 4000 kc on a ten foot antenna.

I am satisfied personally with the buoy and that further tinkering with the electrical circuits, antenna and barrel itself will not be required. If any complications should arise which would limit the range, it could only be in the underwater suspension gear that may cause more noises than necessary, as identical magnetophones and amplifiers, (except cable loss booster), are used at both the shore stations and the buoy. No attempt was made to construct a special mounting for the magnetophone. The unit was merely lashed to the anchor line with marlih. Should noise limit the range with this simple support in heavy weather, attention then can be given to the magnetophone suspension. If this shows marked

improvement then, and only then should the original sensitivity of the amplifier be restored, (replace 1B5 with 1B4 tube). However, from the moderate tests we have given it so far, I believe the simple method we now use will be satisfactory.

The construction of the barrel looks incomplete and it can be improved upon, but it should be remembered there were no funds available for a more elaborate design. Other than the barrel itself, which was purchased from standard stock, the ten-foot length of antenna tubing and the six-inch bakelite tube were the only parts obtained especially for the buoy. The framework, radio equipment, magnetophone, insulators, cable, tubes, and batteries were already on hand as spare gear.

Another innovation that may be kept in mind is the use of a storage battery for counterbalance instead of the dead weight now used. In any case, I believe the development should not be "frozen" to one definite type, at least until the new series of two volt tubes are released, and which should contribute considerably towards efficiency.

While the features in themselves are old, we feel that some may be original for buoy use, namely:

1. Link coupling to a coil combined within an insulator.
2. The use of an oscillator-amplifier type transmitter to reduce crystal lags with any type of keying.
3. Gaseous tube keying, causing the transmitter to trip definitely or not at all.
4. The use of an automatic cut-off circuit, making it possible for the buoy to cut itself off the air automatically on a prolonged sound and returning to the air automatically after the sound has subsided.
5. Series operation of filaments: This results in a more efficient method of utilizing dry cell, (1-1/2 volt), batteries on tubes designed for 2 volts.

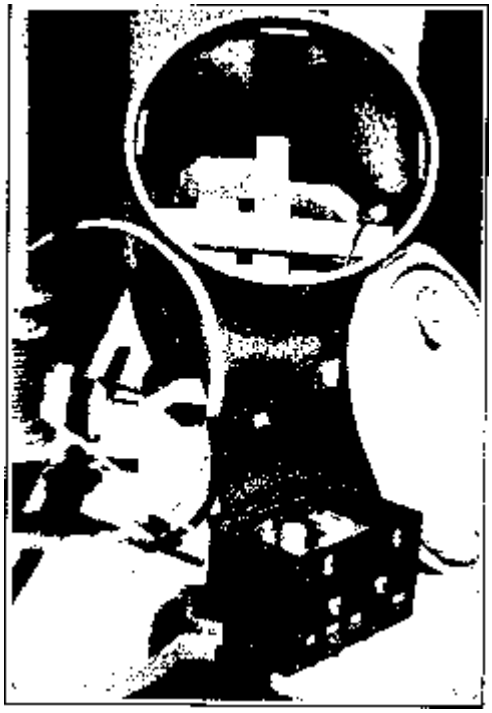

Complete buoy with parts.

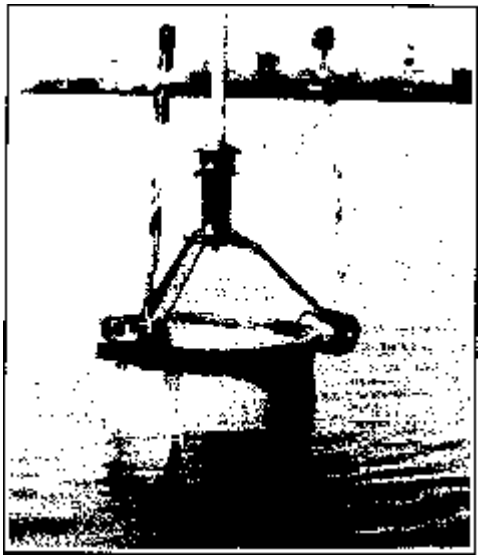

Insulator and antenna support.

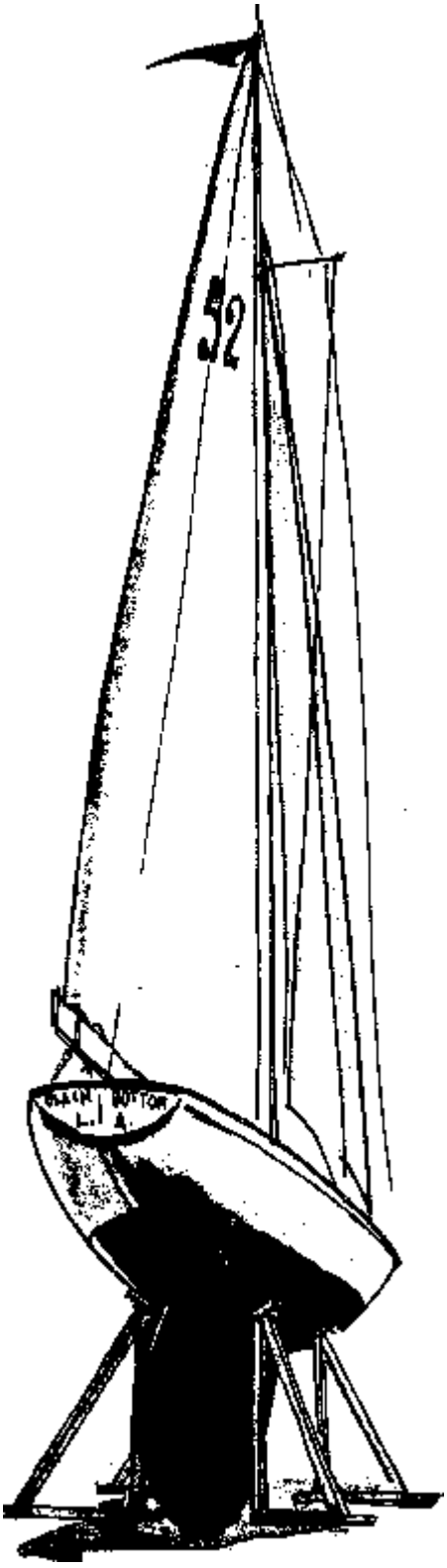

My Love

There is a sweetheart I adore,
She is my heart's desire,
Each time I gaze along her curves
It sets my blood on fire.

She's absolutely right for size,
She's steady as an oak,
Her manners are above reproach,
She doesn't drink or smoke.

Her curves are just where curves should be
She's satin smooth to touch,
And for the pleasure she affords
She doesn't cost me much.

For sleeping, say, she can't be beat,
She makes me feel at ease,
Her gentle, rolling motion is
The kind that's sure to please.

I've fondled every curve and rib,
I've felt her every joint
And cannot seem to find one fault
Of which to make a point.

She's sensitive, though not too much,
But like all things much used
Will show a little wear and tear
If too much she's abused.

The one thing I partic'larly like—
She never answers back
And never weeps if, when she's bad,
Her bottom round I slap.

Just thoughts of life without her and
A lump comes in my throat—
I still maintain she is the best
Of any BOAT afloat.

—M. A. Boye.

Reproduced by courtesy of MOTOR BOATING

TRIANGULATION SOUTHEAST ALASKA, 1936 - GHILKAT RIVER AND WHITE PASS
(Extracts from Season's Report)

H. Arnold Karo, Hydrographic and Geodetic Engineer
Commanding Officer, U. S. Coast and Geodetic Survey, M. V. WESTDAHL

Due to the long daylight hours, it was possible to make the climbs to the peaks and return in one day, although of necessity, a long day. One additional man above the number normally used was added to each party in order to lighten loads and speed up the progress. It is believed that this additional man paid for himself many times over in speeding up the work. The normal party consisted of one officer and four men with one additional man in camp as cook. The Assistant Engineer on the WESTDAHL was detailed as an extra man to operate the truck loaned by the Alaska Road Commission.

The increased mobility of the field parties and the exceptional weather encountered as a whole made it possible to complete these arcs without resorting to camping on the peaks themselves. Several times, however, the parties "siwashed it" overnight on some of the peaks in order to complete the work at hand.

It is believed that, with the weather conditions usually found in Alaska, camping at the stations would be almost imperative in order to utilize the breaks in the weather when they come; but unusual weather conditions demand unusual treatment, and the highly mobile type of party described proved quite successful. It is believed that this plan yielded most in the way of results and progress. On several occasions, the "0"-party, travelling light, started on a four or five thousand foot climb at noon, reached the station, observed it, and returned to camp the same day. During the climbs for observing, the observer carried no pack. As a result he was in condition to start observing almost as soon as the instrument was set up, thereby saving much valuable time. Many are the times the observer finds himself too unsteady to observe for some time after reaching the station due to excessive fatigue occasioned by a heavy pack; or if he does attempt observing, he finds the results rather erratic and jumpy, especially the first observations. I am convinced that no small share of poor results on mountain triangulation can be traced to lack of initial steadiness on the part of the observer.

Recovery and Marking of Stations

Much has been written on this topic and apparently much can still be written or at least repeated, time and time again. If the results of any scheme of triangulation are to be of permanent or lasting value, the station marks themselves must be permanent.

A few more minutes spent in marking a station properly will mean the difference between its being found at some future date and its being reported as missing. It seems to be common practice, at least in the past, and not so distant past at that, to cement the bronze station mark in a depression in the rock rather than bother with drilling a hole to set the mark properly. Even if a hole is drilled, sometimes it will be only of shallow depth, the deficiency being made up by piling concrete around the mark. When this is done the concrete shrinks or sloughs away, and leaves the mark protruding for a considerable portion of its length. Holes for station marks should be drilled sufficiently deep to take the entire shank and to allow the head of the station mark to be countersunk in the rock. It the head of the mark is properly countersunk and the shank spread at the bottom so that it will just go into the drill hole, only a small amount of cement is required to complete the job and one may be sure that the mark is there to stay.

On the Chilkat River arc, the stations were placed a few hundred feet down from the tops of the peaks where possible, as these peaks usually had small tufts of clouds hanging over them. By so doing it was possible to complete the observing some time in advance of that which would have been required had the stations been put on the very tops of the peaks. On the White Pass arc this was not possible, since to do so would have narrowed the scheme considerably, thereby weakening it; so the stations were placed on the tops of the peaks and what climbs they proved to be! It is doubtful if there are many peaks harder to ascend in all of Alaska.

SURF LANDINGS - 1901

The technique and excitement of difficult surf landings have not changed much since the time of Magellan. These operations always have been and probably always will be a necessary hazard of coastal survey parties, particularly in remote place, and because the waves are just as high and whimsical now as then, it is one of the few remaining "primitive" activities in an otherwise modern and mechanized civilization. The following is an excerpt from the semi-annual report of Assistant Ferdinand Westdahl, Commanding U. S. Coast and Geodetic Survey Steamer McARTHUR, December 31, 1901.

"- - - The surf is always bad here, but the first landing was successfully accomplished, and the re-embarkation likewise. The surf increased however, and the next landing on a short, steep beach of shingle on the southeast face of West Cape Lazareff proved disastrous. The boat was turned over and all the occupants thrown into the surf. All managed to reach the beach and to secure the boat, but the instruments, lunch, etc. were rendered unfit for immediate use. This occurred around a point and out of sight from the ship. In the meantime the ship got under way to run a line of soundings close to the shore and the shipwrecked party was soon discovered huddled, partly undressed, around a fire, and the boat hauled up on the beach just out of the surf. I anchored the ship abreast the party and as close in as I deemed it prudent to approach. During the afternoon the remaining whale boat in charge of the 1st Watch Officer was sent in to render assistance by anchoring just outside the line of breakers and attempting to float a line on shore to the party. The shore party succeeded finally, after many fruitless attempts, to reach the line and haul in the stronger line to help them launch their boat. This had already been badly stove in landing so that the shore party did not consider it safe to embark in it, but they put into it all the gear, lashing it to the thwarts, and attempted to launch it while the men in the boat anchored outside the surf pulled with all their might on the line fastened to it. The beach was too steep and the surf too heavy for them so that the boat filled again and again. To lighten it all the gear was finally taken out and in that condition she capsized in the surf but kept afloat, and the outside boat's crew pulled her out and towed the derelict to the ship. There seemed to be no other prospect for the shore party than to scale the steep bluff behind them and walk around the shore to the eastern corner of Otter Cove, where it would be feasible to land for them. The day was nearly spent and it would be midnight before they could reach their destination. I sent some provisions and liquor, headed up in a cask, in the remaining whale boat to be floated in to them. By this time the tide had turned to ebb, and there came a lull in the surf, of which the shore party took advantage and waded out to the boat held in the breakers, and they were all brought on board. The ship remained at anchor here all night, the strong westerly wind having calmed down, and in the early morning at low tide the instruments and boat gear were successfully taken on board."

RECENT IMPROVEMENTS IN THE STANDARD AUTOMATIC TIDE GAGE

E. C. McKay, Chief, Section of Tides,
Division of Tides and Currents,
U. S. Coast and G-eodetic Survey

The standard automatic tide gage described in detail in the "Manual of Tide Observations", Special Publication No. 196, has recently undergone modification, so that some of the descriptive matter of the manual needs revision or amplification to make it applicable to the latest type gage.

The principal change is in connection with the pencil screw assembly and its purpose is to facilitate the cleaning of the pencil screw and pencil arm bearing. Failure to keep these parts of the gage thoroughly cleaned has been one of the most common causes of interruption to automatic gage records, and the principal factor contributing to this condition has been the difficulty of accomplishing a thorough cleaning without disturbing the wiring of the gage. To overcome this difficulty, the pencil screw assembly of the new type gage has been modified so that the screw can now be easily and quickly detached for cleaning purposes without disturbing the wiring or any of the adjustments of the gage. With this change in design, interruptions to the record caused by sticking between pencil arm and pencil screw should be of less frequent occurrence or overcome entirely by reasonable care on the part of the observer.

In the arrangement described in Special Publication No. 196, the pencil screw is rigidly attached to the counterpoise reel, to which the float wire reel is secured by clamp nuts. The new arrangement, by the introduction of a third bearing, makes it possible to have a separate shaft for the float and counterpoise reels so that the gage can be set up and completely wired independently of the pencil screw. The pencil screw can then be placed in position by fitting the slot in its end over the spline in the collar of the reel shaft. The opposite end of the pencil screw is held in place by a bearing screw with a capstan head which can be backed off sufficiently to allow for disengaging the pencil screw from the reel shaft.

The shaft on which the float and counterpoise reels are mounted has, between the reels, a flange from either side of which projects a pin about 5/8 inch off center. Each reel has in its end a ring of 12 holes which fits over these pins and allows for as many different positions of the reels. A capstan nut at the end of each reel holds its reel in place, or when backed off allows either reel to be disengaged from its pin and turned to the desired position. This arrangement permits the separate adjustment of either float or counterpoise wire independently of each other.

With this arrangement, it can readily be seen how the procedure of cleaning the screw and bearing, particularly the latter, is greatly facilitated and simplified. When with the older design there was evidence of sticking between pencil arm and pencil screw, there was a temptation on the part of even the more careful observers or inspecting officers to confine the cleaning to the exposed surface of the pencil screw. Frequently this would prove ineffective in improving operation as more often than not it was the inaccessible pencil arm bearing that was the source of the trouble. Accumulated dirt in the bearing could be removed only by turning off the pencil arm which could not be accomplished except by disturbing the wiring, a rather unhandy operation which most observers and some inspecting officers seem to have avoided as far as possible. The ease with which the pencil screw can now be removed and the pencil arm bearing exposed is such that with reasonable understanding and care, loss of record from this greatest previous source of trouble should be practically eliminated. The importance and purpose of these improvements and their operation should be thoroughly understood and emphasized to the observer by the inspecting officer.

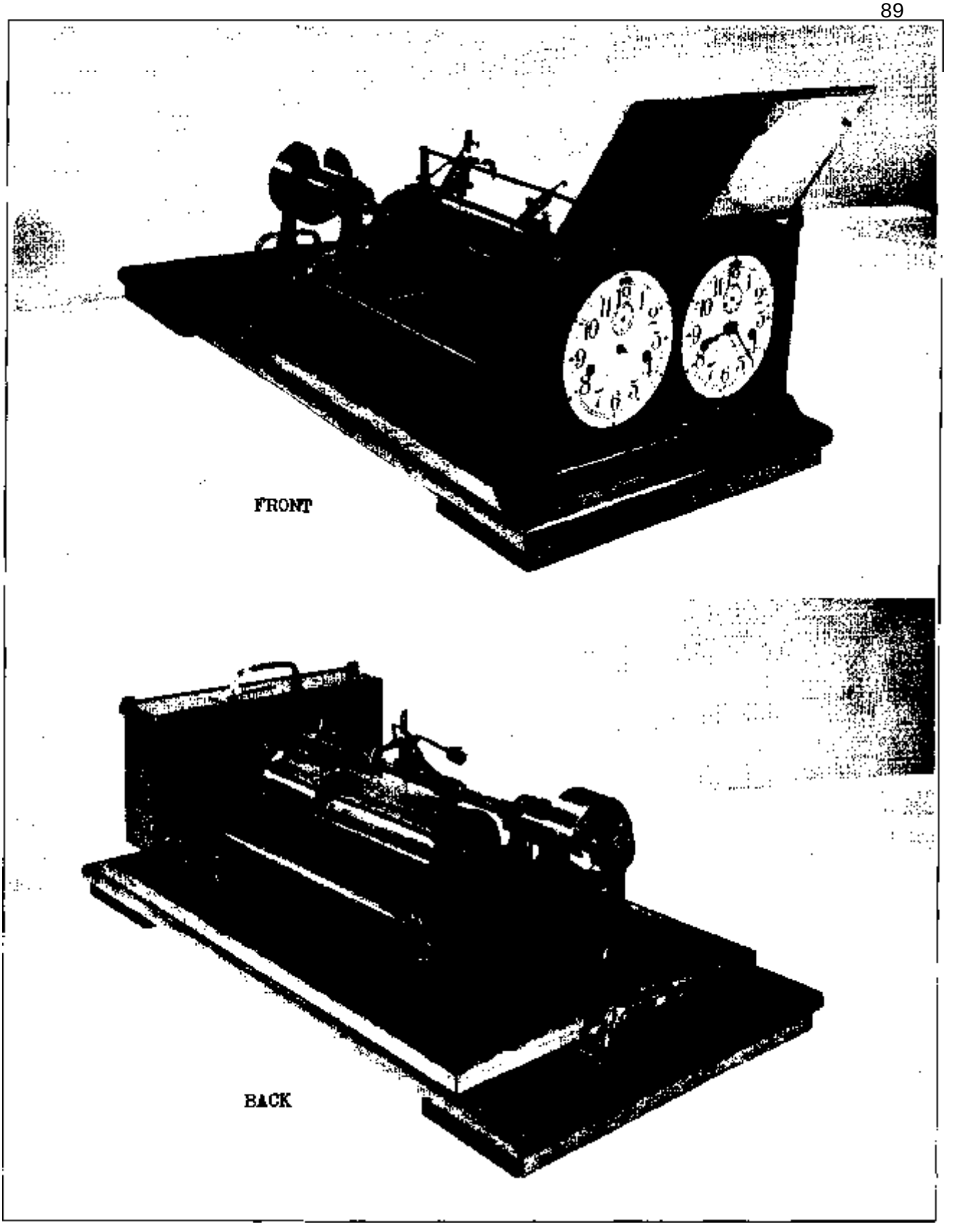

STANDARD TIDE GAGE WITH NEW

PENCIL SCREW ASSEMBLY

Another advantage gained by the modified design of the standard gage is that the procedure of wiring the gage is greatly simplified. The comparatively complicated instructions, in paragraph 94 of the "Manual of Tide Observations", for properly proportioning the turns of wire on the two reels and at the same time bringing the record pencil to the proper position on the pencil screw can be disregarded with the improved gage. It is necessary only to cut the float and counterpoise wires to the proper length and thread each on its reel independently. The pencil screw with the pencil arm at any desired position can be attached to the reel shaft after the wiring has been completed.

The solid bronze or nickel-chromium wire previously used with the standard gage is being replaced by similarly sized cable made up of seven wires stranded in rope fashion. This wire is stronger, more flexible, and less subject to kinking than the solid wire. Once kinked, however, it is difficult and sometimes impossible to remove the kinks so that this cable should be handled carefully when threading it on the reels.

These improved gages have already been installed at a number of stations and will eventually replace all gages of older design as rapidly as these can be reconditioned. There has also been developed a new metal cover of special design for the standard gage but as yet only one gage now in operation has been so equipped.

The improved design is illustrated in the accompanying photographs, which correspond to the illustrations in Special Publication No. 196.

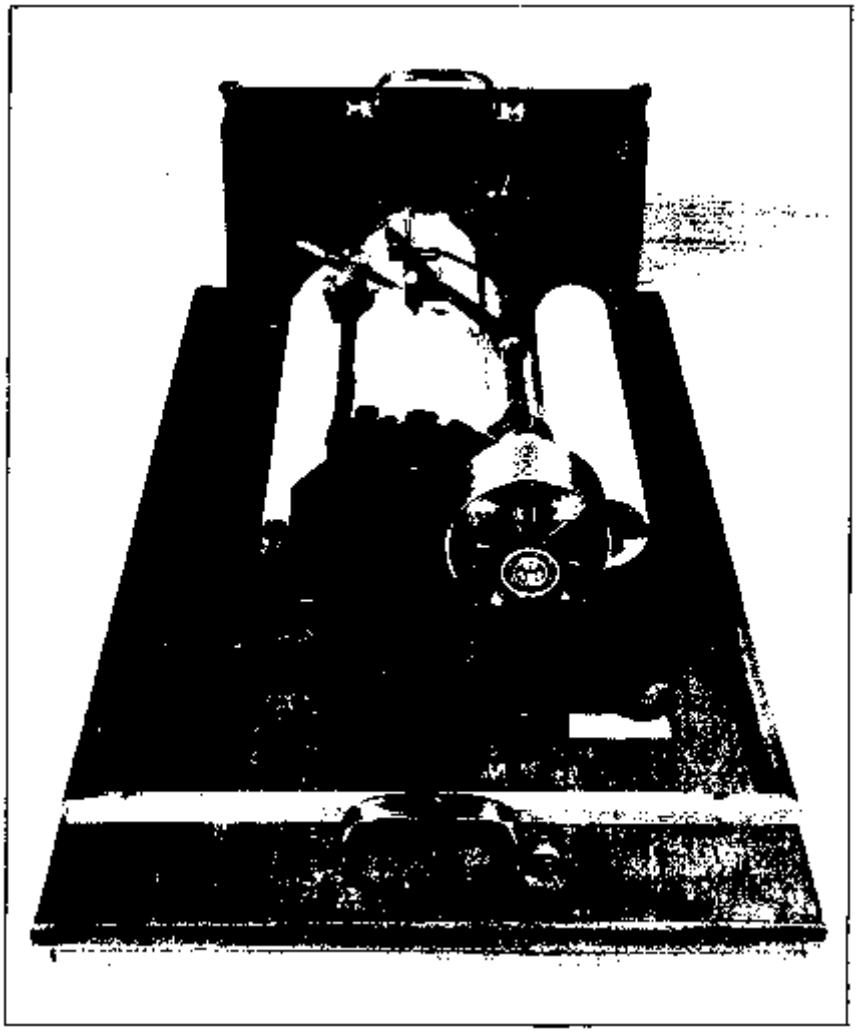

FLIGHT CHECK OF AERONAUTICAL CHARTS

John D. Kay, Aeronautical Engineer
U. S. Coast and Geodetic Survey

The Sectional Aeronautical Charts, published by the U. S. Coast and Geodetic Survey, are given a detailed field check of a nature that is accorded no other series of charts published, either in this country or abroad. This "treatment" is Flight Checking which is checking from the air for accuracy and completeness and detail shown on the Aeronautical Chart. The flight check is made by a trained observer flying back and forth over the entire area of the chart, comparing the actual terrain with the chart of that area. The necessary corrections, deletions and additions are then made, or recorded, while in flight.

The Sectional Aeronautical Charts, in 87 sheets, on the Lambert Conformal Conic Projection, at a uniform scale of one to five hundred thousand are now available for the entire United States. These charts show all major drainage, contours at one thousand foot intervals with gradient tints, spot heights, practically all railroads, cities and towns, important highways and roads. They show canals, dams, transmission lines, prominent bridges, towers, mines, prominent buildings and many other cultural features of landmark value; and in addition there is superimposed all available aeronautical data, such as the airports and the facilities available at them; the radio beams and their transmitting frequency and identifying signals; light beacons; the periods of radio weather broadcasts; and much additional miscellaneous aeronautical data . . . . . an enormous amount of detail to represent completely and accurately. To obtain the utmost accuracy and clarity in the representation of this data the Coast and Geodetic Survey employs the additional "treatment" of flight checking for each sectional chart.

Comparatively few of the users realize that the aeronautical charts that now completely cover the United States have been entirely flight checked; even fewer are aware of the fact that this method of checking charts was started nearly twenty years ago by the U. S. Army Air Corps . . . . . as a vital necessity. But flight checking as performed today is quite a different procedure from what it was when the first airway strip maps were being prepared. Perhaps it would be well to mention the early maps and flight checks before attempting to present some of the details of flight checking as it is done at present.

The first airway maps were merely blue prints of rough, -- very rough by present standards -- compilations of a few limited routes then being flown by the personnel of the Army Air Corps. After these strip maps, with their very limited topographical information, had been compiled, copies were taken into the air, and by flying over the area practically all of the aeronautical data to be shown on the map was added by visual inspection, tempered with a fair amount of hope. Possible landing fields were located and inspected from the air and indicated on the maps by an "X", with the hope that the field would make a suitable landing area. Sometimes the flight checker guessed wrong and the first pilot to land at one of these spots marked "X" checked on the error after crawling out of the wreckage.

Somewhat interrelated, is the evolution of the aeronautical maps and flight checking. Following the first "blue print" maps a few of the most frequently used routes were more completely mapped. In 1921 Strip Map No. 1 between Uniontown, Pa. and Washington, D. C. was issued by the U.S. Army Air Corps and during the following five years several additional strip maps, mostly for the official use of the Air Corps, were compiled and printed by the U. S. Engineer Corps. During this time sporadic flight checking was attempted, mostly to obtain aeronautical data which was so limited during this period. These strip maps, limited in information as they were, soon created a demand for similar maps for routes of interest

to commercial aviation. This need was met by the Air Commerce Act of 1926, which authorized the charting of airways and the publication of aviation maps. Under the provisions of this act, in November 1926, a section was organized in the Coast and Geodetic Survey to compile and print aeronautical maps. For two years strip maps were published but in 1929 it was decided to compile sectional charts in addition, the program calling for charts to cover all of the United States. The first of these, the Chicago Sectional Aeronautical Chart was published in 1930 and followed by two other sectional charts that year. At the same time certain well travelled routes were covered by additional strip maps.

By the time of the publication of the first sectional chart in 1930 flight checking became an established full time duty and the late Lieut. Commander A. L. Giacomini became the first Flight Check Observer in the Coast and Geodetic Survey. The Bureau of Air Commerce collaborated in this by assigning an airplane and pilot to these duties and flight checking has been a regular part of the program during the past seven years. Additional funds, provided by a Public Works Administration grant to the Coast and Geodetic Survey through the Bureau of Air Commerce, permitted the compilation, the flight checking and printing of more charts from October 1934 to June 1935 than in the previous five years. The office personnel during this period, were expanded from ten to one hundred and sixteen and the flight checkers from one to eleven. During this period fifty-six charts were compiled, seventy flight checked and forty one printed. (See Figure).

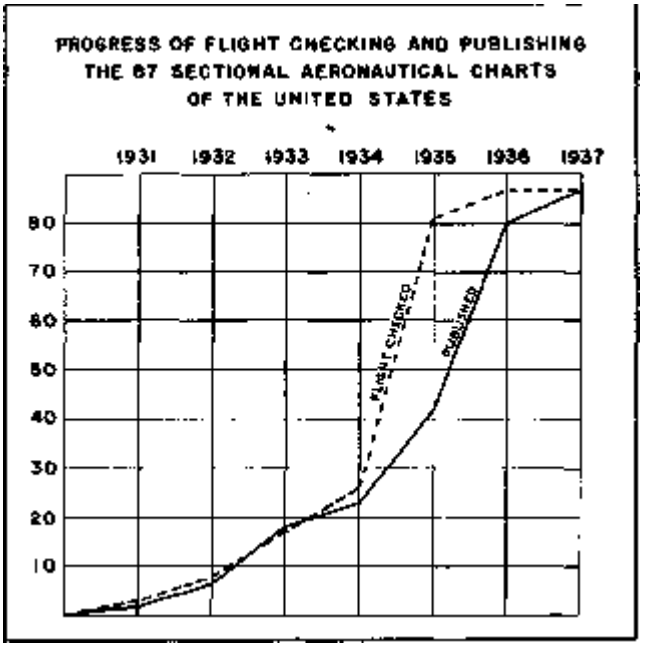

An area of more than 2,554,000 square miles in forty-six different states was flight checked and the charting of the entire United States for the first time was well advanced. After the exhaustion of the P.W.A. funds the frequency with which new charts were printed decreased but with the publication of the Green Bay chart, in October 1936, the entire series of the 87 charts covering the United States was available. An enormous undertaking that was greatly aided by Flight Checking.

Only those few who have had actual experience in attempting to compile comparatively detailed maps from very sketchy and generalized information can appreciate the problems that this entails. Less than half of the United States is covered by detailed topographic maps (one of the main sources of information) and many of these are so old as to be practically obsolete. Thousands of miles of new highways have been constructed in the past few years, changes in railroads have been made and hundreds of miles of trackage abandoned. Large changes in populations of cities and towns occur from one decennial census to another. New reservoirs, new transmission lines and other cultural features are constructed yearly, plus a thousand and one "landmarks" that appear on no map.

These facts indicate that there is a direct inverse ration between the amount and quality of source material and the need for flight checking. It is one thing to compile a chart from the excellent basic material which is available for some areas and an entirely different problem to compile one of an area where no detailed surveys exist . . . . and yet attempt to keep the charts uniform as to the quality of the data shown. It is important to flight check a chart constructed from excellent source

material, in order to obtain and record contemporary changes; but it is vital to have a flight check of one of an area for which only poor or inadequate basic material was available, if we hope to obtain charts of uniform accuracy.

Realizing the "why" of flight checking will better enable one to see the "how" and perhaps give a more thorough understanding of this comparatively new and unusual "treatment" that aeronautical charts receive.

A chart must be compiled before it can be flight checked, and during this compilation a large amount of record work must be accomplished in order to make the flight check of the utmost value; the more carefully this preliminary work is done, the more valuable will the flight check be. One chart is often compiled from as many as fifty different sources and three hundred different maps, ranging in scale from one to five thousand to one to five million, all of which have to be adjusted to the common scale of the compilation. The knowledge that the chart compilation is to be flight checked induces certain procedures that otherwise might not be followed in such detail. All source material is reviewed for the purpose of grading it as to value. Some sections of the chart may have been compiled from map material known to be of poor quality; this is so noted and as the chart is compiled a reliability diagram as well as a source "history" is made. Notes are made as to areas where data are questionable or lacking and such areas are indicated on a diagrammetric form. Places for which map data of the same locality are at variance are indicated and a general report accompanies the compiled chart mentioning items or areas for which additional information is desired, items that should be especially noted while checking, etcetera.

When the compilation is completed, if time and conditions permit, a printed proof is made. If this is not practicable, which has often been the case, photographic copies are made of the compilation. These preliminary copies of the chart with the history are gone over jointly by the compiler and the flight checker. A copy of the "history" of the compilation is given to the flight checker with copies of the chart, mounted on cloth, for better service in the field, and after a final review the chart is ready for flight checking or what might be called field inspection. Flight checking is "field inspection" in a sense, but under conditions that are vastly different from a ground inspection, principally in the speed with which the area is covered and the type of detail that is checked.

Flight check time, like most time concerned with aviation, is recorded in hours, and while the time necessary for the flight check of different charts varies in proportion to their area and the amount of detail, it will be normally from fifty to eighty flying hours per chart. During this period an area of approximately fifty thousand square miles is completely inspected and checked while flying at speeds of around one hundred and twenty-five miles per hour. General topography, elevations, drainage, cities, railroads, highways, airports, as well as landmark details such as dams, transmission lines, prominent buildings. . . .even as to their color and composition, are checked and noted. Every item that can be seen from the air that appears on the chart is checked.

The question as to how much of this enormous amount of detail can be checked during this brief time and while working at such a comparatively high rate of speed requires more than a simple percentage statement for a thorough understanding. It might be well to review briefly the methods that are used and make a few comments on the conditions encountered and procedure applied during a flight check.

Following the completion of the compilation and preliminary review the flight checker moves with his airplane and pilot to a base within the area to be checked. As each flight check project usually covers the area of one sectional chart some three hundred by one hundred and fifty miles

in extent, it is desirable to have two or three bases of operation during the flight check for efficient coverage of the area. From these bases flight lines are laid out, the nature of the terrain permitting, in parallel lines from five to ten miles apart. The flight check is flown over these lines, maintaining a constant course and the area from two and one-half to five miles on either side of the line checked. Occasionally, when conditions warrant, a method of checking by "meandering" is carried out. This consists of following the general trend of a river, railroad or highway, and changing the airplane's course as necessary. It is often desirable to combine both methods during the checking of a large area, using that method best suited to type of terrain and the degree of congestion of detail.

The details of procedure have to be varied somewhat as the physical composition of the area covered by the charts varies. Over thickly populated areas the flying is done at altitudes of around three thousand feet above the ground, in more sparsely populated areas at altitudes of from five thousand to six thousand feet. From these altitudes it is possible to see clearly all the details that are shown on the charts and at the same time check on their relative location to each other and the accuracy of their representation. The higher of the two altitudes used merely increases the "field of view" rather than decreases the amount of detail that can be seen.

One of the most important duties of a flight checker is to decide what items shall NOT be shown on the aeronautical charts. At scales of one to five hundred thousand and smaller it is obviously impossible to show everything in any given area on a chart. The items of greatest relative importance, which most clearly and definitely will aid the pilot or aerial navigator, must be indicated, while those that tend to confuse by congesting the chart must be eliminated.

This problem is most clearly indicated in the case of highways. In some areas, because of lack of other detail, it is important to include many unimproved and secondary roads, while in densely populated areas it is desirable to eliminate all but the most important main thoroughfares. A "selection" problem such as this can be solved in no other way so well as by flight checking, since the flight checker is literally in the same position as the user of the chart. This same need for selection is applicable to drainage, populated areas, landmarks and so forth. Often drainage of large extent is not prominent from the air, small towns are unimportant in congested areas and landmarks which appear prominent from the ground are greatly different from the air, sometimes of no value at all, due to the decided change in perspective.

Seemingly small items, of great importance for air navigation, are checked. Whether or not a railroad, correctly shown as to geographical location, is a single or double track is one of these items; whether or not an important highway paralleling a railroad, for example, is to the north or south of the tracks. At an elevated intersection of two railroads . . . .which one is "over" and which one is "under"? Is an airport northeast of the town or is it to the northwest? A river flows through the city: but is the largest part of the built-up area on the north bank or on the south?. . . .and does it have a characteristic shape? Questions such as these are answered in a second and noted correctly as the flight checker passes over.

Besides deletions, selections, and the small but important detailed changes, it is often necessary to add a considerable amount of new data in correct location, that was not previously shown on the chart. New highways, new railroads, towns and lakes and many other prominent features, that were omitted because of poor or incomplete source material, are added when necessary. These new data are added directly to the chart while in the air, the features being located by using the airplane compass and the ground speed "time factor". In certain cases even the difficult and

seemingly impossible task of adding contours is successfully accomplished by the accurate use of the airplane altimeter, supplemented by sketching.

The vital factor in all flight checking is knowing, to the nearest second of time (two hundred feet in distance), the position of the airplane on the chart. This is accomplished by computing an accurate ground speed and constantly checking this from the known positions of objects on the ground. This ground speed, when a constant course and air speed is maintained, is sufficiently accurate for checking geographical positions along the route not more than ten miles from a known point. An accurate knowledge of the course and speed of the airplane enables a flight checker to locate positions within two hundred feet, which is well within plottable limits on a chart on the scale of one to five hundred thousand. When new data are to be added these locations by aerial traverse are supplemented by sketches (made in the air), aerial photographs, and authentic source material which may often be obtained at the base of operations by personal contact.

Contours are checked by setting the airplane altimeter at the given elevation of an airport, while on the ground, and by dragging (flying a few feet over the point whose elevation is to be determined) the desired elevation. These elevations may be considered correct to within one hundred feet when the readings are compensated for barometric pressure, temperature, and altitude. Data for barometric pressure are obtained by radio at the time the readings are made. All topographical and cultural features, are checked by time, distance, and bearings as they appear on the flight line as well as their relative position to known objects. It is, of course necessary to assume that the major features such as cities, railroads, larger rivers and so forth are in their correct geographical location. With these as starting points, or what may be called control points, the other data are checked as to their relative locations.

After completion of a day's flight check, of about seven hours flying time, if the weather and visibility have remained good, all the changes are replotted on a "smooth" or office copy of the chart kept at the flight checking base, notes are recorded and a daily log prepared. When the flight check of the entire chart is completed the "smooth" copy of the chart along with the flight copy and a detailed written report, photographs, additional source material, etc. are sent to the Washington office where they are carefully reviewed and the necessary corrections applied to the original compilation before the chart is published. If the chart has already been published before the flight check was made, as has sometimes been done, the corrections are applied when the next fully revised edition is printed.

As in most field work, "weather" is an important factor. Under conditions of limited visibility, less than two miles, and ceiling (height of clouds) of less than fifteen hundred feet, flight checking cannot be carried out efficiently or to advantage. So to make up for days lost by unfavorable weather while in the field all "good weather" must be utilized to the fullest extent. Long hours are flown on perfect days and often late afternoons and darkness are used for cross country flights when changing bases. The weatherman seems to ignore holidays for it is truly remarkable how often, almost invariable it seems, clear days coincide with Sundays and holidays.

Because no one can predict where a pilot may go the entire area of the chart must be checked and it is often necessary to deviate from established air routes, to fly over terrain that is seldom flown over, or even rarely visited on the ground. Deserts, swamps, forests and mountains are crossed as they are met on the flight lines and the flight checker in a day's flight may fly over all of these different types of country, the terrain at times varying from two hundred feet below sea level (Death Valley) to fifteen thousand feet above sea level (Mt. Whitney) within a few

hours flight. Such conditions are not conducive to boredom but inducive at times to premature ageing.

While no special equipment is necessary for flight checking it is nevertheless desirable to have equipment that has certain characteristics. When it is realized that two daily flights of from three to four hours duration may be made, and that charts and navigation instruments must be used constantly, that very close cooperation between the flight checker and pilot is necessary, these minor characteristics become very important for continued efficient flight checking. Good visibility for both the flight checker and the pilot, reasonable comfort in seats and working space, a weather proof cabin of moderate sound proofing, space for supplementary navigational instruments, etc., are important. The airplanes recently used have been single engine, high-wing cabin monoplanes with the seats so arranged that the flight checker can have maximum visibility and yet have room to use his charts and instruments and at the same time communicate verbally with the pilot without the use of telephone. In addition to the regular flight instruments, an accurate aperiodic compass, sensitive altimeter, drift indicator, radio, clock with sweep second hand, aerial camera, pelorus, plotting board and miscellaneous scales, graphs and tables are used. These instruments must be used while moving at a speed of around one hundred and twenty-five miles per hour which make their accessibility of paramount importance.

The proper use of this equipment has obtained results that are very gratifying and these in themselves point out and prove the value of this additional "treatment" accorded the Coast & Geodetic Survey Aeronautical Charts. In the future flight checking may be able to utilize additional instruments and methods that have not as yet been generally used, either because the instruments themselves have not been perfected to the extent desirable for flight checking, or because the methods necessary for their use would be too lengthy or costly. The use of the "gyro pilot" for holding a steady course and relieving the pilot of tedious routine flying has been for sometime desirable but it is a comparatively costly instrument and is not generally installed on single motored aircraft of the type used for flight checking. Radio equipment and the directional loop have not yet been perfected to a stage where they will give the accuracy of position necessary for flight checking. But new equipment in this field is being constantly developed and beyond doubt some of it will be of benefit to the flight checker in his work. A more extensive use of vertical air photographs, perhaps a continuous strip of overlapping photographs, over the major airways is certainly desirable and only the cost (which is being reduced constantly) and time (delay necessitated by waiting for favorable photographic weather) have prevented this desirable aid being combined with regular flight check procedure.

As a direct result of flight checking more than twelve hundred individual changes have been made on a single sectional chart. Because a flight checker uses the charts and has the same "view point" as the ultimate user of the chart he is best able to make suggestions and recommendations for their improvement and to evaluate changes under consideration. The flight checker, by the very nature of his work, is constantly in contact with airplane pilots and is therefore able to note and transmit their needs and requirements to the office. By personal contact the flight checker is often able to obtain new and valuable source material for compilation and revision that is unobtainable through ordinary channels.

The flight check of the aeronautical charts results in a published chart that has a high degree of accuracy and therefore adds greatly to the safety of navigation of aircraft. The inclusion of practically all information of major importance and the exclusion of unimportant detail that would tend to make the chart confusing is especially important for aeronautical charts that are used under conditions of high speed and limited space. At present the Sectional Aeronautical Charts are the only

series that completely cover our country showing all major topographical features on such a large and uniform scale and they actually provide the best "base map" obtainable of the States as a whole.

Perhaps the best proof of their value and the enthusiasm with which they have been received by the aeronautical field as well as the general public is that recorded in the number of charts issued (See Figure) now reaching a high of nearly thirty thousand aeronautical charts per month.

AERONAUTICAL CHARTS ISSUED
1930-1937
FISCAL YEARS

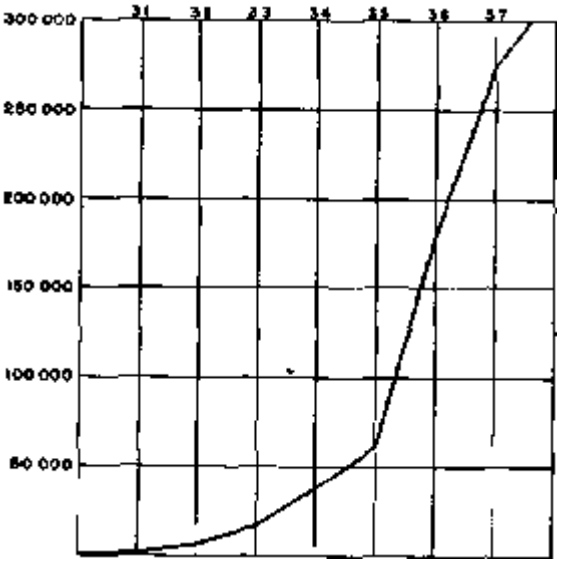

SEISMOLOGY - 1866

The following appeared in the San Jose Mercury for June 21, 1866:

"W. F. Stewart of this city - known to our literary and scientific leaders as Frank - has invented and set up in his saloon a machine for indicating and registering the oscillatory motion of earthquakes. It consists of a nicely adjusted pendulum about four feet in length, suspended in a socket to admit free play in any direction. To this pendulum is attached a three-pound weight. Above the socket and forming a part of the pendulum, projects a common pencil, pointing upward, upon which rests a stationery tablet. The machine is attached to a solid brick wall, and the least motion of the earth must inevitably register its extent and direction. Frank thinks that this machine may be made useful in signaling the approach of earthquakes. According to Humbolt, an earthquake wave travels at the rate of about sixty miles a minute.* The machine could be set up in every telegraph office on the Pacific coast, or wherever earthquakes occur, and arranged in some such, manner as the fire alarm telegraph. Thus the first motion of the earth at Los Angeles, for instance, would instantly signal an alarm in San Francisco, and would give the people of that city fully ten minutes in which to prepare for the shock. As the wave of motion reached each telegraph station successively, the alarm would be repeated and thus kept up almost continuously until the occurrence of the shock. We see no good reason why this invention may not be turned to some such practical use."

The true velocity of a destructive earthquake wave was evidently not known in 1866. It is approximately 200 miles per minute.

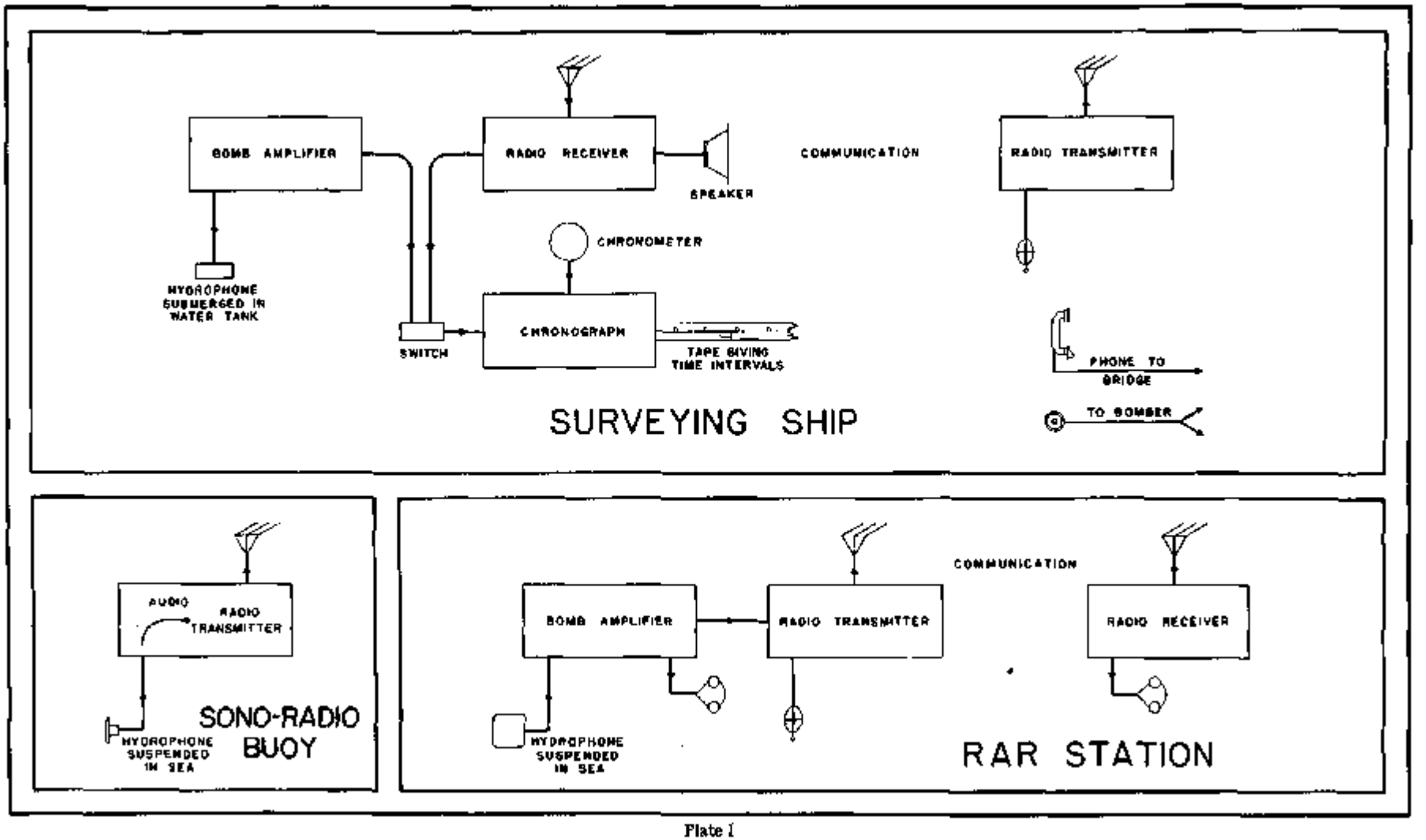
BOMB AMPLIFIER
RADIO RECEIVER
SPEAKER
COMMUNICATION
RADIO TRANSMITTER
CHRONOMETER
HYDROPHONE SUBMERGED IN WATER TANK
SWITCH
CHRONOGRAPH
TAPE GIVING TIME INTERVALS
PHONE TO BRIDGE
TO BOMBER
SURVEYING SHIP
AUDIO
RADIO TRANSMITTER
HYDROPHONE SUSPENDED IN SEA
SONO-RADIO BUOY
COMMUNICATION
BOMB AMPLIFIER
RADIO TRANSMITTER
RADIO RECEIVER
HYDROPHONE SUSPENDED IN SEA
RAR STATION

Plate I

RADIO ACOUSTIC RANGING CIRCUITS

Dr. Herbert Grove Dorsey
Principal Electrical Engineer
U. S. Coast and Geodetic Survey

The accompanying circuit diagrams were drawn primarily for a revised edition of the RAR manual now in progress. They represent what are believed to be ideal circuits rather than what are used by any one hydrographic surveying party. If entirely new equipment was to be built, these drawings would serve as a guide on how to start operations. Some portions of the circuits are taken from Pacific coast procedure and others from Atlantic coast practice, and the ensemble was made up of the best of each, with an attempt to bring everything up to date using the latest types of tubes, and equipment.

For the benefit of those who are interested only in the general procedure and as a guide to the other more detailed wiring diagrams, Plate I was made to show the outline of the entire process. The upper portion shows the surveying ship equipment necessary for RAR. When the bomb explodes in the water, a hydrophone conveys the impulse to the bomb amplifier which makes it strong enough to operate a chronograph (See Plate II). A chronometer marks second intervals on the chronograph tape and immediately after the bomb signal is recorded a switch is changed to connect the chronograph to the radio receiver so that the return radio signal may be recorded on the same chronograph tape. This receiver is generally equipped with a loud speaker so that head phones are unnecessary. In order that there may be communication with the hydrophone stations a radio transmitter is necessary on the surveying ship. This transmitter is separate from the regular ship transmitter and receiver used for official communication with other ships and shore stations, receiving weather reports, distress signals, etc. The RAR transmitter and receiver are used for high frequencies, the standard ship equipment for low frequencies. It is also necessary to communicate with the bridge and either a speaking tube or telephone is used for this. A push button is used to operate an electric bell or buzzer to signal the bomber when to fire bombs, and the desired size of bomb is generally designated by the number of rings on the buzzer.

In the lower right of Plate I is shown an RAR station equipment. Such stations on the Pacific coast are almost always shore stations, but on the Atlantic coast the same equipment is on a "station ship" since shore stations were never successful on the Atlantic coast. In either case a hydrophone is hung in the sea with a cable to the bomb amplifier from which the amplified sound may be heard and it also passes to a radio transmitter which is actuated automatically by the bomb signals. It is this radio signal which returns to the ship to actuate the chronograph. Since communication between the RAR station and the ship is necessary, a radio receiver is provided, which, with the key-operated transmitter supplies high frequency radio communication between them whether the RAR stations are on shore or afloat.

The story of the floating RAR station is probably already past history. The first such stations were the RANGER and ECHO working in Florida waters with the LYDONIA in March 1930 and probably the last such were the GILBERT and WELKER working in Delaware waters with the OCEANOGRAPHER during the summer of 1937.

The successor to the floating RAR station is the sono-radio buoy. My first idea of this was to use a small floating audio amplifier and transmitter on the Pacific coast to be attached to the regular hydrophone for the purpose of sending a weak radio signal to the shore station which would automatically transmit a stronger radio signal to the ship on a different frequency. This arrangement would have eliminated the difficulty

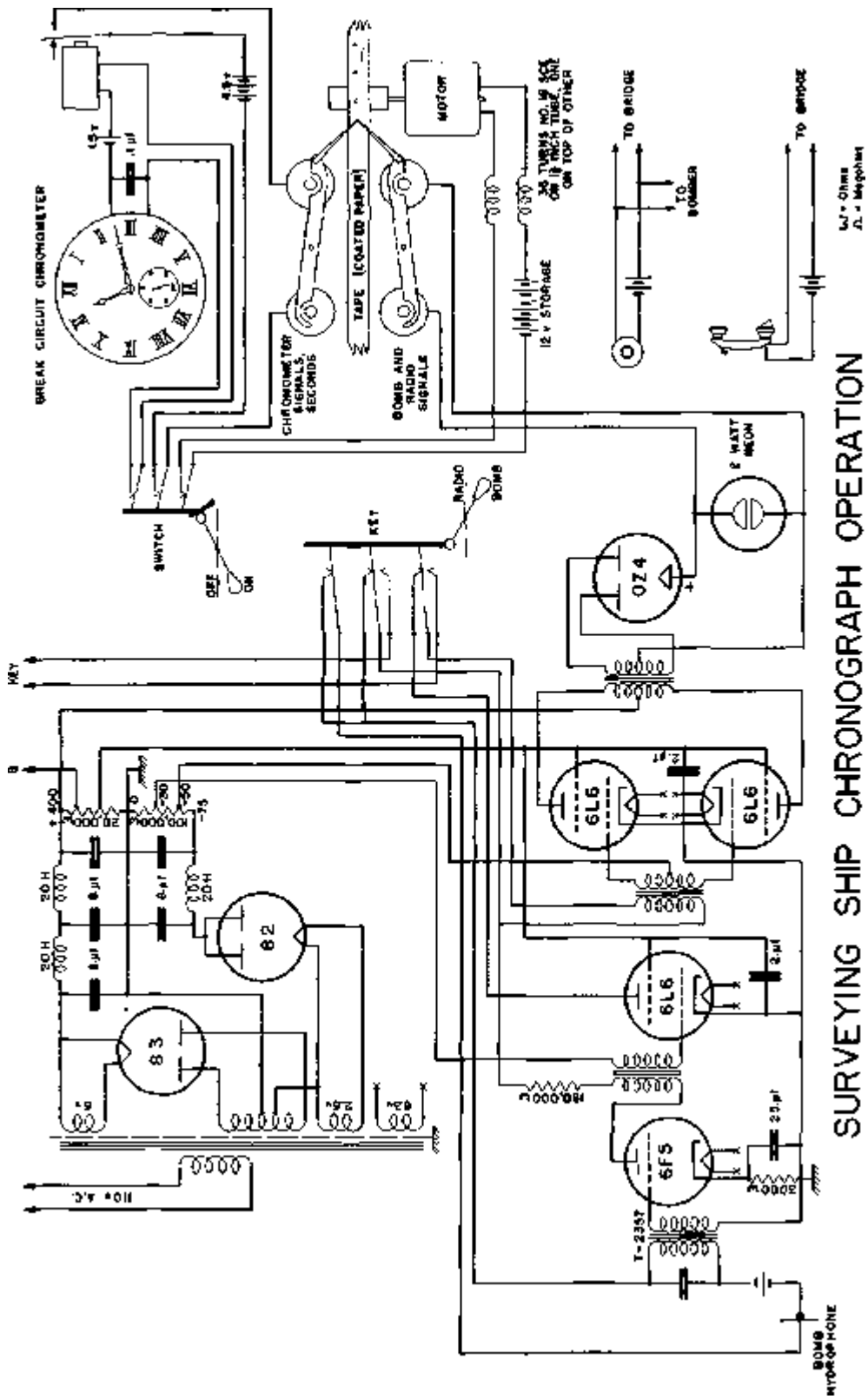

SURVEYING SHIP CHRONOGRAPH OPERATION

P4

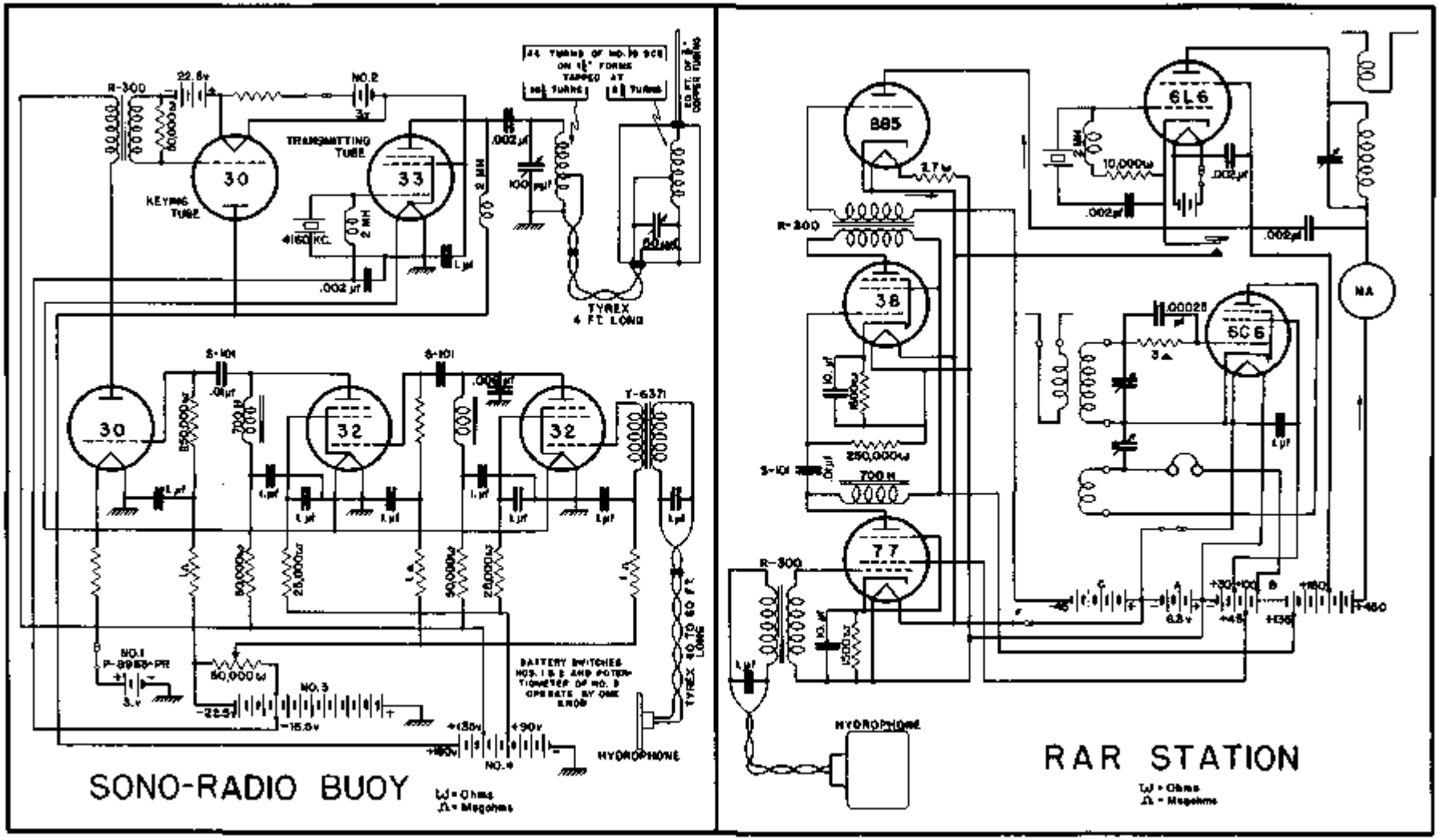
SONO-RADIO BUOY
RAR STATION
TRANSMITTING TUBE
KEYING TUBE
TYREX 4 FT. LONG
HYDROPHONE
BATTERY SWITCHES NOS. 1 & 2 AND POTENTIOMETER OF NO. 3 OPERATE BY ONE KNOB
Ω = Ohms
Ω = Megohms

Plate III

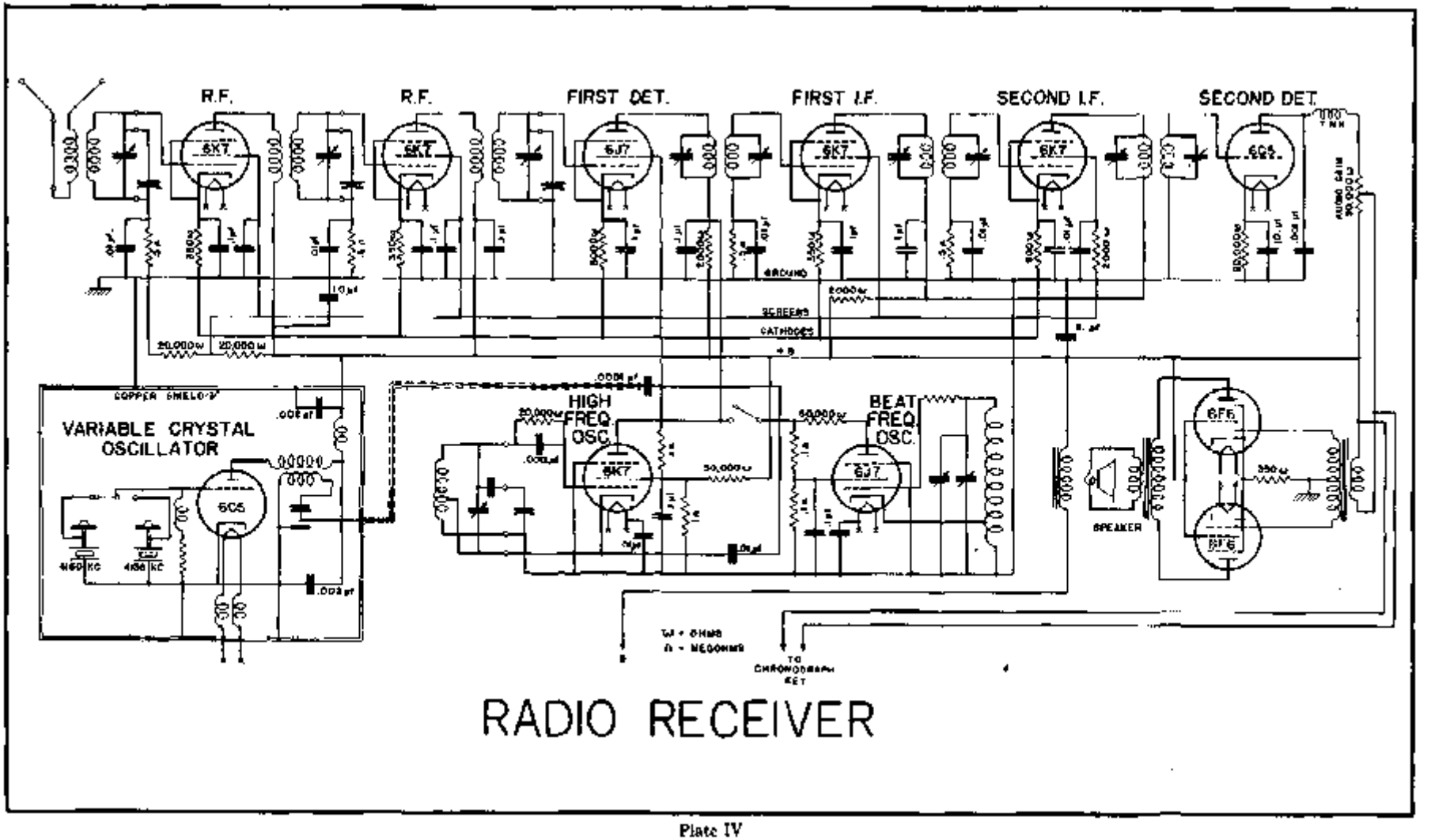

RADIO RECEIVER

Plate IV

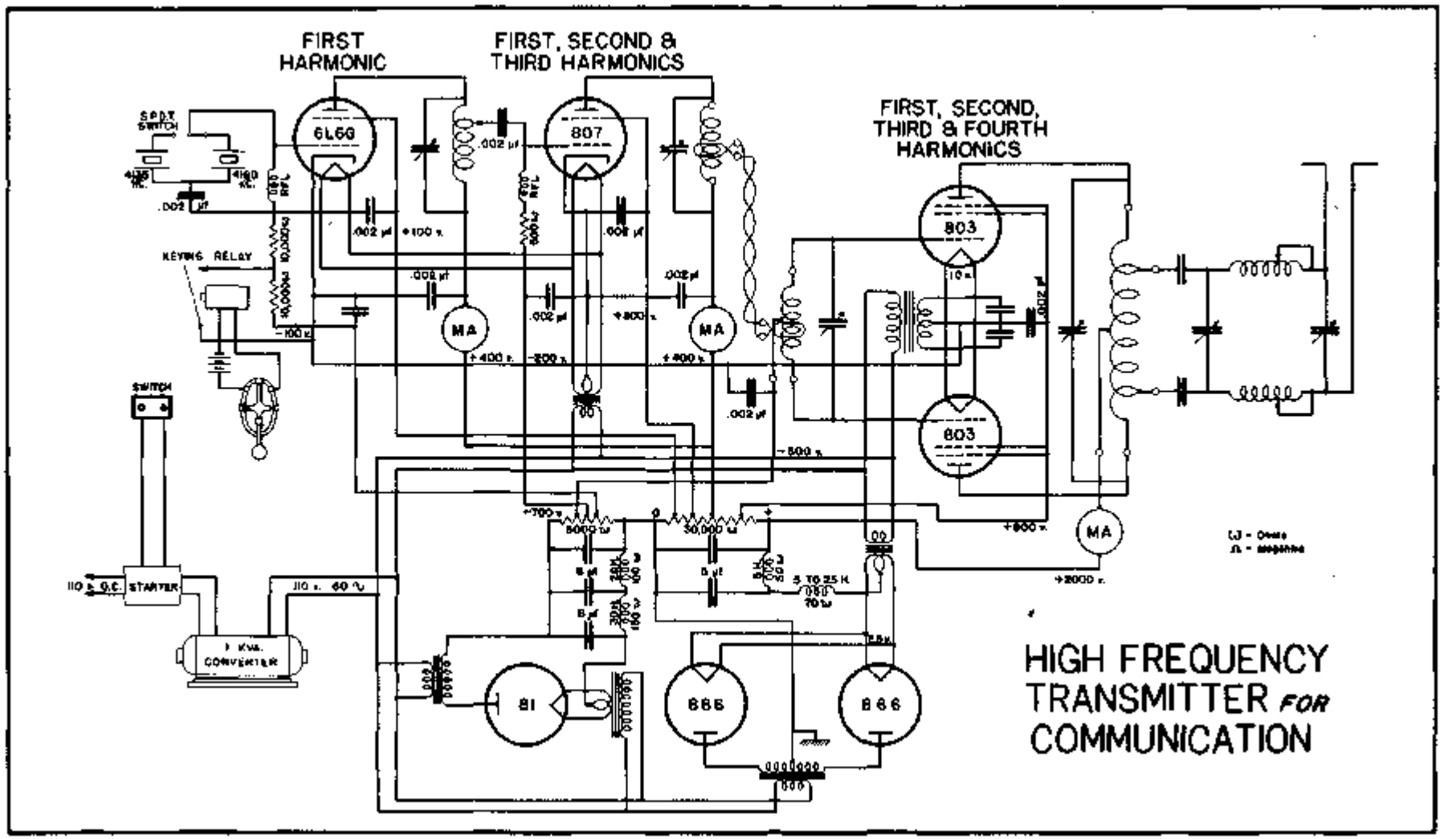
FIRST HARMONIC
FIRST, SECOND & THIRD HARMONICS
FIRST, SECOND, THIRD & FOURTH HARMONICS
6L6G
807
803
803
MA
MA
MA
KEYING RELAY
SWITCH
STARTER
1 KVA. CONVERTER
81
866
866
HIGH FREQUENCY TRANSMITTER FOR COMMUNICATION

Plate V

of laying heavy cable through the surf between the hydrophone and the shore station. I proposed this idea to Senior Chief Radio Operator Vincent in a letter in December 1931. My note book shows that Commander Borden asked me why it could not be used on the Atlantic coast also. My feeling at the time was that the radio signals would not be strong enough for more than about five miles. Anyway the sono-radio buoy is now a fact, amply proved by the results of the past two seasons.

Few readers who have gone this far would care to follow details of the circuits as it would be rather technical reading. Attention is invited to one item, however, so that credit may accrue to the Coast and Geodetic Survey. In the lower, left of Plate IV, labeled RADIO RECEIVER, is shown a variable crystal oscillator. I used this method of radio reception on the OCEANOGRAPHER during the summer of 1930 and it has been used continuously at radio station WSP since that time. The idea is to introduce a small amount of radio frequency voltage of nearly the same frequency as that being received, instead of using the beat frequency oscillator. Thus the crystal oscillator is much more constant and varying the amount of radio frequency voltage introduced helps keep down the effect of static and makes reception from the RAR stations and sono-radio buoys easier. The ships HYDROGRAPHER, LYDONIA and OCEANOGRAPHER have been using this system successfully during the past season. Like anything good, this has also been discovered by others and it is now on the market in some receivers. Its use will probably be extended to more of our equipment.

HYDROGRAPHIC CATAMARAN

H. Arnold Karo, Hydrographic and Geodetic Engineer, Commanding the Motor Vessel WESTDAHL, describes a method of sounding along the Juneau, Alaska, waterfront, in the following paragraph:

> "For the inshore sounding and the channel to north of the Douglas Bridge, a sounding barge or catamaran was constructed using both of the WESTDAHL'S dinghies. This arrangement proved to be surprisingly efficient and extremely stable and is recommended for parties having similar equipment. Snapshots of this sounding unit in operation are attached to this report."

The photographs show the two boats lashed together with 2" x 4"'s and the leadsman, helper, coxswain, and outboard motor in the starboard boat. The two observers, recorder, and plotting board are in the port boat.

A similar method was used by Lieutenant R. F. A. Studds in 1929 when surveying sloughs in the vicinity of Norfolk, Virginia. However, as these sloughs were narrow and signals were built on the banks, errors would have been introduced by separating the leadsman and observers. Accordingly, these three men were placed in the starboard boat and the recorder, coxswain and outboard motor in the port boat. Twelve-foot punts were used.

GEOGRAPHIC NAMES

G. H. Everett, Assistant Cartographic Engineer
U. S. Coast and Geodetic Survey

Geographic names are an integral part of a chart. Human beings, civilized or uncivilized, have always found it necessary to refer frequently to features of their environment. Civilized nations having a more varied interest in their environment make use of a greater number of named features. Geographic names begin with exploration, increase with settlement and multiply with development of a locality. The same principle applies to names on charts. One will find few charted names in areas of little importance and of scattered population but for areas of great importance, where population is dense, the charts will contain many names. The surveyor and the cartographer sensing the growing importance of an area will be alert to report and make use of additional names.

The first geographic names in any area are generally applied by explorers and early settlers. Subsequent names are those convenient to the local inhabitants and if well applied their use generally spreads until they become well established. This fact often provides interesting insights into the past history of a locality. Thousands of Dutch, Spanish and French names in this country reveal the languages of early colonial groups, and many names in well established usage today which appear prosaicly English have been corrupted from the original foreign names originally applied. In some cases the corruption occurred so long ago that students today can not agree on what the original derivation was. In areas in which names of foreign origin are known to exist surveyors will do well to look with suspicion on all names of apparent English origin. When we see Jack Bayou in the Mississippi Delta area we immediately conjecture whether this may not be Jacques Bayou.

Local usage, when it is well established, is the best and practically only authority for a name. Go To Hell Bayou may sound a bit crude, but if those who use it and those who live near it have never known it by any other name, then that is its name until the local people accept and use a different one. It is sometimes difficult, however, to ascertain whether or not the use of a name is well established. Judgement is necessary in determining the reliability of persons questioned about a name. Some persons may be newcomers in the locality and use names which are at variance with the well established ones. Others, because of possible self interests, may be indifferent about giving the correct information and may substitute other names for personal reasons. The problem of getting names in Florida Bay is well illustrated in a report from the surveyor which states: "The inhabitants of the keys known as 'The Conchs' are not very well educated. They are poor spellers and few know how to read charts. If the name of a feature was not known, rather than not give some answer, an informer would think up a name on the spur of the moment." It is interesting to note that the names reported for this project reflected the local interests. As spongers and fishermen these people were interested primarily in the water areas. Channels and banks had established names while several of the keys were unnamed locally; some had conflicting or duplicated names; and a few were grouped together under one name as one might refer to a general area. Very few features were named after individuals as contrasted with localities where land ownership is important.

The correct spelling of a geographic name must be ascertained. This is almost as important as knowing what the name is. Well established local usage can generally be accepted for the correct spelling of a new name although it must be accepted with reservations for names which have a historic background, particularly if the language of the present inhabitants differs from that of the original settlers. The spelling of new names is often settled authoritatively by their use in legal documents. The pronunciation of a new name, no matter how common it seems, can not be trusted as a guide to the spelling and this is particularly true for

family names; Reaves Point on the Cape Fear River is not Reeves Point; Jourdan River in Mississippi is not Jordan River and Centers Point in Maine is not Senters Point, in spite of the similarity in sound. San Nicolas Island in California is not San Nicholas in spite of our old friend Saint Nicholas. Possum Bluff on the St. Johns River is correct, a report from the surveyor warning "Possum is not spelled Opossum". Many common proper names may be correctly spelled in two or more ways, for example, Jouett and Jewett, Anderson and Andersen, Paynes and Paines.

The effect of local influence may be to extend the application of a name or to substitute another for it. The name Puget Sound originally applied only to that body of water south of the Narrows. As the early settlements spread northwards along the shores, the settlers referred to the unnamed body of water to the north as a part of Puget Sound. In a case of a fishing law violation, the courts decided that local usage had established the name Puget Sound to include all that body of water from the Strait of Juan de Fuca to Olympia. Keyser Island in Connecticut was named after the once owner of the island but because of the similarity in pronunciation with "Kaiser" was changed during the world war to Manrissa Island. The use of Keyser Island is slowly but surely returning because, established in 1852, it was too familiar to be replaced more than for a temporary period. Generally it is preferable that names once established be unaltered, especially if they are old names of historic significance. Most names, once established, do not change. But a few do and such information is of much value to the cartographer.

A geographic name is usually applied to some particular feature which has identity like an individual. If the feature should cease to exist, that name becomes meaningless and should be deleted from the charts. Cultural features such as wharfs, landings, and small settlements, particularly are apt to be temporary and when found to be non-existent that fact should be reported.

Conflicting names result from various causes. A good many may be traced back to careless spelling. There was a time when comparatively little attention was given to the spelling of names. In the seventeenth and eighteenth centuries during the settlement and development of this country spelling was very unsettled and capricious. One has only to examine the writings of those times to see even common words spelled several ways in the same paragraph. And even today the spelling of the names of some of the prominent citizens of that period is still in dispute because they themselves signed their own names variously to different documents. And since the spelling of English names was inconsistent one must not be surprized to find names of Indian origin with varied spelling. These were learned orally and when written had to be transcribed into European alphabets as well as possible. Thus, one finds on early maps the Potomac River spelled as: Potomack, Potowmack, Potomak and Patomack. One writer has compiled a list of 132 spellings of the name Winnipesaukee, a lake in New Hampshire.

A name may be in error on a map or chart because the name was incorrectly applied by the surveyor. Chimney Corner, a reference by fishermen to the entrance to a certain cove was an error when applied to the cove proper. The cove has the well established name of Indian Harbor. The name Cubbage Creek was misleading to the cartographer when the surveyor indicated it to include the lower part of a Lincoln Creek, of which it was only a tributary. Clark Point is the correct local name for the south point at the entrance to a creek but it was inked on one field sheet to indicate the north point. The Launch, a local name for the entrance to a bay, is a hydrographic feature. It was inked on a topographic survey in vertical letters indicating topographic feature and led one to assume that it applied to the landing at the entrance to the bay.

It is not uncommon for local inhabitants to use two or more names for the same feature. In such cases a selection must be made by the

cartographer. Certain principles are considered in deciding on the name to be charted which demand that a thorough investigation be made and all available data be submitted in the report on the names.

Information relative to the origin of a name should be reported whenever possible. Frequently individuals interested in the history of a locality inquire about the origin of a name on the charts. This information also helps in making a decision whether or not to chart the name pending further investigation. Two examples from field reports are given. One report submitting a name for the chart stated: "the point of land for the past few years has been called Bailey's Point. It had previously been called Horseneck Point. The name was apparently changed as the point became an exclusive residential section." This report did not give the origin of the name Bailey. Upon further inquiry it was learned that the name Bailey's Point was not well established, all of the replies to inquiries recommending the retention of Horseneck Point, and further that the new name recommended was after a living person and that his name was Bailly (not Bailey).

A report on geographic names in Florida stated, relative to a certain lake: "There are two names in local use for this lake. These are Lake Munroe and Mound Lake. Mound Lake is derived from the fact that there are Indian mounds near the north shore of the lake. Lake Munroe is named for Commodore Munroe of Coconut Grove, and so called by the sportsmen of that area. It is believed that the two names are about equal in local usage but that Lake Munroe has perhaps been in use the longer time and for this reason is recommended." Such information gives a basis for the proper selection.

All names on field surveys, whether previously charted or not, are investigated before acceptance. Statements made in field reports are considered important in this investigation. Information submitted should be complete and accurate. It is very likely that a charted name, selected from correct information will gradually preclude other local conflicting names. And conversely a decision based on meagre or erroneous information will probably cause an unnecessarily confusing situation because it will never be accepted by the local inhabitants. Government departments and other organizations use charts constantly as the authority for geographic names because the chart is based on actual surveys and is often of larger scale than any other existing maps of the locality. It is, therefore, essential that such information be as correct as is possible so that the chart may serve as a standard for correct geographic names.

BENCH MARKS

A Coast Survey engineer was being shown around town by a resident. Coming to the schoolhouse which stood on a rise, the citizen called attention to a mark painted near the top of the flagpole, saying that that was the bench mark marking the line to which high water rose during the flood of 1936.

"You don't mean that the water actually rose to that height" said the Coast Survey engineer.

"Oh, no!" replied the local resident, "it was very much lower then, but the boys used to shinny up the pole and erase it. So it was put up so high that they couldn't reach it."

SMALL SCALE SHEETS FOR FORM LINES

Henry E. Finnegan, Hydrographic and Geodetic Engineer
U. S. Coast and Geodetic Survey

Many conspicuous mountains, hills and ridges which border the shorelines of the more rugged coasts of the United States and Alaska lie beyond the limits of the standard ten or twenty thousand scale topographic sheets. These are often of more value to the navigator than the lower topographic features close to the shoreline, since the former are seen against the skyline and can be readily identified if charted.

During the ordinary topographic survey of the shoreline the topographer is frequently limited to cuts to unimportant points on the slopes of minor hills and ridges which rise abruptly from the shoreline. In an effort to supplement the plane table work with sextant cuts from offshore, it is often found that the desired features lie beyond the inshore limits of the sheet, or that the positions from which satisfactory cuts to such features must be obtained are beyond the offshore limits.

Sheets for form lines only, constructed on scales one-half to one-fourth that of the regular topographic sheets, usually can be laid out so that the limits will include all topographic features which are of greatest value to the navigator, and at the same time include the offshore area from which satisfactory cuts may be obtained. Several of these small scale form line sheets have been executed by field parties, where most of the cuts were obtained with a sextant from suitable positions offshore. Usually a few triangulation cuts to some of the more prominent peaks were available.

Two such sheets were completed in Alaska in 1932. They were done almost entirely from the Ship EXPLORER while cruising especially for the work. A third Alaskan sheet, accomplished in 1933, was done almost entirely from a launch of the party of the Ship EXPLORER. On each of these surveys considerable extra time was required to plot positions and cuts, scale distances and compute elevations. In 1935 a form line sheet on a scale of 1:60,000 was completed in the Philippine Islands, and with the exception of occasional triangulation cuts, all observations were taken with a sextant from the Ship FATHOMER. On this survey it was unnecessary

ANGLE RECORD BOOK
(Form Lines)

Letter Day A

Sheet No._____ Locality_____ Date_____

Time	Position Nos.	Position Angles			Cuts	*Vertical Angle		Height of Eye above water	Tide Ref. M.H.W.	Height of Eye Ref. M.H.W.	Height of Trees
hr. mi.			°	'		°	'	feet	feet	feet	feet
10 - 32	1	Cape Drew	36	25	Part - Thumb Pk.	6 -	52	22	- 4	18	60
		Part	57	10	24° - 32'						

* Vertical angle measured to waterline on shore at time of observation.

If the vertical angle is measured to the M.H.W. mark, correction for tide must be applied to the height of eye above water (column 3 in "Computation of Elevations Record")

to interrupt any of the regular field work, because cuts were taken and sketching was accomplished at the following times: while the ship was at anchor immediately before and after the day's work; while the ship was running to drop or pick up launch and shore parties; as the ship was leaving and approaching the working grounds; and as opportunity occurred at the time of regular fixes while the ship was running on sounding lines. Positions and cuts were plotted, distances scaled and elevations computed whenever time was available, principally while the ship was running to and from port.

COMPUTATION OF ELEVATIONS RECORD
(Form Lines)

Sheet No._____ Locality_____

1	2	3	4	5	6	7	8	9	10	11	12	13	14
Object	Position Nos.	Height of Eye Above water	Scaled distance to shoreline	Observed Vertical Angle	Correction to Vertical Angle	Corrected Vertical Angle	Scaled Horizontal Distance to Object	Computed Elevation	Curvature and Refraction Correction	Height of Eye above N.H.W.	Height of Tree	Elevation of Ground	Means
		feet	nmit. miles	° '	Minutes	° '	meters	feet	feet	feet	feet	feet	feet
Thumb Peak	1A	22	1.5	6 - 52	9	6 - 43	5974	2156	7	18	60	2119	
Lat.	20A	19	2.5	4 - 37	6	4 - 31	8305	2162	15	14	60	2121	
Long.	17C	18	2.0	5 - 17	6	5 - 11	7250	2152	12	13	60	2117	2119

Values in columns--- 1, 2, 3, 5, 11 & 12 obtained from Angle Record Book.
" " " 4 & 8 obtained from form line sheet.
" " " 6 & 10 obtained from tables 7 & 4, respectively, Topographic Manual, Special Publication No. 144
" " " 9 from Hypsograph, or table 3, Special Publication No. 144, using values in columns 7 & 8
" " " 13 derived from columns 9, 10, 11 & 12.

Since favorable results have been obtained on a number of these small scale form line surveys, it appears probable that a more general use of the method will be made by parties on combined operations. A few brief remarks and suggestions regarding the general procedure employed in executing the sheets mentioned above may be of interest.

General Procedure

A rough sketch of a section of the terrain along the coast was made in the Angle Record Book. All points of particular prominence were given distinctive names. Other points selected for locating were referred to those which had been named. Where the trends of the main ridges were approximately parallel with the coast line, sections of the terrain were divided into three parts, i.e., skyline points, middle foreground points, and foreground points. The most prominent point on a skyline ridge was given a distinctive name such as Thumb Peak, then the other points were numbered 1, 2, 3, etc., and when cut-in, were recorded as Thumb Ridge-1, Thumb Ridge-2, etc. Points about half way between Thumb Ridge and the shore, having been numbered 1, 2, etc., were recorded as Thumb Mid-1, Thumb Mid-2, etc. Likewise, points close to the shore line were referred to as Thumb Fore-1, Thumb Fore-2, etc.

If possible the skyline points of a section were cut in first, then the middle foreground and finally the foreground points. Of course this order of procedure was varied at times, depending on the visibility.

Very little plotting was done at the time the cuts were taken, because the observer tried to obtain as many cuts as possible during each trip along a section of coast line and watched carefully the relative positions and appearance of the various features, so that cuts to the same points could be made as required. Usually in the Philippines it was necessary for the observer to take up other work immediately after obtaining a great many cuts. By following a definite system of identification of points as noted above, the officer, when plotting at a later date, could readily recall most of the features, and at the same time know approximately where to draw the intersection lines, thus avoiding the confusion on the sheet caused by numerous unnecessarily long lines.

Should this method of form lining be used to any extent it would probably be advisable to file the record books, in which case the records could be prepared easily for future reference for checking the source of an elevation, as follows: Scale and record the latitude and longitude of each point as the elevation is plotted. Then prepare an index in the computation record giving the latitude, longitude, elevation and computation numbers.

MANUAL FOR LIFEBOATMEN AND ABLE SEAMEN

One of the concrete results of the very complete inquiry into the MORRO CASTLE and MOHAWK disasters was the passage by the 74th Congress, on June 25, 1936, of Public Law No. 808. This act, sometimes known as the personnel bill, provided for the cancellation of all existing lifeboatmen and able seamen certificates and for the issue of a new series of certificates. Under the authority vested in the act, the Secretary of Commerce has established RULES AND REGULATIONS FOR ISSUANCE OF THE CERTIFICATES OF SERVICE AND EFFICIENCY, CONTINUOUS DISCHARGE BOOKS, CERTIFICATES OF IDENTIFICATION, AND CERTIFICATES OF DISCHARGE. Copies of the pamphlet describing these are available for distribution under this title.

The Bureau of Marine Inspection and Navigation has recently issued a MANUAL FOR LIFEBOATMEN AND ABLE SEAMEN. Part I of the manual states the requirements to be met prior to examination for a certificate of efficiency of lifeboatman and for certificate of service as able seaman. It also states the nature of the examinations themselves. Part II concerns lifeboatmen. In it are described lifeboats, life rafts, davits, and releasing gear, and there are listed equipment required by law on lifeboats and all buoyant apparatus on vessels in different services. A series of questions and answers and information of interest to lifeboatmen is included. Part III concerns able seamen. In this small pamphlet a complete treatise on seamanship is not possible, but this section covers certain phases of seamanship which are important.

Officers of Coast and Geodetic Survey ships will find this manual of special interest since the training of new members of the crew is an important feature at the beginning of each field season. The introduction to the manual states that "it is written with the hope that it may be of assistance to the men employed in the merchant marine of the United States in becoming better lifeboatmen and better seamen." Experienced lifeboatmen and seamen are essential in the service, since the handling of small boats is continually necessary in so many of the operations of hydrographic surveys. The officers closely supervise the members of the crew in these tasks and should take an especial interest in their training and development.

PACIFIC COAST CARTOGRAPHY

THE CARTOGRAPHY OF THE NORTHWEST COAST OF AMERICA TO THE YEAR 1800 by Henry R. Wagner has just been published by the University of California Press, Berkeley, California. One who is interested in the early exploration and map history of this region should not fail to consult this thorough and authoritative work. The author considers the northwest coast of America to include all those shores of America bordering on the Pacific Ocean from the southern cape of Lower California to the westernmost of the Aleutian Islands; and his history of the exploration and cartography of this area embraces the entire period from the earliest map, depicting an imaginary shoreline, to the year 1800 or just after George Vancouver with his thorough explorations had put the last of this area on the map very much as we see it today.

Mr. Wagner concerns himself principally with the evolution of the cartography, the basis for the cartographic changes, and the geographic names of the area. That he is an authority on his subject none will deny who is familiar with his many previous articles and books. And one can well understand from the thoroughness with which the subject has been treated that this work has been eight years in preparation.

All of the important known maps which have cartographic value, in so far as this area is concerned, are described in considerable detail; and about forty of the most important of these are reproduced, mostly on a much larger scale than is customary in similar publications. The first volume contains the short histories and discussions of the various explorations, interestingly combined with comparisons in detail of the cartography appearing on the different maps, globes and charts. We were interested in and appreciate the author's comment that "Of all the writers (on this subject) I have laid under contribution, Dr. J. G. Kohl and Dr. George Davidson* are the only ones who have given the subject more than passing attention". But apparently the author was not familiar with Dr. Kohl's "History of discovery and exploration on the Pacific Coast of the United States" published in the 1884 annual report of the Superintendent of the U. S. Coast and Geodetic Survey, since it is not listed in his bibliography.

The second volume is essentially for reference. It contains a chronological list of maps, atlases and globes with a short description of each, where copies now exist or may be found in reproductions and in what publications longer descriptions have been published. The origin of place names, existing and obsolete, occupies a large part of this volume. While it is to be regretted that the history given for any one name is quite brief, the number of important names in the area is so large that the inclusion of even a few lines about each was a vast task. The volume is concluded with an exhaustive bibliography.

* Most readers will be familiar with George Davidson's many years' service in the U. S. Coast Survey from 1845 to 1895; but probably few know that Dr. J. G. Kohl, a German historian of note, made his famous map collections (now in the Library of Congress), and wrote his manuscripts on exploration of the United States coasts and the origin of the principal geographic names while collaborating with the Coast Survey from 1854 to 1856.

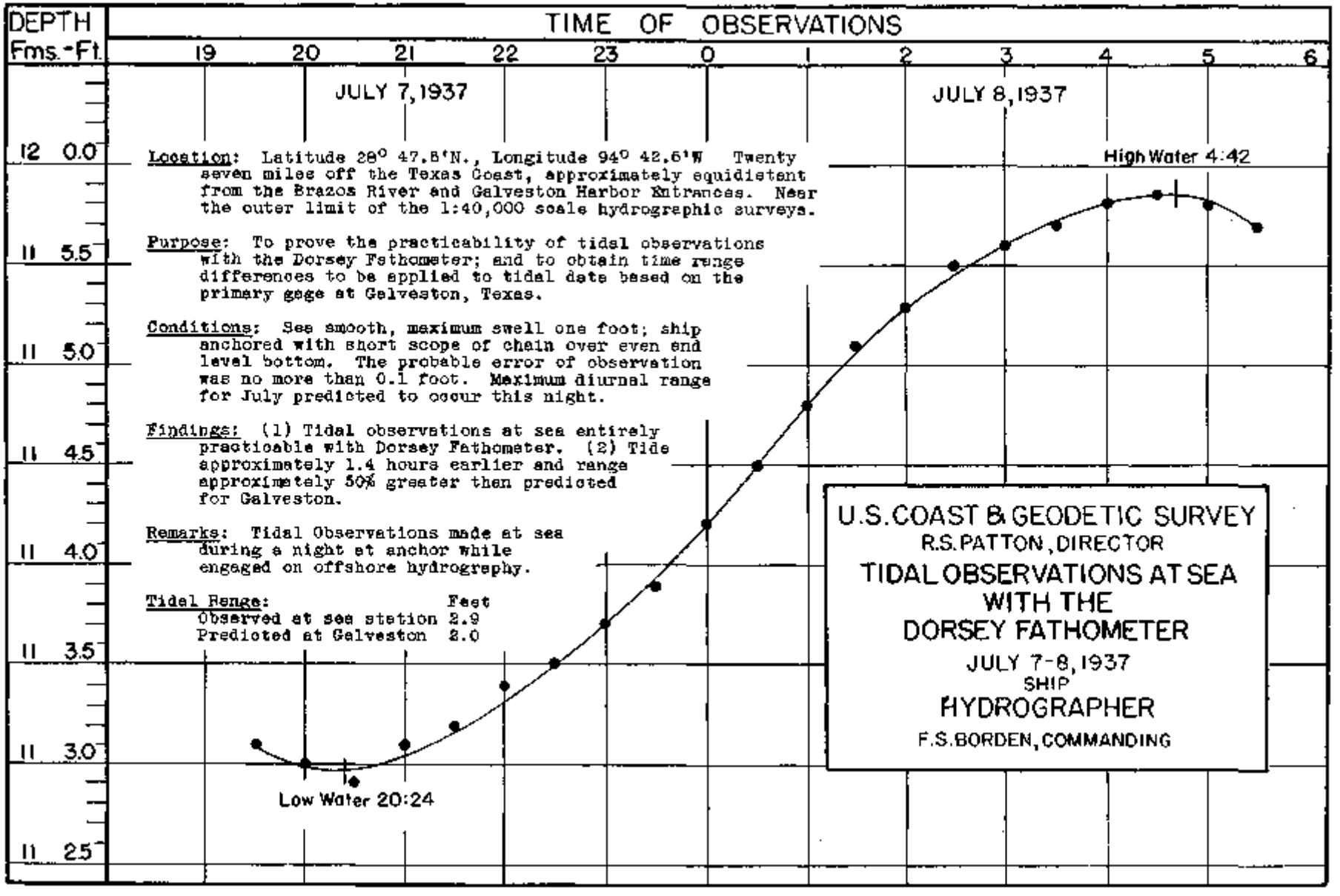
DEPTH
Fms.-Ft.
TIME OF OBSERVATIONS
19
20
21
22
23
0
1
2
3
4
5
6
JULY 7, 1937
JULY 8, 1937
12 0.0
11 5.5
11 5.0
11 4.5
11 4.0
11 3.5
11 3.0
11 2.5
High Water 4:42
Low Water 20:24
Location: Latitude 28° 47.8'N., Longitude 94° 42.6'W Twenty seven miles off the Texas Coast, approximately equidistant from the Brazos River and Galveston Harbor Entrances. Near the outer limit of the 1:40,000 scale hydrographic surveys.
Purpose: To prove the practicability of tidal observations with the Dorsey Fathometer; and to obtain time range differences to be applied to tidal data based on the primary gage at Galveston, Texas.
Conditions: Sea smooth, maximum swell one foot; ship anchored with short scope of chain over even and level bottom. The probable error of observation was no more than 0.1 foot. Maximum diurnal range for July predicted to occur this night.
Findings: (1) Tidal observations at sea entirely practicable with Dorsey Fathometer. (2) Tide approximately 1.4 hours earlier and range approximately 50% greater than predicted for Galveston.
Remarks: Tidal Observations made at sea during a night at anchor while engaged on offshore hydrography.
Tidal Range: Feet
Observed at sea station 2.9
Predicted at Galveston 2.0
U.S. COAST & GEODETIC SURVEY
R.S. PATTON, DIRECTOR
TIDAL OBSERVATIONS AT SEA WITH THE DORSEY FATHOMETER
JULY 7-8, 1937
SHIP
HYDROGRAPHER
F.S. BORDEN, COMMANDING

HORSES, HYDROGRAPHERS, AND HYPSOGRAPHY

John Bowie, Jr., Jr. Hydrographio and Geodetic Engineer
U. S. Coast and Geodetic Survey

Administrative officers, long experienced in studying estimates of the various field parties engaged in hydrographic work, were somewhat surprised to see in an estimate submitted "by Lieutenant Commander R. L. Schoppe, U. S. C. & G. S., Commanding Ship DISCOVERER, preparatory to his past season's work in the Aleutian Islands, Alaska, the following items:

1 Riveter, tubular
4 cinches, pack saddle type
4 cinches for riding saddles
2 cowbells, small size
4 saddle blankets
1 horseshoe hammer
1 horse rasp, plain
1 horseshoeing pincers
1 hoof knife
1 pair bridle reins
2 pack saddles, complete

The following article by Lieutenant John Bowie, Jr., describing the experiences of the party using horses on Unimak Island during the summer of 1937, will make it clear why this estimate was justified:

"Believe it or not, but Bid No. 70, specified four pack horses, sound in limb and back, to be delivered to the Commanding Officer, U. S. C. & G. S. Ship DISCOVERER, Seattle, Washington, for reshipment to False Pass, Alaska, where the horses were to be used on Unimak Island in conjunction with the hydrographio and topographic operations for the 1937 field season.

When the bids were opened early in April, 1937, it was found that a rancher at Sunnyside, Washington was low bidder, and arrangements were made for the Alaska Steamship Company to ship the horses to False Pass, Alaska. Accordingly four small but wiry range horses were put on the S. S. LAKINA about April 15th, with four tons of hay and one ton of oats for feed en route and on the island until the grass and vegetation could attain sufficient growth to feed the horses. They arrived at False Pass April 25th in good condition, having consumed one ton of hay and a small portion of the oats en route.

Two experienced horse wranglers were hired to take care of the animals and to do the packing. When the ship arrived at False Pass the horses were found to be in excellent condition, frisky, but gentle and sleek, and each having gained about 50 pounds in weight.

The horses were used first at Cape Lutke, where a triangulation unit and a topographic unit located a camp for a base of operations from which to map the shore line of Unimak Island from Cape Lutke to Cape Sarichef, via Scotch Cap. Two horses were used by the triangulation unit and two by the topographic unit. The horses packed all instruments, equipment, and supplies used during the daily work of each unit. Such articles as lumber, kegs of lime, tripods, and theodolites, were handled with ease by the horses, saving the men on the party much physical labor as the areas on each side of camp for six or seven miles were covered on foot.

Not only were the horses a valuable help to the camp parties, but to the Commanding Officer of the DISCOVERER as well, for due to the exposed nature of the southwest shore of the island, landings could not be made with small boats except at times when ground swells of the North Pacific Ocean were small. Such days were few and far between, the surf being such that most of the time breakers would swamp any small boat making a landing, especially if the boat was heavily loaded with supplies. Thus the horses, packing the entire equipment and supplies when camp was moved, saved the

ship many working days each month; The first time camp was moved, it took four round trips by all the horses to complete the move. This consisted of carrying the tents, cots, bed rolls, and personal belongings of nine men, provisions for three weeks, stoves, instruments, tools and equipment. Camp was moved on the average every two to three weeks. The horses proved to be well broken in as pack animals and were handled very satisfactorily by the wranglers.

At the end of the field season, the horses were returned to False Pass where they will winter and be available for the 1958 season. A shed was built for protection against winds and storms. Feed for the winter has been sent to False Pass and the boat watchman will take care of the feeding. The horses thrived on the native grass and vegetation which grows along the beach. They like even the dry grass, so that little hay and oats will be required during the winter except at such times as the ground is covered with snow.

This was probably the first time a Coast and Geodetic Survey ship has taken horses to Alaska for use in the regular ship work. When the idea was first considered their usefulness was questioned by some of the officers experienced in survey work in this region and the officers on the DISCOVERER were the target for some good natured wise-cracking. However the judgment of the Commanding Officer and others advocating the innovation proved to be well founded, for the horses were a big aid in the work on Unimak Island and without them, neither the camp parties nor the ship party could have made the excellent progress they accomplished, without additional personnel and much hard work.

The horses were also a source of general conversation and amusement on our own ship. A couple of incidents that follow are good examples. Most of the natives, as well as some of the white men at False Pass, had never seen a horse. One of them wanted a ride. A horse was saddled, the native was assisted into the saddle and rode proudly about a half mile down the beach. When he wanted to come back he could not get the horse to turn around. He got off to turn the animal around by leading him and then he could not get back in the saddle, so he had to lead the horse back.

The other incident is the story of the horse shoe nails. Toward the end of the season, the head wrangler reported that he would need some horseshoe nails to shoe the horses, before starting their 100-mile trek back to False Pass. Shoes were continually getting loose and coming off, due to the lava beds and general rocky land which had to be crossed during our daily work. The Commanding Officer wired the Inspector, Seattle Field Station, to send up a box of horseshoe nails. It is not known how much the clerk at the Field Station had to do with the purchase, but when the nails finally arrived, instead of a small box, we received an entire gross, in two five-pound boxes. When supplies for the camp were being landed from the ship we requested that a few nails be included to tack on two loose shoes. The Commanding Officer relayed the request to the Executive Officer, who, wanting to be sure to send enough nails, told one of the seamen to take in two pounds. The seaman, not knowing how much horseshoe nails weighed, thought he would play safe too, so he sent in both five-pound packages. The story doesn't end here for the seaman in the small boat, taking the nails ashore, wanting to play a little baseball, tied both five-pound boxes together and heaved them in the direction of the outstretched hands of one of the wranglers who was on the beach. The seaman either underestimated the distance to the beach or overestimated his throwing ability, for the toss was short, the package fell in the water and was lost, The story doesn't end here either for when the loss was reported to the Executive Officer, he told the seaman to take in another two pounds and was dumbfounded when he was informed that all the nails had been sent in the first time. As it had become dark, nothing could be done about it then. But a thing like this bothered our Executive Officer, so after a restless night, he decided to break out a boat at dawn, go ashore and find some of the nails, thus saving

the situation. He returned empty handed without sighting a single nail. Someone, out of curiosity, got a Tide Table to see what the stage was at the time the nails were lost. It was then learned that they had been lost exactly at low tide, on one of the lowest minus tides in 1937 at Unimak Island. There were numerous other incidents, most of which were amusing and all of a minor nature.

The first plan for field operations with the horses, was to locate a camp in the vicinity of Cape Lazaref and execute the topography and triangulation westward to Cape Sarichef via Cape Lutke and Scotch Cap. After giving the project some study, the Commanding Officer decided that this plan covered a little too much ground to be completed in one season, so the first camp was established at Cape Lutke, since the area between there and Cape Sarichef was considered of more importance and should be given preference over the area between Cape Lutke and Cape Lazaref.

To take the horses from False Pass to Cape Lutke, a map showing an old trappers' trail and as much local information as could be obtained was given the two wranglers for their guidance. It took them four days to make the 60-mile trip. The outfitting department of the ship furnished the wranglers a Swede stove and a five gallon can of kerosene for cooking purposes. At camp on the first night out, the Swede stove could not be persuaded to function, so a scanty meal was prepared by burning kerosene and such grass and roots as could be obtained, there being no trees nor brush on Unimak Island. The next morning the sloshing of the partly filled kerosene can caused one of the horses to cut up while being packed, with the result that the five gallon can was demolished and all the kerosene spilled. Thereafter, the wranglers became real horse marines, subsisting on cold pork and beans.

During the course of the work, the horses bogged down a number of times when they got into soft ground while crossing streams and swampy areas. None of them was injured nor any of the equipment damaged, due to the expert handling by the wranglers. The glacial streams were quite treacherous, for one might be a foot deep in the early morning and become a raging torrent in the afternoon, when the sun came out hot enough to melt the snow and ice on the high peaks and glaciers, the runoff being fast, due to the steep slopes of the terrain. It was found that the morning was the best time to cross the glacial streams.

The work was completed from Cape Lutke to Cape Sarichef August 13th. En route back to False Pass, the two wranglers with Lieutenant LeFever in charge, built signals on the 40-mile stretch of beach between Cape Lutke and Cape Lazaref which will be used to enable the topographic and launch hydrographic parties to get off to a flying start at the beginning of the 1938 season. The horses arrived at Cape Lazaref in time to enable Ensign Seaborg to complete the topography between Cape Lazaref and Cape Aksit, just before the close of the season.

THE WRECK OF THE COAST SURVEY BRIG WASHINGTON

Sequel

The historical event described in the December 1936 volume of the Bulletin by Commander R. R. Lukens, under the above title, has been favorably commented on by several readers. One of these called attention to the fact that Commander Lukens did not mention that a medal had been struck commemorating this disaster. We find that medals of silver were struck for presentation by the Treasury Department "to the surviving officers and crew of the Coast Survey Brig WASHINGTON, commemorative of the loss of Lieutenant George M. Bache, United States Navy, Commander, and ten of the crew of that brig, who perished while in the performance of their duties, in a hurricane encountered off the coast of North Carolina, on the 8th of September, 1846".

The medal on the reverse contains the legend "For gallantry and humanity, Dec., 1846," surrounded by a wreath formed of laurel branches. The obverse contains the legend "The Treasury Department of the United States, Coast Survey to - - - - - -", (a blank for the name of the recipient). One of these medals may be found today in the medal collection of the Library of Congress.

The Secretary of the Treasury, commenting on the conduct of Lieutenant Commanding George M. Bache in this instance, said in part, "He did all that nautical skill, coolness, and courage could accomplish, and it is certain that the safety of the vessel, and of the surviving officers and crew, is due, under Providence, to the last order which he gave, and which was in process of execution when he was swept by the sea from the deck of the vessel. He perished in the discharge of his duty, and his last act, which placed him in a position that occasioned his loss, secured the safety of the vessel and that of the surviving officers and crew."

"PLACED END TO END - - ?"

Of the many inquiries received by the Bureau, there is an occasional outstanding request which really fires the imagination. Here is one for the current year.

"Gentlemen:

I want for my work the number of feet depth for at least every square mile of ocean surface. Please designate location of each depth by longitude and latitude. I would be pleased to have soundings for all inland seas, gulfs, etc., that is, all land which is covered by water all over the world. . . .

P. S. I do not require depths of rivers or lakes."

Let us suppose for the moment that data are available to fill this modest order. If the answer could be typed on letter size paper of standard weight, averaging 230 sheets to the inch, and the typing single spaced, with each depth and its corresponding position on a single line across the page, it would permit the tabulations of 50 depths to a sheet. Since the water area of the world is, in round numbers, 140,000,000 square miles, the required tabulation can be crowded on to 2,800,000 sheets.

The slide rule furnishes some rather startling facts relative to this sizable paper requirement: Stacked in a single column, its 1,014 foot height would dwarf the Washington Monument by 459 feet. The cost of the paper alone would exceed $2000, and its weight of 15 tons certainly would irk the postman delivering the reply. At a rate of 1000 depths per day, 383 1/2 years would be required to scale and tabulate the data.

TRIANGULATION, UNIMAK ISLAND)

Extracts from 1937 Season's Report of Ray L. Sohoppe,
Hydrographic and Geodetic Engineer
Commanding Officer, U. S. Coast and Geodetic Survey
Ship DISCOVERER

* * * * * * * * * * * *

"Geodetic positions were determined for twenty-seven new stations, most of them located along the beach at 2 to 3 mile intervals. The best weather was encountered during June and August. July was very foggy. As a number of stations were located on hills around 1000 ft. in elevation, low clouds and drifting fog covered the tops 90% of the time day after day. By using a direction theodolite, stations were completed when it would have been impossible to have enough time to do so with a repeater. This is the second year this type theodolite has been used on this ship and in view of its very successful performance, it is strongly recommended that similar second order theodolites be available for all parties working in Alaska, and all other places where good weather is limited and speed as well as accuracy is essential."

* * * * * * * * * * * *

"The triangulation and topography units worked in close cooperation, lending men and assistance to each other when it was in the interest of the progress of the combined party to do so. Much data on the locations of peaks, elevations, and form lines was obtained by the triangulation unit. This was used constantly by the topography unit, because limited visibility due to working along the foot of bluffs, and the presence of low clouds and fog might have required the topography unit to retrace their steps in order to obtain all details necessary to complete the sheet. Likewise, the topography unit worked at triangulation and signal building at such times as the progress of both units and the state of the weather made it advisable to do so.

The camp kept in daily communication with the ship by means of a sending and receiving radio-phone. This method of contact proved very effective in reporting daily progress to the Commanding Officer, reporting weather conditions, status of food supply, the health of the personnel in the camp party, etc. The health factor is very important because of the isolated area in which the units operated. It is with considerable pride that we are able to report that not a single man on the entire camp party was incapacitated for even a portion of a day. This is in line with the remarkable record of the ship, which returned to Seattle with the same personnel as when she left, not having a major or minor casualty the entire season.

While working in the vicinity of Scotch Cap and Cape Sarichef, both units lived in one of the dwelling houses of the U. S. Lighthouse Service. Permission was obtained from the Superintendent of the 16th Lighthouse District before doing so. The keepers were eager to cooperate in every way possible, and the hospitality encountered was one of the high spots of the season. At such isolated stations, the companionship of our Officers and men was most welcome to the keepers."

A NOTE ON THE PORCINE EFFECTS OF THE TIDE IN THE BAY OF FUNDY

The greatest known rise and fall of the tide occurs in the upper reaches of the Bay of Fundy, where ranges of forty feet or more are not uncommon. In such tides a rise or fall of ten feet or more in a single hour occurs frequently, and the two stories related below are cited as effects of these large tides. They are fish and pig stories, the reader being free to choose which of these adjectives to emphasize.

When the tide recedes, it does so rapidly, and fish are left stranded on the wide stretches of mud flats left bare. The pigs in the region descend to these mud flats and eagerly feed on these fish. But before descending to feed, they leave one of their number stationed on a high bluff looking toward the sea. On the approach of the rapid rise of water, this sentry squeals a warning to the herd feeding below, which gives them sufficient time to scamper to safety up the bluff.

The second story is told by local residents to emphasize the superior quality of the bacon produced in the Bay of Fundy region. As is well known, the best bacon is that composed of alternate layers of fat and lean meat. At low water the pigs feeding on the stranded fish put on a layer of fat. On the rapid return of the rise of the tide the pigs must run like wild-fire to escape, and the effort produces the layer of lean; hence alternate layers of fat and lean meat.

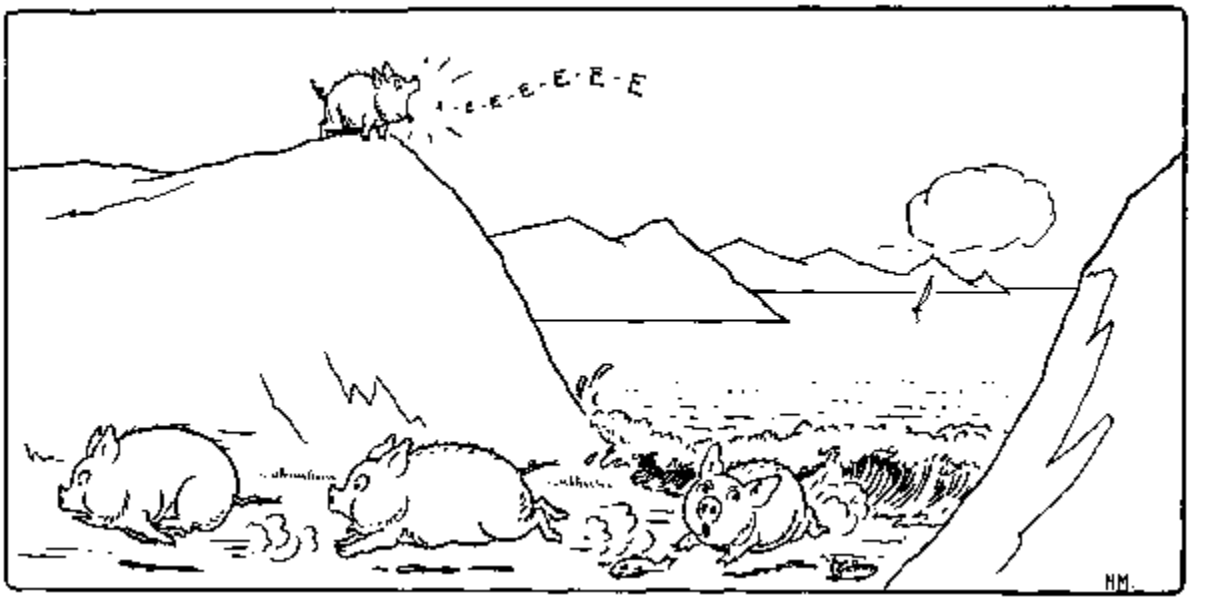

COAST AND GEODETIC SURVEY, DIVISION OF HYDROGRAPHY AND TOPOGRAPHY - PROJECTS UNDERWAY, COMPLETED, AND PROPOSED
(All projects reported below have been started since 1927)
November 1, 1937.

STATE	LOCALITY	CLASS OF SURVEY: Triangulation Order 1st	2nd	3rd	Hyd.	Aer. Top.	Other Top.	SCALE		AREA SQ. MI.	STATUS OF THE SURVEY
Maine	Portland to Machias.		√							6,000	Completed
	Machias to Eastport.		√							900	Postponed
Massachusetts	Cape Cod, Provincetown to Pamet River.		√	√	√		√	1:10,000	1:20,000	50	Completed
	Pamet River to Monomoy Pt.		√	√	√		√	1:10,000	1:20,000	200	Postponed
	Monomoy Pt. to Woods Hole.				√		√	1:10,000	1:20,000	300	Proposed
Connecticut	Wakefield to Housatonic River.		√	√	√	√	√	1:10,000	1:20,000	450	Postponed
	Housatonic River to New York.		√	√	√	√	√	1:10,000	1:20,000	300	Completed
Conn., R.I., & Mass.	Buzzards Bay to Wakefield.		√	√	√	√	√	1:10,000	1:20,000	400	Proposed
N.Y. & N.J.	Sandy Hook to Cape May.		√	√	√	√	√	1:10,000	1:20,000	1,450	In Progress
Maryland	Chesapeake Bay, Delaware and Chesapeake Canal.		√	√	√	√	√	1:10,000		2,000	In Progress
Md. & Va.	Offshore hydrographic surveys to the 75rd meridian including shore control.		√	√	√		√	1:10,000 1:40,000	1:20,000 1:120,000	15,200	Completed
Va. and N.C.	Inside Route Chesapeake and Albemarle Canal to Adams Creek.		√	√	√	√	√	1:10,000		680	Completed
N.C., S.C., Ga., Fla.	Wilmington, N.C., to Jacksonville, Florida.		√	√	√	√	√	1:10,000	1:20,000	2,860	Completed
Florida	St. Johns River to Sanford.		√	√	√	√	√	1:10,000	1:20,000	340	In Progress
	Biscayne Bay to Key West.		√	√	√	√	√	1:10,000	1:20,000	1,750	In Progress
Florida	Indian River.		√							200	Proposed
Atlantic Coast	Nantucket to Delaware River Entrance, offshore hydrography.				√	√	√	1:20,000 1:120,000	1:40,000	30,000	In Progress
" "	Gulf of Maine offshore hydrography.				√		√	1:20,000 1:120,000	1:40,000	28,800	Proposed
" "	Chesapeake Bay to Cape Lookout offshore hydrography.				√		√	1:40,000	1:120,000	16,000	Proposed
Fla. & Ala.	Apalachicola to Mobile.		√	√	√	√	√	1:10,000	1:20,000	2,700	In Progress
Louisiana & Texas	Miss. R. to Galveston Pass offshore hydrography to 100 fm. curve and shore control.		√	√	√		√	1:10,000 1:40,000	1:20,000 1:80,000	26,300	Completed
Louisiana & Texas	91st meridian to Galveston, Tex.		√	√			√	1:10,000	1:20,000	4,800	Completed
Texas	Galveston to Corpus Christi.		√	√	√	√	√	1:10,000	1:20,000	2,250	Completed
Gulf of Mexico	Florida Keys to Miss. R. Delta offshore hydrography.				√			1:20,000 1:120,000	1:40,000	64,000	Proposed
	Heald Bank to Rio Grande.				√			1:20,000	1:40,000	21,600	In Progress
California	Mexican Border - San Francisco Bay incl. offshore hydrography to 2000 fm. curve		√	√	√	√	√	1:10,000 1:120,000	1:20,000	56,770	Completed
	Sacramento and San Joaquin Rivers.		√	√	√	√	√	1:10,000		900	Completed
Washington	Puget Sound.	√	√	√	√		√	1:10,000	1:20,000	3,200	Completed
Washington	Puget Sound, Apple Cove Point to Canadian Boundary.		√	√	√	√	√	1:10,000 1:40,000	1:20,000	1,500	Proposed
Pacific Coast	San Francisco to Shelter Cove.				√			1:20,000 1:120,000	1:40,000	14,200	Completed
" "	Shelter Cove to Trinidad Head.				√			1:20,000 1:120,000	1:40,000	6,400	In Progress
" "	Columbia River.		√	√	√	√	√	1:5,000	1:10,000	800	In Progress
" "	Pacific Coast wire drag surveys Santa Barbara Islands to Columbia R.							1:10,000	1:20,000	1,500	In Progress
Alaska	Southeast (unsurveyed areas).		√	√	√		√	1:10,000	1:20,000	4,000	In Progress
"	Gulf of Alaska, deep sea hydrography.				√			1:500,000		360,000	In Progress
"	Aleutian Islands including offshore hydrography.		√	√	√		√	1:5,000 1:20,000 1:120,000	1:10,000 1:80,000	72,000	In Progress
"	Kodiak Island to Unimak		√	√	√		√	1:10,000 1:40,000	1:20,000 1:80,000	26,000	In Progress
Hawaiian Islands.	Hawaii Is. to Hure Is., T.H. including deep sea hydrography.		√	√	√		√	1:10,000	1:500,000	600,000	Postponed
Philippine Islands.	Northeast Luzon.		√	√	√		√	1:10,000	1:80,000	18,800	Completed
	Balabac Island.		√	√	√		√	1:20,000	1:40,000	2,500	Completed
	Southwest Sulu Sea.		√	√	√		√	1:80,000		6,400	Proposed
	Palawan Island, West Coast.		√	√	√		√	1:20,000	1:80,000	12,000	In Progress

All the above is field work; results to be published on standard charts of the Coast and Geodetic Survey. Copies of standard sheets on scales shown will be available.

STATISTICS AND DISTRIBUTION OF FIELD PARTIES
U. S. COAST AND GEODETIC SURVEY - DIVISION OF HYDROGRAPHY AND TOPOGRAPHY
July 1, 1936 - June 30, 1937

Locality	Project H.T.Nos.	Ship or Party No.	Chief of Party	Hydrography				Topography		Triangulation			Tides & Cur.			Mag. No. Obs.
				Miles	Square Miles	Miles H.D.	Soundings	Mi. of Shore	Area sq. mi.	Area sq. mi.	Area sq. mi.	Pos.	Ti. Sta.	Cu. Sta.	Gam Mat.	
Conn. Coast	150	18	T. B. Reed					95.0	57.5							
Approaches to N.Y. Harbor	807	DC.	H. A. Baron	5,094	3,826		32,706							8		
Approaches to N.Y. Harbor	807	17.	Jack Santer	8,357	3,048		91,345									
Approaches to N.Y. Harbor	807	91.	H. D. Horns											30		
Vicinity of N.Y. City	176	33	J.S.Partington					196.0	67.6							
N.J. Inland Waterway	805	21	E. H. Kirsch					394.0	170.0							
N.J. Inland Waterway	805	81.	L. D. Graham	3,860	92		115,392						17		48	
Vicinity of Norfolk,Va.	197	18	S. W. Grenell					86.7	23.7							
Entrance Cape Fear R.,N.C.		Special	R. F. Tyson			34										
St. Johns R., Fla.	212	81.	L. D. Graham	1,164	85		38,143						6		15	18
St. Johns R., Fla.	168	36	H. A. Paton					548.0	18.0			1				
Fla. Keys	158	14	E. R. McCarthy	1,355	116		50,438	909.4	313.4	5	40	7	16		3	4
La. & Texas Coasts	210-214	81.	F. S. Borden	12,989	7,369		135,886	31.0	11.0	17	136	17	3		3	
Coast of So. Cal.	157	71.	R.H.Campbell	8,058	11,616		45,158	11.0	5.6			3	1	3		13
Coast of Northern Cal.	206	30.	F. H. Hardy	1,504	269	308	12,724	19.4	7.6				8			4
Columbia R., Ore. - Wn.	801	9	S. W. Knox	1,075	41		43,783	163.0	8.0	81	38	127	11		12	
Puget Sound, Wn.	171	5K.	G. C. Jones	1,041	38		43,861	194.8	82.9	38	15	97	9		6	9
SE Alaska - Sumner St.	311	5K.	G. C. Jones	240	20		4,354	67.0	7.0	10	100	18	2		5	4
SE Alaska - Sumner St.	211	5E.	H. A. Kero							25	94	31				
SE Alaska - Fin. Jones	809	5E.	H. A. Kero	68	1		4,336	0.1		86	100	27				
SE Alaska - Tahu Inlet	413	5E.	H. A. Kero	587	37		88,918	55.4	110.0	8	19	10	8		6	
Aleutian Isl. Alaska	176	8U.	A.M.Sobiepalski	2,360	2,301		70,096	380.0	361.9	173	365	113	0	1	18	13
Aleutian Isl. Alaska	206	9I.	R. L. Schoppe	4,344	1,387		50,939	128.1	151.0	135	3,350	123	4		8	13
Small jobs by Liaison Officers & Inspectors of Field Stations		Various	Various	2			2,291	16.0	6.6	2		4	1			
P.I., N.E. Coast Luzon			T. J. Maher	1,790	554		30,306	48.5	138.0	29	93	36				
P.I., Port San Vicente			T. J. Maher	16			1,915									
P.I. West Coast Luzon			T. J. Maher	974	1,645		10,571	7.1		4	4	3				
P.I., Manila Harbor			T. J. Maher	925	13		17,416	1.0	2.0							
P.I., West Coast Palawan			T. J. Maher	8,478	1,643		45,802	62.8	51.0	24	56	23				
			Totals	63,114	34,126	348	863,968	3,976.1	1,865.4	542	5,398	657	80	42	182	73

1. DISCOVERER: R. L. Schoppe and J. Senior, Com'd'g, J. M. Smook, C. Pierce, E. A. Deily, J. Bowie, C. A. Burmister, P. L. Bernstein, C. LeFever, E. B. Lewey, I. R. Rubottom, J. C. Tribble, O. B. Hartzog, J. E. Waugh, H. J. Seaborg, K. R. Gile, F. J. Soule.

2. EXPLORER: G. C. Jones, Com'd'g, L. C. Wilder, R. J. Sipe, E. C. Baum, H. E. Garber, F. A. Riddell, H. C. Applequist, W. Weidlich, S. N. Davis.

3. FATHOMER: R. F. A. Studds and H. C. Warwick, Com'd'g, K. G. Crosby, G. R. Shelton, H. J. Healy, C. A. Schanck, G. C. Mast, M. E. Wennermark, G. W. Hutchison, J. W. Wetzel.

4. GILBERT: R. D. Horns and H. P. Odessey, Com'd'g, C. A. George, W. N. Martin.

5. GUIDE: F. H. Hardy, Com'd'g, R. L. Schoppe, C. Shaw, L, P. Raynor, W. D. Patterson, I. E. Rittenburg, W. H. Bainbridge, F. B. Quinn, G. M. Marohand, W. J. Chovan, C. LeFever, L. W. Swanson, R. C. Bolstad, M. G. Rioketts, H. F. Garber, K. S. Ulm, C. J. Beyma, E. E. Stohsner, H. G. Conerly, F. Seymour.

6. HYDROGRAPHER: F. S. Borden, Com'd'g, L. P. Raynor, A. P. Ratti, R. W. Woodworth, G. L. Anderson, P. C. Doran, V. M. Gibbens, F. R. Gossett, J. N. Jones, K. B. Jeffers, R. A. Gilmore, J. T. Jarman, P. Taylor, E. M. Sawyer, C. G. Mcllwraith.

7. LYDONIA: G. D. Cowie and J. Senior, Com'd'g, E. O. Heaton, T. B. Reed, G. E. Boothe, J. C. Bose, S. B. Grenell, H. O. Fortin, C. A. George, R. A. Eerie, E. B. Brown, W. C. Russell, E. F. Hicks, A. L. Wardwell, F. E. Okeson, R. C. Overton, C. R. Jones.

8. MIKAWE: L. D. Graham and J. A. Bond, Com'd'g, G. W. Lovesee, E. B. Brown, E. L. Jones, J. C. Bull, A. L. Wardwell, R. H. Carstens.

9. OCEANOGRAPHER: H. A. Seran, Com'd'g, R. P. Eyman, L. D. Graham, R. D. Horne, M. O. Witherbee, W. D. Patterson, H. P. Odessey, H. E. Finnegan, C. M. Thomas, J. C. Bose, S. B. Grenell, E. B. Latham, J. H. Brittain, J. P. Lushene, J. S. Morton, R. A. Marshall, E. B. Brown, J. C. Bull, A. L. Wardwell, C. F. Chenworth, W. N. Martin, R. H. Carstens, F. E. Okeson, W. E. Greer.

10. PIONEER: H. B. Campbell, Com'd'g, R. R. Moore, W. M. Scaife, J. C. Sammons, L. S. Hubbard, R. C. Rowse, H. J. Healy, G. M. Marchand, G. A. Nelson, W. R. Porter, G. R. Fish, M. E. Wennermark, E. K. Lariviere, W. K. Scroggs.

11. SURVEYOR: A. M. Sobieralski, Com'd'g, G. L. Bean, W. F. Malnate, I. T. Sanders, C. A. Burmister, J. D. Thurmond, G. J. Wagner, J. Laskowki, M. H. Reese, F. A. Riddell, J. C. Ellerbe, J. C. Tison, H. C. Applequist, W. F. Deane, E. H. Sheridan, W. R. Tucker, D. S. Sturmer, R. W. Healy, E. G. Zimmerman, W. J. Leary.

12. WESTDAHL: H. A. Karo, Com'd'g, G. E. Morris, A. N. Stewart, D. H. Konichek.

Field Stations: Manila, T. J. Maher, Director of Coast Surveys; Boston, E. B. Roberts; New York, C. A. Egner; New Orleans, G. C. Mattison; San Francisco, R. R. Lukens; Seattle, O. W. Swainson; Honolulu, T. H., J. H. Peters; San Juan, Puerto Rico, E. H. Bernstein.

Washington Office: G. T. Rude, Chief of Division; R. F. Luce, Assistant Chief; F. G. Engle, Chief, Section of Vessels and Equipment; F. B. T. Siems, Chief, Section of Coast Pilot; F. L. Peacock, Chief, Section of Field Work;

Other Officers attached to Division of H. & T. on duty in Washington office: H. A. Cotton; C. Shaw; O. S. Reading; J. A. Bond; R. F. A. Studds; P. A. Smith; E. H. Kirsch; J. S. Morton.

DIVISION OF TIDES AND CURRENTS

Summary of Statistics - 1937

P. C. Whitney, Chief of Division

L. S. Hubbard
R. C. Rowse

Tide Survey - San Francisco Bay

Tide stations occupied	22
Number of bench marks leveled to	194

E. F. Hicks

Washington Office and Tide Survey, Barnegat Bay

Tide stations occupied	15
Number of bench marks leveled to	38

Other Field Activities of Division

Tide stations occupied for general purposes	65
Tide stations occupied for hydrographic surveys	74
Long period current stations occupied	5
Short period current stations occupied	111
Number of bench marks leveled to	770

DIVISION OF TERRESTRIAL MAGNETISM AND SEISMOLOGY

Summary of Statistics - 1937

N. H. Heck, Chief of Division
E. W. Eickelberg, Assistant Chief of Division
J. H. Peters, In charge Honolulu Magnetic Observatory
H. A. Cotton, In charge San Juan Magnetic Observatory
A. K. Ludy, In charge Cheltenham Magnetic Observatory
R. E. Gebhardt, In charge Sitka Magnetic Observatory
John Hershberger, In charge Tucson Magnetic Observatory

Magnetics

Field Determinations

Chiefs of Magnetic Parties - S. A. Deel, F. P. Ulrich

Magnetic Parties	
No. of Declination Determinations	13
No. of Horizontal Intensity and Dip Determinations	12
Hydrographic and Geodetic Parties	
No. of Declination Determinations	107
Cooperators	
No. of Declination Determinations	81
No. of Magnetic Observatories in operation	5

Seismology

Earthquakes reported	136
Seismological instruments in use:	
Accelerographs	42
Displacement meters	6
Weed seismographs	11
Tiltmeters	4
Shocks recorded, strong motion instruments	7
Vibration observations made	95
Shaking machines tests made	50
No, of Teleseismic Stations in operation	18
No. of stations reporting to Science Service for immediate determination of epicenters by Coast and Geodetic Survey	30

DISTRIBUTION OF PARTIES AND STATISTICS

GEODESY - FISCAL YEAR 1937

Chief of Party	Locality	New stations established	Length of Scheme	Area
			Miles	Sq. Mi.
	TRIANGULATION FIRST ORDER			
J. Basie J. D. Thurmond	Little Colorado River, Ariz. and New Mexico	107	820	10,800
	Upper Rio Grande, Colo.	24	90	2,860
Connecticut Geodetic Survey Under Supervision of U.S.C. & G.S.	Collinsville, Conn. to Providence, R. I.	33	92	987
J. P. Lushene	Yarmouth base net, Mass.	3	4	13
	Wellfleet base net, Mass.	3	5	15
	Newbury base net, Mass.	3	1	6
	Bohlen-West Hills Connection, N. Y.	1	8	14
	Northern New Jersey	0	32	380
G. Thorom	Colville and Spokane Indian Reservations, Wash.	57	800	4,000
	Fort Hall Indian Reservation, Idaho	20	80	1,000
	Southern Ute Indian Reservation, Colo.	41	180	4,445
W. E. Poppar	Lower Rio Grande, N. Mex. and Texas	91	800	5,350
	San Juan River, Utah	25	120	4,300
	Uintah-Ouray Indian Reservation, Utah	37	130	4,550
J. C. Thurmond	Pine Ridge and Rosebud Indian Reservations, South Dakota	89	390	6,400
	TRIANGULATION, SECOND ORDER			
J. Basie	Shoshone Indian Reservation, Wyoming	99	75	5,250
Florida Mapping Project, Under Supervision of U.S.C. & G.S.	Orlando to Okeechobee, Florida	30	140	1,400
	York to Lee, Florida	33	160	1,500
	Shady to Lilly, Florida	33	160	1,600
L. G. Johnson	Northern Idaho	18	90	1,000
	BASE LINES, FIRST ORDER			
B. B. Larson	Watesumba, Florida		3.4	
J. P. Lushene	Yarmouth, Mass.		3.8	
	Wellfleet, Mass.		3.7	
	Newbury, Mass.		4.6	
	RECONNAISSANCE, FIRST ORDER TRIANGULATION			
J. S. Silby T. J. Mitchell	Pine Ridge and Rosebud Indian Reservations, South Dakota		390	6,400
J. S. Silby	Lower Rio Grande, New Mexico and Texas		200	5,350
J. Basie W. Wisnetter T. J. Mitchell	Little Colorado River, Ariz. and N. Mexico		220	10,800
Connecticut Geodetic Survey, Under Supervision of U.S.C. & G.S.	Connecticut-Rhode Island boundary		45	360
J. P. Lushene	Yarmouth base net, Mass.		4	12
	Wellfleet base net, Mass.		5	15
	Newbury base net, Mass.		1	8
	Bohlen-West Hills Connection, N. Y.		8	14
W. Wisnetter	Uintah-Ouray Indian Reservation, Utah		130	4,050
	San Juan River, Utah		130	4,800
	Southern Ute Indian Reservation, Colo.		160	4,445
L. G. Simmons	Colville and Spokane Indian Reservations, Washington		100	4,000
	Fort Hall Indian Reservation, Idaho		80	1,900
L. G. Simmons T. J. Mitchell	Upper Rio Grande, Colo.		90	2,950
	RECONNAISSANCE, SECOND ORDER TRIANGULATION			
J. S. Silby	Abilene to Benjamin, Tex.		80	960
J. S. Silby E. B. Pooker	Hollis to Duncan, Oklahoma		120	1,300
	Iona Park to Breckenridge, Texas		115	1,610
	Crystal City to Menard, Texas		155	1,660
	RECONNAISSANCE, SECOND ORDER TRIANGULATION (cont.)			
J. S. Silby E. B. Pooker (cont.)	Rockland to San Saba, Texas	108	1,575	
	San Saba to San Antonio, Texas	85	2,180	
	San Antonio to San Diego, Tex.	140	1,580	
J. S. Silby	Osage to Leasburg, Texas	160	2,060	
	Seagraves, Texas to Norman, Okla.	135	1,950	
	Norman, Oklahoma to Caldwell, Kansas	160	2,090	
	Caldwell to Salina, Kansas	130	1,950	
J. Basie T. J. Bryant	Shoshone Indian Reservation, Wyo.	73	5,250	
	Okeechobee to Fort Myers, Fla.	70	490	
Florida Mapping Project, Under Supervision of U.S.C. & G.S.	Lake Wales to Melbourne, Fla.	46	450	
	Cross City to La Crosse, Fla.	40	400	
L. G. Johnson	Northern Idaho	90	1,800	

LEVELING

Locality	No. of miles of 1st order	No. of miles of 2nd order	Total no. of miles of 1st and 2nd order
California	90	130	210
Georgia	67	23	90
Idaho	26	173	199
Indiana	5	46	51
Maine	---	74	74
Montana	39	---	39
Nevada	---	131	131
New Hampshire	---	47	47
New Jersey	---	65	65
New York	76	117	193
North Carolina	---	128	128
Ohio	---	354	354
Oregon	330	257	587
Pennsylvania	---	191	191
Tennessee	---	40	40
Vermont	---	78	78
Virginia	---	43	43
Washington	146	210	356
West Virginia	---	8	8
Totals	769	2,001	2,770

The following Chiefs of Party were engaged in leveling operations at various times during the fiscal year:

R. M. Gibson, A. C. Thorson, E. B. Stchmer, L. B. Rulon, C. J. Sayre, J. Lebacqueri

ASTRONOMICAL OBSERVATIONS

Chief of Party	State	Number of determinations: Latitude	Longitude	Azimuth
R. H. Woodworth	Guatemala-El Salvador	1	0	1

GRAVITY OBSERVATIONS

Chief of Party	State	Number of determinations: Pendulum	Check
C. J. Aslakson	Alabama	21	1
	Louisiana	6	8
	Mississippi	6	1
	Oklahoma	0	2
	Texas	10	10
	Virginia	16	1
C. A. Schoepe	Arizona	4	0
	Massachusetts	1	0
	New Mexico	4	6
	Rhode Island	2	0
	Texas	4	8
A. J. Hoskinson	New York	1	0
	Pennsylvania	1	1
	Total	85	29

SUMMARY OF STATISTICS

Geodesy - Fiscal Year 1937

Activity	Stations	Miles
Triangulation:		
First order	- - -	1,596
Second order	- - -	615
Base lines, first order	- - -	13.2
Reconnaissance:		
First order	- - -	1,527
Second order	- - -	1,705
Leveling:		
First order	- - -	769
Second order	- - -	2,001
Gravity determinations	102	- - -
Total	102	8,226.2

THE CHART DIVISION

The commissioned personnel during the 1937 fiscal year consisted of:

L. O. Colbert	Chief of Division
K. T. Adams	Assistant Chief of Division
C.K. Green	Chief of Field Records Section
G. M. Durgin	Chief of Aeronautical Chart Section

Some of the outstanding accomplishments of the division during the year were:

The compilation and printing of 23 new nautical charts, of which eight were of the new 1:40,000 scale Intracoastal Waterway Series.

The printing of new editions for 110 nautical charts.

The compilation and printing of the final seven sectional aeronautical charts and the printing of 96 new editions of previously published aeronautical charts. With the printing of the final seven charts, the entire series of sectional aeronautical charts covering the country became available.

The issue of aeronautical charts in 1937 was 56 per cent greater than the issue of 1936, which was a previous record issue.

The total number of impressions made on the printing presses was 5,042,474, only slightly less than in 1936.

The total issue of nautical charts was 333,366, a large increase over that in 1936 and established a yearly record issue, exceeding that of 1920 which was abnormally high due to governmental requirements.

September 4, 1937

U. S. COAST AND GEODETIC SURVEY
FIELD MEMORANDUM NO. 1
1937

TERMS USED IN AIR PHOTOGRAPHY

A committee of the American Society of Photogrammetry is at present engaged in compiling and defining terms used in air photography. Pending completion of this work and acceptance by this Bureau, the following terms will be used in the meanings indicated:

Air photograph The general term to describe a photograph taken from an aircraft whether it is oblique or vertical and whether it was taken for subsequent use in mapping. This term shall be used at all times when it is not essential to differentiate between a print and a film or a positive and a negative. (Not aerial photograph, nor air photo, nor aerial photo.)

Air photographic survey The combined field operations necessary in the air, on the ground, and in the office for the making of a topographic map from air photographs. This includes the taking of the photographs, field inspection, supplementary surveys necessary, and the preliminary and final drawings, but does not include reproduction. (Not photo-topographic survey.)

Map drawing The original inked drawing or compilation of a map which is to be later reproduced. This general term describes a drawing whether on paper, cloth, or celluloid. (Not map compilation, nor map survey, nor air photo compilation.)

Map A printed reproduction of a map drawing. Under this definition no map drawing, survey, nor compilation can be classed as a map until It has been published.

Topographic map A map of larger scale than a general map, but of smaller scale than a plan, which delineates most of the natural and artificial features of a certain portion of the earth's surface. Such a map is always based on field surveys plotted on a selected projection at a definite scale.

Planimetric map A topographic map resulting from a horizontal survey, and containing little or no information as to elevations. All topographic maps compiled by the Coast and Geodetic Survey from air photographs are planimetric maps. (Not line-map, nor planimetric line-map.)

In general correspondence, the term "topographic map" shall be used when referring to the maps compiled from air photographs and issued by this Bureau, unless it is desirable to bring out the fact that the maps contain no contours, in which case the term "planimetric map" may be used.

The terms "aerial", "photo", and "compilation" are to be avoided in connection with air photographic surveys and topographic maps compiled from air photographs.

Air photographs are taken by the new 9-lens camera and to certain personnel is assigned the task of completing an air photographic survey. This field party makes the map drawing which is forwarded to this office for reproduction. The resulting topographic maps are issued by the Bureau.

J. W. Lawley
Acting Director

M--4-I3

FIELD MEMORANDUM NO. 2 1937.

Subdividing Stadia Rods.

(To supplement Field Memorandum No. 1, 1936.)

A method for subdividing stadia rods into the intervals for the individual graduations is now in use in the Instrument Division, and the method may be used in the field when conditions permit.

The interval between the various marks established in accordance with paragraphs 2 and 7 of Field Memorandum No. 1, 1936, (see page 189, Field Engineers' Bulletin No. 10, 1936) may be subdivided into the desired spaces by the use of Chart No. A-635, which can be obtained from the Washington Office on requisition. The length of this chart is divided into 40 intervals, which are alternately .02 and .03 of the total distance.

When the 200 meter intercept has been obtained as mentioned in the paragraph above, lay off on Chart No. A-635 a diagonal line from one corner to the opposite side so that the length 'ab' is exactly equal to one-half the total intercept obtained for the 200 meter distance. The parallel lines will intercept the diagonal thus constructed in the proper proportions for the stadia graduations. These intercepts may be transferred directly to the stadia rod by laying the chart over the rod and pricking the points directly on the rod.

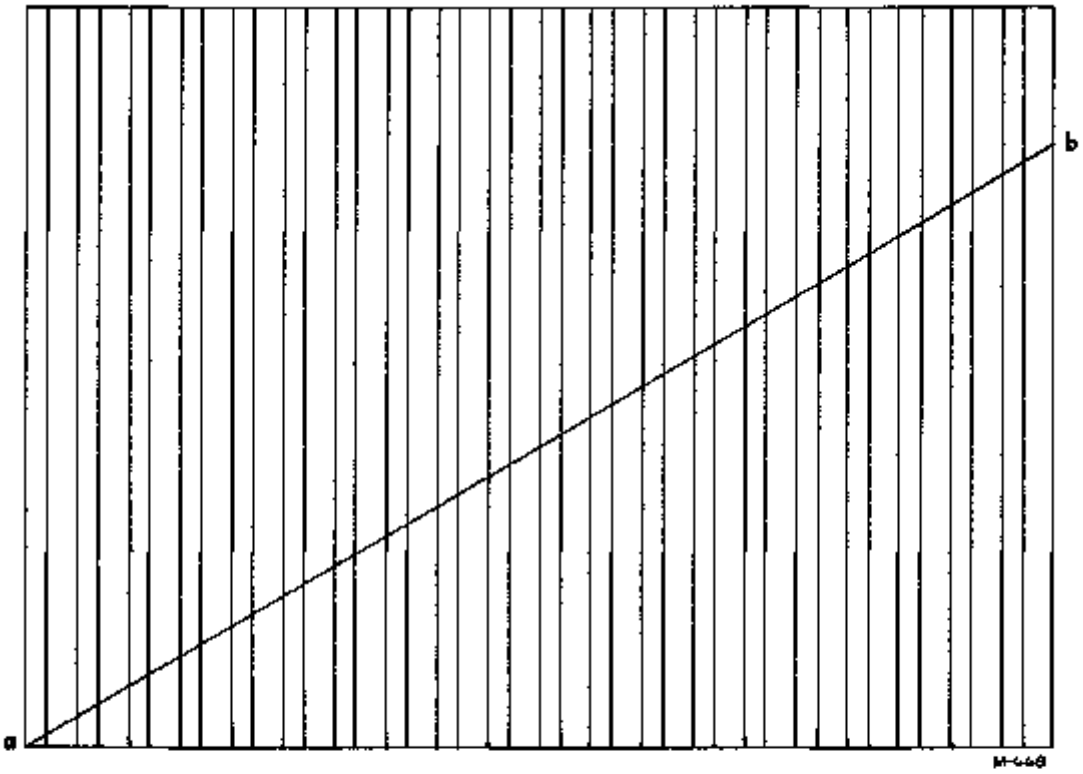

Acting Director.

AWARD TO DR. BOWIE *

The Queen of the Netherlands has appointed Dr. William Bowie, retired chief of the Division of Geodesy of the U. S. Coast and Geodetic Survey of the Department of Commerce, an officer of the Order of Orange-Nassau, and has presented to him, through the Minister of the Netherlands, the medallion and diploma of the order.

This honor was bestowed upon Dr. Bowie "in recognition of outstanding achievements in the interests of international science and geodesy, and his collaboration with Dr. F. A. Vening Meinesz, professor of geodesy at the University of Utrecht, the Netherlands, and a member of the Netherlands Geodetic Commission, in the determination of gravity-at-sea."

Dr. Bowie and Dr. Meinesz have worked together many years in the International Association of Geodesy, a branch of the International Geodetic and Geophysical Union. Dr. Bowie was president of that association from 1919, when it was created, until 1933, when he became president of the International Geodetic and Geophysical Union. He was succeeded as president of the International Association of Geodesy by Dr. Meinesz.

It was largely through this association that Dr. Bowie became interested in the work of Dr. Meinesz, who had devised and constructed an apparatus by means of which accurate determinations of the values of gravity can be made aboard a submarine. Dr. Bowie was twice instrumental in bringing Dr. Meinesz to the United States to conduct expeditions for the determination of gravity-at-sea on submarines of the U. S. Navy operating in West Indian waters.

Dr. Bowie was retired from the U. S. Coast and Geodetic Survey in December, 1936, after 41-1/2 years of service, during twenty-seven of which he was chief of the Division of Geodesy.

He has received honorary degrees from Trinity College, Lehigh University, George Washington University, and the University of Edinburgh. He holds also honorary memberships in the Academy of Sciences of France, the Academy of Sciences of Norway, the National Academy of History and Geography (Mexico) and the Russian Geographical Society. In 1937, he was awarded the Elliot Cresson Medal by the Franklin Institute of Philadelphia for his contributions to the science of geodesy.

Dr. Bowie is a member of the National Academy of Sciences; the Philosophical Society of Washington, of which he was president in 1926, the Washington Academy of Sciences, of which he was president in 1930; the Washington Society of Engineers, of which he was president in 1914; the American Society of Civil Engineers; the American Astronomical Society, and other leading national and international scientific societies. He is the author of a number of publications of the Coast and Geodetic Survey on the varied branches of geodesy.

* Reproduced by the courtesy of "Science".