the boundary between high and low pressure conditions, and that when the high pressure gained control over the weather conditions they dissipated. As indicated by the kite meteorogram record, this inversion was only about 0.5° C., and probably continued throughout the period of low clouds. While the clouds existed the wind velocities were about 50 per cent greater than before or afterward. Had the temperature gradient been greater at this inversion the clouds would have been denser and less favorable for halo formation. As low clouds in winter conditions are usually thick-layered, the complex halo phenomena that accompany the thinner type of low clouds are infrequent. When complex halo phenomena exist it seems that definite knowledge of the height of the clouds would be interesting. With summer conditions, low clouds consist of vapor particles and are not productive of halo formations.

AN ANGLE-MEASURING DEVICE FOR HALO OBSERVERS.

By JAMES H. GORDON.

[Weather Bureau, Yuma, Ariz., March 29, 1922.]

Upon the suggestion of Mr. H. F. Alciatore, of the Weather Bureau office at San Diego, I am submitting the description of a device designed for measuring the angular diameter of halos. As the only tools used were pocketknife, saw, hammer, plane, and a pair of dividers, the instrument could be made by anyone. It really has many uses. In addition to halo observing, it may be used as a crude sextant, accurate within a degree, for observing northern lights. It has enabled me to make clear points in regard to astronomy that were not otherwise well understood. Two observers a known distance apart could determine cloud heights with it and thus compute their velocity.

Description of instrument.—Base *H* (see fig. 1) is metal 5½ by 5½ inches, weighing about a pound. Bolted to it is a wooden piece, as shown. Frame or cradle for scale board is inch material, uprights securely nailed on; length over all, 9½ inches; height of uprights to centers, 5¾ inches. Scale board is inch material; diameter, 9¾ inches; length, 7¾ inches. Centering tube is set into the board 3¾ inches and extends about three-fourths inch beyond the board to form an axle for turning. Size of tube, 12-gage brass shell; aperture to admit ray of light is the caphole of the shell. On wood at back end of tube paper is pasted and a black spot marked on which the ray of light must center. Enough of the tube is cut away at the back end

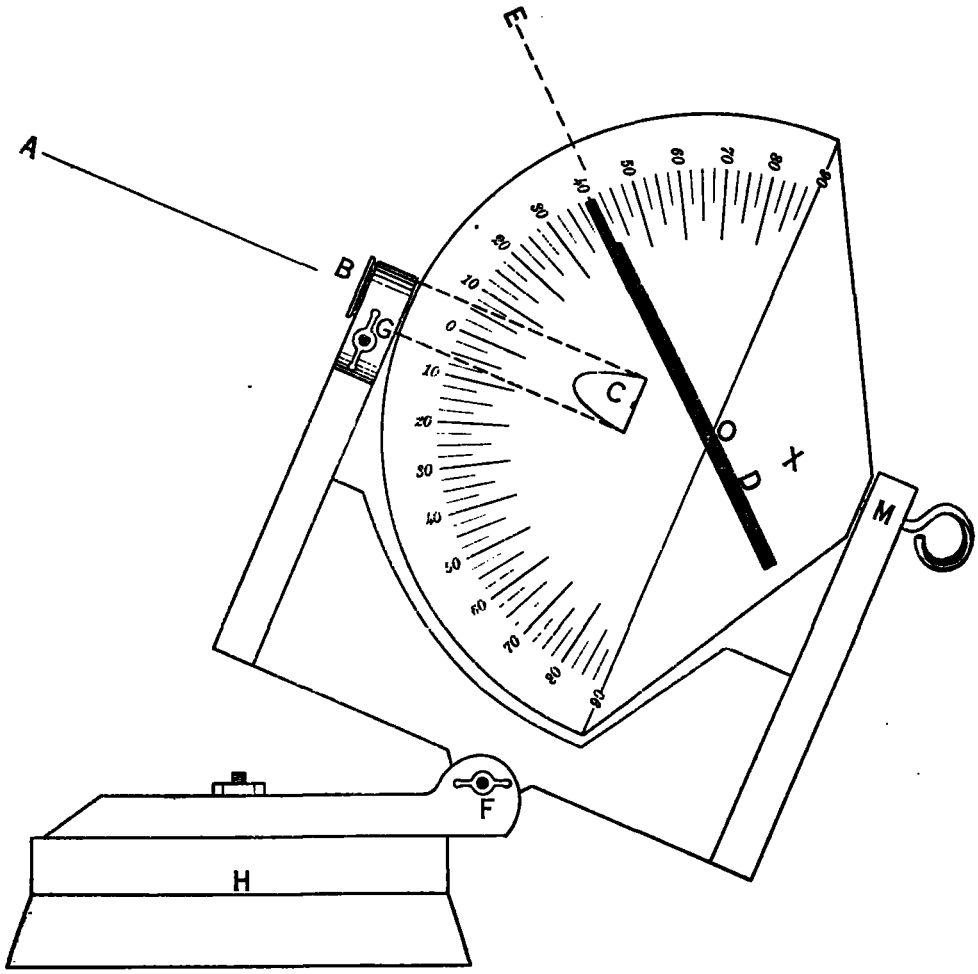

FIG. 1.—Device for measuring halos and other celestial phenomena.

to permit observation for centering ray of light. With lunar halos it is rarely possible to center by means of the ray of light. In this case the pointer is set at zero and centered on moon by adjustment at F. Set screw at F is clamped, and pointer moved to limb of halo as in the other case. Brass strap over tube holds it in place and may be tightened by set screw G to hold scale board in place. Axle at M is a pin used for a maximum thermometer with old-style thermometer support, flattened at end and driven into scale board, furnishing a handle for turning or holding the board. Pointer D is about one-third inch thick material and three-fourths inch wide—width to provide place for level. Nephoscope level has been used and works well. I have not yet arranged a satisfactory mounting for level to insure that scale board is in vertical plane when that is desired.

For halos.—By shifting of base H and angle of inclination at F, center ray of light from sun A passing through small aperture at B on point C at center of back of tube visible through cut out. If halo is complete no shifting of board X is necessary; if but a portion is visible, board may be turned on axis BM, so that the pointer D will bear on the segment visible. Sight along pointer D turning on pivot O until it bears on the limb of the halo. Angle of radius of halo will be shown by pointer on scale.

Angular elevation of any heavenly body.—Set pointer D at zero; set small level on pointer D; turn at F as necessary to level pointer. Clamp F.—This establishes horizon. Turn pointer on object whose elevation is desired and position of pointer on scale will show angle.

Angles in horizontal plane may be measured by leveling board X and clamping at F and G to hold stationary. If desired, C on the scale may be set true north or south by means of compass. Sighting along pointer D at objects whose angular relation is desired and noting reading on scale in each case gives data desired.

RECENT CONTRIBUTIONS TO DYNAMICAL METEOROLOGY.

By EDGAR W. WOOLARD.

[Weather Bureau, Washington, D. C., April 13, 1922.]

In the fifth century B. C., Anaximander of Ionia gave a scientific definition of wind, which is still valid, viz., "The wind is a flowing of air," although there should perhaps be added the words "relative to the surface of the earth." Sometimes a wind is defined as air in motion near the earth's surface and nearly parallel to the latter, all other motions of masses of air being spoken of as air currents;[1] but this distinction is not always recognized, and it is unimportant for purposes of dynamical meteorology.

Dynamical meteorology considers the mass motions taking place in the earth's atmosphere; such motions must of necessity obey the ordinary laws of dynamics. Now, it may be demonstrated[2] directly from the kinetic theory that although a gas is composed of discrete particles, its mass motions will obey the ordinary hydrodynamical equations derived[3] explicitly on the very different assumption of continuity.

Therefore the starting point of dynamical meteorology will be the hydrodynamical equations of motion of a fluid covering a rotating globe.[4] Any quantitative theory of the various winds involves first of all a general account of the fundamental dynamical principles common to all winds, and a classification of winds based on dynamical principles, with a subsequent elaboration of the theory of each type. A comprehensive treatise on dynamical meteorology, written for the student with extensive mathematical training, has not yet appeared, although such a work is much to be desired; of great importance in this connection, however, are the recent papers of Jeffreys, in the latest of which[5] he has given a classification of winds, based on a discussion of the relative importance of the various relevant physical factors which determine the characteristics of each type as expressed in the differential equations of motion.

The only forces acting on any mass of air are gravity, hydrostatic pressure, and friction; the acceleration of the mass is composed of two parts—acceleration relative to the surface of the earth, which we observe, and the acceleration common to this surface itself; by the laws of motion, the sum of the two parts of this actual acceleration is equal to the sum of the accelerations produced by the three forces. Each term or set of terms in the general equations represents one of the five rates of change of momentum corresponding to the five accelerations.

In the case of atmospheric motions, the general equations reduce to—

$$\left.\begin{aligned} \frac{du}{dt} - 2\omega v\cos\theta &= -\frac{1}{\rho}\frac{\partial p}{\partial x} + k\frac{\partial^2 u}{\partial z^2} \\ \frac{dv}{dt} + 2\omega u\cos\theta &= -\frac{1}{\rho}\frac{\partial p}{\partial y} + k\frac{\partial^2 v}{\partial z^2} \\ 0 &= -\frac{1}{\rho}\frac{\partial p}{\partial z} - g \end{aligned}\right\}$$

We then have three possible cases: (1) Eulerian winds, in which the rotational and frictional terms are so small in comparison with the accelerational term that they may be neglected—the observable acceleration corresponds to to the horizontal pressure gradient, as in ordinary elementary hydrodynamics; (2) geostrophic winds, in which the accelerational and frictional terms are negligible in comparison with the rotational term—the velocity is at right angles to the pressure gradient; (3) antitriptic winds, in which the rotational and accelerational terms are negligible in comparison with the frictional term—these winds are driven by, and blow in the direction of the pressure gradient, but the velocity does not increase throughout the whole journey.

A consideration of the factors shows that winds on a scale comparable with the size of the British Isles, or larger, are geostrophic; tropical cyclones, and all cyclostrophic winds, as tornadoes, are Eulerian; land and sea breezes, and mountain and valley winds, are mainly antitriptic. However, in order to explain seasonal pressure changes at the earth's surface, the accelerational term must be retained in the equations for the geostrophic wind; temperature differences are capable of accounting for the annual pressure variation in Asia and probably for the permanent winds of Antarctica. Jeffreys has worked out a mathematical theory of some of the antitriptic winds which agrees well with the facts. A fundamental part is played by the deviation of the actual average temperature lapse rate from the adiabatic value.

[1] *Cf.* W. I. Milham, *Meteorology*, New York, 1912, p. 136; W. M. Davis, *Elementary Meteorology*, 1894, p. 93.
[2] J. H. Jeans, *The Dynamical Theory of Gases*, 3 ed., Cambridge, 1921, pp. 165–175.
[3] See P. Appell, *Traité de Mécanique Rationnelle*, Tome 3, 3 ed., Paris, 1921; H. Lamb, *Hydrodynamics*, 4 ed., Cambridge Press, 1916.
[4] Lamb, *op. cit.*, p. 318.
[5] Harold Jeffreys, On the Dynamics of Wind. *Quar. Jour. Roy. Met'l Soc.*, 48 : 29–47, 1923.