U. S. C. & G. SURVEY
LIBRARY
AND
ARCHIVES
No. 11809 See mistake in acc. book.
Shelf
Case

RARE BOOK.
QB
296
.U6
U6
1842

ORIGINAL CONTRACTS

FOR

THE SURVEY OF THE COAST.

National Oceanic and Atmospheric Administration

Rare Books from 1600-1800

ERRATA NOTICE

One or more conditions of the original document may affect the quality of the image, such as:

Discolored pages
Faded or light ink
Biding intrudes into text

This has been a co-operative project between NOAA central library, the Climate Database Modernization Program, National Climate Data Center (NCDC) and the NOAA 200th Celebration. To view the original document, please contact the NOAA Central Library in Silver Spring, MD at (301) 713-2607 x 124 or at Library.Reference@noaa.gov

HOV Services
Imaging Contractor
12200 Kiln Court
Beltsville, MD 20704-1387
April 8, 2009

97248

CONTENTS.

riginal contracts for survey of the coast. F. R. Hassler, 1842. p.1-D. (Also in U. S. C. Survey. Reports and other Documents, 1816-1843.)

eport of F. R. Hassler showing progress of Coast Survey. (From North American Review, April, 1842. p.446 et seq.) p.1-8. (Also in U. S. Coast Survey. Reports and other documents, 1816-1843.)

he Coast Survey. An article from the Princeton Re-
R view, April, 1845. By Joseph Henry. p.9-31.

eport of the Superintendent showing the progress of the work in 1845. (Also a separate.)

he United States Coast Survey. From the Literary
S World, September 11, 1847. p.50-51.

esults obtained in connexion with the survey of the coast of the United States for the difference of longitude by electro-magnetic telegraph. 1847.
I (Extract from Professor Schumacher's Astronomische Nachrichten, February 7, 1848.) p52-57.

eview of the Annual Report of the U. S. Coast Survey, 1847. (From the American Journal of science and arts. Second series.) p.58-68. (Also in bound volume of American Journal of Science and Arts, 1848.)

peech of Mr. Jefferson Davis of Miss., on the subject of the Coast Survey of the United States. Delivered in the Senate of the U. S., February 19, 1849. p.69-108.

urvey of the coast of the United States. The Committee of science and arts, constituted by the Franklin Institute of the State of Pennsylvania, for the
o motion of the mechanic arts, to whom was referred for examination and report the subject of "The Progress of the survey of the coast of the United States". (From the Journal of the Franklin Insti-

Department of Commerce and Labor

No. 204
Ed. 1-27-10—250,000

tute, February 8, 1849.) p.109-114. (Also in bound volume of Journal of Franklin Institute, 1849.)

e Coast Survey of the United States. (Hunt's Merchant Magazine, June, 1849.) p.115-126.

ply to an article in the February number of Hunt's Merchant Magazine on the Coast Survey of the United States. By Lieut. Charles H. Davis, of the United States Navy. April, 1849. p.127-140.

emarks by an Assistant, (of the Coast Survey) on an article in the February number of "Hunt's Merchant Magazine," "On the Survey of the Coast of the United States," 1849. (Reprint from Hunt's Merchant Magazine, April, 1849.) p.141-153.

peech of Mr. J. A. Pearce of Maryland, on the subject of the Coast Survey of the United States. Delivered in the Senate of the U. S., on Saturday, Feburary 17, 1849. p.154-168.

avis, Lieut. C. H. The Coast Survey of the United States. p.169-202.

xtracts from the Report of the Superintendent of the Coast Survey to the Secretary of the Treasury, showing the progress of that work during the year ending November, 1850. p.203-217.

alker, Sears C. On the recent telegraph operations of the U. S. Coast Survey, ~~Assistant, U. S. Coast Survey.~~ (From the Astronomical Journal. April 20, 1850.) p.218-223. (Also in bound volume of Astronomical Journal, 1850.)

S. Coast Survey. General organization and field work. Descriptive analysis of the contents of the Crystal Palace. (From New York Daily Times, August 25, 1853.) p.224-227.

Department of Commerce and Labor

NO. 204
Ed. 1-27-10—250,000

The United States Coast Survey: its history, objects, organization, methods and results. (From Putnam's Monthly, November, 1855.) p.228-239.

U. S. Coast and Geodetic Survey. Special report on the comparative progress and expenditure of the Coast Survey in different years. Foreign surveys etc. Wash. Henry Polkinhorn, 1858. p.240-258.

Review of the operations and results of the United States Coast Survey. (From the American Journal of Science and Arts, v. 25, p.75, 1858.) p.259-277. (Also in bound volume of American Journal of Science and Arts for 1858.)

American Association for the Advancement of Science. Committee of Twenty. Report on the history and progress of the American Coast Survey up to the year, 1858. p.278-369. (Also in bound volume of the Report of the American Association for the Advancement of Science, 1858.)

A popular account of the United States Coast Survey. (From Appleton's New American Cyclopedia, v.5, 1858.) p.370-392. (Also in Appleton's American Encyclopedia, 1883.)

U. S. Coast and Geodetic Survey. The United States Coast Survey. (From the ~~Material~~ National Recorder, January, 1859.) p.393-395.

The United States Coast Survey. Review of a report of the Secretary of the Treasury, communicating in answer to a resolution of the Senate, a report showing the amount expended and the progress made in the Coast Survey. (Ex. Doc. No. 6, 35th Cong. 2d Sess.) (From the North American Review, April, 1860.) p.401-432. (Also a separate.)

Department of Commerce and Labor

No. 204
Ed. 1-27-10—250,000

Bache, R. M.

What the Coast Survey has done for the war. Reprinted from the June and July (1865) numbers of the United Service Magazine. p.433-458. (Also in bound volumes of United Service Magazine for 1865.)

United States Coast Survey. Report to the Secretary of the Treasury by A. D. Bache, Superintendent of the Coast Survey, October 10, 1865. p.459-465.

The Coast Survey. (From the New York Herald, August 1, 1881.) p.466-473.

The Coast Survey. (From New York Herald, August 3, 1881.) p.469-473

Thorn, F. M. U. S. Coast and Geodetic Survey. Historical compilation. 1887. p.474-488. (Also published as a separate.)

Ogden, Herbert A. Survey of the coast. Lecture delivered before the National Geographic Society, at Washington, April 13, 1888. Published in the National Geographic Magazine, v.1, no.1, p.489-508.

One Who has Examined Public Documents. The Coast Survey. (From the New York Times, November, 1858.) p.509-525.

New York Exhibition Illustrated. The United States Coast Survey. 1852. p.526-528. Saxton's Metallic Deep-Sea Thermmeter. 1852. p.529. Tides and Tide Guages. p.530-531.

Department of Commerce and Labor

No. 204
Ed. 1-27-10—250,000

2

This Book is the Property of the
U. S. COAST AND GEODETIC SURVEY,
and must be carried on Book Inventory
if not returned be[illegible] Expiration
of the [illegible]

ORIGINAL CONTRACTS.

TREASURY DEPARTMENT, *June* 20, 1842.

SIR: I have the honor to transmit the following communication, in answer to the inquiries made in your letter of the 31st ultimo, in behalf of the special committee "on the coast survey."

First. Respecting "the contract between the Government and F. R. Hassler, superintendent of coast survey," of which a copy is asked by the committee, I beg leave respectfully to refer to the accompanying papers, (marked A, B, C, and D,) as containing all the information in possession of the Department, in reference to the engagement of the services and the terms on which Mr. Hassler undertook to perform the work, in the year 1816, and on its revival in 1832.

Second. In reference to the inquiry, "under what authority was Mr. F. R. Hassler employed to make a set of measures for the United States?" I would respectfully refer the committee to the copy of a communication, herewith sent, from Mr. Secretary Ingham, under date of the 30th of April, 1831, (marked C,) by which it appears he was employed by the Treasury Department, with the sanction of the President, to superintend the manufacture of weights and measures for all the custom-houses of the United States.

Third. In regard to the inquiry, "when was the work commenced, and how much has been expended, yearly, from its commencement up to the present time, specifying the sums, to whom paid, and for what purpose?" it is to be remarked, in answer to the first branch of this inquiry, that on the 29th of May, 1830, the Senate of the United States adopted a resolution directing the Secretary of the Treasury "to cause a comparison to be made of the standards of weight and measure now used at the principal custom-houses in the United States, and report to the Senate at the next session of Congress." To comply with the requirements of this resolution, it appears Mr. Secretary Ingham deemed it expedient to engage the services of Mr. Hassler to make the necessary comparisons, as shown by the accompanying copy of his letter to that gentleman, dated 12th June, 1830, (marked B,) and inviting him to come on to Washington to perform that duty. To institute the comparisons mentioned, it became necessary to require the collectors of the principal ports to forward their standards to Washington, which occasioned some unavoidable delay in the commencement of the work. The proper tests and comparisons were accordingly made by Mr. Hassler, and the determined results were submitted to the Senate, in reports from the Department, under dates of the 3d of March, 1831, and 20th June, 1832, which will be found in Senate documents, 2d session of 21st Congress, 2d volume, document 74, and Executive documents, 1st session 22d Congress, volume 6, document 299.

As the results of these comparisons exhibited serious discrepancies between the standards used at the respective ports, the Department gave directions to Mr. Hassler to superintend, in this city, the manufacture of standard weights and measures for all the custom-houses. These directions were given in April, 1831, but, as many arrangements had to be made before the work of fabricating these standards could be properly entered upon, such as the collection of materials and the preparation of re-

quisite machinery, some time elapsed before it went into complete operation. There is no data in the Department by which the precise time when the work was commenced can be fixed.

In reply to so much of the second branch of the inquiry under consideration as relates to the amount "expended yearly, from its commencement," I beg leave to refer to the statement prepared by the Register of the Treasury, and transmitted to the committee on the 15th instant, in compliance with the request of Mr. Aycrigg, a member of the committee.

Fourth. As to the inquiry, "from what source or sources have the funds thus used been derived?" I have to state that the funds have been derived from the accruing revenue, under the authority believed to be given in the 21st section of the general collection act of the 2d of March, 1799, requiring surveyors of the customs, from time to time, and particularly on the first Mondays in January and July, in each year, to examine and try the weights, measures, and other instruments, used in ascertaining the duties on imports, with standards, "to be provided by each collector, at the public expense, for that purpose." The construction given by the Department to this provision of law seems to have been sanctioned by a special committee of the House of Representatives, of which the Hon. Horace Binney, of Pennsylvania, was chairman, as shown by their report, No. 132, vol. 1, second session of the 23d Congress, which closes with the following resolution, which was adopted by the House:

"*Resolved*, That it is highly expedient that the Treasury Department should complete, with as little delay as practicable, the fabrication of standards of weights and measures, for the supply of the different custom-houses of the United States, upon the principles set forth in the reports of the Secretary of the Treasury to the Senate on the 3d of March, 1831, and 20th June, 1832."

Both Houses of Congress subsequently sanctioned the source from which the expenditures were made, by a joint resolution of the 14th June, 1836, directing the Secretary of the Treasury to finish a complete set of all the weights and measures adopted as standards, for the respective States; and by the 7th section of the act "for the support of the military academy," &c., passed the 7th July, 1838, the Secretary of the Treasury is directed to cause to be made, under the superintendence of Mr. Hassler, one standard balance for each State, and, when completed, to be delivered to the respective Governors, for the use of each of the States.

Fifth. In regard to the inquiry, "how many complete sets of weights and measures have been delivered to the Treasury Department, and how have they been disposed of?" I beg leave, in answer, to refer the committee to the statement herewith sent, (marked D,) by which it will be found that two hundred and seven sets of large weights, forty-four sets of ounce weights, and forty-one yard measures, have been delivered by Mr. Hassler to the Department; that, of the former, there have been distributed to custom-houses and States, &c., one hundred and nineteen, of the second twenty-three, and of the latter thirty-four.

Sixth. In respect to the inquiry, "when is it probable the work will be finished?" I would remark, that the Department is not possessed of such information as to enable it to fix any precise time when the work will be finished; but, as it is informed that the capacity measures, and the balance of the ounce weights and yards, have been fabricated, and are now undergoing their final comparison, it is not supposed that much time will elapse

before their final completion. It is understood that the balances designed for the States are also in a state of forwardness. It is deemed proper to observe, in conclusion, that it is not contemplated to furnish the respective custom-houses with balances or ounce weights, they being designed for the respective States alone.

I have the honor to be, very respectfully, your obedient servant,

W. FORWARD,
Secretary of the Treasury.

Hon. F. MALLORY,
Chairman of Select Committee on Coast Survey.

WASHINGTON, *July* 12, 1816.

SIR: Herewith I have the honor to deliver the more detailed articles of the agreement between the Treasury Department and myself, relative to the survey of the coast, as desired by the letter of the Secretary of the Treasury, under the 5th instant.

You will judge if I have expressed myself clearly upon the subjects under consideration, or not, and dispose, in consequence, as you find most proper.

I have the honor to be, with respect and esteem, sir, your most obedient, humble servant,

F. R. HASSLER.

——— JONES, Esq.,
Treasury Department, Washington City.

Articles of engagement between the Treasury Department of the United States and F. R. Hassler, relative to the survey of the coast of the United States.

A. Mr. Hassler engages to bestow all his time, labor, and attention, to the work of the survey; as well to make, himself, the principal part of the general large triangulation, and the consequent calculations, as to superintend and direct the establishment of the observatories, and the officers of engineers, or naval officers, who will be engaged under his orders, in the detail parts of the work, and give them proper instructions to that effect, according to the plan proposed by him, under the 15th May, 1816.

B. He will, to that purpose, have the use of such instruments and books of the collection he has procured, or which are yet to be procured, for the use in this work, as he may find necessary for his objects, and give directions relative to those which are to be used by the officers under his direction.

C. He will be provided from the corps of engineers, on his application to the general of said corps, with the following assistance to his own works, or such part of the same as he may deem necessary, according to circumstances, viz:

1. Two officers of engineers, topographical or others.
2. Some cadets of said corps, in number according to the circumstances.
3. Twelve men of said corps, for the most part artificers, with corporal or sergeant.
4. One large baggage wagon, with four horses, or two smaller ones, as he may require, with the necessary drivers to them.

5. Two saddle horses.

6. Tents for the accommodation of himself, the above-mentioned officers, cadets, and men, and the shelter of the instruments.

7. The necessary field utensils, as well for the personal accommodation of the company as for the works occurring, not comprehending Mr. Hassler's private equipment.

D. Under Mr. Hassler's orders, the officer first in rank accompanying him will have the chief command of the above military assistance, and act as treasurer upon the funds, which will be given to said officer to defray all the expenses of a public nature occurring or ordered by Mr. Hassler; and said officer will render account upon these funds to the Treasury Department.

E. The following are to be considered expenses of a public nature, viz:

1. The keeping in order and securing from injury of the instruments belonging to the Government, their stands and boxes, and the fitting them up for use.

2. Such additions to the collection of instruments and books as may be found necessary by Mr. Hassler in the progress of the work, as well to complete the collection from time to time as to furnish a sufficient number of them for the use of the detail surveyors.

3. The construction of the signals and signal lamps, and their attendance and protection

4. The preparations of the stations, for the convenience of observations, and the securing of them for future utility.

5. The transport of the instruments and the baggage of the company.

6. All expenses consequent or relating to the keeping in order and maintenance of the military assistance stated in article E.

7. All expenses for the establishment of the permanent or temporary observatories, to be erected according to Mr. Hassler's plans.

8. The printing of blank formulas of journals and calculations, for the detail surveyors, if such are found advantageous, as it is probable.

F. Mr. Hassler will receive, as compensation for his personal work in the survey, his superintendence and direction of the whole, and all his personal expenses consequent thereof, the sum of five thousand dollars annually, to be paid quarterly, on his drafts upon the Treasury Department, or otherwise.

G. It is understood that the work shall not be carried on in the form of a bureau or office; but that Mr. Hassler himself, as well as the officers under his direction, shall execute such work as devolves upon them, or are ordered to them in the field, by defraying their own personal expenses, and at home in their private quarters. Therefore, no accounts will be admitted upon room hire, fire wood, stationery, or smaller drawing implements, not provided by the collection of the Government. The above-mentioned compensation is to be considered compensating all his personal expenses, in his absence from home, in the work of the survey, and the items here mentioned, required for his personal use in this work, exclusive only of the expenses stated as of a public nature in article E.

H. The appointments to be made in future, to officers undertaking separate parts of the work, will be fixed so as to comprehend the same articles, and to follow the same principles.

I. If, therefore, Mr. Hassler shall at any time require officers to work under his direction in his quarters, it will be at his option, and entirely a

matter of his private arrangement; otherwise, every officer is to be understood to execute his house work in his own quarters.

K. From these regulations are excepted:

1. All expenditures relating to the use of vessels or shipping, for soundings and the nautical part of the survey, for which proper arrangements will be made in time by the Treasury Department, upon propositions to this effect.

2. The clear executed copies of the maps and charts, either general or special, which will be required by the proper authorities, or prepared for publishing; for which proper draughtsmen will be appointed, and paid according to separate arrangements, to be made with men who may have applied to such works with particular success.

3. All expenses and consequences of engraving, printing, publishing, or executing such number of copies of the maps or charts as may be required for this purpose, or desired by the Government, or the officers to whom it may belong.

F. R. HASSLER.

WASHINGTON, *July* 12, 1816.

TREASURY DEPARTMENT, *August* 3, 1816.

SIR: The correspondence and documents relative to your being employed as superintendent of the survey of the coast, under the act of Congress respecting that object, have been submitted to the President, and your services are engaged, on the following terms:

1. The whole of your time, labor, talents, and attention, shall be given to the work, as well in relation to the superintendence of the duties to be performed by military or naval officers and assistants, or by draughtsmen and engineers, as in relation to the parts of the work which are to be executed by yourself.

2. You will be provided with competent assistance of officers and men, from the corps of engineers and from the navy, with tents and field equipage, with baggage wagons and horses; and you will have the free use of the public instruments and books, for the purposes of the survey.

3. The party of officers, men, and assistants, accompanying you, will be ordered to conform to your instructions; and all the incidental expenses of the survey, which are of a public nature, will be defrayed by the Government; but your own personal expenses are to be defrayed by you, whether you are employed at home or abroad.

4. Funds will be placed, from time to time, upon your requisition, in the hands of the chief officer accompanying you, to be disbursed, upon your order, in the payment of the expenses of a public nature, and to be accounted for by him at the Treasury once at least in every three months.

5. You will receive, in full for all your services, a compensation at the rate of $3,000 per annum, and for your personal expenses an allowance at the rate of $2,000 per annum, to commence on the 18th day of June, 1816, and to be paid quarterly at the Treasury, upon your drafts.

6. You will make frequent reports of your progress to this Department, and deposite here all the surveys, drafts, notes, charts, maps, journals, and documents, in any wise belonging to the survey of the coast; and you will return the public instruments and books to such place as shall be directed, when they are no longer required for the business of the survey.

7. If at any time it should be necessary to explain the nature and extent of your employment and engagement, your communications to this Department, and particularly the articles submitted by you on the 12th July, 1816, will be resorted to.

It only remains to repeat the President's solicitude for a successful and speedy execution of the great national work which is thus confided to you, and to assure you of the esteem with which I am, sir, your most obedient servant,

A. J. DALLAS.

Mr. F. R. HASSLER,
[*To the care of Robert Patterson, Esq., Director of the Mint, Phila.*]

Copy certified conformable to the original.

F. R. HASSLER.

Upon the articles of agreement between the Treasury Department of the United States and F. R. Hassler, relative to the survey of the coast of the United States.

1. Mr. Hassler engages to undertake the direction of the survey of the coast of the United States, according to the law to that effect of 1807, and the act to put the same in activity, passed in 1832, as well by performing such of the principal parts of the same as will require his own personal work, as by directing and superintending the work of such officers of the army and navy, and also civil engineers, as will be appointed, upon his recommendation, in the other parts, and the detail surveys, the determination of soundings, and such like.

2. He will, for that purpose, have the use and disposition, for himself or his assistants, of the instruments and all other necessary implements, books, &c., that have been procured in time for that purpose, and such others as will be procured successively for the same use.

3. He will also be provided with the proper means of safe conveyance of these instruments and other objects, either by land or by water, according to the arrangements which he will make at proper times for that purpose.

4. He will receive the assistance of such officers, cadets, midshipmen, or other men of the military or naval service, as will be appointed upon his request, and who will be provided with all their necessary field equipments, &c.

5. All the assistants and men, military, naval, or civil, that will be appointed for this service, will be ordered to conform to his instructions and directions, and, in case of their refusal, he will have the liberty to order them to report for other services, or dismiss them.

6. He will have the sole and free disposition of the carriages or other means of conveyance, and other objects or implements appertaining to the equipments for this work.

7. He will be provided with tents for the instruments and for the accommodation of himself and his assistants, with the necessary tools for preparing stations, placing signals, and the other necessary works for the encampment on the stations, and mending implements, &c., that might be in

need of it, the necessary means for signals, and for the preservation of the stations of the survey.

8. One of the assistants will act as accountant for all public expenses made upon the orders of Mr. Hassler, and will receive from the appropriations made for the survey such sums, at different times, as shall be agreed upon. He will account for them, at stated times, to the Treasury Department, for which service he will receive a compensation.

9. All drawing, plotting, execution of maps, or such like, will be done by the assistants, upon Mr. Hassler's orders, either in their private quarters or in an office, as may be judged best adapted to the case; the office expenses will be paid by the accounting officer, on public account.

10. All the stationery needed in the work, as well for Mr. Hassler as for any of the assistants, will be provided by the accounting officer, at public expense, in the field or at home.

11. Officers or engineers, detailed out by Mr. Hassler for separate works, of detail parts or others, will conform to the instructions which they will receive from him upon their work; they will be furnished with such instruments, implements, and assistance, as he will direct; and their expenses of a public nature will be accounted with the accountant above stated. They will report to Mr. Hassler, as he will direct; for such works they will receive adequate compensation.

12. Mr. Hassler will receive, for compensation of his services, $3,000 per annum, and in lieu of his private personal expenses $2,000 per annum, to be paid together quarterly, upon his draft, bill, or otherwise, unless, in the progress of the work, he should be obliged to make voyages at greater distances, when an allowance, by the way of mileage, will be determined.

13. Mr. Hassler will be provided with an ostensible public paper, stating his employment, and the nature and object of the same, to support him in his actions and transactions in any part of the country he may have to go for the purpose of his work, to serve equally for his assistants and the persons employed under him.

F. R. HASSLER.

WASHINGTON CITY, *August* 6, 1832.

Instruments, implements, and assistance required.

1st. These cannot be very essentially different from what they were in 1817. In the present state of the instruments and their accessories, it will be best to give them under detailed inventory, as stated in its place, to the disposition of the chief of the work, to take the best advantage of them that they will afford, to have them put in as good order as possible, and to allow him to replace the missing accessories as best he can.

2d. The carriage made purposely for the transportation of the principal instruments was sold, but is yet on hand, and can be made serviceable until a new one may be constructed, which would most likely delay too long at present. For the other parts of the transportation it will be easy to get a Jersey wagon, as has been used before.

3d. Horses and harness it will be necessary to purchase—the first strong and sure; the second simple, but strong. The mode of transportation of the instruments by a proper carriage, made of a size exactly to serve as a box

for them, and upon springs and thorough-braces, has been found more secure and economical for this country than the transportation by hand. It admits, therefore, also, to reduce the number of laboring hands for the work of the triangulation.

4th. The whole party in the work must be supplied with the necessary tents for their encampment in the field, and other necessary field equipments, besides axes, pickaxes, spades, and other tools, required for the placing of signals, preparing stations, and keeping every thing in good order. (I have even always such tools with me as are proper for keeping the instruments in good order, and repairing lighter accidental damages.)

5th. It must be observed, that the proper provision and arrangement of the accessories, and even the ease of an observer, are essential elements of accurate observation, as well as attentive and intelligent assistants; both favor the unimpeded and proper progress of the work, and are therefore essentially economical. A defective state of these parts is very detrimental.

6th. It is expected that none of the chronometers will be in a serviceable state; that defect may be supplied by the loan of a second-pendulum clock at West Point, (of Troughton's arrangement,) made expressly for transportation, which is not expected to be in use there; even a circular instrument of Troughton's, which is there, most likely in the same predicament, might be borrowed with advantage for the secondary triangles mentioned in the proper place.

7th. The selection of the assistants, in officers or other able men, must of course belong to the chief of the work, who will recommend them, and they will receive their appointments from the Department, but, if necessary, removed upon the proposition of the chief of the work. For the present first beginning, to execute the part stated for the immediate work, three such persons will only be required, whom I wish to name, besides what accidental help I shall have to call my son in for, on account of his acquaintance with the former work.

8th. The number of laboring men will vary at different times. When the base lines are measured, fifteen to twenty will be required for the simple triangulations, particularly that proposed at present in completion and extension of the triangulation made in 1817. Six or seven may be sufficient, besides the drivers for the carriages and what may be needed for detail triangulations, if they are undertaken simultaneously.

9th. The best manner of getting this part of the assistance in laboring men is to take them from the military, where they may be easily spared from some garrison or other. Their habit and regulation of discipline, and their being placed under the order of an officer, introduces much easier the necessary regularity, and they stand for their conduct under proper regulation.

10th. The pay and maintenance, in every respect, of the officers and men taken from the army and navy, is in all cases to be provided for and paid by the army corps to which they belong, or the navy in general, according to the regulations in which they otherwise stand; so, also, they will receive all their equipments. They must, in general, be considered as coming to this service in the same manner as to any other in their line to which they might be ordered.

F. R. HASSLER.

WASHINGTON CITY, *August* 6, 1832

TREASURY DEPARTMENT, *August* 9, 1832.

SIR: With the President's approbation, you have been appointed to make, under the superintendence of this Department, the survey of the coast of the United States, directed by the acts of the 10th February, 1817, and 10th July, 1832.

The act last mentioned having authorized the employment of other persons as well as those in the land and naval service, such assistants, of either description, as may be necessary in the work, will be provided at your request.

Funds will be placed, from time to time, upon your requisition, in the hands of one of your assistants, to be disbursed for such expenses of a public nature as may be properly chargeable to the appropriation for the survey of the coast, and he will render his accounts, approved by you, quarterly, to the First Auditor.

Those expenses of the persons in the military and naval service employed in the survey, which are chargeable to military and naval appropriations, will be defrayed by the officers of the respective Departments, and accounted for under the direction of those Departments.

You will receive, in full for all your services, a compensation at the rate of $3,000 per annum, and, for all your personal expenses, an allowance at the rate of $1,500 per annum, payable quarterly, to commence on the 2d of August, 1832, you having been employed since that time in the necessary arrangements of the instruments and other preparatory works. It is to be understood, however, that you will still continue your services in the construction of weights and measures for the custom-houses, as far as may be compatible with your duties in the coast survey, without any other compensation than what is allowed for the coast survey.

In all other respects than those indicated by this letter, the terms and nature of your employment will be the same as were fixed by the letter addressed to you by this Department on the 3d of August, 1816.

The plan of operations and methods formerly adopted by you in the coast survey having been approved of, you will recommence and continue the work in conformity with them, including such modifications as are suggested in your report of the 6th instant.

I am, respectfully, your obedient servant,

LOUIS McLANE,
Secretary of the Treasury.

F. R. HASSLER, Esq.

WASHINGTON CITY, *August* 12, 1832.

MOST HONORED SIR: I have the honor to acknowledge the receipt of your favor of the 9th instant, by which you are pleased, with the authorization of the President, to give into my charge and direction the important national work of the survey of the coast of the United States, with a compensation of $3,000 annually for my services, and an annual allowance of $1,500 for my personal expenses, to begin from the 2d instant.

I am too well aware of the great importance of the work, its exigencies and nature, and the magnitude of the task, not to appreciate duly the value of the confidence you place in me by this trust. I shall call up all my exertions to prove these feelings, by conducting the work in a manner as

honorable as permanently useful to the country; for which it presents so valuable means, that I feel highly honored by the occasion thus given to me to contribute my exertions toward such an aim.

The diminution of the allowance for my personal expenses, from what they had been rated at in my first appointment in 1816, is not such that within the limits of such estimations, made beforehand, its effects could be distinctly foreseen; I could only say, that while I was in activity in this work in 1817, my annual expenses in my absence from home amounted to about $2,000. What effect the now somewhat changed prices of things may have in this respect is of course impossible to foretell; therefore this is so much less an objection with me, as in any case I am certain it is not the intention of the Government to put me to pecuniary loss, and that, therefore, in case it should be found appropriate, this part may easily be modified to the exigency of unforeseen circumstances.

I shall also attend to the standarding of weights and measures, in which I have hitherto been engaged. I have taken such arrangements as will enable my assistant in it, Mr. Schmid, to prepare the works to the last stage of their adjustment, which I shall then make myself next winter, after my return from this year's field work in the survey. His acquaintance with the subject, and his practice in that part during his presence in all my former operations, render him fully capable to the task; and his work will abridge mine so as to bring the necessity of my personal attendance within such limits of time as will be compatible with my work in the survey.

With thanks for the honor of your confidence, I remain, with perfect respect and esteem, most honored sir, your most obedient servant,

F. R. HASSLER.

Hon. Louis McLane,
Secretary of the Treasury of the United States.

[From the North American Review of April, 1842, p. 446 *et seq.*]

ART. VIII.—*Letter from the Secretary of the Treasury, transmitting a report of F. R. Hassler, Superintendent of the Coast Survey, showing the progress made therein up to the present time.* (*Doc. No.* 28, *House of Representatives,* (*Treasury Department,*) 27*th Congress,* 2*d session.*

By this valuable communication, as well as by information, reaching us from various sources, we are warned that the great public work of the survey of the coast is in danger of being again abandoned, or, what we should regard as still more unfortunate, of being superseded by some other plan of operations.

In a former number* we presented a concise view of the nature of geodesical operations, and of the principles upon which they are based. The remarks there made upon the subject we conceived were sufficient to show the futility of any scheme for arriving at the perfect knowledge of any extensive portion of the earth's surface, for constructing a map, or correctly determining and connecting a number of distant situations, by any other rules of procedure than those which the science of geodesia prescribes. They also afforded some data for a comparison between the American survey, as far as it had then proceeded, and similar works in Europe; such as, whether applied to the progress or the character of the work, might well gratify national pride. Our present purpose is to submit a few remarks, not of a character to interest the scientific reader, but designed rather to arrest the attention of men, who being necessarily uninformed upon matters of strict science, are nevertheless called upon in their high places to exercise judgment, and exert authority, upon questions in which the highest science is involved. It is our present aim to secure a clear and impartial investigation; to correct misrepresentations; to counteract the designs of scheming speculators; to defeat, if necessary, the instigations of ill will; and to uphold the scientific reputation of the country, which is in some measure dependent upon the successful prosecution of this great national undertaking.

The question first in importance with regard to the coast survey is, whether any other mode can be adopted—this mode having for its object the greatest amount of useful information, in the shortest time, and at the least expense. In discussing this question, so much has been said, and is still urged, concerning the use of chronometers, and the substitution of them for the present system of triangulation, that it seems worth while to say a word upon this subject, premising, that the serious consideration we here give to it does not arise from any idea of the value attached to such a suggestion in the minds of scientific men.

The chronometer in the hands of modern artists has, it is true, attained a degree of excellence which admirably adapts it to the general purposes

* See North American Review, vol. XLII, p. 75 *et seq.*

of navigation, and supplies to seamen the most useful means of solving the problem of longitude. Still it is far too imperfect an instrument to be relied on implicitly. It possesses an inherent and constant liability to error; and although its accuracy may be preserved through any short period, this liability is so multiplied by time, and the chances of accident, as to deprive even those which are most carefully constructed of all claim to perfect confidence. In cases where their use is indispensable, as in detached and local surveys, in the cursory examination of distant and inhospitable regions, or in carrying a chain of longitudes around the globe, and generally where strict and careful measurement is for any reason forbidden, their imperfection is in some measure remedied by numbers. Acting as checks upon each other, the amount of error is reduced, and the observer is enabled to fix, with a degree of precision sufficient for the security of ordinary navigation, the simple position of certain points and headlands. This, however, is regarded only as the palliation of an evil; the evil itself is fundamental, and admits of no complete remedy.

In determining differences of time between meridians widely separated, chronometers have sometimes proved remarkably successful, and have exhibited results of surprising accuracy. The reverse of this proves to be the case in the adjustment of minor differences, where the essential defects of the instrument are particularly displayed. There is no space, however small, of perceptible magnitude, which may not be submitted to trigonometrical measurement; but it will be readily understood, that there are points, at minute distances asunder, between which no difference of local time can be estimated. If it be asserted, which we are by no means prepared to admit, that such distances are unimportant in a geographical view, it will appear that they are of the highest topographical value when we come to consider the character of our Southern coast.

If chronometers, however, could be implicitly relied on, and the determination of longitudes by means of them admitted of greater exactness, still it is to be borne in mind that their use, in connexion with the sextant, goes so far only as to decide a certain number of fixed points.

This cannot in any strictness of language be called a *survey*. It still remains to fill up the intermediate spaces by some sort of measurement, and the mode and result of this operation are questions of serious importance. We need not enter into any detail to show that a survey of this kind must content itself with the bare outline of coast, harbors, islands, &c., neglecting all the valuable details belonging to physical and statistical geography, differences of level, and the distribution, limits, and peculiarities of the country under inspection, all of which are included in the operations of a geodesical survey.

We are told that despatch is one of the recommendations of the chronometric plan. Numerous parties will probably, therefore, be immediately employed, and it will remain afterwards to harmonize their labors by joining the distant points of observation. To do this, will, we conceive, be no easy task; and, if such a plan be adopted, we shall not be astonished to learn hereafter that the attempted meeting of these unconnected operations is likely to break up in the most admired disorder.

We do not mean, in any thing we have said, to underrate the value of chronometers in their legitimate sphere. They might, undoubtedly, be advantageously employed in the preliminary determination of important points on the coast, which are known to be erroneously laid down.

Their accuracy may be depended upon within a mile, and even this imperfect knowledge will be in some degree a relief to navigators, where errors of alarming and uncertain magnitude are known to exist in their charts. Mr. Hassler has, in his letter to Mr. Gallatin, given to this proposition all the consideration it merits.* If such occasional use should be made of them, and the present system of survey should be continued, subsequent comparisons will abundantly prove, that even the simple determination of geographical positions by chronometers (omitting all question of a connected survey,) however skilfully and expensively conducted, is unavoidably defective.

In a matter that may be subjected to rigid mathematical investigation, results are anticipated, and conclusions distinctly enunciated. But perhaps it will enforce our argument to exhibit some facts that have immediate relation to the present inquiry. We select such as are nearest at hand. An attempt was made to determine the place of the Capitol, by means of chronometers, by Mr. Paine, of Massachusetts, a gentleman distinguished for his zeal and ability in these calculations. He carried three chronometers from Boston to Washington, through Philadelphia, and back, observing the difference of meridians of the three cities, both going and returning. The results of these are spoken of as important. The difference of his two longitudes of Washington, by Philadelphia and by Boston, is 14.″25. The difference between the mean of his observations and the adopted longitude of Washington is 12.″9; whilst Mr. Paine's longitude of Washington differs from the mean of seven results of astronomical observations, solar eclipses, and occultations, by 41.″4.†

In the trigonometrical survey of the State of Massachusetts, begun in 1831, and concluded about a year since, embracing a territory of 8,230 square miles, we find an exemplification of our argument at once pertinent and conclusive.

A letter from Mr. Simeon Borden, the superintendent of this survey, to the American Philosophical Society, in addition to an account of the work, gives a "comparison of his own results with those obtained by Robert Treat Paine, Esquire, from observations with a Troughton's sextant and mercurial horizon, and chronometers transported to different stations."

In the longitude of Pittsfield the chronometers exhibit a difference of 28.″98, nearly one half of a mile; yet thirty-nine chronometers were used in thirteen journeys. The meridians of Cambridge and Dedham are 3.′30.″43 apart by trigonometrical measurement; the chronometers give the difference of longitude 3.′11.″10, making an error of 19.″33. In the case of Cambridge, twenty chronometers were used in six journeys, and in that of Dedham twenty-three chronometers in seven journeys. Gloucester and Plymouth, both seaport towns, which ought therefore to be known correctly, coincide in longitude within 2.″10. The chronometers have increased that difference to 8.″55. This instance illustrates what we have before said of the incapacity of chronometers to note minute differences of local time with the requisite accuracy.

Williamstown, where twenty-eight chronometers were employed in ten journeys, is placed 19.″24 to the west of its true position. We have al-

---

* *American Philosophical Transactions*, new series, vol. II, pp. 238, 239.

† *Determination of the longitude of several stations*, &c., reported by Sears C. Walker. See *American Philosophical Transactions*, vol. VI, p. 265, *note*.

ready remarked, that Pittsfield is 28."98 in error. The sum of these two variations is 48."22, or eight-tenths of a mile, and one-third nearly of the difference of longitude of the two places.

The longitudes of Williamstown and Dedham, as decided by the chronometric method, present a discrepancy of 29."32, or one-half a mile nearly. Fifty-one chronometers, in seventeen journeys, were used to fix the position of these two towns. Other instances might be added to this list, but the table of comparative *latitudes* demands a passing notice.

The determination of this element, as is well known, is much less liable to error. A combined difference of 9."86, or one-sixth of a mile, appears in the latitudes of Boston and Squam light; and here the industry of Mr. Paine accumulated no less than four hundred and eighty altitudes for the determination of these two places. Three hundred and ten altitudes place Amherst 8."70 south of Cambridge; but an error of 4."80, more than one-half the difference of latitude, is proved in these observations, by Mr. Borden's measurement.

The two greatest errors in this table are 7."30 and 7."81, the sum of which makes the possibility of error amount to 15."11, or one-quarter of a mile.

We will add one more case. Mr. W. C. Bond, the distinguished astronomer of Harvard College, whose remarkable accuracy and skill in the use of instruments place him by the side of the best European observers, says, in a paper now before us: "In June, 1839, I had observations with a transit circle, the illuminated end of the axis east and west, on the 16th, 17th, 20th, 21st, 23d, 24th, and 25th. These observations gave for the latitude of the instrument, 42°.19.'16."9." Reduced by the measurement of Mr. Borden, they determine the latitude of the State House, in Boston, to be 42°.21.'30."3'''. Mr. Paine's observations with the sextant and artificial horizon give 42°.21.'22."7'''. Four hundred and forty-two altitudes were taken by Mr. Paine, yet these insufficient instruments, in the hands of one perfectly skilled in their use, and guarded as far as possible against error by multiplied observations, fall short of the truth 7."6. Mr. Borden's latitude of the State House differs three-tenths of a second from that of Mr. Bond's.* The comparison of the precision of the two methods afforded by the Massachusetts survey is highly favorable to sextants and chronometers. It would be too tedious and expensive to apply to a great extent of territory, including a large and indented sea coast, the reiterated and laborious processes of Mr. Paine.

The survey of a portion of the earth's surface is a work which comes within the domain of the mathematics. It may safely be said that any determination of a place, in which the mathematical theory is disregarded, must be fundamentally defective. A reference to this theory brings us to an argument which, we trust, no misapprehended views of science, and no preconceived notions of utility or expediency, will overlook.

The system of triangulation, conducted upon the principles in physics which direct this department of science, takes into consideration the spheroidal form of the earth, and enables the surveyor to construct such a map of that portion of the spheroid which is comprised in his labors, as will be an exact representation of its real figure. This mode of surveying, and this only, regards the earth as it actually is, in its irregularly elliptical form,

* *Proceedings of the American Philosophical Society*, May and June, 1841.

delineates its surface correctly, and treats of the true measure and configuration of the planet on which we live. Topography, and many of the details of physical geography, come within its province; as the courses of rivers, the direction and elevation of mountain ridges, the nature of the land, &c.—knowledge which is essential to the defence of the coast, to the construction of fortifications, and to all the duties of the military engineer. It furnishes the most accurate and convenient bases, from which a network of triangles may be thrown over any of the States through which it has passed. Some of them have already united their local operations with the general survey, to their great advantage. We may add, finally, in relation to this topic, that, when we are called upon hereafter to make our contributions to the common treasury of similar knowledge, this work will supply the requisite data for the measurement of degrees on the earth's surface, and for the "accurate determination of the elements of the terrestrial spheroid."

It promises also to be of especial value in giving future security to the intricate navigation of the Southern shores, a part of the coast of the United States rendered particularly dangerous by numberless reefs, shoals, and sandspits. It is well known that these are variable in their limits and condition, gradually forming in some places, and in others changing their extent and direction, under the influence of violent winds and strong currents. In order to acquire a permanent and useful knowledge of their character, and to provide an accumulation of facts that will lead to an understanding of their probable formations, dispersions, and changes, a certain knowledge of their present state is indispensable, beyond that which can be reached by sextants and chronometers. Rigorous observations upon these and similar subjects in Europe, by geologists and other men of science, have resulted in great benefits to navigation.

The increasing commerce at the South, the future establishment of naval stations there, and the close and hazardous sailing that must be pursued, both by merchant vessels and men of war, in the event of foreign aggression, make it desirable that the *in-shore* navigation of the Southern coast should be well understood.

We have already shown what degree of reliance may be placed upon the chronometer under favorable circumstances and in skilful hands. We are justified, we believe, in saying, that longitudes by chronometers cannot generally be relied upon as correct within less than one mile. But shoals of light and unstable sand, beaches widening and narrowing, and downs accumulating and dispersing, under the action of local and general causes, demand accurate measurements of feet and inches, by means of which the operations of nature may be carefully studied, future obstructions be prevented, present ones be removed, if possible, and an effectual security be given to the pilotage of the Southern coast. A trigonometrical survey, made with all the fidelity that the improved state of the science ensures, is the only method adapted to the attainment of all these desirable objects.

Some complaint has been made against the superintendent of the coast survey, because its results have not been published, from time to time, as they have been determined. The power and duty to direct both the manner and the time of their publication rests with Congress, and to that body such a complaint may be appropriately referred. A full and sufficient reply to this charge is contained in the report. We may add here, however, for general information, that engravers are now employed upon the first sheets, which will probably be issued in the course of the coming summer; and,

if the work is continued, the publication will hereafter take place regularly, as the plates come from the hands of the engravers. When these charts, executed with precision and elegance, under the sanction of public authority, are produced, we shall, for the first time, be able to look upon similar works, contributed by the English and French Governments to the safety of commerce and navigation, without envy and shame.

Much is said of the expense of the survey as at present conducted. In this matter we are not particularly careful to answer. An honest and prudent appropriation of the public money we are willing to leave in the hands of those to whom it is legally intrusted. In this case, at least, we may be contented to confide in their integrity. Economy, it is true, is a virtue; but mere saving is not always economy—it may be the most imprudent waste; and, being satisfied of the paramount importance of this work, both to the public interest and to the national honor, we might say, without further comment, that it should not be interrupted. It is in accordance, however, with our previous remarks, to add, that this is one of those cases in which economy is not identical with retrenchment. If chronometers possess in themselves an insurmountable tendency to error, the survey undertaken by their means, and dependent on their results, is not likely to be ever completed. What is certain to-day may be doubtful to-morrow. Subsequent observations may bring discredit upon those which have gone before; and it is to be apprehended, that, however multiplied they may be, so far from ultimately removing the difficulty, they will only serve to strengthen doubt and increase perplexity.

Besides this, experience will prove that the repeated transportation of numerous chronometers will be attended with but little less expense than a regular and scientific survey. As some ground for this opinion, we shall refer again to the high authority of Mr. Paine. In a letter to the *Bureau des Longitudes* at Paris, he gives the longitudes of several towns in Massachusetts, the results of his own observations, and adds:

"These longitudes have been generally determined by the transportation of time repeated several times with numerous chronometers. Thus, between Northampton and Boston, I have carried seventy-four chronometers in twenty-four journeys; between Amherst (the college) and Boston, or Northampton, twenty-seven chronometers in nine journeys; between Barnstable and Boston, fifty-nine chronometers in sixteen journeys; and between Gloucester and Boston, sixty chronometers in sixteen journeys."*

We have here an example of the manner in which chronometers are employed in the hands of a skilful observer. In estimating their use for a survey of the coast, the additional risk of transportation by sea is to be added to this account.

The financial department of the coast survey does not, however, present any thing so startling as to render these statements necessary for its defence. They are in themselves valuable facts and considerations, tending immediately to elucidate the subject, and weighing heavily against the proposed change; but they are not, we imagine, essential to vindicate the present plan of operations from a suspicion of waste and extravagance.

Since the year 1832, sixhundred and twenty thousand dollars have been appropriated to this service, one hundred and twenty thousand dollars of

* *Connaissance des Temps*, 1843. Additions, p. 95. The *Additions et Corrections sur les Tables des Positions Géographiques*, by Mr. Daussy, will repay a critical examination.

which remains on hand, in the form of vessels, instruments, and other property, leaving a balance of five hundred thousand dollars to be charged to the survey. When we consider that this expenditure extends through a period of ten years, that it has been bestowed upon a great national work, of the highest importance to the commerce and defence of the country, that it is a contribution to knowledge, and that its investment in this way has gone further than any thing yet done to establish the character of the country abroad for a liberal patronage of science, we are not disposed to regard it as an expense which the strictest economist may not approve.

As to the amount of money and probable length of time required to complete the survey, we cannot do better than to say, that these questions are ably and properly treated in the documents before us. "With the advancement of the mathematical and physical sciences, the means of acceleration of any work grounded upon them also increase. All that is needed is, that the whole work be carried on in the most economical manner." (p. 11.) We are satisfied that its progress will compare favorably with that of any similar work in Europe; and we are not willing to be behind the old world in accuracy, and in honorable and permanently useful results.

The course pursued has already met the approbation of men abroad eminent in science, and practised in such works, whilst at home the survey has more than repaid the sums drawn from the Treasury by the benefits it has conferred upon two of the largest commercial cities, New York and Philadelphia. It ought to be a sufficient argument for its continuance, that it has discovered what other operations, though often repeated, failed to find out; and its success here was owing to strict conformity to the principles of surveying, which alone a severe science recognises. It is needless to say, that the duration of the work is indefinitely protracted by the frequent interruptions to which it has been subjected. If it were permitted to enjoy the friendly, and intelligent patronage of Congress and the Government, the greatest number admissible of assistants would be employed, and all the rapidity of execution consistent with accuracy would be secured. Mr. Hassler has given a list of similar works which have been executed, and are now in progress, in Europe; from which it appears that not only flourishing kingdoms, but even petty principalities, have made their triangulations. When we contemplate the wealth, extent, and dignity of this vast empire, we feel that the hope is not unreasonable which looks for enterprises suited to its condition. But science, which knows no limits either of power or national boundary, finds a home among the thrones and insignificant dominations of Italy and Germany; and, if it be rejected from the councils of this nation, will confer upon their humble princes a distinction before which we must be content to bow. The abandonment of this work will not fail to be regarded in Europe both as a calamity and a dishonor. The impress of instability, which seems to be stamped upon every public measure, might at least be removed from this, in which all parties and all prejudices may unite and harmonize. The survey of the coast has already created a distinguished school of topographical and hydrographical engineers, thus overcoming one of the early difficulties in the undertaking; it will further contribute to erect a standard of science, the practical value of which we cannot now discuss. Should some other mode be adopted for the time, there can be small doubt that the present method, the only one which strict science approves, will be hereafter resumed; and "the chances

of an accumulation of errors upon such a long extent of sea coast as that of the United States, particularly in the direction in which it lies, will be too great, and the consequences of a want of system and care too glaring, not to bring discredit and shame upon a less accurate operation."*

---

* *Papers relating to the Survey of the Coast. American Philosophical Transactions*, new series, vol. II, p. 400.

THE

COAST SURVEY.

AN ARTICLE FROM THE

PRINCETON REVIEW,

FOR

APRIL, 1845.

By JOSEPH HENRY, LL. D.
PROFESSOR OF NATURAL PHILOSOPHY IN THE COLLEGE OF NEW JERSEY.

PRINCETON, N. J.

PRINTED BY JOHN T. ROBINSON.

1845.

9

THE

COAST SURVEY.

AN ARTICLE FROM THE

PRINCETON REVIEW,

FOR

APRIL, 1845.

By JOSEPH HENRY, LL. D.
PROFESSOR OF NATURAL PHILOSOPHY IN THE COLLEGE OF NEW JERSEY.

PRINCETON, N. J.
PRINTED BY JOHN T. ROBINSON.
1845.

Blank page retained for pagination

COAST SURVEY.

Our readers who are in the habit of perusing the proceedings of congress, must have seen frequent notices of the important work now in progress in our country, called the Coast Survey. Yet from the tenor of the frequent inquiries we have heard in reference to this work, we are led to believe that there exists in the public mind generally no very definite idea of its nature and importance. We have therefore thought that a few pages of our review devoted to a popular exposition of the objects, the method of operation, and the history of the survey, would not be uninteresting to our readers; and perhaps be of some service in the way of enlisting public opinion more generally in favour of the work, and of a liberal appropriation of means for its proper and speedy completion.

The principal object of the coast survey is the formation of an accurate map of the outline of our extended seaboard, from its northern extremity in the state of Maine, to the limits of our possessions on the Gulf of Mexico; giving the latitude and longitude of the principal points, a minute delineation of the line of the shore, a sketch of the topography of a slip of country parallel to the coast, an exact representation of the form of the bottom of the sea, within the space limited by the depth accessible to the ordinary sounding-line, the nature of the bottom, whether of clay, sand, or gravel, the position of bars, channels, and harbours, the direction and velocity of currents, the depth and temperature of the water, the bearing of the magnetic needle, and all other particulars immediately connected with the wants and improvement of navigation. In the accurate determination of these points of immediate practical utility, a number of results in the highest degree interest-

* 1. Principal Documents relating to the Survey of the Coast of the United States since 1816. Published by F. R. Hassler, Superintendent of the Survey. Two vols. 8vo. New York, 1834.

2. Executive Congressional Documents since 1832.

3. First report of Professor A. D. Bache, Superintendent of the Coast Survey, showing the Progress of the Work during the year ending November, 1844.

ing to science will also be obtained: such as new data for calculating the form and magnitude of the earth; the variation of terrestrial gravity; additions to our knowledge of the phenomena of terrestrial magnetism, and other facts of a purely scientific nature, which are regarded with the highest interest by the learned, in every part of the world.

The importance of such a survey must be evident to every one who reflects on the nature of the art of navigation, and its connexion with the commerce, and consequently with the prosperity of our nation. It is not, however, a work in which this country is alone interested, but one which affects the whôle civilized world. It is a duty which every nation owes to every other, and to humanity in general, to furnish the mariner with an authentic delineation of its coast. The dangers which threaten the sailor in the midst of the wide ocean, are nothing in comparison with those which beset him as he approaches the land. With 'a sea-worthy' vessel, and a wide space for unobstructed motion, he can laugh at the winds and the waves even in their greatest power; for these, however formidable they may appear to the inexperienced landsman, are formed of yielding materials, and usually spend their force in merely changing the direction of the vessel, or in urging it more rapidly on its way; but the mere suspicion of a sunken rock, the position of which is not precisely known; or the unexpected appearance of a breaker, is sufficient to strike with terror the mariner who would brave unflinchingly the lightning and the tempest. The alternatives of life and death, of wealth and poverty, are almost every day unavoidably staked by some one on his precise knowledge of the position of a head-land, a sand bank, or the true direction of the needle; and culpable must that nation be in the eyes of the world, who boasts of civilization, and yet does not furnish the data for an accurate knowledge of this kind.

According to the statement of a journal of the day, the truth of which we have no reason to doubt, two hundred and eighty vessels were wrecked during the last year on our coast, in which one hundred and eighty lives were lost, together with an immense amount of valuable property. Several of these vessels were, without doubt, strangers from foreign countries, allured to their destruction by the false representations of existing maps. The sailor, in his approach to our coast, has hitherto been obliged to depend on the imperfect charts founded on the surveys of the British government while we were a colony, with the exception of the local charts furnished by the energy and enterprise of Messrs. Blunt of New York, and

the surveys of particular places by the United States' corps of engineers. The consequence to ourselves of any unnecessary delay in completing the coast surrvey, must be to deprive us for the time, of a knowledge of the important points of our sea-board for the establishment of new harbours, roads and channels, of the means of improving our state of defence in time of war, and of lessening the risk of the lives and property of those of our citizens engaged in commerce; as well as to degrade our national character in the estimation of all civilized nations.

The importance and necessity of an accurate knowledge of all the particulars we have mentioned, as the principal objects of the coast survey, will be evident from a brief account of the method employed by the mariner in his approach to the land. When the weather will permit, he determines his latitude and longitude by celestial observation; from a knowledge of these, he marks his position on the chart, and from this ascertains the course and distance of his destined port, with a knowledge of all the shoals, currents, and obstructions of every kind which may lie in his way. Or if, as is often the case, in approaching land, the sky has been obscured for several days, and the anxious sailor is uncertain as to his "reckoning," he must then have recourse to soundings. The number of fathoms of the line, and the kind of soil, whether sand, clay, gravel, &c., which adheres to the greased end of the deep sea-lead, being found to agree with the indications of a definite spot on the map, this is adopted as the position of the ship, and from it the bearing and distance of the yet unseen land is determined. Now, if the chart be incorrect with regard to the relative position of the several places, the variation of the needle, the situation of bars, &c., or, in reference to the nature and depth of the bottom, dangers of the most imminent kind will await him. A national coast survey must therefore be as accurate as the existing state of science and the arts will permit it to be. An incorrect chart, published under national authority, may in many cases be worse than useless, since it may tend to inspire confidence of safety, and thus serve to repress the vigilance of the mariner, while he is surrounded with danger.

The ordinary methods of land surveying, are entirely inapplicable to a work of this kind. It is impossible to combine together the results of the partial surveys of small districts so as to produce an uniform and consistent whole. The length of a line of forty or fifty miles, extending from one jutting point to another, across the water, is often required within a limit of error which does not exceed a few feet, or perhaps

inches; and the position of points must be determined at the distance of many miles from land, to serve as the bases of the sounding operations. The only method which can be employed to obtain accurate results of this kind, is one in which lines and angles are measured by means of trigonometry, combined with astronomical observations at the more important points. This method constitutes a branch of physico-mathematical science, to which the name of geodesy has been applied. Its origin is to be referred to the attempts of the astronomers of Alexandria, to determine the form and dimensions of the earth; but it has only been brought to any degree of perfection since the middle of the last century, by the labours principally of the English and French surveyors.

The general principles of this method of surveying, will be readily understood by a reference to the annexed diagram. 1. In a convenient level place, a line, represented by

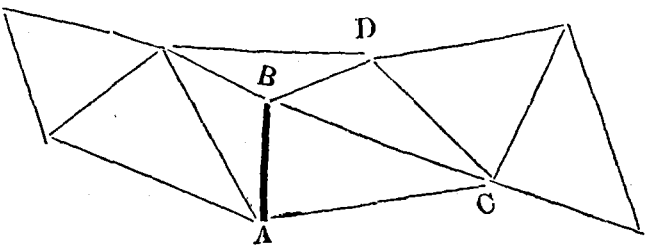

AB, of several miles in length, is accurately measured. This line, which is the foundation of all the subsequent operations, is called the *base line.* Starting from it on either side, the surface of the country is divided into triangles, by erecting signals on elevated points, properly chosen, until the whole length and breadth of the space to be surveyed is covered with a network of triangles. The angles of these triangles being measured, the several sides can all be accurately deduced by calculation from the measured base. For example, the angles at the points A, B, C, being known, and the base AB measured, the sides AC and AB can be calculated by a simple rule of trigonometry. Again, the angles of the triangle CDB being measured, and the side CB being known from the last operation, the remaining sides CD and DB can be readily determined; and in like manner, the length of the several sides throughout the whole series, may be obtained. A system of triangles thus connected, and of which the sides, in some cases, are more than fifty miles long, is called the *primary triangulation.* It is intended to fix, with much more accuracy than could be

attained by direct measurement, the relative position of the most important points of the survey. 2. The next step in the operation, is to divide, by a similar process, each of the larger triangles into a number of smaller ones, which may serve to determine the more important intermediate points, and form the bases of the minute survey, to which the whole surface of the country is submitted, as well as that of the bottom of the sea contiguous to the coast. This system of smaller triangles is known by the name of the *secondary triangulation.* 3. Connected with the primary triangulation, a series of astronomical observations are made for ascertaining the latitude and longitude of the principal points, the result of which may serve to check the triangulation, and establish on the chart the parallels of latitude, and meridians of longitude. Such a survey is susceptible of great accuracy, and possesses within itself the data for its own verification. First, the accuracy of the measurement of each triangle can be immediately verified by the well-known theorem of geometry, which declares that the sum of the three angles of every triangle must be equal to 180 degrees; and secondly, the lines, and indeed the whole operation, can be verified by measuring one side of a triangle in a distant part of the survey, and comparing the result thus obtained, with the length deduced by computation from the original base. If the two agree within a few inches, the work is considered correct.

It might appear, at first sight, that the process here described, is one of no great difficulty of execution, and that it could be safely intrusted to men of ordinary scientific acquirements. Indeed, such an opinion has been expressed in congress: but nothing can be further from the truth; and any line of policy in reference to the coast survey, founded on this opinion, would be attended with the most disastrous consequences to the success of the work. Every error of measurement or of observation, every fault of calculation or omission of circumstances, is increased and multiplied as the survey is extended, until they amount to discrepancies utterly inadmissible in an operation of this kind. To insure, therefore, the requisite degree of accuracy, all the resources of physical science, and all the appliances of the mechanic arts, must be brought into requisition to meet the difficulties which present themselves from time to time, under the constantly varying circumstances. The truth of these remarks will be evident from a more minute examination of some of the processes of the survey.

To measure a base line, may appear a simple and easy op-

eration; and this is the case where no minute degree of accuracy is required, and when the line is of no considerable length: but in a large survey it forms, perhaps, the most tedious part of the work, and under the most favourable circumstances, presents difficulties which never fail to call forth the scientific resources and inventive powers of the operator. Although a bar of metal at rest on the ground, may appear to have a fixed and unalterable length, yet we find, on examination, that it is almost constantly in a state of change, expanding or contracting continually with the varying temperature of the day and the season. A line of six miles in length, measured in mid-winter, with an iron rod, would appear about eighteen feet shorter, if measured again during a warm day in summer, with the same instrument: the temperature of the measuring rods must therefore be carefully noted, and the expansions and contractions allowed for. In the measurement of the base, near London, for the trigonometrical survey of England, deal rods were at first used; and although these were made of well seasoned timber, and carefully varnished, yet the changes in their length, produced by the moisture and dryness of the air, were so considerable, that all confidence in the results deduced from them was taken away. Glass rods of twenty feet in length, and supported in wooden frames, were afterwards substituted in the place of these. In the American survey, under the direction of Mr. Hassler, the whole measuring rod consisted of an assemblage of four iron bars, each of two *metres* (39.4 inches) in length; these were clamped together and supported in a wooden trough, prepared for the purpose; the bars had previously been accurately compared with a copy of the French standard, which had been obtained by Mr. Hassler, in 1799. It also requires no inconsiderable skill to place the rods in two consecutive positions in a straight line, and to make the beginning of the one exactly coincide with the ending of the other. In the French and English surveys, the latter object was attempted to be effected by the simple contact of the ends of the rod with a fixed obstacle, while in the American survey, the same object was more accurately attained by an optical contact. For this purpose, a hair was stretched across a semicircular opening at the end of the bar, and made to coincide with the image of the intersection of two lines drawn on a plate of ivory attached to a microscope, which was itself fixed for the time on a stand entirely separate from the support of the rod. The microscope remaining undisturbed, the rod was carried forward to a new position, and the hair stretched across the opening in

the hinder end made to coincide with the same point. The microscope was next moved forward and adjusted to the hair on the front end of the rod, and so on to the end of the operation. Again, the line thus measured in the most favourable position, although its parts may be in the same plane, is in reality not a straight line, but a part of a polygon described around the curvature of the earth, the sides of which are each equal to the length of the measuring rod. This polygonal line must be reduced to a continuous curve at the mean elevation of the level of the sea.

The next important point which deserves particular notice, is the establishment and mensuration of the angles of the primary triangles. In order to insure the best results, the triangles should be as nearly equilateral as the surface of the ground will admit, and the sides from twenty to thirty and even fifty miles in length. To satisfy these conditions requires a very careful exploration of the country by an experienced eye. That the precise position of the angular point may be observed at the distance mentioned, artificial signals are required and of these several different kinds have been employed. In the English survey simple masts were erected and they were found to answer very well when projected against a clear sky but when the back ground was a dark object they were not distinctly visible even when painted white. In other surveys balls elevated on the top of masts were used. In the survey of the coast of the United States, Mr. Hassler employed at first truncated cones of burnished tin which reflected an image of the sun, and being elevated on masts were seen at a great distance; but the instrument which has superseded all others for this purpose, and is now used on the coast survey, is that called the Heliotrope, the invention of Professor Gauss of Gottingen. It consists essentially of a small mirror placed immediately over the angular point and so adjusted that a beam of reflected sun light is thrown directly into the telescope of the distant observer. To keep the beam constantly in the proper direction from which it would soon be deflected by the motion of the sun, a person is employed to adjust the mirror anew, from time to time, and for the more ready effecting of this, it is attached to a telescope through which the distant station can be distinctly seen. The telescope being properly pointed, the beam of sun light is directed along a line parallel to the axis of the instrument, by means of two holes in screens attached to its side. By this arrangement, a mirror of a few inches in diameter, can be distinctly observed in a clear day at the distance of forty or fifty miles.

The measurement of the precise magnitude of the angle, included between any two sides of the large triangles, is a delicate operation for the performance of which different instruments have been employed. The first surveyors who aimed at any accuracy, used a large quadrant of a circle divided to the fraction of a minute and furnished with two telescopic sights, one of which being directed to the signal at one end of one of the lines, and the other sight to the signal at the end of the other line, the arc included between the two directions was the measure of the angle required. This instrument, simple as it may appear, is liable to be influenced by so many causes of error that the use of it has been abandoned. It is practically impossible to divide a circle into a given number of parts, all precisely equal among themselves. To obviate the errors arising from this cause, an instrument consisting of an entire circle was used in the survey on which was founded the French system of weights and measures. A repetition of the measurement of the angle being made in succession, on the different parts of the circumference of the circle, the errors of the divisions would tend to balance each other, and the average of all the measurements would be a nearer approximation to the truth. There is, however, the objection to the use of this instrument, that it merely gives the measure of the angle in the plane of the sides of the triangle, while for the purposes of the survey, the horizontal angle, or that of a spherical triangle described on the convex surface of the earth is required; consequently a reduction is to be made, founded on an additional observation of the angle of altitude of the one station above the other. In the English survey an instrument called a theodolite was employed, which differs from the repeating circle, in having the telescopic sight, moveable in a vertical plane, so that while the graduated circle is horizontal, the telescope can be directed to a point above the horizontal plane, and in this way the spherical angle can be directly obtained without subsequent calculation. In the beginning of the coast survey of the United States, the angles of the primary triangles were measured with a theodolite of two feet in diameter, but for this was afterwards substituted a more perfect instrument by Troughton and Sims, of London, which has been used with admirable success since 1836. The graduated circle of this theodolite, is thirty inches in diameter, and it is said to exceed any other instrument ever made for the same purpose, both in the size of the telescope and the power of the microscope, for reading the divisions. But no instrument constructed by human means

can be expected to be perfectly accurate. Notwithstanding all the care that may be bestowed on it by the maker, it will be found affected with errors inseparable from the very nature of the material, and, therefore, it becomes the duty of the surveyor, to adopt such methods of observation as may serve, in the greatest degree, to diminish the errors or to cause those of opposite tendencies to balance each other. It is truly surprising to what a degree of accuracy ingenuity has carried the principle of the elimination of error in works of the kind; but the proper application of this principle can only be made by one who to much experience, adds a profound knowledge of physico-mathematical science.

After the triangulation of a district has been completed, and the exact relative position of every point in the survey accurately protracted, it is next required to draw on the map the lines of relative latitude and longitude. For this purpose were the earth a perfect sphere, the bearing of any one of the principal lines with reference to the true north being obtained, that of all the other lines could be calculated and the lines of latitude and longitude for the whole chart be accurately projected; but as the earth is not perfectly spherical, this method is not to be relied on, and therefore the bearing, or the azimuth as it is called, of different lines in distant parts of the survey must be determined. The simplest method of accomplishing this is by means of the theodolite directed first along one of the lines of the survey, and then to the pole star when it is farthest east, and also when farthest to the west of the meridian. The mean angle between these directions is the quantity required. But even the frequent determination of the azimuth cannot be relied upon solely for giving the difference of longitude, especially when the survey has considerable breadth in the east and west direction. In addition to it, astronomical observations should be frequently made at fixed points, such as those of the occultation of stars by the moon, of solar eclipses, &c., which may also serve to determine the longitude from the first meridian. The employment of the magnetic telegraph also affords a ready method of ascertaining the difference of time, and hence the longitude between the several points of the survey which may happen to be near its path; and even in some cases it strikes us, a wire might be temporarily extended from one point to another for the same purpose, the return part of the circuit being formed by the ground.

In order to be constantly assured of the accuracy of the work, the tests of verification should be frequently applied.

The sum of the three angles should exhibit what is called the spherical excess; and the base of verification in measurement and computation, give the same result within a few feet, even in a length of five or six miles, and at the distance it may be of several hundred miles from the original base. Such accuracy has been obtained in the great surveys of Europe and will undoubtedly be exhibited in the American survey.

Trigonometrical surveys of the kind we have described, have been made or are now in progress in various parts of the world, namely, in Austria, Russia, Sweden, Denmark, Hanover, Prussia, Swabea, Bohemia, and the German States generally, Italy, Naples, and Sicily, Switzerland, France, England, the British possessions in India and the territory of the French colony in Algiers. Europe is indeed covered with a series of triangulations, from the south of Sicily to the polar circle, from Ireland to the interior of Russia, from Bordeaux to the frontier of Turkey. Some of these commenced in the latter part of the last century are still in progress.

The American coast survey was recommended to congress by President Jefferson, during the session of 1807, and an appropriation of $50,000 was made for the work in February of the same year. During the following month circulars were addressed by the Secretary of the Treasury, Mr. Gallatin, to a number of scientific gentlemen, requesting their opinion individually, as to the plans to be adopted for carrying out the provisions of the law. Thirteen answers were returned to these circulars, which were submitted to a committee of the members of the American Philosophical Society, at the head of which was the president of the institution, Dr. Patterson. After a full consideration of the merits of the several plans proposed, that submitted by Mr. Hassler, a native of Switzerland, who had been employed in operations of the same kind in his own country, was adopted. The survey was however destined to meet with many delays and difficulties. On account of the threatening aspect of public affairs in reference to a rupture with Great Britain, nothing was done in the way of immediate preparation for the work until August, 1811, when Mr. Hassler was sent to England to procure the necessary apparatus for carrying into operation the plans proposed by himself; but before the instruments could be finished war was declared, and the agent was detained abroad as an alien enemy, until 1815.

In August, 1816, Mr. Hassler was formally appointed superintendent of the coast survey, and immediately entered on the duties of his office in the way of exploring the country

for the purpose of discovering a suitable position for the establishment of a base line. A locality for this essential part of the survey, was finally chosen in that part of New Jersey which borders on the Hudson, and is immediately behind the perpendicular ledge of rocks well known to the traveller on that river by the name of the Palisades. The base line was measured in the spring of 1817, and was found to be 30999.8 English feet, or a little more than five miles and a half long. During the same year, a series of triangles founded on this base and spreading over the basin of the lower part of the Hudson, including New York bay and the adjoining country, was established, in order to the extension of the survey north and south, along the sea-board. Also to be assured at the beginning of the work, of the accuracy of the instruments and methods employed, a base of verification was measured on the south shore of Long Island, near the Narrows, the length of which deduced from the triangulation, was found to agree with the actual measurement within about eight inches, the whole length of the line being 25443¼ English feet, or nearly five miles.

We might conclude from these facts that the survey had now been commenced in good earnest, and that the work would be prosecuted to a successful termination, with a liberal support from the government, but this was not destined to be the case; before Mr. Hassler could have an opportunity of presenting a report of the result of his labours during the year, the survey was effectively discontinued by an act of congress, passed in April, 1818. The principal cause of this sudden stoppage of the work is to be attributed to a want of a proper appreciation of the importance of the object, and a knowledge of the nature of the operations, combined with the embarrassed state of the public finance in consequence of the war which had just terminated.

In 1827, after a lapse of ten years, the coast survey was again called to public attention by the enlightened policy of the Hon. Samuel L. Southard, the Secretary of the Navy, who in his reports to congress repeatedly urged the necessity of resuming the survey on the original plan. Finally, after another delay, the law of 1807 was revived in July, 1832, and the President again authorized to employ such astronomers and other persons as he should deem proper for carrying on the work. In August of the same year, Mr. Hassler was reappointed to the charge of the survey, and continued in the employment until the time of his death, in November, 1843.

During the interval of the interruption of the survey, Mr.

Hassler presented a memoir on the subject to the American Philosophical Society, which was published in the transactions of this body in 1825. It contains a minute account of the plans adopted for carrying on the work, a description of the instruments he had procured for the purpose, and of the labours which had been performed in 1817. This memoir was received with much favour by competent judges abroad, and the commendation bestowed on it was of no little importance in awakening a sentiment of national pride, which had considerable influence in assisting the passage of the act authorizing the renewal of the survey in 1832.

Mr. Hassler's first report on the progress of the work, was made in 1834. Under the new organization, the primary triangulation was conducted exclusively by the superintendent. The secondary triangulations were carried on simultaneously in different districts, by three principal assistants, namely, by Mr. Ferguson, Mr. Blunt, and Captain Swift. The topographical operations, which consist in the filling up of the minute survey of the secondary triangles, was intrusted to five or six separate parties, each consisting of an assistant and five or six men. The hydrographical surveys were made by officers of the navy, detached by the executive department for the purpose. In these the sounding operations were carried on by the reciprocal observations of three observers on shore, and two on board the vessel. The position of the vessel at the points corresponding to the several soundings, was thus obtained by the measurement of five angles and two base lines. This system of operation was carried out as far as the land could be seen, or about twelve miles; beyond this, the position of the points of soundings was determined by means of celestial observations for latitude, and the indications of the chronometer for longitude.

Under this organization, the work appears to have been prosecuted up to the present time, but with very variable success. The first operations after the recommencement of the survey, was to uncover the station points of the triangulation of 1817, which had been preserved, in some cases, by truncated cones of stone-ware, sunk sufficiently below the surface of the ground; and in others, by drilling a hole of two inches in diameter into the solid rock; an accurate description of the locality having been placed on record. The new survey was at first based on the triangulation of 1817, and extended north and south from it; but in 1834, a new and much longer base was measured on that part of the south shore of Long Island, which extends along what is called Fire Island Beach, near

the light-house. The measurement was completed in forty-five days, with the apparatus before mentioned, and described in the transactions of the American Philosophical Society, and its length found to be 8¾ miles. The position of this base on the level beach, and but little above tide-water, offered unusual facilities for an operation of this kind. It presented, however, the disadvantage which results from the impossibility of permanently marking the terminations of the line, on account of the encroachments of the sea. To avoid the effect of this occurrence, which is said to have since actually taken place at one end, the base was referred, by triangulation, to two permanent and elevated points, from twelve to twenty miles inland: the distance between these is known in the reports of the survey by the name of the *mountain base.* Notwithstanding the objections which have been urged against this base, its great length, and the facilities which the position afforded for exact measurement, will perhaps more than compensate for the want of permanency in the points which mark its extremities. For should circumstances ever render it necessary to verify this base by another measurement a line applicable to the purpose, could be readily deduced from the mountain base; but from the present indications of the accuracy of the primary triangulation, such a necessity will probably never exist.

We have found considerable difficulty in ascertaining the precise state of the survey at the time of the death of Mr. Hassler, but from the examinations of a committee of congress in 1842, it appears that the primary triangulation extended from Mount Carmel, in Connecticut, to Yard's, near Philadelphia, including twenty primary stations, and covering 3,577 square miles. The secondary triangulation exceeded in extent the primary, and included the space along the coast from Narraganset bay in Rhode Island to Cape Henlopen at the mouth of Delaware bay. It covered a surface of about 11,000 square miles, while the topographical and hydrographical surveys up to the same time extended over about 4,200, and 5,600 square miles, respectively.

Although the coast survey had been apparently recommenced in 1832 under the most flattering circumstances, yet it must be confessed that during the ten years which followed, its progress was not such as the friends of the work and the public generally had reason to expect. Recalled to important duties requiring great personal exertions, and the adjustment of perplexing difficulties, at a period when most men begin to withdraw from the ordinary duties of active life, Mr. Hassler no longer pos-

sessed the practical ability to carry out fully the plans devised by himself a quarter of a century before. But we desire not to dwell on this part of the history of the survey, and would rather call to public attention the great indebtedness of the work to the early labours of Mr. Hassler; and perhaps we cannot present this in language more appropriate than that of his successor, at the beginning of his first report. "The coast survey owes its present form and perhaps its existence to the zeal and scientific ability of the late superintendent, who devoted the energies of his life to it; and who but for its interruption at a period when he was in the prime of manhood, and its suspension for nearly fifteen years, might have seen its completion. The difficult task of creating resources of practical science for carrying on such a work upon a suitable scale, required no common zeal and perseverance for its accomplishment, especially at a time when our country was far from having attained her present position of scientific acquirement, and when public opinion was hardly sufficiently enlightened to see the full advantage of thoroughness in executing the work. For his successful struggle against great difficulties, his adopted country will do honour to his memory as the pioneer of a useful national undertaking."

The appointment of Alexander D. Bache, LL. D., to the office of superintendent of the coast survey, took place in December, 1843, and the acceptance of this gentleman, well known for his scientific labours in every part of the civilized world, and highly esteemed for his moral qualities by all who enjoy the pleasure of his acquaintance, was received by the friends of the survey as a guarantee that it would now be prosecuted with energy and skill to a successful termination. The appointment of Dr. Bache was urged on the President by letters from most of the men of scientific reputation in our country, and we know that it has received the approbation of some of the most distinguished cultivators of physical science in Europe. In filling an office of this kind it was gratifying to find that political considerations were entirely disregarded, and the merits and fitness of the individual alone considered.

Soon after the appointment of Dr. Bache he submitted a plan of operation for the ensuing season, which was fully approved by the Hon. John C. Spencer, Secretary of the Treasury, who during his continuance in office, exhibited the most lively interest in the coast survey, and readily lent his talents and his influence to every plan which might serve to improve its condition. The peculiar feature of the plan proposed by Dr. Bache was the immediate verification and closing of the

primary triangulation of Mr. Hassler by measuring a base line as near as possible to the southern termination of his labours. It was considered, in justice to his memory, that as little of the work of others as practicable should be included in his series previous to its verification; and it was also deemed most proper to assign this measurement to his senior assistant, James Ferguson, Esq. It was also proposed to verify the main triangulation, on Long Island Sound, by measuring a base as near as possible to its northern termination, besides extending as far as practical all parts of the survey.

The first report of Dr. Bache, exhibiting the progress of the survey during the year ending November, 1844, was presented to the senate in December of the same year. Our limits will only permit us to give a very brief account of its contents. It is the only report we have met with in searching for the materials of this article that gives a clear idea of the actual state of the survey at the time it was made, and accompanied with maps for its proper illustration. There is another peculiarity of the report which deserves notice as exhibiting a characteristic of Dr. Bache. We allude to the scrupulous care with which he gives to each assistant his due credit even in case of a mere suggestion.

The report is divided into several different sections; the first of which gives an account of the survey from Narraganset bay northward and eastward. In this quarter the primary triangulation, which is still under the immediate charge of the superintendent, has been extended across the state of Rhode Island and a part of Massachusetts. Five primary stations were occupied and angles observed from fifty-three different points of the survey. The whole number of angles measured by the superintendent during the season is 2,753, and the surface included within the triangles is about 1,100 square miles. The secondary triangulation in the same section has been extended so as to include Buzzard's bay and the greater part of the Vineyard sound. The area covered by it is 379 square miles. The work was planned and executed by assistant C. M. Eakin. The topographical operations in the same quarter, cover a total area of one hundred and forty square miles. The soundings under the directions of the naval officers, on this part of the coast have been nearly completed from Point Judith to New Bedford, inclusive.

The next division of the work extends from Narraganset bay to New York, and thence to the capes of the Delaware. The main triangulation of this section, which is connected with the primary triangulation of Mr. Hassler near Fire Island base,

was extended by one of the principal assistants, Edmund Blunt, Esq., over Long Island Sound, to Narraganset Bay. This work was not originally intended to take the place of a primary triangulation, but the care bestowed on it appeared to justify its provisional adoption as such, with the precaution of measuring at once a base near the north end for its verification. An eligible situation for a base was found on the site of the Providence and Boston railway, the road having been originally graded for two tracks, and only one having been constructed, a wide space was left on the side, which offered in one place an admirable location for the purpose, being easily connected with the triangulation, and affording a straight base of about eleven miles long. The measurement was commenced on the 11th of September, and completed on the 28th of November. The apparatus employed was the same used by Mr. Hassler, at Fire Island Beach, with some improvements by Mr. Blunt. This base is intended to close the survey made under the direction of Mr. Hassler, at the north, and to serve as a base of departure for a new primary triangulation, for the further extension of the work. The operations for deep sea-soundings, have been continued off the coast, in this district, under the charge of Commander T. R. Gedney, of the navy; and have been carried out from the land to the distance of from seventy to one hundred miles, and to a depth of more than one hundred fathoms. They now extend from beyond the eastern extremity of Long Island to the capes of the Delaware.

The next section relates to the extension of the secondary triangulation, which had previously reached southward to the mouth of the Delaware, under the care of Captain Johnstone, of the army. The party surveyed seventy-four square miles, and occupied twenty-seven stations; and also prepared the ground for the "plane-table" operations of next season. The topographical survey of the shore of the Delaware River and Bay, and also the soundings of the latter have been finished. The hydrographical operations have also been carried on southward and eastward of Cape Henlopen, to the extent of about one hundred and fifty square miles.

Another section of the report gives the operations in the Chesapeake Bay, relating to the selection and measurement of the proposed base for the southern verification of Mr. Hassler's triangulation. After considerable reconnoitering, the site of this base was finally chosen, by the superintendent, on Kent Island, in the Chesapeake, about thirty miles below Baltimore, and opposite Annapolis. It is five miles and four-tenths long,

and was measured by Mr. Ferguson, with the same apparatus employed by Mr. Hassler on the original base. Although the final verification of Mr. Hassler's survey cannot be completed until the primary triangulation is brought to this base, yet it is satisfactory to know, says Dr. Bache, that the results afforded through the secondary triangles, show a remarkable coincidence in the length of one of the sides, as computed from this base and from the original one, the difference not exceeding twenty inches in a line of twelve miles. Mr. Ferguson has also been engaged in the "reconnoissance" for continuing the primary triangulation of Mr. Hassler, so as to connect it with the base of verification; also the triangulation from the ends of the same base has been commenced; seven primary stations and one secondary, have been occupied; the area included within this triangulation is 420 square miles.

The progress already made in this work, leaves only five stations to complete the intended connexion with Kent Island base, and when this is accomplished, the surveys executed by Mr. Hassler and his assistants, will be included between two bases of verification about three hundred and thirty miles apart, between which the work will be nearly or quite complete, over an area reaching from Maryland to Massachusetts.

In addition to the work just mentioned, a secondary triangulation, near the head of the Chesapeake Bay, was commenced, which now includes twenty-nine stations, and covers ninety-five square miles. Also plane-table surveys were made on the shore of the Chesapeake, and the adjacent country, which cover upwards of eighty square miles, and hydrographical surveys were made covering an area of more than one hundred and fifty square miles.

Besides the operations we have described, others of a more miscellaneous kind have been undertaken. Explorations have been made, we believe by Mr. T. H. Gerdes, in North Carolina, Louisiana, Mississippi, and Alabama, for commencing the survey in these different states, during the next season. Astronomical observations for determinining the latitude, longitude, and azimuth, have been made by the superintendents at several of the stations of the primary triangulations. A series of observations for latitude have been made at the two extremes of the main triangulation, and for azimuth, near the north end, by Mr. Blunt. Also a series of observations for the same purpose have been carried on by the assistants, near Kent Island. It is to be regretted that the astronomical instruments belonging to the survey were found defective, and that the superintendent was obliged to borrow from Columbia Col-

lege, and West Point, articles of the kind necessary to the prosecution of the work.

A series of magnetic observations on the variation, the dip, and the intensity of the needle, were made by Professor Renwick, of Columbia College, in some of the principal harbours of Long Island Sound. The most important of these elements, the variation, is required immediately, to finish a series of charts of this district, now preparing for publication. At several points, observations on the tides, the velocity and temperature of currents, the change in the position of bars, have been carried on, together with a series of observations on meteorology.

It is the settled policy of the present superintendent, to give the results of the survey to the public as soon as they are accurately prepared; and in accordance with this, four sheets of the map of New York bay and harbour have been published; and one hundred and sixty-nine copies distributed under the authority of an act of congress. It is however, a matter of mortification that a narrow-minded consideration of false economy, should have restricted the number to be distributed to three hundred. This number is insufficient to supply even the institutions in the different congressional districts, whose representatatives have applied for them; leaving none to be sent to foreign governments, and literary and scientific societies at home and abroad. Provision was not even made for furnishing our own naval vessels; but we hope more liberal views have prevailed among the members of the last congress, in reference to this subject, and that ample provision has or will be made for the free distribution of these maps, and the immediate publication of all the work now finished in the office.

From the report of the superintendent, it appears that there exists a large amount of material, the accumulation of past years, in part or quite ready for publication. To withhold this unnecessarily from the public, is trifling with the lives and fortunes of our citizens, and doing violence to the commercial property of some of our most important cities. To show that we do not express ourselves too strongly on this point, we will refer to some discoveries made during the present year, which are given in the several parts of Dr. Bache's report, and exhibit in a strong light, the imperative necessity of the immediate publication of the results obtained, as well as the efficient extension of the work. At the close of a report made by Lieutenant commandant Blake, to the superintendent, are the following remarks. "I cannot forbear calling your atten-

tion to the great deficiencies in the existing charts of this dangerous section of the coast, upon which I have been employed this season. They all appear to have been founded upon surveys made before the Revolution, with some amendments and additions; but even immediately off the important port of New Bedford and Fairhaven, where nearly three hundred whale ships are owned, I found dangerous single rocks near one of the main ship channels with but five feet water on them, entirely omitted in the latest publication."

The same gentleman states that the survey of Delaware Bay shows a perfectly safe and direct channel for merchant vessels of the largest size, where no channel has heretofore been supposed to exist. It presents several advantages over the old channel, and must be of great importance to the commerce of Philadelphia; also three new channels have been discovered over the "Cape May ridges," which will be of great utility in the coal trade of the same city: and a dangerous shoal, hitherto known to but few, if any, of the pilots, near the main ship channel, has been traced out in the same district. The charts of Delaware Bay have been found entirely unworthy of confidence. The position assigned by the most authentic of them to one of the principal lighthouses, is nearly seven miles in error. Several dangerous shoals, with but a few feet of water upon them, and on which numerous wrecks have occurred, are placed from three to five miles from their true position; and the bay is represented in one part as fifteen miles in width, when it is actually found by the survey to be but seven.

It is expedient and proper, in all cases, to give the coast survey all the advantages of popularity which discoveries of the kind just mentioned entitle it to, and in accordance with this view, but without wishing to diminish, in the least degree, the well-merited reputation of the officers who may be engaged in the sounding operations, we must, in this place, express our decided disapprobation of the name given the new channel into the harbour of New York. Thousands who have heard of the Gedney channel, are unacquainted with the fact, that it is one of the legitimate offsprings of the coast survey, and that all engaged in the work, were concerned in the discovery. The name of Coast Survey Channel, would be, in our opinion, a more appropriate title.

From the account we have given of the report of the superintendent, it must be evident that more work has been performed during the past year, than in any previous year of the history of the survey, and this will appear more worthy of

notice, when the difficulties are considered, with which Dr. Bache had to contend, in entering on the duties of his office. The records of the labours of his predecessor, were to be deciphered, accounts were to be adjusted with the treasury department, which had been a perpetual source of perplexity to almost every secretary; prejudices in favour of old plans, and against the introduction of new ones, were to be overcome; and in short, almost an entirely new and more efficient organization was required, with a set of instructions for carrying it into operation during the coming year.

One of the plans adopted by Dr. Bache, we cannot speak of but in terms of the highest commendation. We allude to the apportioning of the work of calculation, and of verification, as well as of celestial observations, at certain points, among a number of the most distinguished practical astronomers of our country. By this arrangement, science will be encouraged and the interests of the survey advanced. Those who have heretofore devoted themselves to the acquisition of knowledge for its own sake, will receive a new stimulus in the moderate compensation allowed for their labours, as well as in the honour of participating in a national work of this kind. The cost of the survey will be diminished, on account of the smaller amount of pay required by a person who remains at home, and devotes but a part of his time to the employment; and it will also be more rapidly advanced, as well as additional security offered against error, by a greater division of labour, while the principal officers of the survey, released from the labours of calculation, can devote themselves, even in winter, to the field operations of the southern triangulations. To insure the full advantages of this plan, a rule should be established, that no person be thus employed, whose reputation does not rest on actual contributions to astronomical science, which have received the commendation of competent judges. The effect of this rule, would be to exclude a host of pretenders, and place in merited relief those on whose labours the scientific character of our country, in this line, really depends.

In accordance with this plan, which received the approbation of the Secretary of the Treasury, W. C. Bond, Esq., was engaged to make a series of astronomical observations at Cambridge, and Professor E. O. Kendall at Philadelphia. Sears C. Walker, well known for his attainments in practical astronomy, is engaged in the reduction of astronomical observations. His report shows that considerable progress has already been made in the work committed to him; five out of

nine classes of astronomical phenomena brought to bear upon the longitude of a central point of the survey, and embracing the results of seventy-two different observations, are completed. Mr. Bond has reported the result of a series of occultations and moon-culminating stars; and Mr. Kendall has already furnished interesting approximate results obtained with an Ertel circle for latitude. Professor Pierce, of Harvard University has been employed in determining the longitude approximately, between Liverpool and Boston, by the repeated exchange of chronometers, through the means of the steam packets. Also, as the beginning of a system of verification of the astronomical observations made by the officers of the survey, those of Mr. Blunt near the southern termination of his triangulation in Brooklyn, have been calculated by Professor S. Alexander, of Princeton, and observations of the superintendent are now in the hands of the same gentleman, to be submitted to the same ordeal. The valuable labours of Professor Renwick, which may be considered as belonging to the same organization, have been already mentioned; and from the whole results of the last year in reference to this plan, there can be no doubt of its importance to the work, and its beneficial effects on the science of the country.

Peirce ?

It would also appear to be another favourite measure of Dr. Bache, to enlist in the cause of the coast snrvey, the talents and the influence of the officers of the army and navy, as well as to employ the recent graduates of West Point; the work offering to the latter an admirable school of practice. It is gratifying to learn that under the new organization, the gentlemen connected with these departments have shown a desire to engage in the work, and we cannot but hope soon to see the survey, with a more liberal appropriation, carried forward with increasing energy, under the generous rivalry of a number of additional parties, filled with gentlemen from these sources.

The concluding part of the report gives a statement of the intended operations of the next year, and also an estimate of the expense of the work with the same organization as last year. This amounts to eighty-eight thousand dollars for expense of the survey, and twelve thousand dollars for the publication of the work of past years. "With this appropriation," says Dr. Bache, "which does not exceed that of recent years, I feel confident that the work marked out in the foregoing report may be accomplished, the field and water operations carried on in the eastern, middle and southern sections of the work; and the speedy publication of the results be se-

cured." "While I thus submit an estimate, grounded upon the past policy of the executive and congress, in reference to the progress of the survey of the coast I would be wanting in my duty, did I not show how the work might be more rapidly advanced. I feel the more obliged to make this statement, because selfish motives might be supposed to prompt me as superintendent of the work to desire a continuance rather than its completion." An account is then given in detail of the plan, by which the immediate benefits of the survey may be extended in a comparatively short time, to nearly every part of our coast, by an appropriation of not more than fifty per cent. greater than that required by the present plan, while, in the sequel, the whole cost of the survey will not be increased, but rather diminished, since the operations recommended form an essential part of the survey, the expense of which cannot be lessened by any postponement; while with a more expanded scale of work, arrangements of the parties in reference to division of labour, and economy of time, become practicable, which cannot now be effected. "More than once," says the superintendent, "have I had occasion to regret the unavoidable diminution in the efficiency of a party, by the necessary decrease in its expenditures; and I am satisfied that true economy in the yielding of results proportionate to means expended, would be consulted, by a more liberal scale of appropriation.

EXTRACTS

From the report of the Superintendent of the Coast Survey, showing the progress of the work during the year ending November, 1845.

* * * * * * *

In the statements of the work done I have endeavored to be sufficiently minute, to enable the President and Congress to judge whether the progress for the past year has been satisfactory, either in reference to that of former years, or to the sum appropriated and expended.

In regard to the estimate for the next fiscal year, I would bespeak for it in advance a favorable consideration; it has been made carefully, and after due knowledge of the requirements of the different parties, and a careful study of the operations which can be carried on to the greatest advantage in the course of the year.

Any diminution of the sum there asked must involve a decrease in the amount of work which is practicable, and thus postpone the realizing of the results of the survey on some portion of the coast, and the ultimate completion of the work. Operations are proposed which may certainly be accomplished with the present scientific force, or with a very moderate addition to it. The number of parties which may be employed advantageously in their execution is stated. The actual expenses of such parties are taken as the bases of the estimate—expenses which are limited as far as is consistent with the due progress of the work, so that no party shall consist of more officers or men, or be supplied with more equipage, than is absolutely necessary. The estimates for computing, reducing, drawing, engraving, and printing, are regulated in a similar way. To place these estimates upon a lower scale would be, in the case of field parties, to risk the cessation of operations during the working season, and thus to incur the expense of salaries without corresponding progress in the work.

It is sometimes supposed that salaried officers alone constitute the working parties of the survey. It is true that the scientific chief of each party is the essential person by whom the results are obtained, and who works with his hands as well as his head; but there are also purely manual operations to be performed, requiring in each of the land parties the employment of at least from four to six, and in some cases ten and twelve, men. The number of persons, therefore, necessarily employed in the mechanical operations of the survey is very considerable.

The increase of the appropriation for the year 1845–'46 has enabled me to commence operations effectively in two additional southern sections, one in *North Carolina*, and one on the *Gulf of Mexico*. This is a measure of economy, since it gives employment in the field, during periods of the year when the parties cannot be employed to the north, and as it advances the work towards completion. It is of public utility,

J. & G. S. Gideon, printers

because it must give at an early day charts of parts of our coast but little known, and dangerous to the navigator.

Should the estimate which I furnish be adopted, the work will be extended from these centres, and a new southern centre be established in *South Carolina* or *Georgia*, from which in turn to extend the survey to meet the other parts of the work.

The estimate furnishes means for carrying on the survey of the coast effectively in the following named States—*New Hampshire*, *Massachusetts*, *Rhode Island*, *Connecticut*, *New York*, *New Jersey*, *Pennsylvania*, *Delaware*, *Maryland*, *Virginia*, *North Carolina*, *South Carolina* or *Georgia*, *Florida*, *Alabama*, *Mississippi*, and *Louisiana*—in all, sixteen States. In some of them the work is nearly finished, in others far advanced, and in others new centres are to be occupied, from which the survey may be extended until the parts unite.

The southern coast must be surveyed by frequent bases, connected generally by intermediate triangulations. There is no objection to the establishment of these centres, which will finally be connected by a chain of triangles. The results thus procured are of course approximate, until the connections are made, but they are practically useful, and in the absence of more complete ones (to be finally supplied by the Coast Survey) they may save the loss of many valuable lives and of much property. During the past year the survey in *North Carolina* and in *Alabama*, *Mississippi*, and *Louisiana*, has been actually begun, establishing two new centres, the northern one of which will be connected in three or four years with the chain of triangles down the Chesapeake, and thus with the whole coast survey from Maine to North Carolina. The sum which I ask for field work was repeatedly granted when the survey extended over but one of the five sections in which it is now executing.

The additional sum voted by Congress last year for reducing, engraving, and publishing part of the work of former years, has secured the engraving within the year of no less than seven sheets, and the preparation by computations, reductions, and drawings of others for engraving. Besides these, charts of two harbors, surveyed during the past year, are engraving, and will probably be finished before next February.

The work promised to be executed within the period embraced in this report has been actually done, and I may therefore claim confidence in the promises now made for the coming year.

The following is a summary of the work done since November, 1844, the date of my last report.

In the eastern section.—The primary triangulation has been extended to Cape Ann, and across the northern boundary of Massachusetts, one station observed on being in New Hampshire. The verification base on the Providence and Boston railroad has been connected with the primary triangulation. The secondary triangulation has been carried to the peninsula of Cape Cod. The topography of the shores of Buzzard's Bay, the Elizabeth islands, and Martha's Vineyard, has been nearly completed. The hydrography includes Buzzard's Bay and part of the Vineyard Sound. Additional observations for differences of lon-

gitude from Europe have been procured at Cambridge, Portland, and Nantucket. The work of this section has been within the limits of the States of Rhode Island and Massachusetts.

In the middle section.—The primary triangulation of Mr. Hassler has been connected with the main triangulation in Delaware Bay, and carried across the neck between the Delaware and Chesapeake Bays. A reconnoissance for correcting the work on the Delaware with that on the coast of New Jersey is in progress. Astronomical observations have been made at one of the Delaware stations.

Magnetic observations have been made in the harbors of Long Island Sound. The off-shore work has been continued, and the special examination of the Gulf Stream has been commenced. Observations for the set and drift of the tides have been made in New York Bay and Harbor, in the East river, and in Long Island sound. Additional soundings have been made in the East river and in Long Island sound. This work is generally within the limits of Connecticut, New York, New Jersey, Pennsylvania, and Delaware.

Southern section No. 1.—The Kent island base has been connected with the primary triangulation of Mr. Hassler, and the primary triangulation has been carried south of Kent island. A reconnoissance for a triangulation to connect the work on the bay with the Capitol and Naval Observatory, and for verifying the work on the Potomac river, has been completed. Also additional astronomical and magnetic observations have been made. A secondary triangulation of the streams emptying into the Chesapeake north of Kent island, and of part of the bay, has been completed. The secondary triangulation of the bay south of Kent island has made considerable progress. The topography of the shores of the bay, of the Patapsco river, and of other streams flowing into the Chesapeake north of Kent island, is more than three-fourths done. The hydrography of the Patapsco, and of the approaches to it, is completed, and that of the bay north of Kent island is nearly finished. This work is generally in the States of Delaware, Maryland, and Virginia.

Southern section No. 2.—The operations connected with the measurement of the base line on Bodies' island, North Carolina, and the triangulation of Albemarle sound, have been commenced.

Southern section No. 3.—A reconnoissance of the coast of Alabama, Mississippi, and part of Louisiana, has been made, and the triangulation and astronomical observations on Mississippi sound will be commenced as soon as the season permits.

The following maps and charts have been published within the year, or will be ready for publication about the first of January: a map of New York bay and harbor, on a scale of $\frac{1}{80000}$; two sheets of the large map of New York bay and harbor, scale $\frac{1}{30000}$, completing this map of six sheets; a chart of Fisher's island sound. One sheet of the entrance of Long Island sound, from the eastward; one sheet of Delaware bay and river; New Bedford harbor, surveyed in 1844; Annapolis harbor and the

Severn river, surveyed in 1844. The engraving of a sheet of the southern coast of Long Island is nearly done.

The engraving of the following is nearly completed. A second sheet of Delaware bay and river, and a chart of the harbor of New London.

* * * * * * *

In conclusion, I beg leave to present a sketch of the progress which may be made in the work of the next year, and an estimate of the means required to realize that progress.

Two new centres of operations have been added during the past year, one on the coast of North Carolina and the other in the Gulf of Mexico; to these I would add, during the coming year, a third centre on the coast of South Carolina, Georgia, or Florida, as a reconnoissance may prove most desirable; and I would extend the work efficiently from the two new centres. This can be done without proportionately increasing the appropriation for the survey; for, if the means of keeping the parties in the field for a longer period of time each year were provided, we could work to the South during the winter, and to the North during the summer—a system already in part commenced during the past year, and carried as far as the means at our disposal would allow.

Again, the enlightened co-operation of the heads of the War and Navy Departments, with the Treasury Department, and the general good feeling towards the survey of the officers of the army and navy, would enable us, under the directions already issued by Congress in regard to the employment of officers of the army and navy, to organize new parties, if we had means to fit them out, and supply them with laborers, transportation, vessels, and other appliances for surveying, which they require. We should thus be able to make such an impression on the public by the extension of the work, and the speedy publication of its results, as would repay, by a rich harvest of public approbation, the fostering care of the Executive and of Congress.

The present state of the work, in the different sections, will admit of the following progress during the next year:

1. *Eastern section.* The primary triangulation may be extended across the northern line of Massachusetts into New Hampshire, and some progress made upon the coast of New Hampshire. The secondary triangulation may be carried across Cape Cod and Massachusetts Bay, as far north as Plymouth. The topography of Martha's Vineyard and Nantucket may be completed, and that of the main be carried from Wood's Hole eastward to Monomoy Point. The hydrography of the Vineyard Sound, including the sound between Nantucket and the main, may be completed, and the dangerous shoals off Nantucket seaward be examined.

2. *Middle section.* The triangulation on the coast of New Jersey may be verified, the magnetic observations near New York and in Long Island sound, and its vicinity, may be completed, the observations of currents in New York bay, Long Island sound, and Delaware bay, may be nearly or quite completed. The important observations in the Gulf Stream may be continued, and the off-shore soundings be extended southward as well as eastward.

3. *Southern section, No. I.* The triangulation of the peninsula of the Eastern Shore of Maryland and Virginia may be completed, and its connection with the triangulation of the Chesapeake made. The primary triangulation may be extended southward along the Chesapeake; the secondary triangulation reach the Potomac, and pass up towards Washington. A main triangulation may be commenced to cross from Annapolis to Washington, connecting the Capitol and Naval Observatory with the coast, and verifying the triangulation of the Potomac. A tertiary triangulation may be carried up the rivers of the Chesapeake to the head of navigation of each. The topography of the shores of the Chesapeake north of Kent island, the topography of Kent island, and of the shores of the Chester, may be completed, and that south of Kent island be commenced. The hydrography of the bay north of Kent island, and of the rivers flowing into it, may be completed, and that between Kent island and the Potomac be commenced and considerable progress may be made in it.

4. *Southern section, No. II.* The triangulation of Albemarle and Pamlico sounds may be nearly completed, and that of the rivers emptying into them be commenced. The requisite astronomical and magnetic observations at the Bodies' island base, and neighboring stations, may be made. The topography of the shores of Albemarle sound, and the hydrography of Albemarle sound, may be commenced.

5. *Southern section, No. III.* The measurement of a base on Dauphin island may be made, and the triangulation of Mississippi sound and of Mobile bay, be carried on. The requisite astronomical and magnetic observations may be made in this quarter. The survey of the shores may be made from Dauphin island as far west as Mississippi city. The observations of tides and currents may be continued, and the soundings commenced in the same quarter.

6. *Southern section, No. IV.* A reconnoissance for a suitable base line, and to determine the character of the triangulation, which is practicable, may be made on the coast of South Carolina, Georgia, and Florida, establishing a new centre of operations.

7. *Office work.* The office work should consist, 1st. In the copying, reducing, and computing the observations of the previous season, and in making drawings and projections of past or for future work. The arrangement of the observations of the past year for publication. The verification of calculations made by the field parties. 2d. The preparation of the materials for a map to extend from Point Judith to the east chop of Holme's Hole, Martha's Vineyard, to include Buzzard's Bay and the Vineyard Sound, properly so called, and the commencement of the map itself. 3d. The reduction of a chart of the harbors of Refuge of Tarpaulin Cove, and of Holme's Hole, on the Vineyard sound, and the engraving of the charts. 4th. The engraving of the second sheet of Long Island sound, and the drawing and engraving of the harbors of New Haven and Oyster Bay. 5th. The preparation of an off-shore chart, to include the work of the coasts of Delaware, New Jersey, New York, Connecticut, and Massachusetts. The commencement of the

engraving of a sheet of this chart. 6th. The continuation of the drawing of the southern coast of Long Island, with a view to engraving and publication. 7th. The completion of the engraving of the upper sheet of Delaware bay and river, and the near completion of the sheet representing the entrance of Delaware bay and the approaches; the drawing and engraving of a chart of Little Egg Harbor, on the coast of New Jersey. 8th. The preparation of a chart of the Patapsco river and of Baltimore harbor, and the commencement of the engraving of the chart. 9th. The preparation of the materials for the commencement of a map of the upper part of Chesapeake bay on the publication scale, with a view to its completion as soon as all the data are furnished by the field parties, and its subsequent immediate publication. 10th. The data for a map of Albemarle sound, and of Mississippi sound, west of Mobile bay, should be collected and arranged, so that the maps may be drawn as fast as the field work is executed.

If the additional appropriation for preparing maps for publication, and for drawing and engraving, which was made last year, is continued, the new work and back work, which are spoken of together in the foregoing report, may be continued together; if not, one or other of them must be cut off. That appropriation was made after an estimate had been presented to the Committee of Ways and Means, showing the amount required to complete the reduction, drawing, and engraving of the work of former years, and asking for part of the sum to expend during the past year. It will be observed, that no work of this sort has been allowed to accumulate during the past year, but that publication has been made of what was complete in itself. This policy it is desirable to continue, and at the same time to publish the materials which have accumulated in past years, so as to bring the publication up to the field work. I am confident that this may be done for the sum stated in my former estimate—the progress made during the past year with the sum appropriated having come up to my expectations.

I place the estimate for the field work under the different sections, that it may be distinctly seen that the cutting off of part of it involves the cutting off of some one section of all proportionately. It should be observed, that if there is a necessity for cutting off new work, or reducing the amount of expenditure upon work already in progress, that economy requires, absolutely, that the new work be not begun; the proportionate facilities for continuing the new work not being equivalent to those of continuing the old.

General Items.

Current repairs of vessels at present in use in survey, and hire of others, for work generally - - - -	$1,350
Purchase of surveying instruments, books, maps and charts -	5,500
For rent, fuel, postage, materials for drawing, engraving, and printing, and for printing charts - - - -	5,000

Eastern Section.

To continue the triangulations north, into N. Hampshire, over Cape Cod and Mass. Bay, to Plymouth; the topography from

Wood's Hole to Monomoy Point; the hydrography through the Vineyard sound, and to survey the shoals off the island of Nantucket, including observations of tides and currents, will require two triangulating parties, two topographical parties, the whole time of one hygraphic party, and part of the time of another	$18,000	
To reduce and engrave the charts of the harbors of Refuge, of Holmes' Hole and Tarpaulin Cove on the Vineyard sound, to calculate the data for a map from Point Judith to the east chop of Holmes's Hole, including Buzzard's bay, the entrances to Narragansett bay, and the Vineyard sound proper, will require - -	1,300	
		19,300
MIDDLE SECTION.		
To verify the triangulation of the coast of New Jersey, to complete the magnetic observations near New York and in Long Island sound, &c.; to complete the observations of currents and tides in New York harbor, Long Island sound, and Delaware bay. The off-shore work off the coast of Delaware, New Jersey, New York, Connecticut, and Massachusetts, will require one triangulation party; one other party for two months; two hydrographic parties—one for the season, the other for five months - - - - -	8,750	
To complete the engraving of two sheets of Long Island sound; the reduction and engraving of two of Delaware bay; the drawing of the harbor maps of New Haven, Oyster bay, and Little Egg Harbor, and the engraving; the reduction, drawing, and engraving, of the off-shore charts belonging to the work of former years, will require - - - -	9,100	
		17,850
SOUTHERN SECTION.—No. I.		
To carry the triangulation from Cape Henlopen, and connect it with the Chesapeake bay work; to carry the primary and secondary triangulations down the Chesapeake; the tertiary triangulation along the water courses near it; a triangulation across to Washington, and up the Potomac. To finish the topography of the shores of the Chesapeake, north of Kent island, and to commence that of the shores south; to complete the hydrography of the upper part of the bay, and to commence that of the bay		

south of Kent island, and of the adjacent rivers, will require three triangulation parties during the summer, and one during part of the season; three topographical parties; one hydrographical party - - -	21,500	
To make the computations, reductions, and drawing for, and to engrave the chart of the Patapsco, and of Baltimore harbor; to make the computations, reductions, and drawing, of the chart of the upper part of the Chesapeake, will require - - - - - -	3,800	
		25,300
SOUTHERN SECTION.—No. II.		
To commence the triangulations of Albemarle, Roanoke, and Pamlico sounds; to make the necessary astronomical and magnetic observations, to triangulate the rivers emptying into the Albemarle and Pamlico sounds. To commence the topography of the sound and ocean shores, and the hydrography of the sound, will require one triangulation party during the whole season; one other during part of the season; one astronomical party; one topographical party; one hydrographical party; for the latter a vessel must probably be hired - - -	16,100	
The reduction of this work, and the computations connected with it, will require - -	1,500	
		17,600
SOUTHERN SECTION.—No. III.		
To measure a base line on Dauphin island; to triangulate Mississippi Sound, and westward; to make the astronomical and magnetic observations required; to begin the topography of the shores and islands; the hydrography, by observing currents and tides, and by soundings. To continue the reconnoissance eastward, along the coast of Florida, will require one triangulation party, one astronomical party, one reconnoitring party, two topographical and one hydrographical party - - -	17,800	
Calculations and reductions preparatory to map	400	
		18,200
SOUTHERN SECTION.—No. IV.		
Reconnoissance of the coast of South Carolina, Georgia, and Florida, commenced - -		900
		$111,000

The work in four of these sections is actually commenced, and to keep pace in the regular way with its progress, will require all that I have asked. The estimates have been made with care, and are approved by the Treasury Department. Should the amount be diminished, the work must necessarily be diminished, and that in a greater proportion than the diminution of the appropriation; because the work is economical, just in proportion as the system of division of labor can be more fully applied to it. The only choice will then be between neglecting certain sections altogether, or the wasteful way of working in all with insufficient means. I confess that the responsibility of omitting the work projected for any particular part of the country for the eastern, middle, or three southern sections, is one which I shrink from, and which I sincerely trust there may be no necessity for taking. If, however, the means asked are not granted, the responsibility for the progress of the survey, and for the period of its completion, thus passes away from me, for it would be manifestly unjust to refuse the means stated to be necessary to advance the work and to publish the results, and then to hold those engaged in or directing the work responsible for slow progress and the absence of publication.

But I trust a different course will be taken, and that the disposition shown to push the work forward rapidly, to task to the utmost the powers of all concerned, to economize in every way short of destroying the efficiency of the work, to publish the results as fast as they are obtained, will be responded to by the grant of the amount which, after careful examination, I pledge myself to be necessary to the due progress of the work, and to be that which can be applied to the greatest advantage during the coming fiscal year.

I ought not to close this report without saying that the scale of the survey may be still further expanded if desired by Congress. In my last report I showed how this expansion might take place, carrying on the work more rapidly on the coasts of the Atlantic and Gulf of Mexico, at an additional cost of about $47,000. The foregoing estimate is based upon the continuance of the policy heretofore sanctioned by the Treasury Department and by Congress, but I am very willing to go forward more rapidly, and agree to commence the work at once on our newly acquired coast of Texas.

The extent of the line of coast within the geographical limits of the United States for the time being is determined by nature, and the more rapidly it is surveyed, consistently with accuracy, the more economically can the work be done, the sooner will the loss of life and property be diminished by showing the dangers of the coast, the sooner will the reproach be removed from us of being the only civilized nation still almost dependent mainly upon foreign charts for the little knowledge of its coasts and harbors which it possesses south of the Chesapeake and north of the Vineyard sound.

NEW YORK, SATURDAY, SEPT. 11, 1847.

C. F. HOFFMAN, Editor.

THE UNITED STATES COAST SURVEY.

This National work is advancing so steadily, and at the same time so quietly and unostentatiously, that we desire to help in extending information respecting its progress and its prospects. As a matter of contemporary scientific labor, as a national undertaking, and as a subject identified with the commercial welfare of the country, the Survey of the Coast of the United States, under the authority of Congress, has so general and real an interest that every intelligent citizen should have some knowledge of it.

When a work of such magnitude is going on tranquilly and without agitation, there is something in the very nature of such progress that gives assurance of vigorous and successful administration. There is assurance, too, of confidence in it,—of general belief that its vast responsibilities are faithfully discharged; and on this account, it is matter of congratulation, we think, that, although the Coast Survey is a subject of annual legislation, so little is heard of it in connexion with Congressional proceedings. The annual report of the Superintendent is communicated to Congress by the Secretary of the Treasury; estimates are submitted; the appropriation, recommended in the Report, is voted, and so the Survey goes on from year to year; the Superintendent and his Assistants and the persons employed in the very various duties of it are at work,—hard at work, and ceaselessly. Standing, as the Coast Survey does, both from the nature of the work and its administration, altogether aloof from party relations, it occupies a position due alike to its nationality and its importance. It has ceased to be a debatable topic; it is one of the unanimous subjects in Congress. There is general conviction of the necessity of the work, and what is of no less consequence, there is confidence in the manner in which it is conducted. Whatever doubts,—whatever conflict of opinion there may be on questions of policy, permanent or occasional—high duties or low duties—war or peace,—it is a settled thing that the National Survey of the Coast is to go on unto its completion,—till the sure knowledge, thus acquired, of every harbor and channel, current and shoal, along our extended shores, shall save commerce and life from the perils of what else would be wilful and guilty ignorance. We are glad, we repeat, that so little is heard of the Coast Survey from Congressional proceedings: one angry debate there would give it a far greater notoriety—an undesirable notoriety; but, instead of that, the results of the work have established its character, and are quietly building up the solid fame of Professor Bache, as the Superintendent of it. Profound science and practical energy combined have produced an unanimity of opinion respecting the Survey, and well-earned public confidence makes it safe from change or interruptions.

The tranquil progress of the Coast Survey, desirable as it is for any National work and especially for one of a scientific nature, makes it necessary occasionally to present to the public mind the magnitude and importance of the work, with some accounts of its condition from time to time. There is nothing in it that admits of any signal demonstration, calculated to astonish or impress the minds of men,—to make them feel how much is doing—how great is the extent and value of the undertaking to which the Nation has committed itself. The annual reports on the Survey, being of course of a scientific and somewhat technical nature, and circulated, too, only as Congressional documents, are known but to a limited number of readers. Still fewer, perhaps, are those who, by visiting the Coast Survey Office at Washington, see the combination of labor there in working out the results of the field and water operations. There are many, therefore, in all probability, whose knowledge of the progress of the Survey will be no more than the chance observation of separate items of intelligence,—a newspaper notice, perhaps, of the Superintendent at one time engaged on a small island off the coast in the Gulf of Mexico, measuring a "base line," or again at some station on the Atlantic, first at the North and then at the South; or the mention of some topographical party; or a line or two in the Shipping News, reporting a U. S. vessel having sailed on a surveying cruise; but such notices of the operations of the Survey are met with singly and by chance, and hardly suggest much, even to a reflective mind.

Again, it is not likely that the extent of the Survey will be appreciated by such direct personal observations as people have the opportunity of making. The signal-posts, marking some of the Survey stations, may be noticed along the Coast or in the interior,—it may be in Massachusetts or in New Hampshire,—noticed without any thought of their being also in Pennsylvania and Virginia, and the Carolinas, and along the Gulf of Mexico. The coaster sees them on Nantucket, and he knows of the work going on in that quarter; other men observe them along the involved irregularities of the shores of Chesapeake Bay, or in the neighborhood of Mississippi Sound, but these signs, separately seen, are seldom thought of as belonging to one great work, under the guidance of one mind. A small encampment may be seen on some sand-heap of an island or promontory in the sea, or perhaps on some elevated ground, fifty miles or more from the ocean, and the passer-by is surprised to hear that it has to do with the Survey of the Coast: the observing tents may be seen in one of the Middle States, or towards the Northern or Southern extremities of the Union. At equally remote distances the topographical parties may be encountered: a surveying vessel may be seen busy with the soundings and the currents of the Nantucket Shoals; another may be spoken exploring the Gulf Stream, and another at work near the mouths of the Mississippi: astronomical and magnetical observations at various stations, or at Cambridge, New York, Philadelphia, or Washington, may come to the direct notice of persons—here of one and there of another; these operations, apparently insulated, may be personally met with, but no impression is thus received, at least by people generally, of the extent of the operations or their combination in one large scheme. Even the published results,—the Maps issued from the Survey-office,—whether the general Coast maps, or the harbor maps—hardly give an adequate idea of the unity and the magnitude of the work, from which the attention is drawn away by the minuteness of detail and the miniature accuracy, which are of course the great merits of these admirable charts of particular sections of the shore or of particular harbors.

But, after examining one of these maps—say, the large map of New York Bay, or of New Bedford or Annapolis Harbors—a seaport or a bay-port, let any one turn his eye to a common map of the United States, and looking along the Shore line from the Northern limit of Maine down to the Southern cape of Florida, and thence along the borders of the Gulf of Mexico on to the last limit of Texas—comprehending, all the while, the circumference of each island along the Coast, and the complex configuration of each Bay, and, most of all, the curious involutions of Chesapeake Bay, and the River banks up to the head of coasting navigation,—he may then form some idea of what an undertaking the Coast Survey of the United States is—of what is doing and what is to be done.

We have dwelt on the magnitude of the work, because it is that which shows the magnitude of the national responsibility in connexion with the Survey. And now, let us ask what is that responsibility—what is it that makes the Coast Survey a duty—and a national duty? God has given us, as a people, a vast territory, to use for our own good and for the good of our fellow-beings throughout the world; and with it we hold such territorial dominion over a portion of the open sea along the coast, as modern law appropriates to the nations of the Earth. With the gift of all this territorial power—on land and water—there is given to the nation the duty of improvement and cultivation, and of so exploring the national possessions that there may be commodious and safe access and intercourse—the best channels and harbors of refuge from the storm be made known—and that the rock, and the shoal, and the treacherous current shall cease to be the secret perils of the deep. Such is the moral tenure upon which every civilized nation holds its territory.

The very nature of this duty making it a national one, it rests as such upon the general government of the United States; and happily it is neither thwarted nor perplexed by sectional jealousies or constitutional scruples. Wherever the Constitution carries the commercial power of the general government, it carries—we will not say the power—but the *duty* of the Survey. No pretext of interpretation or of policy can contract it, for there cannot be right or reason for the omission or neglect of any strip of American shore—be it on the Atlantic,—the Gulf of Mexico—the Pacific Ocean—or those inland seas, the Great Lakes. The work that is to be done is to explore so as to give a trustworthy chart of every section of our Coast—whether on the Continent or the islands scattered along our shores,—the seaside and the shores of Bays and navigable Rivers, and the great extent of Lake Shore, on our Northern borders, from Sackett's Harbor, or rather from the Southern extremity of Lake Champlain to the furthest West of Lake Superior. That it will be the work of years matters not; the more the need of present exertion; it is to be done, and enough has been accomplished under the system now in operation to show how it may be done thoroughly and with prompt results—in a manner that fulfils the purposes of the Survey, and is worthy of the Country.

The Coast Survey being once recognised as a national duty, it follows manifestly that it is a duty to be carried on by the Government vigorously; and by the Government, we mean of course Congress as well as the Executive, and the Superintendent and officers, who are directly charged with the work. As the Survey gives forth its results, those results are immediately followed by their commercial benefits, and therefore the appropriations for the work should be commensurate with its practicable and efficient progress. The most sagacious policy and the truest economy will be simply this,—to appropriate without stint, from year to year, what can be well worked with. Why the Survey should never be suffered to loiter, before its completion, for lack of means,

is obvious from this,—that the importance of it can have no other measure than that of the value of the commerce which is unceasingly flowing in and out of the many ports of a coast so extended—on the Ocean and on the Lakes, and along the banks of many rivers, and, what is more, the value of human life that is ventured on the waters. What statistics can give an idea of the worth of the foreign commerce, for instance, of New York or Boston—the coasting trade of Philadelphia—or that more internal commerce which passes in and out of such harbors as Buffalo or Cleveland; or of the numbers of lives concerned in such navigation and exposed to its dangers? Now it is directly in the way of the largest and richest portion of the foreign and domestic commerce of the country, that during the past year there has been discovered by the Coast Survey, a Shoal six miles south of any known danger, out of sight of land, in the midst of deceptive currents—unmarked and unknown except to the lost. A portion of the sea, so frequently traversed and so familiarly known as the neighborhood of the Nantucket Shoals might have been supposed to be accurately known, but the careful and exact processes of the Coast Survey discover a shoal hitherto unknown, lying for a distance of near two miles,—having in some places only eight feet of water, and surrounded with a treacherous depth, so that a vessel may have a cast of 15 or 20, or even 25 fathoms, and in a moderate breeze be aground in five minutes: and this danger lies in the usual track of vessels between New York and Europe; and all those from Boston bound south to any port on the American coast, to the West Indies, or to the Southern Atlantic ocean, pass in the neighborhood of it. In the Appendix to Professor Bache's last Report, we find a letter addressed to him in December last, by the Presidents of sixteen Boston Insurance Companies, acknowledging the receipt of the charts of this "New South Shoal," discovered by one of the Surveying parties during the last Summer; it is with justice they add:

"The determination of this hidden danger, lying, as it does, in the direct path of the great European trade from and to New York, of the West India trade from this and the eastern ports, and of the coasting trade between the New England and southern States, is a very valuable help to the security of our foreign and domestic navigation.

"Since this discovery was announced, several cases have been recalled of vessels that have either actually struck the bottom or been in great peril in this vicinity. They were supposed to be near the old South Shoal, and to have been carried out of their course by strong currents or unavoidable mistakes in their reckoning. In some instances great blame has fallen on the commanders, as it now appears, without cause. Possibly the steamship President was lost on this spot.

"The services hitherto rendered by the Coast Survey have promoted the best interests of the country, by contributing to lessen the loss of life and property on the water; and we have no doubt that other discoveries as valuable as this remain to reward its labors, particularly on the shores of the southern States."

This shoal, and also a shoal spot in the Vineyard Sound, were discovered, it is proper to specify, by the hydrographic party in the U. S. Surveying Schooner, under the command of Lieutenant Commanding Charles Henry Davis.

Whatever probability there may be in the conjecture respecting the fatal disaster of the steamship "President," which, it is known, was last seen in the dangerous neighborhood just spoken of, it suggests some reflections which cannot lightly be dismissed. We have referred to the duty of the Coast Survey chiefly in its relation to ourselves, our own citizens, and our own interests; but the duty has a much larger scope; it is commensurate with obligations to commercial Christendom. The foreign ship, that is welcomed to our ports, sails in and out from them, trusting to our pilots and our charts. The knowledge needful for such navigation is got as we can give it. It would be treacherous hospitality to expose the foreign ship, visiting our shores, to the jeopardy of stupid or incompetent pilotage: it is very imperfect and indeed perilous hospitality to furnish charts that give no warning of an unseen shoal, and which by ignorant omission may actually lure the misguided vessel to its destruction. It is shipwreck in its most cruel form, when the ship, with its rich freight of life and merchandise, perishes near its port,—perishes from some unknown cause of destruction, and, though nigh the coast, to be heard of no more. We may remark, however, as one of the happy developments of modern civilization, that nations, recognising the duty of providing, whether for their own or foreign traders, correct means of information respecting their shores and harbors, are engaged in careful surveys for this purpose. The survey of the coast of France is, we believe, completed; the ordnance-survey of the British Islands is in progress; Russia, Prussia, Sardinia, and other European governments are engaged in similar works. The government of the United States, with its extended water-boundaries, has more to do than any, and from this the practical inference is that it must be done vigorously—adequately to the needs of the country and honorably to the scientific character of those to whom the work is intrusted.

The plan on which the Coast Survey has been conducted for some three or four years past, and which was introduced by Professor Bache, soon after his appointment, is that the work is not confined to one section of the country. It is in progress in different parts of the coast; and the resulting maps are published as the work proceeds, so that for example, charts of New Bedford or New Haven harbors may be published simultaneously with charts of the Delaware or of Annapolis harbor. This plan of extending and distributing the work has now received the repeated sanction of Congress and of the Treasury Department, which has the general direction of the Survey, and may be considered as in successful operation. It is proved to have great advantages in many respects; in point of economy, partly from the division of labor, and the conduct of the work, according to the season, at the North or at the South; in yielding earlier results upon parts of the coast, which otherwise would not be reached for years, and in securing a more equal distribution among the States of the Uni[illegible] the benefits to be derived from a work purely national in its character.

During the last year, which formed the subject of the Superintendent's report, transmitted by the Secretary of the Treasury to the last Congress, parties of the Coast Survey were at work in fifteen States, viz. Maine, New Hampshire, Massachusetts, Rhode-Island, Connecticut, New-York, New Jersey, Pennsylvania, Delaware, Maryland, Virginia, North Carolina, South Carolina, Alabama, and Mississippi. The estimates for the present year proposed operations also in Georgia, Louisiana, Texas, and possibly Florida, so that the Survey may be described at the present time as in actual operation in eighteen or nineteen States.

For the systematic prosecution of the Survey, the Superintendent has divided the whole extent of Shoreline into Nine Sections of such general equality as is attainable, the work to be carried on in them in such a manner that as the sections close on each other they shall be mutually verified. The division of the Coast is described as follows:

"No. 1, or eastern section, from Passamaquoddy bay and the St. Croix, to Point Judith, including the coast of Maine, New Hampshire, Massachusetts, and Rhode Island.

"No. 2, from Point Judith to the capes of the Delaware (to Cape Henlopen), including the coast of the States of Connecticut, New York, New Jersey, Pennsylvania, and the greater part of Delaware.

"No. 3, from the capes of the Delaware to the capes of the Chesapeake (Cape Henry), including the coast of a part of Delaware, of Maryland, and part of Virginia.

"No. 4, from the capes of the Chesapeake to Cape Fear, including the coast of part of Virginia and the whole of North Carolina.

"No. 5, from Cape Fear to Cumberland sound (St. Mary's river), including the coast of South Carolina and Georgia.

"No. 6, from Cumberland sound (St. Mary's river) to St. Joseph's bay, on the west coast of the peninsula of Florida.

"No. 7, from St. Joseph's bay to Dauphin island, at the entrance to Mobile bay, including the coast of part of Florida and the whole of the coast of Alabama.

"No. 8, from Dauphin island to Vermilion bay, including the coast of Mississippi and a considerable part of that of Louisiana.

"No. 9, from Vermilion bay to the boundary, including the remainder of the coast of Louisiana and the coast of Texas."

The general state of the work will appear from the following summary given, with reference to the above arrangement, by the Superintendent in his last report, dated November 25, 1845:

"Of these sections the eastern (No. 1) includes the greatest extent of shore line, but also presents the greatest facilities for the execution of the work.

"The survey of one of the nine sections (No. 2) is in general completed, and that of six others (Nos. 1, 3, 4, 5, 8, and 9) is in progress. The work remaining to be done in No. 2 can be executed gradually, as parties are disposable for it.

"In sections 1 and 3 the work is in full progress, the field parties being engaged in different portions of the sections. These embrace the coast of Maine, New Hampshire, Massachusetts, and Rhode Island, and of part of Delaware, Maryland, and Virginia.

"A full beginning of the survey has been made in Nos. 4 and 8, embracing the coast of North Carolina and part of Virginia, and the coast of Mississippi and Louisiana; and I shall present gradually the estimates necessary for giving the same efficiency to the work in these sections as in Nos. 1 and 3. The preliminary operation of a reconnaissance is not expensive. Next in order are the triangulations and astronomical observations, which prepare for the topographical and hydrographical parts of the work, so that the progress is one of increasing activity from the reconnaissance forward, until all the operations of the survey are embraced, when the limit of expenditure allowed for the section is reached.

"Reconnaissances introductory to the operations in sections 5 and 9, on the coast of South Carolina and Georgia, and of Texas, have been ordered."

The progress of the work during the year ending November, 1846, is thus summed up:

"In section No. 1, the primary triangulation has extended its lines into New Hampshire and

Maine. The stations occupied being the most northerly ones in Massachusetts, one astronomical station has been occupied, and magnetic observations have been made at suitable points of the coast. The secondary triangulation of the southern part of Cape Cod has been completed, and the lines extended over the cape and the western shore of Massachusetts bay. The secondary triangulation of Boston harbor has been commenced. The topography of Martha's Vineyard, the island of No Man's Land, of Nantucket, and of the main from Wood's Hole, to include Hyannis, has been completed. The survey of the shoals south of Nantucket, and of Nantucket sound, has been commenced. The harbors of Edgartown and Nantucket have been surveyed. Further observations for differences of longitude from European observations, have been obtained at Portland, Cambridge, and Nantucket.

"In section No. 2, magnetic observations for the chart of the Delaware and Little Egg Harbor have been made. Verifications of topography have been made. Additional observations for differences of longitude and for latitude have been obtained at Philadelphia. The currents of Long Island sound have been in part investigated. Additional soundings have been taken.

"In section No. 3, the primary triangulation has been carried from the Kent island base south, to near the mouth of the Potomac. The primary triangulation across from the Chesapeake to the Capitol and Naval Observatory has been in progress. Further astronomical and magnetic observations have been made. The secondary triangulation has been carried down the bay nearly as far as the primary, and has covered the Eastern bay, the Chester, Wye, Choptank, South and West rivers, and part of the Patuxent. The unfinished portion of the topography from the head of the Chesapeake to Baltimore, of the shores of the Patapsco and rivers north of it, has been completed. That of the Chester river and adjacent shores of the bay, the South and West rivers, and Sassafras, has been commenced. That of the western shore of Kent island has been in part finished. The hydrography has included the upper part of the Chesapeake, from Poole's island to the Susquehannah, and below Kent island to near the mouth of the Patuxent, the South and West rivers, Eastern bay, the Susquehannah, Northeast, Bush, Gunpowder, Middle, and Back rivers, and part of Chester river and its approaches.

"In section No. 4, astronomical observations have been made at one station on Bodie's island. The primary and secondary triangulations have been carried over Albemarle and Roanoke sounds, from 'the marshes' to Carroon's point, and the triangulation of the Pasquetank has been commenced.

"A reconnaissance of the coast of South Carolina and Georgia (section No. 5) has been commenced.

"In section No. 8, the primary and secondary triangulations have been extended from the entrance of Mobile bay, westward, to Horn island. Observations of tides and currents have been made, and the preliminary survey of Horn island channel has been made.

"A recon[illegible] coast of Texas (section No. 9) has been [illegible]

"The exploration of the G[illegible]ulf stream, from [illegible] latitude [illegible] Sandy Hook to that of Cape Hatteras, has been made upon three sections across the stream.

"The magnetic telegraph has been used to ascertain the difference of longitude between the Washington and Philadelphia Observatories, as an introduction to operations on a larger scale.

"The determination of differences of longitude from Europe, by the chronometers of the Boston steam vessels, has been continued.

"The office computations of the observations of 1844 and part of 1845 have been completed. The computations of astronomical observations, for difference of longitude from European observations, have made good progress.

"The charts of New Bedford and Annapolis harbors (surveyed in 1844), promised in my last report, have been published; also the chart of Fisher's Island sound and the middle sheet of Delaware bay and river, the chart of Little Egg Harbor, a sketch of the newly discovered South Shoal ('new South Shoal') off Nantucket (1846). The chart of New Haven harbor is ready for printing. A sheet embracing the eastern entrance to Long Island sound, and one extending from Port Penn, on the Delaware, to the head of navigation, are nearly ready. The charts of New London and Syosset (Oyster bay) harbors are nearly engraved. Considerable progress has been made in engraving the charts of Holmes's Hole and Tarpaulin cove, both harbors of refuge, and the large sheet of the entrance to Delaware bay. An off-shore chart, from Point Judith to Cape Henlopen, has been commenced.

"Drawings of a chart of the Patapsco, in two sheets, and of the coast on the south side of Long Island, and several harbor charts, are nearly finished."

With respect to the publication of results, it is found that the present progress of the work admits of the publication of five or six sheets every year,—two to three of general coast maps, and three to four of harbor maps. The number of plates published, was, at the date of the last report, twelve, and that number was to be increased to seventeen during the present year; and proper means are taken for a distribution of the maps equal to the demand for them. The highest praise is due to the admirable execution of the Charts, for the distinct and beautiful minuteness of detail, and for the excellence of the engraving in all respects. They may be advantageously compared with the Maps of the British Ordnance Survey, and even with the highly finished maps of the French Survey.

The Superintendent's Annual Report presents a detailed account of the progress of the Survey in the several "Sections," with particular references to the labors of the "Assistants" and other officers employed on the work, the different operations being classified under the following heads.

1. The primary triangulations, and astronomical and other observations connected with them.

2. The secondary triangulations, and others connected with them.

3. The hydrography.

4. The topography.

5. The office work, including, firs , the calculations of the survey; second, the drawing and reducing of maps and charts; third, the engraving, printing, and publishing of the maps and charts; fourth, the making and repair of instruments.

For particular information the Report itself must be consulted, but the following general account of the successive operations may be added here, as giving to the general reader some idea of the manner in which the Coast Survey is carried on. The order is as fo[illegible]s; first, a reconnaissance, then the primary [illegible]d secondary triangulations and [illegible] a "base;" the topography and hydrography; the calculation, reduction, engraving, and finally publication of the charts. Of those first in scientific importance is the *primary* triangulation, connected with which are astronomical, magnetic, and other observations. This is executed by the Superintendent in person or by a principal assistant. The sides of the triangles are very long, sometimes exceeding fifty miles, by which the chances of error in amount and frequency are greatly diminished. The astronomical determinations of longitude and latitude are independent at each station, and yet are connected with the most distant stations by means of the triangulation. The primary triangulation is followed by the secondary, which fills the large spaces occupied by the former, and also brings down the stations or signal points nearer to the level of the sea and the line of shore, along which they stand at distances of from two to ten miles apart. The topography succeeds to the secondary triangulation. It is the duty of the topographer to represent in minute and faithful detail the surface of ground comprehended within the scope of the survey,—omitting no object that can be indicated on a chart. In the hydrographical work, it is the duty of the hydrographer to describe the bottom of the sea with equal fidelity, together with careful determination of tides and currents, and instructions to navigators. The charts published from the Survey office contain the combined results of all these operations, as they are completed in their systematic services.

The hydrographical part of the Survey during the past year appears to have comprehended a large amount of labor in the observation of tides and currents and soundings, in connexion with some of the most important harbors of the country,—and in Long Island Sound, in the Chesapeake Bay with its concourse of tributary rivers, and in the Gulf of Mexico. Besides the ordinary effects, the work has been rewarded by the signal results of not only the detection of the new Nantucket Shoal, but also the discovery of a new channel, that has been sounded out in Mississippi Sound; a channel of much importance not only to commerce, but in a military point of view, as giving access at all times to an excellent anchorage for ships of war. The hydrography of the Mississippi section, which gave the result of this discovery, together with an extended series of observations on the very peculiar tides in the Gulf of Mexico, was conducted by Lieut. Commanding Patterson of the U. S. Navy. We are much struck with the following passage in his report to the Superintendent, as illustrative of the importance of the Survey:

"The harbors of Ship Island inlet, and that under the north point of the Chandeleurs, demand our particular attention. Two such harbors of refuge, to say nothing of their importance in other points of view, are scarcely equalled upon the coast. They are perfectly safe from the most dangerous storms in the gulf—those from the eastward and southward—and could be entered with ease, during those storms, *without a pilot*, if accurate charts of the harbors and approaches are furnished, and proper lighthouses placed in proper places. For the want of these many vessels are lost, the annual value of which would cover the expense of the lighthouse establishment in the gulf, and the whole coast survey for a year. To show the security of the Chandeleurs, this little vessel (of 65 tons) rode out, in that anchorage, with perfect ease and comfort, the most severe gales which have been known upon that coast for twenty years. [illegible] gale the revenue cutter in the harbor [illegible] Pensacola cut away her masts to prevent going on [illegible] Ship Island Inlet is still [illegible] secure than this."

The off shore hydrography included, besides the operations in the neighborhood of Nantucket, soundings on the coast from the Capes of the Delaware to the Southern Islands of Massachusetts. These off shore soundings were carried out to sea to the depth of near two hundred fathoms, being at an average distance of fifty miles from the coast. Measures were taken for the early publication of the charts which are to contain these results, on account of their especial value to the foreign and coasting trade, in giving full information as to the manner of approaching and running

along that portion of the coast—the numerous ascertained depths being given, and the character of the bottom frequently and minutely described.

The off shore hydrography extended also to "*the exploration of the Gulf Stream.*" This portion of the work is not only interesting in a scientific point of view, but full of promise of results important to the cause of navigation. It derives an additional but melancholy interest from the sacrifice in the fulfilment of his duties of the distinguished young officer, Lieut. Commanding George M. Bache, who was charged with the exploration, and who perished by being swept from the deck of his vessel in the hurricane of the 8th of September, 1846. A more extended notice is due alike to the importance of the exploration of the Gulf Stream, and to the memory of an officer who, after having successfully devoted himself to the service with so much of scientific zeal and ability, died in the discharge of peaceful duty to his country. It is our purpose, therefore, to give a separate paper, in continuance of this article on the Coast Survey, to the character of Lieutenant Bache, in connexion with his services in the exploration of the Gulf Stream.

In concluding this paper, it is only necessary to add as an item of information respecting the Coast Survey, that the appropriation voted for it during the present year by the last Congress, in accordance with the estimates submitted by the Superintendent, was one hundred and forty-six thousand dollars. This being an increased appropriation, in comparison with that of previous years, is one of the gratifying proofs of the confirmed confidence of Congress and the Nation in the conduct of the work, according to the system which Professor Bache, combining, as he does, high scientific ability with remarkable administrative talent, has carried into successful execution. His plan of operations has not only at once extended the Survey along nearly the whole coast, but has shown with considerable accuracy at what annual cost it may be carried on. It has also established that the Survey of the whole coast may be completed within a limited period of time.

We shall be happy to have reason to believe that this paper has contributed to the general knowledge of the importance of the Coast Survey—its progress and prospects. There is, we believe, no appropriation of moneys from the National Treasury, which is devoted to a purpose at once so purely scientific and so eminently practical and beneficial. It is a work not only of enlarged policy, but it is one of the humane functions of civilized government. It is a national work in which a large portion of the people of the United States have a *direct interest—an interest that would be* measurable, if the value of the vast and varied commerce of a great country could be calculated. If not a direct interest, a remote [illegible] at least [illegible] work comes home to [illegible] American citizen. No man is living in such deep inland seclusion as not to have some concern in that which increases the facilities and security of commerce, and gives more and more protection against one of the perils of human life.

Magna Charta.—A tablet has been placed during the past week on one of the ruined pillars of the Abbey Church, Bury, in the grounds of Mr. Muskett, bearing the following inscription—"Near this spot, on the 20th November, A.D. 1215, Cardinal Langton and the Barons swore at St. Edmund's Altar that they would obtain from King John the ratification of Magna Charta."—*Jerrold's Weekly.*

Reviews.

The Principles of Nature, her Divine Revelations, and A Voice to Mankind. By and through Andrew Jackson Davis, the "Poughkeepsie Seer" and "Clairvoyant." 1 vol. pp. 782. New York: S. S. Lyon, and Wm. Fishbough.

Coleridge preserves the anecdote of an ignorant Dutch chambermaid, who, when suffering from delirium, raved in excellent Hebrew to the religious wonderment of all the simple neighbors. They thought the woman seized with "the gift of tongues," until some scientific visitor explained the miracle by tracing her former domestication with a worthy clergyman who used to read Hebrew aloud in his study while his female servant dusted his books of a morning. It was then agreed by the wiser ones that the mechanical impressions daguerreotyped upon the girl's senses in former years were simply reproduced by congestion of the brain (just as the flame brings out letters traced with lemon juice on paper, thus hinting at the properties of a more appalling kind of fire), even as we have attempted to show how such images may recur, when commenting upon Admiral Beaufort's letter in a late number of this journal.*

The most startling of the phenomena of mesmerism, as now admitted by all intelligent observers to have a real existence, are, to our satisfaction at least, traceable to and explainable by the solution which these anecdotes offer to a most interesting problem. The testimony to the sympathetic influence of one brain upon another, in certain conditions of the system of operator and patient, cannot at this day be set aside; but the testimony as to any *new* impressions which were not before in the brain of the operator or patient, manifesting themselves from the mind of the latter when in an abnormal condition, stands by no means upon the same indisputable grounds of evidence. The phenomena of the one case, though not yet brought within the acknowledged pale of science, have been known to scientific men for ages. The preternatural claims in the other case, though not less old, have in every instance been set aside when carefully examined by the enlightened physiologist. Nor do we think that *clairvoyance*† has *necessarily* any connexion with the well accredited phenomena of catalepsy as a natural malady, or as artificially produced by what is called "mesmerism."

The book before us has strongly fortified this conviction of disbelief in the supernatural claims of clairvoyance, while strengthening, in the most whimsical manner, our faith in the solution of the chief wonders of mesmerism *as derivable from Coleridge's anecdote.*

Accepting the history of the work as given in the preface to be true, viz. that these witness[illegible] were, in the presence of several [illegible] dictated to a scribe" by an [illegible] [illegible] while in a state of mesmerical slumber—we find no one particle of evidence upon any page or sentence of the book to show that the unconscious reproducer of this *omnium gatherum* of crudities held communion with any other world than that of which the Broadway Tabernacle is the centre, and whose confines have been swept, of late years, by the ample newspaper reports of Lardner's, Lyell's, and Brisbane's lectures in the New York Tribune. Brockden Brown's most singular fragmentary "History of Carsol" shows ten times the novelty and invention displayed in the fanciful historical statistics here given; and old Plato delivered long ago far more forcibly the sentimentality which is here offered as a substitute for religion.

The building up of such a big book is, however, a curious event in literary architecture; and after examining the structure with some curiosity, we feel as if we knew more of other similar edifices—more of the origin of other mystic erections, which have been as famous in their day as this is ever like to be. In proof of this we will venture, off-hand, to write the history of Jacob Bœhm, as it has never been set down before, but as its truth will be apparent to every reader of discernment from internal evidence alone.

Jacob Bœhm, then, was a Dutch shoemaker, in a direct line of fore-fathership to Coleridge's stolid Hebrew-stammering chambermaid. Unlike his descendant, however, Jacob was of a studious turn, and always sat over his last with Faust's popular journal the Tribuneizung spread before him. In this industrious journal were given daily reports of all the lectures pronounced in the learned city in which he dwelt. Indeed from the scientific discussions which animated its columns, Von Chamberz is said to have derived his whole remarkable theory of "the Natural History of Creation;" while Lord Monboddo, Joe Duggins and Caius Gracchus daily regaled its readers with novelties in physical science, moral discoveries, and the art of Squaring the political Circle.

From the age of fifteen to twenty-one Jacob Bœhm daily pursued his researches in this Cyclopædia of knowledge, until his last waxend of progressive improvement was fairly drawn through the soul upon which he was working. But there lay his hoards of learning, an inert congeries in his brain, a great, dyspeptic, indigestible mass of crudities, and contradictions—a *blind accumulation of newspaper common-sewerage.*

Now it chanced that in those days Van Helmont heard of the boy Bœhm. Van Helmont, the great martyr to the science of animal magnetism, whose fame has been so unfairly usurped by Mesmer; Van Helmont, who, fired by mystic hints among the Egyptian references of Herodotus,* reproduced to wondering Europe the buried science of Neurology; Van Helmont, whose books had just been burned for the first time by the Inquisition, heard, mesmerically, of the excellent and studious Bœhm, and determined to submit him to *his experiments if possible*; and Bœhm was duly magnetized by the modern originator and great master of the art. Van Helmont tried his sheer physical experiments upon him; those experiments, by which he attempted to [illegible] the preposterous claims to supernaturalism, advanced in behalf of miracles performed *in the convents*; published another book at the peril of his life; and was again silenced by the Inquisition.

Not so, Jacob, however. The fire of the magnetic passes had acted upon the Dutch Memnon as did Egyptian sunshine upon the old negro head of Thebes; and now, after its legitimate reveille had been played, it continued to give out a medley of sound in which each contributor to the Tribuneizung might have

---

* See Review of the power of the soul over the body, Literary World, No. 30.

† We use the phrase Clairvoyance here in its extremest or *Davisite* sense; for, in the limited application of the word, we really see no greater miracle in the nervous fluid, when in a highly electrical or magnetized state, passing from the eye through a piece of sheet iron, than we do in the pure electric fluid *not* passing through a pane of glass which the eye can pierce in its normal state.

* It is a poetic Greek fragment, by the way, which Herodotus quotes apropos to the art of curing maladies in Egypt by stroking with the hand.

Extract from Professor Schumacher's Astronomische Nachrichten, No. 632.

LETTER OF PROFESSOR A. D. BACHE TO THE EDITOR.

WASHINGTON, *February* 7, 1848.

The results obtained in connexion with the survey of the coast of the United States, under my direction, for difference of longitude by the electro-magnetic telegraph being of considerable interest, I have requested *Sears C. Walker*, esq., the assistant of the Coast Survey, in whose immediate charge the operations have been, to prepare a notice of them for publication; I have now the honor to forward it to you, and would respectfully request that you will give it insertion in your journal.

A. D. BACHE,
Superintendent U. S. Coast Survey.

CAMBRIDGE, *Massachusetts, Nov.* 10, 1847.

To Professor A. D. BACHE, LL. D.
Superintendent U. S. Coast Survey.

SIR: In compliance with your request, I forward to you a notice of the telegraphic operations for longitude comprising the substance of my report as far as completed. The final discussion of the observations for clock corrections by least squares is in progress, but not completed.

Your instructions for making the necessary preparations for passing telegraph signals, for the purpose of determining geographical longitudes, were received in the autumn of 1845. Arrangements for using the Jersey City and Washington telegraph line were made with the honorable Amos Kendall, in January, 1846. Wires connecting the main lines at Washington with the Washington Observatory were put up by the United States coast survey, in the summer of that year, and telegraph signals were passed between Philadelphia and Washington, on the 10th and 22d of October, 1846. More complete apparatus having been procured, experiments were renewed in July and August, 1847. Lieutenant *Maury*, Superintendent of the National Observatory, directed the co-operation of that establishment.

The services of Professor *Kendall*, Director of the Observatory of the Central High School of Philadelphia, had been engaged. Finally those of Prof. *Loomis* of the New York University had been engaged to superintend the observations at the temporary station of the U. S Coast

Survey in Jersey City opposite New York. Your instructions placed the arrangements of the details of the operations under my immediate charge.

After 10 o'clock P. M. the three stations just mentioned were, by means of the apparatus of the Coast Survey, converted into temporary Telegraph offices, as well as astronomical stations.

The astronomical observations for clock corrections and personal equations were arranged on the model of *Struve's* celebrated Chronometer Expedition between Pulkova and Altona.

The mode of transmitting *Morse's* telegraph signals was very simple. A mean solar chronometer was compared by coincidence of beats with the sidereal Transit clock, before and after Telegraph signals. Then the party giving signals having previously broken the circuit restored it by striking on his signal key, at intervals of even ten seconds for a period of about ten minutes, so as to ensure at least one coincidence. The party at the other station who received the signals, was notified of each signal beat by hearing his own armature beat. The apparatus was adjusted so that the receiving armature beat should be nearly as loud as the clock beat. The times of the armature beat were compared with those of the receiving sidereal clock beat by the ear alone, and the time so recorded. On some nights the signals, only twenty in number, were given at each ten seconds of the signal sidereal clock. But this method only repeats on the receiving clock the same fraction of a second, and does not furnish the same precision as the method of coincidence of beats.

Let us suppose that the Eastern Observer sends his Signal key beat expressed in sidereal time of the meridian of Greenwich,

$$\sigma = T + \omega - rt + d + \epsilon$$

and the Western Observer receives and records in time of the same meridian the accented quantities,

$$\sigma' = T' + \omega' - r\,t' + d' + \zeta' - \eta' - \theta'$$

where t = the interval from the date T to the date for which the clock correction is computed.
d, d' = the longitudes (—east, + west) of Greenwich of the eastern and western stations,
ϵ = the correction of the personal error in *giving* signals,
ζ = the same in *receiving* signals,
η = the *circuit* time,
θ = the receiving *armature* time,
ω = the clock correction, freed of personal equation of observer.

Then by eastern signals,

$$0 = (d' - d) + (T' - T) + (\omega' - \omega) - (r' t' - rt) - \epsilon + \zeta' - \eta' - \theta'$$

and by western signals,

$$0 = (d' - d) + (T'_{,} - T_{,}) + (\omega' - \omega) - (r' t'_{,} - rt_{,}) + \epsilon' - \zeta + \eta + \theta$$

Making

$$\varphi = T + \omega - rt; \qquad \varphi_{,} = T_{,} + \omega - r\,t_{,}$$
$$\varphi' = T' + \omega' - r't'; \qquad \varphi'_{,} = T'_{,} + \omega' - r't'_{,}$$

there results

$$\text{by eastern signals } 0 = (d' - d) + (\varphi' - \varphi) - \epsilon + \zeta' - \eta' - \theta'$$
$$\text{by western signals } 0 = (d' - d) + (\varphi'_{,} - \varphi_{,}) + \epsilon' - \zeta + \eta + \theta$$

also making $\quad m = (\varphi'_{,} - \varphi_{,}) - (\varphi' - \varphi)\,;\; n = (\varphi'_{,} - \varphi_{,}) + (\varphi' - \varphi)$

$$\text{(A)}\quad 0 = (\epsilon' + \epsilon) - (\zeta' + \zeta) + (\eta' + \eta) + (\theta' + \theta) + m$$
$$\text{(B)}\quad 0 = (\epsilon' - \epsilon) + (\zeta' - \zeta) - (\eta' - \eta) - (\theta' - \theta) + 2\,(d' - d) + n$$

The equation (A) is purely telegraphic. It is independent of the astronomical observations, and of the relative longitudes. It affords an important test of the precision of the work. The value of ϵ is nearly insensible as appears by the following table, in which it is given as nearly as could be determined by the ear of the listener.

For *Zantzinger*; $\epsilon = -0^s007$ No. of beats = 189
" *Kendall* ; $\epsilon = +0.051$ No. of beats = 100
" *Keith* ; $\epsilon = -0.003$ No. of beats = 20
" *Reynolds* ; $\epsilon = +0.023$ No. of beats = 118
" *Walker* ; $\epsilon = -0.001$ No. of beats = 30

These values of ϵ do not exceed the probable errors of the results. They authorize the conclusion that it is useless to attempt any correction of the signal times, for coincidence with the clock beats intended to be signalized, by the ear of the listener.

Where the method of coincidence of beats of a mean solar and sidereal clock was dispensed with, and a sidereal clock only was used, the value of ζ, or the estimated fraction of a second on the sidereal clock of the *receiving* observer, was sensible; as appears from the following table, which gives the result of the first series of experiments that I am aware of on this point:

Clock Reading d. T.	LOOMIS.		KEITH.		WALKER.	
	ζ	No. Beats.	ζ	No. Beats.	ζ	No. Beats.
0^s0	+0. 00	48	+0. 00	14	+0. 00	40
1	. 03	"	. 03	"	. 01	"
2	. 09	"	. 05	"	. 01	"
3	. 16	"	. 07	"	. 02	"
4	. 18	"	. 10	"	. 06	"
5	. 17	"	. 14	"	. 08	"
6	. 14	"	. 15	"	. 10	"
7	. 10	"	. 14	"	. 09	"
8	. 02	"	. 11	"	. 06	"
9	. 01	"	. 06	"	. 03	"
Means	+0.090	480	+0.085	140	+0.046	400

Mean of 1940 results, with six persons, $\zeta = +0^s058$.

Clock Reading d. T.	KENDALL.		REYNOLDS.		MASON.	
	ζ	No. Beats.	ζ	No. Beats.	ζ	No. Beats.
0s0	+0. 00	32	+0. 00	20	+0. 00	40
1	. 06	"	. 01	"	. 00	"
2	. 08	"	. 03	"	. 04	"
3	. 10	"	. 05	"	. 05	"
4	. 10	"	. 07	"	. 05	"
5	. 07	"	. 08	"	. 06	"
6	. 04	"	. 09	"	. 05	"
7	. 02	"	. 06	"	. 04	"
8	. 02	"	. 02	"	. 03	"
9	. 01	"	. 01	"	. 03	"
Means	+0.050	320	+0.042	200	+0.035	400

Hence it appears that observers on the average estimate the fraction of a second too small when using the ear only, unassisted by the eye. This error is also greatest at the middle date between two clock beats. It plainly indicates the necessity of relying solely on the method of coincidences of a mean solar and sidereal clock or chronometer, for which $dT = 0$; and by this table, as well as by universal experience, $\zeta = 0$.

After forming from each night's work the conditional equation (A) making $\epsilon = 0$, and giving to ζ the value in the preceding table, peculiar to each receiving observer when the method of coincidences was not employed, the table of the observed values of $[(\nu' + \nu) + (\theta' + \theta)]$ was formed.

Date, 1847.	WASHINGTON AND PHILADELPHIA.		PHILADELPHIA AND JERSEY CITY.		WASHINGTON AND JERSEY CITY.	
	$(\nu' + \nu) + (\theta'' + \theta)$	No. Beats.	$(\nu' + \nu) + (\theta' + \theta)$	No. Beats.	$(\nu' + \nu) + (\theta' + \theta)$	No. Beats.
July 17	+ 0.02	40				
19	— 0.11	"	— 0.09	40		
21	+ 0.07	"				
24	— 0.16	"	— 0.30	"		
27			+ 0 08	"		
28			— 0 16	"		
29	— 0.01	"	— 0.13	"	— 0.03	40
Aug. 3	+ 0.09	"	— 0.05	"	— 0.14	"
10			+ 0.15	"		
11			+ 0.20	"		
Means	— 0.017	240	— 0.038	320	— 0.085	80

Mean of sixteen results, $[(\nu' + \nu) + (\theta' + \theta)] = -0.017$.

From this table it appears that the two circuit times added to the sum of the two armature times is insensible. Each quantity is necessarily positive. The negative result for the aggregate, viz., -0^s017, must be regarded as the small error of the work.

Since we find $\iota = 0$ by trial, $\zeta = 0$ by the method of coincidences of beats of mean solar and sidereal clocks, and finally $[\nu' + \nu) + (\theta' + \theta)] = 0$, it follows that *for the distance of* 250 *miles, embraced in this experiment, the comparison of the clocks together is effected with the same degree of precision as if they were placed side by side.*

The next tables contain the equation (B) for each of the night's works. The value of ι, ζ, ν and θ, are used as stated above.

Longitude by Telegraph signals between Philadelphia and Washington.

Date. 1847.		By Philadelphia signals.		By Washington signals.		Mean result. (B)		No. of Stars observed at Philadelphia.	No. of Stars observed at Washington.	Relative weight.
		m.	s.	m.	s.	m.	s.			
July	19	7	33.017	7	32.920	7	32.969	9	6	3.6
	21	7	33.210	7	33.180	7	33.195	4	13	3.1
	24	7	33.060	7	33.056	7	33.058	8	11	4.6
	29	7	33.062	7	33.038	7	33.050	8	16	5.3
August	3	7	33.083	7	33.184	7	33.134	10	13	5.7
Means..		7	33.079	7	33.080	7	33.079	39	59	22.3
Jersey City and Washington.										
July	29	12	3.572	12	3.532	12	3.552	6	16	4.4
August	3	12	3.505	12	3.339	12	3.452	6	13	4.1
Means..		12	3.540	12	3.468	12	3.504	12	29	8.5
Jersey City and Philadelphia.										
July	19	4	30.557	4	30.322	4	30.440	6	9	3.6
	24	4	30.427	4	30.182	4	30.305	6	8	3.4
	27	4	30.444	4	30.461	4	30.425	7	9	3.9
	28	4	30.548	4	30.393	4	30.470	5	8	3.1
	29	4	30.284	4	30.530	4	30.407	6	8	3.4
August	3	4	30.473	4	30.298	4	30.386	6	10	3.8
	10	4	30.438	4	30.440	4	30.439	5	6	2.7
	11	4	30.242	4	30.363	4	30.303	6	13	4.1
		4	30.422	4	30.371	4	30.397	47	71	28.0

The preceding tables seem to authorize the conclusion: 1st. That *Morse's* electro-magnetic telegraph affords the best means for an astronomical determination of terrestrial longitudes between places in connexion with each other. 2d. That the two clocks may be compared together as well as if placed side by side. 3d. That the relative clock corrections for the night contain the only source of error to be apprehended.

If these points are admitted, I think we may further conclude that the relative clock corrections ($\omega' - \omega$) may be obtained with any desirable degree of precision, by sufficient multiplication of nights of observation, and of Zenith stars observed in the two positions of the transit instrument. The personal equation of the observers ($d\omega' - d\omega$) can be determined with sufficient precision by alternation of observers at the stations. The collection of a very extensive series of observations of the personal equation of the individuals employed in the work for 1847, indicates that this source of error far exceeds all others that are incident to the method. The reduction of any observer's clock correction for any night, to the normal value or average value for all the observers, is by no means constant. It seems to vary with the health and temperament of the observer. I have called it the temperament correction for this reason. When the alternations of observers are sufficiently numerous to eliminate this last source of error, there will remain only the error arising from the relative deviations of the plumb lines from those of a normal spheroid.

SEARS C. WALKER,
Assistant U. S. C. S.

FROM

THE AMERICAN

JOURNAL OF SCIENCE AND ARTS.

[SECOND SERIES.]

ART. XXXI.—*Review of the Annual Report on the U. S. Coast Survey.*

THE annual report of this important national work, interesting alike to the man of science, to the sailor, and the philanthropist, has just been published; and in accordance with our intention of keeping our readers informed of the state of the survey, we purpose to give a brief account of the operations during the past year, dwelling particularly on those points which are more generally interesting in a scientific point of view.

Plans and Operations.—The general plan for the more rapid extension of the survey presented in the previous reports of the superintendent, has been prosecuted with the continued success which it promised at its commencement. This plan, it will be recollected, consists in dividing the whole of our extended seaboard, including that of the Gulf of Mexico, into nine nearly equal portions, and in prosecuting the work in six of these separately and simultaneously. This plan will enable the survey to be accelerated as rapidly as the appropriations by Congress for the purpose will permit, and it will produce immediate results in the way of the examination of harbors and channels, of the highest importance to commerce. It also furnishes the means of introducing a uniform system into every part of the survey, the importance of which, in reference to economy and accuracy, must be manifest to all acquainted with operations of this kind.

That detached surveys, conducted upon different plans and principles, cannot produce a satisfactory map of a country, has been proved as often as the project has been tried. The head of the work should have constantly in his mind a distinct plan of the whole, leading to definite final

*Report of the Superintendent (Alexander D. Bache, LL. D.) of the Coast Survey, showing the progress of the work during the year ending October, 1847. (Senate Document, 30th Congress, 1st Session, Executive No. 6,) pp. 88, 8vo.

In our last number (p. 299) we barely announced the appearance of this Report, and cited a few paragraphs relating to the general results of the past year's survey.

results; he should be allowed full scope in the development and prosecution of this plan in all its parts, in their proper order of succession; and then and only under this condition he should be held responsible for the quality and the rapidity of the execution. The plan proposed by Dr. Bache has met the approbation of the head of the department under which he acts, and has received the support of Congress for three years past. Even the existence of the war has not prevented the increase of appropriation which has been called for by the continued extension of the operations. The superintendent has also been liberally aided by the head of the Navy department, and has thus incurred the responsibility above alluded to. The manner in which he has met this during the past year is shown in the report before us. It exhibits an improvement in the quality of results, and an increase in quantity over that of the former plan, which may be estimated at double the amount for an increase of fifty per cent. in the cost.

In accordance with this plan the field work was extended during the year 1844 into nine States, and the summer of 1845 into thirteen, in 1846 into fifteen, and during the past year into eighteen, namely, Maine, New Hampshire, Massachusetts, Rhode Island, Connecticut, New York, New Jersey, Pennsylvania, Delaware, Maryland, Virginia, North Carolina, South Carolina, Georgia, Alabama, Mississippi, Louisiana, and Texas. The estimate for the next year will provide for operations in every State on the coast of the Atlantic and Gulf of Mexico.

The chief part of the operations in one of these sections, namely, that from Point Judith to the Capes of the Delaware, is completed, and the work has made very considerable progress in two others, viz., in the section of New England and that embracing Maryland and Virginia. The triangulation was commenced in 1844 in a fourth section (North Carolina), and in 1845 in a fifth section, Alabama, Mississippi, and Louisiana. The reconnoissance preliminary to the triangulation was made in 1847 in South Carolina and Georgia and in Texas. When the work is commenced in any section it is gradually extended as the introductory operations prepare the way for others, a reconnoissance being succeeded by a triangulation and by astronomical determinations, andthese by the topographical survey with the plane table, and by soundings and other hydrographical operations.

Measurement of a new base line.—During the past year the measurement of a new base line nearly seven miles long has been made by the Superintendent in person, after a reconnoissance by F. H. Gerdes on the Gulf of Mexico. The principal novelty connected with this measurement relates to the base apparatus, the general plan of which was devised by Dr. Bache. The measuring bars were upon the compensation principle, first employed, we believe, in operations of this kind, by Colonel Colby in Great Britain, and by Mr. Borden in this country; but the method of obtaining the compensation was entirely different from that used by these gentlemen, and served to remove a cause of error which has been strangely overlooked in the different ap-

plications of the compensating arrangement, as usually employed. A bar of brass and of iron, of the same dimensions, and exposed to the same source of heat, will not arrive at the same temperature in the same time; the rapidity of change will depend upon the difference of conducting power, the difference of specific heat, and the state of the surface as to its absorbing power. Hence though two bars of different metals may show the same length at two different temperatures, yet, in the transition from the one temperature to the other, they will exhibit different lengths. To remedy this defect, the surfaces of the different metals were brought into the same absorbing condition by coating each with the same material, and the bars were made to attain the same degree of temperature in the same time, by increasing or diminishing the transverse section until the desired effect was produced. This apparatus was constructed in 1845, and first used with microscopes in the autumn of that year, and is briefly referred to in the report of November following.

"Having arranged the sections approximately," says Dr. Bache, "using numbers taken from the books, the changes in length, during the increase or decrease of the temperature, were not perceived when microscopes were used, supported upon wooden stands, or even upon stone blocks of small size; the means of measurement were not sufficiently delicate to detect them, or they were masked by greater changes in the supports. When the level of contact was substituted for the microscopes, or when Mr. Saxton's reflecting pyrometer was employed, these changes became very perceptible, and it was necessary to resort to direct experiment upon the material of the bars themselves to obtain even approximate compensation, and there to correct a small residual quantity by applying a covering more absorbent of heat to one bar than the other. If such changes have not been perceived hitherto, it has been because inadequate means were used to detect them. I am indebted to Lieutenant A. A. Humphreys and to Mr. Joseph Saxton for the perseverance and skill with which the experiments necessary to a complete adjustment of the apparatus were made."

"The lever and level of contact, first used, I believe, in the adjustment of standard measures by Bessel, was applied to indicate the lengths of the bars. The levels were so delicate that several divisions upon them made up a quantity entirely insignificant in the measurement. The doubt which I had was, whether the sensibility of the apparatus had not been carried too far. This was, however, entirely removed, upon finding the rapidity and certainty with which it could be used. The contact of two adjacent measures was between a blunt knife edge and a plane of agate."

"The trussed support for the bars adapted to bearing the apparatus at two points only, and the tin covering or tube which surrounded the whole, were similar in principle to those used by Mr. Borden, but differed entirely in the adaptation of them; the bars moved freely on the trussed frame upon rollers, and were not attached to the covering tube,

in which the trussed frame itself was merely supported. The tin covering was conical and was doubled."

"The trestles admitted of the various motions required in placing the apparatus. The length of the whole, about twenty feet, (six metres,) gave a weight which permitted easy and rapid transfer by four men, when covered with several thicknesses of imperfectly conducting material to keep the fluctuations of temperature within moderate limits. In arranging so many and various details, it is not to be expected that some of them will not admit of improvement; but the performance of the apparatus was highly satisfactory, working with a rapidity and accuracy quite beyond my most sanguine expectations, and making comparatively light the labor of all concerned in the excitement produced by expectations constantly surpassed. The contacts were usually made in much less time than the setting of the forward trestles for the next measure. The following statistics of the measurement will suffice, for the present, to show that we have obtained a useful auxiliary in a geodetic survey, especially when the difficulties of triangulation render advisable the measurement of frequent bases."

"The greatest length measured in the course of a day, in the final measurement, was one hundred and eighty-three tubes, equal to nearly seven-tenths of a mile; the least, forty-seven tubes, or one-fourth of a mile; the average, one hundred and four tubes, or four-tenths of a mile. The whole measurement of nearly seven miles was completed in seventeen working days, not reckoning the time lost by bad weather, or occupied by change of camp, and by comparisons of apparatus. The length of the apparatus was compared before and after final measurement with a standard iron bar, with which it had been compared in the office, by using Mr. Saxton's reflecting pyrometer."

"The accuracy with which a remeasurement of considerable length could be made, was tested more than once in the measurement, but it was determined to make a more complete direct trial by establishing intermediate marks, and noting by the micro-telescopes attached to the ends of the bars the deviation at intervals. The greatest deviation in the length of seventeen tubes was between one and two hundredths of an inch; the average in twelve cases of repetition, not regarding signs, was five thousandths of an inch; the final error at the end of the third of a mile remeasured was nothing. The probable error of remeasuring one hundred and twelve yards was five thousandths of an inch, making in the whole seven miles of the length of the base, and supposing all the errors to fall in the same direction, which is physically most improbable, about five-tenths of an inch."

Astronomical Observations.—Within the last two years a number of new astronomical instruments have been procured; among these a zenith telescope, which has been used for obtaining the altitudes by the method invented by Captain Talcott. This consists in observing the differences of zenith distances of stars culminating within a short distance of each other, and at nearly the same altitudes on different sides

of the zenith. The publication of the new Catalogue of Stars by the British Association, gives great facility in the use of this method, as well as accuracy in the results. At one station the mean probable error of a single determination, as deduced from the comparison of the several individual observations, was but four-tenths of a second of space, and at another but one-tenth. All the astronomical and other observations have been reduced to a system, in which numerous individual observations are scrutinized, and the limit of errors obtained by the method of least squares, which is now constantly used as a part of the plan of observation. By means of it the different instruments, which have on any occasion been used at the same place, can be compared, and in this way the superiority of the zenith telescope, as far as the comparison has yet been made, is rendered manifest. At the close of the year the comparison was going on between this instrument, used in the way we have mentioned, and that of a new zenith sector, similar to that devised by Professor Airy, and used in the survey of Great Britain, and the method of prime vertical transits. We may expect in the report of next year to find an account of the results as to the comparative value of the several instruments. The advantages in the use of the zenith telescope over instruments hitherto generally used in the field, are, ease of application, a high magnifying power, and the employment of a micrometer.

An astronomical station has been established at Nantucket, which is an important position on account of its being the southern extremity of the longest arc of the meridian to be found on the New England coast. Observations have been assiduously continued at this place by William Mitchell, esq., and his assistant. The method of determining the longitude by chronometers between Boston and Liverpool, has been continued by William C. Bond, and fifty-two results from twenty-three chronometers have been reported.

The use of new instruments has served to verify a remarkable conclusion arrived at in the observations of a former year. In places near each other, and were the plumb line cannot be influenced by the attraction of mountains, the latitudes derived from geodetical and astronomical data, do not agree with each other; or, in other words, the difference of latitude of two places in the vicinity of each other, is not found the same when derived from the triangulation between the two places and from separate astronomical observations. The latitudes of New York and Boston do not agree when compared by the two methods. Boston, Cape Henlopen, and New York differ from Philadelphia; and the various stations about the city of New York, when transferred to a central point, are all at variance with each other. This result, intimately connected with the questions of geology and the figure of the earth, was first announced in this Journal in 1845, and was referred by Dr. Bache to irregularities of gravitation occasioned by variations in the form and density of the material composing the crust of the earth. A discovery of the same kind has since been made by Major General Colby, in the

ordnance survey of Great Britain, apparently without the knowledge of the previous discovery on the survey under the direction of Dr. Bache.

System of Computation for Longitude, &c.—Dr. Bache early introduced a system of computation made by persons not employed in the field of operations. These computations consist of reductions and verifications of the observations of the triangulations of the azimuths and of the latitudes, and also of the discussions of occultations, eclipses, and other celestial phenomena which have been observed, and may serve for the purpose of ascertaining the longitude of the principal points of the survey. In the former work, Mr. Nulty and Mr. Werner are employed, and in the latter, Lieut. Gilliss and Mr. Sears C. Walker. The American observations collected by the last named gentleman for the determination of the longitude, embrace no less than five hundred occultations, and one thousand moon culminating stars. The European observations for comparison with these, amount to nearly two thousand. During the past year, Mr. Walker has also been engaged in reducing a portion of the extensive series of eclipses and occultations observed by W. C. Bond, esq., which embrace all the phenomena of this kind which were visible at Dorchester or Cambridge during a period of twenty-seven years. Lieut. Gilliss has been engaged in the comparison of the longitude of Washington, Hudson, and Dorchester, with those of the European observations of Cambridge, Greenwich, Edinburgh, Hamburg, Copenhagen, Kremsmunster, and Cracow. The corresponding observations in this country and Europe, in the year 1839, furnish 428 differences of longitude.

Use of the Magnetic Telegraph for differences of Longitude.—The employment of this method of ascertaining longitude has, under the direction of Dr. Bache, during the past year, proved entirely successful between Washington, Philadelphia, and Jersey City, opposite New York. Lieut. M. F. Maury again directed the co-operation of the National Observatory; the operations at Philadelphia were under the directions of Professor Kendall, and those at New York under Professor Loomis. The details of the observations were arranged by Assistant S. C. Walker of the coast survey. The principle of this method consists in transmitting signals from one station to another, and these noted by a time-keeper well regulated to the time of the place; the difference in the times gives the difference in longitude expressed in time.

"The signals are given at one of the stations by pressing a key, which causes a closing of the circuit. This closing it is intended shall be simultaneous with the ticking of a clock or chronometer at the station. The circuit being closed, if the electrical wave or current takes a sensible time to propagate itself, or to pass from one station to another, the absolute time of the signals reaching the second or receiving station, is sensibly different from that of making the signal at the first or giving station. A coil about the poles of a horse-shoe magnet of soft iron, forms part of the circuit through which the electrical effect is transmitted. Under its influence the soft iron becomes magnetic, attracting the soft

iron bar (armature or keeper) delicately poised at a determined distance from the poles of the magnet; the movement of this keeper sets in action a local battery, which gives sufficient power to make the dots and lines constituting the Morse telegraphic signals.* The click of the keeper of this temporary magnet is compared at the receiving station with that of a clock or chronometer, thus marking the time at which the signal, made at a known time at the giving station, is received. From this explanation, it appears that there is liability to error: 1. In the clock times at the different stations. These are easily examined, and the most probable times assigned at each station, the personal equation for clock correction being determined and allowed for, they may be treated as if only very small errors existed. 2. The time of striking the trigger or key, to close the circuit, may not coincide with the clock beat. The error, if any, from this source, is determinable by experiment; and careful experiment failed to detect a sensible amount. 3. The electrical effect may take a sensible time to be transmitted, and this may be known, if other sources of error could be got rid of, by transmitting signals from an eastern to a western station, and vice versa; and it may be rendered null in its effect upon determinations of differences of longitude by such alternate transmission, or it may be examined in its combined effect with the next error. 4. That of the sensible interval, if any exist, between the activity of the coil, its action in inducing magnetism in the receiving magnet, and the click of the keeper of this magnet. 5. The error in noting the fraction of a second as denoted by the clock. It was perceived that this difference in the estimate of fractions of a second, rendered the transmission of signals, by the beats of a well regulated sidereal clock, and their reception by another sidereal clock, of little avail, the time falling constantly upon the same fraction of a sound. The transmission of signals, by beats of a mean solar chronometer, and the marking of the time of reception by a sidereal clock or chronometer, carries the fraction of the second over every part of the whole second; and once, at least, in ten minutes, marks the coincidence of the beats of the two time-keepers. By observations of the coincidences, and the marking of intervals at the same station, the law by which each observer varied in the estimate of fractions of a second became known, and, of course, the differences (or receiving personal equations) of each observer, supposing them to be constant. Pains were taken to compare personal equations with all the observers. It turned out, finally, that this might have been done by transmitting signals; but, then, to have assumed it, would have been to anticipate a result which was sought. The part of the error, then, of receiving signals from error of noting time, was ascertained numerically, and its value could be assigned within certain limits in any case. The inference is drawn from an examination of this class of personal equations, 'that when the two clocks' (the one by which signals are given, and the other by which they are received, both being rated either to mean, solar, or sidereal time) 'do not coincide in their

* See a figure of this apparatus in this volume, p. 56.

beats, the observers on the average set down the fraction of a second of the signal received too small.' Of the five errors, then, which have been enumerated, the numerical values could be assigned to two, (viz. 1 and 5,) and one (viz. 2) was insensible. After assigning the values in any particular case to 1 and 5, there remain residual errors, caused by 3 and 4. Now, it is plain that both of these will affect the result alike; that is, will tend to make the time of receiving the signal later than it should be by the amount of retardation of the wave current, and by the difference in the time of its reaching the spiral coil and the click of the keeper of the receiving magnet. But a comparison of the observations shows a very small residual quantity having just the opposite sign, the signal being apparently received earlier than it was given. From this, the nullity of both these corrections, 3 and 4, is fairly inferred, and the interesting consequences follow, that 'the telegraphic method of comparing clocks, distant two hundred miles from each other, is free from error when the method of coincidence of beats is employed; and that the probable error of the longitude, from this method, is the same as the mean result of the computed relative correction of the clocks for the nights of observation.' An investigation of the probable value of such error shows that, under favorable astronomical circumstances, and with due care in the use of the transit instrument, 'the astronomical difference of longitude, between any two stations of a trigonometrical survey, may be determined by telegraphic signals, with a degree of precision of the same order as that of difference of latitude,' the inaccuracy depending upon the same causes as the deviation of the plumb line."

Magnetic Observations and Instruments.—Observations for determining the variation, the dip, and intensity of magnetism, are made at the more prominent points of the coast survey, and the instruments used for variation and intensity are those invented by Weber and Lloyd and modified by Lieut. Riddell. They consist of a portable declinometer, with its theodolite and apparatus for deflections and vibrations. This apparatus was here first used under the immediate direction of the Superintendent, and also at numerous detached stations by two assistants, Capt. T. J. Lee and Mr. R. H. Fauntleroy, and by two of their aids, and has been approved in every case by these gentlemen as convenient, and whenever the azimuth lines of the survey could be used, as giving accurate results. It was also used by Prof. Renwick and Dr. Locke, but whether approved or not we do not know. We mention this, particularly, because we have learned from a distinguished observer abroad that there is a disposition in England to return to the use of the older methods, which is certainly not warranted by the experience of the observers of the coast survey.

The magnetic observations near the city of Baltimore indicate that this region is one of considerable local attraction.

Maps of the Coast.—It is stated in the address of the President of the Astronomical Society of London that a specimen of the new map of

England indicates that it has advanced as much upon its predecessors as its predecessors had upon all other maps. The qualities which indicate this advance, we learn from the same Address, are: 1st. That the map is upon the scale of $\frac{1}{10000}$, or nearly six inches to the mile. 2d. That its details include every thing of topographical value which can be placed upon a map embracing the traces of the lines of equal heights. 3d. The latitudes and longitudes are graduated not to degrees, as on common maps, nor to minutes, as on the largest maps on which we have been accustomed to see graduations, but to single seconds of arc, each of these seconds occupying one-tenth of an inch. The latitudes have been determined from numerous observations with the zenith sector, and the difference of longitude of two exterior points, by the transportation of chronometers.

We are here presented with a test of quality which may be applied to the maps of our coast survey. 1st. The scale adopted by Mr. Hassler for the details of the maps was $\frac{1}{10000}$, or a little less than six inches to the mile. As the object of the work is to combine a chart for navigation with a map of the coast, this is too large for practical use, except in the case of isolated harbors, and was with propriety reduced to the scale of the great map of France, that of $\frac{1}{80000}$. The detail and beauty of execution of the American sheets, greatly surpass those of the celebrated map just mentioned. 2d. The system of topographical details introduced by Dr. Bache, secures uniformity in the representation of the ground and includes all that is alluded to in the foregoing account. The horizontal curves drawn at regular vertical distances, are marked in red, and the system of hachures adopted, is modified from that of Lehman. 3d. The scale admits of the same subdivision as those of the British maps; the numerous determinations of latitude, resulting from the discovery before referred to in regard to discrepancies of the geodetic and observed latitudes of near stations, are reduced to central points by the geodetic results; the determinations of difference of longitude made by the electro-magnetic telegraph, give materials of the same kind and quality as those alluded to in praise of the transatlantic maps. In the case of the longitudes, the operation of which is still in progress, a method is employed a step in advance of those abroad.

The large plates of copper on which the charts are delineated, are produced in a finished state ready for the engraver by means of the electrotype process. Also, the same principle is applied to multiply the plates after they are engraved, so as to increase indefinitely the number of impressions which may be obtained while the original plate remains uninjured.

Explorations of the Gulf Stream.—In the last report an account was given of a series of observations on the Gulf Stream, made by Lieut. Geo. M. Bache, whose life fell a sacrifice to his zeal in the discharge of his duty, and whose loss science was called upon to mourn just as he was commencing with his accustomed ardor the investigation of one of the most interesting phenomena of our globe. The results he ob-

tained will be given to the world in another publication, and it will be sufficient for us to state in this place that he examined three entire sections across the stream. His researches exhibit the remarkable fact, that the whole current of warm water, to the depth of at least four hundred and eighty fathoms, divides itself into two principal branches, separated by a portion of cold water, and that the transition from the cold water, along and next to the coast, is almost instantaneous, as if the two were separated by a nearly perpendicular wall, slightly inclining to the east at the top. The plan of operation, directed by the Superintendent, and commenced by Lieut. Bache, has been continued during the past year by Lieut. S. P. Lee, and a series of observations on the temperature at different depths has been made across the stream off the coast of Virginia, North and South Carolina, Georgia and Florida, for the purpose of comparison with those made the year before across the same places, and to ascertain what changes may have taken place. The results are highly interesting; the same general phenomena are presented as in the former survey; two principal divisions of the stream are observed, but these show a tendency in the last survey to separate into others; the points of maximum temperature are not in the same places, and the mean or average temperature is different. The investigation becomes more interesting as it is farther pursued, and we doubt not the Superintendent, with his love for physical science, will not fail to direct such observations as may lead to a more definite knowledge than we now possess of this interesting phenomenon of the ocean.

Changes in Channels and Shoals, &c.—One object of the coast survey is to ascertain the character and direction of the changes which may be going on in different parts of the coast, to provide the means of observing them in future, and to furnish the data on which the plans of controlling them may be founded. During the past year the changes in the Delaware river, near the Pea Patch, have been examined, and were found to consist in the closing of the old eastern channel by the extension of the Bulkhead shoal to meet the spit, extending from the upper part of the Pea Patch island. At the same time the new eastern channel has widened and deepened. These changes have been accurately marked on the map of the coast survey, which will thus furnish the means of discovering any future alteration. In this way the records of the coast survey will afford the data for solving problems of a most interesting character, as, for example, the rate of increase of the delta of the Mississippi.

Tidal Observations.—A series of observations on the variation of the height of water, and the currents produced by the tides, have been established at different points along the coast. The observations made at Old Point Comfort have been discussed by Lieut. Com. Davis, U. S. N., under the immediate direction of the Superintendent, for the purpose of ascertaining the effect of the variations in the moon's parallax and declination. In eliminating the effects of these, the oscillations caused by atmospheric changes appear as residual errors. The effect

of change of pressure and of wind on the height of water, is already apparent, and the continuation of the operations will, in due time, afford data for the formation of a prediction table of the time of the phases of the tide. In the continuance of these observations, valuable data will be furnished for studying the phenomena of the oscillations of the ocean.

Collections of Specimens from Soundings.—The charts of the coast survey exhibit a perfect representation of the character and configuration of the bottom of the ocean within a certain distance from land. The idea occurred to Lieut. Bache, in 1842, to form a collection of all the different materials obtained in the sounding operations, and he accordingly commenced reducing this idea to practice by placing in small bottles, duly labelled, specimens of all the materials found at the bottom. It was the intention of this lamented officer to form a large geological map by gluing on the surface of a suitable chart the several substances contained in the bottles, in their proper order, and thus at one view to present to the eye the means of generalizing the geological phenomena of the submarine formation. The plan of a map of this kind has not yet been carried into practice, but the collection of the materials of the bottom has been continued.

Besides the formation of the map above mentioned, the microscopic examination of these specimens could scarcely fail to develop some interesting facts, which maight prove of value to navigation as well as of importance to science. Accordingly, specimens of the materials of soundings were submitted by the Superintendent to Professor J. W. Bailey of West Point, who kindly undertook the examination of them. He finds that all the deep sea soundings are of the highest interest, being filled with organisms, particularly with those of the calcareous polythalamia, to an amount that is really amazing, hundreds of millions existing in every cubic inch. The specimen from latitude 38° 04′, longitude 73° 56′, from the depth of ninety fathoms, is crowded with remains, mostly large enough to be recognised by a practised eye without the aid of a magnifier. The forms which occur at different depths, and in different places, are so various, that they might serve to identify the position of the mariner, and thus furnish another illustration of the fact that branches of knowledge apparently the farthest removed from utility, are frequently found applicable to the useful arts of life. In this connection it may be mentioned that Professor Agassiz has accompanied Capt. Davis in his hydrographical operations connected with the coast survey, and has reaped a rich harvest of discovery relative to the animals which inhabit different depths of water. Every few feet of increase in the depth give changes in the character of organized beings which inhabit the ocean.

SPEECH

OF

MR. JEFFERSON DAVIS, OF MISS.,

ON THE SUBJECT OF THE

COAST SURVEY OF THE UNITED STATES:

Delivered in Senate of the U. S., Monday, Feb 19, 1849.

The Senate, as in Committee of the Whole, having proceeded to the consideration of the bill making appropriations for the civil and diplomatic expenses of the Government for the year ending June 30, 1850—

Mr. BENTON moved to strike out the clause appropriating $186,000 for defraying the expenses of the coast survey, including compensation to the superintendent and assistants, and to insert in lieu thereof the following:

"For survey of the coast of the United States, the sum of $30,000; and from and after the 30th day of June, 1849, the said survey shall be carried on exclusively by the Navy Department, under the direction of the President of the United States."

Several members having addressed the Senate on the subject—

Mr. DAVIS, of Mississippi, said—

Mr. PRESIDENT: The amendment offered by the Senator from Missouri (Mr. BENTON) offends against the advice of St. Paul, which tells us to "prove all things, and hold fast that which is good." It proposes to go back to an old exploded system, an experiment made in 1818, which, after years of lost time and millions of lost money, was finally abandoned. It is to abandon an organization more perfect than, I believe, any country has ever before possessed for such a purpose, and to return to one, because it might imitate that of Great Britain, the imperfections of which stand forth upon every map of the British island. Let any man obtain two hydrographic maps—take one issued by the Coast Survey, and one issued recently by Great Britain—and he will find that science and intelligibility stand forth as the prominent features of the one, and confusion in the other; sometimes, even, surveys marked by square lines where the lines of equal depth are curved, and can have no natural relation to the rectangles thus presented.

I was sorry to hear the chairman of the Committee on Finance propose that this matter should be investigated by a committee, and made the subject of a separate bill. It is before us, and we are as ready to decide it now as at anyother time.

Mr. ATHERTON. I did not mean to say that it should be made the subject of a separate bill.

Mr. DAVIS. It is useful and desirable that the question should not only be settled now, but that it should be quieted for all time. I believe more than one-half the valuable labors of that distinguished astronomer, Mr. Hassler, were lost to science and the country, in consequence of his constant wrangling with Congress to obtain appropriations. His mind was diverted from the pure pursuits of science, and he has, in consequence, left behind him comparatively little of those results which we should have expected from his high reputation.

I desire, therefore, Mr. President, that the Senate will consider the whole question now; and I hope that they will settle it by such a majority as was given in the House last session, where I think the vote stood 90 to 36 after a full discussion.

The object of the Senator from Missouri, in his amendment, is to give up the whole coast survey to the navy, and return to the law of 1818. Now, sir if the proposition had been to give up the whole to the army, I should have thought that there was more propriety in it. The original plan was a survey of the coast, and a nautical survey based upon it. Such was the idea of Jef-

J. & G. S. GIDEON, printers.

ferson, and the idea of Gallatin, who, in his letter addressed to scientific men of the day, has as clearly delineated a geodetic survey as language can describe.

Mr. Gallatin proposes—

1. The ascertainment, by a series of astronomical observations, of the true position of a few remarkable points on the coast. * * *

2. A trigonometrical survey of the coast between those points of which the position shall have been astronomically ascertained. * * *

3. A nautical survey of the shoals and soundings of the coast, of which the trigonometrical survey of the coast itself, and the ascertained position of the light-houses, and other distinguishable objects, would be the basis. * * *

Now, sir, if the basis of a nautical survey is the triangulation of the coast, then we had better refer the work over to the army than to the navy, if it is to be confined to one department; for they are more competent to make that geodetical survey which must be the basis of any useful nautical survey. If the purpose is merely to make a nautical reconnoisance along the coast, and make nautical charts, we have such now, made in our colonial existence. But, sir, of little value are they, without accurate determinations of latitude and longitude—without correct delineations of the coast—so that when the mariner approaches it he may recognise the prominent features that tell him with certainty where he is? It adds little either to the benefits of commerce or the navy; it adds nothing to science, positively nothing.

So far as I followed the Senator's argument, it was based upon the idea of the recurrence to a former law, and of producing economy and despatch in the work. Now, sir, as to the former law, the act of 1807 did not provide in terms for the use of the army and navy at all. So far from providing a plan to be executed by the army and navy, as the Senator's argument would lead one to suppose, it says nothing about the army and navy. It says that the President of the United States shall be, and is hereby, authorized to cause "proper and intelligent persons to be employed, and also such of the public vessels in actual service as he may judge expedient."

So far as the navy could be employed under this law, it must be constructively, from the use of the term "public vessels in actual service," which might apply to the revenue vessels as well as to those of the navy.

When Mr. Hassler was appointed superintendent for this work, one of his early difficulties was that the officers were not, technically speaking, under his orders; and after the work was discontinued and revived, Mr. Hassler, in 1832, wrote a letter which contained the clause that the Superintendent of the Coast Survey, the astronomer, or whatever he was called, should make actual observations in the field; that he should give orders and instructions to the officers of parties, and thus to guard against such a condition of things as had led to his former difficulty. It was to give him authority, and to avoid being reduced to the head of a bureau, instead of having an opportunity in the field to illustrate the science which he believed himself to possess. It was his ambition to be in the field, as it is that of the present Superintendent. He did not wish, as a mere bureau officer, as head of the department, to receive the reports of parties in the field. He wished to make astronomical observations, and to connect himself with the triangulation of the coast. These were not the terms imposed upon, but those sought by, Mr. Hassler, as a man of science. Has it been changed? Have there been any variations from the duties assigned to the Superintendent? If so, have they not been constantly increasing his field labors?

In the year 1832, when the system of 1807 was revived, we find distinct provision for the employment of officers of the army and navy. The President is authorized to "employ all persons in the land and naval service" for the survey of the coast, "and such astronomers and other persons as he shall deem proper." Now, the navy was specifically connected by law with the hydrograph of the survey. During Mr. Spencer's administration of the Treasury Departent and

organization was adopted giving the Superintendent the powers which the present Superintendent now exercises. Did this constitute a bureau? If so, it was a bureau of Mr. Hassler's. But, Mr. President, can that be a bureau which is a mere temporary employment? This is a mere temporary employment, without a fixed salary, and without commission of office. The whole ground on which Mr. Hassler claimed a right to continue in employment was, that the terms of his letter being accepted, constituted a contract. It was not a bureau *then;* it is not a bureau *now.* It was an office then, to which reports were made for examination, and results sent for computation; it is the same now, and in the same building, as in Mr. Hassler's time. What change, then, has been made in the organization?

I said, Mr. President, that the duties discharged were of the same character; but they have become more extended. The present Superintendent passes about eight months of the year in the field, engaged in astronomical observations, in triangulation, in magnetic observations, in measurement of bases upon which triangulations rest. Last year he was in North Carolina, Maryland, and New Hampshire; and the year before he was in Massachusetts, Maine, Mississippi, Louisiana, and Alabama—thus stretching his observations over the whole breadth of the Union. Last summer he took the field long before the adjournment of Congress, and returned after Congress had reassembled. He left, I believe, in the month of April, and returned after the commencement of the present session of Congress. Mr. Hassler made but two preliminary and one actual base of operations. Now we are operating upon four distinct measured bases. The old plan might have been conducted with one astronomer, for it commenced on one base, and was extended north and south. No man living ever could have seen it completed. When it had passed a certain point, say three hundred miles, it would have been necessary to measure bases of verification. In the present system, these bases have been measured and made the original bases of other triangulations, and in time become also bases of verification. Thus the work is divided into different sections, and various parts of the coast—some of them very dangerous—are brought under early examination, and promptly the benefits of the work are conveyed to every portion of the Union, and the time in which it may be completed reduced. Now, we have nine sections; and just to this extent, if the appropriations are sufficiently large, may the time be divided in which it is to be finally completed. Had the present Superintendent desired merely to get his salary, had he consulted his own ease, he surely never would have extended the survey so widely, and divided it into various sections, giving him the increased and increasing mass of work which now devolves upon him; shortening the period, according to this plan, in which the work will be completed, and, therefore, the term for which he can hold the office he now fills under the present Coast Survey organization.

Let me not be misunderstood. These remarks are not intended to reflect in any way upon the late distinguished Superintendent, or to disparage his labors. In the language of the present Superintendent:

"The survey, which was suspended by the act of 1818, was revived by that of 1832. The preliminary operations of 1816 and 1817 were but partially available on recommencing the survey in 1832, from which latter period, therefore, it dates its effective beginning. The first years were necessarily years of organization and instruction. The Superintendent, Mr. Hassler, had to systematize methods, to train up assistants, to cause the work to grow from a small beginning until it comprehended the various operations of a geodetic survey of the coast and included its hydrography. When the results accumulated, it was necessary to provide for their computation and reduction, and the preparation of maps and charts upon a plan suited to our extended coast, and the engraving of the maps. All these things were new in this country. The amount of knowledge, skill, and labor required to overcome these and other difficulties were hardly appreciated. The results show how large an amount of work had been done, and how the work was extending beneficially at the time of Mr. Hassler's death."

"Building upon this foundation, it was easy for Mr. Hassler's successor to give further development to the work."

As to the economy of transferring this survey to the navy, I should think nothing can be more manifest than that if it was assigned to a single corps, the compensation of which, and reputation in its prosecution, was not derived from the work, it would lose in expedition and increase in expense. Not only has this result been proved by the experiment of 1818, but the same conclusion should have been reached by *a priori* reasoning. What interest would they have; what dread of examination; what regard for public opinion? They will have their pay and professional distinction as connected with the navy, whether the Coast Survey be approved or not, whether it be continued or discontinued. And if we refer to foreign services, where surveys are conducted thus, it will be found that the expense bears no relation to that of our Coast Survey. This is established by the reply of the Secretary of the Treasury, recently sent to the Senate. He estimates the secondary triangulation and topography by the ordnance corps in Great Britain, exclusive of officers' pay, at sixteen cents two mills per acre—between twice and three times the cost of our surveys of the same kind.

The Secretary says he had not sufficient data to make an estimate for the foreign hydrography. From other sources I find that the hydrography executed by Great Britain (I read now a manuscript note) cost in two years, 1845–'6 and 1846–'7, an amount equal to the whole appropriation of the coast survey of the United States from its beginning to the present time. In the ten years past, it amounts to five millions of dollars, and this is besides her Arctic and Antarctic expeditions; it is also besides her trigonometrical surveys. This Bureau of Ordnance and Hydrography is misunderstood, or as to England misapplied. The ordnance surveys of Great Britain have no connexion with the hydrographer's office or with the hydrographical surveys. The ordnance survey of Great Britain is a geodetic survey of the whole kingdom, carried on by the ordnance corps of the army. It has cost, in the same period, 1,500,000 pounds sterling, which is equal to about seven millions and a half of dollars. It has been in progress since 1791; and if we examine the cost officially reported, we are startled by the amount of expenditure which we meet. Economy, then, can be no inducement to exchange our system for that of Great Britain.

But it is said that the navy desires this work. It is said that they are mortified because the work is not confided to them. Now, Mr. President, what part of this work is professional to the navy? Can it be any part of the land work? Can it be the determination of latitudes and longitudes on shore? Can it belong to the seaman's profession to make topographical surveys? The hydrographical part of the work is now in the hands of the navy—is entirely confided to the navy. Why should we put officers and men of the navy upon other than that part of the work they are best able to perform? They are now engaged in surveying the shoals, marking their outlines, delineating the curves of soundings at equal depths, determining the limits and depths of channels, and the character of the bottom. These determinations are based upon the points accurately fixed by the trigonometrical survey of the coast itself. When the distance from the shore is reached, beyond which the sights from the shore cannot be extended, it becomes necessary to anchor vessels, and make them new stations of observation. All this work, and the observations of tides and currents, is executed by the hydrographic parties, composed of naval officers exclusively, under scientific superintendence.

If the navy, Mr. President, is (as has been said) unemployed; if there be any portion of it which ought to be employed on this Coast Survey, and is not, the Superintendent has provided for them. He has thrown his bases wide over the coast—has divided the work into sections. It therefore lies ready, as the coast is surveyed, for such increase of hydrographical parties as the naval ser-

vice will permit, furnishing employment upon a scale which could not have been reached if the work had been continued on a single base of operations.

But what truth is there in the idea that the navy is seeking this work and cannot obtain it? Why, sir, there is now an application to the Secretary of the Navy for a hydrographical party for Charleston. The Secretary of the Navy may grant the requisition. I do not doubt his willingness to do so, if the interest of the service will permit it. But I have heard of his complaining of the frequent draughts by the survey on the navy.

The officers of the navy have shared fully the honors of the Coast Survey, having received full credit for the work executed by them. Where is the channel that has been discovered by them, that does not bear the name of the officer of the navy who discovered it? Where is the chart, that does not show the name of the officer by whom the hydrography was executed? I have not seen one. Gedney's name is indelibly associated with the harbor of New York, and that of Blake with the new channel in Delaware bay. I know of no reputation which the officers of the navy could gain from a work of this sort, higher than that which they now acquire as a part of this great system.

By attempting, as under the law of 1818, to combine topography, work not at all professional to the sailor, with the hydrography, credit was lost, not won. The Secretary of the Navy, Mr. Southard, in 1828, referring to the charts produced, says of them, that "they are unsafe, and in many instances useless and pernicious." There must be a system, organization, and connexion of the whole. In the emphatic language of Mr. Southard, "nor can such surveys be made without the aid of the means contemplated by the act of 10th February, 1807." Could this organization be obtained in any other way? Suppose an officer of the army charged with the conduct of the survey—would you require the officers of the navy to serve under him? If you place an officer of the navy in charge, then you must either take the highest rank in the navy, or confine yourself to those who are the juniors of your Superintendent. Here is at once introduced the jealousy of rank which does not exist under the present system. You lose, thus, the services of officers otherwise well suited to the work, and who, in independent positions, under scientific superintendence merely, would be glad to serve. This I think to be a very great drawback to efficiency. But there are branches of the naval service now filled by civilians, and some of them positions of very high emolument, which appropriately belong to the nautical profession. The naval officer should be able to build a vessel, and yet civilians are employed in this work. Engineers are employed, and some at high salaries, in building docks, &c. Steam engineers from civil life are also employed. Why should not the navy build the engines for their vessels, and direct the working of the engines which propel their vessels, as they would the sails? These are branches of the profession in which they can be employed, usefully and honorably employed, and which would not divert them from the proper pursuits of the sailor. But if an officer of the navy, of science and special information and rank, sufficient to carry on this great work, should be charged with it, how long would he continue in the post? An officer of professional enthusiasm, at the very first note of war, the first gun that comes booming over the sea, would disdain the functions of the savant. He would call for his sea-glass, instead of his telescope; his thoughts would be on the trunnions of cannon, instead of the pivots of observing instruments. His computing tables would be thrown from him, that his hand might grasp the sabre, and he stand with arms rattling about him, beneath his country's flag—upon his country's deck. If he would not do this, he would not be worthy to hold the station of an officer in the navy. Then, sir, in the hour of greatest need, he who had charge of the work would abandon it for service better filling hopes proper to his profes-

sion, and then you must seek a savant to superintend the work during war, and he must learn the organization of the establishment, under circumstances least favorable to instruction, and most demanding accuracy, activity, and efficiency.

But, sir, it has been asserted that our navy is idle and unemployed; that our present establishment is a war establishment; and that the annual appropriation of eight or nine millions, is therefore an expenditure without adequate return.

Is the navy idle? With even the small force which we keep in commission, our ships are in the four quarters of the globe, engaged in maintaining the police of the seas, and in vigilantly watching over the interests of American commerce. Their presence every where arms the functionaries of the Republic with greater consideration and power of usefulness.

Is the navy unemployed? If so, increase the number of vessels in commission, for we surely cannot have an excessive number afloat while our trade with China in so imperfectly protected; when we have not a single vessel on the coast of Sumatra; while our merchant marine and whaling fleet in the South seas ask in vain for the arm of the American navy to protect them, and enforce discipline in lawless and discontented crews; whilst our fellow-citizens abroad have again and again been indebted to the courtesy of British naval officers for services which their own Government is bound, by every consideration of justice as well as pride and policy, to render.

Is the navy on a war establishment? This is most easily answered by referring to the fact that even during the late war with Mexico, destitute as that country was of maritime power, authority was given to our Executive to increase the naval force during hostilities. With the restoration of peace this authority was annulled, and the navy reduced to its former narrow dimensions. There is enough, and more than enough, of appropriate duty for all the navy which we keep in commission. Let it then continue in its legitimate employments at home and abroad; not be brought from its ships to labor on shore in the solution of problems in geodesy and magnetism, which are not even cognate branches of a sea officer's education. The sea is the element on which they are to serve their country in war; the element on which they should be educated in peace.

I think the Senator is mistaken in supposing that our naval officers are chagrined or mortified at not being intrusted with these uncongenial operations of the CoastSurvey. They will, I doubt not, be far more gratified if he will extend the field of their labors upon the ocean, and open to them new roads to preferment in the line of their own profession.

The State by whose authority I am here, whose rights and interests it is my duty to guard and promote by all the power with which I am endowed, has much involved in the proper execution of this work, and she has claims of no common character to consideration for these interests. She has contributed without stint to support expenditures in other portions of the Union; she has seen the northern Atlantic coast the subject of special care, and rejoiced to see its harbors surveyed, its capes and islands crowned with fortifications, its shore glittering with light-houses and beacons, through storm and darkness to guide, to save, to welcome home, the canvass-winged birds of the ocean. But when she turns to her own coast, with winding channels and shifting bars and shoals irregularly presented, without charts of sufficient accuracy for the most common purposes of navigation, still less to determine where and how the hand of man may enlarge and render permanent the advantages of nature, has she not a right to demand, that this exact, scientific survey and investigation of her channels and shoals, and the great causes which may hereafter, as they have in times past, disturb and alter the one or the other, shall progress to its completion; shall bring to her door this the first contribution by the General Government to her commercial interests and maritime defence? Already this survey

has made important additions to the knowledge of our gulf coast; channels have been explored and delineated; new means of approach secured; the points for lights thus properly determined; the fact of changed depth in some of the most important avenues of commerce discovered and published; and now, when all seems hastening to a healthy maturity, shall we fell the tree with its unripe fruit to plant another, the product of which no one will contend can be better?

The interest of those whom I represent has prompted me to an examination more than ordinarily full of the organization and progress of the Coast Survey. In both I have found much to admire, of efficiency, economy, and order. Years of experience and patient toil, under men bounteously gifted by nature and rarely favored by education, have brought the system to its present state of perfection. Could I see where a pillar, a prop, a brace, a key, or a pin was wanting to the fabric, I should have pride in attempting to supply it, in coming to the aid of those past and present to whom the merit of construction is due.

We have been referred to the increasing appropriations for the survey of the coast, and this unconnected fact has been presented for the purpose of attack upon the conduct of the work. The value of the fact depends upon the relation of expenditure to product.

And now, Mr. President, what has been the result since the present Superintendent took charge of the work? Five years have elapsed since his appointment, from which to gather an answer to the inquiry. It is due to the memory of the former eminent superintendent, that we should recollect that he took charge of the work when in its infancy. That it was necessary for him to organize the survey, to train up assistants, and to make a beginning in the introduction of geodetical science into our country. But what have been the comparative results?—for economy is not to be measured by the thousands of dollars provided in any one appropriation, but from the return for money expended.

In the letter of the Secretary of the Treasury, before referred to, we find that the expenditure for twelve years—1832 to 1844—under the superintendence of Mr. Hassler, was $766,134 18, the annual appropriations ranging from $20,000 in 1832, to $100,000 in 1843, as the work became organized and developed. The expenditures are less than the appropriations. The expenditure from 1832 to 1844, is $766,134 18; from 1844 to 1849, $579,250 32; the expenditure of money, as seven to five; time, as twelve to five. The work done in the last five years exceeds that in twelve preceding years. If in less time for less money greater results are obtained, shall we complain of increased annual expenditures? Is not this economy? Surely, sir, no one will contend against an appropriation which hastens to completion a work which is more valuable as earlier completed. It is said this Coast Survey will not be brought to a close in forty years. Upon what calculation does this assertion depend?

The length of our shore line is estimated at twenty-eight thousand miles. It is certainly beyond that, because there are indentations of the coast not shown on the charts by which we estimate. Now, the work done in the year 1844, compared with the work of 1848, will be about as one to two. The average of the last five years as 1½ to 2. Upon this, then, we have the basis of a calculation as to when the work will be finished. The average, then, of the last five years is, to the work of 1848, as one and a half is to two; one-seventh of the coast, reckoning on the same maps from which the total shore line is estimated, has been triangulated in the last five years; in the next five years, at the same rate, we would achieve three-fourteenths—fifty per cent. over the latter. Then, in fifteen years, we should have finished nine-fourteenths; making, with one-third already accomplished, within a very small fraction of the whole coast. I do not say that in fifteen years we shall have no need of the Coast Survey, and that it is then to close. And more, sir, I hope it will not. In its progress, the parts of the coast which

are liable to change will have become definitively known, and the work may then be employed in ascertaining the changing of the shoals and shifting of the channels, necessary to the benefit of commerce. Besides, sir, I hope to add yet further to our coast. I would be glad to include the shores of the Gulf of California as those of one of these United States. I should be glad to gather in the Island of Cuba, so long desired. I should rejoice in the extension of our Union. I therefore speak of this term only as indicating the progress of the work; the time at which the survey of the coast on the Atlantic and Gulf of Mexico would be brought to a close at the present rate of progress. But, sir, our laws have been extended over a portion of the coast upon the Pacific, and we have made appropriations for building light-houses and placing buoys at the mouth of the Columbia river. To determine the places of these is an appropriate and necessary hydrographic service of the Coast Survey, and to commence the survey there, and render this service, parties have been despatched to the coast of Oregon, and not, as has been falsely stated in some of the papers, to California and New Mexico.

For the hydrographical survey a very accomplished officer of the navy was selected, and an able party was placed under his orders; for the survey of the shore, a party of civil assistants and officers of the army. It is worthy of remark, sir, that when the present Superintendent took charge of the Coast Survey, he found that the officers of the army had abandoned the work—had become dissatisfied—and the Secretary of War had refused their aid on the terms upon which it was asked. The present Superintendent, by avoiding a controversy which grew out of the requirement that the land parties should be equally divided between civil assistants and officers of the army, and by the judgment which he brings to bear on everything, has been able to draw them back to the work. When the war with Mexico broke out, he had eleven officers of the army thus employed; eight of them were taken away. He has applied for topographical engineers since the termination of the war—an application which has been laid over for the present by the chief of the Topographical bureau, until he can determine whether officers are disposable from the other wants of that department. An application is now pending before the Secretary of War for officers of the line of the army to aid in the survey of the coast. In the last report on the Coast Survey to the Secretary of the Treasury, the Superintendent expressed himself upon this particular point. He says:

"The number of officers and petty officers and men are regulated by the same department, on application from the officers of the navy commanding the hydrographic parties. These are transmitted through the Superintendent and Secretary of the Treasury as a matter of form; but the judgment of the officers is conclusive with me, and the requisitions are complied with or denied, at the pleasure of the Secretary of the Navy. The law requires that as many officers of the army and navy as practicable be employed on the work; and, independently of the desire to husband the direct appropriation, which I confess is a strong motive with me, and of the respect which I feel for the officers of both branches of the service, and of the gratification which official or private intercourse with them always gives, I am bound by the spirit, and even by the letter of the law, to apply for additional officers whenever they can be usefully employed on the work.

* * * * * * *

"Under the law, the organization of the Coast Survey contemplates the employment of civilians and officers of the army and navy. This triple organization brings the scientific and practical training of civlians and officers of the army and navy to its aid; a more permanent nucleus is supplied from civil life than the wants of either the military or naval service could yield, while entire concert of action is secured under a central authority, the department in which matters pertaining to the trade, commerce, and navigation of the country centre, in the name and by the authority of which the Superintendent acts. The scientific details, which careful study and the action of many minds viewing them from different points have matured, are made uniform throughout the work, and the whole proceeds according to a regular plan, carefully arranged, and having in view a definite result. The temporary character of the work is recognised as a cardinal principle, no permanent corps being organized to conduct it—a feature which has proved important in other works, and which, I doubt not, has its influence in this. Free scope is afforded for selection from the science of the country at large, or from either

branch of the military or naval service, under the heads of their respective departments, of those whom ability, knowledge, and opportunity unite in recommending for the service.

"As soon as the arrangements of the army in its new positions permit, I hope again to have the services upon the work of such of the staff and line officers as can be suitably employed, and can be spared from their regular duties."

That is his application of the law—such his desire to have officers of he army and navy seeking for more than he is able to obtain.

The Senator has referred to an article in the plan of organization of the Coast Survey of 1843, which requires that chiefs of parties detailed from the army and navy should not be relieved from the work without notice to the department having charge of it, and this, he says, puts the entire army and navy under the Secretary of the Treasury. The Senator surely must be aware that the Secretary of the Treasury has no power to detail an officer of the army or navy for the survey, but that is done by the head of their respective departments. Nor can it follow, as a legitimate construction of the article, that the department having charge of the work could refuse to allow an officer of the army or navy to be withdrawn by the head of the department to which he belongs, but only that notice shall be given, that the Secretary may not be embarrassed by the withdrawal of the chief of a party, without an opportunity having been given to supply his place and to provide for the prosecution of the particular work of which he may have had charge. Still more strange is the construction which would place the "*entire*" army and navy under the control of the Secretary of the Treasury, from the employment of a portion of it in the survey of the coast.

The investigations involved in the Coast Survey are of the most abstruse science, requiring computations of the highest order of mathematics and physics, such for example as the problem indicated by La Place in the Chamber of Deputies in 1817, and which has received its first solution, for the pride of American science be it remembered, by the present Superintendent of the Coast Survey. To determine the curvature of the earth, its exterior form, by the deflection of the plumb line, indicating the internal structure of the earth. This knowledge is essential to the exact determination of latitude, and therefore coupled most usefully and directly with the establishment of stations and with the accuracy of the survey. If there be officers of the navy, then, competent to this high reach of science, and, therefore, to superintend a geodetic survey, why do we not employ them to teach in the naval school? Why do we employ civil professors to teach midshipmen the elements of science? That seems to me far more professional than to undertake a work where the observations are astronomical or terrestrial—and the computations are for trigonometrical or topographical surveys, which can have no connexion with their profession.

I do not know how far the navy complain of not having their full share of this work. You will always find persons in the navy, as in other pursuits of life, complaining of their lot as compared with that of their neighbors. Many are no doubt anxious to go to the Mediterranean—anxious to go to the Pacific, and to take command of mail steamers. Two of them have left the Coast Survey for this purpose very recently. All desire the most eligible positions, and but very few in any vocation are ever content. My acquaintance is very limited with officers of the navy. My conclusions are derived from the few, but are very decided that in this, as on more memorable occasions, they are ready to co-operate with the army and share with them the good and evil. One of them—at this time an assistant in the Coast Survey—who is an honor to his profession, and who, if there be an officer in the navy competent to take charge of it, is, I doubt not, the very one—always commends in the highest terms the present organization of the Coast Survey. He takes every proper occasion to place in bold relief the successful labors of the Superintendent,

and would most deeply regret to see him driven from his position, even for the benefit of an officer of the navy.

I am anxious, Mr. President, to pass over these points as rapidly as possible; but I cannot neglect the statement which has been made of the existence of a bureau of ordnance and hydrography in connexion with the surveys Great Britain. The surveys made by the ordnance corps of Great Britain correspond very nearly to those made by our topographical corps. Their ordnance surveys are like our topographical surveys. Their hydrographical bureau is for hydrographical surveys; and by not having the two connected, it follows that the ordnance corps establish their stations, make their topographical survey, and then the hydrographical party must establish their stations also, upon which their hydrographical survey is based. The stations being independent one of the other, each must take independent observations, which perhaps never correspond, and produce disagreeing maps of the same localities. The Senator says we have a bureau of ordnance and hydrography, but it is for very different purposes from those which he seems to attribute to it. It is to supply naval ordance and munitions, to keep and issue nautical charts and instruments for vessels of war.

I have referred already to the expenditure of the ordnance survey of Great Britain; I will refer very briefly to their hydrographical surveys. I find for 1846, coupled with the hydrographical surveys, there are reported eighteen vessels, and these vessels of large tonnage—a large number of officers on board—a great many of them steamers—making the total tonnage upwards of 6,276. On the coast of England they have nine vessels, amounting to 3,201 tons, with sixty officers.

Vessels.	*Tons.*	*Stations.*	*Officers.*		
1. Beacon,	378	Mediterranean,	12		
2. Blazer,	527	Harwich,	7	(steam)	1
3. Bonetta,	319	Mediterranean,	6		
4. Columbia,	361	North America,	6	(steam)	
5. Dasher,	260	Portsmouth	7		2
6. Firefly,	–	Irish Channel,	7	(steam)	3
7. Fly,	485	East Indies,	12		
8. Herald,	500	Pacific,	10		
9. Lucifer,	387	Coast of Ireland,	7	(steam)	4
10. Pandora,	319	Devonport,	5		5
11. Philomel,	360	S. E. coast of America,	8		
12. Plover,	–	East Indies,	5		
13. Porcupine,	382	River Thames,	6	(steam)	6
14. Janarang,	500	East Indies,	12		
15. Shearwater,	343	Coast of Scotland,	6	(steam)	7
16. Sparrow,	160	Coast of Scotland,	5		8
17. Tartarus,	523	Coast of Ireland,	10	(steam)	9
18. Thunder,	472	North America & West Indies,	8		
	6,276		139		

On coast of England, 9 vessels, numbering 3,210 tons, and with 60 officers.
On coast of United States, 8 vessels, numbering 1,732 tons, with 49 officers.

This is the great establishment upon which their surveys rest, extending far beyond their own coast, at an expense such as is always to be found wherever the work is turned over to a corps or a profession not dependent for either its reputation or support upon the achievement of the work.

In relation to the amount which has been stated of the expenditure made by the navy for the benefit of the survey, I have taken the trouble to collect some facts. I find that the Secretary of the Navy, in reply to an inquiry growing out of the call of the Senate as to the expenditure made from the navy for the benefit of the Coast Survey, stated it to be $192,000 since 1844. This does not include the pay of the officers of the navy, which they would be entitled to if on leave of absence, but the difference between the leave of absence and sea pay, as the only amount which can properly be chargeable to the Coast

Survey. If it be supposed that they would not be on leave, but waiting orders, the amount would be less. The case therefore presents it in a most unfavorable form.

We find that the vessels employed were four schooners belonging to the navy; the rest either belong to the Coast Survey, or have been turned over from the revenue marine. The whole charge, therefore, which can be represented as an unseen contribution from the Navy to the Coast Survey, is the use of four schooners. It will be recollected, Mr. President, that for the revenue service we built some steam vessels, and they were found wholly unsuited to the service; and after the most expensive, fruitless experiments, they have been turned over to the coast survey; and running at low rates of speed, they have been found to answer a very good purpose.

The great expense of these steamers, their inapplicability to revenue purposes, and the expensive repairs constantly required, rendered it desirable to the treasury to get rid of them. In the Coast Survey they require few repairs; the consumption of fuel is very small, and a saving by transferring these vessels from the revenue marine, and substituting sailing vessels, as stated by Captain Alexander V. Fraser, will be from three to four hundred thousand dollars. So that the treasury has lost nothing by transferring these vessels to the Coast Survey.

The Senator from Missouri (Mr. BENTON) used a table. (I do not know where it was obtained.) It makes an exhibit of the annual expense to the navy of the hydrographical department of the Coast Survey, and of the number of vessels employed therein by Professor Bache. In this table, it appears, there are two hundred and nine thousand dollars annual expense to be charged to the Coast Survey, which was drawn from the navy. Now, sir, I do not find that the vessels here stated are used in the hydrography of the Coast Survey. It does not appear that some of them have ever been there. The officers, stated to be ninety-four in number, are actually forty-nine. The "Jefferson" has never been used in the Coast Survey; the "Gallatin" has been transferred from the Coast Survey to the revenue service temporarily in exchange for the "Ewing." Several of the vessels, viz., the Phœnix, Wave, Vanderbilt, and Walker? [Gerdes] are employed by the triangulation and topographical parties, and are sailed and manned exclusively at the cost of the Coast Survey. The cost of fuel and oil and contingencies, is paid from the Coast Survey appropriation. It is not too much to say of this table that not one of the ten columns which it contains is correct. Its erroneous character will appear from the following tables:

List of the vessels used in the hydrography of the Coast Survey in 1848.

Names.	Class.	Where employed.	No. of lieutenants.	Passed midshipmen	Clerks.	Total.
1 Bibb	Steamer (schooner)	Nantucket shoals	3	2	1	6
2 Gallatin	Schooner	Nantucket shoals	2	2	1	5
3 Nautilus	Schooner	Long Island Sound and south shore of Massachusetts	3	3	1	7
4 Petrel	Schooner	Hell Gate and New York harbor	1	2	1	4
5 Washington	Brig	Chesapeake and outer coast of Md	3	5	1	9
6 John Y. Mason	Schooner	Chesapeake and North Carolina	1	3	1	5
7 Legaré	Steamer (schooner)	Gulf stream and off-shore Long Island	2	4	1	7
8 Walker	Steamer (schooner)	Mobile bay and Mississippi sound	2	3	1	6

NAMES.	Number of officers stated in table of Senator from Missouri to be employed in hydrographical parties.	Number actually employed in 1848.	Error.
Legaré	10	9	1
Bibb	10	6	4
Walker	10	6	4
Jefferson	10	0	10
Washington	6	9	3
Ewing	6	0	6
Gallatin	6	5	1
Nautilus	6	8	2
Phœnix	6	0	6
Wave	6	0	6
Vanderbilt	6	0	6
Walker [Gerdes]	6	0	6
Petrel	6	4	2
	94	47	47

Error 50 per cent.

There are errors in the table in the number of vessels and the number of officers employed, making an expense of $209,000 for *one* year, when, by the report of the Secretary of the Navy, it appears that in *five* years it was $192,000—that is, in five years it was less than the amount stated here for one; or, if you include the whole pay of the officers of the navy, it will be $335,000 for five years, as shown by the auditor's statement to the Secretary of the Navy. Thus it will be about $67,000, instead of $209,000, per annum. At any event, the error is very great.

Official statement of the Fouth Auditor, showing the amount of difference between the sea-service pay and leave-of-absence pay of the officers of the navy engaged in the Coast Survey, from January 1, 1844, to December 31, 1848, the value of their rations, the pay of the crews of the vessels employed on the said service, and the value of their rations for the same period.

Sea service pay of officers subsequent to January 1, 1844	$207,584 25	
Estimated leave pay for the same period	142,757 16	
Difference	$64,827 09	
		$64,827 09
Rations of officers for the same period		11,998 60
Pay of crews		81,953 00
Rations of crews		33,886 00
Total (five years)		$192,664 69
Note of entire pay estimated at highest rate, or sea-service pay, (five years)		$207,584 25
Rations		11,998 60
Pay of crews		81,953 00
Rations of crews		33,886 00
		$335,431 85

Connected with British hydrography, "in the four quarters of the globe," instead of ten, there appear to have been, in 1846, eighteen vessels, at an expense of £178,000. The question asked by the committee of the House of Commons of the chief hydrographer was in relation to his assistants in the bureau, who had no more to do with the surveying than the clerks in any other bureau. The surveys are made by naval officers, and the number of officers

employed is not indicated at all by the amount of money expended, which is over and above their navy pay.

The following is a table of the expenditures for hydrography from 1837 to 1847:

Hydrography of Great Britain and Colonies.

1837–'38	£68,517
1838–'39	59,202
1839–'40	58,862
1840–'41	52,517
1841–'42	91,832
1842–'43	142,235
1843–'44	134,126
1844–'45	126,583
1845–'46	178,782
1846–'47	123,678

In the last two years an amount equal to the whole Coast Survey appropriation, and in ten years five millions of dollars. This is besides her arctic and antarctic expeditions; and besides her trigonometrical survey, which, from 1811 to 1847, cost £1,500,000.

The amount of expenditures for pay of officers and men employed in the hydrography of the Coast Survey, and which I have stated above, is to be found in the reply of the Secretary of the Navy to the Secretary of the Treasury—a document which I am sorry is not printed and in the hands of every Senator.

The salary of the Superintendent has been referred to; and the whole answer to that is, that no salary has ever been fixed by law. It is a temporary employment. The annual compensation originally made to Mr. Hassler has been continued to the present day. When he resumed his work in 1832, there were about four years—perhaps five—when the amount of $1,500 claimed for superintendence of Coast Survey and weights and measures was not paid him. In 1836, however, the terms of the appropriation bill referring to the Superintendent were used, and considered as covering the back pay, and the back pay of $1,500 per annum was given to him. His compensation to the close of his life was $6,000 per annum. The same rate has been continued, dollar for dollar, to the present Superintendent. There has been no change in the compensation. The duty has changed only by increase of the time in the field. He still retains, under the same organization, the same amount of compensation. It can be varied by the President at any time. As this might cause the present Superintendent to leave the employment of Government, it would be a serious evil, and in which the country would lose far more than the Superintendent. In justice I should state, that the researches on hydrometers for the revenue, and on sugars, have been superintended gratuitously.

But the next position taken was, that these observations concerning latitude and longitude were invading the proper duties of the National Observatory. Now, Mr. President, two observatories since the establishment of the telegraph wires may determine difference of longitude with great accuracy. But, how a fixed observatory is to determine the latitude of other places, I am wholly at a loss to imagine. The observatory can fix the stars; but, unless it is made locomotive, put upon wheels and carried over the country, it can have no power to determine the latitude and longitude of places. But this observatory is to be made the receptacle of the Coast Survey, instead of transferring it to the Coast Survey—the minor to the major part. * * * * *

And is it reasonable, sir, that this observatory take charge of the determination of the latitude and longitude of stations on the coast, those observations upon which all primary triangulations of the Coast Survey must necessarily rest? Shall they wait until this observatory can go over the country and determine the

latitude for them? The Coast Survey has employed observatories, as far as available, to make astronomical observations for stations: thus it could be done better than in temporary buildings, and at one-fifth the cost—that is, for about $200 a year; whereas it would cost about $1,000 to erect temporary observatories and provide observers. It is economy, then, to use these observatories; and when the law prohibited the construction and maintenance of an observatory by the Coast Survey, I can not conceive that it prohibited the use of observatories, so far as it contributed to the objects and economy of the work.

It was to avoid, I suppose, connecting the Government with the establishment of such an institution, and its maintenance, that the prohibition was made. When, sir, observatories are erected and maintained, and offer facilities for observation, surely it could not have been designed to forbid their use for temporary purposes. If it was astronomical observations which were to be excluded, why then, sir, authorize the appointment of an astronomer? If astronomical observations are to be made, surely they should be made under all the circumstances which give the greatest accuracy. Nor is it material, so far as accurate determinations of *longitude* are concerned, whether this observatory be upon the coast or far in the interior; all that is required is, that the line of a magnetic telegraph should pass through it, and the observatory at Cincinnati is as available for determining the longitude of New Orleans, Charleston, New York, Boston, or Portland, as a similar establishment at either of those stations of the coast.

The advantages, Mr. President, of a mixed organization for conducting the Coast Survey are fully shown by the working of the present system. The army and navy are brought together by a harmonizing link, a head not supposed to be prejudiced in favor of either the one or the other. The Superintendent of the whole lays down the plan, presses his land survey in advance of his hydrographical survey; and while the hydrographical survey, by observing points upon the coast, will test the accuracy and emulate the land parties, there can be no rivalry other than a generous one; there can be no jealousy between the two arms of the survey, no conflict of rank between the assistants and the savant who has charge of it, and binds the whole together by the fraternizing bands of science. The results are seen in the good feelings which have existed in the operations of this work, so far as I have learned, justifying fully the wisdom of the plan which was adopted by that Secretary of the Treasury who took the deepest interest in this matter, and who was the best qualified, probably, since Mr. Gallatin, to perfect the organization of the work. I now refer to the plan of 1843, and the regulations of the Hon. John C. Spencer. From that time to this it has continued. It is carried on now exactly under the organization of the original establishment, as modified by the regulations of 1843 and 1844; the Superintendent operating more constantly in the field, being about three-quarters of the year in open air, living in tents and schooners, making his observations, measuring his angles, measuring with still more wonderful accuracy the bases upon which these observations rest. It was fortunate, sir, that this work, when it lost its founder, was transferred to its present Superintendent—a man who, to the severest early training in science, combined simplicity, purity of character, and strict utilitarian principles, which he has always brought to those subjects intimately connected with the work. No wandering after vague problems, no seeking idle reputation by the discussion of questions which, however abstruse, were unconnected with the purposes before him; always intent upon the object—a survey of the coast—and to execute it according to the spirit of the law. He has brought his topography nearer to the coast, extending no further than the first high land or road, so as to limit it to the most narrow compass which would answer every purpose of navigation and coast defence.

Defence is certainly very intimately connected with the purpose of coast survey. Had Long Island been surveyed, and had we possessed a map of it during the revolutionary war, the difficulties which General Sullivan encountered would never have occurred. His letters to General Washington state that he was ignorant of the country. That want of knowledge of the country caused one road, which he did not know, to be left open. The enemy, informed of it, turned his position, made a feint in front, a real attack in rear, and defeat followed. The disaster which befel the army was the result of the want of a topographical map of the island.

And again, sir, to refer to the same period and locality. Had the bay of New York been known as well then as now, Count d'Estaing would have passed with his vessels of war into the harbor, and would have found the British without the power of effective resistance. Want of knowledge of that channel by the pilots sent to the French fleet, induced their commander to abandon, as a hopeless object, an entrance where there was really sufficient water for the draught of his vessels. These are two great facts, and present their own application.

Now, sir, as the most minute accuracy is required in topographical maps to serve for military operations, anything which improves their exactness or legibility is important. I saw, in the office of the Coast Survey two maps of New London and its vicinity—one of 1840, the other of 1847. In the first, two streams emptying into different bays had been considered one, and the officer who should have landed upon the coast and projected his operations by the first map would have fallen into a fatal error; and if in presence of an adversary better informed than himself, must have been defeated.

Nothing, sir, could have been a greater error than to suppose that the present Superintendent of the Coast Survey would prefer to be a bureau officer; he is a man of science, a practical astronomer—delights in the days and nights passed in the field of observation. If an attempt was made to reduce him to the condition of a mere bureau officer, he would assuredly resist it.

Shall it be objected, sir, to this Coast Survey that it has attained the highest scientific character, at home and abroad? That is with me a great object of pride and of gratitude. Nor, sir, has there been one scientific discovery, so far as I have been informed, upon the Coast Survey, which has not had direct and almost immediate application to the work. The bars for measuring bases give a good illustration of this. It was found that the best compensating bars which existed were liable to unequal expansion by heat during change of temperature. The compensating bars are of brass and iron, and these two metals have unequal capacities for heat and unequal conducting powers. In the base apparatus, made by the present Superintendent, under his orders, the bars are so proportioned in mass as to heat in equal times, the surfaces being covered by a varnish so as to render the absorption at the surface the same, or nearly so.

In former base bars, when the temperature was rising or falling, it was found that one would absorb heat more rapidly than another, and thus produce a variation in the length; whereas it should be constantly the same at all temperatures. To the present Superintendent of the Coast Survey, it is due to say, that he has brought this problem to a complete solution. He has, by changing the mass of one or the other metal, in a certain proportion, obtained a constant expression of length, with the exception of a small residual error; and he has even corrected that minute residual error, which had been shown by experiment still to exist, by the use of different pigments, so as to increase the absorptive power of one of the metallic surfaces. The equilibrium is now so perfect, that in a base six miles in length the maximum variation has been found from experiment to be so small a fraction that I fear to state it—I believe it is less than five-tenths of an inch.

He has also introduced another great improvement, namely, the process of electrotype multiplication of plates for the printing of the charts without wearing out the original engraved plate. It is a most beautiful application of an invention which only men of science could ever have understood, and still less have improved to actual use.

The remark has been criticised, though I think it was well said by one of the most distinguished assistants of the Coast Survey, that it has its mission of science; and happily has this mission been connected with useful purposes in this survey. When sounding for deep channels and samples of bottom, the earth was found to be filled with organisms; and when naturalists observed that different organisms were found in the different depths of the sea, as different animals at different heights of the land, one would hardly have seen how immediately this was to be connected with navigation; and yet it has been so far followed out, as to give good reason to believe that we shall find families to be classed below as above the great level of the earth; and that, finally, a hydrographic chart may be constructed which shall give us, by the nature of the organisms, a new mode of determining the longitude of the vessel as she approaches the coast. The latitude is always most easily determined by a vessel at sea; and if the longitude can be ascertained, the position is exactly known. If this can be learned, therefore, from the appearance of the bottom, by the aid of the lead, a great portion of the danger in approaching the coast is obviated. But the captain is relieved from the apprehension of any errors when he sees the whole line of coast before him, as presented in its bold topographical character, so as never to be mistaken.

By constant soundings of the sea, charts of the bottom so accurate may be made as to enable the vessel, when she approaches the shore, by the lead, to inspect the ground over which she sails, as by the glass to examine the appearance of the coast. These elements, added to observations for the latitude, determine the position without the possibility of a doubt as to the shore she is upon, what coast she is approaching, what channel she is in.

It is always a high astronomical problem to discuss the tides, and currents dependent upon the tides. This problem is now in the progress of a solution, which will throw new light upon this subject, and give an additional advantage to commerce which could not have been otherwise derived.

In a particular part of the main ship channel in the harbor of Boston, for example, this singular phenomenon is presented—that there is but one quarter of the ebb tide in which the current sets out of the harbor. In all others the current runs in, ebb or flow. So that a vessel passing out to sea on the ebb would, on reaching this part of the harbor, find the current adverse. These are facts which, though of great value to the mariner, it requires careful and well-directed observations to explore. The whole system of observations on tides and currents in the Coast Survey has been greatly improved, and the mode of discussing the observations brought to considerable perfection.

Then, too, sir, systematic observations have been made upon that great phenomenon of our continent the Gulf stream. It is somewhat remarkable that Doctor Franklin, about the year 1760, first observed the change of temperature in that Gulf stream, and indicated its application to useful purposes of navigation; and that it now falls upon his descendant, and one worthy to be a descendant of him whose common sense taught him the most difficult lessons of philosophy, and placed him in advance of the age in which he lived; whose science was of that daring kind which brought Jove's bolts from his charged battery, and held them by a silken string; so useful, that it lives on the cottage roof and in the parlor fire-place; so permanent, that his name is known where wisdom is honored and virtue respected—somewhat strange that this problem, first marked out by him, should descend, for its solution, to the present Superintendent of the Coast

Survey, the great grandson of the original discoverer, and that the most extensive observations should have been made by a brother of the Superintendent, a gallant sailor, who, devoted to the honor of his profession and the duty in which he wasengaged, lost his life in the exploration of the character of this phenomenon, and left behind him labors which have not yet been properly appreciated.

Here is another element by which to determine the longitude of vessels approaching our coast—the temperature of the water. When the line which separates the cold water near the coast from the hot water of the Gulf stream, shall have been accurately laid down, the approximate longitude will be known by an observation of the thermometer. This requires careful and repeated observation to fix the limits of change of temperature by season and in different years. The high temperature of this ocean stream, and its ceaseless flow, render its position of primary importance to the navigator near our Atlantic coast.

I must not, Mr. President, dwell upon the great number of discoveries of channels, sunken rocks, shoals, and bars, every one of which may, in a single hour, save to the commerce of the country more than the whole Coast Survey has cost from its commencement. Many of these shoals, if accurately laid down in previous nautical charts, would have saved the wreck of vessels; by which, from the mere duties upon the goods wrecked, we lose more than would have been sufficient to furnish a complete survey of the portion of the coast where these disasters occured.

The maps are in rapid progress of publication. The present Superintendent has issued twenty-one distinct maps, and a large number of copies have been printed and distributed, a number of preliminary sketches have been prepared, to give the earliest information to the public, to show a channel or harbor useful to navigation and beneficial to commerce, or a shoal or rock to be avoided.

Now, Mr. President, after this long term of years, and when this minute examination of the coast has been extended continuously from the southern limits of Maine to the northern limits of Virginia; when the work is going on in seven of the nine sections into which the coast has been divided; when five bases have been measured, and the work is progressing in every State but one on the Atlantic and Gulf of Mexico; when we of the extreme South, who have contributed to its support, are about to derive some advantage from it, what justice is there in abandoning it, and going back to the exploded scheme of a nautical survey, which has once failed to furnish such maps and charts of the coast as we require? I have the evidence before me from insurance companies, chambers of commerce, scientific associations, all bearing the highest commendation to the mode in which it is now conducted. (See appendix.) It has been submitted to the closest scrutiny of scientific men, and has obtained their approval. Then, sir, I ask, can we abandon a work bearing such useful fruits, fruits so honorable to the commerce of the country, at a time when its abandonment would operate so unequally to different portions of the Union, and resort to that which has been tried, fully tried, and which has been found to contain the inherent element of its own destruction?

Mr. BENTON, * * * *

Mr. DAVIS, of Mississippi. A question has been asked which I feel disposed to answer before the adjournment—the question whether the navy is, in fact, incompetent to conduct the hydrographical survey. The answer to this is, that they do conduct it, and nobody else conducts it but the navy. The whole of the portion of the work which is professional to the navy is confided to them. The only difference between our survey and that referred to, of England, arises from the fact that the navy conducts our hydrographical survey in connection with the trigonometrical surveys. Of course, instead of being compelled to make their own observations, and to fix their own stations upon which

to base their hydrographical observations, they derive their points and shore line from the land parties; this is the economy of our organization. Surely it is no discredit to the navy to suppose that those who are trained to topographical labor upon the shore would execute it better than those whose lives are spent upon the waters, and whose profession is upon the water. The work upon the land is not appropriate to them; it is not their own element; and I cannot believe that any proud sailor of the American navy would wish to rival an officer of the army in topographical survey, or to rival the *savant* in the computation of astronomical phenomena, or in the making of astronomical observations. It is not his profession. His pride is in his profession. His glory is to be gained there, and the laurels which now crown the navy, and endear it to every American heart, have been gathered at sea in the face of the enemy. Hydrographical surveys are usefully and properly executed by the navy in time of peace. They constitute a school in which the American sailor is instructed, and prepared for the high contingencies of war. In referring to the work on land as the more appropriate duty of the army officer, I make no invidious comparison between the naval and the army officer. I make no reflection upon the talents of the officers of the navy. This is not the work of talent. It is the work of training, of preparation, of close study, of extended science—such as the officer of the navy cannot acquire at sea; and if his early life were to be devoted to such studies on shore, his nautical experience must necessarily be very limited—his character as a sailor sunk in exact proportion as his character as a *savant* rose. I should dislike very much to see any prejudice or jealousy excited in the navy; there is no necessity for it. Instead of reducing their professional pride, I desire to exalt their ambition in those things which are entirely professional to them. I attempted, to-day, to point out new fields in which they may be employed.

I did not certainly intend to cast any reproach upon Mr. Hassler. On the contrary, if I was not complimentary to him, I intended to be so. If I did not state as a reason for the difference in the progress of the work under the former and present Superintendent, the embarrassment to which he was subjected, and the difficulty of organizing a new work under a new system of which he was the founder, I failed of doing what I intended. It was my intention to draw no invidious comparison. I was comparing—not appropriations—the Senator mistook me there—but expenditures; not the money appropriated, but the money actually expended—dollars, years, and work. Mr. Hassler organized this work. The present Superintendent took it as he found it.

I cannot allow this occasion to pass, sir, without again saying that I made no invidious comparison. In defending an organization which I considered essential to success in the Coast Survey, I compared, as I considered it my duty, the expenditures, the time, and the labor. I attempted to show that the work was progressing rapidly, and even went out of the appropriate line of my argument to guard against being misunderstood as disparaging the works of the former Superintendent, to point out the disadvantages under which he labored. It is to me a matter of pride, sir, that the reflection once made that no American could be found to take charge of the work, has proved so untrue. An American has been found, who has not only been able to discharge the duties of his office, who has not only been able to keep pace with science, but who has been foremost in some of the most difficult investigations, and has attained results for highly useful application to the necessities of commerce and the perfection of the work with which he is charged; often passing before, never falling behind, the improvements of the age, he has elevated our scientific reputation abroad, and is at home justly the object of American pride.

APPENDIX

TO

Speech of Hon. Jefferson Davis, of Mississippi, on the Coast Survey, delivered in the Senate of the United States, February 19, 1849.

REPORT *of a Committee of the* AMERICAN ACADEMY OF ARTS AND SCIENCES *of Boston and Cambridge, on the United States Coast Survey, unanimously adopted at a meeting held February 6th*, 1849.

[Communicated by Dr. Asa Gray, Corresponding Secretary.]

The committee of the American Academy of Arts and Sciences, to whom were referred the reports of the Superintendent of the United States Coast Survey, and also the letter of the Superintendent requesting the opinion of the Academy thereupon, respectfully submit the following report:

The present Superintendent of the Coast Survey of the United States was designated in 1843, with extraordinary unanimity, as the proper successor of Mr. Hassler, by the science of the whole country. It was believed that his great scientific capacities, nurtured at West Point, and grown to maturity under the most favorable opportunities for development in his own country and during his European travels, united with his admirable judgment and enlarged administrative ability, were precisely adapted to the conduct of this national work, so important to commerce and navigation, and so interesting to science. After the lapse of five years from the date of his appointment, it is deemed reasonable to comply with Professor Bache's request to make a careful examination of his labors, and inquire if the high expectations which had been formed have been realized; if there has been so rich a harvest of valuable results as might have been anticipated; if the best methods of observation have been uniformly adopted; and if the survey has been conducted throughout with proper economy and despatch. Your committee have made this examination to the best of their ability, and have thought it advisable to present their conclusions in as simple and condensed a form as possible. The tone of the report is necessarily laudatory, for the committee are persuaded that the minutest and most conscientious scrutiny will find everything to approve and nothing to condemn.

1. The methods and instruments of observation appear to be, in all cases, the most convenient and accurate which are known; while, in some striking instances, they are such as were not known or tried in geodetical operations before they were introduced upon this survey. It is, moreover, grateful to record that some of the most important of these improvements are of American origin. The committee beg leave to refer to some examples.

The apparatus for measuring the base lines is so portable that six and three-fourths miles are measured in ten working days, and so accurate that the whole amount of possible error in this distance would not exceed one-half an inch. This beautiful apparatus, which is incomparably superior to any which has ever before been adopted, is in principle and combination the invention of the Superintendent himself. It is a compensating system, and is in this respect closely allied to the elegant arrangement invented and used by Mr. Borden in the survey of the State of Massachusetts, but the method of compensation is novel and original in an essential and characteristic feature.

The method which has been finally adopted for the measurement, astronomically, of differences of latitude, is that which was invented by Captain Talcott, late of the Corps of Engineers of our Army, and which had not before been used for geodetical purposes. A full description of this method has been recently published in an unusually handsome form by the Topographical Bureau of the War Department, in a memoir written by Captain T. J. Lee, which con-

tains some examples from the Coast Survey observations. From this publication, it appears that the latitude is given, by a single night of observation, to the fraction of a second of arc, and that in four or five nights it can be determined with the minutest accuracy of which astronomical measurement is susceptible. The instrument employed is of simple construction, and of little cost, while its accuracy must render it available for some most delicate geodetic and geological researches. It is not impossible that, in the hands of a skilful geologist, it may aid in determining the various densities of the crust of our globe, and thereby serve as a divining rod for detecting its internal wealth; and it may thus give birth to a new species of practical astrology.

The use of Morse's magnetic telegraph for the determination of astronomical differences of longitude was too obvious to escape early notice, but it was reserved for the Coast Survey to ascertain its practicability as an exact method. This has been done by a series of refined and careful observations made under the direction of Mr. Sears C. Walker, from which it appears that differences of longitude thus determined can be employed in the measurement of the earth in a direction perpendicular to the meridian. This conclusion is of great importance in reference to the survey of a coast, which deviates from the arc of a meridian so much as that of the United States. The introduction of clockwork into the magnetic operations will undoubtedly contribute to their accuracy, although it remains to be seen which of the different plans which have been devised will be the preferable one.

Professor Bache's method of employing the great theodolite in the primary triangulation must command the admiration of experienced observers for its conscientious accuracy, and its skilful and faithful determination of every correction and every source of error. His measured angles have rewarded his patience and perseverance, by submitting to the usual tests with a uniform exactness which has never been surpassed, and which proves that one-fifth of a second of arc is the greatest error to which any one of his angles is liable. This extraordinary accuracy is not attained at any sacrifice of time; but, on the contrary, the present Superintendent has completed the observations at each station in much less time than was required by his predecessor, because he has rejected an unnecessary and injudicious rule in regard to the selection of days of observation.

All the other portions of the field work, whether of the reconnoissance, of the primary, secondary, or tertiary triangulation, or of the topography or hydrography, and also the office work, are distinguished for the same scrupulous regard to accuracy and despatch. The observations, indeed, which are made in the field by one set of officers, are reduced and plotted by others in the office, so that there can be no danger of any deception, and every thing must be as good as it appears. The observations of the Superintendent himself are not excepted from this ordeal.

The committee cannot pass from this head of their inquiry without expressing their commendation of the beautiful execution of the charts, and of the wise liberality with which they are furnished to navigators at a trifling cost.

2. The survey has already embraced a very extensive portion of the coast, and numerous discoveries have been made of the highest importance to navigation. "The field or office work of the survey has been carried into every State on the Atlantic and Gulf of Mexico, except one." Every year results have been obtained of a mercantile value incomparably superior to their cost, and which would be sufficient to pay, again and again, for the whole year's work. To say nothing of the many important discoveries of useful channels, or of hidden and unknown dangers, in Long Island sound, in Buzzard's, Massachusetts, Chesapeake, and Mobile bays, who can estimate the value of Ged-

ney's channel* to New York harbor? Of the determination of the changes in the main ship channel, which have been so gratefully acknowledged by the Chamber of Commerce of New York; or of Blake's new channel in Delaware bay; or of Davis's discoveries of the shoals in the vicinity of Nantucket, for which the insurance offices of Boston and New York have acknowledged their obligation; is not each of them separately worth the whole amount which has been expended upon the work? But leaving these remarkable discoveries to the merchants and sailors, who are most competent to appreciate them, your committee would draw the attention of the Academy to some other results, of a less practical, but no less scientific interest.

3. From the variety of his scientific attainments, the attention of the Superintendent has been readily drawn to all classes of observation which would conduce to the progress of science, and which could be made by himself or any of his parties without obstructing their other duties. Thus the abstruse problem of the figure of the earth will undoubtedly receive its due consideration, when the primary triangulation is completed; and also the local variations of figure in connection with those differences of internal density, the detection of which is already to be enumerated as one of the scientific discoveries which have been made upon the survey.

The intricate problem of the tides, also, which is still so defective, notwithstanding the labors of Laplace, Airy, Lubbock, and Whewell, will undoubtedly receive new development from the observations of the survey, and the laws of the tides upon the American coast will be ascertained.

The exploration of the Gulf Stream, which was commenced by Lieutenant Davis, and so indefatigably pursued, even to the sacrifice of his life, by the lamented George M. Bache, has led to results which are of profound scientific importance; and the deep sea soundings, which have been examined by Prof. Bailey, are also replete with interest to the naturalist.

4. Your committee have few data for arriving at any definite conclusion with regard to the extent of the economy with which the survey has been conducted. They are not, however, aware of any objection to the comparison which has been instituted by the Superintendent with the surveys of the Land Office, and which is very favorable to the Coast Survey. There is certainly no appearance of waste or extravagance in any respect; there are no excessive salaries, no idle attachés, nor any apparent disposition to pay too much for services rendered. There seems, on the contrary, to be an anxious desire to husband the appropriations of Congress, and to derive from them the largest possible return of valuable results. It is especially deserving of notice, that the Superintendent has manifested the wisest and most unselfish economy in asking for large appropriations, in order that he may press forward the work as rapidly as possible to its final completion.

In conclusion, it is the deliberate opinion of the committee that the present Superintendent of the United States Coast Survey has, by his able and judicious, his energetic and economical, administration of this great national work, raised it to the highest state of successful activity and deserved popularity, and that he has thereby fulfilled the high expectations which were raised at his appointment. All of which is respectfully submitted by

Peirce

BENJAMIN PEIRCE, J. I. BOWDITCH,
DANIEL TREADWELL, JOSEPH LOVERING.

AMERICAN ACADEMY OF ARTS AND SCIENCES,
Boston, 6th February, 1849.

The committee was appointed at the quarterly meeting of Wednesday, January 31, 1848.

*Gedney's and Blake's channels were discovered during the administration of Mr. Hassler.

Memorial of the MARINE SOCIETY of Boston, in relation to the Coast Survey.

To the honorable the Senate and the House of Representatives of the United States in Congress assembled:

The undersigned respectfully represent, that they were appointed, on the 6th instant, by the "Boston Marine Society," to act upon the following vote, passed on the day named:

"*Resolved*, That this Society has heard with regret that an attempt has been made to impair the present useful and efficient organization of the Coast Survey, and that the committee charged with the matter relating to buoys and beacon on Nantucket Shoals be authorized to address Congress, if deemed expedient, in the name of the Society, in order to prevent any action which may tend to injure the efficiency of the Coast Survey."

Wherefore, the undersigned pray that no change be made to curtail in any way the plan as laid down and submitted to Congress by the Superintendent of the Coast Survey in 1846; but that the appropriation be made from year to year, so that the progress of the survey may be simultaneous in every section of our coasts. (Signed) R. SOULE,

President Boston Marine Society.

R. B. FORBES,
W. A. WELLMAN,
THOS. B. CURTIS,
Committee.

BOSTON, *Feb.* 15, 1849.

Memorial of the INSURANCE COMPANIES *of* BOSTON *in relation to the Coast Survey.*

To the honorable Senate of the United States:

Having discovered that notice has been given in the Senate of the United States of an intention to ask for the renewal of the law of 1818, concerning the Coast Survey of the United States, by which the employment of citizens upon the work was prohibited, and believing that the real effect of that law would be now, as it was in 1818, to destroy the organization and arrest the progress of this important work, the undersigned, representing the interest of the insurance offices in Boston, beg leave to present to your honorable body the following memorial:

The undersigned, being constantly concerned in the security of the navigation of our own shores, have watched with interest the condition and progress of the Coast Survey, and being satisfied that every year it is rendering very valuable service to the commerce of the country by its accurate charts, and by its important discoveries, would earnestly pray against any movement by your honorable body that would cause an interruption to its useful labors.

Your memorialists are satisfied that the present organization of the Coast Survey, which embraces, in one combination, the most distinguished private science and skill of the country, and the professional science, ability, and zeal of the military and naval services, is better suited than any other to insure the prosperity of this great national work, to provide the best judgment in directing its plans of operation, and the greatest skill and fidelity in their extension.

Your memorialists have witnessed, with great pleasure, the liberal support that has been given to this work during the last four years, and believe that there is no public undertaking more worthy of the patronage of Congress than this, which has for its objects to give facilities to trade, to enlarge the bounds of useful knowledge, and to protect human life.

Your memorialists trust that this liberal support will not only be continued, but also extended, as far as may be consistent with economy and required by

useful progress, and do earnestly entreat your honorable body to take no action that will impair the usefulness of this important branch of the public service.

J. INGERSOLL BOWDITCH, *Pres. American In. Soc.*
LEMUEL POPE, *Pres. Boston In. Co.*
C. CURTIS, *Pres. Neptune In. Co.*
JOHN G. NAZRO, *Pres. Tremont In. Co.*
SAMUEL QUINCY, *Pres. Hope In. Co.*
SAMUEL W. SWETT, *Pres. National In. Co.*
NATH. MERIAM, *Pres. Mercantile Marine In. Co.*
ROBERT B. WILLIAMS, *Pres. United States In. Co.*
FRANCIS WELCH, *Pres. of the Franklin In. Co.*
JOSEPH BALCH, *Pres. of Merchants' In. Co.*
THOMAS LAMB, *Pres. of Washington In. Co.*
P. W. HAYWARD, *Pres. of Suffolk In. Co.*
FRANCIS BACON, *Pres. of Boylston In. Co.*
JOS. H. ADAMS, *Pres. of N. E. Mutual Marine In. Co.*
JOHN CLARK, *Pres. Equitable Safety In. Co.*
JNO. L. DIMMOCK, *Pres. Warren In. Co.*

BOSTON, *Jan.* 19, 1849.

REPORT *of a Committee of the* CHAMBER OF COMMERCE *of* NEW YORK *on the United States Coast Survey.*

The act for the survey of the coast passed in 1807, and several plans were submitted for carrying out the law. The one proposed by F. R. Hassler, esq., who had been engaged in a triangulation of Switzerland, viz., that by means of a series of triangles extending the whole length of our country, was approved of.

The difficulty of obtaining the necessary instruments and the standards for the measures of length at that time, Mr. Hassler being obliged to visit Europe for the purpose, and the declaration of war during the period of his absence, prevented the actual field operations until 1815, and immediately after, in 1818, a stop was put to the work by the passage of a law, the purport of which was to employ none but officers of the army or navy on the work. This hasty legislation placed Mr. Hassler out of the work, and left it without a head; and although the instruments were at hand, and moneys expended by the Government in surveying our coast in several parts, yet nothing was done, during a period of fourteen years, that could be considered of *any use whatever* in continuing the work itself, and very little knowledge was given to the world as to the hydrography of our own shores by any of them. In fact, at the period of 1832, when the act of 1818 was repealed, and Mr. Hassler again placed at the head of the work, there was not on our whole coast six light-houses whose position was known nearer than one minute of latitude, and the surveys in possession of the Government gave little or no information as to the position either in latitude or longitude. The hydrographical offices of other nations could not obtain the position of any of them, and an official list, published even after this period, was worse than useless.

At the recommencement, the corps was organized under the Treasury Department; and at the period of Mr. Hassler's death, 1842, the work had been extended from the base on the south side of Long Island to the western part of Massachusetts, and into the eastern part of Maryland, but had not been completed; since which period, the work has been extended into and commenced in every State on our sea-board with a degree of energy peculiar to our country; so much so, that the progress now of the Coast Survey yearly

surpasses that of any other country at any time, and stands in bold relief with any of our great undertakings.

The committee trust that no experiments in the way of reduced appropriation or diminution will be made by Congress to put in jeopardy a work in which the whole commercial world are interested; and that, while Great Britain is surveying the West Indies and her possessions to the north, and throwing the knowledge broadcast to the world, we will not be behind hand.

Independent of the annual appropriation for the ordnance survey of Great Britain, which includes the triangulation and topography, the expenditures for hydrographical purposes (exclusive of Arctic and Antarctic expenditures) were, during the period of the years (from 1837 to 1847,) £1,036,334, *upwards of five millions of dollars.* A large part of this amount was expended at home, while, as Rear Admiral F. Beaufort, hydrographer, states in his report, "on an average of the last few years, the admiralty have employed on foreign surveys 11 vessels and about 950 men; and that, however incumbent on this country to take the lead in such efforts, still this amount of force, if properly distributed and constantly employed, may be fairly considered as our full share of that great duty which all maritime nations owe to the interests of navigation."

While the first commercial nation is thus anxious to do her share in extending hydrographical knowledge over the globe, we would ask of Congress such liberal appropriations as will enable the department having charge of the work to finish the survey of our own coast in a manner creditable to the present advanced state of science, and to extend it to our Pacific shores, so that "our full share of the great duty" shall not be wanting.

(Signed) GEO. W. BLUNT,
M. H. GRINNELL.

RESOLUTIONS *of the* CHAMBER OF COMMERCE *of* NEW YORK *in relation to the Coast Survey.*

CHAMBER OF COMMERCE, *New York, February 6th,* 1849.

At a regular meeting of this Chamber, held to-day, the following resolutions were presented and unanimously adopted, and ordered to be transmitted to the Senate and House of Representatives:

Resolved, That, in the judgment of this Chamber, the continued prosecution of the Coast Survey is due not only to the interests of our merchants, but as an act of simple though tardy justice to the sea-faring classes of the United States, whose energy, skill, and fearlessness, have made our flag known in every part of the navigable globe.

Resolved, That it might be deemed a matter of just reproach, that the second commercial nation of the world should consent to owe a large debt to other nations for hydrographical knowledge, without making adequate efforts to repay the debt in part, as the United States are now doing through the U. S. Coast Survey.

Resolved, That we ask of our Senators and Representatives in Congress by their votes to keep up the appropriation necessary for this great and useful national work, conducted as it is with science, energy, and economy.

Extract from the minutes.

Attest: (Signed) JAMES G. KING, *President.*

(Signed) P. M. WETMORE, *Secretary.*

REPORT *of a Committee of the* AMERICAN PHILOSOPHICAL SOCIETY *of* PHILADELPHIA *on the Coast Survey.*

The committee to which was referred a letter from Prof. Bache, Superintendent of the U. S. Coast Survey, asking the consideration by the society of

the scientific character and results, of the practical results, and the progress of the survey, and inviting any suggestions tending to improvement in the different departments of the work, respectfully submit the following report:

In coming to these conclusions, they have necessarily assumed the correctness of the statements as to the progress and results of the survey made by the Superintendent in his annual reports to Congress. The committee are not aware that any doubt has ever been expressed as to their correctness; and had they been questioned, it would have been impossible for the committee to verify them. The question for their examination appeared to them therefore to be, not whether these results have been attained, but whether, in a practical point of view, they justify the yearly expenditure authorized by Congress, and whether their scientific character is such as the means at the disposal of the Government justify us in expecting, and such as is likely to meet the approbation of scientific men in our own and in other countries.

It cannot be a matter of surprise that the American Philosophical Society should undertake these inquiries, since, originally consulted by the Government as to the propriety of instituting such a survey and the manner in which it should be conducted, they have ever since, on all proper occasions, testified their interest in its efficient prosecution.

The object of such surveys as that which is now in progress along our sea coast, is to determine with accuracy the position of every conspicuous fixed point within the limits of the survey. By which determination, and by the aid of the conventional marks for different objects used in topographical drawing, an accurate representation may be made of the country surveyed, so that the relative position of any objects, their distance apart, the character of the country between them, and their elevation above the level of the sea, as well as the position and figure of shoals, the depth of water upon them, and the nature of the bottom, the direction and force of the currents, whether oceanic or tidal, the time of high and low tide, with its rise and fall in our principal ports, may be easily and precisely known.

There is scarcely a branch of physical science (chemistry alone excepted) to which such a survey is not in the highest degree useful; but its practical results are those of the most prominent importance. It permits the sailor, who comes for the first time upon our coast, to recognise with accuracy his position, and direct with precision his vessel to its port. It warns him of the dangerous shoals which lie in his path, and indicates to him the existence and strength of currents which may retard or assist his progress. And if he be surprised by a tempest which jeopards his safety, it guides him to a harbor of refuge where he may await more favorable weather. It enables the Government to select with certainty the best situations both for works intended for the defence of the coast against hostile invasions, and for light-houses and buoys which are to serve as guides to our commerce; and, when extended inland, it indicates the best routes for internal communication, the obstacles to be overcome in its establishment, and the resources which the country presents for its maintenance. It may be truly said that a government owes such surveys as this to its citizens, and since they inure in the highest degree to the benefit of all, and since the means of accomplishing them are possessed by the Government only, it is one of the most important duties to have such surveys executed in the most complete manner possible.

In our system of finance the greater part of the revenue of the Government is derived from the duties paid by our commerce, and the demand that a small portion of the immense wealth, which is thus annually poured into the Treasury, should, for a few years, be expended in protecting the lives and property of those thus contributing, is so plainly just as to need no argument in its support.

The actual receipts from customs in the Treasury, for the fiscal year ending June 30th, 1848, was $31,757,070 95, and the estimated receipts for the next year $32,000,000. The appropriation asked by the Superintendent for the Coast Survey, for the same year, is $186,000, 1-172 of the receipts, or 58 cents on the hundred dollars. Nor is the policy, in a financial point of view, less evident. The committee has found it impossible to get any definite information as to the average amount of dutiable goods yearly wrecked upon our coast; but the actual duties paid in 1848, by five packet ships, in the port of Philadelphia, was $243,942 15, or an average of $48,788 each. A loss of duties equivalent to those paid by four such ships on our coast would amount to more than the estimate for the expenses of the survey of 1849; the value of one such ship and cargo would probably have defrayed all the expenses of the work for the two years 1847 and 1848. The loss of time by ships compelled, for want of accurate charts, to await far from the shore the arrival of pilots, in place of running close into land where they may be at all times found, and the higher rates of insurance against dangers of which just enough is known to render them formidable, but not enough to permit them to be avoided, must also be added in the calculations of the pecuniary advantage of such a survey; while the continually recurring loss of life by shipwreck, and the immense amount of human suffering caused by the detention of crowded passenger ships off our coast, especially in the winter season, forms an item of which no estimate can be made in such a calculation.

If, then, our coast be peculiarly liable to such dangers as these, if it be dangerous in its character and comparatively unknown, the duty of the Government to make and publish such charts as shall give every possible facility and safety to our commerce cannot be denied. That this is the character of our coast is almost too well known to need assertion; but if proof be required, we have but to turn to the reports of the survey, for the last few years, to satisfy the most incredulous. Within that time channels of vast importance to commerce, before altogether unknown or unused, have been discovered in the harbor of New York and in the Delaware bay; and six unknown and dangerous shoals have been discovered, within the last year, lying in the direct track of the commerce between New York and Europe, as well as in the coast trade between the former place and New England. Of the Delaware bay, until the recent publication of the maps of the Coast Survey, there was no chart upon which reliance could be placed. Some of the most dangerous shoals were placed from three to seven miles in error. The light-house at Bombay Hook, a neighborhood at one time noted for the number of vessels grounded there, was five miles out of place; and the mouth of the bay, between Cape May and Henlopen, was represented from 16 to 18 miles, when the survey shows it to be but eleven and a half. Yet, over this unknown and dangerous ground passed yearly, according to a report made to the Government, about the year 1837, by Major Bache, of the Topographical Engineers, an insurable interest, created by the coal trade alone, amounting to $22,000 per annum, estimating the vessels in ballast coming after it, and the value of the vessel and cargo carrying it to the various ports at which it is wanted. Many of these vessels, however, instead of ballast, bring to Philadelphia cargoes of plaster, fish, lumber, salt, &c., the value of which is of course not included in the above estimates; and it is well known that few of these vessels employ a pilot. To such an extent has this coast trade increased, that, while in 1836 there cleared from Philadelphia 3,225 vessels, carrying 344,812 tons, the number of clearances in 1846 was 8,953, carrying 1,065,228 tons. Along the southern part of our country the coast is of course still less accurately known, since it does not lie in the track of the extended trade passing over the

points which we have alluded to above. These few facts will be sufficient to show the pressing necessity which exists that a coast so little known and of so dangerous a character, from its exposure and the number of its shoals, should be, as soon as possible, accurately and thoroughly explored.

In order to accomplish a work of such extent with the requisite precision, it is necessary to make available to its purposes all the refinements which mathematics and physical science have added to the art of measurement. The original base lines, which form the starting points of the survey, require to be measured by apparatus of the most delicate nature, since any error committed in this early part of the work will necessarily be multiplied throughout the series of triangulations which rest upon them. The bases of verification require to be measured with the same degree of accuracy, as otherwise they could not serve as a check upon the calculated results. Nor is less precision necessary in the measurement of the angles of the primary and secondary triangulations, which serve as checks upon each other, since the position of any point in the former is determined by each of those series. And again, at every important point the astronomical observations for latitude and longitude again contest the results of the geodetic operations. In this way, although absolute accuracy can never be expected from human work, and especially from that which requires so many observations and calculations for its elaboration, yet the possible error is reduced to so small a quantity that it may be for all purposes of commerce and internal improvement neglected. But to obtain these results the whole resources of science are requisite; and it is necessary that he to whom such a survey is entrusted should have a thorough familiarity with what has heretofore been done in this regard by other nations, and should possess besides that degree of talent and profound science which will enable him to judge of the results of the eminent men who have preceded him, to select what is worthy of imitation in their processes, and improve on that which is defective.

When, however, a survey of this kind is conducted with the requisite degree of precision, its results become incalculably useful, not only in a pecuniary point of view to the government and citizens, but to the advancement of science, and through it of civilization and the general welfare of mankind; and there are in many branches of science problems, not yet definitively solved, to the correct elucidation of which the observations of the Coast Survey will become available. Hence the cause of science, not less than that of self-interest and humanity, is involved in the proper conduct of such a survey; and by its promotion, while we improve our commerce and relieve our seamen from a portion of the dangers to which they are exposed, we shall raise our national character and justify our position among the great nations of the earth.

If now we attempt to compare our Coast Survey with similar works executed abroad, we shall find just cause of pride in the manner in which it has been conducted.

The regulation introduced by the present Superintendent, by which the field work at first computed by the party making it is afterwards subjected to a second calculation by others not connected with them, is such as to prevent the introduction of accidental errors, and to remove altogether the possibility of tampering with the observations. It therefore allows implicit confidence to be placed in the work.

The measurement of the more recently selected bases has been made by a new apparatus, contrived by the Superintendent for the purpose, (the description of which will be found in his report for 1847, and in the Proceedings of this Society, vol. IV, p. 368,) in which the arrangements for the support of the bars, compensation for temperature, accuracy of contact, and delicacy of

adjustment, are such as in the opinion of the committee to leave nothing to be desired; while the apparatus is so simple, and so easily manipulated, as to allow of a rapidity of work which, it is believed, has never before been obtained. The measurements by this instrument are of course verified by the most severe and improved methods, and the agreements of the various measurements, some of which were made under circumstances peculiarly unfavorable, shows a degree of accuracy which has certainly never been surpassed.

The application of the electro-magnetic telegraph to the determination of difference of longitude, and the invention of a clock by which the time is accurately registered without the intervention of any assistant, at stations at any distance apart, allows the correct difference of time between two places to be determined within a very small fraction of a second, and will give the means of getting the differences of longitude between the principal cities with a degree of accuracy which had only been obtained at the principal observatories of Europe after many years of continued observations and comparison.

Improvements upon the astronomical apparatus used, and careful experimental observations upon the relative efficiency of different forms of instruments and different modes of observing, have led to great accuracy in the observations for the determination of latitudes, so that the places of the smaller stars, as given in the catalogues, cannot now be sufficiently precise for the work, and the positions of the stars used have to be determined by direct observations. The arrangements for having the maps, after reduction, engraved in the office of the survey, under the immediate inspection of an assistant, and then, after two separate verifications, submitted to the Superintendent before publication, is calculated to maintain the accuracy of the field work upon the maps issued, as far as that is possible.

The charts issued from the office bear the marks of the great care which has been bestowed upon them, and as specimens of topographic art are not exceeded by any which the committee have seen.

The same attention to insure accuracy is especially visible through the whole plan of organization and the details of the work. The committee cannot but repeat that, in their opinion, our Coast Survey will in this respect bear comparison with the best geodetic measurements of Europe.

As to the efficiency and rapidity of progress of the work, it is not possible to make a minute comparison, since in no other work of the kind is there any annual report from which its progress may be judged of, nor indeed was there in the Coast Survey until this feature was introduced by the present Superintendent. Nor can any statement of the number of square miles accomplished in any year give a fair standard of comparison between two surveys in different countries. The nature of the ground, the climate, and many other causes, operate too strongly to retard or facilitate works of this kind; so that any parallel founded upon them cannot but be fallacious. The ordnance survey of Great Britain, commenced in 1791, has been continued from that time, and is, we believe, not yet finished. Our own survey was actually commenced by the late Mr. Hassler in 1817; discontinued from that time until 1832, when it was recommenced; and has been prosecuted continuously to the present time. The triangulations now extend in a connected series from Maine to Virginia; and have been commenced in North and South Carolina, Alabama, Mississippi, Louisiana, and Texas. Since the work has been in charge of the present Superintendent, (that is, since 1844,) an area of 19,309 square miles has been triangulated; the topographical surveys with the plane table have covered 2,755 square miles, and embraced an extent of shore line of 4,055 miles. The hydrography has covered an area of 15,086 square miles; of which 11,000 were principally off-shore or deep-sea work. 21 sheets of maps and charts have been published.

The plan adopted by the present Superintendent, by which the survey has been simultaneously started at different points of the coast, presents striking advantages in more than one point of view. It extends the benefits of the survey more speedily to all parts of the country, reduces the time necessary for the completion of the work, and, as the Superintendent has shown in his reports, diminishes the total expenditure necessary for it. The minute division of labor, and the specific instructions from the Superintendent to the various parties as to their duties, are well calculated to promote activity and increase the efficiency of the work—an end which will also be greatly assisted by the honorable and friendly rivalry which evidently exists between the civilians and the officers of the army and navy engaged on the work. In fact, so much and such excellent work could not have been accomplished within so short a time, except by extraordinary energy on the part of the Superintendent, seconded by the cordial and zealous co-operation of all those under his charge; and the annual reports of the Survey indicate an amount of scientific talent and knowledge, as well as energy and enterprise among the numerous assistants, which is highly honorable to our country.

The expense of conducting such a survey as this must necessarily be great, though by no means so in reference to the advantages obtained from it. From the year 1844 to 1848, (the period during which it has been in charge of the present Superintendent,) the appropriations to the survey have amounted in the aggregate to $622,000; and if we add to this the estimate for 1849, we shall have a gross amount of $818,000 as the cost of the survey for six years. It is true that the expenditure has been every year increasing, but it is equally so that such increase has expedited the operations of the survey in a still higher ratio, and has thus actually diminished its final cost. Thus, while in 1844 the cost of fifteen parties (with less field work in all the departments) was $100,000, in 1848 thirty effective parties have been kept in action for $130,000; that is, an additional expense of 30 per cent. has doubled the efficiency of the survey. In fact, so economical has been its management that, notwithstanding the far more elaborate work and the much greater precision, the expense of the survey is shown scarcely to exceed that of the survey of the public lands executed for the Government. For the reasons before stated, and for others which will easily suggest themselves, it can scarcely be deemed fair to attempt a comparison of the topographical map of Great Britain, yet such a comparison may perhaps serve to defend the U. States well from a charge of extravagance. The cost of the ordnance survey of Great Britain, from 1812 to 1848, is stated by a writer in the London, Edinburgh, and Dublin Philosophical Magazine, (April, 1848,) at £1,500,000, or about $7,500,000. A survey of the city of Dublin for municipal purposes was stated in Parliament to have cost £200,000, or $1,000,000; and it was at the same time stated that the surveys of the city of London, under the Parochial Assessment act, had already cost £300,000, or $1,500,000, yet a new survey of this latter city is now in progress. With these data before us, and an attentive study of the estimates of the Superintendent, it is scarcely possible to doubt that the Coast Survey has been carried on with all possible economy consistent with its efficient prosecution.

If it be asked what results of a scientific or practical character has accrued, or are likely to accrue, from this vast work, a hasty glance at its progress will furnish an adequate answer.

Accurate charts have already been published of the Bay of New York, and the Delaware Bay, and approaches to the city of Philadelphia, and of six other harbors; and of the former one map upon a large scale, occupying six sheets, and another in one sheet, has been issued. Of some of these harbors no maps

of a trustworthy character were before in existence; and in all of them important corrections have been made, new channels indicated, unknown shoals pointed out, and the increase or decrease of the old ones marked, the soundings and nature of the bottom carefully noted, and every information given which can be of service to vessels desirous of entering.

The plan adopted by the present Superintendent for publishing the results of the survey as fast as the maps can be prepared, cannot be too highly approved. There can be no reason why, after the work on a certain part of the coast has been finished and verified, those who are benefited by its results should be kept waiting until the whole of so vast a work as this can be completed. Why the main trade of our principal cities with Europe should continue subject to the annual risk arising from insufficient maps until the whole of the shores of the Gulf of Mexico have been surveyed.

The value of the publication of these maps has been materially enhanced, too, by the liberal policy of the Government in allowing them to be sold at such a low price as to put them within the reach of all who may require them. By this judicious course their introduction, in place of the insufficient and often treacherous guides which they are to replace, will be much more rapid, and they themselves being more widely disseminated, will be far more useful.

Another practical benefit of incalculable importance, which we already owe to the efficient prosecution of the Coast Survey, is the discovery of dangerous and sunken rocks and shoals before unknown, yet lying directly in the path of our principal trade. In addition to the discovery of a new channel into New York Bay, having two feet more water than the old channel; of two new and important channels into Delaware Bay, one of which is open when the old channels are choked up with ice, and is thus invaluable in the winter season to our coasting trade; and of another on the coast of the State of Mississippi, the Coast Survey has already detected and published nine dangerous shoals in the vicinity of Nantucket, and numerous rocks in Long Island sound and its vicinity. If these were the only practical benefits to be derived from it, they would more than repay all its expenditures. Obstructions of a similar character have been discovered in the Delaware and Chesapeake bays, and doubtless many more will reward its labors upon the coast further southward.

The information derived from the Coast Survey has been made useful in the determination of the proper sites for light-houses along our coast, and in assisting the local surveys which the authorities of the various seaboard towns desire to have made; and when, in the progress of civilization, the citizens of our different States shall feel the importance of following the excellent example set them by Massachusetts, and of substituting true topographical maps of their territories for the fancy sketches which now bear that name, the results of the Coast Survey will be found of great utility to them in establishing their bases and verifying their work.

But, after all, the great practical utility of the work will be found in the publication of cheap and trustworthy maps, which, while they furnish valuable information to all, will be instrumental in diminishing that fearful loss of lives and property which annually takes place along our extensive and exposed coast.

When we turn to inquire what benefits to science have arisen, or are likely to arise, from the Coast Survey under its present organization, their number and importance almost preclude an elaborate reply.

The first and most prominent point of scientific interest upon which its results will be brought to bear, will of course be the determination of the length of a degree of latitude on different parallels, and from this of the figure of the earth. A problem considered of such importance that surveys, more costly

than that of our coast is likely to be, have more than once been undertaken by European nations for the sole purpose of obtaining its solution. And France, with that honorable zeal which has placed her first in all matters of physical science, has sent parties of her ablest men to the most remote regions of the earth to execute these measurements. As our survey when completed will extend over about 20° of latitude, the opportunity of controlling the results of former determinations will be most excellent, and most advantageous to science.

The vast number of astronomical observations of different kinds, for the determination of latitude and longitude, extending from Galveston to the northernmost point of the coast of Maine, the experimental observations for the determination of the relative value of different instruments and different methods of observing for the nice determination of celestial phenomena, and the elaborate discussions of the formulæ for reduction and correction of errors, by the able astronomers whom the Superintendent has engaged in those labors, must be of inappreciable importance to practical astronomy, for which we as a nation are already obtaining a high character.

The application of the electric telegraph to the determination of longitude, and the invention of the self-registering clock, are improvements the vast importance of which cannot be overlooked.

The development of the laws which govern the distribution of sediments at the bottom of the sea and along the coast, the microscopic examination of the various infusoriæ which live in them, and the establishment of safe data from which any future elevation or depression of the land, however gradual in its progress, may be detected, will be found as important to the geologist as the results which we have just alluded to are to the astronomer; while the extensive and delicate magnetic observations, the study of the tides and oceanic currents, cannot fail to furnish a vast body of the most carefully determined facts, capable of giving to the physical science of our country an impetus which it has never yet received; while the training of our officers of the army and navy to scientific observations, and, what is far more important, the education of a body of young men in the strictest school of modern experimental science, may be ranked among the most important advantages either in a practical or scientific point of view.

It is not to be expected that, confined to the examination of the results of the work as published, and without access to the official records, the committee could make any suggestions likely to lead to any practical improvement in the conduct of the work; it is evident from the results that the superintendence of Prof. Bache is very active in this respect, and the members of the society have been long enough associated with him to know that nothing in the way of improvement is likely to escape his notice or to meet his neglect. Your committee however would respectfully call his attention to the fact, that, if consistent with his duties and means, the early publication of the original observations, astronomical, magnetic, hydrographical, and others, would be of vast service to the practical science of the country, and is anxiously looked for by its cultivators.

In performance of their duty, the committee have been compelled to confine themselves to an indication merely of the most important conclusions to which their examinations have led them. To enlarge upon the points suggested can scarcely be necessary in a report to a scientific society, and would have occupied more time than their other pursuits would allow, or the society would have at its disposal. But enough, they think, has been said to warrant them in relying upon the approbation of the society in their conclusions.

That the survey of the coast is a work, which from its importance to our citizens, recommends itself in the strongest manner to the protection of the Government.

That the benefits of a scientific and practical character, which have yalread been derived, and are constantly resulting from it, are such as to repay abundantly the labor and expense which has been and may be hereafter devoted to it.

That it has heretofore been conducted accurately, efficiently, and economically, and that there is every reason to believe that it will best thrive by being left with its present organization.

And that, as well from the magnitude of the undertaking as from the skil and energy with which it has been conducted, it will prove honorable to thos who first conceived it, and to those who have been engaged in its prosecution.

The American Philosophical Society therefore recommends to the Superintendent of the U. S. Coast Survey the publication, as speedily as shall be consistent with the interests of the survey, of the observations upon which the published results are founded, and of all others made during its progress, as well as the formulæ for computation and reduction, and the discussion of the correction of errors from the observed results.

And the committee respectfully ask to be discharged.

R. M. PATTERSON,
JOHN F. FRAZER,
E. OTIS KENDALL,
J. K. KANE.

Survey of the Coast of the United States.

The Committee on Science and the Arts, constituted by the Franklin Institute of the State of Pennsylvania for the Promotion of the Mechanic Arts, to whom was referred for examination and report the subject of "The Progress of the Survey of the Coast of the United States," report—

That the Survey of the Coast of the United States is one of those great national duties which our Government owes to its own citizens and to the world at large. In the present advanced condition of civilization and enlarged commerce, it would be a matter of great surprise should we find so important a duty overlooked entirely, or prosecuted with such unwillingness as to cause it to fail in its practical benefits to society.

The duty of a Government constituted like our own, whose care of the commerce of the country is exclusive of all interference from the States, and extends over a greater sea, bay, and river border than that of any other in the world, is, perhaps, more imperative upon this point, than that of the governments of countries of more limited space in these particulars.

The importance of such knowledge as an accurate measurement and delineation of the coast would give was early felt by the people and authorities of the Union, and the plan for such a survey, to be prosecuted with the best lights that physical science then afforded, was adopted by President Jefferson in the year 1807, and the appointment of the late Mr. Hassler to the office of Superintendent was made by him.

Owing to the difficulties in which the country became involved about that time, from the disturbed condition of Europe, and to the subsequent war which took place between the United States and Great Britain, Mr. Hassler was unable to procure the necessary instruments for the work, or to undertake its prosecution until the year 1817. Shortly afterwards the law under which he had been appointed was modified, so as to exclude civilians from official positions on the survey; and it was not until the year 1832 that Mr. Hassler, under a re-appointment, commenced his labors in actual service.

From that time until his death, which occurred in the year 1843, he was engaged in prosecuting the work in the northern part of the United States, and

his measurements embraced portions of the States of Delaware, Pennsylvania, New Jersey, New York, Connecticut, Rhode-Island, and Massachusetts.

Although the actual labors in the field were great, and much valuable information was collected, it was not deemed expedient by the late Superintendent to publish the preliminary results, to any great extent, in the form of maps and charts.

In 1844, Prof. Alexander Dallas Bache was appointed to the office of Superintendent, made vacant by the decease of Mr. Hassler, and he immediately addressed himself, first, to the proper measures for closing up and verifying the work of his predecessor; and, second, to the publication of the ascertained results in a practical form.

The credit, therefore, due to his predecessor having been fairly and fully awarded, Prof. Bache could safely complete the triangulations of those portions of the coast, and commence the publication of the maps and preliminary sketches—thus rendering the work immediately available. While this has been the case with the work as it stood in 1844, new base lines have been measured to the north and south of Mr. Hassler's work, and the survey is now progressing in eighteen States on the eastern coast, and a party organized for the preliminary examination of the western coast. When the committee states that these labors cover the whole of the coast line of the Atlantic and Gulf of Mexico, with their tributaries, and are intended to extend over the whole of our coast line on the Pacific ocean, with its immense but little known tributaries, some idea may be formed of the scope and value of such a survey. It first addresses us in its practical character as a commercial nation—the second in the world, whose foreign commerce in imports and exports amounts to about $300,000,000 annually, and whose domestic or coasting trade is probably equal to as many millions yearly. In the year terminating June 30, 1847, 14,229 vessels, of an aggregate tonnage of 3,321,705 tons, arrived in the ports of the United States, and 14,370 vessels, of an aggregate tonnage of 3,378,998 tons, cleared from the same. The tonnage employed in the coasting trade was 2,839,045 tons, and some of these coasters make ten or twelve trips per annum. The number of emigrant passengers that arrived from foreign countries was nearly 240,000, and the officers and mariners engaged in our maritime commerce amount probably to 100,000 souls.

We can scarcely conceive of the perils to which such a mass of property and life is subject in approaching our extensive and dangerous coast; and, although light-houses and buoys have been erected to mark its most hazardous places, there are others, hidden beneath the waters that wash our shores, perhaps equally perilous, which can only be ascertained, and become generally known, by accurate soundings and charts.

Independently of the ordinary results of the operations of the Coast Survey, as given in the annual reports and preliminary sketches and maps, two great natural approaches, before unknown, have been discovered, and verified in such form as to mark them distinctly for use by the mariner; we refer here to Gedney's channel in the harbor of New York, and to Blake's channel in Delaware bay.

Of equal merit, but not yet so distinctly made available for practical purposes, are the newly discovered shoals off Nantucket, the examinations of Chesapeake and Mobile bays, and some of the dangerous parts of the coast of North Carolina.

The investigations of the width and direction of the current of the Gulf stream, that great physical wonder, its temperature and depth, will no doubt be of as great practical, as it is of scientific, interest. The phenomena of the tides, and of the currents of the oceans and rivers which wash and water our

territories, the nature and changes of the bottom, both in the shallow and deep places, are highly curious and practical.

Nor ought we to overlook, in such a summary, the accurate delineation of the topography of the country bordering the shores. On every side, and everywhere, the survey applies the scale of truth and science to the crude and imperfect locations and measurements of former times, and presents us with perfect, or nearly perfect, work.

Entrances to harbors and bays have been found to vary from the received proportions by miles—light-houses and dangerous points in the navigation have had their locations corrected, and the confiding mariner made safe in his approaches.

It is only necessary for any one who doubts these great results to procure the most approved of the old charts and maps, and compare them with the work of the Coast Survey. The members of the Institute may readily do this, by an examination of the new chart of Delaware river and bay; they will rise satisfied, from such an examination, that every attention has been given to secure accurate results; and it will be apparent to them how valuable similar works must be to their fellow-citizens in other parts of the Union. But it is unnecessary for us to confine ourselves to the commerce of the nation in an enumeration of the practical benefits of the Coast Survey. The work that has been wrought out with so much care and accuracy, to fix prominent points along the coast, may be equally relied on by the State and municipal authorities, for local or more extended measurements, by the triangulation of the areas of cities, counties, and States.

As land becomes valuable, and the conflicts for its possession increase in number, the importance of authenticated measurements, made independently of any such considerations, will be more and more obvious; and it will doubtless soon become the policy of each State, if not of the subordinate parts of it, to compare the boundary lines of public and private locations, as they now imperfectly or arbitrarily exist, with great triangulations of the national work; and correct them with, and mark their relation to, these measurements, by the application of the same methods that are now used in them. By such a system, not only would private litigation on the subject of boundaries be much diminished, but accurate maps would be produced, and take the place of those imperfect and deceitful sketches now in use.

Of the scientific methods used in the labors of the Coast Survey it will be sufficient for us, perhaps, to say, that they embrace all that is now known, either in this country or in Europe; and that, in the establishment of new formulæ, or in the application of old ones, those entrusted with the work maintain a high position.

Our limits will not permit us to institute comparisons between the rapidity and correctness with which our work is going on, and those of similar character that are now making by other nations. The testimony of Col. Everest, who recently visited this country, and who was charged with the superintendence of the great survey of India, emphatically marks it as equal to any with which he is familiar. And we know, by an examination of the history of the published results abroad, that the survey of the coast of the United States is more rapidly prosecuted than any other national work, and its results placed in the possession of the public with more promptness.

In point of economy, although from its nature large amounts of money must be annually expended, it can scarcely be said to exceed the price of our ordinary surveys of the public lands, while its results are much more to be relied on.

This economy is, in a great measure, due to its peculiar organization; while it embraces army and navy officers of the medium grades, and uses their pecu-

liar professional skill and knowledge, it relies more largely on the employment of civilians, and thus blends into harmonious action those who can best contribute to its great objects. The Superintendent is of course a civilian, and such should be the case from the very nature of his duties. They are varied, comprehensive, and require peculiar habits of thought and action, that are rarely attained in the camp or on board the ship. The chief of the survey cannot, without great hazard, be rendered subject to the contigencies which affect the the military and naval service, because the great value of his labors depends upon the soundness and extent of first preparations, and the gradual but steady filling in of the details marked out by previous study. The computations, drawings, observations, and measurements, the engravings and other artistical work connected with the subject, must, to a great extent, be the work of civilians; and while the head should be able to command the respect and confidence of military and naval officers of the country, he ought also to be possessed of that practical knowledge of scientific and mechanical pursuits, that will enable him personally to direct and control the minutest details. In these respects we consider the work most happily organized, and tending to the best results. The arrangements by which the services of the different individuals employed are adjusted, the proper distribution of labor among them, and the subdivisions of the corps into effective working bodies, are all well adapted to secure harmony and efficiency. The success of these arrangements is well shewn in the published results, and if the finished maps be considered merely in the light of mechanical productions, they will reflect high credit on the artists; but when they are examined with reference to their scientific and practical value, the skill and talent bestowed upon them challenge the most delicate criticism.

The committee has been struck with the perfection of the organization of the business of the survey.

It has been arranged so as to meet the complicated responsibilities of a large number of individuals of different capacities, and laboring in different fields, but whose results must be combined in order to perfect the whole work. Each of these different individuals is, in some sense, a check upon the whole, and he either contributes to the correct result, or is himself convicted of error.

In this respect, the survey is a great national scientific school, in which the young men from all parts of our extended country may actively participate in its labors in the field, or, by means of its connexion with our colleges and other schools, become familiar with its methods of examination and computation, and compare them with those which claim the attention of the educational institutions and scientific men of Europe.

We have already glanced at its economy, and, in connexion with what we are now considering, we would say that, independently of the vast practical benefits which are flowing from the work, a nation like our own might well afford to contribute its quota to the sum of human inquiry, by keeping a portion of its citizens, equal in number to those now employed in the survey, engaged in the investigation of the several branches of physical science that fall regularly within its duties. In these relations it connects us with the movements of general science throughout the civilized world, and will enable the men of science of our own land to vie with the philosophers of other nations in the value and extent of their investigations. Spread, as these investigations are, over many States, local prejudices retire before the lights which they furnish, and every new field that they reach will, in its turn, yield fruit to the general harvest.

If we direct our attention to the scientific character of the Coast Survey, we find that it is making large contributions to knowledge and the arts. It calls to its aid all the physical sciences, and applies them for the determina-

tion of valuable practical results. Thus, the higher mathematics used in the reductions of the astronomical, magnetic, and geodetic observations, give formulæ which may be applied to objects entirely distinct from the immediate work.

The explorations of the depths and bottoms of our sea-coast, bays, and rivers, afford a large field for the more minute investigations of the botanist, the geologist, and the observers of all kinds who delight in the examination of animal life in its various extended forms. The topography makes us familiar with the character of the surface, and the nature and extent of the cultivation of the soil.

The magnetic and meteorological observations will become valuable in their applications to the study of climate and general temperatures. The observations for latitude and longitude will designate with certainty the true positions of our cities, and other places of interest in a national point of view; and give greater precision to our knowlege of the sphericity of the earth, and of the relations of the meridional and equatorial arcs which are within the extended bounds of the survey.

It has given rise to improved methods of observing angles and azimuths, and has furnished valuable formulæ and tables for determining latitudes and longitudes, by reference to its great bases. It has brought the aid of the magnetic telegraph, and magnetic and electric clocks, to practical use in the determination of the longitude of our cities and important inland points. New and improved apparatus has been constructed for ascertaining temperatures; for constructing and dividing the delicate instruments used in the terrestrial and astronomical measurements; for determining the meteorological and magnetic states of the atmosphere; for discovering the true character of the soundings; and for measuring the direction and velocities of tidal and oceanic currents. The astronomical observations will embody a vast amount of information on the subject of celestial phenomena, and by their number and extent tend greatly to the verification of those results that have been obtained by the terrestrial measurements. It is difficult, indeed, to determine where its value, in a strictly scientific sense, would terminate; because it explores every walk of known science, and is daily returning new discoveries for the aid which the elder ones had furnished to it.

After a careful consideration of the whole subject embraced in the examination of the Coast Survey, the committee would express the following conclusions:

First. That the work is national in its character, and ought to be continued by the Federal Government upon a scale commensurate with its practical importance, and with the extent and variety of the objects which are benefitted by its results.

Second. That the manner in which it is at present organized is economical, efficient, and scientific; giving its results with sufficient rapidity, at moderate cost, and upon correct scientific and practical principles.

Third. That its labors ought to be (as they now are) divided among the civil, military, and naval talent of the country, in order to secure to each of these departments that knowledge of its processes and determinations which are equally required by them all.

Fourth. That the benefits which the nation has already obtained from it have fully justified its cost, and that those benefits ought now to be continued to the whole of the States of the Union, upon as broad and liberal a scale as the Government has hitherto applied.

By order of the Committee:

WILLIAM HAMILTON, *Actuary.*

Philadelphia, February 8th, 1849.

RESOLUTIONS *by the* BOARD OF TRADE *of* PHILADELPHIA *relative to the Coast Survey.*

At a stated meeting of the Directors of the Philadelphia Board of Trade, held on Monday, the 19th of February, 1849, the following resolutions were unanimously adopted:

Resolved, That the survey of the coast of the United States is a great National work, and that it ought to be prosecuted upon broad and liberal principles, so as to secure the most rapid publication of its results, and extend its examinations over the greatest surface.

Resolved, That as at present organized it is progressing rapidly, economically, and making valuable publications, for the use of the mariner, merchant, and underwriter.

Resolved, That its present organization is that which is calculated to produce the best results, and to lead to that harmony and efficiency which are essential to success in so complicated a service.

Resolved, That we should view the abandonment of the Coast Survey, or any limitation upon its present extent and plan, as a public injury, and would deplore it, as a failure in those National obligations which our country owes to the civilized world.

Resolved, That the above resolutions be published, and copies transmitted to our Representatives at Washington.

BALTIMORE, *January*, 1849.

We, the undersigned underwriters, merchants, owners, and masters of vessels, citizens of Baltimore, having had our attention directed to the operations of the Coast Survey of the United States, as conducted by Prof. Bache, hereby desire to express our approbation of the work, and our opinion that it is to the interest of the public generally that it should be continued.

We believe that the various discoveries of new channels, new shoals, and other important data upon which correct sailing directions are founded, give ample evidence of the zeal and industry of those engaged in the work, and will, no doubt, prove of great importance in the safe navigation of our coast and harbors.

A. J. SCHWARTZE,
Prest. of the Amer. Mutual Ins. Co. of Balt.
SAM. T. THOMPSON,
Prest. of the Atlantic Mutual Ins. Co. of Balt.
WM. GRAHAM,
Prest. Merchants' Mutual Ins. Co. of Balt.
EDWD. DIDIER,
Prest. of the Mutual Marine Ins. Co.
ALEX. BROWN & SONS, and others,

MEMORIAL *of the Faculty of* ST. JOHN'S COLLEGE, MARYLAND, *in relation to the U. S. Coast Survey.*

ST. JOHN'S COLLEGE, *Annapolis, Jan. 12th*, 1849.

To the Hon. Senators of the United States:

The President and Professors of St. John's College having heard that dissatisfaction exists in the minds of some as to the present condition and progress of the Coast Survey, beg leave to express to your honorable body our perfect confidence in the wisdom and skill of the Superintendent of that work, and in the fidelity and success of the gentlemen employed under his direction. We have been greatly pleased with the rapid advancement of this noble and national undertaking under the management of Prof. Bache; and we have derived the highest gratification from the accuracy and beauty of the maps and charts which have proceeded from that office since it was placed in his keeping. This feeling of patriotic pride we should deeply regret to have marred or diminished by any change that may be contemplated in the method or direction of these

most responsible operations, which are doing so much to raise our country in the estimation of foreign nations, and contributing so materially to the safety and extension of commerce and national wealth throughout the world. We believe it would be madness to arrest these delicate investigations in the hands of men who are in every way fully competent to pursue them, or to embarrass them by any temporary discussions which must call off the attention of the officers in charge from their arduous duties. And we hope and pray that this work may be suffered to go on to its completion without any retardation—such as must necessarily arise from dragging it into the field of public debate. We think that the world has never before seen so wide a field opened at once for scientific explorations in astronomy and geodesy, as is now presented in our conquests and acquisitions at the West, especially on the shores of the Pacific seas. To interfere with the progress of this grand series of operations at such a moment, when so vast a future is suddenly unfolded to the irrepressible energies of our countrymen, could not fail to be highly injurious to our best national interests, and to diminish the glory that we have already won in adding those territories to the stewardship of the American people. We therefore pray your honorable body not to entertain any proposition that is unfriendly to the uninterrupted prosecution of its present most able managers.

We have the honor to be, with the highest respect, your most ob't sev'ts,

HECTOR HUMPHREYS,
President and Prof. of Moral Science.
EDWARD SPARKS,
Prof. of Ancient Languages.
DAVID J. CAPRON,
Prof. of Math. and Civil Engineering.
CHARLES EDWD. ANTHON,
Prof. of Modern Languages.
WILLIAM H. THOMPSON,
Prof. of Grammar.

LETTER *from the Professors of the* UNIVERSITY OF VIRGINIA *relative to the U. S. Coast Survey.*

UNIVERSITY OF VIRGINIA, *January*, 1849.

GENTLEMEN: We learn with surprise and regret that a resolution has been submitted to the United States Senate proposing to repeal the act authorizing the employment of civilians in the survey of the coast of the United States.

The immediate effect of such a proposition, if adopted by Congress, would be to dispense with the services of the present distinguished Superintendent of the survey, and to discharge more than three fourths of the valuable corps of assistants now employed in the work, many of whom have devoted their time and attention exclusively to it for several years.

In the execution of a survey, such as that now in progress under the authority of the General Government, the requisite accuracy can be secured only by employing the most refined methods of geodesy, and by a familiarity with all the collateral branches of science which exercise a direct influence on these methods. To the Superintendent of such a work should belong not only the purely scientific qualifications required in the subordinate officers, but also that administrative talent so necessary in directing the labors of others, whose duties are to be discharged at points the most remote from each other.

The importance of concentrating upon this truly national work the most eminent talent, and the most varied scientific attainments which the country can afford, would seem to render it inexpedient under any circumstances to limit

unnecessarily the field from which the selection of its officers is to be made. And these general considerations apply, in our judgment, with peculiar force in the present instance, while the survey is under the direction of a gentleman eminently fitted for the discharge of his arduous and responsible duties.

We beg, therefore, respectfully, but earnestly, to express our convictions, that any modifications of the existing law, in relation to the Coast Survey, requiring the appointment of officers from the military and naval services exclusively, would be attended with results prejudicial to the best interests of the public service.

We have the honor to be, very respectfully, your obedient servants,

EDWARD H. COURTENAY,
GESSNER HARRISON,
M. SCHELL DE VERE,
R. E. ROGERS,
JOHN B. MINOR,
H. HOWARD,
J. L. CABELL,
W. H. McGUFFEY.

To Hon. JAMES M. MASON, R. M. T. HUNTER, } *U. S. Senate.*

UNIVERSITY OF VIRGINIA, *January* 31, 1849.

In consequence of my absence from the University, I was unable to unite with my colleagues in their memorial in behalf of the present organization of the Coast Survey. I now beg to express my cordial concurrence in the views and arguments presented in that communication. WM. B. ROGERS.

RESOLUTIONS *of the* CHAMBER OF COMMERCE *of* CHARLESTON *in relation to the Coast Survey.*

Resolved, That the Chamber of Commerce of Charleston have heard with peculiar gratification that the Coast Survey, which has produced benefits of such magnitude to other sections of the Union, has at length been commenced on the coast of South Carolina, and in the harbor of Charleston, under the direction of the present very efficient and scientific head of the Coast Survey, Professor Bache.

Resolved, That this chamber considers this survey as a work of more utility and importance to Charleston, and the extensive country of which it is and will be the outlet, than any work that the General Government has ever undertaken for it; and that we shall watch its progress and early completion with the deepest interest.

Resolved, That the examination of the harbor, and all its approaches; the accurate ascertainment of the currents and channels; the volume, force, and speed of the waters that flow and reflow through them; the exact locality and influence of the natural and artificial barriers, shores, and obstructions, which control or affect them, and which do, or may be so made as to bear upon the channels and outlets to the sea, so as to open or to deepen these highways of commerce to this city, will be of such value as to call upon this chamber to give to the survey every aid and assistance in its power; for which purpose a standing committee of five members be appointed, to be at all times in communication with the officers engaged in such survey, and to extend to them any aid and information they may require within the ability of the chamber to extend.

Resolved, That the surveys which have been made with so much scientific and professional ability under the present able head of the Coast Survey, Professor Bache, is a warrant that, if carried on and completed by him for our

coast, nothing will be omitted to render the work as perfect as it is capable of being made.

Resolved, That the General Government, having already expended one and a half million of dollars in surveying and preparing accurate charts for the great commercial ports of the north and its sea coast, and also for partial surveys and examinations of the coasts of Texas, Louisiana, Mississippi, Florida, and Alabama, that those of Georgia and the Carolinas ought also to be completed; and that to repeal the acts of Congress authorizing this survey, before its benefits have been extended to those who have not yet had them, would not be just.

OFFICE OF THE MOBILE AND OHIO RAILROAD COMPANY,

February 10, 1849.

At the annual meeting of the stockholders of this company there was a large assemblage of citizens and sojourners in our city, who joined most cordially in the resolutions I have the honor to enclose. I am requested to ask you to make such use of them, in Congress or the Departments, as will bring to notice the high approbation by this community of the "Coast Survey," especially as conducted by its present chief, Professor Alexander Dallas Bache. It is to the labors of this gentleman, and the officers under his direction, that we are indebted for the knowledge we have of the Mobile waters; the bay is not merely a capacious bay, but as the depth of the waters, and the seaward movement of the bar are ascertained facts, it is conclusively established to be the best harbor on the Gulf of Mexico. The late arrival and departure of the British royal mail steamer Dee certifies these facts, to which we have added the certificate of the pilot, who took the ship out, that he had over twenty-four feet water on the most shallow points of the bar. *It is a bar no more*; and Congress and commerce will ere long find this port the best for the Government vessels, and for the arrival and departure of the largest class of ships in safety; and while in port the harbor affords the most complete protection against storms from any point of the compass. Another reason for the favorable action of Congress may be found in the opening of our railroad, which brings us to the granary of the world; for, whatever may be the varied views of internal improvements, it is yet deemed legitimate to foster and protect the commerce of our country.

With great respect, your obedient servant,

SIDNEY SMITH, *President*.

To the Hon. WM. R. KING, *of the Senate of the U. S.*
Hon. JOHN GAYLE, *of the House of Reps.*

OFFICE OF THE MOBILE AND OHIO RAILROAD COMPANY,

February 9, 1849.

At a meeting of the stockholders of this company, held in Mobile on Monday the 5th instant, the following resolutions, offered by S. Griffitts Fisher, esq., were unanimously adopted:

Resolved, That this meeting cordially recommend to the favorable notice and action of Congress the continuation of an energetic and active prosecution of the Coast Survey, as a work of the greatest utility to the various interests of the Union, and calculated to reflect honor upon the intelligence and patriotism of this country.

Resolved, That the thanks of this meeting be tendered to Professor Bache, and the officers under his direction, for the zeal and success with which their duties have been performed in the bay and harbor of Mobile.

SURVEY OF THE COAST OF THE UNITED STATES.

FROM THE JOURNAL OF THE FRANKLIN INSTITUTE.

The Committee on Science and the Arts, constituted by the Franklin Institute of the State of Pennsylvania, for the Promotion of the Mechanic Arts, to whom was referred for examination and report the subject of "The Progress of the Survey of the Coast of the United States,"

REPORT:—

That the Survey of the Coast of the United States is one of those great national duties which our government owes to its own citizens and to the world at large. In the present advanced condition of civilization and enlarged commerce, it would be a matter of great surprise should we find so important a duty overlooked entirely, or prosecuted with such unwillingness as to cause it to fail in its practical benefits to society.

The duty of a government constituted like our own, whose care of the commerce of the country is exclusive of all interference from the States, and extends over a greater sea, bay, and river border than that of any other in the world, is, perhaps, more imperative upon this point than that of the governments of countries of more limited space in these particulars.

The importance of such knowledge as an accurate measurement and delineation of the coast would give, was early felt by the people and authorities of the Union, and the plan for such a survey, to be prosecuted with the best lights that physical science then afforded, was adopted by President Jefferson in the year 1807, and the appointment of the late Mr. Hassler to the office of Superintendent, was made by him.

Owing to the difficulties in which the country became involved about that time, from the disturbed condition of Europe, and to the subsequent war which took place between the United States and Great Britain, Mr. Hassler was unable to procure the necessary instruments for the work, or to undertake its prosecution, until the year 1817. Shortly afterwards the law under which he had been appointed was modified, so as to exclude civilians from official positions on the Survey; and it was not until the year 1832 that Mr. Hassler, under a re-appointment, commenced his labors in actual service.

From that time until his death, which occurred in the year 1843, he was engaged in prosecuting the work in the northern part of the United States, and his measurements embraced portions of the States of Delaware, Pennsylvania, New Jersey, New York, Connecticut, Rhode Island, and Massachusetts.

Although the actual labors in the field were great, and much valuable information was collected, it was not deemed expedient by the late Superintendent to publish the preliminary results to any great extent, in the form of maps and charts.

In 1844 Prof. Alexander Dallas Bache was appointed to the office of Superintendent, made vacant by the decease of Mr. Hassler, and he immediately addressed himself, first, to the proper measures for closing up and verifying the work of his predecessor, and second, to the publication of the ascertained results in a practical form.

The credit, therefore, due to his predecessor, having been fairly and fully awarded, Prof. Bache could safely complete the triangulations of those portions of the coast, and commence the publication of the maps and preliminary sketches; thus rendering the work immediately available. While this has been the case with the work as it stood in 1844, new base lines have been measured to the north and south of Mr. Hassler's work, and the Survey is now progressing in eighteen States on the Eastern Coast, and a party organized for the preliminary examination of the Western Coast.—When the Committee states that these labors cover the whole of the coast line on the Atlantic and Gulf of Mexico, with their tributaries, and are intended to extend over the whole of our coast line on the Pacific Ocean, with its immense but little known tributaries, some idea may be formed of the scope and value of such a survey. It first addresses us in its practical character as a commercial nation—the second in the world, whose foreign commerce in imports and exports amounts to about $300,000,000 annually, and whose domestic or coasting trade is probably equal to as many millions yearly. In the year terminating June 30, 1847, 14,229 vessels, of an aggregate tonnage of 3,321,705 tons, arrived in the ports of the United States, and 14,370 vessels, of an aggregate tonnage of 3,378,993 tons, cleared from the same. The tonnage employed in the coasting trade was 2,839,045 tons, and some of these coasters make ten or twelve trips per annum. The number of emigrant passengers that arrived from foreign countries was nearly 240,000, and the officers and mariners engaged in our maritime commerce amount probably to 100,000 souls.

We can scarcely conceive of the perils to which such a mass of property and life is subject, in approaching our extensive and dangerous coast; and although lighthouses and buoys have been erected, to mark its most hazardous places, there are others, hidden beneath the waters that wash our shores, perhaps equally perilous, which can only be ascertained, and become generally known, by accurate soundings and charts.

Independently of the ordinary results of the operations of the Coast Survey, as given in the annual reports, and preliminary sketches and maps, two great natural approaches, before unknown, have been discovered, and verified in such form as to mark them distinctly for use by the mariner;—we refer here to Gedney's Channel, in the harbor of New York, and to Blake's Channel, in Delaware Bay.

Of equal merit, but not yet so distinctly made available for practical purposes, are the newly discovered shoals off Nantucket, the examinations of Chesapeake and Mobile Bays, and some of the dangerous parts of the coast of North Carolina.

The investigations of the width and direction of the current of the Gulf Stream, that great physical wonder, its temperature and depth, will no doubt be of as great practical, as it is of scientific, interest. The phenomena of the tides, and of the currents of the oceans and rivers which wash

and water our territories; the nature and changes of the bottom, both in the shallow and deep places, are highly curious and practical.

Nor ought we to overlook, in such a summary, the accurate delineation of the topography of the country bordering the shores. On every side, and every where, the Survey applies the scale of truth and science to the crude and imperfect locations and measurements of former times, and presents us with perfect, or nearly perfect, work.

Entrances to harbors and bays have been found to vary from the received proportions by miles; lighthouses and dangerous points in the navigation, have had their locations corrected; and the confiding mariner made safe in his approaches.

It is only necessary for any one who doubts these great results, to procure the most approved of the old charts and maps, and compare them with the work of the Coast Survey. The members of the Institute may readily do this, by an examination of the new chart of Delaware River and Bay; they will rise satisfied, from such an examination, that every attention has been given to secure accurate results; and it will be apparent to them, how valuable similar works must be to their fellow citizens in other parts of the Union. But it is unnecessary for us to confine ourselves to the commerce of the nation, in an enumeration of the practical benefits of the Coast Survey. The work that has been wrought out with so much care and accuracy, to fix prominent points along the coast, may be equally relied on by the State and Municipal authorities, for local or more extended measurements, by the triangulation of the areas of cities, counties, and States.

As land becomes valuable, and the conflicts for its possession increase in number, the importance of authenticated measurements, made independently of any such considerations, will be more and more obvious; and it will doubtless soon become the policy of each State, if not of the subordinate parts of it, to compare the boundary lines of public and private locations, as they now imperfectly or arbitrarily exist, with the great triangulations of the national work; and correct them with, and mark their relation to, these measurements, by the application of the same methods that are now used in them. By such a system, not only would private litigation on the subject of boundaries be much diminished, but accurate maps would be produced, and take the place of those imperfect and deceitful sketches now in use.

Of the scientific methods used in the labors of the Coast Survey, it will be sufficient for us, perhaps, to say, that they embrace all that is now known, either in this country or in Europe, and that, in the establishment of new formulæ, or in the application of old ones, those entrusted with the work maintain a high position.

Our limits will not permit us to institute comparisons between the rapidity and correctness with which our work is going on, and those of similar character that are now making by other nations. The testimony of Col. Everest, who recently visited this country, and who was charged with the superintendence of the great survey of India, emphatically marks it as equal to any with which he is familiar. And we know, by an examination of the history of the published results abroad, that the Survey of the Coast of the United States is more rapidly prosecuted than any other na-

tional work, and its results placed in the possession of the public with more promptness.

In point of economy, although from its nature large amounts of money must be annually expended, it can scarcely be said to exceed the price of our ordinary surveys of the public lands, while its results are much more to be relied on.

This economy is, in a great measure, due to its peculiar organization; while it embraces army and navy officers of the medium grades, and uses their peculiar professional skill and knowledge, it relies more largely on the employment of civilians, and thus blends into harmonious action those who can best contribute to its great objects. The Superintendent is of course a civilian, and such should be the case from the very nature of his duties. They are varied, comprehensive, and require peculiar habits of thought and action, that are rarely attained in the camp or on board the ship. The chief of the Survey cannot, without great hazard, be rendered subject to the contingencies which affect the military and naval service, because the great value of his labors depends upon the soundness and extent of first preparations, and the gradual but steady filling in of the details marked out by previous study. The computations, drawings, observations, and measurements; the engravings and other artistical work connected with the subject, must, to a great extent, be the work of civilians; and while the head should be able to command the respect and confidence of the military and naval officers of the country, he ought also to be possessed of that practical knowledge of scientific and mechanical pursuits, that will enable him personally to direct and control the minutest details. In these respects we consider the work most happily organized, and tending to the best results. The arrangements by which the services of the different individuals employed are adjusted, the proper distribution of labor among them, and the subdivisions of the corps into effective working bodies, are all well adapted to secure harmony and efficiency. The success of these arrangements is well shewn in the published results, and if the finished maps be considered merely in the light of mechanical productions, they will reflect high credit on the artists; but when they are examined with reference to their scientific and practical value, the skill and talent bestowed upon them challenge the most delicate criticism.

The Committee has been struck with the perfection of the organization of the business of the Survey.

It has been arranged so as to meet the complicated responsibilities of a large number of individuals of different capacities, and laboring in different fields, but whose results must be combined in order to perfect the whole work. Each of these different individuals is, in some sense, a check upon the whole, and he either contributes to the correct result, or is himself convicted of error.

In this respect, the Survey is a great national scientific school, in which the young men from all parts of our extended country may actively participate in its labors in the field, or, by means of its connexion with our colleges and other schools, become familiar with its methods of examination and computation, and compare them with those which claim the attention of the educational institutions and scientific men of Europe.

We have already glanced at its economy, and in connexion with what

we are now considering, we would say that, independently of the vast practical benefits which are flowing from the work, a nation like our own might well afford to contribute its quota to the sum of human inquiry, by keeping a portion of its citizens, equal in number to those now employed in the Survey, engaged in the investigation of the several branches of physical science that fall regularly within its duties. In these relations it connects us with the movements of general science throughout the civilized world, and will enable the men of science of our own land to vie with the philosophers of other nations, in the value and extent of their investigations. Spread, as these investigations are, over many States, local prejudices retire before the lights which they furnish, and every new field that they reach will, in its turn, yield fruit to the general harvest.

If we direct our attention to the scientific character of the Coast Survey, we find that it is making large contributions to knowledge and the arts. It calls to its aid all the physical sciences, and applies them for the determination of valuable practical results. Thus the higher mathematics used in the reductions of the astronomical, magnetic, and geodetic observations, give formulæ which may be applied to objects entirely distinct from the immediate work.

The explorations of the depths and bottoms of our sea coast, bays, and rivers, afford a large field for the more minute investigations of the botanist, the geologist, and the observers of all kinds who delight in the examination of animal life in its various extended forms. The topography makes us familiar with the character of the surface, and the nature and extent of the cultivation of the soil.

The magnetic and meteorological observations will become valuable in their applications to the study of climate and general temperatures. The observations for latitude and longitude will designate with certainty the true positions of our cities, and other places of interest in a national point of view; and give greater precision to our knowledge of the sphericity of the earth, and of the relations of the meridional and equatorial arcs which are within the extended bounds of the Survey.

It has given rise to improved methods of observing angles and azimuths, and has furnished valuable formulæ and tables for determining latitudes and longitudes, by reference to its great bases. It has brought the aid of the magnetic telegraph, and magnetic and electric clocks, to practical use in the determination of the longitude of our cities and important inland points. New and improved apparatus has been constructed for ascertaining temperatures; for constructing and dividing the delicate instruments used in the terrestrial and astronomical measurements; for determining the meteorological and magnetic states of the atmosphere; for discovering the true character of the soundings; and for measuring the direction and velocities of tidal and oceanic currents. The astronomical observations will embody a vast amount of information on the subject of celestial phenomena, and by their number and extent, tend greatly to the verification of those results that have been obtained by the terrestrial measurements. It is difficult, indeed, to determine where its value, in a strictly scientific sense, would terminate; because it explores every walk of known science, and is daily returning new discoveries for the aid which the elder ones had furnished to it.

After a careful consideration of the whole subject embraced in the examination of the Coast Survey, the Committee would express the following conclusions:

First, That the work is national in its character, and ought to be continued by the Federal Government, upon a scale commensurate with its practical importance, and with the extent and variety of the objects which are benefited by its results.

Second, That the manner in which it is at present organized, is economical, efficient, and scientific; giving its results with sufficient rapidity, at moderate cost, and upon correct scientific and practical principles.

Third, That its labors ought to be (as they now are) divided among the civil, military, and naval, talent of the country, in order to secure to each of these departments that knowledge of its processes and determinations which are equally required by them all.

Fourth, That the benefits which the nation has already obtained from it have fully justified its cost, and that those benefits ought now to be continued to the whole of the States of the Union, upon as broad and liberal a scale as the Government has hitherto applied.

By order of the Committee,

WILLIAM HAMILTON, *Actuary*.

Philadelphia, February 8th, 1849.

Article on U. S. Coast Survey
June 1849

as builders, I have come in contact with, I have received strong wishes to be supplied with such an article.

That the price which lumber of this description would bring in New York would pay the shipper better than what it usually sells for in Liverpool, may be demonstrated by the following calculation:—

The general average price, when the trade to England was considered favorable, was about 22 pence sterling per cubic foot for timber of this description. In 1,000 superficial feet there are 83⅓ cubic feet, which comes to				£7	12	02
CHARGES.						
Eight per cent for loss in measurement	£0	12	02			
Freight, 35*s.* per load of 50 cubic feet	2	18	01			
Commissions on sale and guarantee, 4 per cent	0	06	01			
Insurance on cargo and freight, say 50*s.* sterling *a* 2 p. ct.	0	01	00			
Dock rates, town dues, and incidentals, say	0	02	00			
				3	19	04
Total				£3	12	10
Add one-fifth for difference in exchange and premium				0	14	07
In colonial currency				£4	07	05
At $4 to the colonial £ is					$17	49
If the same article was cut into seasoned lumber suited to the New York market, 1,000 superficial feet would be worth, delivered at a pier in the city of New York					$25	00
Deduct freight, commissions, &c					5	75
					$19	25
Difference in favor of selling in New York in preference to Liverpool					1	76

The credit in Liverpool is four to six months. In New York the freight part of the cargo is cash, remainder three months. The time taken to perform a voyage to Liverpool is short to reckon on an average as 35 days. The time to perform a voyage from any port in the Bay of Fundy to New York is long enough to reckon on an average as ten days. A vessel of the capacity of 600,000 superficial feet, carrying bulk, could as easily make five voyages to New York in a year as she could make three to Liverpool.

No one who has not had the means of examining into the subject can form any idea of the vast consumption of all kinds of lumber in the city of New York. In the course of fifteen years last past, the number of houses, stores, and public buildings alone that has been built in this city would make a larger city than New York itself thirty years before, or as large as Boston in the year 1830. This is without taking Brooklyn, Williamsburgh, Jersey City, or Hoboken into the account at all; the former of which cities is three times the size now that it was in the latter year, and the next is *seven times.* Besides the consumption of lumber in the city of New York and neighborhood for building purposes, the consumption of that material in our external commerce is immense. It is impossible to calculate the extent of pine lumber used for *packing-cases* and yearly sent out of New York city, with the goods they contain; but I am acquainted with one box-maker alone whose yearly consumption is over two millions of feet superficial, and this is but one out of more than one hundred of the same profession, several of which approach to nearly the same extent. All kinds of salted and dried fish are consumed over this entire continent; and the continent of South America and the islands of the Atlantic Ocean within the tropics are supplied in the main by New York, New England, Nova Scotia and Newfoundland.

115

So much for the import trade from the provinces to the United States, which at present is paralyzed by the restrictive duty. I turn now to the trade from the United States to the provinces. All manufactures of leather, agricultural implements, (many of which are peculiar to the United States, and not to be met with elsewhere,) many articles of hardware of superior make, and a better adaptation to colonial wants than English make, can be had by the provinces better and as cheap in the United States as they can import them from the mother country, and want but the withdrawal of the colonial imposts to find an extensive and rapid consumption among two millions of people on our eastern arm that now do not know them, or but know them sparingly.

The same causes that makes New York the place of resort of the western and southern merchant now, will make her the resort of the *eastern* merchant in the British provinces then, when the trade between these provinces and the United States is as free as it is between the States themselves at the present moment; namely, that because New York is the emporium of all the manufactures of the United States, as well as the emporium of foreign commodities besides; merchants at a distance come here to buy because they can buy cheaper, and find assortments better suited to their wants. Thus each alternation in the turn of trade enlarges the sphere of operations of her who is the commercial as well as the Empire City of these United States,—a city whose metropolitan character resembles the sun in his zenith, whose golden rays are always the first to shine upon each new object that comes within the reach of his beams.

Citizens of the United States, Merchants and Statesmen, ye in whose hands are the destinies of the future, think of these things! G. W. P.

Art. III.—THE COAST SURVEY OF THE UNITED STATES.

To Freeman Hunt, Esq., *Editor of the Merchants' Magazine, etc.*

Dear Sir:—I intended, in support of the article on the Survey of the Coast of the United States, which appeared in the February number of your Magazine, to have made before now a brief statement of such information concerning it as should be elicited by the debates on the subject in Congress. The documents produced during the discussion have, however, been but recently published, and contain but imperfect information on the points of most importance. In the meantime a reply to the February article, from Lieut. C. H. Davis, has appeared in the Magazine for April, and though much of the body of this latter paper consists in plain denial without proof, and is therefore not entitled to any notice, I shall glance at such parts of it as deserve most attention; not forgetting, in the meantime, the analysis of documents, which it was my original purpose to make, and which present the only additional facts worth attention.

At page 403 of Lieut. Davis' answer, he says, speaking of the author of the article in the February number, "*If one-half of what he asserts is true, why did he not bring the subject, with the authority of his name and position, under the notice of some member of the executive government, or under that of Congress.*" The writer must be little learned in the intrigues of Washington, not to know that an organized body, like the Survey of the

116

Coast, with an annual patronage of at least a quarter of a million, and officers and *employes* of all kinds, amounting to near a hundred, may be guilty of abuses, which, though apparent to all, can for a long time be practised with impunity before they attract the attention of the public press or of the opposition in Congress, the only two censors to which they can ever be made amenable. The influence of such an establishment is always powerfully felt in the Legislature, while its patronage enables it, to a very considerable extent, to control the press. There needs no other proof of this than reference to what occurred immediately on the appearance of the article on the Coast Survey, published in the February number. Anonymous communications were circulated in every direction, attacking grossly the character of the supposed author of that paper, and their admission into respectable public journals was strongly urged. The course usual in similar cases was adopted here—when you cannot disprove the testimony, you must impeach the witness. The publications thus circulated consisted mostly of flat denials without proofs, expressed in language such as became the subject. Language of this kind even found admission into the speeches of honorable Senators; and though we perceive that they have been either expunged or much modified in the reprints of these speeches, there can be no doubt but that they were really uttered in the course of debate. It should be a source of gratification to the country that some one has been found to prefer charges against the administration of the Coast Survey. The Superintendent has now a fair opportunity of vindicating his conduct and character, but it must be done by document and proof, and not by mere assertion and denial.

Lieut. Davis (pages 403 and 404) exclaims against the writer of the first article "because he has preferred to preserve his incognito." The editor of the *Merchants' Magazine* was desired not to communicate the name of the author to any one not being personally interested in the publication, or who could not satisfy him that any of its statements were unfounded. He had always authority to communicate the name to persons claiming to know it for such reasons, and there was no other legitimate grounds upon which it could be asked. At the time of its publication there existed reasons for a temporary concealment which exist no longer, and the name is at the service of the public. It has been injured, for the first time, by the influence and efforts of the Superintendent of the Survey of the Coast; but it is to be hoped that time, which always brings truth to light, will ere long do justice here.

Lieut. Davis (in the succeeding page) attacks the assertion that "a geodetique operation, such as was commenced under the authority of the law of 1807, was not contemplated or understood by the government." This assertion we deem fully proven by the wording of the law of 1807;—by the debates in Congress concerning the Coast Survey, extending from that time till 1842;—by Mr. Gallatin's letter, which limits the execution of the Survey to "as much correctness as can be obtained within a reasonable time;" —by Mr. Hassler's reply, in which, though the geodetique project is mentioned as the more accurate, still a chronometric survey is intimated as possibly becoming necessary. But, most of all, we deem this proven by Mr. Crawford's letter to Mr. Hassler of April 6, 1818, which complains of the "little progress hitherto made in the work." Strictly speaking, there has not been any mere geodetique operation instituted by any country for more than half a century. Such an operation would be (as the name implies) undertaken for purposes merely scientific, for the determination of the length of a degree of the meridian, or of the value of the ellipticity of the

117

terrestrial spheroid. Of this kind were the first scientific expeditions of La Condamine, Bouguer, Maupertius, Cassini, La Caille, and others. But, in these later days, the most perfect operations have been instituted with views altogether more practical and utilitarian. The surveys in Europe have been carried on, in the maritime States, for purposes either geographic, commercial, or defensive; and in the inland States for the cadastre, or apportionment of taxes. The survey of England was a continuation of the triangulation commenced in 1783 for determining the difference of longitude between the meridians of Greenwich and Paris. It was continued by the Board of Ordnance in 1791, along the southern coast of the kingdom, as affording the basis for a system of defense, and only gradually assumed its later organization and name. The survey of Scotland originated in like manner after the rebellion of 1745, and was at first described as "a magnificent military sketch;" while the survey of Ireland, said to be the most perfect operation of its kind ever performed, was executed for the plain purpose of affording "data for a mode of apportioning more equally the local burdens collected in Ireland." In this survey the compensation base apparatus was first used by Col. Colby. This apparatus was constructed by Troughton and Simms, and these distinguished artists received much and deserved praise for their invention and labor. It is on the same principle as the base apparatus constructed for the Survey of the Coast of the United States, though altogether less perfect in its arrangements; but in the reports of the Superintendent, we look in vain for any allowance of credit to the artists in this country by whom the improvements were devised and executed—their desert and honor is lost in the insatiable and all-appropriating fame of the Superintendent.

But to return to Lieut. Davis. When we asserted that the government did not contemplate a geodetique survey, we had no notion of intimating that such might not have been the aim and meaning both of Mr. Jefferson, Mr. Gallatin, and Mr. Hassler—at least if such a project should be found practicable, in the then state of public opinion and information on such subjects. We have, it is true, a theory of our own on the subject, nor is it improbable or unsupported; namely, that the Survey of the Coast was first thought of as necessary to the proper maneuvering of Mr. Jefferson's gunboats, which then constituted nearly all the navy of the United States. Be this as it may, there can be much variance between the views of two or three distinguished men, connected with a government, and those of the mass, who are their constituents. To illustrate this, I will refer to a case of no very distant occurrence, which may perhaps have fallen under Lieut. Davis' own observation. When the resolution was passed in Congress directing the magnetic observations made at Girard College to be published at the expense of the government, (an editorial function belonging as appropriately to Congress as if they had directed the publication of any other class of papers belonging to that institution, or of any other with which they had no concern,) there cannot be the slightest doubt but that the Superintendent of the Coast Survey, the member who made the motion, and perhaps one or two others, knew what they were about; but that the rest of the Congress, who gave this authority, were at all aware of the true state of the case, was evident from their astonishment when they found they had been sanctioning the publication, at an enormous expense, of two thousand pages of the most difficult kind of matter.

The next assault which Lieut. Davis attempts to make on the February

article is upon what he calls a theory of ours in regard to the wish, on the part of the army and navy, to appropriate to themselves, or to one of them, the direction of the Survey.

The expression of general views to this effect, by distinguished officers of the army and navy from 1817 till Mr. Hassler's death, will be so well remembered by all persons conversant with the affairs of that time as to need no corroboration. As expletive, however, of the feeling on that subject, we may refer to Colonel Roberdeau's paper, read before the Columbian Institute in 1826. Speaking of the British surveys, he says:—"To that nation, and to the skill and science of its naval and military officers, to whom the direction of these explorations and surveys are exclusively entrusted, are the United States and the nations of Europe indebted for a greater part of the charts now in use, as well as for geographical knowledge of the most valuable kind. The employment of officers on this service does not, however, preclude the association of others skilled in sciences connected with it; on the contrary, they are generally employed; but the command and management is confided to the *officers*, and they only are responsible, at the same time that due merit is allowed (Heaven bless the mark!) to each individual concerned in it for their respective investigations and services." This quotation expresses, fully and fairly, the views of the greater part of the army at that time; and it is well known that the passage of the law of 1818 was mainly owing to the intrigues of an officer of the navy, whose name it is not worth while to mention. It is admitted that the distinguished officers named by Lieut. Davis were all intimate and valued friends of Mr. Hassler; but to assume that either they, or the officers of the navy who served under him, were fair representatives of the general feeling of either arm of the service, in regard to the Survey of the Coast, would be as just as to presume that Lieut. Davis is at present the *amour parfait* and true exponent of the feeling of the navy either on that or on any other subject.

Lieut. Davis next lets fall his indignation upon us for speaking irreverently of Professor Henry and the Superintendent of the Coast Survey. The first of these gentlemen is only mentioned in a note as the author of an article or pamphlet, bearing his name and designation, which was certainly republished at Washington and circulated extensively for the avowed purpose of bringing the support of his name and talent to the new administration of the Coast Survey. In like manner the Superintendent of the Survey is spoken of only in reference to his works and writings. No one doubts that he possesses extraordinary abilities, and of a very peculiar and valuable order, to wit, of the administrative and absorbent cast. Any, the most superficial observer at Washington, must have noticed the extensive and all-pervading ramification of influence and espionage which has for the last three or four years supported the personal interests concerned in the Survey of the Coast. This power, under the administration just closed, has not only been felt among the legislative and executive functionaries of the government, but has entered the domain of private life, negotiating family alliances, cementing or dissolving private friendships, and characterized always by the secrecy of its motions, and the certainty of its ends. No clique or faction of equal power, or more perfect organization, has been felt in Washington since the last days of the last Bank of the United States. When the credit of the bank began to fail, and its management to be questioned, it was sustained for a long time by the personal standing of Mr. Biddle and those connected with him. But when it becomes necessary to bring private and personal influences to the

rescue of public institutions, there is always evidence of serious mismanagement somewhere; and in the case of the bank, it and its president fell very nearly together. The case is about the same with the Coast Survey now as with the bank then. It has been held and managed during the whole of the last superintendence for purposes of family influence and personal aggrandizement. We hope it may not be destined to the fate of its predecessor, but that we may "change the bailiff instead of ruining the farm." In regard to Dr. Bache personally, if we allowed him too little credit in our first notice, we trust we have amply supplied the defect in the present. As for his intimacy with Airy, Hamilton, Smythe, Arago, and Humboldt, which Lieut. Davis quotes as evidence of his distinguished abilities, we hope it may be presumed, in the present standing of American science abroad, that the bare position of Superintendent of the Coast Survey would give him an official claim to the consideration of such men even were he *twenty times* more distinguished.

Of Borden's Triangulation, the subject next treated of in the communication of Lieut. Davis, it is admitted that five out of sixteen stations occupied by Dr. Bache are identical with those previously occupied by Borden. This is certainly a pretty fair proportion. But we regret that, in order to prove the necessity of occupying these stations at all, (a point which was questioned in the February article,) it has been found necessary to disparage the Massachusetts Triangulation, and to deny that any comparison was ever made between the perfect operations of the Survey of the Coast and the more modest and humble work of its predecessor. It is said, "Mr. Bache did not compare his results with those of Mr. Borden; the means and instruments of the latter were so far inferior to those of the Coast Survey that such comparison was not desirable."

Now, that Dr. Bache had, through one of his assistants, or by some other medium, obtained possession of all the results of the Borden Triangulation, and that they were compared, and that satisfactorily, with the results of the Coast Survey, is a fact which, if an investigation of these subjects should ever be authorized, can be proven either by documentary evidence, or if not so, then by other testimony equally as conclusive. The fact of the comparison is of too little consequence to merit discussion, and was mentioned by us in our former paper merely to show that, in commencing the Survey, the present Superintendent had chosen the easiest and most healthful region for his own operations, and one in which a pioneer had gone before him, whose work, however unworthy to compare with that of the Superintendent, had at least opened for him his points and saved him the trouble of a reconnaissance. This was mentioned, also, to show that all comparison of the extent of surface covered by the primary triangulation, either in that region or in the States of New Hampshire and Maine, with surfaces of the same triangulation further southward, would produce conclusions entirely erroneous. The points in the two latter States require little or no reconnaissance, and lie, for the most part, open; while southward the preliminary operations require often, nay, almost always, more time than those which are final. The first year after the recommencement of the Survey (1833) Mr. Hassler occupied seven stations, a number which equals the greatest number ever occupied by his successor in any one year. In the succeeding years his progress, which was southward, besides being interrupted by the technical difficulties constantly thrown in his way, was obstructed by the low, impervious nature of the country, and by the time necessarily spent in reconnoiter-

ing and cutting open the lines of the triangulation. This view of the subject is entirely avoided by Lieut. Davis, for reasons sufficiently apparent, and altogether consistent with the present management of the Coast Survey. The assertion that, in taking the northern section of the Survey, the Superintendent merely assumed his proper position at its *head*, is rather whimsical, unless the head of a survey, like the top of a map, should always be northward. We deem that the proper position for the head of any establishment is always where its operations are the most intricate, and require the closest supervision; and if, at the commencement of his operations, the Superintendent had located himself among the keys and reefs of Florida instead of on the more salubrious shores of Rhode Island and Massachusetts, we apprehend that his self-denial and patriotism would have been held in much higher estimation than at present.

We have now noticed the more general of Lieut. Davis' assertions, and shall proceed to those which are more pointed and direct, not forgetting our principal object, the analysis of such documents as the late congressional discussion has furnished.

Lieut. Davis pronounces our statement, "that, at the stations of the main triangulation under the present superintendence, there are usually thirty tents with the corresponding equipage, to be striking but erroneous." It would have been a better contradiction, and have borne some likelihood, had the real number been stated. A series of flat denials of facts follow the remarks in regard to the tents, and constitute the staple of the paper. To preserve the connection and avoid referring either to the February or April numbers of the Magazine, we will extract both the original statement and its contradiction:—

"If the five years' work of the present Superintendent, with a *personnel* at least twice as large as the largest ever employed under the previous Superintendent—an appropriation more than eight times greater than that with which the work began, and nearly twice as large as that with which the former superintendence closed—and with vessels and equipages furnished by the Revenue Bureau of the Treasury Department to the amount of $240,000 be compared with the eleven years' work done by his predecessor, it will be seen, even using the Superintendent's arithmetical process, that there is but little difference in the proportional quantities of work done. I exclude from this all comparison of the area of the primary triangulation. The reoccupation of Borden's Triangulation put the Superintendent at once in the possession of triangles with sides of from eighteen to seventy miles in length, and superficial miles by the thousand were covered with more ease than hundreds in any other portion of the Survey."—*February Number.*

Of this Lieut. Davis says, 1st. "The first two lines are erroneous. A reference to the table hereinafter given will prove this. In every case, except the topography, which has been judiciously curtailed by diminishing the distance inland to which the work is carried, and increasing the accuracy of the portions surveyed, more work has been done in five years than in the preceding twelve. The number of assistants has *not* been doubled. The appropriation has *not* been for the five years nearly double that with which the previous superintendence closed. No equipages have been transferred from the Revenue Bureau, and no vessel of that department was used until 1847. The writer excludes from his calculation the most important part of Mr. Bache's work—the most important in extent and valuable in results. In this part of the work it is strictly accurate to say, that the astronomical

observations alone (which are but a single branch of the primary field work) greatly exceed in number and intrinsic value *all* the observations of the same kind made by Mr. Hassler during the *whole eleven* years that he had charge of the work in active operation. In this connection it should be mentioned that the present Superintendent has in five years occupied as *many primary* stations, and measured twice as many bases as the former Superintendent in twelve years. The 'outer and more dangerous coast,' which the writer elsewhere says 'has not been touched,' has been surveyed to the extent of twenty-eight miles *south of Cape Henlopen.* Great credit is due to Mr. Bache for commencing the work of North Carolina, with this very object of including the coast north of Hatteras. This is one of the conspicuous merits of his new system of operations, that such work can be begun separately, the final union with the other sections being deferred for the present. The survey is rapidly advancing to Cape Hatteras."—*April Number.*

In regard to several of these points, there are now printed documents not existing at the time our first article was written, and of which we will avail ourselves. The comparison then instituted between the two superintendencies as to work and expense was between four years and twelve. In the matter of expense we have now the means of making it between six years and twelve, which will give a more certain proportion.

1st. As to the quantity of work, our comparative estimate, which was as six to five in favor of Mr. Hassler, is attempted to be refuted on the authority of a tabular statement which accompanies a report from the Treasury Department to the Senate, dated February 8, 1849, and relates to the "expenditures and results of the United States Coast Survey." We repeat, that in regard to the real quantity of work, or its value for purposes either commercial or defensive, no correct estimate can be made, by comparing either surfaces of land or surfaces of paper. The bases assumed for it in the February number, namely, the number of miles of outer sea-coast, or the comparison of the areas of the secondary triangulation, or of topography, are the only ones which will exhibit the truth even approximately; and all these data, except the topography, which is admitted to be in favor of Mr. Hassler, are excluded from the table referred to. The area of the triangulation is made to include both primary and secondary; and the coast line in each survey is estimated by some method, to which the paper contains no clue. We cannot find the four hundred and five miles of sea-coast which is credited to Mr. Bache, unless it follows the sinuosities of Buzzard's Bay, and all the shores of Nantucket and Martha's Vineyard. If such be the grounds of the estimate, the quantity allowed to Mr. Hassler should include both shores of the Delaware, and the whole circuit of Long Island, and would be nearer 900 miles than 310, the length which is set down for it. We have examined the report already referred to, in hopes that it contained in detail the data from which its results have been derived, but these are looked for in vain; and we cannot better characterize this paper, than by referring it to that class of arithmetical computations for which we have already given the Superintendent due credit. And while on this part of the subject, and to render any further notice unnecessary, we will refer to another arithmetical operation, performed, it is to be presumed, by Lieut. Davis himself. In the table referred to, the coast line already finished is set down at 710 miles; in the speech of Senator Davis,* of Mississippi, the whole coast

* Speech of Mr. Davis, of Mississippi, on the subject of the Coast Survey.—Page 7.

122

is admitted to be more than 28,000 miles in length. At page 413 of Lieut. Davis's reply, he says, "the statement that but *one-eighth* of the coast of the United States has been surveyed, and that parties are engaged in, and have been sent to either Mexico or California, is not altogether consistent with the real facts; at least *twice* that extent having been surveyed, and the dispatch of any party whatsoever to Mexico or California never having been either made or contemplated." Now taking Lieut. Davis' data, quoted above, we should like to know by what process 710 is made *two-eighths* of more than 28,000. Equally admirable and satisfactory is the arithmetical part of the speech of the honorable Senator referred to, in which he arrives, by an indirect process, at this conclusion, that because 710 miles of the coast have been finished in seventeen years, therefore the small residuum, 27,910 miles, will be finished in fifteen years. The mystification about this process is, that the northern triangulation, which will not have its topography finished in at least eight years, is taken as part of the finished Survey. We are happy to learn that no parties have been sent either to Mexico or California, but the *official* information, as to the destination of Coast Survey parties already sent to the Pacific, is not entirely satisfactory. Mr. Davis' statement, "that the astronomical observations alone (which are but a single branch of the primary field work) exceed in number and intrinsic value all the observations of the same kind made by Mr. Hassler during the whole eleven years that he had charge of the work in active operation," is certainly very modest, and may perhaps be true. Mr. Hassler, though admitted by Mr. Davis to be a man of skill and science, was nevertheless something of a utilitarian; and if he had not been such, the coercion of public opinion would probably have made him so. He knew that astronomical observations could be made at any time (better, probably, in the next century than in this) at the principal points of the Coast Survey; and that what the country looked for and demanded, was results practical and useful to the commercial interests. Sufficient astronomical observations were made to determine nearly the difference of longitude between some points on our coast and the principal meridians of the old world; and to do more than this, Mr. Hassler had neither means nor instruments. In the matter of sounding, which is not only stated in numbers, but also *in fathoms of line*, (this is another application of the transcendental arithmetic already mentioned,) and in which the work done by Dr. Bache greatly exceeds that of Mr. Hassler,* it is to be presumed that, under any superintendence, seventeen vessels would do more sounding than four. So much for the *quantity* of work.

Lieut. Davis' next point is a flat denial. "The number of assistants has not been doubled." On this subject there is at present a document, namely, (Executive Doc. 29,) a report from the Secretary of the Treasury, communicating one from the Superintendent of the Coast Survey, "in relation to the number and cost of vessels in the Survey of the Coast of the United States, the number of persons *annually* employed, and the sale of maps by the disbursing agent of the Coast Survey." This report, though called for by a resolution of the 28th of December, and evidently requiring but little labor or research in its compilation, was not sent to the Senate till the 9th of February, and had not been printed at the adjournment of Congress. According to this paper, the following was the number of persons annually employed under the different superintendencies:—

* The square feet of paper and fathoms of sounding line contained in the Superintendent's tabular statement, are specimens of his uncontrolable propensity to such quaint computations.

	1843. Mr. Hassler.	1848. Mr. Bache.
Superintendent and assistants	17	21
Draughtsmen	..	9
Computers	..	3
Disbursing agent	..	1
Clerk	1	1
Engravers	4	8
Printers	2	2
Instrument makers	2	3
Artificers	1	1
Total	27	49

Even as here stated, the number under the last superintendence is nearly double that under the first; but when coupled with the following explanation, contained in the body of the report, it will be seen that the proportion may be much greater. The explanation is as follows:—"There are, *besides* these, persons temporarily employed by the Superintendent and assistants as hands, and in the *capacities recognized by the regulations* in the field parties and office, the number in each part varying with the requirements of the service in which the parties are engaged, *but paid at specific rates, under the law by the regulations of the* Treasury Department for the Coast Survey." It will be evident that the resolution has produced only information of the number of persons employed *by the year*, and that a portion of the *personnel* has escaped the census altogether. We are satisfied that the number of civil assistants mentioned in the February number (sixty-one) is rather under than over the truth. But it was not to the civil assistants alone that we referred when speaking of doubling "the official patronage of the Superintendent," but of the whole *personnel* of the Survey. The following comparison, even admitting the imperfect information communicated in the report, shows the relative *personnel* of the two Superintendents:—

	Mr. Hassler.	Mr. Bache.
Civil assistants	27	49
Naval officers	18	49
Total	45	98

This statement of the February article is therefore not contradicted by any documentary evidence.

The next point made by Lieut. Davis is also a flat denial. He says, "the appropriation has not been, for the five years, nearly double that with which the previous superintendence closed." Upon this point we have now also documentary information, contained in the report above quoted, and in one from the Register of the Treasury,* which will enable us to compare the respective expense for six years of Dr. Bache, with twelve years of Mr. Hassler, and thus arrive at a more perfect determination. The following is the official statement of the legitimate appropriations:—

MR. HASSLER.

1807, February 10	$50,000 00	1839, March 3	$90,000 00
1812, " 26	49,284 25	1840, May 8	100,000 00
1816, April 16	29,720 57	1841, March 3	100,000 00
1816, " 27	54,720 57	1842, May 18	100,000 00
1832, July 10	20,000 00	1843, March 3	100,000 00
1833, March 2	20,000 00		
1834, June 27	30,000 00	Total	$1,003,725 39
1835, February 13	30,000 00	Deduct amount carried to surplus fund	96,407 37
1836, May 9	80,000 00		
1837, March 3	60,000 00		
1838, July 7	90,000 00		$907,318 02

* Executive Documents 4 and 29.

MR. BACHE.

1844, June 17.....	$80,000 00	1849, March 3.....	$30,000 00
1845, March 3.....	100,000 00	1849, " 4.....	186,000 00
1846, August 10.....	111,000 00		
1847, March 3.....	146,000 00	Total.....	$818,000 00
1848, August 12.....	165,000 00		

In the estimate of expense, contained in the February article, we had supposed that the Washington and Gallatin had been transferred from the revenue service to that of the Coast Survey without any consideration paid from the appropriations. In this it appears we were mistaken, those vessels having been purchased by the Coast Survey from the government. Indeed, so strict seems to have been Mr. Woodbury's construction of the laws both of 1807 and 1832, that previous to selling the Washington to the Survey, she had been chartered or hired by it in the usual manner. Mr. Woodbury does not seem to have been of the opinion of the late Secretary of the Treasury,* that the laws of 1832 revived that part of the law of 1807, which authorizes the transfer of public vessels to the Coast Survey, else he would have never received payment for the use of the Washington while she belonged to the revenue service.

Both the Secretaries have high legal reputations, and would not of course be allowed to overlook any point in the construction of statutes so plainly worded. The documents referred to also afford data in estimating the value of vessels transferred to the Coast Survey.† The cost of one of the steamers is set down at $120,000; and from it and the description of the others, we may arrive at some conclusion as to the value of the vessels thus transferred.

In these documents, also, it is estimated that no extra expense is incurred by the government in employing officers of the army and navy in the service, there being no increase of pay to the army; and to the navy, only the difference between the pay on leave and the pay when on sea service. This opinion, so far as the navy is concerned, is sanctioned by a communication from the late Secretary Upshur. It presents a new view of the case, and would seem to be as reasonable as the supposition that if one purchases stocks above par with money, he only pays the premium. In making the comparative estimate of the expense the whole pay is included, as it is done in both cases. There can be no wrong to either party.

The following is a statement of the vessels now in the service of the Survey of the Coast, with an estimated value of those transferred from the Treasury, War, and Navy Departments.

Name.		Value.	Name.		Value.
Bibb‡.....	From Treas. Dept.	§$120,000	Hassler.....	Built.....	.....
Legare‡....	"	100,000	Bancroft.....	"	.....
Walker‡....	"	120,000	Vanderbilt...	"	.....
1 small steam vessel and 2 schooners..	From War Dept.	60,000	Gerdes.....	"	.....
Washington.	Purchased.....	.....	Phœnix....	From Navy Dept.	$6,000
Gallatin....	"	.....	G. W. Bache	"	4,000
Nautilus.....	Built.....	.....	Wave.....	"	5,000
Petrel.....	From Navy Dept.	5,000	Wise.....	.....	.....
J. Y. Mason.	Built.....	.....	Nymph.....	Built.....	.....
			Total value.....		$420,000

* See letter of the Secretary of the Treasury to the Chairman of the Committee of Commerce, Ex. Doc. 26.

† Executive Document 26, pages 5 and 6.

‡ Steamers.

§ Document 26, page 4; 29, page 2.

The comparative estimate, according to these more recent authorities, will stand thus:—

	Mr. Hassler, 12 years.	Mr. Bache, 6 years.
Legitimate appropriations.....	$907,317 88	$818,000 00
Constructive appropriations, vessels.....	.....	420,000 00
" pay.....	260,000 00	324,000 00
Total.....	$1,167,317 88	$1,562,000 00
Average annual expense.....	97,276 49	260,333 33

If the pay be omitted in each estimate, still the average annual expense of the last superintendence is more than double the first. It cannot be said that because the steamers could not be sold, that therefore they are worth nothing; or because they can, at the pleasure of the Departments, be transferred back again to their original service, that therefore they do not now pertain to the Coast Survey. The object of this communication is to show what are now and have been the resources of the Superintendent of the Coast Survey, and to compare its results with the establishment which preceded it.

Lieut. Davis is perfectly right in saying that no revenue vessels were used until 1847. Previous to that time the Departments hired and sold, subsequently they transferred. That no equipages were transferred is not strictly correct. The equipage of a vessel consists, we suppose, of boats, anchors, cables, &c., and it is to be presumed that all these were furnished in this case.

The statements concerning the abandonment of steam vessels in the revenue service, and the reasons for transferring three of them to the Coast Survey, which is given in the documents referred to, exhibits some facts and reasonings which are curious at least, if not inconsistent with each other. It seems that when the late Secretary of the Treasury came into office he found contracts existing, made with his predecessor, for the construction of steam vessels for the use of the revenue service. Being of opinion that such vessels were not adapted to that service, he at first suspended the contracts, but afterwards revoked the suspension in conformity with an opinion of the Attorney General, that the faith of the government had been pledged to their execution, and could not be broken. Two of the steamers, the Bibb and Legare, were furnished with propellers, and the Walker with side-wheels. The two first vessels turned out failures, not answering the purpose for which they had been constructed; but the other one, the Walker, was found to be a vessel of the first class, answering every expectation. It appearing, by retaining these vessels in the revenue service, that an expense must be incurred of several hundred thousand dollars, it was decided to dispose of them, and for this purpose one of the imperfect vessels was offered for sale. As she did not command any price at all comparable with her cost, the steamers were turned to other ends, and three of them, including the Walker, were transferred to the Survey of the Coast. The annual saving to the revenue service by dispensing with them is estimated at $39,000. Now it would appear that, in the Coast Survey, the use of these vessels, extending through at least seven months of the year, must be more expensive than if they had been left in their original destination; and as both services are equally supported by the government, it seems curious, if not inconsistent, that what occasioned a loss of several hundred thousand dollars in one service, should be found an economical arrangement in the other.

Lieut. Davis says that "great credit is due to Mr. Bache for commencing

the work in North Carolina, with this very object of including the coast north of Hatteras. The Survey is rapidly advancing to Hatteras." The survey of North Carolina was commenced, under instructions given to the writer of this paper, dated April 29, 1843, eight months before Mr. Bache became Superintendent. His great credit on this point is therefore solely due to his absorbent qualities. It does not appear that the Survey is one inch nearer Cape Hatteras now than it was then.

In regard to the errors in the original construction of the Chart of Long Island and the Delaware, which we stated as having "more than doubled the expense of the charts, and delayed for about two years their publication," we reiterate the assertion that such is the fact. An investigation will prove it to be true.

The next point of the communication of Lieut. Davis is personal in the wrong sense, inasmuch as it insinuates charges of a serious nature against some person, without designating either the person or the crime. It were needless to say, that they are not both understood. But the public will probably soon be put in possession, from another quarter, of the facts of the case in a more authentic shape than can be given at present.

In the remaining parts of Lieut. Davis' paper, there does not seem much of importance to be considered. In regard to the monthly reports, he admits that they do not contain a single item of the information mentioned in the February number as having been directed by the regulations of 1843. He admits, also, that the name of the present Superintendent appears upon all the sheets of the work, which is all that was asserted.

The author of the article in the February number apologizes for having overlooked Silliman's Journal. He was under the impression that it was devoted almost exclusively to chemical subjects; and even if it had not been, it could scarce have been expected to publish a paper which would have occupied at least three of its numbers.

In regard to the Superintendent's compensation, we are firm in our opinion that it has been *at least* equal to the amount stated in the February number. Nothing can determine this but an examination of the accounts.

We now take leave of Lieut. Davis, who seems to wonder if there be any mismanagement or corruption in the Coast Survey, that such defects should not have been first exposed by its friends and *employes*. In other words, he seems to hold opinion with some of the aborigines, "that a man should first show his manhood by beating his mother." Of the spirit in which his paper is written we say nothing, though in this respect he has expended some acumen upon us, and filipped us with a few quotations. We agree with him in his estimation both of Milton and Shakspeare, though we cannot but think that the comparison between the Coast Survey and the Lady in Comus is somewhat unfortunate. He will remember that though the lady had really "the strong siding champion" and two brothers in attendance, she nevertheless lost her way, and was only rescued by supernatural interference. Perhaps Lieut. Davis anticipates some such danger in the present case, and intends playing the part of the attendant spirit himself. If so, we commend him to his function, which is certainly one both honorable and becoming.

Art. IV.—LAW OF DEBTOR AND CREDITOR IN MARYLAND.

NUMBER II.

MERCANTILE CONTRACTS.

In a former article on this subject, which appeared in the April number* of the *Merchants' Magazine*, were pointed out some peculiarities of Maryland Law, affecting the commercial relations; in this it is proposed to consider some points in the Law of Mercantile Contracts, noting any legislation concerning them, and illustrating them by decisions in the Maryland Courts.

The law governing mercantile contracts is comparatively of modern growth, founded in principles of equity and fair dealing, and is therefore nearly the same in all civilized countries; the difference therein having reference generally to the remedies given for the breach of them. The interpretation of contracts, and the rights and duties of the parties, are governed by the law of the State in which they are made, or in which they are to be executed. If valid there they are valid everywhere, and the execution of them may be enforced in any other, unless they be against the public policy or morals, or the law of the country where the action is brought. This latter also determines the form of the remedy, and the time and mode of suit. The most usual of these contracts are those of Sale, Bills and Notes, Guaranty, Debt, Charter-Parties, Insurance, Bottomry, and Contracts with Carriers, Seamen, &c.

The form and requisites of the CONTRACT OF SALE are governed by the Statute of Frauds, (1661,) which enacts (sec. 4) that no action shall be maintained on *any* agreement for the sale of goods, wares, &c., that is not to be performed within one year, unless the agreement be in writing, signed by the party to be charged or by his lawful agent; and, (sec. 17,) that *no contract* for the *sale of goods*, &c., *of the value of* £10 *and upwards*, shall be valid, unless the buyer shall accept part of the goods, and actually receive the same, or give something in earnest to bind the bargain, or in part payment; or unless some memorandum in writing of the bargain be made and signed by the parties to be charged, or by their lawful agents. The decisions in Maryland in regard to what constitutes a sufficient delivery, part payment, memorandum and signing, are generally consonant with those made in the other States, and in England.

A bill of parcels is evidence of a contract, if accepted by the purchaser from an agent of the seller; the acceptance makes the agent of the seller the agent of the purchaser also for signing the purchaser's name. By an act of 1729, a bill of sale of personal property, executed in good faith, acknowledged and recorded within *twenty* days, dispenses with the necessity of actual or symbolical delivery, and *vests the property* in the purchaser, although the seller was indebted at the time, and continues in possession after-

* In that number there are one or two omissions and mistakes of the printer, which are corrected in this note. At the end of section 3, p. 392, should have been inserted as follows:—"And the oath or affirmation of any *clerk*, *store-keeper*, or disinterested credible witness, taken before any judge, or justice, or court of this State, to the delivery of goods or money by any merchant, &c., to any person within this State, shall be good and sufficient evidence to charge the person to whom paid or delivered, *provided such oath be made within twelve months from the date of the articles delivered*, and that the person claiming shall also, before the time at which defendant ought to plead, make oath that he has not been paid, &c., as above." Under this law the correctness of a merchant's books may be proved, as well as the delivery and price of the articles sold, once every year, by the oath of his clerk, &c., and it has been a custom with some here so to do. On the same page, in section 5, it should be "21 in females as well as males;" and in the 37th line on page 394, it should read "*for* violation of any duty," &c.

127

REPLY

TO AN ARTICLE IN THE FEBRUARY NUMBER

OF

HUNT'S MERCHANT'S MAGAZINE,

ON THE

COAST SURVEY OF THE UNITED STATES.

By Lieut. CHARLES HENRY DAVIS,
OF THE UNITED STATES NAVY.

April, 1849.

NEW YORK:
PRESS OF HUNT'S MERCHANT'S MAGAZINE.
GEORGE W. WOOD, PRINTER, NO. 15 SPRUCE-STREET.
1849.

Blank page retained for pagination

T28

REPLY TO AN ARTICLE

IN THE

MERCHANTS' MAGAZINE

ON THE

COAST SURVEY OF THE UNITED STATES.

To the Editor of the Merchants' Magazine, etc.

DEAR SIR :—If the advice of Mr. Burke, "to outlive scandal, is the best mode of replying to it," were as applicable to institutions as it is to individuals, there would be no occasion for any notice of the attack upon the Survey of the Coast of the United States, contained in the February No. of this Journal. The attack and its author might be left to the judgment of time, which tries all such offenders, and to the power of truth, which must ultimately prevail.

Or it would be quite sufficient, if any comment were made, to rely upon authority, and to oppose to the sneers and imputations of an *anonymous* writer, the unqualified approbation and support freely awarded to the Coast Survey, and its distinguished head, by such institutions as the American Academy of Arts and Sciences in Boston, the Philosophical Society and Franklin Institute of Philadelphia, the University of Virginia, the Marine Societies and Chambers of Commerce in almost every Atlantic city, from Boston to New Orleans; and besides these, the memorials of the principal merchants and underwriters in the northern capitals. From one class of these authorities we should learn that men of science, who are fully competent to give an opinion on the subject, do, after mature and careful examination, entirely approve of the fundamental principles upon which the survey is conducted, and of all the methods and processes by which those principles are brought out in practice; and from

129

the other, that the Coast Survey, as it is at present established, has heretofore rendered, and continues to give, to commerce the most important facilities and improvements. He who opposed his own assertions, with or without a name, to such an array of authorities, would subject himself to the sarcastic remark of Dr. Johnson, that "the man who attempted to prove everybody else wrong, succeeded at least in proving one person to be in error." It can hardly be imagined, even by the most skeptical, that so many men of high literary, scientific, and social standing would combine to misrepresent, or to conceal the truth, still less that they are ignorant of the matter about which they have written.

But while we record here the cordial and valuable support which the Coast Survey has received, during its recent troubles, from generous friends in every quarter of the country, we must not forget that it is a part of our obligation to those friends to relieve the institution, concerning the management of which they have assumed a certain responsibility, from any suspicions of impropriety, however unfounded.

To justify its character and conduct, is a part of its debt to its supporters; and, disagreeable as the task of a reply must be to ourselves, we enter upon it as an act of duty.

And first, we wish to call the particular attention of those who have read the paper referred to, to the temper with which it is written. It is characterized by nothing so strongly as its merely personal ill feeling towards Professor Bache, the present Superintendent. This is the one trait, before all others, which marks its tone and spirit. Sneers against his capacity are freely indulged in; accusations are brought without reserve, or stint, against his personal and official integrity; and the basest motives of conduct are ascribed to him without even the observance of the most ordinary courtesies of language. To these things we do not intend to make any answer. They need no answer.

An established reputation for learning, usefulness, and honor, like that of Mr. Bache, is of itself a sufficient defence. The lustre of a good life cannot be tarnished by a single breath of scandal, uttered by a mouth which refuses to pronounce its own name. This is not the cause of one man, but of all good men. It is the cause of society, which cannot, for its own sake, suffer that an honorable name should be affected by anonymous attacks of this kind. There is no necessity for a reply here; and, moreover, we are admonished that we should not answer such a writer according to his folly, or otherwise, lest we become like to him, or he be made wise in his own conceit.

But there is one comment which it seems worth while to pass upon this portion of our opponent's writings. If one-half of what he asserts is true, why did he not bring the subject, with the authority of his name and position, under the notice of some member of the Executive Government, or under that of Congress? It was surely no charity to Mr. Bache that prevented this mode of action. The Coast Survey is a public institution, immediately responsible to the government; its records are open to examination, and its reports are distributed throughout the country.

If those abuses exist which the writer pretends to point out, it cannot be but that there are men of sufficient patriotism, intelligence, and independence, either in the administration, or in Congress, to demand their correction. This view is worthy of reflection with those whose minds have been at all affected by the writer's statements. But the writer preferred to preserve his incog-

nito, and we entirely disclaim all present desire to penetrate any farther than we have already done, into the heart of his mystery.

Although we have thought it due to the friends of the Coast Survey to make some reply, yet it would be tedious and unprofitable to follow the writer through every paragraph of his paper.

After showing some of his errors and misstatements, we may claim the benefit of the legal maxim which is applied to incompetent witnesses. The writer, in the course of some historical remarks upon the Survey, says, "that a geodetique operation, such as was commenced under its authority, had not been contemplated or understood by the government," in the original law creating the Survey of the Coast. (P. 133.)

We may suppose that the writer is unacquainted with the nature of a geodetic survey, and with the true history of this particular work. The general plan and purpose of this undertaking are laid down for the first time in a letter of Mr. Gallatin, addressed to the learned men of the country, whom he consulted as to the best mode of carrying out the provisions of the law of 1807. This general plan is defined in the following words:—

1. The ascertainment, by a series of astronomical observations, of the true position of a few remarkable points on the coast.

2. A trigonometrical survey of the coast between those points of which the position shall have been astronomically ascertained.

3. A nautical survey of the shoals and soundings of the coast, of which the trigonometrical survey of the coast itself, and the ascertained position of the light-houses, and other distinguishable objects, would be the basis.

It is not necessary to say to those who are informed upon such subjects, that this is the very language by which a geodetic survey, with a hydrographic survey attached to it, is accurately described. The connection, by trigonometrical measurements, of a series of points, spread over a seacoast of great extent, (like our own,) the position of which points has been independently fixed by a series of astronomical observations, is only a form of words by which the idea of a geodetic survey is conveyed. It is the extent of the coast which gives the geodetic character to the work. In the triangulation of so large a region, it is requisite to have a regard to the irregularly elliptical figure of the earth; in common surveying, the field is so limited, that the deviations of the earth's surface from a plane are not noticeable. And so also of astronomical determinations. In the great Survey, they must be multiplied, or constitute a series, on several accounts relating to the form and materials of the earth's surface, and to the necessity for remote verifications. In the limited survey, (as in the nautical survey of a harbor, or group of islands,) the independent astronomical determination of some one or two prominent points is generally sufficient.

In the former case again, the formulæ or rules for calculating the triangles embrace terms depending on the value of the earth's ellipticity, or expressions of the radii of the parallels and meridians. In the latter case, the rules for solving the triangles are simply those of plane trigonometry. Mr. Hassler, to whom, among others, Mr. Gallatin's letter was addressed, details in his reply the methods of conducting a *geodetic* survey.

The writer was probably not aware of these scientific distinctions, or he would not have made such an erroneous assertion.

Upon this point the writer makes elsewhere the following remark:—"At that time (1807) the word 'Survey' conveyed the notion of a temporary and limited operation." (P. 132.) He is probably not aware that the trigono-

metrical survey of Great Britain was commenced twenty years before this period; that the great meridianal measurement of Mechain and Delambre was (the original section) then completed; and that Mr. Hassler, consulted by Mr. Gallatin, and appointed by him to superintend the Coast Survey, had actually taken part in the triangulation of the Canton of Berne. The meaning of the word "Survey," when applied to an extensive coast, *might therefore* have been known in this country, without assuming any remarkable merit on the part of Mr. Gallatin and his advisers. Mr. Hassler *might have* communicated the definition of the word *geodetic* to Mr. Gallatin; at any rate, it is very curious that the latter should have defined that word so exactly in laying down the plan of the Coast Survey in his circular letter, that his language could not now be improved either in precision or clearness.

We are very far from wishing to charge the writer with any deception here; but we think that we should be permitted to say, without rudeness, that a person as uninformed as the writer evidently is, should speak with less confidence. It is certainly no discredit to be ignorant of the history and nature of geodesy; but it *is* an offence against modesty, being ignorant, to attempt to instruct the public.

The writer seems to have a theory on this subject, one of the most important deductions from which was made during the lifetime of the late Superintendent. It was this; that no American could be found who was capable of filling Mr. Hassler's place. Yet the science of geodesy, in its principles and practice, is very complete, and is ably and comprehensively treated by several eminent mathematicians. We are led to think that this deduction was made to serve a purpose.

There is another subject upon which, also, the writer seems to indulge in theoretical views. He ascribes to the officers of the army and navy a desire to get possession of the Coast Survey after the civil *employes* had been dismissed from its service by the act of 1818.

"Under such circumstances," he says, "it was but natural that the officers of our army and navy should look upon a work like the Coast Survey as their peculiar property, and endeavor to place themselves at its head; and there is no doubt that the suspension of the work at that day, was in a great measure due to the operation of such a feeling." (P. 134.)

Here again the writer's theory is singularly erroneous. When the connection of Mr. Hassler with the Coast Survey was suspended by the law of 1818, and the great object to which he had devoted the energies of his mind was defeated, it was actually in the army that he found his warmest personal friends, and his most able public supporters. General Swift, of New York, (late of the Engineers,) and Colonel Abert, the present Chief of the Topographical Bureau, maintained towards him a strict and unswerving fidelity, which no temptations of personal or professional aggrandizement could lead astray.

And we must say that in this, these gentlemen acted quite as much after their own honor and dignity, as after Mr. Hassler's desert. During the later, and very serious troubles of 1843, as Mr. Hassler's friends well know, it was only by means of the liberal, disinterested, and firm support of such men as Colonel Abert, Lieut. Col. Kearney, Major Turnbull, and Captain Swift, that he kept his office.

With regard to the navy, the case is equally striking. It was, in fact, the head of the Navy Department, the eminent Secretary from New Jersey, Mr. Southard, who procured the revival of the law establishing the Coast Survey,

and with his accustomed ability and high authority, advocated the unquestionable superiority of a connected system of operations, over the then existing (but now happily exploded) plan of detached surveys.

If these facts had been known to the writer, his regard for truth would undoubtedly have prevented him from indulging in speculations which reflect discredit upon these two branches of the public service. It is but just to the public, however disagreeable it may be to the writer, to say, that he should have known them; that it was his duty, having presented himself as an authority, to be acquainted with such well known facts in the history of the Coast Survey.

But, besides the wrong to individuals, and to the services, which is included in these errors, it suits our present purpose to notice particularly their moral effect upon the character of the writer himself. *They betray a flippant carelessness* in the statement of mere facts, which, taken in connection with his labored plausibility of style, and his amiable and amusing alliterations, makes him appear especially unsound as a public informer.

More conspicuous than all, are his strong personal dislikes. They are not only ardent, but general. He attacks Professor Bache in a manner which leads to the suspicion that he has had some personal or official contest with him. He sneers at Professor Henry, the Secretary of the Smithsonian Institute, as if towards him also he entertained a sense of personal injury. He says some very hard things of several of the assistants of the survey, both civil and naval; and finally, he includes the whole American Philosophical Society of Philadelphia in one severe and comprehensive denunciation. He seems, in short, to have taken his place in the seat of the scornful.

Now it cannot be thought either unreasonable or harsh in us to observe, (without committing the folly of attempting a reproof,) that this is not the state of mind most favorable to an inquiry into the progress and condition of the Coast Survey; that in the practical affairs of life we do not adopt, or rather we do reject, the opinions and declarations of those who are laboring under prejudices, and are controlled by strong resentments; and that the man who is so deluded either by his feelings, or in his judgment, as to regard Professor Bache as being no more than a "retired schoolmaster," when in fact he is, with one or two exceptions, perhaps, better known in Europe to such men as Airy, Hamilton, (of Dublin,) Smythe, Arago, Humboldt, &c., &c., for his contributions to science, than any other person in the United States—the man laboring under such a hallucination of his intellect (and we are not allowed to doubt that the writer speaks according to his *present* honest convictions) is not entitled to ask those who do not share in his anger, to accept, without qualification, his opinions.

We do not fail to notice how this unkindness is obscured by a gracious show of regard for the public interests, and a virtuous condemnation of assumed wrongs. But then again we see in the writer's declamations more of the impassioned earnestness, as well as some of the strategetical skill, of warfare, than the calm and temperate dignity of the bench, and reminding the reader that

> "There is no vice so simple, but assumes
> *Some* mark of virtue on his outward parts."

We invite them to make their own estimate of the motives and qualifications of our opponent.

But it still remains for us to point out in detail some of his *mistakes*—we

call them by the most modest terms, for, like the pretended Sir Topas, we are one of those gentle ones that will use the devil himself with courtesy.

The most important point which the writer endeavors to make, is upon a comparison of the work executed under the late and present Superintendents, considered relatively to their means.

This is another of the writer's theories. We extract from his paper the following paragraph, the chief purpose of which, it will be observed, is to bring discredit upon the character of the present Superintendent.

"In taking the field in 1844, the Superintendent assumed the northern portion of the Survey, which had been carried to Point Judith by his predecessor, under the immediate charge of one of the principal assistants. The accuracy of the work thus far had been verified by the last line of the triangulation, agreeing, within a very small limit, (a fraction of a foot,) with the same line of Mr. Borden's triangulation, made for the survey of Massachusetts, and depending on another base.* In taking this part of the field, instead of leaving it to the assistant, who had so honorably and judiciously managed the preceding and more difficult part of the operation, the Superintendent not only secured himself an easy and healthy country to operate in, but he had before him the points already established by Mr. Borden, each marked with a monument. He had also Mr. Borden's results to compare always with such as he might derive himself; and, moreover, he had with him one of Mr. Borden's assistants, who knew the country, and thus spared him any trouble of reconnaisance. Indeed, it is known that an attempt made by this assistant to change a principal line of Borden's triangulation, though made at great expense and loss of time, altogether failed; thus showing clearly the ability with which the points of the previous triangulation had been selected. The Superintendent, in the four years of his personal field work, has scarce yet passed the limit in which Mr. Borden had preceded him; and if it be ever judicious in such matters to raise questions of economy, it might be well worth asking whether the work done in the field by the present Superintendent, at immense expense, has been necessary at all.† To the assistants were assigned the more southern portions of the work; and two bases of verification, near the extremities of the triangulation, which had been furnished by Mr. Hassler, were measured by them in 1844."—Pp. 140–'1.

To which we make the following reply :—

When the present Superintendent came upon the Survey, he found the first section of the work nearly completed, and he thought he would best meet the views and wishes of Mr. Hassler's friends by assigning to his principal assistants the closing up of that part of the work which had been commenced, and mainly performed, under Mr. Hassler's direction. Accordingly, one of the two principal assistants was sent to the Chesapeake to measure a base of verification, and connect it with Mr. Hassler's main triangulation; whilst the other one measured a base of verification on the eastern end of the work, and reconstructed the northern part of the main triangulation (which was necessary) in Delaware Bay. On taking up the main triangulation on the north, to begin a new section of the work, Mr. Bache only assumed his proper place as the head of the Survey. The scheme of this main triangulation differed, essentially and necessarily, from that of Mr. Borden; and of sixteen stations occupied at the north by Mr. Bache, only five were identical with those used by Mr. Borden. Mr. Bache did not compare his results with those of Mr. Borden; the means and instruments of the latter were so far inferior to those of the Coast Survey that such comparison was not desirable. The statement of an attempt to change a principal line of Mr. Borden is a *mistake.*

* This close agreement of Mr. Blunt's with Mr. Borden's work is nowhere spoken of in the Coast Survey reports; nor is there a single atom of credit given to Mr. Borden, though it is said that he was one of the applicants for the superintendence, and withdrew his claim in Dr. Bache's favor.

† At the stations of the main triangulation, under the present superintendence, there are usually thirty tents, with the corresponding equipage.

The Superintendent has passed far beyond the limits of Mr. Borden's triangulation, into the States of Maine and New Hampshire. It is implied in the extract that this comprises the whole personal field work of the Superintendent. So far is this from being the case, that Mr. Bache has measured two bases—one on Dauphin Island, (Alabama, coast of the Gulf of Mexico,) and one on Bodie's Island, (North Carolina,) besides connecting the Chesapeake with Washington by triangulation—for the determination of the first meridian, and as a check on the secondary triangulation of the Potomac.

The note about the tent is striking, but unfortunately erroneous.

The following paragraph is also designed to illustrate our author's theory :—

"If the five years' work of the present Superintendent, with a *personnel* at least twice as large as the largest ever employed under the previous superintendence—an appropriation more than eight times greater than that with which the work began, and nearly twice as large as that with which the former superintendence closed—and with vessels and equipages furnished by the Revenue Bureau of the Treasury Department, to the amount of $240,000, be compared with the eleven years' work done by his predecessor, it will be seen, even using the Superintendent's arithmetical process, that there is but little difference in the proportional quantities of work done. I exclude from this all comparison of the area of the primary triangulation. The reoccupation of Borden's triangulation put the Superintendent at once in the possession of triangles with sides of from eighteen to seventy miles in length, and superficial miles by the thousand were covered with more ease than hundreds in any other portion of the Survey."

1. The first two lines are erroneous. A reference to the table hereinafter given will prove this. In every case, except the topography, which has been judiciously curtailed by diminishing the distance inland to which the work is carried, and increasing the accuracy of the portions surveyed, more work has been done in five years than in the preceding twelve. The number of assistants has *not* been doubled. The appropriation has *not* been for the five years nearly double that with which the previous superintendence closed. No equipages have been transferred from the Revenue Bureau, and no vessel of that department was used, until 1847.

The writer excludes from his calculation the most important part of Mr. Bache's work—the most important in extent and valuable in results. In this part of the work it is strictly accurate to say, that the astronomical observations alone (which are but a single branch of the primary field-work) greatly exceed in number and intrinsic value *all* the observations of the same kind made by Mr. Hassler during the *whole eleven years* that he had charge of the work in active operation. In this connection it should be mentioned that the present Superintendent has in five years occupied as many primary stations, and measured twice as many bases, as the former Superintendent in twelve years. The "outer and more dangerous coast," which the writer elsewhere says "has not been touched," has been surveyed to the extent of twenty-eight miles *south of Cape Henlopen.* Great credit is due to Mr. Bache for commencing the work of North Carolina, with this very object of including the coast north of Hatteras. This is one of the conspicuous merits of his new system of operations, that such work can be begun separately, the final union with the other sections being deferred for the present. The survey is rapidly advancing to Cape Hatteras.

The error in the geographical position of Galveston, which Professor Bache has prepared to correct, has no doubt, as the writer asserts, existed. The shame and danger of it belong to another people. It is highly to the credit of Professor Bache that the Coast Survey moved into Texas in two years

after the annexation, (it had no right to go there before,) for the very purpose of correcting these errors.

The writer next engages in an argument, purporting to be based on statistics, to show that not as much work has been done under Professor Bache's administration as was accomplished by Mr. Hassler; which sums up, however, with the very favorable admission, that the primary triangulation under Mr. Hassler's superintendence "covered a superficies of about 5,760 miles," while "the superficial miles of primary triangulation made by the present Superintendent up to 1847 will, by his estimates, amount to 7,803." This is certainly sufficiently complimentary to the industry of Professor Bache, when it is considered that Mr. Hassler's superintendence continued twelve years, while that of Mr. Bache, up to 1848, only reaches a term of four years. But he endeavors, as before, to discredit the utility of Professor Bache's work, by saying that it had been anticipated by Mr. Borden, in the trigonometrical survey of Massachusetts. This *error* has been previously noticed. As the writer has appended to his statement a summary in a tabular form, and has forced this comparison, a *correct* table is given below, in which the real quantity of work done under the superintendence of Mr. Hassler (a term of twelve years) is compared with that of Professor Bache, (for a term of five years,) in every variety of form in which it can be estimated. It may be noticed as an example of his very singular disregard for nice discrimination, even where the *mistake* is so palpable as to save the trouble of correction, that the writer in this part of his article speaks of the alluvial shores of the south part of Massachusetts as "bold and rugged coasts," "rock-bound shores," and contrasts them, in this respect, with the sunken and sandy beaches of the South, of which, in fact, they are the very type.

RESULTS OF THE COAST SURVEY AT DIFFERENT PERIODS FROM 1807 TO 1849.*

	From 1807–19.	From 1832–44. Mr. Hassler.	From 1844–49. Mr. Bache.	Total.
Reconnaisance, area in square miles	560	18,103	22,544	41,207
Triangulation	450	14,483	§19,309	34,242
Extent of coast line	...	310	405	715
" shore line, including bays, sounds, &c	...	3,215	4,211	7,426
Astronomical stations, number of	3	11	47	61
Magnetic stations	...	10	88	98
Vertical angles stations	...	7	34	41
Base lines, number of	...	1	4	5
Preliminary base lines, number of	2	.	3	5
Topography, area of, in square miles	...	6,222	2,755	8,977
Length of shore line	...	6,100	4,055	10,155
Hydrography, area of, in square miles	...	†9,623	‡15,086	24,709
" number of soundings	...	808,147	950,202	1,758,349
Gulf stream, soundings, number of	...	.....	1,410	1,410
" fathoms of line	...	.....	139,747	139,747
Current stations, number of	...	.....	160	160
Tidal stations	...	13	40	53
Specimens of bottom, number of	...	500	4,098	4,598
Total number of manuscript maps	...	326	295	¶621
Of these manuscript maps, No. prepared in office, being reductions, &c	...	29	123	152
Original topographical maps, number of	...	160	100	**260
Containing sheets, number of	...	298	131	429
Original hydrographical sheets, number of	...	103	72	††175
Duplicate hydrographical sheets, number of	...	34	.....	34
Containing sheets, number of	...	236	160	396
Records triangulation, bases, &c., number of volumes	4	95	233	332
Astronomical observations, &c., number of volumes	1	16	140	157
Computations, geodetic, " "	1	78	138	217
" astronomical " "	2	4	138	144
Magnetic observations " "	...	4	37	41

* Executive, No. 26. Senate. 30th Congress, 2d session. † 5,000 of off-shore work. ‡ 11,000 of off-shore work. § In sections III, IV, VIII, and IX, the primary and secondary triangulation are united in general. ‖ Coast line, including islands, bays, &c. ¶ 11,215 square feet of paper. ** 4,056 square feet of paper. †† 5,891 square feet of paper.

RESULTS OF THE COAST SURVEY AT DIFFERENT PERIODS—CONTINUED.

	From 1807–19.	From 1832–44. Mr. Hassler.	From 1844–49. M. Bache.	Total.
Magnetic computations, number of volumes	...	.....	15	15
Geodetic books, duplicates " "	1	26	128	155
Meteorological books " "	...	2	7	9
" " duplicates, number of volumes	...	.....	3	3
Original hydro'ical books, soundings, and angles, No. of vols.	...	179	380	559
Duplicate " " " " "	...	27	32	59
Hydrographic books, tidal and current observations, and tidal reductions, number of volumes	...	8	158	166
Astronomical differences of longitude	...	.....	66	66
Total of records	9	439	1,373	1,928
Engraved *plates of maps, number of*	...	5	24	29
" " " electrotyped, number of	...	.....	8	8
Published maps, number of	...	.....	21	21
Printed sheets of maps, number of	...	.....	24,249	24,249
" " distributed number of	...	.....	7,678	7,678
" " sale agent "	...	.....	12,979	12,979
Volumes in the library	...	.....	.....	655
Instruments, &c., value of	...	.....	.....	$149,513

The writer endeavors to make it appear that it is a fault in Professor Bache to have instituted re-surveys, even where he knew that the old surveys were actually in error. It is evident from this, that he does not fully appreciate the strictly accurate and scientific character of the work.

The writer also, on the same page, declares that the field maps and sheets of reduction of Delaware and Long Island were erroneous; that the correction of the errors "has more than doubled the expense of the charts, and delayed for about two years their publication," and that this was the *fault* of an assistant, who at that time held the fifth place, and has since then been promoted, and now occupies the second place on the Survey. Now the errors, such as are imputed, never existed; the pretended expense and delay in consequence of them were never incurred; and the assistant referred to was promoted for distinguished merit in the field in a southern section of the survey, (Alabama, Mississippi, and Louisiana,) into which he was the first to carry its operations.

The writer, in this paragraph, asserts that "other assistants have been removed," or displaced, and implies that this has been done by the unjust and arbitrary exercise of power on the part of Professor Bache. But one assistant has been removed during the superintendence of Professor Bache, and he for causes which we forbear to state, after investigation before a scientific commission, consisting of Professor Pierce, of the University at Cambridge, (selected by Professor Bache on the part of the Treasury Department,) of Capt. Talcott, late of the U. S. Corps of Engineers, (selected by the assistant in question,) and of Professor Davies, late of the West Point Academy, (selected by Professor Pierce and Capt. Talcott,) the decision of which commission was signed by all the members, and approved by the Secretary of the Treasury.

Having, as we believe, disputed at sufficient length the writer's hypothesis, (originating, no doubt, in his patriotic regard for the public interests, and not at all in merely personal motives,) that Professor Bache is deficient in integrity and capacity, we will proceed to point out, in a very hasty manner, some other trifling inaccuracies into which he has accidentally fallen. We may attribute these inaccuracies solely to a want of judgment and knowledge on the part of the writer concerning the matters of which he treats, though doubtless he is well informed on all other subjects. We venture to hope that we may do this without incurring any serious displeasure, for we are "very comptible, even to the least sinister usage."

The writer *assails* (p. 19) the American Philosophical Society, and charges it with delay and disrespect in the publication of Mr. Hassler's papers. By referring to the Transactions themselves, it will be seen that Mr. Hassler's papers occupy their place in regular order, with the exception of one short intervening article; and the precedence given to this last was owing, no doubt, to the unavoidable delay in preparing the engravings accompanying Mr. Hassler's papers.

Neither is it correct, as the writer says, that the American Philosophical Transactions constituted the only scientific journal then in existence. Silliman's Journal was published at that time; and the Memoirs of the American Academy, in Boston, made a scientific journal as much as the Transactions of the Philosophical Society.

The historical relation which follows, concerning the standards of weights and measures, is incomplete and inaccurate. The subject of standard weights and measures was first brought forward by Mr. Jefferson in 1790. (See Ex. Docs. of that year.) It was subsequently introduced by Mr. Izard, in 1791; by Mr. Jefferson again, 1795; by Mr. Harrison, in 1796; by Mr. Lowndes, in 1819; and by Mr. Adams, (Secretary of State,) in 1822. The part taken by each of these distinguished statesmen, in a measure of the highest practical utility, such as has commanded the attention of every nation at all advanced in political economy, is entitled to a place in history.

The writer next speaks of the gradual increase of the survey under Mr. Hassler without comment; but he makes the gradual increase under Mr. Bache, the present Superintendent, as we shall see hereafter, an occasion for attack. It is no part of our design to undervalue the labors of Mr. Hassler; but the writer, in order to disparage Mr. Bache, has given him credit such as Mr. Hassler himself did not claim. The main triangulation, at the time of Mr. Hassler's death, was only regarded by him as extending from the base line on Fire Island beach to below Philadelphia, and not, as is stated, to Point Judith. The triangulation from near New York to Point Judith, executed by Mr. Blunt, one of the principal assistants, was considered by Mr. Hassler only as a secondary triangulation, and was adopted as a main triangulation by Mr. Bache himself, after the measurement of a base of verification in Rhode Island.

The writer asserts, that, "four sheets of the large maps of New York Bay and harbor were finished, and the reduced sheets of New York Bay and Long Island were ready for the engraver, as well as the whole of Delaware Bay," "during the period of Mr. Hassler's superintendence."

One sheet only of the four was finished by Mr. Hassler. The others had been commenced, but were delayed after Mr. Hassler's death, by the necessity for making important additions to the hydrography, which occupied a whole working season. The reduced sheets of Long Island were not, as the writer hypothetically assumes, ready for the engraver. The project for the map of Delaware Bay, the reduction of the whole land work, and a part of the hydrographical work, were made under the present Superintendent. Very extensive and important additions have been made to the hydrography of Long Island Sound, and some additions to the hydrography of Delaware Bay.

The name of the present Superintendent does not, as the writer thinks, occur in the title of the New York chart, but is merely placed in connection with the work actually executed under his direction, and for which he is therefore responsible.

It is not correct, as is said by the writer, that the soundings had been carried far enough to sea for the purpose of navigation, in 1843. The weights and measures intended for the custom-houses had *not*, as he *imagines*, been completed; and as to the hope of procuring copies of the English standards not being realized, as he says, the writer discovers a want of *perfect* familiarity with the subject, in not knowing that the British standards have not yet been made. The *equipment* of the naval parties is paid chiefly from the *Coast Survey* appropriation, and not from that of the *Navy*, as the writer assumes.

The statements of the writer concerning the transfer of some of the revenue steam vessels to the Coast Survey are also theoretical. Captain Alex. V. Frazer, late Chief of the Bureau of the Revenue Marine, in his *annual report for* 1847, recommended the abandonment of the use of steam in that branch of the public service, estimating the saving to be thereby effected at between three and four hundred thousand dollars. One of these vessels having been put up for sale in New Orleans, the single bid of three thousand dollars was made for her. She cost one hundred and twenty thousand dollars. After this vain attempt to dispose of these vessels, Capt. Frazer recommended in the same *annual report*, that, in order to prevent this melancholy sacrifice of public property, they should be transferred to the Navy, the Coast Survey, and the light-house service. Yet, the writer supposes "that this transfer was made without a passing remark."

The assertion that "as much work was done every year (during Mr. Hassler's superintendence) as there has been done since," taken in connection with a subsequent declaration, that the appropriation has been since increased, and the number of vessels, assistants, and officers, greatly augmented, is a direct charge that all the officers and vessels are idle; that the gentlemen of the army and navy, and the civil assistants employed on the Survey are in collusion with the Superintendent to deceive the government and the country. We trust it will not be thought unamiable in us to plead not guilty to this grave accusation, relying for proof on the table of statistics, which shows that much more work has been done in the last five years, than in the preceding ten years.

The statements made by the writer, in relation to the monthly reports, indicate, on this subject, also, a hypothetical delusion. They were, formerly, of no value, being merely put on file by a clerk of the Treasury Department, and regarded as inventories. Now these reports, sent to the Superintendent, who directs the progress of the work, furnish the means by which the operations of detached parties can be duly combined, the monthly progress of the work estimated, and the influences of climate, season, and local peculiarities, allowed for in every part of the Survey.

The monthly reports of results are not changed in their character. Monthly journals have been superadded of great value in combining the operations of different parties, and in showing the amount of working time which may be counted on in different localities, and for different operations. These monthly journals do not contain a single one of the particulars mentioned by the writer as to be obtained from them at the end of the year, but they do furnish the data for determining the conditions of the atmosphere, and other difficulties which obstruct the work in particular sections, and which the writer states were not taken into consideration; and they have, contrary to his *supposition*, been used for such purpose by the Superintendent in his annual reports, which contain full references to health, climate, and character of season.

The writer speaks of the permission to employ private computers as a *secret* abuse.

The permission here alluded to was given in the "directions" of the year, approved by the Secretary of the Treasury, and printed and circulated; and the names of persons thus employed are mentioned in the annual report of the Superintendent. This "official patronage" consists in the employment of computers, chosen by the authority of the Department from among men distinguished for their mathematical attainments, and has never amounted to more than $1,500 in any one year. The plan, so far from being censurable, is one which merits, and has received, high approval. It enables the Coast Survey to command the best mathematical talent of the country at comparatively a moderate compensation, and insures an accuracy which could hardly be otherwise attained.

The statement that a new bureau of accounts has been made of the Coast Survey office is quite a mistake, though certainly not meant unkindly. The First Auditor of the Treasury has always audited, and now audits, the Coast Survey accounts. The administrative examination of them by the Superintendent is similar to that made by the Chiefs of the Corps of Engineers, and of Topographical Engineers, and is an additional guaranty to that formerly existing.

The statement that but one-eighth of the coast of the United States has been surveyed, and that parties are engaged in, and have been sent to, either Mexico or California, is not altogether consistent with the real facts, at least twice that extent having been surveyed, and the despatch of any party whatsoever to Mexico or California never having been either made, or contemplated.

The writer believes that the salary of the present Superintendent is greater than that of his predecessor, and cites as his proof a mistake in the blue book of 1845, corrected in that of 1847, (it is only published once in two years,) which correction, of course, the writer never saw.

But in truth, (we do not mean to be sarcastic in the use of this word,) the annual compensation originally made to Mr. Hassler has been continued to the present day. From 1832 to 1836, there existed some difficulty about the allowance of fifteen hundred dollars of this sum. But the terms of the appropriation bill of 1836 were construed to authorize the payment of the sum held back, and it was given to Mr. Hassler.

His compensation to the close of his life was $6,000 per annum. The same rate has been continued, dollar for dollar, to the present Superintendent.

Of course, the writer has never had any means of informing himself of these facts. They appear, however, to be worth mentioning, if it be only for his own satisfaction.

And here we can, we believe, safely dismiss the writer. We do so with the utmost good nature; after his kind, and according to his very humble abilities, he has given us some help, and we thank him for it. "Truly, sir, the better for my foes," is the remark of the clown; and we begin to see that it has other applications than the particular one made by himself. To be sure, such service cost no trouble, "'tis as easy as lying;" and, moreover, it has the demerit of not being voluntary; but still, we are thankful for it, and we should be sorry to think that, by exposing the theoretical fancies and slight inaccuracies of fact into which the writer has been misled, we had done anything to injure his reputation. We feel confident, indeed, that no such injury can follow.

And what is the service which this writer has rendered to the Coast Sur-

vey? The good he has done, is to promote inquiry into the real condition and progress of the work, to make known its numerous friends, to elicit laudatory commendations of its principles and practice, and to spread abroad the knowledge of its usefulness and honor.

There is now a more confident assurance than ever, that its prosperity depends, not upon any fickle caprices of public favor, but upon an enlightened general opinion; that whilst it is conducted as at present, it will never want judges and advocates, able and willing to give it an efficient, steady, and intelligent encouragement and support. And for the good of the country, for the sake of true knowledge, for the cause of humanity, we rejoice that it is so.

"Grateful science" records with satisfaction the many years and many instances of honorable patronage which she has received from the Congress and government of the United States, never more conspicuous and beneficial than when conferred upon the Coast Survey. It is true she has suffered, in common with whatsoever is of good report, from the assaults of ignorance, prejudice, and self-interest. Like the benighted lady, she may have to encounter a thousand fantasies, and wily trains of evil, or be compelled, as now, to unlock her lips in the unhallowed air, to answer some juggler, "obtruding false rules pranked in reason's garb." But if she be faithful to herself, she has nothing to fear from these threatened dangers, because she ever walks attended by the strong-siding champion, Truth.

Whatever false enchanter endeavors to fetter her onward progress, will find his rod reversed, and his wand snatched from his grasp.

While she preserves her purity, she

> "May be assailed, but never hurt;
> Surprised by unjust force, but not enthralled;
> Yea! even that, which mischief meant most harm,
> Shall in the happy trial prove most glory."

141

U. S. C. & G. SURVEY
LIBRARY
AND
ARCHIVES
No.
Shelf
Case 526.0

Print from Hunt's Merchants Mag. Apr 1849

REMARKS

By an Assistant in the Coast Survey on an article in the February number of Hunt's Merchants' Magazine, "On the Survey of the Coast of the United States," (1849.)

In the last number of the "Merchants' Magazine," there has appeared an article on the Coast Survey of the United States, so plainly characterized by merely personal ill will towards the present Superintendent, and by a design on the part of the writer, actuated by this motive, to prejudice Congress against the work, and interrupt its progress, that it was at first thought perfectly safe, (as it would certainly have been most agreeable,) to leave the article to its own self-condemnation. The friends of the Coast Survey were persuaded that no apprehension need be felt of injury arising from such a source; that no impartial and discriminating judgment would suffer itself to be guided by assertions that were so palpably directed by individual resentment, or influenced by ridicule that descended below scurrility; that a great public undertaking like the Coast Survey, which in its conduct and its results has so often received the personal sanction of men of learning and of men of business throughout the country, and now enjoys the unqualified confidence and approbation of the Government, could not be injuriously affected by a paper that bore, in every lineament of its face, the marks of bad passion, of indifference to truth, and of a desire to destroy (*destruction* is the peculiar employment of bad, or misdirected intellects,) what is essentially good and useful, from motives of personal hostility.

But it has been suggested, on the other hand, that neither time nor opportunity is afforded to those who take part in the public councils to examine into the accuracy of statements involving statistics not within easy reach, or to arrive at an independent and deliberate opinion, (based on their own inquiries,) concerning matters embracing the theory and practice of surveying. In this respect, (it is said,) members of Congress are to be regarded as acting in a judicial capacity, and that here, as in courts of law, in cases into which the principles of a science, or the technical terms and details of an art are introduced, the necessary information must be derived from the examination of testimony which is both competent and true.

It is further considered, that even in a paper like the one referred to, where the bad temper of the writer is found upon inquiry to discredit his statements, still some inquiry is necessary to discover this defect, and that the "cunning livery" which untruth naturally assumes may readily deceive the candid and unsuspecting. And, finally, it is undoubtedly true, that in every public office, even the *appearance* of an unwillingness to encounter investigation should be carefully avoided, that it should not be left to the malice of an enemy to boast that silence (how-

ever justified by contempt) is to be attributed to a consciousness of error; and remembering that the malicious are always busy, that to arrest scandal in the threshold of its progress is the most prudent though perhaps the least agreeable course of action.

Our examination of the article must be brief. Every paragraph, we may safely assert, contains an untruth, a misstatement, or a false conclusion from the premises. We will take up the more important assertions as they occur; and, to begin with what the writer intends as a history of the Coast Survey, we have the following: "The law authorizing the survey of the coast was passed February 10, 1807. The words indicate distinctly, that it was intended chiefly for maritime purposes, and those of defence; and that a *geodetique operation*, such as was commenced under its authority, had not been contemplated or understood by the *Government*." Mr. Gallatin's letter to Mr. Hassler, (Transactions of the American Philosophical Society, N. S., vol. II,) which forms the first document of importance in the history of the Coast Survey, is dated March 25, 1807, and calls upon Mr. Hassler to furnish a plan for conducting a geodetic survey of the coast. In this letter the project and elementary basis of a geodetic survey are stated with as much clearness and specific distinction as they could be described at the present time.

The objects specified by Mr. Gallatin are, THE ASTRONOMICAL DETERMINATION OF CERTAIN POINTS, A TRIANGULATION TO CONNECT THOSE POINTS, AND A HYDROGRAPHIC SURVEY BASED UPON THIS TRIANGULATION.

The ordnance survey of Great Britain, and the topographical survey of France, both of them surveys conducted on geodetic principles, with hydrography attached, may be, or rather must be, described in the same language. It is, in fact, the language of science, and was, no doubt, carefully selected by Mr. Gallatin from the books, and designed to say that precisely such an operation as the one just carried on in France (the geodetic measurement of a degree of the Meridian for the double purpose of determining the figure of the earth, and at the same time a standard of measure, by Mechain and Delambre) should be repeated on the sea coast of this country, with the addition of hydrography.

Mr. Hassler's reply to Mr. Gallatin lays down, in detail, the plan of a trigonometrical or geodetic survey, and this plan is accepted by Mr. Gallatin. But the writer, in the next sentence, contradicts himself, when he informs the reader that Mr. Hassler was sent to Europe for instruments. The idea of sending to Europe for instruments to make a nautical survey is absurd. It is because this was to be a work of the highest class that science recognises, that is, *a geodetic survey*, that better instruments were to be procured abroad than this country afforded.

The writer next goes on to indulge in aspersions upon the officers of the army and navy not sustained by the premises, and contradicted by the facts. He charges them with a desire to break down the survey in 1818, and to get it into their own possession. In 1818, General Swift

and Colonel Abert, of the engineers, were Mr. Hassler's best friends and warmest supporters. Colonel Abert has always continued to be a friend of the Coast Survey; and it is well known that, during the difficulties in 1843, Mr. Hassler was deeply indebted to his support and influence for preserving his own position, and the established organization of the work.

With regard to the navy, it is only necessary, in order to show how scandalous is the charge of endeavoring, in 1818, to make the survey their peculiar property, to mention that Mr. Southard, Secretary of the Navy, in his report of 1827, was the first person in the Government to point out the disadvantage of disconnected surveys; and that afterwards, in a letter to Mr. Hoffman, chairman of the Committee on Naval Affairs, dated April 14, 1828, (Doc. 264, Ho. of Reps.,) he urged the revival of the old law establishing the Coast Survey.

The writer also attacks the American Philosophical Society, and charges it with delay and disrespect in the publication of Mr. Hassler's papers. By referring to the Transactions themselves, it will be seen that Mr. Hassler's papers occupy their place in regular order, with the exception of one short intervening article; and the precedence given to this last was owing, no doubt, to the unavoidable delay in preparing the engravings accompanying Mr. Hassler's papers.

Neither is it true that the American Philosophical Transactions constituted the only scientific journal then in existence. Silliman's Journal was published at that time; and the Memoirs of the American Academy, in Boston, made a scientific journal as much as the Transactions of the Philosophical Society. We only notice these things as being indicative of the writer's trustworthiness.

The historical relation which follows, concerning the standards of weights and measures, is incomplete and inaccurate. The subject of standard weights and measures was first brought forward by Mr. Jefferson in 1790. (See Ex. Docs. of that year.) It was subsequently introduced by Mr. Izzard, in 1791; by Mr. Jefferson again, 1795; by Mr. Harrison, in 1796; by Mr. Lowndes, in 1819; and by Mr. Adams, (Secretary of State,) in 1822. The part taken by each of these distinguished statesmen, in a measure of the highest practical utility, such as commanded the attention of every nation at all advanced in political economy, is entitled to a place in history.

The writer next speaks of the gradual increase of the survey under Mr. Hassler without comment; but he makes the gradual increase under Mr. Bache, the present Superintendent, as we shall see hereafter, an occasion for attack. It is no part of our design to undervalue the labors of Mr. Hassler; but the writer, in order to disparage Mr. Bache, has given him credit such as Mr. Hassler himself did not claim. The main triangulation, at the time of Mr. Hassler's death, was only regarded by him as extending from the base line on Fire Island beach to below Philadelphia, and not, as is stated, to Point Judith. The triangulation from near New York to Point Judith, executed by Mr. Blunt, one of the principal assistants, was re-

garded by Mr. Hassler only as a secondary triangulation, and was adopted as a main triangulation by Mr. Bache himself after the measurement of a base of verification in Rhode Island.

The writer asserts, that, "four sheets of the large maps of New York bay and harbor were finished, and the reduced sheets of New York bay and Long Island were ready for the engraver, as well as the whole of Delaware bay," "during the period of Mr. Hassler's superintendence."

This is all simply untrue. One sheet only of the four was finished by Mr. Hassler. The others had been commenced, but were delayed after Mr. Hassler's death, by the necessity for making important additions to the hydrography, which occupied a whole working season. The reduced sheets of Long Island were *not* ready for the engraver. The project for the map of Delaware bay, the reduction of the whole land work, and of a part of the hydrographical work, were made under the present Superintendent. Very extensive and important additions have been made to the hydrography of Long Island sound, and some additions to the hydrography of Delaware bay.

The name of the present Superintendent does *not* occur in the title of the New York chart, but is merely placed in connexion with the work actually executed under his direction, and for which he is therefore responsible.

It is not true, as is said by the writer, that the soundings had been carried far enough to sea for the purpose of navigation, in 1843. The weights and measures intended for the custom houses had *not*, as he asserts, been completed; and as to the hope of procuring copies of the English standards not being realized, as he says, the writer discovers his ignorance, in not knowing that the British standards have not yet been made. The *equipment* of the naval parties is paid from the *Coast Survey* appropriation, and not from that of the *Navy*, as the writer assumes.

The statements in regard to the compensation of the former and present Superintendent are false. At no time has Mr. Bache received a higher salary than Mr. Hassler received from 1832 to the time of his death.

The statements of the writer concerning the transfer of some of the revenue steam vessels to the Coast Survey are also false. Captain Alex. V. Frazer, late chief of the bureau of the revenue marine, in his *annual report for* 1847, recommended the abandonment of the use of steam in that branch of the public service, estimating the saving to be thereby effected at between three and four hundred thousand dollars. One of these vessels having been put up for sale in New Orleans, the single bid of three thousand dollars was made for her. She cost one hundred and twenty thousand dollars. After this vain attempt to dispose of these vessels, Capt. Frazer recommended in the same *annual report*, that, in order to prevent this *melancholy* sacrifice of public property, they should be transerred to the Navy, the Coast Survey, and the light-house service. Yet, the writer asserts, "that this transfer was made without a passing remark."

The assertion that "as much work was done every year (during Mr. Hassler's superintendence) as there has ever been done since," taken in connexion with a subsequent declaration, that the appropriation has been since increased, and the number of vessels, assistants, and officers greatly augmented, is either the self-contradiction and inconsistency of a man who, careless of his statements, forgets on one page what he has said on the preceding, or it is a direct charge that all the officers and vessels are idle, that the gentlemen of the army and navy, and the civil assistants employed on the Survey are in collusion with the Superintendent to deceive the Government and the country; such a charge will hardly receive credit coming from any source, especially from one so impure as this.

The disposition and temper of the writer is shown in his manner of speaking of Professor Bache. We take this opportunity to mention, that the nomination of Professor Bache to the office of Superintendent of the Coast Survey was made by all the leading scientific societies and institutions of learning in the country. We set the authority of these open nominations against that of a concealed defamer, and we invite respectable gentlemen, (excluding, of course, the writer from this class,) to consider that such indecent language, when applied to a man distinguished for his services to the cause of science, and holding an eminent social position, should have no other effect than to excite disgust towards the individual by whom it is used.

The statements made by the writer, in relation to the monthly reports, are false. They were, formerly, of no value, being merely put on file by a clerk of the Treasury Department, and regarded as inventories. Now these reports, sent to the Superintendent, who directs the progress of the work, furnish the means by which the operations of detached parties can be duly combined, the monthly progress of the work estimated, and the influences of climate, season, and local peculiarities, allowed for in every part of the survey.

The writer speaks of the permission to employ private computers as an abuse, and makes false assertions concerning it.

The permission here alluded to was given in the "directions" of the year, approved by the Secretary of the Treasury, and printed and circulated; and the names of persons thus employed are mentioned in the annual report of the Superintendent. This "official patronage" consists in the employment of computers, chosen by the authority of the Department from among men distinguished for their mathematical attainments, and has never amounted to more than $1,500 in any one year. The plan, so far from being censurable, is one which merits and has received high approval. It enables the coast survey to command the best mathematical talent of the country at comparatively a moderate compensation, and insures an accuracy which could hardly be otherwise attained.

The statement that a new bureau of accounts has been made of the Coast Survey office is false. The First Auditor of the Treasury has always audited, and now audits, the Coast Survey accounts. The ad-

ministrative examination of them by the Superintendent is similar to that made by the chief of the Corps of Engineers, and of Topographical Engineers, and is an additional guaranty to that formerly existing.

Equally false is the statement that but one-eighth of the coast of the United States has been surveyed, and that parties are engaged in, and have been sent to, either Mexico or California.

The next paragraph is fairly characteristic of the whole article, and of the writer's mind. It is difficult to say whether it displays falsehood or malice in excess, or whether, of the falsehoods, those that are literal misstatements, or those that are ingenious perversions, are the most offensive.

"In taking the field in 1844, the Superintendent assumed the northern portion of the Survey, which had been carried to Point Judith by his predecessor, under the immediate charge of one of the principal assistants. The accuracy of the work thus far had been verified by the last line of the triangulation, agreeing, within a very small limit, (a fraction of a foot,) with the same line of Mr. Borden's triangulation, made for the survey of Massachusetts, and depending on another base.* In taking this part of the field, instead of leaving it to the assistant, who had so honorably and judiciously managed the preceding and more difficult part of the operation, the Superintendent not only secured himself an easy and healthy country to operate in, but he had before him the points already established by Mr. Borden, each marked with a monument. He had also Mr. Borden's results to compare always with such as he might derive himself; and, moreover, he had with him one of Mr. Borden's assistants, who knew the country, and thus spared him any trouble of reconnoisance. Indeed, it is known that an attempt made by this assistant to change a principal line of Borden's triangulation, though made at great expense and loss of time, altogether failed; thus showing clearly the ability with which the points of the previous triangulation had been selected. The Superintendent, in the four years of his personal field work, has scarce yet passed the limit in which Mr. Borden had preceded him; and if it be ever judicious in such matters to raise questions of economy, it might be well worth asking whether the work done in the field by the present Superintendent, at immense expense, has been necessary at all.† To the assistants were assigned the more southern portions of the work, and two bases of verification, near the extremities of the triangulation which had been furnished by Mr. Hassler, were measured by them in 1844".—Pp. 140-'1.

When the present Superintendent came upon the survey, he found the first section of the work nearly completed, and he thought he would best meet the views and wishes of Mr. Hassler's friends by assigning to his principal assistants the closing up of that part of the work which had been commenced, and mainly performed, under Mr. Hassler's direction. Accordingly, one of the two principal assistants was sent to the Chesapeake to measure a base of verification, and connect it with Mr. Hassler's main triangulation; whilst the other one measured a base of verification on the eastern end of the work, and reconstructed the northern part of the main triangulation (which was necessary) in Delaware bay. On taking up the main triangulation on the north, to begin a new section of the work, Mr. Bache only assumed his proper place as the head of the survey. The scheme of this main triangulation differed, essentially and necessarily, from that of Mr. Borden; and

* This close agreement of Mr. Blunt's with Mr. Borden's work is nowhere spoken of in the Coast Survey reports; nor is there a single atom of credit given to Mr. Borden, though it is said that he was one of the applicants for the superintendence, and withdrew his claim in Dr. Bache's favor.

† At the stations of the main triangulation, under the present superintendence, there are usually thirty tents, with the corresponding equipage.

of 16 stations occupied at the north by Mr. Bache, only five were identical with those used by Mr. Borden. Mr. Bache did not compare his results with those of Mr. Borden; the means and instruments of the latter were so far inferior to those of the Coast Survey that such comparison was not desirable. The statement of an attempt to change a principal line of Mr. Borden is untrue.

The Superintendent has passed far beyond the limits of Mr. Borden's triangulation, into the States of Maine and New Hampshire. It is implied in the extract that this comprises the whole personal field work of the Superintendent. So far is this from being the case, that Mr. Bache has measured two bases—one on Dauphin island, (Alabama Coast of the Gulf of Mexico,) and one on Bodie's island, (N. Carolina,) besides connecting the Chesapeake with Washington by triangulation—for the determination of the first meridian, and as a check on the secondary triangulation of the Potomac.

The ad captandum note about the tents is simply false, without the merit of ingenuity to screen it.

The next paragraph abounds in untruths. It is untrue that the monthly reports of results were changed in their character. Monthly journals were superadded of great value in combining the operations of different parties, and in showing the amount of working time which may be counted on in different localities, and for different operations. These monthly journals do not contain a single one of the particulars mentioned by the writer as to be obtained from them at the end of the year, but they do furnish the data for determining the conditions of the atmosphere, and other difficulties which obstruct the work in particular sections, and which the writer states were not taken into consideration, and have, contrary to his assertion, been used for such purpose by the Superintendent in his annual reports, which contain full references to health, climate, and character of season.

This passage characterizes the writer, or at least one of the principal contributors to the composition of this paper.

The details given in the note could only have been furnished by a person formerly an assistant in the Coast Survey, and since dismissed from it under circumstances which establish his moral incompetency as a witness to its character.

This person was found guilty, before a distinguished commission, of rejecting some of his observations and retaining others, "*because they differed from or approximated to a mean or desired result.*" "*And this objectionable method of arbitrary selection was in some cases carried to such an extent that the same observations were used to correct, in making up one set of results, which were rejected as erroneous in making up another set.*"

Here we might take leave of the writer, and of the article. It is difficult to imagine that any person, whose mind is either impartial or regardful of the truth, should be imposed upon by imputations against the personal honor and official integrity of gentlemen of respectability, coming from such a source.

But having advanced so far in the examination of this paper, it may be as well to continue the exposure of its real character to the end.

The following paragraph is, perhaps, the fairest specimen that could be taken of the merit of the article. Every line and statement in it are untrue or malicious, or more frequently both. Ex pede Herculem.

"If the five years' work of the present Superintendent, with a *personnel* at least twice as large as the largest ever employed under the previous superintendence—an appropriation more than eight times greater than that with which the work began, and nearly twice as large as that with which the former superintendence closed—and with vessels and equipages furnished by the Revenue bureau of the Treasury Department, to the amount of $240,000, be compared with the eleven years' work done by his predecessor, it will be seen, even using the Superintendent's arithmetical process, that there is but little difference in the proportional quantities of work done. I exclude from this all comparison of the area of the primary triangulation. The re-occupation of Borden's triangulation put the Superintendent at once in the possession of triangles with sides of from eighteen to seventy miles in length, and superficial miles by the thousand were covered with more ease than hundreds in any other portion of the Survey."

1. The first two lines are wholly untrue. A reference to the table hereinafter given will prove this conclusively. In every case, except the topography, which has been judiciously curtailed by diminishing the distance inland to which the work is carried, and increasing the accuracy of the portions surveyed, more work has been done in five years than in the preceding twelve. The number of assistants has *not* been doubled. The appropriation has *not* been for the five years nearly double that with which the previous superintendence closed. No equipages have been transferred from the Revenue bureau, and no vessel of that department was used, until 1847.

The writer excludes from his calculation the most important part of Mr. Bache's work—the most important in extent and valuable in results. In this part of the work it is strictly accurate to say, that the astronomical observations alone, (which are but a single branch of the primary field work,) greatly exceed in number and intrinsic value *all* the observations of the same kind made by Mr. Hassler during the *whole eleven years* that he had charge of the work in active operation.

In this connection it should be mentioned that the present Superintendent has in five years occupied as many primary stations, and measured twice as many bases, as the former Superintendent in twelve years.

The "outer and more dangerous coast," which the writer says "has not been touched," has been surveyed to the extent of 28 miles *south of Cape Henlopen*.

Great credit is due to Mr. Bache for commencing the work of North Carolina, with this very object of including the coast north of Hatteras. This is one of the conspicuous merits of his new system of operations, that such work can be begun separately, the final union with the other sections being deferred for the present. The survey is rapidly advancing to Cape Hatteras.

The error in the geographical position of Galveston, which Professor Bache has prepared to correct, has no doubt existed. The shame and danger of it belong to our forefathers, or to the Spaniards; it is highly

to the credit of Prof. Bache that the Coast Survey moved into Texas in two years after the annexation, (it had no right to go there before,) for the very purpose of correcting these errors.

The writer next engages in an argument, purporting to be based on statistics, to show that not as much work has been done under Professor Bache's administration as was accomplished by Mr. Hassler; which sums up, however, with the very favorable admission, that the primary triangulation under Mr. Hassler's superintendence "covered a superficies of about 5,760 miles," while "the superficial miles of primary triangulation made by the present Superintendent up to 1847 will, by his estimates, amount to 7,803." This is certainly sufficiently complimentary to the industry of Professor Bache, when it is considered that Mr. Hassler's superintendence continued twelve years, while that of Mr. Bache, up to 1848, only reaches a term of four years. But he endeavors, as before, to discredit the utility of Professor Bache's work, by saying that it had been anticipated by Mr. Borden in the trigonometrical survey of Massachusetts. This untruth has been previously noticed. As the writer has appended to his statement a summary in a tabular form, and has forced this comparison, a *correct* table is given below, in which the real quantity of work done under the superintendence of Mr. Hassler (a term of twelve years) is compared with that of Professor Bache, (for a term of five years,) in every variety of form in which it can be estimated. It may be noticed as an example of the very singular disregard for truth, even where the misstatement is so palpable as to save the trouble of contradiction, that the writer in this part of his article speaks of the alluvial shores of the south part of Massachusetts as "bold and rugged coasts," "rock-bound shores," and contrasts them, in this respect, with the sunken and sandy beaches of the South, of which, in fact, they are the very type.

Results of the Coast Survey at different periods from 1807 *to* 1849.

	From 1807—1819	From 1832—1844	From 1844—1849	Total.
Reconnoisance, area in square miles	560	18,103	22,544	41,207
Triangulation	450	14,483	19,309	34,242
Extent of coast line	.....	310	405	715
Extent of shore line, including bays, sounds, &c.	.....	3,215	4,211	7,426
Astronomical stations, number of	3	11	47	61
Magnetic stations	0	10	88	98
Vertical angles stations	0	7	34	41
Base lines, number of	0	1	4	5
Preliminary base lines, number of	2	0	3	5
Topography, area of, in square miles	0	6,222	2,755	8,977
Length of shore line	0	6,100	4,055	10,155
Hydrography, area of, in square miles	0	*9,623	†15,086	24,709
Hydrography, number of soundings	0	808,147	950,202	1,758,349
Gulf stream, soundings, number of	0	0	1,410	1,410
Gulf stream, fathoms of line	0	0	139,747	139,747
Current stations, number of	0	0	160	160
Tidal stations	0	13	40	53
Specimens of bottom, number of	0	500	4,098	4,598
Total number of manuscript maps	0	326	295	‡621
Of these manuscript maps, No. prepared in office, being reductions, &c.	0	29	123	152
Original topographical maps, No. of	0	160	100	‖260
Containing sheets, No. of	0	298	131	429
Original hydrographical sheets, No. of	0	103	72	§175
Duplicate hydrographical sheets, No. of	0	34	0	34
Containing sheets, No. of	0	236	160	396
Records triangulation, bases, &c., No. of volumes	4	95	233	332
Astronomical obs., &c., No. of vols	1	16	138	155
Computations, geodetic, No. of vols	1	78	138	217
Computations, astronomical, No. of vols	2	4	138	144
Magnetic observations, No. of vols	0	4	37	41
Magnetic computations, No. of vols	0	0	15	15
Geodetic books, duplicates, No. of vols	1	26	128	155
Meteorological books, No. of vols	0	2	7	9
Meteorological books, duplicates, No of volumes	0	0	3	3
Original hydrographical books, soundings, and angles, No. of vols	0	179	380	559
Duplicate hydrographical books, soundings, angles, No. of vols	0	27	32	59
Hydrographic books, tidal and current obs. and tidal reductions, No. of vols	0	8	158	166
Astronomical differences of longitude	0	0	66	66
Total of records	9	439	1,373	1,928
Engraved plates of maps, number of	0	5	24	29
Engraved plates of maps electrotyped, No.	0	0	8	8
Published maps, number of	0	0	21	21
Printed sheets of maps, number of	0	0	24,249	24,249
Printed sheets of maps distributed, No. of.	0	0	7,678	7,678
Printed sheets of maps, sale agent, No. of.	0	0	12,979	12,979
Volumes in the library	.....	.....	.....	655
Instruments, value of	.....	.....	.....	$149,513

* 5,000 of off-shore work. † 11,000 of off-shore work. ‡ 11,215 square feet of paper.
‖ 4,056 square feet of paper. § 5,891 square feet of paper.

The writer endeavors to make it appear that it is a fault in Professor Bache to have instituted re-surveys, even where he knew that the old surveys were actually in error. This is so characteristic of a person dismissed from the scientific service of the Government for *cooking* (to use the technical phrase) his own observations, that it must not be permitted to pass without this word of comment.

The writer also, on the same page, declares that the field maps and sheets of reduction of Delaware and Long Island were erroneous; that the correction of the errors "has more than doubled the expense of the charts, and delayed for about two years their publication," and that this was the crime of an assistant, who at that time held the fifth place, and has since then been promoted, and now occupies the second place on the survey. Now the errors, such as are imputed, never existed; the pretended expense and delay in consequence of them were never incurred; and the assistant referred to was promoted for distinguished merit in the field in a southern section of the survey, (Alabama, Mississippi, and Louisiana,) into which he was the first to carry its operations.

The writer, in this paragraph, asserts that "other assistants have been removed," or displaced. Now, but one assistant has been removed during the superintendence of Professor Bache, and he for causes already stated, and after trial before a scientific commission, consisting of Professor Pierce, of the University at Cambridge, (selected by Professor Bache on the part of the Treasury Department,) of Capt. Talcott, late of the U. S. Corps of Engineers, (selected by Mr. Ferguson,) and of Professor Davies, late of the West Point Academy, (selected by Professor Pierce and Capt. Talcott,) the decision of which commission was signed by all the members, and approved by the Secretary of the Treasury.

And it should be enough to know that the materials of this paper were furnished, and most probably the paper itself written, by this person. Its character harmonizes with its origin. It is incorrect in its statements, perverted in its reasonings, and destructive in its designs.

APPENDIX.

Mr. Bache has been charged by the writer with procuring, by improper means, the removal of the old assistants from the survey. But one assistant has been dismissed, as we have before stated, during Mr. Bache's superintendence.

The circumstances under which it became necessary for the Secretary of the Treasury to dismiss him are explained by the "Report" of the scientific commission appointed to examine the complaints against him.

These complaints, it must be understood, originated with one of the computers who re-examines the calculations made in the field. By this system of double computation and mutual correction, errors are prevented and gross defects (where they exist) are detected.

The following is the "Report:"

REPORT

Of a commission appointed to examine the Triangulation of Mr. James Ferguson, Assistant U. S. Coast Survey, upon the Coast of the United States, during the years 1844–'45.

COAST SURVEY OFFICE,
WASHINGTON, *March* 1, 1847.

To the Hon. R. J. Walker, Secretary of the Treasury, the commission for examining the triangulation of Mr. James Ferguson upon the coast of the United States, during the years 1844–'45, has the honor of submitting the following report:

The Board has fully and freely examined the records of the observations made by Mr. James Ferguson in 1844 and 1845, for the primary triangulation from the verification base on Kent island, to the junction with Mr. Hassler's triangulation, and the books of results of the same; also the computation of sides, the reports of Mr. Werner, of Lieut. Humphreys, and of Mr. Ferguson, to the Department; and also another document, viz., the reply of Mr. Ferguson to the Superintendent's report. After mature deliberation and consultation, the Board has arrived at the following conclusions upon the points submitted to their decision:

I. The character of the work as presented by Mr. Ferguson's report.

The Board decides that the primary triangulation from Kent Island base to the junction with Mr. Hassler's triangulation, as exhibited in the results reported by Mr. Ferguson on completing the work, appears good, and that the reported verification of Mr. Hassler's work was satisfactory.

II. The real character of the work.

The Board decides that the work is not really good, but that it is in part defective and uncertain in its results, because—

First. At several of the stations the observations were not sufficient-

ly numerous, especially as the observer appears to have distrusted his instrument.

Secondly. The sum of the three angles of several of the triangles, as deduced from all the observations, differs from its correct value, which is 180 degrees, increased by the spherical excess by more than three seconds, which is now and has justly been regarded as the maximum limit of error admissible upon the primary triangulation.

Thirdly. There are frequent uncertainties of reading, which amount, in some cases, to a minute of arc.

And the Board further decides that the work, which is vitiated by such defects and uncertainties, should not be received as a portion of a final primary triangulation and work of verification in the survey of the coast of the United States.

The Board has no knowledge that there were any reports of uncertainties in the work finally presented to the Superintendent prior to those of Mr. Werner and Lieutenant Humphreys.

III. The modes of obtaining from the observations the reported results.

The Board decides that methods were used by Mr. Ferguson which are incorrect in principle, in obtaining the reported results from his observations; and that the apparent satisfactory closing of the triangles was due in part to the use of such methods.

The most important error in the mode of obtaining the reported results consisted in neglecting to use all the observations made under circumstances equally favorable, and allow them equal weights; and in rejecting some and retaining others, because they differed from or approximated to a desired or mean result. This objectionable method of arbitrary selection was in some cases carried to such an extent, that the same observations were used to correct in making up one set of results, which were rejected as erroneous in making up another set.

The Board has further examined the books containing the azimuth observations made at Finley, in connexion with the triangulation, and the different computations of them.

The opinion of the Board is, that these azimuths should not be taken as final results, on account of the astronomical object upon which the observations were made, and the mutual discrepancy of the results.

There were also submitted to the Board, at a late hour of their deliberations, two other documents, viz., the letter of Mr. Bache of the 25th of February, and the reply of Mr. Ferguson of the 27th. The Board, believing that the commentaries of these gentlemen could not affect the final judgment which has been made upon the recorded facts of the case, has given no weight to these communications in making up their final opinion.

All which, together with the Journal of Proceedings of the Board, is submitted by, Very respectfully, your obedient servants,

(Signed) BENJAMIN PEIRCE,
ANDREW TALCOTT,
CHARLES DAVIES.

J. & S. G. Gideon, printers.

1.54

SPEECH

OF

MR. J. A. PEARCE, OF MARYLAND,

ON THE SUBJECT OF

THE COAST SURVEY OF THE UNITED STATES.

DELIVERED IN THE SENATE OF THE U. S., ON SATURDAY, FEB. 17, 1849.

WASHINGTON:
J. & G. S. GIDEON, PRINTERS.
1849.

Blank page retained for pagination

SPEECH.

The Senate, as in Committee of the Whole, having proceeded to the consideration of the bill making appropriations for the civil and diplomatic expenses of the Government for the year ending June 30, 1850—

Mr. BENTON moved to strike out the clause appropriating $186,000 for defraying the expenses of the Coast Survey, including compensation to the superintendent and his assistants, and to insert in lieu thereof the following:

"For survey of the coast of the United States, the sum of $30,000; and from and after the 30th day of June, 1849, the said survey shall be carried on exclusively by the Navy Department, under the direction of the President of the United States."

Mr. BENTON having addressed the Senate in support of his amendment—

Mr. PEARCE said—

Mr. PRESIDENT: I differ widely from the Senator from Missouri. My views are altogether different from those which he has just presented. I believe that the United States Coast Survey, as it is now organized, as it is now carried on, has not grown up in defiance of any act of Congress. I believe it is in strict conformity with the original act of Congress authorizing the commencement of the Coast Survey, and with the subsequent act authorizing its continuance; strictly in conformity with the objects of that survey, as described generally in the laws authorizing it, and with the special objects which were left by those laws at the discretion of the President; strictly in conformity, not only with the interests of science, but with the great interests of commerce and navigation.

Sir, this work was due, not only to science, but to ourselves; due to that commerce which pours into our treasury nine-tenths of all its revenue, which you distribute in a thousand channels throughout the land; due to the navigation which conducts that commerce, and which furnishes us with the very best defences our country can have against foreign aggression. We know that the security of all the property invested in foreign commerce, and our coastwise commerce too, depends upon the accuracy with which that work is performed. We know that the lives of our mariners, who are constantly engaged in the most perilous of all occupations, likewise depend upon the accuracy with which that work is accomplished. And I believe that this work has been so conducted, that, while it has been in strict conformity with the law, it has advanced, in the very highest degree, the interests of commerce and navigation. Let us look at the law, and see whether it is so very limited in its object as the Senator from Missouri supposes. I find that the act of 1807 reads as follows:

"*Be it enacted, &c.*, That the President of the United States shall be and he is hereby authorized and requested to cause a survey to be taken of the coast of the United States, in which shall be designated the islands and shoals, with the roads or places of anchorage, within twenty leagues of any part of the shore of the United States; and also the respective courses and distances between the principal capes or headlands, together with *such other matters* as he may deem proper for completing an accurate chart of every part of the coast within the extent aforesaid."

This is the general designation of the objects of this survey. It is not limited to pointing out the islands and shoals which may exist within twenty leagues of the coast. It is not confined to the mere ascertainment of the principal capes and headlands, but it embraces all such other matters as the President, in his large discretion, may think should come within the proper scope of such a survey as this.

Again, by the third section of the act of 1807, the President was "authorized and requested to cause proper and intelligent persons to be employed to carry out any of the purposes of the act." He was not limited as to the number of persons to be employed. He was not restricted as to the character of the individuals, or the nature of their professions or pursuits. It mattered not whether they were astronomers, engineers, or otherwise. But, in the express language of the act, he is "authorized and requested, for any of the purposes aforesaid, to cause proper and intelligent persons to be employed, and also such public vessels in actual service as he may judge expedient, and to give such instructions for regulating their conduct as to him may appear proper, according to the tenor of this act." So much for the scope of that law as to the employment of persons to carry on this work.

But further: The act of 1832 revives the act of 1807, and authorizes the President of the United States, "in and about the execution of the said act, to use all maps, charts, books, instruments, and apparatus which now or hereafter may belong to the United States, and employ all persons in the land or naval service of the United States, and such *astronomers* and *other persons* as he shall deem proper."

The Senate will perceive that the very largest discretion is given to the President in regard to this matter, and it was rightly given. It would not have been proper for Congress to lay down the details of a plan for observations so delicate and so complicated as those necessary to the survey of the coast of the United States. That was wisely and properly left to the discretion of the President. And the President, in the exercise of that discretion, began by directing the Secretary of the Treasury to acquire the information necessary to the successful prosecution of the survey, and to consult highly distinguished scientific men throughout the country as to the plan upon which this important undertaking was to be pursued. The Secretary did so, and adopted the plan of a geodetic survey submitted by Mr. Hassler, subsequently sending him abroad to procure instruments for executing the work. This done, Mr. Hassler, when ready to commence the survey in 1816, was employed to conduct its operations under the designation of "superintendent." And, sir, the President departed from neither the letter nor the spirit of any law when he appointed a superintendent of the Coast Survey. A work of such import-

ance, magnitude, and delicacy, and of such a complicated character, could not have been conducted in any manner, much less conducted properly, unless under the supervision of one intelligent head, and that intelligent head must needs be "superintendent," no matter by what name designated. And Congress have recognised the propriety of this designation by their legislation. It is now a common term in the legislation of the country. And the term "Superintendent of the Coast Survey" has not "stolen" into the language of our statute books. It was brought in openly, properly, intelligently, and it would have been rather a matter of surprise than otherwise if that word had not been used by the Executive and by Congress too.

The act of Congress of March 3d, 1843, directed the reorganization of the mode of executing the survey, upon a plan to be recommended by a board designated in the law. This plan of reorganization was completed, according to the provisions of the law, before Mr. Bache became Superintendent; was submitted to and approved of by the President, and has furnished the general rules for the conduct of the survey; referring to the department charged with the survey, the employment of the civilians engaged on them, the pay to be allowed them, and providing that vacancies occurring thereafter, in the scientific department of the survey, should be supplied from the army and the navy, accordingly as the operations were upon land or water.

The Senator from Missouri seems to suppose that the sole object of the Coast Survey was what may be termed hydrographical, and he seems to think that, because such was its supposed object, the whole work comes peculiarly and solely within the province of the navy. Sir, I do not so understand it. I apprehend that the Congress which passed this law must have understood the general principles upon which great works like this have always been regulated in other countries. The letter of Mr. Gallatin to the individuals whom he consulted as to the plan for the Coast Survey, shows that he knew perfectly well what the language of science was upon this subject, and that in framing this plan, which has been carried out, and not departed from that day up to the present time, he was following out those rules which scientific men, acquainted with the subject, had decided to be the best for conducting such an operation.

Mr. President, the primary object of the Coast Survey is to make an accurate map on which shall be delineated the whole coast of the United States—not the principal capes and head-lands only, but the whole coast, with all its indentations and sinuosities, including those objects, whether on the shore or off the shore, the knowledge of which may be of any sort of value to navigation. This is a work which cannot be done either by ordinary land surveying or by ordinary off-shore surveying. It is a work of the highest science. It requires the very best ability, the most complete and refined observations, the

use of the most delicate instruments, the nicest and most complex calculations—astronomical as well as ordinary trigonometrical calculations. The processes by which the latitude and longitude of any point on the earth's surface are calculated are the very nicest of all the processes known to science—processes, perhaps, not perfectly completed at this day. And I may say of the Coast Survey under Mr. Bache—as indeed when under Mr. Hassler—that it has not only kept up with all the inventions and improvements of science in other countries, but it has surpassed them. The learned and able gentlemen engaged in prosecuting this work have made discoveries of their own, have invented new instruments, new processes, by which more precise results are arrived at in the various scientific calculations connected with their undertaking; and many of their inventions and discoveries have attracted the notice and won the admiration of the scientific world, and will render our country illustrious for all time. To delineate accurately the coast of the United States, according to the opinion of all scientific and practical men, requires, as I have said, the highest scientific and practical abilities; for this, though a practical, is not a plain business, as the Senator from Missouri assumes. It is not a business which can be performed by every officer of the navy, or by one-tenth, or by one-twentieth part of the officers of the navy, if I know any thing of their abilities for such a work. I know many of them who are no more competent to perform this work than I am myself, and I am utterly incompetent. I know very few naval officers who are competent for this business, and those few have been trained and rendered competent by their labors in this service, under the present accomplished and efficient Superintendent of the Coast Survey and his learned predecessor. The profession of the naval officer does not require the profound scientific education which these duties demand, and that period of life usually devoted to such studies is passed by them in acquiring *nautical* knowledge. From sixteen to twenty-two, when the foundation of this knowledge is laid with all professional men, they are commonly on the ocean, without the means of, or the leisure for, this scientific training. Therefore, though there are many gallant and generally intelligent men among our naval officers, it is not to be wondered at that they do not furnish the kind or degree of acquirement requisite for the higher operations of the Coast Survey. There are some brilliant exceptions to this general rule, but they are only exceptions.

In the army there is necessarily more mathematical and astronomical science, and it has been availed of in the Coast Survey, which, indeed, has been a capital school for the further improvement of our young officers.

In relation to the navy, as well as the army, I may say, that they have not been idle, even since the war with Mexico has been brought to a close. Large and increasing demands are made upon them for the protection of our commerce in every part of the world; and I think that the leisure allowed them is

nothing more than a reasonable relief from the common hardships and perils of their profession.

There are very few whose attention has been drawn to the operations of this survey, and perhaps it may be well to give some explanation of the process.

The operation begins with a series of *triangulations*, so called, by fixing upon a number of prominent points on the coast, some of them at large distances, and connecting these points by trigonometrical operations upon a large scale. It is then necessary to include in the first another series of secondary and tertiary triangles, correcting and verifying the whole by astronomical observations of the greatest nicety.

The Senator from Missouri seems to suppose that the Superintendent of the Coast Survey has violated the law by establishing an observatory for the purpose of making astronomical observations. Not at all. Every astronomical observation that has been made by the Superintendent has been necessary for the determination of the latitude and longitude of places or points of the survey which it was requisite to have fixed and precisely known. Sir, I scarcely think it needful to give the Senate any authority for these statements, but I can easily do so. I will read a paragraph from an article in the "Princeton Review," written by Professor Henry, one of the most distinguished savans of this or any other country:

"Connected with the primary triangulation a series of astronomical observations are made for ascertaining the latitude and longitude of the principal points, the result of which may serve to check the triangulation, and establish on the chart the parallels of latitude and meridians of longitude. Such a survey is susceptible of great accuracy, and possesses within itself the data for its own verification." "It might appear at first sight that the process here described is one of no great difficulty of execution, and that it may be safely trusted to men of ordinary scientific acquirements, &c., but nothing can be further from the truth."

Sir, a minute error in your base line—a small mistake in any of your primary observations—propagates and multiplies itself throughout the whole extent of a work of this sort.

So that the astronomical observations which it has been supposed might convert the Coast Survey into a permanent national observatory, are nothing more than the necessary instruments for giving precision and value to the result of the surveys made in the prosecution of this work. This is well known. It is the practice in every civilized country under heaven, where any attempt has been made to execute a grand work like this. The great survey of England is both trigonometrical and astronomical. So is the great survey of France. So are those of Wurtemburg, of Prussia, of Russia, of Italy, and other countries, many of which have been executed with extraordinary fidelity and accuracy, but not one of which is superior, in any respect, to that in which we are now engaged. We have improved upon their means in some particulars, and our surveys are inferior in accuracy, completeness of detail, and economy of performance, to none in the world. A National Observatory has grown up here since the passage of the act of 1832, but it has grown up under different aus-

pices from those of the Coast Survey. It has been legally established by an act of Congress, by the co-operation of the two branches of the Legislative and Executive, and it has no connexion with the Coast Survey. If, at any time, an observation has been made at the National Observatory for the benefit of the Coast Survey, it has been but a proper and incidental contribution from that establishment towards the accomplishment of this great national work. Sir, I venture to say that it never entered the mind of Mr. Bache or Mr. Hassler that, in prosecuting those observations absolutely necessary to the success of the undertaking in which they were engaged, they were running in conflict with any act of Congress requiring that the Coast Survey should not establish a permanent astronomical observatory. The Superintendent of the Coast Survey would have been disgraced as a scientific man, and a faithless public servant, if he had omitted to give accuracy, precision, and value to his work, by such indispensable and well known means as are and must be employed in all works of this character.

But, to return to the manner in which these operations are conducted. After the main triangulations and the secondary and tertiary triangulations, comes the topography, which delineates the country for a few miles inland. Mr. Hassler carried it much further inland than Mr. Bache has done. That was partly owing, however, to the fact of the great difference in the character of the country upon which the two officers were engaged. Mr. Hassler was occupied chiefly with the hilly regions of the North, where there were many prominent natural objects, far inland, which furnished the best points for his triangulations. His observations were, therefore, necessarily carried further into the interior than those of Mr. Bache, who, besides a considerable amount of work at the North, has been much occupied with the southern portions of our country, where the land is lower and more level, and where Mr. Hassler never carried his operations.

While, then, they are making this primary triangulation, this secondary triangulation, which is subsidiary to the former, and this tertiary triangulation, to assist in the completion and verification of the whole, they might just as well make a topographical map of the country. They might have omitted that, to be sure; but I think that it was discretionary with the President to include this work, since, while engaged in the Coast Survey, it would make but a very little addition to the expense to make a topographical map of the coast, instead of a mere skeleton map of the different stations and triangulations. Besides, an important part of this topography is to furnish the shore line necessary to the hydrography of the coast. It is by ascertaining the precise position, as to latitude and longitude, of all the points upon the coast, that you arrive at an accurate delineation of the shore lines upon that coast. That is not all. The hydrography cannot be ascertained with any precision without the aid of shore operations. It is necessary to make triangulations with points

upon the coast, with which to connect the points off the coast, in order to mark down and describe the soundings. The system of triangulation is just as necessary, in order to enable you to delineate upon a map the character of the surface of the earth under the ocean, as to enable you to delineate the objects upon the surface of the earth upon the shore; so that trigonometrical and astronomical observations are absolutely necessary for this survey, and are, in fact, the basis of it.

Sir, we have had detached surveys, made at different times, of different parts of the coast—hydrographical surveys; and I venture to say not a single one of them has been accurate, but most of them have been, in the highest degree, inaccurate. I know this to be a fact. I know, for example, that the hydrographical surveys off New Bedford and Buzzard's Bay have been exceedingly incorrect, and that by the operation of this precise system under which the Coast Survey has been prosecuted, we have discovered the greatest dangers to navigation lying directly in the track of vessels on their way to that port—a port which owns three hundred whale ships. Dangerous sunken rocks, with but five feet water on them, have been discovered lying almost directly in the channel. The discovery of these sunken rocks by the Coast Survey may, in the course of time, save to this country more than the whole expense of the Coast Survey. A great deal has been saved by this discovery to citizens, and a great deal to the Government, for the Government very often loses more duties by the wreck of vessels in one year than the whole of the annual expense of the Coast Survey.

To ascertain and delineate the topography of the surface underneath the waters, to some distance from the shore, with the same precision with which you describe the surface of the shore, is a very important matter, sir. Navigation cannot be secure without it. The navigator who approaches your coast in thick weather, or in a cloudy night, when he cannot take observations of the heavens, and when too far out to see the lights, must depend upon his soundings for his position. Various modes have been pursued to furnish the character of the bottom, not only in the bays and sounds, but upon the sea and near the shore, and as far out as the sounding line can ordinarily reach. The common method is by means of a greased lead, which brings up a specimen of the deposites on the bottom.* These are accurately examined and described, and their character and depth, and their relations to points on the shore, which have been previously determined by scientific observations, are carefully marked on the charts.

It is desirable, then, to give not only the topography of the shore, but also the exact character or topography of the bottom of the sea on our coast within reach of soundings. Thus, and thus only, can navigation be made safe.

* A valuable invention of Lieutenant Sullwagen, of the U. S. Navy, by means of which specimens of the bottom are brought up in sufficient quantities for preservation, is used on the Coast Survey.

Now, sir, the results of that Coast Survey have already been of extreme value. The discovery of a deep and direct channel over the outer bars of the harbor of New York, never before used or known, has proved of immense importance to the commerce of that great commercial city. It has earned the gratitude of the merchants of that city, and elicited testimonials of the highest approbation from the chamber of commerce and other public bodies. The navigation of Delaware bay has been vastly improved by it. A new straight channel, parallel to the old one, has been found in this bay, better sheltered from floating ice. Three channels were found over what are called the Cape May Ridges, which will be vastly serviceable to the coasting vessels of the coal trade—a business which sends from Philadelphia annually nine thousand cargoes of coal to various parts of the coast. The whole form of the bottom of the bay has been ascertained to have been inaccurately given heretofore. Some dangerous shoals—on which wrecks have frequently taken place—have been discovered to be miles out of place on the old maps. Other supposed ones are shown not to exist. The width of the bay has been found to be less at certain points than heretofore described, by several miles, and the position of important points has been corrected. In the case of a light-house the error was some six or seven miles. For example, the position of the light-house at Bombay Hook, on the lower part of the bay, in a neighborhood noted for the number of vessels grounded there, has been found to have been erroneously assigned on the old charts by a distance of six or seven miles.

Off the shores of Nantucket a number of shoals have been discovered by Lieut. Davis, and have since been surveyed, which were wholly unknown before. They lie directly in the track of vessels from New York to Europe, from all the southern coast to several of the New England States, and from these latter to the West Indies, and are and will continue to be very serious dangers to navigation until the mariner shall be warned from them by proper beacons or other means.

Very great improvements have also been made in the navigation of Chesapeake bay. Many dangerous shoals have been discovered, by these precise operations, in that bay, which were never before known to exist; and who can tell what amount of property, and how many valuable lives might have been swallowed up in that bay but for these discoveries? Great and similar improvements have been made also in the navigation of Long Island sound, Massachusetts bay, &c. New channels have been discovered, and hidden dangers, not before known, have been pointed out.

These are some of the direct and practical benefits resulting from the operations of the Coast Survey, which will soon be extended to all the coasts of the United States. No such benefits, I venture to say, could have resulted, or ever will result, from a system different from that which we are now pursuing.

One important feature of this system, one which has been successfully car-

ried out in the progress of its investigations, is the union of the officers of the army and navy, and of civilians, for the better prosecution of the work.

Officers of the navy are now exclusively employed in the hydrography. They have not been unceremoniously set aside, nor have they been thrust out of employment for which they were fit. They are the only men who have been employed in the hydrographical department of the Coast Survey. Officers of the army have been employed on the shore work when they could be obtained, and both have rendered excellent service in this combined system of operations. Only three of the army, I think, are now employed upon the survey. Prior to the war with Mexico eleven of them were so employed. Applications are now pending, as I know, for more of them to be employed in the same service.

The combination of army and navy officers and civilians is precisely the mode of all foreign countries, except Great Britain.

In Great Britain the trigonometrical survey is confined to the ordnance branch of the military service. That is not exactly such a survey as ours. It is a geodetic survey of the whole kingdom, and the hydrographical part is comparatively limited; and is, besides, not intended, I believe, to be complete and continuous as ours will be. The surveys of that description are detached, particular parts of the coast only being surveyed and delineated, in which respect it resembles the great survey of France.

The great object of the English survey is to describe the whole interior of the kingdom. I do not know how many officers there may be employed in this, or how many vessels they may engage. Their hydrographical operations are by no means so extensive as those of the United States. They have no such extent of coast, sir, as we have; a coast of 30 000 miles, exclusive of our new possessions on the Pacific coast; and we have innumerable rivers, besides the bays and sounds. When I say 30,000 miles, I mean to count the sinuosities, of course. That is the estimate. We have a vastly more extended coast than that of Great Britain. There is a great deal more to be done. Besides, a great deal of their coast is unapproachable, and they survey only such portions as may be approached. They began in 1783, with an intention to connect, by trigonometrical observations, the observatory at Greenwich with that at Paris. In 1791 the government undertook a general survey, under the direction of their board of ordnance. We know how abundantly liberal their appropriations have been, and yet, sir, that service is going on to this day, and is not likely to be completed for some time to come. It has cost money far beyond any thing which the Coast Survey of the United States has cost. They have appropriated more than seven millions of dollars, exclusive of other large sums spent in the general hydrographical operations, to which the Senator has alluded, in the fifty-eight years during which it has been in progress. Since

1825 the annual appropriations have varied from $250,000 to $500,000 per annum.* How many officers they employ I do not know, but I know that they have a corps of sappers, amounting to three hundred and fifteen men, specially organized for the service. And it is well known that the military service of Great Britain is organized upon so large a scale that they have much greater range of selection than we have among the much larger number of scientific officers in their army.

Besides the seven millions already expended, the appropriations necessary to complete their survey have been reported at about $1,500,000; so that to finish it they will require a sum equal to the whole amount already expended by us in our Coast Survey; and it will be remembered that these additional demands are necessary to complete a plan which has been in operation for 58 years.

We have already, in 17 years, accomplished a large part of our Coast Survey; much of the primary and other triangulations of the topography and hydrography—not all of it connected, to be sure; but upon the scale of appropriation asked for, the whole may be completed in 15 years.

Plans have been adopted by the present Superintendent to prosecute the work more rapidly. He has divided the whole Atlantic and Gulf coast into nine sections, and parties are at work on all these sections, in eighteen different States of the Union. Though the work on these different sections will be separately conducted, the whole will finally be connected, so as to form one continuous series of observations and surveys, and to make the work a unit. The work in one part will verify that in another, and a general, minute, and accurate survey of our whole coast will be the result.

Now, sir, the expenses of this coast survey, so far, have been, I believe, about a million and a half of dollars; of which the sum expended in Mr. Hassler's time was $766,000, and that in Mr. Bache's time $579,000. Mr. Bache now has on hand nearly $150,000, in vessels, instruments, equipments, engraving apparatus, &c., and, deducting the cost of such of these as were purchased during his superintendence from the gross sum spent by him, we have about $500,000 as the aggregate expenditure for all other purposes during his five

*Abstract of the aggregate amount paid in each year, on account of the survey of counties and the trigonometrical surveys, since the year 1832 up to January, 1847.

Year.	Total.			Year.	Total.		
	L.	s.	d.		L.	s.	d.
1832-'3	44,329	17	3	1840-'1	84,039	4	11¾
1833-'4	42,528	14	2	1841-'2	84,365	11	11
1834-'5	50,856	5	7	1842-'3	93,147	11	1¼
1835-'6	56,404	14	5	1843-'4	77,402	9	1
1836-'7	66,447	4	9	1844-'5	65,428	2	4
1837-'8	80,149	16	6	1845-'6	57,311	19	5½
1838-'9	79,918	4	5	Up to January 1847	44,155	13	11½
1839-'40	79,681	8	0½				

years. For this sum he has accomplished more than was done with much larger expenditure in Mr. Hassler's time.

Now, sir, it is very true that the appropriations have been increased largely since Mr. Hassler commenced the work, but it is equally true that the results have increased in a much larger proportion, and that greater accuracy as well as rapidity of execution is demonstrable.

I take no notice of the work done prior to the suspension of the survey in 1819; because that was very little in amount. But I compare the work done by Mr. Hassler, from 1832 to 1844, with that done by Mr. Bache from 1844 to 1849. Mr. Hassler's reconnoisances in twelve years covered 18,103 square miles. Mr. Bache's in five years cover 22,544 square miles.

Mr. Hassler's triangulation in twelve years covered 14,483 square miles. Mr. Bache's extended over an area of 19,309 square miles. The hydrography in Mr. Hassler's time spread over an area of 9,632 square miles, a little more than half of which was off-shore; that of Mr. Bache covered 15,086 square miles, of which three-fourths was off-shore work.

Mr. Hassler's soundings were 808,147. Mr. Bache's 950,202. Mr. Hassler's engraved plates of maps were five; Mr. Bache's twenty-four. None were published by Mr. Hassler; but twenty-one have been published by Mr. Bache, and 7,678 printed sheets of maps have been distributed in his time, and not one during Mr. Hassler's.

The comparison continues the same throughout almost all the items of the tabular statement from which I draw this information.

The only particulars in which Mr. Hassler's work exceeds that of Mr. Bache are in the amount of topography and shore line, and the number of original topographical maps. It will be observed that the amount of Mr. Bache's topography is, in proportion to the time employed, larger than Mr. Hassler's. It is absolutely less, because Mr. Bache designedly reduced the amount—not considering it necessary to prosecute these surveys so far inland, and because, in this way, the expense might be lessened; of course the number of original maps would be necessarily less. The shore line, of which I now speak, is that which includes the rivers, as well as the sea, bay, and sound coast; and it will be perceived that the amount of this under Mr. Bache is two-fifths of the whole, although his time is less than one-third of the whole time.

Thus it appears that the work done by Mr. Hassler was far more limited in its amount than that performed by Mr. Bache. I do not say this as a matter of reproach to Mr. Hassler; far from it. He had the difficulties of the early organization to surmount, and, during the first half of his superintendence, smaller annual appropriations were made by Congress. He had also to educate for the service some of these very persons who now seek to destroy the progress and prosperity of the work. But I wish to show that while the

appropriations have been increased when Mr. Bache has had the superintendence, the work which has been done has increased in a greater proportion. The work is advancing much more satisfactorily, and will accomplish much sooner its great object—that is, the security of the commerce and lives of the citizens of the United States. Almost all discoveries in science are so connected that it is scarcely possible to prosecute the necessary operations of the Coast Survey without advancing incidentally the interests of science on matters not of themselves indispensable to the work. But who will venture to object to that, when this grand object is accomplished? The further expense will be a mere nothing; and when it is in the power of the President to allow it or disallow it, he must of course be supposed to have allowed it, if he has not expressly disapproved.

The Senator from Missouri seems to think that this will subject the army and navy to the command of the Treasury Department, instead of the President of the United States; that it would subject, and had subjected, the army and navy to the command of the Secretary of the Treasury. Why, I apprehend that the Secretary of War never dreamed of any such results. I venture to say there is not a single instance in which any officer of the army or navy has been subjected to the command of the Secretary of the Treasury by virtue of the introduction of these words into the act to which the Senator has referred. The Secretary of the Treasury has never dreamed of taking any authority into his hands over the army or navy of the United States on account of this phrase. He has never called upon one of them to do any service connected with this survey, without the express assent and direction of the Secretaries of War and Navy. It depends upon them, and not upon the Secretary of the Treasury, whether those officers shall be ordered into the service of the Coast Survey or not. It is so with the men; it is so with the vessels of the navy. At this very time an application is pending before the Secretary of War for more officers of the army for this very service.

Now, sir, the Senator stated that there were thirteen vessels employed in our Coast Survey, whereas there were only ten employed in the British hydrography.

Mr. Benton. Before a certain day.

Mr. Pearce. Be it so. Now, sir, these thirteen vessels—are they an excess or not? That is the question. As I said before, we have the coast divided into nine different sections, in which the work is all going on at the same time. It is necessary to have a considerable number of vessels to carry on all these operations in the different sections, and execute the work properly and efficiently. They are not only necessary for the hydrographic part of the work, but it is necessary to have small vessels connected with the service for the topographical and triangulating parties. Some of those vessels are so employed to my own certain knowledge, for I have seen them in the Chesapeake bay.

They are used not merely for the purpose of carrying on the hydrographical operations, but to furnish lodgings for officers and men. In the sickly regions it would not be safe for the parties to sleep in tents upon the marshy shores. It is the experience which the officers of the Coast Survey have had in this which induced them to ask for these vessels. They obtained them, and they do not camp on shore by night; they do not sleep on those low shores, subject to the miasma and the vapors, but on board of their vessels. They found this to be not only more healthful, but very economical. Besides, in thinly settled parts of the coast, they must carry all their supplies in this way; and, indeed, the vessels are necessary sometimes to carry them from one point to another, where a passage is only practicable by water.

Now, sir, in regard to the vessels obtained, and the circumstances under which they have been obtained. Some of these vessels have been turned over to them from the revenue service. A steam vessel, for instance, was built several years ago, at great expense, without authority of Congress. Gentlemen will remember the complaint of this in Mr. Tyler's time—the passage of a bill to prevent it in future, which was vetoed by the President, and passed, in spite of his veto, by two-thirds of both Houses. Two of these vessels, one of which cost $120,000, were found utterly unfit for the use of the navy or revenue service. This vessel was not fast enough for a revenue cutter, and was vastly more expensive than sailing vessels, and was not a good sea-boat. When one of them returned from Mexico to New Orleans, it was advertised to be sold at auction, and $3,000 only was bid for it. The officer having charge of it would not complete the sale at that price, and sent word to the Department, who thought proper to transfer it to the Coast Survey. As the operations of the Coast Survey do not require very rapid movements, nor oblige vessels to put out far to sea, this vessel answers her present purpose pretty well. Such has been the case with another one.

The Senator says that the additional expense of this little fleet, not charged to the Coast Survey, is about $210,000 per annum—making the proposed expense of the next year about $400,000. But this is a mistake. These vessels are sailed or steamed out of the Coast Survey appropriation. The men, of all but those used in the hydrography, are also paid from the same fund. The officers and men of seven of them are furnished by the navy; and the Secretary of that Department, in a report recently sent in, states that their whole expense for five years is $193,000, or at the rate of $38,600 per year. So that the Senator's calculation is entirely at fault.

Now, it is asked that an appropriation should be made at the rate of $186,000 per annum, and that is thought to be enormous. Well, it is certainly larger than the amount appropriated in Mr. Hassler's time, which in his last year was $100,000. The Senate will recollect that we are increasing the force. In fact,

you are getting the work done sooner, better, and cheaper, by making appropriations to have it carried on upon a proper scale. The plan, progress, and economy of the Coast Survey, have received the approval of every scientific man of any note in the country, and of the Department. I have before me the testimony of learned societies and of learned men, and I find one single sentiment to pervade them all.

The Superintendent, sir, is not always in the field, it is true. He cannot always be in the field, but he is in the field for eight months in the year, conducting and superintending the observations—always, when in the field, making astronomical and geodetic observations himself. Indeed, whenever there is any difficult process to be carried out, such as measuring a base line, for which purpose his ingenious apparatus has commanded the admiration of the scientific world, he always personally attends to it. But he cannot be in all the points of the survey at once. In the neighborhood where he is, he always makes all the more important observations himself. It is true that he has a number of assistants. But the scale upon which his plans are pursued, and which I may say has received the approval not only of the President of the United States but of Congress, requires all the assistants allowed him. The specific details of all their work are regulated by instructions directly from him. Mr. Bache has furnished every year a full account of his operations to the Department and Congress. He has concealed nothing.

He is not only a man of profound scientific ability, disciplined in the severest school of study known in the United States, but he has matured and improved his earlier acquisitions since his arrival at manhood by the most diligent research, perseveringly pursued at home and carefully prosecuted abroad, and indeed by every means known to the philosophic scholar. To all this ability and acquirement he adds a simplicity of character which becomes the philosopher, which not only sheds a grace upon him, but secures for him the fullest confidence of all who know him.

Such a man could not and would not conceal any thing from Congress and the public; and, accordingly, he has developed in the fullest manner, and to the minutest point, all his plans and operations. With a full knowledge, therefore, of all they could desire to know, Congress has made the appropriations asked for, and has thus sanctioned the manner, the means, and the extent of the Coast Survey as conducted at the present time.

I think a work so interesting to science as this, so incalculably valuable to the country, so honorable to the Superintendent, his assistants, and all concerned, should not be changed or checked, more especially in this manner.

I trust that the old exploded system of detached and imperfect surveys will not be resumed. That system has uniformly ended in disappointment and failure, and the present is the only one worthy of Congress and the country.

(2) 169

THE

COAST SURVEY

OF THE

UNITED STATES.

U. S. COAST & GEOD. SURVEY
MAR 19 1885
LIBRARY.

By LIEUT. C. H. DAVIS, U. S. N.

See, also, same article in "The American Almanac and Repository of Useful Knowledge, for 1849" p. 65.

CAMBRIDGE:
METCALF AND COMPANY,
PRINTERS TO THE UNIVERSITY.
1849.

18a

170

THE

COAST SURVEY

OF THE

UNITED STATES.

By LIEUT. C. H. DAVIS, U. S. N.

CAMBRIDGE:
METCALF AND COMPANY,
PRINTERS TO THE UNIVERSITY.
1849.

Blank page retained for pagination

THE COAST SURVEY.

It was to be expected that a people devoted to the pursuits of commerce, and depending, in some degree, on the sea as a means of communication between distant parts of the national territory, should demand, at an early period of their history, a competent survey of their coasts and inland waters.

But a short time previous to the separation of the Colonies, charts had been constructed of the shores and harbours of North America, under the direction of J. F. W. Des Barres, his Majesty's Surveyor-General for the Colonies. The progress of his labors was interrupted by the Revolution. The surveys made under the personal superintendence of Des Barres still bear testimony to his skill and fidelity, and present a generally correct view of those parts of New England and the British possessions which, being rocky, are but little liable to change. They continue to form the principal basis of the charts of the northeastern coast of this continent. In the Southern and Middle States, however, they have been rendered worse than useless, by the inconstant character of the bottoms, and the unequal merit of the originals. The surveys of Des

Barres, covering a vast extent of coast, were originally deficient in minuteness of detail, and in hydrographical information; and these defects have been increased by the rapid and extensive changes in the direction, means, and wants of navigation caused by the growth of the country.

The project of a complete survey, conducted upon a uniform system and extending over the whole coast, was first proposed by the late Professor Patterson, in 1806. It combined three objects, the astronomical determination of prominent points, a triangulation to connect those points, and a hydrographic survey based upon this triangulation. Mr. Gallatin, then Secretary of the Treasury, encouraged the project, and obtained in writing the opinions of learned men as to the best mode of executing it. He selected the plan of operations recommended by Mr. Hassler, the first Superintendent of the Coast Survey. This gentleman, a native of Switzerland, had been employed in the triangulation of the Canton of Berne, and had studied the science of geodesy under the most distinguished masters. It was exceedingly fortunate that his presence and advice here secured the early adoption of the only method of conducting a comprehensive trigonometrical survey that science approves, — the only one of which the results have a certain and permanent value.

It is only, however, since the year 1832 that the survey of the coast has been in steady and active operation.*

The history of its fortunes, or rather misfortunes,

* During this long interval of neglect on the part of the government, the coasting trade and foreign commerce of the country have been chiefly indebted to the indefatigable labors of those distinguished hydrographers, the Messrs. Blunt of New York, (both father and sons,) for the means of safe navigation.

during the preceding twenty-five years, may be recited in a few words. A law authorizing a survey of the coast was passed in 1807, but nothing was done under the law until 1811, when Mr. Hassler was sent to Europe to procure the instruments specified in his plan. They had all to be constructed. The war of 1812, and the failure of remittances, prevented Mr. Hassler's return before 1816, and in August of that year he was appointed to the office of Superintendent. In 1818, Mr. Hassler's connection with the work was broken off, by the repeal of that part of the law of 1807 which authorized the employment of citizens. During the ten years that followed, the Coast Survey seems to have been forgotten by the public and by Congress. In 1827, Mr. Southard, the Secretary of the Navy, a name never to be mentioned without an expression of the high respect which ability, patriotism, and long, faithful, and valuable services must always command in the republic, took occasion in his annual report to say, that perfect surveys and charts of our harbours could not be made without the aid of the means contemplated by the act of 1807, and in February, 1828, the House directed the Committee on Naval Affairs to inquire into the expediency of carrying into effect the provisions of that act. Finally, in 1832, the act of 1807 was revised, and an appropriation made for carrying it into execution, and since that period regular annual appropriations have been made, varying in amount, but generally such as have been called for by the estimates of the Superintendent.

In 1843, there was added to the appropriation a proviso, stipulating that a board, consisting of scientific persons in the service of the government, should be empowered to reorganize the work, and the plan pre-

sented by them, when approved by the President, was to be, and is now, the law regulating the operations of the survey. The scientific methods pursued by Mr. Hassler were continued, and it was directed that the topography should be carried so far inland as might be necessary for a proper delineation of the shore, and for purposes either of commerce or defence.

It is now understood that the aim of the coast survey is to furnish, with the utmost attainable accuracy, and in a connected and uniform manner, all the geographical, topographical, and hydrographical data that can be made in any way useful to the navigation and defence of the coast. And it is also supposed, that, in collecting these data, information will be accumulated that may become serviceable in suggesting and directing local and general improvements; such as the placing and constructing of light-houses, beacons, buoys, &c., the means of improving channels, the effect of contemplated constructions upon harbours and tidal deposits, the suitableness of a submerged soil for building, &c. And, lastly, it is presumed that those States through which the survey passes will, sooner or later, avail themselves of the base it is able to supply, to form a correct geographical map of their own territory, under circumstances very favorable to economy and accuracy. These are the practical benefits, either direct or incidental, conferred by the coast survey.

In abstract science it has also its mission, equally useful and distinguished. It is to contribute a part of the means by which the irregularly elliptical form of the earth may be satisfactorily determined, the variations in local gravitation, their causes, and thence the internal structure of the earth, be made known, and

the phenomena of terrestrial magnetism be explained. It will illustrate the astronomical problem of the tides. Its numerous meteorological records will also contribute to a better knowledge of the climates of the United States, and of the nature and action of meteoric storms, and thus be of service to the farmer as well as the navigator.

The science of geodetics prescribes the principles upon which a survey of an extended region should be conducted. In the ordinary operations of land-surveying, the surveyor is permitted to regard his field of work as a plane surface; but the engineer who is to construct a map of a whole country, or of a long line of continuous sea-coast, must take into consideration the spheroidal figure of the earth, and present an exact delineation of that part of the spheroid upon which he is employed. This necessity controls the processes used in computation, and the plan of projection upon which the detailed results are given, whether it be called a map or chart. Both the projection and the formulæ for computation involve the higher mathematics, and require an acquaintance with the most advanced state of the mathematico-physical sciences.

The system of projection introduced by Mr. Hassler originated with Flamsteed. It is the development of a part of the earth's surface upon a cone, either a tangent to a certain latitude, or cutting two given parallels and two meridians equidistant from the middle meridian, and extended on both sides of the meridian and in latitude only so far as to admit of no deviation from the real magnitudes, such as would be sensible in the detail surveys. In this method of reducing the curved surface of the earth to a plane, the radii of curvature of the parallels and meridians, de-

pending upon the value given to the expression for the ellipticity, and the assumed form of the globe, are important terms. For practical use, tables have been computed in the office of the coast survey, showing the length in metres of every minute and second of the arcs of the meridians and parallels comprehended in the maps. It has been found necessary to re-calculate these tables since 1844, on account of the new value of the ellipticity announced by Bessel, and adopted by the present Superintendent. There will be occasion to recur to this subject.

The practical operations of the Coast Survey are classed under the general heads of triangulation, astronomical and magnetic observations, topography, and hydrography. The fundamental basis of the survey is a network of great triangles, the sides of which, varying from ten to sixty miles, are the longest that the limits of vision or the nature of the country will allow, and hence a mountainous region is much the most favorable for a first or *primary triangulation.* The starting line, or first side of the first triangle, called the *base line,* is measured by mechanical means, and this is a labor demanding, as much as any other on the survey, accuracy, a philosophical regard to minute details, and long previous preparation. Observing, in passing, that several kinds of measuring-rods have been heretofore used, as wood and glass, and that the apparatus of Mr. Hassler consisted of an assemblage of four iron bars, each of them two metres in length, with which he obtained excellent results,*

* In 1817, the *preliminary* measurement of two base-lines was made by Mr. Hassler, and in 1834 the length of the same lines was determined by computation, carried from the new base on Fire Island beach. The difference between the measured and computed lengths of these lines was in one case less than a foot, and in the other about four inches; the bases themselves were 5.9 and 4.8 miles long.

it will, perhaps, best serve to convey an idea of the difficulty of measuring a base-line, if some account be given of Professor Bache's base-apparatus.

The measuring-bars are upon the compensating system, first used by Colonel Colby in Great Britain, and by Mr. Borden in the trigonometrical survey of the State of Massachusetts; but a principle not before applied was introduced in reference to the dimensions of the bars, which is thus stated. Bars of brass and iron (the materials employed), of the same dimensions, will not, owing to their different conducting powers and specific heats, heat equally in equal times, and therefore, during changes of temperature, the system ceases to be compensating. This Mr. Bache corrected by giving a coating to the bars that made them absorb equally, and by proportioning the sections to each other, so that both would have the same temperature during variable temperatures of the atmosphere. In order to do this satisfactorily, it was necessary to make direct experiments upon the materials of the bars themselves, after having first arranged them approximately by means of the numbers taken from the books. The contact between two sets of bars is made by a blunt knife-edge and a plane of agate, and a lever of contact at the ends of the bars is corrected by a level so delicate, that several of its divisions make up a quantity entirely insignificant in the measurement. The bars are covered with a double conical case of tin, to keep the fluctuations of the temperature within moderate limits, and the bases on which they are supported are covered with several thicknesses of imperfectly conducting material, for the same purpose. The length of the apparatus is compared, before and after final measurement, with a standard iron bar that had

been compared in the Coast-Survey office by means of Mr. Saxton's reflecting pyrometer. By this instrument, a change of the one hundred thousandth part of an inch in the length of the standard bar is perceptible.

To the preceding description it should be added, that the bars (regulated in size by the relative specific heats of the two metals) were heated above the possible temperature to which they could be exposed in use, in order to give them a set. This precaution was at first overlooked in the compensation base-apparatus of the British ordinance survey, and it was afterwards found necessary to resort to it. Those who are at all familiar with the subject will perceive that Professor Bache's application of the lever of contact and level (first used by Bessel in standards of measure) has not only greatly increased the delicacy of the instrument and lessened its complexity, but also removed several sources of error. By optical contact, and the employment of a microscopic apparatus to determine the distance between the compensation points, the measures are repeated in two different terms, each having its peculiar standard. Such was the case in the British and Indian surveys, and Colonel Everest complains of the consequent liability to error, and the burdensome accumulation of petty corrections. The re-measurement of a base of seven and a half miles, in India, differed, however, only 2.4 inches from the first length. In a base of seven miles, Professor Bache found that the same difference might be about 0.5 inch, if all the errors were supposed to fall on the same side, which is most improbable. The probable error in re-measuring one hundred and twelve yards was less than five thousandths of an inch, and the actual resulting error in re-measuring one third of a mile was nothing.

This may appear like refining too much, but it must be known that the lines measured by the same bar in winter and summer might differ materially in nominal length. This difference in the original base of the coast survey might be about twenty feet, and, at a rough estimate, an error of twenty feet in this place would amount in one of the large triangles, of which the sides are between fifty and sixty miles, to about one tenth of a mile.

The source of error and its correction being recognized, there is no other limit to accuracy than the possible.

We return now to the great triangles of the survey, which, as has been said, form its fundamental basis. The points of the primary triangulation are selected with scrupulous regard to all those conditions which make triangles, in the technical acceptation, good. Scattered at distant intervals over the vast field of work, they are certain guides by which the more detailed operations are conducted and controlled. Within them the space is subdivided into smaller triangles, constituting the *secondary* and *tertiary triangulations.* They bring down the work to the minute details of topography and hydrography, and these subsidiary triangulations and details, circumscribed as they are by the primary points, are restrained and corrected by them in their deviations. As an additional explanation of the necessity for this first net of great triangles, it may be well to inform the general reader that there is no instrument, however delicate in construction, that is not liable to very small errors, which the most studious attention to every disturbing influence, whether mechanical or meteorological, cannot altogether remove. Now this primary triangulation, which in a mountain-

ous region spans the surface with giant strides, has fewer of these unaccountable errors, simply because it has fewer triangles. It is hardly necessary to add, that better instruments also are used in it. The two and a half feet theodolite, made by Simms (after Troughton's death), under Mr. Hassler's supervision, and used by him and by Professor Bache in the primary triangulation, is still regarded in this country and in Europe as a masterpiece of invention and mechanism. It reads to seconds.

Magnetic and astronomical observations accompany the primary triangulation. The latter are for latitude, longitude, and azimuth, or angular direction from the meridian.

Following the secondary triangulation in order comes the *Topography*, the duty of which is to delineate faithfully the features of the ground. It exhibits the height and contour of elevations, the shape and extent of plains, the courses of streams, all the constructions of man, and the waving and indented outline of the shores. It distinguishes the tilled land from the pasturage, and the grove from the orchard, and designates the character of the woodland. It speaks a universal language, and observes strict fidelity to nature.

Depending upon the secondary triangulation and the topography for its means of progress, follows the *Hydrography*. In this term is included all that concerns local navigation, as the depths and character of the bottom, the direction and strength of the currents, the ebb and flow of the tides, and the information, coming under the head of sailing directions and nautical instruction, which makes up the valuable knowledge of the local or general pilot. This branch enjoys the honor of announcing the nautical discoveries of the

Coast Survey, which, though resulting from the combined operations of all, are yet brought out by its means.

In the preceding pages the plan of the survey is presented, and the general distribution of its labors is stated; it remains now to speak of the execution of the various details, and of the benefits that have been conferred by the Coast Survey upon science, and upon the local and general commerce of the country and of the world. In doing this it will be most convenient to keep to its actual state at this day.

It would not be just, however, to leave its past history without a tribute of respect to the memory and services of the man by whose enlightened efforts a right direction was given to the views of the government in founding the survey, who was faithful to it through thirty-five years of checkered fortunes, and who literally died in the performance of its duties, having written the last few lines of his final report after he felt that he had been touched by the hand of death. Educated in the best European schools of theory and practice, and devoted to the pursuits of science, for which he was eminently qualified by natural endowments, Professor Hassler always brought to the task before him that zeal and tenacity of purpose which give spirit to enterprises of great moment, and gain for them the name of action. He is honorably known for his mathematical and astronomical writings, and his papers in the American Philosophical Transactions, containing an account of the methods employed by him on the Coast Survey, will always be regarded as a valuable contribution to geodetical knowledge. Those who knew him intimately praise the ardor of his friendship and the generosity of his disposition,

while the labors of his life, and the manner in which they were performed, bear ample witness to his industry and integrity. That he had some defects of character it is hardly necessary to say, for this is the inevitable lot of humanity; but they were not such as it requires the exercise of magnanimity to forget, and time, which is rapidly drawing over them a veil of perfect obscurity, will endear his name and his virtues to the reverent and affectionate respect of all true lovers of American science.

On the death of Mr. Hassler, in 1843, the appointment of his successor was regarded with deep interest by the learned men of the country. The office of Superintendent of the Coast Survey is recognized as one of the central positions of American science, and the incumbent is expected, not only to be able to fulfil its prescribed duties, but to be qualified to direct his powers to the advancement of knowledge in every department of the work. How far the present Superintendent, Professor Bache, is suited to answer these expectations, to sustain the national reputation, and to promote the cause of science, may be estimated from the fact, that his appointment was solicited by gentlemen in all parts of the country, engaged in the pursuits of learning. He was educated at West Point, and since graduating there he has, in connection with the Franklin Institute and the University of Pennsylvania, followed a course of physical science that has made him well known in this country and in Europe. While travelling as the President of Girard College, he received from the principal European Academies distinguished marks of consideration. It is but justice to Professor Bache to say, that there is no branch of the work into which he has not been able to introduce

improvements, either owing to the discoveries of the day, as in the use of the magnetic telegraph for meridian differences, or owing (still oftener) to his own great and eminent scientific attainments. This must appear in the course of these remarks, but it is quite as creditable to his administration to state, as may be done with strict accuracy, that the amount of results now obtained is double that under the former plan, for an increase of fifty per cent. in the cost.

The points of the *primary triangulation* are selected by means of a preliminary reconnoissance.* As they constitute the authority to which the rest are subordinate, and by which it is controlled, it is of the greatest consequence to know the circumstances under which a satisfactory result may be secured with the least delay. The rule generally followed (and adopted by the former Superintendent) is to observe on those days only that appear entirely unobjectionable. This rule is attended with a serious loss of time. Mr. Bache has increased the rapidity of the work, and improved rather than diminished its value, by applying the mathematical test of the least probable error to observations made under such conditions as are ordinarily favorable and of frequent occurrence. The number of observations made under these conditions, which will reduce the probable error to what is attributable to the unavoidable errors of instrument and observer, is ascertained and taken as a governing rule. Six tri-

* The reconnoissances that precede the triangulations are indispensable, and require great judgment. The object of the general reconnoissance is to make known the facilities and difficulties of the work, and to discover the best plan for its execution. A particular reconnoissance decides the position of the stations and presents a general sketch of the triangles in any section.

angles measured by Mr. Bache in 1844 gave for the greatest difference from 180°, after allowing for the spherical excess, 0".2 (of space) to each angle; from this, the difference descended to nothing.

Allusion has been made to the necessity of re-computing the first tables of projection, in consequence of the adoption of Bessel's latest determination of the ellipticity. The tables for computing the triangles have also been affected by this change, and the formulæ have been revised, and undoubtedly greatly improved in convenience and accuracy. The tables have undergone a further modification by substituting the *legal* ratio of the metre to the toise in the place of the arbitrary standard resulting from the ingenious, but (as Bessel has said) "not allowable," comparisons of Mr. Hassler.

This is the proper place to advert to the mode of operations pursued on the Southern coast. It was perceived, in the early progress of the work, that the inaptitude of this level region for a comprehensive triangulation was to be overcome, either by great expense, or by resources not yet developed. The most apparent expedient was that employed in the northern section of the great meridional arc of India, where it crosses the flat territory of the Doab. Costly edifices of masonry, with walls five feet thick at the base and two at the summit, are erected at each of the principal stations, and their height, about fifty feet, is sufficient to command a view above the vegetation. And this expedient was, if contemplated, in accordance with the former progress of the American survey, which, advancing in two directions from a central base, was necessarily slow.

In 1845, however, the present Superintendent ex-

hibited in his annual report a plan for the more rapid execution of the survey, which consisted in dividing the whole of our extended seaboard, including the Gulf of Mexico, into nine sections, comprising a nearly equal extent of shore line, and in prosecuting the work separately and simultaneously in as many of these sections as the appropriations would allow. The work of each section is commenced by the measurement of a base-line, and, as the triangulation is extended, this base serves as the verification-base of an adjoining section. The rapidity of this plan is made apparent by considering that all the different processes of the survey (in their necessary order) may be conducted at the same time in every section, and thus, if the appropriations were sufficient, the whole coast might be completed in the time required for a single division of it. But this plan accommodates itself more easily to the character of the ground, than one in which the direction and progress are derived from previous connections. Indeed, every latitude is allowed for the selection of sites for bases, and for the most favorable disposition of the triangles; because each section is for the time a distinct undertaking. The combination of all will unite the extended coast of the United States into one comprehensive scheme of triangulation.

The value of permanent and conspicuous structures of masonry to designate points of primary triangulation is not, however, underrated. While temporary means of elevation are employed, such as the high tripods, with independent stands for the instruments, first used in Delaware Bay by the senior assistant of the survey, Mr. Edward Blunt, of New York, it must be remembered that the coast survey is enabled to

avail itself of the light-houses, and other lofty structures along the coast. And it may be safely concluded that the governments of the Southern States will raise appropriate edifices at those points of the primary triangulation of the coast survey which limit the basis of their local operations.

Accompanying the primary triangulation, as an essential part of it, are the *astronomical* and *magnetic observations*. The former are for azimuth, latitude, and longitude. For the determination of azimuths, Mr. Bache has employed (for the first time on the work) the elongations of Polaris in its eastern and western digressions. At the time of elongation, when the change in altitude is most rapid, the movement in azimuth is nothing; and thus the opportunity is enjoyed of making careful and deliberate observations. This method is independent of local time. By using several circumelongation observations, a mean of a number of results is substituted for a single one. In this reduction a very simple formula, first investigated by Mr. Nulty of Philadelphia, has been applied, and the practice is simplified by the use of tables for the computations of latitude, subjected to a slight trigonometrical change. It is proper to state that this method has been in use on the survey since 1845, as one similar to it, if not identical with it, has recently been communicated to the Royal Astronomical Society of London.

The Superintendent has adopted the suggestion of the Astronomer Royal at Greenwich, who proposed referring the points of greatest elongation of circumpolar stars to marks in the horizon, by perpendicular lines demitted by means of an altitude and azimuth circle. Elongation signals are established about two

miles distant, consisting of a delicate wand by day, and a lamp by night, the latter seen through a perforated board.

The determinations of the latitude (as well as of the azimuths) are frequent. Since 1844 fourteen stations * have been occupied for latitude, and seven for azimuth, in Sections I., II., and III. of the survey. A comparison of the latitudes deduced geodetically from a central point with astronomical determinations led the Superintendent, in 1844, to the discovery of certain variations in the level, which could only be attributed to changes in form and density of the material composing the earth's crust. These variations are *similar* to those caused by the proximity of mountains; but whilst the latter have been well understood, the former had escaped notice. The numerous determinations of this element will therefore occupy an important place in the future discussions of the general form and internal structure of the earth. A similar discovery has since been made in the ordnance survey of Ireland by Major-General Colby, and appears to have been anticipated by Laplace in the opinion given by him in the Chamber of Peers, in 1817, upon the topographical map of France: — "If the latitudes of the extreme points (of certain lines) and of several intermediate points are observed, and the length of the seconds pendulum corresponding to

* At the astronomical station at Nantucket, important as the southern extremity of the longest arc of the meridian that can be determined on the New England coast, the observations have been for several years in the hands of William Mitchell, Esq., and his assistant. During the past year Mr. Mitchell has observed 155 culminations of the moon and of moon-culminating stars, 5 occultations, 93 series of altitudes for latitude with the West Point repeating circle, 89 prime vertical intervals, and 160 meridian transits.

these points measured, a great deal of light will be thrown upon the figure of the earth, and upon the irregularities of its degrees and of gravity."

It is very interesting, in this respect, to know that latitudes observed at the extremities of the side of a triangle, and forward and backward azimuths on the same line, have differed by several seconds, and that these deviations in the plumb-line have occurred where the want of uniformity (whether arising from differences in density, or the want of homogeneousness of structure) was not apparent as a topographical feature of the country.*

After the computations from which the preceding conclusions are derived were verified, the results were confirmed by the introduction of new instruments on the work. During the last year, a zenith telescope has been used for obtaining the latitude, by a method invented by Captain Talcott, which consists in observing the differences of zenith distances of stars culminating within a short distance of each other, and at nearly the same altitudes, on different sides of the zenith. The circummeridian altitudes by the repeating circle, the prime vertical transits, and the absolute measurement of zenith distances by the zenith sector, are still used.

Observations for the comparison of these instruments and methods have been made by the Superintendent, and by Captain T. J. Lee, of the U. S. Topographical Engineers, an assistant in the coast survey, whose valuable labors have been chiefly devoted to the astronomical and magnetic observations.

---

* It has been recently announced that the irregular and unsatisfactory results of La Caille's measure at the Cape of Good Hope are due to the local attractions at the astronomical stations of his arc.

Of the *magnetic observations* it will be sufficient to say, as an indication of their character, that they are made with the new instruments invented by Dr. Lloyd and Mr. Weber. The portable declinometer of Mr. Weber (perfected by Lieutenant Riddle and manipulated according to his instructions) measures inclinations, and, by a subsidiary apparatus, the horizontal force, by the method of Gauss. Fox's dip circle, with the use of the deflecting magnet, has given very satisfactory results. By means of these instruments, the *declination*, *inclination*, and *intensity* (horizontal and vertical) are determined in a manner that supplies all that is practically necessary and contributes valuable additions to general magnetic researches.

Longitudes have been determined by occultations, eclipses, moon-culminations, and the frequent transportation of chronometers. Mr. Bond, the director of the observatory at Cambridge, Mass., communicates the meridian differences by chronometers between the British observatories and Boston.

All determinations of this element are referred to a principal port on the sea-coast, and are connected in the aggregate with differences obtained from Europe by chronometric and astronomical comparisons. The security against error afforded by employing persons to compute, who are disconnected with the duties of the field or the observatory, is well understood. Gentlemen in private life are engaged to repeat the important calculations of the survey, and this system, which enlarges the sphere of labor in a way not less commendable for its economy than for its other advantages, receives universal sanction.

But the discoveries of Professor Henry, (Secretary of the Smithsonian Institute,) resulting in the inven-

tion of the magnetic telegraph, have provided a new and more precise method of arriving at the difference between the times of two places, or their difference of longitude expressed in time.

The details of these observations are consigned to Mr. S. C. Walker. The following concise account of the manner of transmitting the signals, of the possible errors of observation, and of the real value of the results, is from the pen of Dr. Bache.

"The signals are given at one of the stations by pressing a key, which causes a closing of the circuit. This closing it is intended shall be simultaneous with the ticking of a clock or chronometer at the station. The circuit being closed, if the electrical wave or current takes a sensible time to propagate itself, or to pass from one station to another, the absolute time in which the signal reaches the second or receiving station is sensibly different from that of making the signal at the first or giving station. A coil about the poles of a horseshoe magnet of soft iron forms part of the circuit through which the electrical effect is transmitted. Under its influence the soft iron becomes magnetic, attracting the soft iron bar (armature or keeper) delicately poised at a determined distance from the poles of the magnet; the movement of this keeper sets in action a local battery, which gives sufficient power to make the dots and lines constituting the Morse telegraphic signals. The click of the keeper of this temporary magnet is compared, at the receiving station, with that of a clock or chronometer, thus marking the time at which the signal made at a known time at the giving station is received. From this explanation, it appears that there is liability to error."

Dr. Bache then proceeds to enumerate five possible errors, numbered in order, and shows that the numerical values can be in each case assigned to two (viz. 1 and 5), and that one (viz. 2) is insensible. A comparison of the observations proves that the errors denoted by 3 and 4 are cancelled by a very small residual quantity having the opposite sign, and "the interesting consequences follow, that 'the telegraphic method of comparing clocks, distant two hundred miles from each other, is free from error when the method of coincidence of beats is employed; and that the probable error of the longitude, from this method, is the same as the mean result of the computed relative correction of the clocks for the nights of observation.' An investigation of the probable value of such error shows that, under favorable astronomical circumstances, and with due care in the use of the transit instrument, 'the astronomical difference of longitude between any two stations of a trigonometrical survey may be determined by telegraphic signals, with a degree of precision of the same order as that of difference of latitude,' the inaccuracy depending upon the same causes as the deviation of the plumb-line."

Before concluding with the primary triangulation, it must be observed that Dr. Bache uses reciprocal vertical angles for determining differences of heights at the primary stations. These angles may be measured at a time of day when it is impracticable to observe horizontal angles, and the effect of refraction near the surface is investigated by a long series of observations.

The space circumscribed by the terrestrial angles of the first order, and defined by the celestial observa-

tions that accompany them, is subdivided into a minute network of smaller triangles, constituting the *secondary* and *tertiary triangulations*, the points of which embrace and determine headlands, light-houses, beacons, churches, hills, and all conspicuous objects along the coast, that can be made useful in its navigation. They also bring down the work to the details of the topography and hydrography, and supply the bases for these branches of the survey.

It has been already mentioned, that the topography is minutely and exactly descriptive of the ground, both in form and character. The Lehman system of topographical drawing has been adopted, but with such modifications as the nature of this country exacted, in order to preserve the beauty of the maps. The slopes are represented by hachures, the strength and distance apart of which indicate the degree of inclination. In the original maps, the horizontal curves limiting the different slopes are drawn in red ink, as the draughtsman progresses in his sheet.

The scale of the original sheets is $\frac{1}{10000}$, or about $6\frac{2}{3}$ inches English to the mile. Plans are frequently executed in the field, and furnished from the office, when wanted for local improvement, on twice this scale. But the charts designed for navigators are necessarily reduced in dimension. The harbour charts are published on the scale of $\frac{1}{20000}$, or about $3\frac{1}{3}$ inches English, and the more general charts on that of $\frac{1}{80000}$, or about three fourths of an inch, to the mile; which last is the scale of the *great* topographical map of France. In all the maps, the topographical details are faithfully preserved, including height, contour, &c.

It appears from the report of the council of the Royal Astronomical Society to the twenty-seventh

annual general meeting, that a similar scale of execution, and an equal fidelity of representation in the topographical details, have been finally attained in the ordnance maps of England and Ireland. In both the American and English maps, the subdivisions of the meridians and parallels are so minute, that parts of a second of space can be estimated.

As the first object of the Coast Survey is the knowledge of our own shores and inland waters, and the general improvement of the navigation, both external and internal, of the coast, so the large class of facts and researches embraced in the general term *hydrography* ~~are~~ is regarded as being of paramount importance. It is to the hydrography that the friends of the Coast Survey direct the public attention for the evidences of its great practical utility, and the discoveries in this department have been so numerous and valuable, as to secure for it a high degree of public favor.

The first popular inquiry concerning the Coast Survey is as to the progress it has made, and this inquiry is satisfied by learning the extent of the shore line over which the hydrographer has passed. But before estimating its performance in this way, it is necessary to say, that, as the operations of the triangulation, &c., must precede the hydrography, this leads to an unfair estimate. The hydrography can only be laid down when the trigonometrical points on which its operations are based have been established; thus two thirds of the work may be completed when the hydrographical labors commence.

In 1844, the first year of Dr. Bache's superintendence, nine States on the Atlantic seaboard shared in the benefits conferred by the Coast Survey; in 1845, thirteen States; in 1846, fifteen; and in 1847, eighteen

States. The estimates for the present year include all the States on the Atlantic and the Gulf of Mexico, and it may be inferred at once from this statement, that, if sufficient appropriations are supplied by Congress, a definite and not distant period can be assigned for the completion of the whole work.

Having premised this statement, which was necessary to give a correct idea of the progress of the work, it may be added that the nautical parts of the survey have extended, generally, from Nantucket Sound to Hampton Roads nearly, including the Vineyard Sound, Block Island and Long Island sounds, with all their harbours, great and small, New York bay and harbour, Delaware bay and river, a large part of Chesapeake Bay, together with most of the rivers emptying into it north of the Potomac, and all the external sea-coast, from the southern coast of Massachusetts to the Capes of the Delaware.

In this broad field a little remains to be done, but very little in comparison with the whole. In addition to the above, something has been accomplished in the hydrography of Albemarle and Mississippi sounds, and in the latter especially great benefits have already resulted to its local commerce.

It will give, perhaps, the best idea of the value of the hydrographical work to enumerate some of those discoveries and corrections which, in different places, have signalized the progress of the Coast Survey.

The first of these in order and in merit is the discovery of a new channel, straighter and deeper than the channels before known, over the outer bars of New York harbour. Such a gift as this to the first commercial city of the continent, where it was very much needed, ought to gain permanent favor for the enterprise by which it has been made.

Important changes in the main ship-channel near Sandy Hook were first noticed by Major Bache, of the Topographical Engineers, by a comparison of his own limits with those of the Coast Survey in 1842, and this discovery has since been confirmed by the latter. So rapid has been the accumulation upon the extreme point of the Hook, that the high-water-mark now stands where there was a depth of 40 feet in 1836. The Chamber of Commerce of New York has gratefully acknowledged the communication of this important fact by the present Superintendent.

In Delaware Bay a new and straight channel was discovered, lying parallel to the main ship-channel, more narrow than the latter, but likely to prove serviceable in scant winds, and better sheltered from floating ice. Three channels were opened through the ridges of Cape May, and a passage made known through the "Over-falls." The future changes in the latter, which may prove to be the germ of a new pass to the ocean, will be watched with interest.

The result of the survey in Delaware Bay has been wholly to change the form of the bottom, as it stood on the old charts. Some shoals have been erased altogether, a new one near the deep water of the channel-way has been added, and the limits, shape, depth, and direction of every shoal in the bay have been altered.

In Long Island Sound, Buzzard's Bay, Massachusetts Bay, and Chesapeake Bay, so much has been added to the safety of navigation by laying down positions correctly, and by good sailing-directions, but chiefly by the actual discovery of useful channels or of hidden and unknown dangers, that a list of these additions alone would occupy too much space. In Long Island Sound, a rock having only 13½ feet water

on it, on the Cerberus shoal, was discovered and determined by the brig Washington, in September, 1845; and in the same year three rocks were found in the most frequented part of Buzzard's Bay, by the Gallatin. Changes of the highest importance, which, owing to natural causes, had taken place in the channel-way of the entrance to Mobile Bay, were found out by the Phœnix in 1847.

In the off-shore work, the most valuable discoveries have been made by the hydrographical party employed on the Nantucket Shoals. They deeply concern the navigation, foreign and domestic, of the whole coast, especially the European trade from New York and the West India trade from the Eastern States. The insurance-offices of New York and Boston have publicly acknowledged their obligation for these discoveries.

To this part of the hydrography belongs the *exploration of the Gulf-stream*, an enterprise that originated with the present Superintendent. This is a work of difficulty and time. It was commenced by the hydrographical assistant in command of the brig Washington, in 1845, who obtained bottom near the inner edge of the stream at the depth of seven thousand eight hundred feet, and the marked and rapid change of temperature at this place gave reason to hope, that a curve of similar depths might be traced, corresponding to the inner line of direction of the Gulf-stream, of which any point would be known when crossing, from the characteristic changes of temperature. The latitude (the most easy of the two coördinates to ascertain correctly) being given, the ship's longitude would result sufficiently near the truth to be of essential service in approaching the coast. The deep-sea and surface temperatures were both taken in 1845.

Lieutenant Bache succeeded to the charge of this duty in 1846. Professor Henry has thus spoken of his merits and success: — "In the last report, an account was given of a series of observations on the Gulf-stream, made by Lieutenant Geo. M. Bache, whose life fell a sacrifice to his zeal in the discharge of his duty, and whose loss science was called upon to mourn just as he was commencing, with his accustomed ardor, the investigation of one of the most interesting phenomena of our globe. The results he obtained will be given to the world in another publication, and it will be sufficient to state in this place that he examined three entire sections across the stream. His researches exhibit the remarkable fact, that the whole current of warm water, to the depth of at least four hundred and eighty fathoms, divides itself into two principal branches, separated by a portion of cold water, and that the transition from the cold water, along and next to the coast, is almost instantaneous, as if the two were separated by a nearly perpendicular wall, slightly inclining to the east at the top."

The subject of the tides is now receiving for the first time, in this country, proper attention. The tide-tables on the charts contain all the information as to times, heights, and durations, that is required in practice. Corrected establishments are deduced from the means of the luni-tidal intervals combined for each half-hour of transit. The astronomical problem of the tides is worked out for prominent points, where the observations have sufficiently accumulated.

The mean curves of semi-menstrual inequality of time and height, corrected for the mean annual parallax and declination, are compared with the curves of

observation (freed from the diurnal inequality) at each semi-lunation, and the variations in the times and heights of high water, due to changes in the moon's declination and distance from the earth, are tabulated for the future improvement of the tide-tables.

By the continuance of careful and constant observations, the means will be supplied of adding to the knowledge of the diurnal and solar inequalities, and of studying all other phenomena of the tides. The residual errors that appear in the semi-menstrual curves, after eliminating the effects of parallax and declination, are caused by atmospheric changes. The local influence, therefore, of particular winds, and the general effect of changes in the pressure of the atmosphere, are to be investigated, and enough is already known to prove that the seaman will derive great profit from this part of the labors of the Coast Survey.

The direction and velocity of tidal currents are now carefully determined for the normal condition of the tides, and for their disturbance by winds and storms, and a knowledge of the courses and conflicts of the tides in the harbours and inland waters of the United States (as Long Island and Vineyard sounds) will also result from the comparison of numerous records, kept with a special view to their investigation.

To the preceding account of the operations of the Coast Survey it must be added, that the reduction of the maps to the scale of publication, the engraving and printing of them, are entirely executed in the office at Washington. An exception is made in the engraving of the smaller harbour maps, particularly of the harbours of refuge. They are sometimes placed in the hands of private artists, which serves the double

object of an earlier publication and of encouraging the art of map-engraving in this country.* The office at Washington contains, also, workshops, at which the various instruments of the survey are repaired and made. All the details of the office duties, whether relating to the verification and engraving of maps, or the occupation of the workmen, in the absence of the Superintendent, are under the direction of Captain A. A. Humphreys, of the Topographical Engineers, an assistant.

As the operations of the Coast Survey are numerous and various, and its duties very multiplied in detail and complicated in their connection, it will be readily believed that the direction and adjustment of them, — the instructions, the reports, and communications arising from them, — make the office of Superintendent one of increasing labor and responsibility.

Besides personal attention to these duties, Dr. Bache occupies the station of the primary triangulation at the north, and the observations, whether geodetic, or astronomical, or magnetic, are either made by himself, or under his immediate supervision. In the same manner he has also measured a base-line for Section VIII., on Dauphin Island, and carried the main triangulation across from the Chesapeake to Washington. In a work of such magnitude and extent, occasional indirect contributions to knowledge may be expected, and there is every disposition to make them.

---

* The propriety of publishing to the world the important results of the Coast Survey as soon as obtained was immediately recognized by Professor Bache. In the case of a discovery affecting the general navigation of the coast, like that of the "New South Shoal," a "preliminary sketch," anticipating the complete chart, has been freely distributed. In other cases, information has been disseminated through the press, or furnished by authority to chart-sellers.

A point of interest to the geologist, developed by the operations of the Coast Survey, is the changes that are constantly occurring in different parts of the coast. In this respect its present accurate determinations will furnish in future the means of interesting comparisons. It must be remarked here, also, that too much importance cannot be assigned to this view of the results of the Coast Survey. With regard to most harbours of consequence, the question is repeatedly asked, whether they have undergone any change; and this question can rarely be satisfactorily answered, for the want of a correct standard of comparison. The charts of the Coast Survey will enable the future hydrographer to point out the changes, if any, and the future engineer, in his endeavours to improve or to preserve the channels of navigation, will, by a careful study of these changes, be able to guard against the causes of obstruction, and to coöperate intelligently with natural laws, instead of blindly opposing their effects. The manner in which harbours are affected by the matter held in suspension by the rivers emptying into them, that is, the place and form in which this matter is deposited, will receive such elucidation from the inquiries of the Coast Survey as will assist the counsels of the constructing engineer.

The charts of the Coast Survey exhibit, as far as they go, a view of the topographical formation of the bottom of the sea. Specimens are collected, and preserved in the office, of the bottom in all its varieties, and it was the intention of the late Lieutenant Bache to form a geological map, on which the materials thus collected should appear, in the natural order of their formation. Besides serving as useful indications to the navigator and pilot, they prove to be, when placed

under the microscope, highly interesting to the naturalist. The deep-sea soundings have been examined by Professor I. W. Bailey, of West Point, and have been found to be filled with organisms, particularly those of the calcareous polythalamia, to an amount that is really amazing, hundreds of millions existing in every cubic inch.

"One specimen, from the depth of ninety fathoms, is crowded with remains, most of them large enough to be recognized by a practised eye without the aid of a magnifier." And it is not impossible that, in similar cases, science may supply the mariner with another mode of recognizing the character of the bottom.

In 1847, Professor L. Agassiz, of Cambridge, accompanied one of the hydrographical parties engaged in the off-shore work, by the invitation of its commander, and enjoyed an opportunity of examining the animals inhabiting depths that are rarely accessible.

It proved to be a rich field of discovery. Not only many new species, but several new genera, were added to the known lists; the subject of embryology received fresh illustrations, and a new light was thrown upon the laws of the geographical distribution of animals, showing that in the different depths of the sea, as in the elevations of the land, distinct families have each their assigned and native dwelling-place.

It would lead to but a partial estimate of the value of the Coast Survey, to omit these examples of its incidental benefits to knowledge. There are others upon which there is not room to dwell. The friends of this work have reason to be satisfied with its progress, and it is confidently believed that they may lay aside all apprehensions for its future prosperity. It rests upon the firm support of a controlling public

opinion in the government and among the people. Working, as it does, in a field that is useful and honorable, and being conducted in all its branches with zeal and efficiency, it cannot fail to add every year to the consideration with which it is now regarded, not only at home, but in every country where science and its application to the arts of life are justly appreciated.

EXTRACTS

FROM THE

REPORT OF SUPERINTENDENT OF THE COAST SURVEY

TO THE

SECRETARY OF THE TREASURY,

Showing the progress of that work during the year ending November, 1850.

A general view of the advance made in the work is readily had by comparing the sketches of the previous reports with those of the present. In 1844 four sketches sufficed to show the year's progress, and the operations embraced eight States; this year eleven principal and seventeen subsidiary sketches are required, and the work is in progress in the whole of the nineteen States on the Atlantic and Gulf of Mexico, and the State and Territory on the Pacific.

The plan of operations for the western coast is founded on the character of our present knowledge of it, and is intended to produce successive approximations, from a preliminary hydrographic reconnoissance to a complete survey, the results being made public at each stage of progress.

The general examination for the proper sites for light-houses, and the minute surveys of the sites to determine the character of the lights, heights of the buildings, and other important particulars, are making; the former along the coast generally, the latter at the points specified in the bills making appropriations for the lights and other aids to navigation. The general surveys required for the Engineer department have been directed.

The entrance to Columbia river has been surveyed, and the places for buoys designated; the sites for light-houses at Cape Disappointment, Cape Flattery, and New Dungenness, in Oregon, and in and near San Francisco bay, have been examined and reported upon, and the detailed surveys required in the latter bay are making. A hydrographic examination of the coast from the entrance to Columbia river to Monterey has been made, and a preliminary chart prepared is engraving at the office. The geographical position of Point Conception, the Hatteras of the western coast, has been determined, and the results will soon be received. A detailed account of the work executed and directed will be found under its appropriate head in sections X and XI.

The entrance to Columbia river has undergone very great changes

GIDEON, Printer.

since it was surveyed by the Exploring Expedition in 1841, and the discovery of the "New South Channel" by Captain White has rendered access to the river comparatively easily for vessels drawing not more than seventeen feet. It is computed that within the last eighteen months more vessels have entered this port than in all previous time, and no serious accident has occurred to any one of them. This channel has been carefully sounded out, and a preliminary survey made to above Astoria, the chart of which is reducing at the Coast Survey office, and will be published without delay.

The character of the coast from Monterey to the Columbia river is described by Lieut. W. A. Bartlett in the appendix, No. 2.

The appropriations made at the last session of Congress for the western coast, will, if continued so that the work there receive no check, secure the obtaining of satisfactory results on that very important portion of our coast. The provision of a steam vessel for the hydrography, which was made with wise liberality, at the last session of Congress, will enable us to execute in one year what would require two to four years to effect, less perfectly, with a sailing vessel, or less economically in the same time with several sailing vessels.

The triangulations on the Atlantic coast to which all the other parts of the work are attached, extend unbroken from Casco bay in Maine, to Cedar island, on the coast of Virginia, (1200 miles measuring along the sides of the triangles;) then with an interval of about one hundred and twenty miles, to Hatteras inlet, in North Carolina. They have made progress on the coast of South Carolina, Georgia, and Florida; extend from Mobile bay, Alabama, to Lake Borgne, Louisiana, covering Mississippi sound, and have been commenced in Texas. The other land operations, and the hydrography, are kept as closely up with the triangulation as is practicable. The computation, reduction, drawing, and engraving, are also arranged with a view to keep pace with the field and water work; and the modification of plan, and increase of force, which experience shows to be necessary to carry out this principle, are made as occasion permits. When the back work which had accumulated in 1844 is all published, and the field work and hydrography have reached their greatest extension, so as to present a constant instead of an increasing supply of results each year, it will be comparatively easy to realize the idea of keeping the publication up with the survey. Fifty-five maps and charts, besides preliminary sketches, derived from the new work, are already in the hands of the draughtsmen and engravers, or have been published.

Hydrographic notices have been published by authority of the Treasury Department, or distributed, within the past year, in relation to the following localities and subjects important to the navigating interests of our country:

1. Hatteras shoals, North Carolina.
2. Hatteras inlet, North Carolina.
3. St. Helena sound, South Carolina.
4. St. Andrew's shoals, Georgia.

5. Surveying marks on the Florida reef.
6. General description of the Florida Keys.
7. Shoals off Cape Canaveral, Florida.
8. Sailing directions for the western coast, from Monterey to the Columbia river.
9. Hydrographic notices of the western coast within the same limit.
10. Notes on the south channel of Columbia river.

The statements relating to these subjects are also given in the appendix to the present report; sketches of the following portions of the coast, chiefly of localities, where dangers or facilities to navigation have been found, have been published from time to time as the results were received, and sent to insurance offices, and for gratuitous distribution to the agents for the Coast Survey charts. They are now appended to this report.

1. Sketch of Nantucket shoals as far as surveyed in 1849.
2. Changes in Sandy Hook.
3. Preliminary chart of sea-coast of Delaware and Maryland.
4. Sketch of Beaufort harbor, North Carolina, from reconnoissance.
5. Sketch of Hatteras inlet from reconnoissance.
6. Preliminary chart of Hatteras shoals.
7. Sketch of St. Andrew's shoals from reconnoissance.
8. Sketch of shoals off Cape Canaveral from reconnoissance.

The chart of the reconnoissance of the western coast, from Monterey to the mouth of Columbia river, will be published in about three weeks.*

The following reports in relation to lights, beacons, buoys, &c., will be found in the appendix.

1. In relation to buoys in Massachusetts bay and the Vinyard sound.
2. In relation to buoys in New York harbor.
3. On lights and buoys required in the Chesapeake, north of the Potomac.
4. On buoys in Albemarle and Pamlico sounds.
5. In reference to buoys for Hatteras shoals.
6. Beacons for Florida reef.
7. On a light-house for Sea-horse key, Florida.
8. System of beacons, &c., for Mobile bay, near the city and entrance.
9. Buoys for Cat and Ship island harbors.
10. Light-houses and fog signals for San Francisco bay.
11. Light-house at cape Hancock, or Disappointment, Columbia river entrance.
12. Light-houses for Cape Flattery and New Dungenness, Oregon.

Scarcely any portion of our coast has been thoroughly surveyed which has not yielded important discoveries; the broken ground off Nantucket has proved different in extent and character from what was previously supposed. Davis's shoal on the south, Davis's bank on the east, McBlair's shoals on the north, were, with many minor dangers, previously quite unknown; indeed, the discovery of Davis's shoal was received at first by many seafaring men with suspicion, which would have been

* Was published Dec. 24th.

removed at too heavy a cost, had the fine steamer which touched upon it in 1849, been lost there, or the gallant line-of-battle ships returning from a long foreign cruise, which struck, been sacrificed upon it. Gedney's channel, at the entrance of the great commercial port of New York, and Blake's channel in the Delaware bay, were actually buoyed out before their existence was generally admitted. The discovery of twenty-one feet of water on Mobile entrance bar, by Lieut. Patterson, has effected already important changes in the commerce of that city. Saint Andrew's shoals on the coast of Georgia, the Hetzel shoal off Cape Canaveral, the new channel into Key West, by Lieut. John Rodgers, have been discoveries of value. The existence of Hatteras cove and Hatteras inlet, first publicly announced to navigators by Lieut. Maffitt, may almost be ranked with them. The delineation of the shoals offthe sea-coast of Maryland by Lieut. Lee, those off Cape Hatteras by Lieut. Jenkins, so entirely different in distance from the shore, in extent, and even in most cases in the depth of water supposed to exist upon them, from the data previously furnished by the best authorities, belong to the same class. Such results, though among the most striking of those which the survey yields, are not more useful than the accurate delineation of the harbors, bays, and sea-coast, which the ordinary operations are continually furnishing to navigators.

Some of the differences observed between the recent surveys and those on which former charts were founded, are no doubt the results of actual changes; but there are no facts which prove that any important channel has been obliterated without being replaced by another, or has diminished in depth. The portions of our coast which really do change will be made known in the course of the survey, and the permanent marks furnished by the land work will permit re-examinations to be made whenever required, at a very small expense, and by ordinary nautical means.

It is sometimes forgotten that though the land work yields no discoveries, it is the basis of the whole, and that without it the results on the water would be uncertain in their character. The positions on the water can only be determined by reference to fixed points upon the land, and the places of these on the surface of the earth must be given by the operations of geodesy. Without the land work, a geodetic survey, such as was planned by Jefferson, Gallatin, and Hassler, and such as has been well declared within the year to be the only survey admissible in the present state of science, would dwindle into a nautical reconnoissance. Nearly or quite four-fifths of the whole work, and two-thirds to three-fourths of the out-door work, is on the land—the appropriate work of landsmen, of trained scientific men, and of such only. When a pursuit is in the highest sense of the word a profession, it is ever true that devotion to it unfits the man for a different profession.

The extent of shore line of the coast is the most unexceptionable datum by which to determine the progress of the work from year to year, and its relative economy. If the survey had been commenced in each section at the same time, there would have been no difficulty in the

course of three or four years from the beginning in collecting sufficient statistics to answer such questions, and to determine conclusively the length of time required for the survey of the whole coast. The difficulty of giving an approximate estimate now, results from the very different stages of progress of the different sections. I have, nevertheless, attempted these conjectures from year to year, and kept the records to be checked by the following year's experience. As sections V, VI, and IX have not been under survey long enough to furnish reliable data, I do not propose now to dwell upon these statistics, but in a general way to show what has been gained in time and economy, by conducting the work on its present scale. In 1844 and 1849, the relative proportion of shore line determined, including sea-coast and rivers to the head of tide, was as one to three and four-tenths, (1: 3.4,) while the cost was as one to one and nine-tenths, (1: 1.94,) exhibiting a relative economy of one and three-quarters to one, (1.76 : 1,) or of one hundred to sixty, or a gain of nearly forty per cent, and a diminution in the time of completion to less than one-third.

The extent of shore line determined in the topography is a proper guide to such an estimate; for, if some of the operations, as the hydrography and publication follow it, others, such as the triangulation and astronomical work, precede it.

If the hydrography be taken as the test, it appears that the number of square miles of in-shore work, and the number of soundings in and off shore have been nearly tripled, from 1844 to 1849, the average of the ratios of area and number of soundings being as one to two and five-tenths.

I have heretofore compared the actual cost per square mile of this mode of surveying with that of the public lands; (see report of 1848, Exec. Doc. No. 1, Senate; Exec. Doc. No. 13, H. Reps.,) and the Secretary of the Treasury has instituted a similar comparison in reference to foreign surveys of the same class. Having re-examined the data on which my estimates were founded, and the reports of Assistant R. D. Cutts in relation to the matter, I find my previous conclusions confirmed as to the economy of this method of surveying. The only difficulty, and that by no means an insurmountable one, in applying this method to the public lands of our new territory on the western coast, would be the organization of a body of surveyors competent to execute the details.

Before leaving this part of my subject, I may be permitted to state that the coast of Texas, added to our Union in 1845, would require one year for the entire force of the Coast Survey to complete, according to the statistics gathered in other sections; and that the coast of California and Oregon would require between two and three years of the application of the same entire force. The survey of Texas was commenced in 1846, and will be made to keep pace with that of the other sections; and California and Oregon will constitute two sections, in which the parties may alternate during different seasons. As far as the maps now in our possession may be relied upon, the shore line of Ore-

gon, its rivers to the head of tide, and its bays and sounds, has an extent of 2048 miles; and that of the State of California of 1647 miles. I will explain further on the course proposed, in order to meet the exigencies of the survey of the western coast.

The re-organization of the Coast Survey under legislative authority in 1843 embodied all the experience obtained up to that date, both of which trials had succeeded and of others which had failed; it confirmed and gave the force of law to the union in one corps which had gradually grown up, of civilians, officers of the Army, and officers of the Navy, serving under a neutral department, under which alone they could be united, namely, that having control of matters relating to commerce and navigation. It is easy to see, that without a permanent nucleus for such a work, the objects and aims must be wavering and unsteady, the methods wanting in uniformity from year to year and from party to party, and the results heterogeneous in kind and in form. Confusion and waste would result from such an organization, and the survey would in time be abandoned. The scientific parts of such a work require diligent study and devotion to mathematical and physical science to grasp them in their various bearings, and it is not too much to say, that unless such a work came up to the demands of science and scientific men of the country, it could not long stand. That the theoretical knowledge acquired at the Military Academy should be reduced to practice in the survey by those officers of the Army who have an inclination to similar pursuits, to its advantage as well as to their own, will readily be seen; and up to the point where details would interfere with the duties of the arm to which the officer belongs, Congress has conferred upon the work a right to seek his services. The War Department judges whether they can be granted or not.

The plan of re-organization very properly limited the services of officers of the Navy to the hydrographic parts of the work, the portions which have a professional bearing, and towards which the inclination of a nautical man may turn with professional pride. Experience has fully shown the advantages of this organization in general. The tendency resulting from the variable elements, (the Army and Navy,) is, nevertheless, at times, to lessen the results produced, by the necessity for turning aside from actual work to give instruction, and from the loss of the experience acquired at the expense of the survey by the removal of officers, caused no doubt by the exigencies of their proper service, and yet re-acting severely upon the survey. The experience and knowledge of Humphreys, Johnstone, and Prince of the Army, and of Davis, Patterson, and Porter of the Navy, cannot readily be replaced. A detail may be filled, but the knowledge immediately available is not supplied.

The injunction of the law to employ as many officers of the Army and Navy as practicable in the Coast Survey I have never lost sight of. On the breaking out of the Mexican war, five staff and nine line officers were upon the work. The number of hydrographic parties has been increased from two in 1843, to eight in 1850.

At the close of the war I again applied, through the Treasury Department, for the renewal of Army details, and repeated the application when there was a probability that the ground of refusal might no longer exist. On the detachment of Captain Humphreys, an application was made for the detail of officers of the corps of Topographical Engineers, and asking that at least the vacancies caused by former detachments might be filled. In reply to the Secretary of the Treasury, the Secretary of War stated that it was not in his power to comply with the request, and transmitted a forcible letter from Colonel Abert, showing that every member of his corps was employed. "In fact, replies Col. Abert, it is not in my power to meet the demands of officers in command for the assistants they require; on which account, and on account of other duties, numbers of civil engineers have to be employed in the execution of surveys." When the chief engineer, General Totten, applied through the Secretary of War to the Treasury Department for assistance from the Coast Survey in making the surveys required for the sites of fortifications by the joint commission of Army and Navy officers, I deemed it a most favorable opportunity to urge the detail of officers of the corps of Engineers, and the application was accordingly made to the Secretary of War. The Secretary of the Treasury, while manifesting a disposition to meet the views of the War Department as far as practicable, by giving authority for the surveys on the western coast, urged upon its favorable consideration my application for the detail desired.

That nothing but an urgent demand for officers for their military duties caused this application to be declined must be obvious. When my last application for line officers was refused, the War Department stated, that staff officers would, if practicable, be assigned to the survey. Now that this was found impracticable, I renewed the application for line officers, which has been favorably considered by the War Department, and five officers have been detailed for the service.

The increase in the number of officers of the Navy attached to the Coast Survey has in like manner been carried as far as the Navy Department has found it possible to make the details. Such has been the demand for officers for the more immediate duties of the naval service, that those engaged in hydrographic reductions in the office, were generally detached from the survey, the hydrographic parties were diminished to one-half, or less than one-half, their numbers on coming to the office to reduce their work; and, finally, the additional officers required for the Texas section this winter could not be procured when applied for, the Navy Department stating that, in the present condition of the service, two passed midshipmen, junior to the master who had been ordered, and who stands near the head of the list of passed midshipmen, cannot be detailed. Owing to the same exigencies, the vessel for that section still remains (Dec. 10) without her complement of officers. So great have been the exigencies of the naval service, that more than one-half of the officers attached to the coast survey a year since have been changed. The chiefs of parties feel sensibly the impediment to the

progress of the work under their charge which this rotation produces, and which no exertion of theirs can compensate. With officers and a crew more or less entirely new to the business of surveying, a portion of each season must be spent in teaching instead of working. The present organization affords a school of practice for the young officers of the Navy, and as such is valuable to the country. It must be obvious, however, that in point of economy and expedition, the plan of employing persons regularly trained to the occupation, keeping them steadily at the work, and giving them a compensation proportioned to their knowledge, skill, and industry, would be preferable.

The statistics of the relative economy of the different parts of the work as at present conducted confirm this view of the subject.

The regular progress of the work, according to the plan submitted in successive years and approved, requires the entire appropriation asked for in this report. The sum for the coast of the Atlantic and Gulf of Mexico is less than the general appropriation of last year, when it was necessary to ask an amount in the Deficiency bill for the western coast. That for the Florida reefs and keys is the same at which it was originally fixed by the Senate of the United States; and that for the western coast is the sum appropriated at the last session, less the cost of a steamer included in the former appropriation. With the sums now asked, and which, after examination, have received the sanction of the Secretary of the Treasury, the work laid out can be done, but not with less. Economy and rapidity in obtaining results, the completion of the survey in a reasonable period, are all concerned in keeping the appropriations at their present rate.

The estimates for the next fiscal year are:

For continuing the survey of the coast of the Atlantic and Gulf of Mexico, exclusive of the Florida reefs and keys	$180,000
For the continuation of the survey of the Florida reefs, keys, and coast - - - - - -	30,000
For continuing the survey of the coast of Oregon and California - - - - - - -	150,000

The items of appropriation for the present year were:

1. General appropriation for the survey of the Atlantic coast - - - - - - - - -	186,000
2. For the Florida reefs, and keys, and coast - -	30,000
3. For the western coast, including the cost of a steam vessel	190,000

APPENDIX.

Distribution of the parties of the Coast Survey upon the coast of the United States, during the surveying seasons in different parts of the coast, from November, 1849, *to November,* 1850.

No. of sections of survey.	Limits included in several sections.	No. of parties in section.	Operations.	Persons conducting the operations.	Localities of the several operations.
I.	Passamaquoddy bay to Point Judith, including the coast of Maine, New Hampshire, Massachusetts, and Rhode Island.	1	Reconnoissance.	A. D. Bache, superintendent, and C. O. Boutelle, assistant.	Preparation of stations, examination of work to be done at Richmond's island, harbor of refuge, part of season.
		2	Magnetic observations.	J. E. Hilgard, assistant.	Magnetic variation, &c., for harbor charts from Newburyport, Mass., to Richmond's island, Maine.
		3	Secondary triangulation.	Capt. T. J. Cram, U. S. Topographical Engineers, assis't.	Secondary triangulation from boundary of Massachusetts and New Hampshire to beyond Kennebunk, Maine.
		4	Do.	C. O. Boutelle, assistant, and Geo. A. Fairfield.	Junction with Capt. Cram's work completed, triangulation of Richmond's island harbor, and approaches made and connected with general primary triangulation.
		5	Topography.	H. L. Whiting, assistant.	From near Beverly, Massachusetts, eastward.
				J. M. Wampler, sub-assistant, and R. M. Bache, (trip. p'y.)	Marblehead, harbor and vicinity of Salem.
		8	Do.	J. B. Glück, assistant, and H. Adams, sub-assistant.	Topography near Cape Cod, part of season only.
		9	Hydrography.	A. D. Bache, superintendent.	Inspection of progress of parties.
				Lieut. Commanding Chas. H. McBlair, U. S. Navy, assis't, and Lieut. Com. J. N. Maffitt, U. S. N., assistant, (double party.)	Nantucket shoals, Muskeget channel completed, off-shore work between Gay Head and No Man's land and Block island, Wellfleet harbor, Cape Cod, Salem, and Beverly harbors.

211

9

+ Isaac H. Adams.

Appendix.—Continued-

No. of sections of survey.	Limits included in several sections.	No. of parties in section.	Operations.	Persons conducting the operations.	Localities of the several operations.
		11	Hydrography.	Lieut. Com. Maxwell Woodhull, U. S. Navy, assistant.	Tidal and current observations in Martha's Vineyard sound and Buzzard's bay; hydrography of Richmond's island harbor of refuge, Casco bay, Maine, and approaches.
			Views.	John Farley, assistant.	Views of entrance to Narragansett and Buzzard's bays, &c., for coast chart, eastern series No. 1, part of season.
II.	Point Judith to Cape Henlopen, including the coast of Connecticut, New York, New Jersey, Pennsylvania, and Delaware.	1	Magnetic observations.	George Davidson, sub-assistant.	Determination of constants of magnetic instruments in early part of year.
		2	Auxiliary triangulation.	Professor A. G. Pendleton, United States Navy.	Triangulation in connexion with verification work of hydrography, south side of Long Island, part of season.
		3	Topography.	H. L. Whiting, assistant.	Topography of mouth of Connecticut river, and of City island, re-surveyed; shore line of Sandy Hook traced for progress of the Hook, part of season.
		4	Hydrography.	Lieut. Comg. Maxwell Woodhull, U. S. Navy, assistant.	Verification work on south side Long Island, from Ketchabonneck to Neapeague. Examination of Prince's and Diamond reef, &c., N. Y. harbor, part of season.
			Do.	L. F. Pourtales, sub-assistant.	Examination of specimens of bottom of sea in section II.
III.	Cape Henlopen to Cape Henry, including the coast of Delaware, Ma-	1	Primary triangulation and secondary triangulat'n.	Edmund Blunt, assistant, S. A. Gilbert, sub-assistant.	Continuation of the triangulation of the Chesapeake to Wolftrap station. Mr. Gilbert, assistant from August to close of September.

	ryland, and Virginia.	2	*Primary triangulation and astronomical and magnetic observations.*	*A. D. Bache, superintendent, Geo. W. Dean, sub-assistant.*	*Continuation of triangulation from Chesapeake to Capitol and Observatory, Washington, &c., astronomical and magnetic observations at three stations.*
			Reconnoissance.	A. D. Bache, superintendent. Thomas McDonnell,	Line from Webb's to Hill's, opened, &c., early part of season.
		3	Triangulation and astronomical work.	S. C. Walker, assistant, L. F. Pourtales, sub-assistant.	Triangulation and astronomical observations at Seaton station. Telegraphic operations for diff. of longitude of Charleston and Washington, &c.
		4	Secondary triangulation.	John Farley, assistant.	Continuation of triangulation of outer side of Eastern Shore peninsula, from work of last year to Cedar island, Virginia.
		5	Topography.	R. D. Cutts, ass't in charge, work executed by John Seib and S. A. Wainwright, (d'ble party.)	Eastern shore of Maryland, western shore of Virginia, between the Potomac and Rappahannock.
		7	Do.	Geo. D. Wise, assistant.	Examination of Patapsco, topography of outer shore of peninsula of Eastern Shore to Lonesome hill, Virginia.
III.	Cape Henlopen to Cape Henry, &c. continued.		Topography.	J. B. Glück, assistant.	Verification work in Patapsco, part of season.
			Do.	Capt. A. A. Humphreys, United States Topographical Engineers, assistant.	Inspection of work on Patapsco.
		8	Hydrography.	Lieutenant Commanding S. P. Lee, United States Navy, assistant; Lieutenant Commanding B. F. Sands, (double party.)	Hydrography of outer coast, from Green run Md., to Lonesome hill, Virginia. Hydrography of Chesapeake, from work of last year to line Windmill point, Nandua creek. Sailing directions for Chesapeake, and list of buoys, &c., for bay north of Potomac.
IV.	Cape Henry to Cape Fear, coast of part of Virginia and North Carolina.	1	Main and secondary triangulation.	Capt. A. A. Humphreys, United States Topographical Engineers, assistant.	Base on Bodies' island, connected with main triangulation verification of tertiary triangulation of ocean shore towards Hatteras, part of season.
		2	Secondary and tertiary triangulation and topography.	J. J. S. Hassler, assistant.	Secondary triangulation of Currituck sound, and tertiary of Chowan Cusha and Roanoke rivers continued; drawings completed of topography of Albemarle sound, &c.

214

Appendix.—Continued.

No. of sections of survey.	Limits included in several sections.	No. of parties in section.	Operations.	Persons conducting the operations.	Localities of the several operations.
		3	Tertiary triangulation.	J. Hewston, sub-assistant, and A. S. Wadsworth, jr.	From Bodies' island base, south, to near Hatteras inlet.
		4	Tertiary triangulation and topography.	C. P. Bolles, sub-assistant.	Triangulation of Beaufort harbor made, and shore line traced.
		5	Hydrography.	Lieut. Commanding Thornton A. Jenkins, United States Navy, assistant.	Off-shore soundings (deep sea) from Capes of the Chesapeake to Cape Hatteras; hydrography of Hatteras shoals and cove; examination of Hatteras inlet. Gulf stream work in this and section V.
		6	Do.	Lieut'nt Commanding Richard Wainwright, United States Navy, assistant.	Hydrography of Albemarle and Croaton sounds of Alligator and North rivers. Reconnoissance of Hatteras inlet.
		7	Do.	Lieut. Commanding J. N. Maffitt, United States Navy, assistant.	Hydrographic reconnoissance of Beaufort harbor, North Carolina.
V.	From Cape Fear to the St. Mary's river, coast of South Carolina and Ga.	1	Measurement of a base.	A. D. Bache, superintendent; C. O. Boutelle, assistant; and C. P. Bolles, sub-assistant.	Measurement of base on Edisto island; completed.
		2	Main and secondary triangulation, and astronomical and magnetic observations.	C. O. Boutelle, assistant. George Davidson, sub-assistant.	Astronomical and magnetic observations at north end of Edisto base; connexion with main triangulation commenced; secondary triangulation of North Edisto inlet made.
		3	Secondary triangulation.	C. O. Boutelle, assistant, C. P. Bolles, sub-assistant.	Measurement of a preliminary base near Savannah; secondary triangulation from north end of Hutchinson's island to Elba island, Savannah river.
		4	Hydrography.	Lieut. Com. J. N. Maffitt, U. S.	Hydrography of Charleston harbor and ap-

				Navy, assistant.	*proaches; reconnoissance off St. Helena sound.*
			Do.	*Lieut. Com. John Rodgers, U. S. Navy, assistant.*	*Reconnoissance of St. Andrew's shoals.*
				A. D. Bache, superintendent.	Inspection of progress of work.
VI.	St. Mary's river to St. Joseph's, coast of Florida.	1	Reconnoissance.	F. H. Gerdes, assistant.	Reconnoissance of Florida keys and of part of the main, from Cape Florida to the Tortugas completed; preliminary base near Cape Florida made. Reconnoissance for base near Cape Sable made. Reconnoissance near Cedar keys commenced.
		2	Astronomical and magnetic observations, and secondary triangulation.	J. E. Hilgard, assistant.	Observations for latitude and azimuth, magnetic declination, &c., at Key Biscayne. Preliminary base near Cape Florida measured. Triangulation of Key Biscayne bay and of Florida reef adjacent, commenced; part of season.
		3	Secondary triangulation and topography.	H. L. Whiting, assistant, J. H. Adams, sub-assist., (double party.)	Triangulation near Key Biscayne continued. Topography of Key West and of adjacent keys executed.
		5	Hydrography.	Lieut. Com. John Rodgers, U. S. Navy, assistant.	Reconnoissance of Cape Canaveral shoals executed. Hydrography of Key West harbor and approaches nearly completed.
		6	Do.	Lieut. Com. James Alden, U. S. Navy, assistant.	Reconnoissance of Cedar keys. Recommendation for a light-house.
VIII.	Mobile bay to Vermillion bay, coast of Alabama, Mississipi, and part of Louisiana.	1	Primary and secondary triangulation.	F. H. Gerdes, assistant.	Primary triangulation continued to Chandeleur islands, part of season.
		2	Secondary triangulation.	C. M. Eakin, assistant, S. A. Gilbert, sub assistant.	Triangulation of part of Mobile delta, connexion of Mobile bay and outer coast made; of Mississippi sound and adjacent bays, continued westward into lake Borgne.
		3	Topography.	W. B. Greenwell, assistant.	Topography of west shore of Mobile bay and of delta completed; of north shore of Mississippi sound continued westward of Pascagoula.
		4	Hydrography.	Lieut. Comg. James Aden, United States Navy, assistant.	Hydrography of Mobile delta completed; of Mobile bay nearly completed.

Appendix.—Continued.

No. of sections of survey.	Limits included in several sections.	No. of parties in section.	Operations.	Persons conducting the operations.	Localities of the several operations.
IX.	Vermillion bay to the boundary, part of La. and Texas.	1	Main and secondary triangulation.	R. D. Cutts, assistant, S. A. Gilbert, sub-assistant.	Main and secondary triangulation continued westward and southward from Galveston bay; preliminary base on Galveston island measured; triangulation of East bay continued.
				James S. Williams, assistant, Spencer C. McCorkle, sub-ass't.	Under instructions to continue foregoing work.
		2	Topography.	J. M. Wampler, sub-assistant.	Topography of Galveston Lower bay completed, and of western shore of Upper bay.
		3	Hydrography.	Lieut. Com'g A. S. Baldwin, United States Navy, assistant.	Hydrography of approaches to Galveston harbor nearly completed.
X&XI	Western coast of the United States, Oregon and California.		Reconnoissance, main and secondary triangulation and topography.	R. D. Cutts, assistant, Augustus S. Rodgers, aid.	Under instructions to make minute surveys of sites for light-houses in San Francisco bay; to make general surveys required by Engineer department in same bay; to execute land work of harbors of Bodega, Monterey, Santa Barbara, and San Diego in California; and of Columbia river (to Fort Vancouver) in connexion with general survey of coast in Oregon, and to unite in general reconnoissance from San Francisco to San Diego.
		2	Geographical determinations.	George Davidson, assistant. John Rockwell.	Latitude and longitude of Point Conception, under instructions to determine those of Monterey, of southern entrance to Santa Barbara sound, of Trinity bay, Straits of Fuca, &c.

	3	*Topography.*	*A. M. Harrison, sub-assistant.* James S. Lawson.	*Under instructions to execute topography of sites of light-houses at Monterey, Point* Conception, and San Diego; topography in connexion with work of other parties.
	4	Hydrography.	Lieutenant Commanding W. P. McArthur, United States Navy, assistant.	Hydrography of Mare island straits, San Pablo bay. Reconnoissance for sites of light-houses at Cape Disappointment and New Dungeness; preliminary survey of entrance to Columbia river, and determination of places for buoys. General reconnoissance of coast from Columbia river to Monterey. Report of sites for light-houses at entrance to San Francisco bay and harbor. Under instructions to examine sites for light-houses at Monterey, Point Conception, and San Diego, and to unite in foregoing operations.

212

218 FROM THE

ASTRONOMICAL JOURNAL.

No. 7.

VOL. I. CAMBRIDGE, APRIL 20, 1850. NO. 7.

NOTE FROM PROFESSOR BACHE TO THE EDITOR.

Washington, March 9, 1850.

DEAR SIR,—

By authority from the Honorable Secretary of the Treasury, I inclose you, for the *Astronomical Journal*, the abstract of a report of SEARS C. WALKER, Esq., one of the assistants of the United States Coast Survey, on the recent telegraph operations for longitude, including the experiments for the measurement of the time of propagation of the hydro-galvanic current in the telegraph lines of the United States.

A. D. BACHE,
Superintendent U. S. Coast Survey.

ON THE RECENT TELEGRAPH OPERATIONS OF THE U. S. COAST SURVEY.

BY SEARS C. WALKER,
ASSISTANT U. S. COAST SURVEY.

With a Copperplate.

TO PROFESSOR A. D. BACHE, LL. D,
SUPERINTENDENT UNITED STATES COAST SURVEY.

DEAR SIR,—In compliance with your instructions, I beg to submit an abstract of my report of January 31, on the experiments of the Coast Survey for determining the small correction of the local automatic registers of the transits of stars, used for determining the longitudes of the stations.

The experiments of Mr. WHEATSTONE, made with apparatus devised and executed by Mr. SAXTON, give the velocity of propagation of the waves of frictional electricity, similar to that of radiant light or heat. The smallness of the tension of the hydro-galvanic current had induced Professor HENRY, in 1846, and Professor LOVERING, in 1847, to express to me their opinion, that its velocity of propagation would be much smaller than that of light, heat, and frictional electricity, and that it would, perhaps, be measurable by the processes then in use in the telegraph operations of the Coast Survey. In 1846–48, the experiments, though carefully examined for this purpose, gave no indications of a measure of this velocity. The introduction of the automatic circuit-breakers, for graduating the registers, gave hopes of better success, and the operations of the 23d of January, 1849, for determining by the new process the longitudes of Cambridge, New York, and Philadelphia, indicated discrepancies in the local readings of the dates of transits of stars, attributable only to the hypothesis of a sensible value for the propagation of the hydro-galvanic waves. This interpretation of the phenomenon was suggested in my report of February 21, 1849, of which an abstract was published in the Proceedings of the American Philosophical Society for March 16, 1849. A reprint of this abstract may be found in the six hundred and seventy-sixth number of the *Astronomische Nachrichten* of Professor SCHUMACHER. A critical notice of this article from the pen of Professor STEINHEIL of the Royal Academy of Bavaria, was published in the six hundred and seventy-ninth number of the above-mentioned journal, which has been translated and published with comments by Dr. GOULD. Mr. STEINHEIL, whilst giving his weighty sanction to the mode of conducting the experiment, and interpreting its results, expresses a wish for a further accumulation of data, with a view to increase of precision in the measurement, and invites the attention of the Germans to this subject. I have not yet heard whether these experiments have been repeated in Europe; but I was satisfied from the inspection of the work of January 23, 1849, that the laws which govern these local discrepancies of the readings must be studied by the astronomer proposing to determine longitudes by the telegraph, with as much care as he does those of the aberration of light. Accordingly, with your approbation, on the nights of the 31st of October and the 5th and 21st of November, the arrangements were made, both with reference to the determination of the difference of longitude

between Seaton Station and the Cincinnati Observatory under Professor MITCHEL, and to the measurement of *wave-time*. The former element, the longitude of Cincinnati, is an important item in the Coast Survey operations, as affording the readiest means of connecting Washington and New Orleans.

My report of January 31 is confined to the discussion of the latter operation, namely, the measurement of *wave-time* on the line between Washington and Cincinnati. The first part of these experiments consisted in the double graduation of the registering fillets by the SAXTON circuit-breaking clock at Seaton Station, and by that of Professor MITCHEL at Cincinnati, for a period of an hour or more. The second part consisted in the imprinting of the signal pauses or electrotomes by the operator at the Cumberland office, for a term of twenty minutes, while both clocks were graduating the fillets at all the stations. The third part consisted in the repetition of the same experiment by the operator at Wheeling. The last two portions of this night's work have, by your direction, been referred for discussion to Mr. C. CULMANN of the Royal Bavarian Engineers, now on a professional tour through this country.

Before presenting the results of the first portion, namely, the direct comparison of the two clock-scales on the respective registering fillets of paper, it is proper to submit a brief statement of the analytical theory of telegraph operations, which has been given in my successive reports since 1846.

The mode of effecting the automatic register of the dates of events, by means of the galvanic current, has been described at length in my report of December 15, 1848, and in my subsequent report read to the American Association for the Advancement of Science, in August, 1849. The drawings of Figures 1 and 2, in the accompanying plate, exhibit the peculiarities of the armature movements, and the dimensions of the telegraph line. Figure 3 shows a specimen of a graduated paper fillet, with its automatic *pauses* and *lines*, on which an arbitrary pause $F\,G$ has been inserted by an electrotome made at a signal station. I will now proceed to the formation of the equations of condition for computing the effect of wave-time on the local readings of an arbitrary signal or pause, imprinted on an automatic clock-scale, as exhibited in the local registers. For this purpose we have,—

AB, CD, &c. = the clock lines or times of continuation of the active galvanic currents (*electropœas*) on a continuous circuit. These may be compared to *syllables* in the case of propagation of *waves* of *sound* in the air. The intervening pauses are analogous to the intervals of *silence* between *sounds*.

BC, CD, &c. = the clock-pauses (*electrotomes*), or interruptions of the galvanic current.

$F\,G$ = the *signal* pause or electrotome, made by the operator, by tapping on the *break-circuit* key.

$D\,F$ = the *electrotome* scale-reading of the beginning, F, of the signal pause.

$E\,G$ = the *electropœa* scale-reading of the end, G, of the same signal pause.

$D\,H$ = the measure of the reading of a second on the *electrotome* scale.

$E\,I$ = the same for the *electropœa* scale.

b = the equivalent of $D\,F$ in time $= \frac{D\,F}{D\,H}$.

m = " " " $E\,G$ " $= \frac{E\,G}{E\,I}$.

$l = \frac{E\,F}{D\,H}$.

$L = \frac{G\,H}{E\,I}$.

l_0, L_0, b_0, and m_0 = the absolute values of l, L, b, and m.

a, a_1 = the miles traversed respectively by the clock- and signal-waves in going to the receiving station.

x = the time of propagation of the hydro-galvanic wave through one mile of a, or a_1.

α, α_1 = the time of decrease or waning of the magnetic force of attraction, after the first electrotome wave reaches the receiving magnet, before the force falls below that of the spiral spring (increased by friction), which, by drawing back the armature, severs the metallic connection of the local circuit, for the *clock*- and *signal*-electrotomes. Professor HENRY's researches have shown that these quantities α and α_1 are increased by the action of the secondary current, which retards this waning the more, the greater the length of the telegraph line.

β, β_1 = the times of induction of magnetism after the electropœa wave reaches the receiving magnet, before the attraction of the magnet upon the armature severs it from contact with the outer brace, for the *clock*- and *signal*-waves respectively. These quantities are also increased by the action of the secondary current.

γ, γ_1 = time of the armature traversing the *pass* inwards, after motion commences posterior to the clock and signal electropœas.

δ, δ_1 = the outward *pass times* for the clock and signal electrotomes.*

Then we have for the conditional equation from the clock and signal electrotomes and electropœas, respectively, the expressions,

I.
$$0 = (a_1 - a)\,x + (\alpha_1 - \alpha) + (b_0 - b)$$
$$0 = (a_1 - a)\,x + (\beta_1 - \beta) + (\gamma_1 - \gamma) + (m_0 - m).$$

Also for any other receiving station, marking the letters with an accent above,

II.
$$0 = (a_1' - a')\,x + (\alpha_1' - \alpha') + (b_0 - b')$$
$$0 = (a_1' - a')\,x + (\beta_1' - \beta') + (\gamma_1' - \gamma') + (m_0 - m').$$

* The quantities analogous to α, β, γ, and δ for the local magnet and register are omitted, because they are the same for the clock and signal electrotomes and electropœas, and their difference is null.

Subtracting the equations (II.) from (I.) to eliminate b_0 and m_0,

$$\text{III.}\quad \begin{aligned} 0 &= \left[(a_1 - a) - (a_1' - a')\right] x + \left[(\alpha_1 - \alpha) - (\alpha_1' - \alpha')\right] + (b' - b) \\ 0 &= \left[(a_1 - a) - (a_1' - a')\right] x + \left[(\beta_1 - \beta) - (\beta_1' - \beta')\right] + (\gamma_1 - \gamma) - (\gamma_1' - \gamma')\right] + m' - m). \end{aligned}$$

And by the mean of expressions (III.),

$$\text{IV.}\quad 0 = \left[(a_1 - a) - (a_1' - a')\right] x + \tfrac{1}{2}\left[(\alpha_1 - \alpha) - (\alpha_1' - \alpha')\right] + \tfrac{1}{2}\left[(\beta_1 - \beta) - (\beta_1' - \beta')\right] + \tfrac{1}{2}\left[(\gamma_1 - \gamma) - (\gamma_1 - \gamma)\right] + \tfrac{1}{2}\left[(b' - b) + (m' - m)\right].$$

From (III.) and (IV.), we derive the equations of condition,

$$\text{V.}\quad \begin{aligned} 0 &= a x + y + B \\ 0 &= a x + z + u + M \\ 0 &= a x + \tfrac{1}{2}(y + z + u) + \tfrac{1}{2}(B + M) \end{aligned}$$

where

$$\text{VI.}\quad \begin{aligned} a &= \left[(a_1 - a) - (a_1' - a')\right] \\ y &= \left[(\alpha_1 - \alpha) - (\alpha_1' - \alpha)\right] \\ z &= \left[(\beta_1 - \beta) - (\beta_1' - \beta)\right] \\ u &= \left[(\gamma_1 - \gamma) - (\gamma_1' - \gamma)\right] \\ B &= b' - b \\ M &= m' - m \\ \tfrac{1}{2}(B + M) &= \tfrac{1}{2}\left[(b' - b) + (m' - m)\right] \\ &= \tfrac{1}{2}\left[(L_1 - L_1') - (l - l')\right].^{*} \end{aligned}$$

The import of the terms y, z, and u may be gathered from the drawing of Fig. 1. That of a, from the tracing of the telegraph line from Washington to Cincinnati, via Wheeling, in Fig. 2. The experiments were not so arranged as to present a full discrimination between the resistance of the wire, the ground, and the batteries. This must be the subject of future experiments.

In the accompanying plate, Fig. 1,—

A, B, and C are stations on the main line; A is that of the receiving magnet M. B and C are more remote successively.

E is the main-line battery.

M is the receiving magnet.

F is the armature.

O is the outward limit of armature distance.

I is the inner, preventing absolute contact of F and M.

$O\ I$ is the *pass*, so called, between the inner surfaces of O and I. Both have adjusting screws for position.

S is the spiral spring.

K, the key for its adjustment for tension.

$I\ D\ F$ is the local circuit.

D is the local battery.

It may be seen from the drawing, that when the armature-beam F is in contact with I, the local circuit is complete. But the departure of F through an indefinitely small space breaks the metallic contact with I, and thus breaks the local circuit. When the adjustments are all properly made, F, on leaving I, departs through the *pass* to contact with O, and there remains, till the circuit is restored on the main line, when M, again becoming a magnet, attracts F, and draws it back from O, through the *pass* again, to contact with I, restoring thereby the local circuit.

This is called the *make-make* arrangement, or $F\ I$ connection.

The I end of the local circuit may be removed to O, and giving the *make-break* arrangement, or the $F\ O$ connection.*

Let us now suppose that the adjustments of position of O and I, and of tension of S, are made to suit the intensity of the current from the battery, E, acting on the magnet, at the receiving station A, so that an electrotome at A causes the armature to depart through the pass to I, and an electropœa, or restoration of circuit, again draws F through the pass back to contact with I.

Now, whenever the meteorological condition of the atmosphere is such, that a friction-electrical machine would work well, the line, if properly insulated, also works well. Such a state of the atmosphere occurs in this country, when a northwest wind prevails, with cool weather or frost, after the clearing up from a northeasterly storm, or from a south or southwesterly rain, or snow. Such have been the nights of our experiments for wave-time.

In this case the magnet being adjusted for A's *dots*, as it is called, B's and C's dots are well received by A, and so on, for all the other stations, whether considered as *dotting* or *receiving* stations.

On bad working nights, a new adjustment is required for the receiving-magnet appurtenances for each change of the dotting station. Such nights are unfit for the experiment, and have not been used for the purpose. They are unsatisfactory, even for the exchange of star-signals.

The fact that each receiving magnet, on the 31st of October and 21st of November, could receive, in the same second of time, the dots at all the stations from Washington to Cincinnati, is conclusive in favor of the good insulation of the line, and of the good meteorological condition of the atmosphere. Still, as no insulation is perfect, and as no meteorological state of the atmosphere is perfect, let us conceive that there was at each station a slight change of residual galvanic action of the current on the magnet, from change of place of the dotting station. This change, we know, both from theory and experience, must be an increase of residual action of the magnet for increase of distance of the dotting station when external to the battery, still, however, varying within the limits suitable for good action of the receiving magnet. When there are several batteries on the

* The second form is more easily measured than the first. It does not afford the same facilities for the separate measurement of B and M.

* This kind of connection has recently been used by Mr. J. J. Speed, of Detroit, in his ingenious invention of the universal relay apparatus.

line, a dotting station may be external to one, and internal to another. In this case, the ordinary principle in mechanics of the composition of forces may be applied, and the relative effect of the dispersion of the galvanic force by imperfect insulation along the lines traversed by the clock- and signal-waves may be either an increase or diminution of the residual tension, after the electrotome.

Now let us make,—

$W =$ the number of grains that the receiving magnet, M, will lift, when at the inner limit, I, of distance from the poles of the magnet, by the total intensity of the galvanic current from the battery, E, acting at the receiving station.

$W_1 =$ the number of grains of lifting destroyed by the electrotome at the receiving-magnet station.

W_2, W_3, &c.* = the same for the second and third, &c., stations, in the order of distance from the receiving station external to the battery.

R_1, R_2, &c. = the residual weight, $(W - W_1)$, $(W - W_2)$, &c., lifted after the first, second, third, &c., electrotomes.

$Q =$ the number of grains of attraction of the magnet M, for the contact, $F\,I$, required to balance the antagonist tension of the spiral-spring.

$V =$ the friction to be overcome by the movement of the armature F.

The first condition required and actually fulfilled on the 31st of October, in order that the armature, F, should go promptly through the *pass* from I to O, on any *electrotome* at the 1st, 2d, &c., or nth station, is,

$$(Q - V) > R_n.$$

A similar condition, viz.

$$(Q + V) < W'$$

prevails with respect to the *electropœa*, when the armature is at the $F\,O$ contact. In this case, the total intensity, W, for the $F\,I$ contact, becomes W' for the $F\,O$ contact, and overcomes the actual spiral-spring tension, W', and the armature friction V' for the same. This condition was also fulfilled on the 31st of October.

Again, let us call,—

$\varphi\, W_n\, dt =$ the decrement of attractive force (for the $F\,I$ contact) in an element of time for the nth electrotome, which in a finite portion of time, t, destroys the attractive force W_n.

$\varphi'\, R_n'\, dt =$ the increment of attractive force (for the $F\,O$ contact) in an element of time for the nth electropœa, which in a finite portion of time, t', augments the attractive force from R_n' to W_n'.

Then, since the armature F breaks the $F\,I$ connection or local circuit, when the force W has diminished to $W - V$, and breaks the $F\,O$ contact, when the force R_n' has increased to $(Q' + V')$, we have the expressions

$$\alpha_n = \int_{W}^{Q-V} (\varphi\, W_n)\, dt$$
$$\beta_n = \int_{R_n'}^{Q'-V'} (\varphi'\, W_n')\, dt \qquad \text{VII.}$$

where n represents the order of increase of distance of the dotting from the receiving station in the direction above ground external to the battery.

The quantity γ_n for each receiving station must be considered as constant for the period of one or two seconds, during which the experiment lasts, whatever be the locality of the dotting stations; these times of inward vibration of the armature (technically called the inward *pass*) are, like the successive vibrations of a pendulum, *isochronous*. The adjustment of the spiral-spring, and outer and inner braces, is the same. The arc of vibration is the same. The spiral-spring tension is the same. The force of attraction $(Q' + V')$ at which the vibration commences is the same. The remaining induction of attractive force of the magnet, from $(Q' + V')$ to the maximum, takes place during the vibration. We may, therefore, assume that

$$u = \left[(\gamma_1 - \gamma) - (\gamma_1' - \gamma')\right] = 0. \qquad \text{VIII.}$$

Let us make,—

$P =$ the apparent duration of a pause, as read on the graduated fillet of paper.

$P_0 =$ the actual duration of the electrotome, or separation of the metallic closing of the main circuit. Then,

$$P = P_0 - \alpha + (\beta + \gamma)$$
$$m = \left[(P_1 - P) - (P_1' - P')\right] = \left[(z + u) - y\right] = z - y$$
$$\theta = y - z.$$

And,

$$0 = \theta + m. \qquad \text{IX.}$$

Also let

$$\varrho = \left[(R_1 - R) - (R_1' - R')\right]$$
$$\theta = F(\varrho) = \text{function of } \varrho. \qquad \text{X.}$$

The character of this function of ϱ depends upon the nature of the integrals of (VII.). It must, I think, be apparent from the inspection of these integrals, that the greater the value of the residual tension R_n after the nth electrotome, the greater that of α_n, or the waning time from a magnetic force of W down to that of $(Q - V)$.

This follows from the general law of dispersion, whether of ponderable or of imponderable fluids, that the rapidity of this dispersion increases with the head of pressure. A similar course of reasoning leads to the conclusion, that while an increase of R_n increases α_n, a consequent increase of R_n' diminishes β_n, because the quantity of magnetism $\left[(Q' - V') - R_n'\right]$ to be induced previous to the commencement of the returning vibration of the armature is diminished by the increase of R_n'. These circumstances authorize the following conclusions with respect to the quantity $\left[\theta = F(\varrho) = y - z\right]$:—

1st. The function $F(\varrho)$ is of such a nature that θ becomes 0, when ϱ becomes 0.

* This decrease of W_n takes place only on the side above the ground external to the battery. On the interior side, each electrotome destroys the total intensity W. In a compound circuit, the same electrotome may be *total* for the effect of one battery, and only *partial* for that of another. In this case, the principle of the composition of forces applies.

2d. That for a positive value of ϱ, θ is positive for a double reason, viz. that the value of y is positive, and that of z is negative.

3d. That for a negative value of ϱ, θ is negative for a similar double reason.

Let us now suppose, that the selection of the additive and subtractive readings is so made in the conditional equation (V), that the value of x will be positive, when B, or M, or $\frac{1}{2}(B+M)$, is positive, then the quantity $\Sigma\, a\, x$ is *cumulative*, and increases with the number of nights' work, and with the number of stations compared together each night.

On the contrary, the quantities $\Sigma\, y$, $\Sigma\, z$, $\Sigma\, u$, $\Sigma\, \frac{1}{2}(y+z+u)$, instead of being cumulative, tend continually, by the increase of $\Sigma\, a$ (which is their divisor in the conditional equations), to produce the results, —

$$\text{XI.}\quad \begin{aligned} \Sigma\, \frac{x}{a} &= 0 \\ \Sigma\, \frac{y}{a} &= 0 \\ \Sigma\, \frac{z}{a} &= 0 \\ \Sigma\, \tfrac{1}{2}\left(\frac{x}{a}+\frac{y}{a}+\frac{z}{a}\right) &= 0. \end{aligned}$$

The conditions of (XI.) are the natural result of the fact that ϱ is an accidental quantity, sometimes positive, and sometimes negative, dependent upon the temporary condition of the line, and its multitude of connections in the offices, and on the instantaneous meteorological circumstances along the line. The rapidity of the convergence of the quantities in (XI.) towards zero increases with the goodness of the line, and with that of the combination of meteorological circumstances.

These theoretical conclusions in (XI.) have not yet been submitted to direct experiment, for want of apparatus for measuring the absolute durations of the *clock* and *signal electrotomes*. The conditional equation of (IX.), which depends upon the relative duration of the measured pauses, (their absolute duration being eliminated,) for the experiments yet made in the Coast Survey operations, very nearly fulfils the condition of compensation involved in the equations of (XII.), viz., that for the separate vanishing of $\Sigma\left(\frac{y}{a}\right)$, $\Sigma\left(\frac{z}{a}\right)$, $\Sigma\left(\frac{u}{a}\right)$, we have also

$$\Sigma\left(\frac{\theta}{a}\right) = \Sigma\left(\frac{x-(z+u)}{a}\right) = \Sigma\left(\frac{y-z}{a}\right) = 0. \quad \text{XII.}$$

The following table comprises the values of θ and a, as far as they have yet been obtained. The Harper's Ferry and the Wheeling registers have been omitted. The former was adjusted for too long a *pass* of the receiving magnet, thereby introducing an unnecessary source of error. The latter had the *pass* so short, that the readings of the *pauses* were indistinct. In practice, both extremes should be avoided. The retention of these registers, however, would not have made any sensible change in the mean result.

TABLE I.

Collection of the Values of θ from the Coast Survey Experiments.

No. of Cases.	Date. 1849.	Clock Station.	Signal Station.	Station for P.	Station for P'.	$x-(z+u)$ θ s.	No. of Results. n	Probable Error of Group. e s.	Relative Miles of Wave Space. a
1	Jan. 23	Phil.	Phil.	Phil.	Wn.	—0.014	16	±0.007	0
2	"	"	"	"	Camb.	— .029	11	.007	0
3	"	"	"	"	N. Y.	— .026	11	.007	0
4	"	"	"	Wn.	Camb.	— .007	11	.006	0
5	"	"	"	"	N. Y.	+ .014	11	.008	0
6	"	"	"	N. Y.	Camb.	— .044	6	.011	0
7	"	"	Cd.	Phil.	Wg.	— .014	17	.005	150
8	"	"	"	"	Camb.	+ .020	17	.006	900
9	"	"	"	"	N. Y.	+ .050	17	.008	400
10	"	"	"	Wn.	Camb.	+ .023	10	.005	750
11	"	"	"	"	N. Y.	+ .033	18	.005	250
12	"	"	"	N. Y.	Camb.	— .027	2	.006	500
13	"	"	N. Y.	Phil.	Wn.	+ .005	7	.010	0
14	"	"	"	"	Camb.	+ .029	6	.010	400
15	"	"	"	"	N. Y.	+ .002	7	.010	400
16	"	"	"	Wn.	Camb.	+ .020	6	.010	400
17	"	"	"	"	N. Y.	— .003	8	.010	400
18	"	"	"	N. Y.	Wn.	+ .050	6	.010	0
19	Oct. 31	Ci.	S. S.	Ci.	S. S.	+ .052	88	.003	806
20	"	"	"	"	Cd.	+ .008	12	.005	161
21	"	S. S.	Cd.	"	S. S.	+ .053	29	.004	421
22	"	"	"	Cd.	Ci.	— .037	36	.004	155
23	"	"	"	"	S. S.	+0.010	34	±0.004	266

No. of Cases.	Date. 1849.	Clock Station.	Signal Station.	Station for P.	Station for P'.	$x-(z+u)$ θ	No. of Results. n	Probable Error of Group. e	Relative Miles of Wave Space. a
						s.		s.	
24	Oct. 31	S. S.	Wg.	Ci.	S. S.	+0.047	12	±0.005	421
25	"	"	"	"	Cd.	+ .031	12	.005	155
26	"	"	"	Cd.	S. S.	+0.025	17	±0.005	266
For 26 cases					$\Sigma\theta =$	+0.271	427		7201
Indiscriminate mean					$\theta =$	+0.010			
					$\frac{\Sigma\theta^0}{\Sigma a} =$	s. +0.000038			

The initials are,

Wn. for Washington, D. C.
Phil. " Philadelphia, Pa.
N. Y. " New York City.
Camb. " Cambridge, Mass.
S. S. " Seaton Station, D. C.
Cd. " Cumberland, Md.
Wg. " Wheeling, Va.
Ci. " Cincinnati, Ohio.

The results of this table are in conformity with the *accidental* character of the quantities ϱ, y, z, u, and θ. They show that the value of θ is as great for the cases of $a = 0$, as for its maximum value, and that it may, according to circumstances, be positive or negative, while a is positive. It is on this ground that we may assume, with sufficient plausibility, that

$$\Sigma\left(\frac{y+z+u}{2a}\right) = 0, \text{ very nearly.}$$

XIII. $$\Sigma X = \Sigma x + \Sigma\left(\frac{y+z+u}{2a}\right) = \Sigma x, \text{ very nearly.}$$
$$n = \tfrac{1}{2}(B+M).$$

Whence the conditional equation for the measurement of the wave-time for one mile of the hydro-galvanic current is very nearly

XIV. $$0 = ax + n.$$

The single results are given at length in my report of January 31. From them we derive,

		No. of Measures.	Receiving Stations.
$0 =$	$-806\,x + 0.049$ (s.)	121	(Ci.) — (S. S.)
	$-806\,x + 0.054$	218	(Ci.) — (H. F.)
	$-645\,x + 0.036$	218	(Ci.) — (Cd.)

$x = +0.0000625$ (s.) = wave-time for one mile of space.
$\frac{1}{x} = +16000$ = miles for one second of wave-time.

This value of x is derived from the Seaton-Station signals registered on the Cincinnati clock-scale, October 31, 1849. It confirms the general character of the result for the operations of January 23, 1849, giving a somewhat slower motion of the galvanic waves, viz. sixteen instead of nineteen thousand miles per second.

The remaining experiments, for 31st of October, have by your directions been referred to Mr. C. CULMANN, of the Royal Bavarian Engineers, for examination and discussion. The statistics are still too incomplete to warrant a full discussion of the comparative resistance of the ground, the wires, and the batteries. It is desirable to take advantage of the prevailing frosty season, with its favorable meteorological combinations, to repeat the experiment for the measure of this wave-time on a line of greater extent. This proceeding is in fact necessary for the perfection of the art of reducing to a common value the discordant local readings of the printed dates of the transits of stars, in the longitude operations of the Coast Survey.

Yours, truly and respectfully,

SEARS C. WALKER.

Washington, February 1, 1850.

-York Daily Times, Thursday, August 25, 1853.

THE GREAT EXHIBITION.

Descriptive Analysis of the Contents of the Crystal Palace.

NUMBER SEVEN.

U. S. COAST SURVEY.

General Organization and Field Work.

Among the articles congregated in the Crystal Palace, few so much invite intelligent examination, or so imperatively require the aids of clear descriptive illustration, as the series of instruments and charts in the Coast Survey Department. These are selected and arranged with a view to exhibiting the principal methods and processes employed on this extensive work; and though the collection is necessarily wanting in some essentials, it presents a means of readily comprehending the characters, leading features, and results of this organization. Not doubting that a work so truly national and perfect, will possess a positive interest for many of our readers, and knowing that the instruments exhibited can only be understood by being described in relation to the entire system of operations in which they are used, we propose now to give such a general account of the history, organization, methods and results of the Coast Survey, as will enable visitors duly to appreciate the articles exhibited.

Accurate geography is of quite recent date, and all old maps and charts especially, are drawn with a fanciful vagueness quite incompatible with our present views and necessities. The Surveys of the American Coast, even including DES BARRES' comparatively excellent charts, had been found so disjoined and inadequate, that the need of a systematic, connected, and accurate survey of the entire coast of the United States was distinctly felt. On such a survey being proposed by Prof. PATTERSON, in 1806, Mr. GALLATIN, the Secretary of the Treasury, strongly recommended it, and in 1807, a law authorizing it was passed. Nothing of much importance was done, however, until 1832, when the work was systematically undertaken, and from that time to the prese[illegible]ppropriations and a steady progr[illegible]rked its history. Mr. HASSLER was the first Superintendent, holding this position, first from 1811 to 1818, and then from 1832 to his death in 1843. He was succeeded in 1844 by Prof. A. D. BACHE, who has continued to discharge [illegible] duties of this responsible position up to [illegible] resent time. The annual appropriations [illegible] ncreased, as the work, by its expansion, [illegible] e a more rapid progress desirable and [illegible] Prof. BACHE's organization of the [illegible] t into eleven distinct sections, en- [illegible] sive operations of the sur- [illegible] taneously in as many localities, if this be desired; thus giving to the whole work a much more manageable character, and making attainable the final results on any particular locality in a comparatively short period. Some work has been done in all these eleven sections, though only one can be regarded as essentially finished. The main original operations are tending rapidly to completion in four or five sections, but even after all is done in the first survey, reexaminations will continue to be necessary at localities undergoing change. It will require, at present rates, not far from fifteen years to conclude the survey of the Atlantic and Gulf Coasts, and a somewhat longer period for that of the Pacific Coast, though larger appropriations would abridge this time if required. The immense development of our sea-coast gives to the Coast Survey an unprecedented magnitude of operations; yet there is no portion of that long line which commerce does not require to have accurately defined, and no lurking dangers can exist in the adjacent waters without subjecting to formidable risk not only a great and rapidly increasing commerce, but also human life. The introduction of steam power into ocean navigation, by causing vessels to follow the coast without fear of storms, makes them but the more exposed to those lurking dangers, which thorough hydrographic examination discloses and defines. Moreover, there is a kind of immortality to the results of accurate surveys; for, except in a few instances, the results of a correct first survey remain applicable through an idefinitely long period. And where changes are progressing,—as, for instance, at Sandy Hook, Boston Harbor, and the mouth of the Columbia,—the importance of accurate surveys, whereby their laws and tendencies can be decisively made out, is even greater than in those portions which experience no change. It is a fact that the localities undergoing changes are very frequently just those of most importance to commerce. We cannot, then, too highly value a thoroughly accurate determination of all our hydrographic shore lines for future use in commerce and hydraulic engineering. We need to know, once for all, the ocean bottom along the shore, and the tides, currents and characteristics of the great deep itself, far beyond our marine league of domain. The commerce which contributes so large a part of our national revenue, rightfully demands in return that protection which charts, based on accurate surveys, alone can furnish. While England is expending millions upon surveys of foreign coasts, in addition to all she gives for home hydrography and topography, we are bound, at least, to urge vigorously forward this survey of our own coasts, not only for our own national benefit, but as a matter of international comity and justice. The two thousand charts of the British Admiralty, the in-

numerable surveys and explorations of France, the coast charts of Prussia and Sweden, the great geodetic survey of Russia,—these, and many like enterprises of European nations, impose on us the duty of reciprocation so far as to give them in turn reliable charts of our own sea-boundaries. We are now auspiciously progressing in this reciprocity, with the assurance, so gratifying to American pride, that, in point of style and general perfection, no foreign charts quite equal those now issued by our own Government.

The ultimate object proposed in the Survey of our Coast, is the preparation of a series of charts, presenting the complete hydrography of our entire seaboard, with the highest accuracy, on the scales required by commerce and local needs, with the addition of such topography as is requisite to present the characteristics and relations of the land adjacent. In order to insure the requisite accuracy, the latitudes and longitudes of numerous points must be scrupulously determined, and the relation of many other selected points to these must be ascertained, so that all the various bodies of soundings can be referred to one system of fixed points, whose locations and mutual distances are thoroughly known. Thus every line of soundings run is systematically assigned to its true locality, and the resulting charts exhibit a correct representation of the facts of nature.

In carrying out this scheme, a network of triangles requires to be thrown over the entire extent of our coast; its angles require to be observed, and its sides computed. By this means, all the points observed upon become known in position and in mutual distance.

The first operation in order, and one of the greatest delicacy and moment, being, indeed, the foundation of all the accuracy to be attained, is the measurement of the base line. A straight line, nearly horizontal and from five to ten miles long, is selected and graded. Then comes in play the large and formidable-looking base apparatus, one tube of which is mounted in the Crystal Palace, on its proper trestles. One might think it a matter of great ease to measure a base line, but a more difficult enterprise is rarely undertaken than such a measurement becomes, when great accuracy is to be attained. If we did not care for errors of a yard or two in a base of several miles, its measurement would be easy enough; but when six-tenths of an inch in seven miles becomes the limit of error supposable, the matter is one of transcendent skill, and the execution of such a measurement is one of the most refined operations ever conducted. First of all, the measuring bars must be so accurately compared with and adjusted to the legal standards of linear measure, as to eliminate all possible discrepancies between the two. Without great care and fidelity in this fundamental step, as also in the comparison of different national standards of length, the various independent surveys executed would give discordant geodetic elements, and the discrepancies arising from imperfect comparisons would be peculiarly difficult of detection and correction. But the element most of all demanding skill and care springs from the necessity of eliminating the effects of varying temperatures and moisture, and of all the mechanical accidents incident to the use of the base apparatus. So to construct this apparatus, as that the distance between the measuring points shall, under all circumstances of varying temperatures, be absolutely invariable, is the problem which is solved with preëminent accuracy in Professor Bache's Base Apparatus. The compensating principle, first used by Col. Colby, in the English, and by Mr. Borden in the Massachusetts Surveys, was perfected by a correction, origin[illegible] applied by Prof. Bache. Two bars of different metals (iron and brass) having unequal expansive rates, are joined transversely at the ends, by movable levers, which bear the contact points; the attachments being so adjusted that the contact points will not be moved by the expansion or contraction of the bars due to heat variations. But if the two bars do not respond with the the same facility to variations of temperature, the compensation will be incomplete during the progress of temperature changes. Prof. Bache, by means of Saxton's Pyrometer, (a beautiful arrangement, also exhibited at the Crystal Palace, which consists of a plain mirror, mounted so as to rotate as the experimental bar varies, and thus to reflect the graduations of a distant arc, into a telescope fixed on this arc,) made numerous experiments on the specific heats of iron and brass bars, and so determined their relative cross-sections, that the two bars, in the base apparatus, vary their temperatures, through a given amount, in equal times. He also experimentally determined varnishes for the two, which give them equal rates of absorption. The contacts between the ends of successive base bars, is made in measuring, by abutting an agate knife-edge against an agate plane, and a contact level indicates the standard contact, the tube being worked backwards and forwards on the trestle, by a delicate screw-movement, until the level indicates an exact contact adjustment. If the tube be inclined in ascending or descending, a level on the radius of a small graduated arc gives the angle of inclination of the bars, and a versed-sine correction for this, reduces its length to a horizontal equivalent. The tin tube, which encloses the bars, [illegible] which supports the bars on rollers, is intended to prot[illegible] the whole from injury, and from the direct[illegible] tion of sunshine and weather, thus som[illegible] limiting temperature variations. The [illegible] is secure against changes of flexture, s[illegible] to induce appreciable errors, and th[illegible] nation embraced in a tube is as ligh[illegible]

able (four men carrying a tube in measuring bases,) as it could safely be made with bars, six metres, or about twenty feet in length. The construction of the trestles, in Professor BACHE's apparatus, is quite peculiar, and is thought to give unequalled convenience to the use of the apparatus. Two tubes and six, or sometimes eight trestles, are employed in measuring a base. The Coast Survey bases are measured with a combined accuracy and rapidity *quite unequalled in the performances* of base measuring apparatus, so far as we have published means of comparison, and we think Prof. BACHE's apparatus is entitled to the first rank, in respect to its compensation and facility of field use. In measuring Dauphin Island Base, four-tenths of a mile was the average, and 183 tubes, or near seven-tenths of a mile, was the greatest day's work. As the Coast Survey will ultimately require at least eleven base lines, or one for each section, this facility of use becomes an element of even great economical importance in our own case.

When the base is duly measured, no farther direct measurement of lines in the section is necessary, but all the remaining observations in the triangulation, consist of angle measurements on graduated circular limbs. The facility with which angles can be observed or measured, with numerous repetitions, as well as the convenience of angle instruments for transportation, make it a matter of primary importance thus to limit recourse to linear measurement to the one fundamental base line, by reducing all the subsequent operations to angle measurements and computations.

Having completed the base line measurement, each extremity is occupied as a primary station, and observations made to determine its latitude and longitude, and the azimuth of the base line. In the Coast Survey latitudes are now habitually observed, (after careful comparisons with the other known methods and instruments,) by the method due to Capt. A. TALCOTT, late of the U. S. Corps of Engineers. Pairs of stars are chosen, having nearly equal but contrary zenith distances, so that by *turning the instrument 180°* around a vertical axis, the North and South stars will both cross the meridian in the zenith telescope field, without changing the clamping, and their difference of zenith distance is micrometrically measured by wires in the instrumental field. Hence, by the aid of star catalogues, the latitude is deduced. A very fine specimen of the Zenith Telescope, as modified for Coast survey latitudes, is now set up in the Crystal Palace, just by the door of the Crystal Palace Superintendent's Office. It was made by WINDEMAN, in Washington. Two or three hundred latitude observations are usually made at each astronomical primary station, nearly fifty of which have already been occupied. The observations for longitude differences are made with great care and labor, by the several methods of transporting chronometers, of moon culminations, eclipses, occultations, and the magnetic telegraph. The last method belongs to this country, originated and grew up in the Coast Survey, under the lamented Prof. S. C. WALKER, and is, decidedly, the best of all where its application is practicable. Among *the instruments exhibited at the Crystal* Palace, is one of the portable transits which is used for determining the local time, by observing the instant of meridian transit for known stars. This local time is, of course, requisite in an astronomical determination of longitudes. The azimuth or angle with the north line, made by the base, is determined with a thirty-inch theodolite. Other stations are next chosen, about ten miles distant, and signals are established or heliotropes posted. The horizontal angles which these signals make with the base line and with each other, are observed with great care about a hundred times each. These stations are in turn similarly occupied, and like observations made on the base extremities and other new stations. Thus results a series of triangles in which all the angles are observed, and in one of which the length of a side is known. From these elements, all the remaining sides or distances between stations are accurately derived by computations. The length of sides is usually increased in proceeding from the base, some lines of over ninety miles long having been observed in New-England. This network of triangles makes up what is called the primary triangulation, and it is from its discussion that the length of meridian and latitude arcs, the value of the earth's radius, its ellipticity, and deviations from a regular ellipsoid, with other grand geodetic results, are derived. Quite numerous primary stations, (already about fifty,) are occupied for astronomical, latitude, and longitude observations; a step made necessary by the marked irregularities of the earth's crust, from which result quite appreciable differences between the astronomical *latitudes and longitudes, and the geodetic, or* those derived by computation from the primary triangulation. As the work progresses, connections will be made between the primary triangulations of all the nine Atlantic and Gulf sections, and the bases will thus verify each other, as the lengths of the connecting sides will be derived from two bases, which should give identical lengths if the previous operations have been all correct. Besides this, the sum of the angles in each triangle, after correcting for spherical excess, must be equal to two right angles, thus presenting a constant check on the measurements of horizontal angles. In order to make stations visible at great distances, in primary observations the heliotrope or heliostat is used. This instru-

ment consists of a mirror so mounted and connected with a train of clockwork, that it can be made to reflect an image of the sun constantly into the distant observer's theodelite, the mirror, by its movement, exactly following the sun's motion. Such a heliotrope is exhibited at the Fair.

As the primary triangulation progresses, a *secondary* triangulation is begun, basing on the primary lines, though its component lines are usually shorter and extend to a much greater number of stations, which are occupied with smaller instruments, and a smaller number of observations at each station is made to suffice. A very fine 12-inch theodolite, made by GAMBEY, in Paris, and exhibited in a special show-case at the Fair, is used for observing altitudes and and azimuths in the secondary triangulations, where the lines are longest. It is also employed in the primary triangulations of the Southern sections, where the lines are short, and where from the flat and wooded character of the country, it is sometimes necessary to raise the instruments on tripods of forty feet height to command open lines of vision. The result of much experience in arranging these tripods has been the complete separation of the supports for the instruments and for the observer. Smaller theodolites are used in observing the shorter secondary lines, and a specimen (six-inch) is also exhibited. A *tertiary* triangulation proceeds from the secondary, the lines of which become quite short and very numerous, so as to give, generally, two or more points, accurately determined, within the limits of each sheet of soundings or topography. The topography is then executed by using the plane-table, a specimen of which instrument is on exhibition. The topographer, with his plane-table, determines graphically by intersecting lines, the position of all important points and objects, on a sheet of stretched drawing-paper, on which his triangulation points are duly projected to a scale of 1-10,000th the natural scale. Around the points thus determined, the topographer works in by the eye and auxiliary instruments the details of the ground, and runs horizontal contour curves, or the curves of intersection with the ground surface, cut out by a series of horizontal planes taken twenty feet apart.

At this point the hydrography begins. The sounding party is furnished with a large sheet of paper, on which a careful projection, or set of parallels and meridians, is drawn, and the several points of triangulation falling within the contemplated field of soundings, are accurately plotted. Plane-table points, and the plane-table shore line, are also furnished in the same manner, when practicable, so that the hydrographer starts on a secure and labor-saving foundation. The requisite points are marked on the ground by signals, and the sounding-boat or vessel starts to run on ranges, sounding as it goes. The ranges are at once referred to the signals, both in direction and position, or sextant observations are made at the extremities of each range, on three or more of the signals, which give the means of plotting readily the ends of the range. In off-shore soundings, signal vessels are sometimes requisite, their position being observed from the shore, and the soundings being referred first to the signal vessels. Still further out at sea, the run of the vessel combined with latitudes and longitudes, gives the location of soundings. Thus, all the soundings are correctly located and plotted on the large hydrographic sheets, the scale of 1-20,000 being generally employed. Two sextants, of the kind in common use, are exhibited at the Fair, one being of French and one of English make. Contiguous sheets of soundings, accurately determined, being plotted with reference to points, whose positions relative to each other are fully known, can be combined without difficulty, in reducing them to the scales required for publication; an advantage quite unattainable on an extended coast, by any other method of surveying than such a systematic triangulation. This gives a unity and correlation of parts to the most extensive surveys, as the peculiarities of the earth's form are all taken into strict account in the computations, and the distances being all derived from the standard bases, by accurate and constantly verifying methods, there is no difficulty in combining the whole scheme of points for our entire coasts.

The extensive operations in sounding require to be systematically accompanied by observations on the local tides and currents, as these are of the highest importance to seafarers, and their thorough study is essential to accuracy and safe navigation. At the Fair is a self-registering tide-gauge of the kind now in use, which was made by Mr. SAXTON, the accomplished head of the Instrument Department of the Coast Survey Office. A clock-work gives regular, uniform motion to a paper fillet one foot wide, and the time is recorded by a series of points, which prick through this paper as it progresses. A float is so connected with the recording pencil, that in its rise and fall with the tide, the pencil traverses the width of the paper. These two motions—one proportionate to the time, and one to the rise or fall of tide, give a resultant record curve on the fillet, in which the tide movements are all clearly seen and easily measured by a scale. Six of these gauges have been sent to the Pacific coast, under Lieut. TROWBRIDGE U. S. corps of Engineers, to record the tidal movements at three permanent and numerous

temporary stations along our entire Western sea-margin—where the existence of some quite peculiar tidal anomalies gives particular importance to a careful series of reliable records. We may remark that Prof. BACHE has analyzed the tidal phenomena of our coast, with a skill and success in all points equal, and in some superior, to the very best tide studies ever made elsewhere. The observation and study of sea-temperature and currents, including the Gulf Stream, have been steadily pursued, and with good success. Numerous specimens of sea-bottoms have been brought up with the Steelwagen lead—preserved in small phials, and examined under the microscope by Prof. BAILEY, of West Point, and others, who have discovered numerous species of shells and forms of animalcular life—each locality and depth having a characteristic combination of species. A Steelwagen lead, and some of the ocean-bottom specimens brought up by it, are exhibited at the Crystal Palace.

Having now presented a general, and, as we know, an imperfect view of the organization, methods, instruments and results of the *Field Work* of the Coast Survey, we will defer to a future number what we have to say about its *Office organization, operations, processes* and products. This division into *Field and Office* work is a natural one, and will enable us to give more detailed information on the manufacturing processes which make the progress of the various Coast Survey Charts exhibited at the Crystal Palace.

228

THE

UNITED STATES

COAST SURVEY:

ITS HISTORY, OBJECTS, ORGANIZATION, METHODS, AND RESULTS.

From Putnam's Monthly of Nov., 1855.

NEW YORK:
DIX & EDWARDS, 10 PARK PLACE.
1855.

Blank page retained for pagination

229

THE

UNITED STATES

COAST SURVEY:

ITS HISTORY, OBJECTS, ORGANIZATION, METHODS, AND RESULTS.

From Putnam's Monthly of Nov., 1855.

NEW YORK:
DIX & EDWARDS, 10 PARK PLACE.
1855.

HOLMAN & GRAY,
Printers and Stereotypers, New York.

THE UNITED STATES COAST SURVEY.

How much this vast work has contributed to the progress of science and scientific culture in America, can only be known by a careful study of its history. It has already made its mark on our foreign reputation; it has helped to give a vigorous start to various important branches of study in our own land. It is thus rightly ranked among those agencies which are establishing our national reputation on a sure and noble basis, while it is one of those means by which the highest types of mind will be called into original action. Boscovich, Delambre, Arago, Bessel, Schumacher and Struve, are but instances in which national surveys have called forth eminent genius, and given it a sphere of activity and renown otherwise unattainable. Companionship in this distinction is not less the right and possibility of our own Coast Survey.

Among the readers of our Magazine, there are, doubtless, very few to whom the nature and character of this great enterprise is wholly unknown. Yet we are confident it will be no unwelcome service, if we here present a brief account of its history, objects, organization, methods, and results.

All accurate geography and hydrography is of modern, and indeed of quite recent origin. The fabulous histories of Herodotus are even outdone in grotesqueness by his geography. Ptolemy, Hanno and Strabo, at least, fully prove that scientific geography was a thing unknown to Greece and Rome. The revival of letters was marked by little advance in knowledge of the earth, until, by the improvements in astronomy and navigation which followed the advent of Copernicus, Galileo and Columbus, clearer ideas of the earth as a whole, and of the relations of its parts, began to grow into the mass of common knowledge. Navigation, stimulated by the hope of gain and by ambition to discover and take possession of colonial empires, became bold, and fearlessly ventured into unknown regions. Island after island, coast after coast, was explored. Little by little, the grotesque fancy of the early mapmakers was chastised into a rude approach to conformity with fact. Homans, Tardieu, D'Anville, Cassini, Arrowsmith, Jeffreys, with other compeers and successors, bestowed care on the style and accuracy of their maps and charts. The Spanish charts embodied the results of the explorations which distinguished the palmy days of Spain, while the *rutlier* or sailing directions absorbed the knowledge which the charts did not convey. The nautical treasure-house reared by Hakluyt has drawn much of the early geographic lore into its rich repository. Half fact, half fancy, now an error and now a real discovery; its strange dialect lures the reader on to roam the Indies and to traverse the shore of our then half-fabulous land. A vast deal of true geography grew up in those heroic days, but it was mixed with still more of error. Our Pacific coast was then, indeed, *terra incognita*. On many maps still extant California is represented as an island bounded on the North by the *Fretum Aniani*, and in some it is jumbled with Jesso or Japan. We have seen a map

by Louis de Hennepin in which California appears as a peninsula, separated from Jesso by the straits of Anien, with Jesso separated from Asia and *Japon* by the strait of Vries.

From such crudities the various surveys of Des Barres, de Brahm, Gauld and other British officers had done much to extricate our Atlantic coast prior to the Revolution. The Atlantic Neptune published by the British government brought together much of what was then known of our coast, and the imprint of Jeffreys is borne by some maps of localities along it, which have even yet been replaced by nothing better. The surveys of Des Barres have done him enduring honor where the work was actually performed under his eye, but in some charts, bearing his name, gross errors prevail. So, too, Gauld's Key West and Tortugas chart, whose accuracy was all the times could afford, is still quite tolerable as a navigator's guide. But as for our coast at large the charts were absolutely bad, and full of danger to those who trusted them. With few local exceptions no trustworthy charts had been made, adapted to the wants of our increasing navigation. The defect was in the insufficiency of the surveys, forming their basis, which had been rude, disconnected, and hasty. Our navigators had not yet begun to receive that assistance, in comprehending the peculiarities of our coast, which has since been so admirably rendered by the Coast Pilot and charts of the Messrs. Blunt (father and sons) of New York.

Meantime Europe had been alive with great geodetic undertakings, having for their direct object, the formation of accurate maps of states and charts of their coasts, and for their indirect result, the determination of those elements of the earth's figure which are so essential both to geography and astronomy. France had measured its arc of a meridian, on which to base its decimal system of weights and measures. England had begun its magnificent Ordnance survey, and throughout Europe, geodesy was fast assuming a scientific and practical form. The British Admiralty had fully entered on that sagacious policy of surveying the coasts and harbors, not only of British dependencies, but of whatever foreign realms invited commercial enterprise; a policy which has done much to establish English maritime supremacy, and to which the world now owes over 2000 Admiralty charts, including a large portion of the known hydrography of the entire world.

Moved by this impulse and by a full consciousness of our great deficiency in good coast and harbor charts, the late Prof. Patterson, of Philadelphia, in 1806, brought forward a project for a complete survey of the U. S. coast. This project, favored and fostered by Secretary Gallatin, led to the passage of a law in 1807, authorizing a survey. Fortunately the plan adopted was that proposed by Mr. F. R. Hassler, whose high scientific attainments and experience in the Berne triangulation, in Switzerland, eminently qualified him to propose the best plan then practicable. Nothing was done till 1811, when Mr. Hassler was sent to Europe to provide the necessary instruments, which were to be made from new designs by him. Then came the war with England, and soon after the restoration of peace Mr. Hassler was removed from his post, before fairly entering on its duties. The work was at the same time transferred from the Treasury Department to the Navy Department. A period of inaction followed, which was first interrupted in 1827 by that enlightened Secretary of the Navy, Mr. Southard, who recommended a return to the former organization. In 1832, this recommendation was adopted and an appropriation made. It is from this date that the real and effective operation of the coast survey begins.

Mr. Hassler was appointed Superintendent and continued in that position till his death in 1843. A man of rare mental qualities; truly original and learned in the most advanced astronomical and geodetic science of his day; as a mathematician respectable and as a physicist meritorious; he was distinguished by some singularities which were unfortunate in their influence on the popularity of the work over which he presided. A single amusing illustration may indicate how little court he paid to the arts of popularity. It is told that, when he was once urging an increase of his salary upon the Secretary of the Treasury, the Secretary remarked that Mr. Hassler's salary was about equal to his (the Secretary's), to which Mr. H. rejoined: "Oh yes, but Secretaries can be got any day, while there is but one Mr. Hassler." This

peculiarity of temperament engendered hostilities, which led to a Congressional investigation, with its usual controversial concomitants. Incapable of comprehending the true character of our people and institutions, and using a dialect peculiar to himself, Mr. Hassler was in no condition to compel justice to his real merits. It is, hence, the more incumbent on us to bear witness to the great fertility of his mind within its proper sphere. He did good service in giving a right start to the work which he directed, and his researches on our weights and measures and their comparison with the standards were highly meritorious and extensive. His elaborate paper (in the Am. Phil. Trans.), on the coast survey instruments and methods, won special praise from the late lamented Bessel, and remains his chief monument.

In 1843, a law directed the formation of a Board to reorganize the work. This Board retained and extended the scientific features of the work, defined its organization and established in detail the methods and order of operations, essentially as they now exist. This plan of reorganization was approved, and the general Treasury Department regulations. based thereon, were adopted in 1844. Since that date they have been in constant and most successful operation.

In November, 1843, Prof. Alexander Dallas Bache was appointed to the places of Superintendent of the Coast Survey and of Weights and Measures, made vacant by Mr. Hassler's death. His accession gave a new impulse to the operations both in the field and office, and a progressive improvement has marked each succeeding year of his administration to the present time. Prof. Bache graduated at the U. S. Military Academy, as head of the class of 1825, and was a Lieutenant of Engineers till 1829. Then, in turn, he became Professor of Natural Philosophy and Chemistry in the University of Pa., President of the Girard College, and Principal of the Philadelphia High School, until 1843. His qualifications for the position he now holds cannot be better stated than in the words of the illustrious Humboldt, who thus writes to Prof. Schumacher:

"You know better than I do, in how high an estimation the direction of the work for the survey of the coast stands, not only among us, but among all the most illustrious men who, in France and England, are interested in the study of geography and nautical astronomy. To the most solid knowledge of astronomy and mathematics, Mr. Bache unites, in a very eminent degree, that activity of mind and extent of views which render a work of practical utility profitable to the science of the physics of the globe. In a region of the globe where the direction of oceanic currents, the differences of temperature produced by these currents, and by the upheaval of the bottom, and the direction of the magnetic curves, offer so important phenomena to the navigator, such a work could not be placed in better hands than those of Mr. Bache. The government of the United States has acquired a new right to our gratitude by protecting nobly that which has arrested the attention of the hydrographers and astronomers of Europe. I should be glad to think that in a country where I am honored with so much good feeling, my feeble testimony might contribute to enliven the interest which is due to the excellent labors of Mr. Bache."

The first and most important object of the survey, that, indeed, for which it was began, and toward which all its operations tend, is the execution of a systematic, continuous, and accurate sounding out and delineation of the marine bottom along our entire coast line. All the hydrographic elements of a perfect chart are embraced under this ruling head, and all the various processes and means by which the charts themselves are to be prepared and circulated for nautical use. The plan is nothing less than this: to obtain and publish accurate maps of the shore line, in all its ins and outs, from Maine to Texas, from San Diego to Frazer's River, omitting no island, tidal river, harbor, bay, branch, or lagoon; to make frequent soundings along and abreast of all this coast line, in such a manner and with such a record as that each sounding can be plotted in its true position, relative to the shore line, thereby developing all shoals, rocks, holes, channels, bottom changes, characteristics and configuration; to define the local and general peculiarities of the tides and currents; and, in fine, to gather the materials for an accurate picture of the ocean and ocean bottom along our coast and its indentations, which shall embrace every feature of importance to general, coasting and harbor navigation. The unveiling of the mysteries of the great deep is to be extended so far seaward as to furnish every practicable aid to the navigator, for identifying his position by the deep-sea lead: a distance which, in the great submarine plateau, be-

tween Long Island and the New Jersey coast, extends to nearly three hundred miles. The grand old Gulf Stream has been, and is to be questioned, as to its movements, temperature, distribution, configuration, limits, causation and details of formation. Whatever of fact can be gleaned by careful exploration of the shoal sea-belt, lining our shore, is to be duly noted, and, if possible, brought before the sailor's eye in the clearest language of chartography. The result will be a series of harbor charts on large scales, embracing each of the harbors and river entrances, for harbor navigation; a second series, on a smaller scale, of the sounds, bays, and outer coasts, for coasting navigation; and a third series of general coast charts, of still smaller scale, and adapted to general navigation along the coast, or in approaching it.

The vast magnitude of this hydrographic work can scarcely be realized. France, England, Prussia, Sweden, and the East India Company, in Hindostan, and some other nations, have undertaken systematic surveys of their coasts, but none of these compares in extent of shore line with our own. That gnarled oak, the Chesapeake, the intersected and island-girt coast of Maine, that gigantic Venice of the Northwest, Puget's Sound, give a development of shore line quite astonishing and scarely paralleled, unless it be in the Norwegian labyrinth of islands, or in that St. Lawrence archipelago where Capt. Bayfield's survey has now penetrated. We doubt if any piece of hydrography has yet been undertaken of so laborious and difficult a character as that of the Florida reefs. Our coast hydrography is, indeed, an immense labor, and its completion demands a patient application of the painter's motto, *nulla dies sine linea*. Year by year it progresses. From Nantucket to Albemarle Sounds it is now almost complete, not to mention various detached masses of work accomplished. A worthy perseverance will soon bring the day, when, from the St. John's to the Rio Grande, from San Diego Bay (or Cape St. Lucas?) to 54° 40′, vessels may coast our entire sea-board in safety, guided by that Ariadne's clue, a continuous and trustworthy chart. This consummation is the great practical object of the Coast Survey. It serves, in addition, to bring to light many invaluable commercial facilities; a statement which will be best illustrated when we come to enumerate the results of the survey.

The second object of the Coast Survey is, its topographical rendering of the peculiarities of the narrow sea-board belt, along which the interests of commerce and our national defense are chiefly concentrated. The delineation of the shore line itself is strictly a topographical operation, and it is, in fact, furnished by the topographers, for the hydrographic parties. It is indispensable to a good chart, that it should contain correct indications of the positions of the hills, towns, streams, fields, marshes, roads, etc., which border the included shore line, and which, in fact, constitute the coast proper. The navigator needs all these aids in identifying his position along shore, and few charts are so rude as not to attempt the presentation of their coasts, however unscientific and incorrect their topography may be. Thus it is true that, even for navigation, the topography of the coast belt is a primary requisite.

This coast topography is also invaluable for studying the various problems of defense, river and harbor improvements, light-houses, and whatever national and local objects are specially concerned with the features of ground within this sea margin. It is always an advantage to a place to be accurately mapped, and the great national interests specified find, in these narrow sea coast and lake coast belts, almost their entire arena, and are daily experiencing the value of the accurate topographical sheets of the survey. Simply as local maps, the various published sheets possess value and importance, not unappreciated by our citizens.

The geodetic object of the Coast Survey is that in which science is chiefly interested. Geodesy has for its office to develop, with the utmost accuracy, both the general figure and dimensions of the earth, and to refer the various localities on its surface, by their coördinates of latitude and longitude, to the standard circles, thereby defining their positions relative to each other.

Astronomy takes its starting point in geodesy, and all the celestial distances are determined in terms of the terrestial. Hence the eager striving for extreme accuracy in these foundation distances. When Norwood, by pacing, thought he had determined the length of

a degree "within a scantling of the truth," his scantling became the beam in Newton's eye, which, for a long time, caused him to doubt the correctness of his gravitation theory. These scantlings are the stuff from which science is now raising her grandest fabrics. When we reflect on the host of discoveries which an increased accuracy of measurement has brought out from the waste residuals of less exacting investigators, almost any zeal for the utmost quantitative precision seems strictly reasonable. We cannot now stop to define the great deeds and triumphs of geodesy, and its invaluable services to astronomy and navigation: this would be to recount a large part of the history of science. Nearly every civilized nation has contributed a share in the noble pursuit, and many of the greatest minds have spent their strength in this generous competition. The claim of America to have done her part, must rest mainly on the geodetic results of the coast survey, not yet complete. Mason and Dixon's line was a provincial measurement for which we contributed only the ground. Yet even this, imperfect as it was, has entered into all general discussions of the earth's figure. Borden and Paine's Massachusetts arc is good, but limited. It is surely not too much to say, that one object of the Coast Survey is to contribute American geodetic data of a higher order than Mason and Dixon's, and more extensive than those of Massachusetts.

Fortunately for science, all the observations and computations demanded by the highest geodesy are essential and integral parts in the discussion of the latitudes and longitudes of the Survey, and these are the very pith and marrow of accurate charts. There is, then, this grand scientific result in prospect, with no works of supererogation in its attainment. The discussion of irregularities or "local errors" is developing singular and interesting earth phenomena, which must be duly analyzed and explained before the latitudes and longitudes of even the 3,840 stations in the lists of the Survey already published can be finally adjusted. The Czar Nicolas caused an immense triangulation to be executed for its geodetic results alone, and the illustrious Struve has for many years been conducting this giant work, now near its close. Our Coast Survey will incidentally bear geodetic fruit scarcely inferior in value to that from the great Russian and Norwegian arc. France, England, Ireland, Scotland, Switzerland, Germany, Prussia, Italy, Norway, and Sweden, part of Russia, part of Spain, Algeria, Cape of Good Hope, Hindostan, part of Peru, and some smaller localities have been trigonometrically surveyed with such precision as to contribute geodetic results of value. If we do not relish falling behind the land of the Hottentot, it is incumbent on us to go on faithfully to the end of our great geodetic work.

The organization of the Coast Survey, however slight may be its popular interest, is a subject of primary importance to the current prosperity and ulterior success of its operations. Essential as good organization is to all extensive works, it is probably true that this Survey demands a rarer union of qualifications for its direction than any other enterprise now progressing among us. Not only must a thorough mastery of all the resources of geodesy, topography, hydrography, and chartographic art actuate and coördinate all the parts, but great administrative skill and a thorough acquaintance with the modes of public business are needful, for the judicious application of the personal and fiscal resources available, and for the preservation of harmony in the external relations of the Survey.

All appropriations, as well as the organic laws for this work, are specifically made by Congress, with executive concurrence. Existing laws place the Coast Survey under the charge of the Treasury Department, to which it organically belongs, and its regulations, projects of operations, details of officers, communications of information, and the like, are acted on by the Secretary of the Treasury, who is also the medium of official correspondence with other Departments and with Congress. One great advantage of this arrangement is, that three essential classes of officers, namely, army officers, navy officers, and civil assistants, of proper qualifications, can be brought into harmonious coöperation under a neutral direction; a concurrence which would be impracticable, were the work under the Navy or War Department. In point of fact, the triangulation, topography and office duties are now performed by officers of the Army, detailed for that purpose, and by civil assistants,

sub-assistants, aids, hired artists, clerks, and laborers. The hydrography is appropriately executed, in the vessels of the survey, by navy officers detailed for this duty, with such enlisted men and hired assistance as are required. The most appropriate talent is also drawn at will from civil life, for field observations, computations, drawing, and engraving. Thus all the chief elements of success are blended in one system. Experience has proved this organization to be excellent in its workings. It has also shown that the work would not thrive under the Navy Department.

The Superintendent is the immediate head of the Survey in all its branches, and all its parts receive their general direction from him. Each field party acts under special instructions from him, and all office operations are directed and reviewed by him in a general way. Each chief of a topographical or hydrographic party has his definite field of work, in which he proceeds under the general regulations and his special instructions. The assistant in charge of the office has the direction of the daily details of office duty, under the established regulations and routine, receiving special instructions from the Superintendent on new questions. Thus all the parties work together on one general plan, and the office work is so directed as to maintain the most advantageous relations with the field work. Disbursements are made by chiefs of parties and the assistant in charge of the office, whose accounts are revised by the Superintendent and rendered through the disbursing agent of the Survey, who keeps the accounts of the entire work. The annual appropriation is rigorously distributed to the various operations of the year, and each officer knows what he has to do and what funds are available for the purpose. Each one has his defined sphere of responsibility, and all these responsibilities are centralized and revised by the single executive head.

Space will not permit us to treat in detail the methods of the Survey. It must suffice briefly to present the succession of operations which precedes the final issue of any particular chart. Our Atlantic, Gulf and Pacific coasts are distributed into eleven distinct sections. (The Lakes and their shores are being surveyed by the Topographical Engineers, entirely distinct from the Coast Survey.) Operations are already progressing in each of these sections, and are conducted in each independently of the others, or as if it were a separate survey.

First of all comes the *reconnaissance*, or general inspection of the section from point to point, to ascertain its main features and to fix on the best scheme for triangulating its surface. In this operation, a good eye, a clear judgment, and sterling common sense are required. Each section has its own peculiarities to which the triangulation must confirm, and a certain *coup d'œil* is requisite for the selection of stations, so as to make well-conditioned and well-located triangles. Reconnaissance in detail usually precedes the occupation of stations, only by one or two years, and in some cases is even conducted by the same party which makes the station observations.

The reconnaissance having led to the selection of the main base line for a section, the next operation, and one, too, of the greatest delicacy, is the measurement of the base. This line is usually from five to ten miles long, perfectly straight, and nearly level. The only actual measurement of length in a section is that of the base line, and from this all the other distances are deduced by angular measurements and computations. Hence this line requires to be measured with the utmost attainable accuracy. For this purpose, a special base apparatus, devised by Prof. Bache, so as to maintain a constant length under all working changes of temperature, has been employed since 1846. The principle of compensation is applied, somewhat as in the gridiron pendulum, and the brass and iron bars have their cross sections so adjusted as to change their temperatures at equal rates. The apparatus consists of two tubes, about twenty feet long, enclosing similar compensating bar systems; besides six trestles and various other adjuncts. The constant length of the bar systems is critically compared with a standard bar before and during measurements, and every precaution is employed to insure the final length of base being obtained in standard units. The base ends are marked by permanent monuments, and are the first stations occupied for triangulation.

The triangulation consists in the suc-

cessive occupation of a series of stations for the measurement, at each station, of the horizontal angles between such other stations as are thence visible. From the base line stations, several other stations are observed upon, and from these, others more remote are observed, and so on to the extremes of the section. It thus comes to pass, that from this modest base line, thousands of lines in a section have their lengths determined with extreme precision, by angle observations and computations only. The primary triangulation is made continuously through an entire section with as few stations as practicable, and its lines generally increase in length from the base, so that some lines are about ninety miles long. The secondary triangulation starts from the primary lines and works down to shorter ones. The tertiary triangulation works down in like manner from the secondary. Thus a section, in which the network of primary, secondary and tertiary triangles is complete, embraces a great number of points whose relative positions and distances areaccurately determined.

To locate these points properly on the earth's surface, it is essential to observe at certain stations for latitudes, longitudes, and azimuths. For this purpose a considerable number of primary stations have been occupied, and their latitudes and longitudes astronomically determined, by the zenith sector or telescope, and by the transit instrument; while the azimuths, or horizontal angular distances between the triangulation lines and the meridian, are measured on the large theodolite used in the triangulation. These observations are of such precision as to bring to light the irregularities of attraction on different points of the earth's crust, even where no mountains, or other external disturbing cause appears; and these irregularities, or "station errors," when determined in two or more ways, are verified even as to their amount. Thus geodesy shakes hands with geology, and is sounding the earth's crust in a manner truly remarkable.

A great number of points being thus determined, the topographer follows, with his plane table, to work in graphically on his field sheets, around these points, the positions of houses, fences, boundaries, marshes, forests, and roads; but most important of all is the shore line. Hills receive his special attention, for he not only fixes their location, in a general way, but determines the contours or curves of section, by a series of horizontal planes at twenty feet, vertical distance, apart. It is his business to record, on his field sheets, all important objects and accidents of ground, in their true positions, relative to the trigonometrical points falling within their limits.

The topographer having completed his map of the shore line for a given locality, this is furnished to the hydrographer, whose business it is correctly to locate his hydrographic observations relative to this shore line, and the plotted triangulation and plane table points. He proceeds to make soundings in detail on determined ranges, using the sextant, and the requisite signals on shore and afloat. Thus, every sounding is recorded, with the means of plotting it as accurately as required. Observations on the tides and currents accompany the hydrographer's progress. All his soundings are finally reduced to mean low-water, and then plotted. Characteristic bottoms are duly noted, and their signs are plotted in place. The tidal and current observations are discussed, both in a local and a general way. Little by little, the various incidents in the progress of the great tide wave are eliminated. The peculiarities are made out with such distinctness as to enable the navigator to understand and use their action. Thus the hydrographer, basing his work on all which has gone before, proceeds minutely to define the local peculiarities of his field. The greater portion of the cost of the whole work lies in this slow sounding out of the deeps. It is the hydrographer's prerogative to reap that harvest of discovery, in preparing which all his predecessors have labored. The shore is everywhere too well known for noteworthy discoveries to be made thereon, but who can tell what unknown shoal, rock, channel or harbor the explorer of the ocean depths may unveil?

The operations now instanced all belong to the field-work. Their results are a series of astronomical, trigonometrical, and hydrographic note-books, a series of topographical sheets, and a series of hydrographic sheets. These records of field operations constitute the material from which charts are to be made in the office. All field records are deposited and systematically ar-

ranged in a fire-proof depository, called the archives, where they are available for reference at any time. The office divisions have for their duty, to prepare these materials for publication, and to execute all the operations for the final issue of charts. Given certain raw materials, the most perfect charts possible are required to be manufactured.

First of all, the computing division reduces and discusses the astronomical and trigonometrical observations, so as to furnish the correct latitudes, longitudes and distances, for use in plotting the stations. The discussion of the geodetic elements, also, devolves on this division, and from this source must emanate the reduced grand arc and parallel measurements. The tidal reductions and discussions are conducted by a special division. The drawing division has for its part, accurately to plot the data furnished by the computing division, to reduce and combine, by means of the pantograph, or camera lucida, or by squares, the original topographical and hydrographic sheets, on the scales, and in the styles required for final publication. Nicety of execution is combined with the utmost accuracy, to make a single sheet convey the greatest amount of information. The resources of topographical expression, and the utmost power of the best graphic skill are expended in the various coast reductions, prepared for the engravers. The engraving division takes the reductions of the draftsmen, and, by the cunning of dry point and graver, effects a faithful transfer, and even a finer finish of these embryo charts. Day by day, the engraver ploughs his level copper field with delicate lines, until at last a perfect reversed chart greets the eye, and tells, by *proofs*, that the work nears its close. Sailing directions, explanatory notes, tide and current tables, soundings and bottoms, fill out the spaces not given to coast topography. The letter engravers who execute them are restricted to lettering only, as the topographical engravers are to topography. Next comes the electrotyping. A finely engraved copper-plate only gives from 1200 to 2000 unimpaired impressions. Hence it is of vital importance to multiply copies of a plate without the great cost of reëngraving. Thanks to one of the beautiful arts of electro-metallurgy, a perfect reproduction of the finest copper-plates is now regularly and certainly effected. An *alto* or relief cast in copper is thrown down by electrolytic action, molecule by molecule, on the immersed engraved face, until it attains the needed thickness. This is separated from the original plate, and a new electro-deposit is made on the alto. This second deposit or *basso* is then cleaved off from the alto, and is a perfect duplicate of the original plate. Any required number of bassos can thus be taken from one alto. Thus, by a comparatively inexpensive process, the number of good impressions obtainable from the finest copper plate becomes absolutely indefinite. Last of all comes the printing, which is effected in the usual manner of plate-printing, by working the ink into the engraved lines, wiping with cloths, and the palms of the hands, and by running the plate and sheet through a cylinder and bed-press, lifting the ink out of the engraved lines, and on to the paper. Thus any demand can be met, and agents, in the principal cities, sell to navigators and others these unequaled charts at rates but little exceeding the cost of paper and printing.

This brief enumeration of the successive operations which must precede the final issue of a Coast Survey chart, can afford but an inadequate conception of the great labor with which this consummation is attained. In a work of this nature, where many distinct operations and arts are leagued to accomplish a single result, it is self-evident that everything must be done in strict subordination to one central direction, under penalty of a general chaos, if aberration or failure befall any branch. Field parties and the office, astronomical and triangulation parties, the topographers and the hydrographers, must all work together in unity of purpose and plan; a result which can only spring from a judicious general direction, and a true fidelity to the work, as a whole, among all subordinates. The signal success which has crowned this survey, when compared with any other, in respect to accuracy, style, and amount of work done, is convincing proof that these essential elements have not hitherto been wanting.

To enumerate all the results of the Coast Survey, would alone require a long article; we can only allude to a few of them. Among the most valuable are the discoveries and develop-

ments of new channels, harbors, rocks, shoals, and other commercial facilities and dangers. Boston Harbor has been benefited by the discovery or development of Stellwagen's Bank, Davis' Bank, various rocks, and the sounding out of Broad Sound channel. The discovery of fourteen shoals on Nantucket Shoals, some too, quite dangerous, has been of immense advantage to our coasting and Liverpool commerce. New York has received a boon of priceless value, in the discovery of Gedney's channel, and it is of the greatest prospective importance that the laws governing the growth of Sandy Hook, in its threatening invasion of the main ship channel, should be illustrated by a series of accurate surveys. Delaware Bay has received, from the discovery of Blake's channel and Blunt's channel, a valuable enlargement of resources for navigation, especially in the winter. Chesapeake Bay and the Virginia Coast have contributed largely to the list of shoals discovered, besides several useful channels or inlets. Cape Hatteras has lost some of its terrors, by reason of a new channel across the shoals. Charleston has gained a treasure in the discovery of Maffitt's channel, which may soon be the one chiefly used. Florida reef has received a general clearing up, and Legare Harbor, and the channel leading to it, Isaac Shoal, and Rodgers' Key West channel are among the trophies. Mobile was surprised by the revelation of two feet more water in its main channel than had been supposed. The western coast, when California gold began to lure our vessels amid the perils of the Golden Gate, had no charts or maps of even tolerable accuracy. The Coast Survey, by McArthur's and Alden's reconnaissances, and by the series of harbor charts, which it has so quickly produced, has supplied the needed guides for a comparatively safe navigation along the whole coast.

We ought not to omit a reference to the fine series of observations on the Gulf Stream, its temperature, distribution, depth, velocity, limits and configuration. This grand oceanic current, the theme of so much idle speculation, had never before been studied with that thoroughness which must precede any tenable explanation of its phenomena. In Hakluyt are various allusions to it, showing, on the part of the Spanish navigators, some knowledge of its effects. Franklin was the first to appreciate the character of this mighty current, and Col. Jonathan E. Williams was the earliest good observer. To Rennel, an Englishman, who, many years since, gathered from the British navy, and elsewhere, a vast store of observations, we owe the best analysis of this phenomenon which has yet been published, and if we except the coast survey observations, but little knowledge has been added, in the long period since Rennel wrote. The discovery of the cold wall, the hot and cold bands, the law of distribution of temperature with depth, the effect of the form of the bottom on the configuration of the current, are sufficient vouchers to the fitness of that hereditary transmission of a great research, which has made not only lineal but scientific descendants from Franklin, of the three brothers Bache. The thorough analysis of the Gulf Stream is well begun, and year by year is progressing; so may it be, till all the truth is fully established.

Great progress has been made in studying the tides and currents of our coast. The single day tides of the Gulf, and the great diurnal inequalities on our Pacific coast, are almost entirely analyzed and reduced to the general tidal theory. Natural history has been benefited by the study of infusoriæ, brought up from the ocean bottom to ascertain the laws of their distribution, and by that study of the Florida coral reefs which Agassiz made under the auspices of the survey. In the determination of latitudes and longitudes, the methods have been much improved. The introduction of Talcott's zenith telescope method, and its improvement, have much facilitated good latitude determinations; nor are its results inferior to those with Airy's zenith sector. The method of telegraphic determination of longitude differences has grown up in the survey, under the inspiration of Walker's genius. Nothing compares with it, when practicable: not even lunar culminations, with all of Peirce's study, and the American ephemeris to assist. The telegraphic method known as "the American method," is little by little traveling over Europe, and that, too, with no improvement, but rather retrogradation, in the hands of Airy, Leverrier, and Quatelet. Some English and French journals seem quite

unaware that this method is American. Such provincialism is best punished by being left to itself, like any other incurable ignorance.

The list of localities now published, where coast survey observations on the magnetic elements have been made, numbers 136 stations. The methods of geodetic computation have been systematized and improved. The camera lucida has been introduced, and fitted for reducing maps. There are 416 original topographical and 373 hydrographic sheets in the office. No less than 15,902 miles of shore line have been surveyed. There are 52 fine original chart plates, 125 electrotype copies, and many sketch plates. Over 112,000 sheets of charts have been printed. The annual reports have put on record a great amount of valuable research, and bear ample witness to the aids furnished by the Survey, in locating light-houses, beacons, buoys, and the like. The art of electrotyping has been very much improved by Mr. Mathiot in the Coast Survey office, and probably the best electrotype plates in the world are made there.

Even the brief synopsis now presented, can scarcely fail to make apparent the broad general fact, that the Coast Survey is indeed a work most fruitful, most promising, most honorable to the nation. It is a potent instrument in vindicating our scientific independence, and this in turn is to prove one of the most potent elements of the national progress. It is a specific organization, using specific means for a truly noble end. That end is being steadily accomplished, and its importance seems to be yearly more felt. Nothing is now needed but a continuance of the favor and liberality which have of late been freely accorded to it, and there seems to be no reason for doubting that this great national enterprise will still continue to prosper through the twelve remaining years which its achievement will probably demand.

240

SPECIAL REPORT

ON THE

Comparative Progress and Expenditure

OF

THE COAST SURVEY,

IN DIFFERENT YEARS.

FOREIGN SURVEYS, &c.

WASHINGTON:
PRINTED BY HENRY POLKINHORN.
1858.

16

Blank page retained for pagination

SPECIAL REPORT

ON THE

COMPARATIVE PROGRESS AND EXPENDITURE OF THE COAST SURVEY, IN DIFFERENT YEARS, &c.

In the autumn of 1857 the Treasury Department called for a special report, showing "the moneys expended yearly by 'the Coast Survey, and the work executed in each year, and 'also the weights and measures furnished the different States 'and custom-houses, and the cost of the same," from the commencement of these works respectively. Materials for this report were at once collected, and it was written as soon as the annual report was finished, and presented to the Secretary of the Treasury in December, 1857. A list of the papers which accompanied it will be found in Appendix No. —.

The results arrived at from the discussion of the several questions which presented themselves in the course of this report, were summed up in eighteen propositions, the proofs of which were given as briefly as possible in the body of the report, and the full discussion of which, with the data upon which it was founded, was given in the papers of the appendix to the report.

I propose now to review this discussion in the present report, by presenting the several propositions in their order, and by abridging the remarks made in demonstration of them.

1. The survey has been extended into every seaboard State and Territory of the United States.

It is now in progress, either in field or office work, in all the States on the Atlantic and Gulf of Mexico, and in California and the Territories of the Pacific.

Texas was annexed in 1845, California was added to our Union in 1849, and the survey was at once commenced in both, and within two years and a half a reconnaissance of California, and Oregon and Washington Territories, was made and published.

The coast being divided into sections, the survey can go on as rapidly as is deemed desirable. Section II was nearly completed in 1844. Sections I and III were in progress in 1844. Sections IV and VIII were commenced in 1845. Sections V and IX in 1847. Sections VI and X in 1849. Section XI in 1851, and Section VII in 1852. Each section being put under survey as rapidly as the extension of the appropriation would permit.

2. Taking all the operations into consideration, the Atlantic sections are more than half done, the Gulf sections are nearly one-third done, and both can, at the present rate of appropriation, be completed in from ten to twelve years, by close economy and thorough efficiency of arrangement. Nothing less will do it.

This proposition is proved by a review of the past progress, and an estimate of the future, in the several sections from Passamaquoddy to the Rio Grande.

The discussion is given in brief in my report of last year, and further examination has not altered the conclusion then arrived at.

It should be recollected that the rate of appropriation was specially referred to, and was that of 1857–'58, exceeding by $90,000 that of 1858–'59.

3. The extension of the Coast Survey has been made the subject of repeated report, and has met the favorable action of the several Executives, and of different Congresses, for the last fourteen years.

The advantages of a speedy completion of the work, the economy of an enlarged scale, and the prosperity of the coun-

try, have combined to make this extension desirable, in the judgment of the executive and legislative authorities of the country.

In regard to it, the Secretary of the Treasury thus spoke in his report to the Senate, in 1851:

"At the close of 1844 it became obvious to the Superintend-
'ent of the Survey that thirty years of progress, at the rate of
'appropriation and plan of operating, would not take the sur-
'vey to the mouths of the Mississippi. He stated frankly in
'his report the necessity for greater expedition, and the plan
'by which it could be obtained—the division of the coast into
'sections, and the commencement of the survey in as many as
'Congress would provide appropriations for."

"At this time Texas was not annexed, and the western coast
'was not in possession of the United States."

"This plan has received the sanction of Congress in succes-
'sive years from 1844 up to the present, when every appro-
'priation asked for, except that of the Florida reef, which
'is the same as last year, is less than was appropriated about
'three months ago for the same service for the present fiscal
'year."

"Nor is this increase like that of an appropriation for a
'branch of service which must always have an existence, since
'it decreases the time during which the survey will last."

Again, "While the appropriations asked for the Coast Sur-
'vey were increased twofold, the amount of work executed
'was more than threefold. This economy results from the di-
'vision of labor which an increased scale permits, and from the
'vigorous pushing of the work at the south as well as at the
'north, by which the best season for surveying is used by the
'same persons in each region."

4. Compared with those of other nations, the surveys undertaken by the United States have been on a moderate scale of expenditure.

The trigonometrical survey of England alone had cost, up to

1856, five millions of dollars. That of Ireland, five million three hundred thousand dollars. That of Scotland, one million four hundred thousand dollars. Making for the United Kingdom eleven and a half millions of dollars. This is for the land work. Besides this, over ten millions of dollars were expended in hydrography. The total cost of the field and office work of the United States Coast Survey, from 1843 to the middle of the year 1857, including the estimated facilities furnished by the Navy Department, and deducting the estimated value of public property then on hand, (omitting the original maps and charts,) was less than four and a quarter millions of dollars. The new map of France has already cost more than one million of dollars, and since 1834 France has expended four million three hundred thousand dollars in hydrography.

An interesting recapitulation of his notes of foreign surveys is given by Professor Trowbridge. Appendix No. —.

5. In comparison with foreign surveys—and nearly every civilized nation has deemed it essential to survey not only its coast, but the interior of its territory—it will be seen that the progress of the United States Coast Survey has been satisfactory as regards time.

1. The great trigonometrical and hydrographic surveys of Europe and India have been in progress since the beginning of the present century. The survey of *England*, which is not yet completed, was commenced in 1791. The surveys of *France* have been in progress nearly one hundred years. The work upon the new map commenced in 1816, and is now about two-thirds completed. The survey of *Russia* has been in operation thirty years, and one-fourth of the empire is now completed. The surveys of *Germany* generally, including *Prussia* and *Austria*, were commenced at the beginning of the present century. The survey of *India* has been in hand nearly sixty years.

2. As far as the United States has undertaken a similar work in the survey of its coast, the progress made has been en-

tirely satisfactory—more than half of the Atlantic and Gulf coast of the United States having been completed in less than twenty-five years, and giving fair promise of completion of the field work in twelve years more.

6. Compared with the cost of foreign surveys per square mile, or acre, or per lineal foot of shore line, the cost of the coast survey work has been economical.

In his report in 1849, the Secretary of the Treasury stated as a general conclusion from the comparison with foreign surveys, that the work of the coast survey cost considerably less, and that in the case of the British survey, a dollar nearly replaced a pound sterling in expenditure.

Professor Trowbridge's conclusion, Appendix No. —, is to the same effect, from a recent and independent examination of the data of foreign surveys.

7. Compared in regard to the number of persons employed during a given time in the work of the survey, the United States Coast Survey has accomplished its results with fewer persons.

The number of persons employed in the land parties of the Coast Survey was six-tenths of the number employed in the English survey in 1843, and four-tenths of those in the Irish survey.

The number of men in the hydrographic parties in 1857, was but three-tenths the number employed in foreign hydrographic work by Great Britain between 1843 and 1847.

8. In regard to opinions at home and abroad, of the mode in which the survey has been conducted, a reference to authorities shows that—

1. Authorities connected with commerce and navigation have certified the practical usefulness of the work; have pronounced its execution efficient, and its progress satisfactory.

2. Authorities of high scientific character at home and

abroad have pronounced that the work is well conducted, and on a level with the science of the day; indeed, tending to the advance of various departments of applied science.

The reports, memorials, and resolutions of the insurance companies and Marine Society of Boston, of the Chamber of Commerce and underwriters of New York, of the Board of Trade of Philadelphia, of the underwriters, ship-owners and others of the city of Baltimore, of the Chamber of Commerce of Charleston, are directly to the first point. Those of the committee of the American Association for the Advancement of Science, of the American Academy of Arts and Sciences of Boston and Cambridge, of the American Philosophical Society of Philadelphia, of the Franklin Institute of Pennsylvania for the Promotion of the Mechanic Arts, of the Faculties of St. John's College, Maryland, and of the University of Virginia, are to the second point.

The extracts from the report of the Secretary of the Treasury (Hon. Thomas Corwin,) in 1851, giving the testimony of Arago, Humboldt, Quetelet, and others, are to the same point. More recent testimony by the President of the Geographical Society of London, by Colonel James, and other distinguished scientific men, is given in the paper of Professor Trowbridge, Appendix No. —.

The President of the Geographical Society of London, in 1850, says: "I have studied the question closely, and do not hesitate to pronounce the conviction, that though the Americans were last in the field, they have (*per saltum*) leaped into the very first rank." In 1851 the President speaks of the work as "one of the most perfect exemplifications of applied science of modern times."

9. The space required to report the result of the several years of the survey, text and plates used as a rough indication, shows a great increase of work as compared with the increase of appropriations.

In 1844, twenty-one octavo pages sufficed to give a state-

ment of the work done for the year, and it was shown upon three progress sketches.

In 1856, there were ninety-one pages quarto in the body of the report, two hundred and sixty-seven in the appendix, and sixty-seven plates. Turning the pages quarto into equivalent octavo pages, the proportion of 1856 to 1844 is six-fold, and including the appendix, twenty-fold; the plates, seventeen-fold. The results of the work are promptly communicated to the public through preliminary maps, charts and sketches, and the more finished results, as directed by law, follow at a later day.

10. These reports are in demand not only on the seaboard, but in the interior States, both east and west.

The distribution list shows this clearly. Between one-seventh and one-eighth of the office distribution is in the six States of Ohio, Kentucky, Tennessee, Indiana, Illinois, and Missouri.

11. The records and results are promptly publishing under act of Congress, so as to secure against loss, to prevent delay, and to insure the full information from, and responsibility of, those by whom the work is executed.

It has been the reproach of works of this kind, that while the results are furnished, the data upon which they are made up are not presented for scrutiny at all, or if at all, so late that, for practical use, they have lost much of their value. The American Philosophical Society recommended earnestly the publication of the records of the Coast Survey, and on the recommendation of the Department to Congress the publication was authorized, and an appropriation made for the object in 1854–'55, and in the two subsequent years.

At the time of making the special report, this work was in full progress. It has since been unavoidably suspended for want of the necessary appropriation to carry it forward. This, it is hoped, as soon as the temporary exigency of the Govern-

ment is relieved, will be renewed, so that the publication may go forward.

12. The progress of the Coast Survey, as indicated by geographical limits, shows a great increase in recent progress over that of the earlier years.

In 1844 there were two centres of work—Narragansett, and Buzzard's Bays, and the coast of Long Island, Delaware Bay entrance, and the upper part of the Chesapeake. A base of verification was measured at each end of the work; four sheets were published, and six were in progress. In 1845, this work was extended eastward, and a new centre in Albemarle Sound was added. Eight general and harbor charts were published, and the important survey of the Gulf Stream was begun.

In 1856, the work in Section I reached Mt. Desert, Maine; the Kennebec and Casco bay were under survey; work was done north of Cape Ann and near Plymouth; Massachusetts bay was completed, and progress made on the outside of Cape Cod, and further progress towards George's Bank in off-shore work. The difficult shoals in Nantucket Sound were finished. Six charts of this section were drawn, and seven in progress; seven engraved, and five in progress of engraving, during the year. In Section II, the re-survey of New York bay and harbor for the State Commissioners was nearly completed, and the Hudson river work was extended both northward and southward. Several special surveys were made, and a large number of drawings executed. The tidal observations were numerous and systematic. One chart was engraved and two more were in progress in this Section. In Section III, the work on the rivers of Virginia was nearly completed, and that on the sea coast, and the approaches and interior of the Chesapeake, advanced. Magnetic observations were made; some charts of localities in this Section were in progress of drawing; two were engraved, and five in progress of engraving. In Section IV, the connection of Cape Henry was made, in a preliminary way, with the work of Section III.

At the middle centre, the work advanced southward to within twenty miles of the Cape Fear. The work from the Cape Fear centre was pushed southward into the next section. Four charts of this section were drawn, three were engraved, and four in progress of engraving. In Section V, the northern work was carried south to Lockwood's Folly, the middle work to the Hunting Islands, and the southern centre work over Sapelo, St. Simon's, and Turtle river, and part of Cumberland Sound. The hydrography from Charleston to Tybee was also completed. Six charts were drawn; five of them were engraved, and one was in progress. In Section VI, the St. Mary's work was in progress, the triangulation of the keys and reefs of Florida was advanced eastward and westward to within one season of a junction, and the hydrography was carried eastward to Grecian shoal, and westward to Loggerhead key. Off-shore soundings were made from Tybee to Cape Canaveral, and temperature observations continued in the Gulf Stream. Two charts were drawn, and three were in progress, and three were engraved. In Section VII, the work from the Cedar Keys centre was extended southward, St. Mark's harbor was completed, Apalachicola and Pensacola begun. Deep-sea soundings were made, and others for temperatures. Two charts were drawn, and two engraved during the year. In Section VIII, the work was extended westward from Mississippi Sound, being completed to Pass Christian and Pearl river. Macon and Montgomery were connected for longitude by telegraph; the Chandeleur Sound work, and the off-shore hydrography, were advanced, and Atchafalaya bay and Cote Blanche bays were under survey. Five charts of the work in this section were drawn during the year, and four were in progress. In Section IX, the land work of Matagorda bay was nearly completed, the hydrography outside made some progress, and one chart was drawn and engraved.

In Sections X and XI, the work from the several centres made good progress. San Francisco bay was nearly completed. Anacapa, and part of Santa Cruz island, were completed, and

other work of the Santa Barbara channel and islands executed. Cortez shoal was examined; San Diego harbor re-surveyed; tides and currents observed. Nine charts were completed during the year, three were engraved, and five in course of engraving. Sixty-seven maps, charts, and sketches, were published, with the report of that year.

The increase of the appropriation is simply the means of working more economically, and of sooner accomplishing a desirable result. The great outlay for the survey ceases us soon as fixed points are determined once, and the whole work has once been gone over, by which any changes may be readily determined, without going into a general survey again, or elaborate operations.

13. The comparison of progress and expenditure shows that the work on the larger scale of the present system is more economical than on the smaller scale of the former progress.

The statistical data, founded chiefly on the extent of shore line, show that the progress in 1855, when the work had taken its present proportions of progress and expenditure in the three principal operations of triangulation, topography, and hydrography, ranged from nearly two and a half times the average progress during the earlier years of my superintendence, viz: between 1844 and 1849. The progress of office work was in a higher ratio. Making a liberal allowance for the progress on the western coast, the proportionate progress on the Atlantic and Gulf of Mexico coasts in 1555, is at least two and eight-tenths times (2.8 to 1) the average between 1844 and 1849. The expenditure for the same coasts was on the average $116-000 during the first five years named, and $260,000 in 1855, (calendar year,) or less than two and three-tenths (2.3 to 1) of the former. The economy was five-tenths in two and eight-tenths, or eighteen per cent., and this leaves out many things which would give a much higher ratio, as will be seen from the statement of Professor Trowbridge, to which I shall now refer.

Revised Statistics of Field and Office Work of the United States Coast Survey.

Character of work.	Previous to 1844.	From 1844 to 1857.
RECONNAISSANCE.		
Area in square miles	9,642	43,171
BASE LINES MEASURED.		
Primary, No. of	1	9
Secondary, No. of	2	41
Length of, in miles	19½	134
TRIANGULATION.		
Area in square miles	9,076	31,949
Extent of general coast, in miles	570	2'907
Extent of shore line, in miles, including bays, sounds, islands, &c	1,588	14,602
Geographical positions determined	1,183	5,789
ASTRONOMICAL OPERATIONS.		
Stations occupied for azimuth	9	68
Do. for latitude	9	109
Do. for longitude	1	74
MAGNETIC STATIONS.		
Magnetic stations occupied	0	183
TOPOGRAPHY.		
Length of general coast, in miles	414	2,498
Length of shore line, in miles, including rivers, creeks, &c	7,667	25,203
HYDROGRAPHY.		
Soundings, No. of	808,147	4,080,738
Soundings in gulf stream	0	3,429
Tidal stations, permanent	20	275
Do. temporary	107	492
Current stations occupied	0	783
Specimens of bottom preserved	1,029	5,972
RECORDS OF OBSERVATIONS.		
Total number of volumes	566	8,485
MAPS AND CHARTS.		
Topographical maps, originals	168	507
Hydrographic charts, do.	142	457
Total number of manuscript maps and charts	325	1,325
Number of sketches made in field and office	311	1,189
ENGRAVING AND PRINTING.		
Engraved plates, finished charts	5	61
Preliminary charts, sketches, and diagrams, for Coast Survey reports	0	335
Electrotype plates	0	400
Finished charts published	0	64
Preliminary charts and hydrographic sketches published	0	277
Printed sheets of maps and charts distributed	0	66,576
Printed sheets in hands of sale agents	0	42,948

FIELD WORK.

Reconnaissance	1 to 4
Base lines	1 to 17.6
Triangulation	1 to 5.6
Astronomical observations	1 to 9.2
Topography	1 to 4.6
Hydrography	1 to 5.0
Records of observations	1 to 15.0
Mean	1 to 8.7

This leaves out the following :

Magnetic stations	0 to 183
Gulf-stream soundings	0 to 3.429
Tidal stations, permanent	1 to 13.7
Do. temporary	1 to 4.6
Current stations	0 to 783
Specimens of bottom	1 to 5.9

The proportion of field work would be much greater for the last twelve years, if the above were included.

In passing to Professor Trowbridge's comparisons, which take in the period before my superintendence, I would observe that the proportion of one of the operations to the other parts of the work, has been diminished purposely, the topography not being carried so far inland, partly in consequence of the objections urged in the discussions in Congress to this extent of topographical detail, and partly from the different character of the southern coast, where the larger proportion of the recent work has been carried on.

The paper by Professor Trowbridge (Appendix No. —) shows that, considering all the expenditures of the survey from 1832 to 1844, and from 1844 to 1856, twelve years in each, "The 'expenditures for the last twelve years * * * amounted 'to about four times the expenditures of the preceding twelve 'years, and it is shown that the field work during the last pe- 'riod was about 7.3 times greater than for the preceding pe- 'riod, the office work being more than ten times greater. 'Taking the field work for the comparison, which is the least 'favorable, we have the following result:

'From 1832 to 1844, expenditure 1, work done, 1.
" 1844 to 1856–'7, " 4, " 7.3.

'This comparison for an interval of twelve years, supposing 'the increase in expenditure and results to be gradual, gives an 'annual increase of expenditure of thirty-three (33) per cent., 'and for the annual increase of work done, sixty (60) per cent., 'showing a gain in economy of twenty-seven (27) per cent."

"It is thus seen that while a gradual increase in the Coast 'Survey expenditures has been found necessary in order to ex- 'tend the benefit of the work to all parts of the coast, at the 'same time a vast gain in time and money has been effected."

Professor Trowbridge further shows that if the western coast expenditures and results be deducted, which is necessary to a fair view of the case, since the prices on that coast are so much higher than those on this, the economy shows still more strongly.

With that deduction, "The comparison between the cost 'and results will be as follows for the Atlantic coast:

'From 1832 to 1844, expenditure 1, work 1.

" 1844 to 1856–'7, " 2.7, " 6.5.

'Which shows an increase of twenty-two per cent. per annum 'in the expenditures, and of fifty-four per cent. in the results— 'a gain of thirty-two per cent. in economy."

For further details, see Professor Trowbridge's paper, Appendix No. —.

In these comparisons the enhanced prices of all supplies is not considered; nor is the fact that in the southern sections the wages and supplies are more costly than in the northern ones, to which the work was chiefly confined in the earlier periods; but the comparison is from the figures as they stand upon the record, the statistics being used to show the progress, and the appropriations to show the cost of the work.

14. The present scale of conducting the survey is just up to the wants of commerce and navigation. To diminish the scale would be to fall below those wants, to make the survey take more time and cost more money.

When the survey was upon its former small scale, there was a constant complaint in Congress and in the country generally of its slow progress. The Executive and Congress felt this, and the subject being fully and fairly considered by the President and Treasury Department, and by Congress, the scale was enlarged to its present extent.

The various accredited bodies connected with commerce and navigation throughout the country have approved of the present scale of the work as at once effective and economical.

In every question of advancement of commerce and navigation, in the questions of military and naval defence, in the questions of lighting, beacons and buoys, throughout the whole coast, Atlantic, Gulf, and Pacific, the data of the survey are called for to give the necessary basis for investigation and calculation.

The constant calls for information from the archives, reaching eighty-one in 1857, show the demand for such data.

To specify some of the questions in regard to commerce and navigation: The question, can the Great Eastern, now built in Great Britain, enter our harbors? has been determined by reference to coast survey maps. Portland has been selected as the place of touching. It has been shown that New York is accessible to her from the Sound side, so that she can lie nearer to the city than Sandy Hook; that she can enter the Chesapeake and reach a proper anchorage.

The discovery of Stellwagen's Bank, off the entrance to Massachusetts Bay, has led to a vast improvement in the safety of the navigation of that bay.

The development of the Nantucket Shoals, by which the light boat has been placed, and navigation rendered comparatively safe, has been of vast importance to the commerce of the United States, and was not made one hour too soon, since one of our national vessels might have been lost with a precious freight, but for the knowledge of a Coast Survey pilot, acquired in the survey of these shoals, and his presence at the right point of time, and at that place.

The whole question of the growth of Sandy Hook into the main ship channel of New York harbor, has been settled by our surveys.

The question of the draught of the Cunard steamers has been settled by the Coast Survey discovery of Gedney's Channel at New York.

The question of the proper port of entrance for a great southern line of steam vessels, has been solved by the Coast Survey, and in fact the survey of the splendid harbor of York river, Virginia, was not made a month too soon.

The question of the improvement of the Cape Fear and of Charleston harbor, turns upon our surveys.

The question of a Southern naval depot was decided upon the merits of the harbors brought out by our maps, as is shown by the discussions in regard to Port Royal, S. C., and Bruns-

wick, Ga., in the Senate of the United States. The important communication across the peninsula of Florida by the air-line railroad, the question of its harbors on the Atlantic at St. Mary's, and at Cedar Keys and Tampa on the Gulf, and of its communications coastwise from the north and east to the south and west, and with California, are determined, for the most part, from Coast Survey data, acquired not a year too soon.

The question of the improvement of Apalachicola harbor will turn upon our data.

The discovery of a new channel at the eastern end of Dog island, leading to a safe and commodious anchorage in St. George's Sound, will bear an important part in deciding the future of this part of the coast.

The questions of the use of Mobile bay, and of Ship and Cat island harbors, for the entrance of the British packet steamers, were decided by these data, within a few months after the surveys of these important localities were made, and concerned all the Gulf States, and the interior connected with them through the rivers.

The question of the growth of the delta of the Mississippi will be determined in the progress of the survey.

The question of the great communication across the continent from Galveston, and of the improvement of the coast of Texas, rests upon these surveys, which are in fact two years behind the demands of that question.

The whole commerce of the western coast of the United States has, in the view of her merchants and navigators, received the highest benefit from the recconnaissance maps of that coast and the surveys of the harbors. The discovery of red sand, as a mark for the bar of San Francisco, is of the highest importance.

In regard to the defences, the Chief Engineer speaks in terms not to be misunderstood. The modification of the defensive works at New York, and of those at Mobile entrance, and the defences of San Francisco, may be cited among many instances of the value of these surveys.

The improved light-house system has availed itself of the Coast Survey data, in regulating the positions and number of lights, and in determining their necessity; also, in placing beacons and buoys. The Florida reef has been rendered comparatively safe by the beacons, places for which were pointed out by the survey; by the anchorages found, and the charts presented to navigators. The loss of one large vessel on this reef, avoided by our chart, according to the testimony of her Captain, would have covered most of the cost of the Coast Survey for one whole year.

15. The list of developments and discoveries made by the Coast Survey parties in their soundings and examinations, shows, in a striking form, the utility of the Survey to commerce and navigation.

This list, Appendix No. —, includes at present no less than a hundred and fifty items, and shows how very necessary it was to the mariner to be made acquainted with the dangers and facilities to navigation thus developed. The list contains developments on every part of the coast which has yet been under survey.

16. The enormous losses by marine disaster, as well of life as of property, should be diminished by every proper means; and one of the most effective of these is—by providing accurate charts of the coast.

In 1855, about four hundred and thirty lives were lost upon our coast, and property to the value of $11,850,000. The increase of tonnage yearly is about ten per cent. Interesting statistics of wrecks, obtained by Professor Trowbridge from the underwriters at New York, are stated at the end of this paper, Appendix No. —. That the tendency is to diminish the risks of navigation, is well known to the underwriters. The case of the Florida reefs is directly in point. By the erection of beacons, resulting from the surveys, the publication of sketch maps as the survey was going on, and other circumstances not necessary to state, the number has been diminished, and the char-

acter of the wrecks has been changed. In three years, from 1844 to 1846, there were, on the average, thirty-seven wrecks upon the Florida reefs; while in three years afterwards, (1854–'56) notwithstanding the increase of tonnage, there were but thirty-five wrecks on the average. The increase of tonnage would have made the proportional number forty-nine. The proportional losses, too, were much diminished.

17. In determining the scale and mode of executing the Coast Survey, it should be considered that the work is a temporary one, having a limited object, the surveying of a definite extent of coast.

The survey of the coast having been once determined upon, there is a definite amount of work to be done, and the problem is to execute that with the greatest economy and dispatch consistent with the resources of the Government. The increase of the appropriations provides for the more rapid completion of the work, and terminates, therefore, all expenditure at an earlier date. It is not like the increase of a government expenditure for a permanent department, where an enlargement of expenses remains, and year by year must be constantly provided for, but this provides for its own completion, at a day so much earlier as the means are more abundantly furnished, and in fact, as experience shows, in a greater proportion than this.

18. While other compensations under the Government have been considerably increased, those of the officers of the Coast Survey have, on the average, been diminished; indicating a close economy in this branch of the public service, where the salaries are fixed by the Treasury Department itself.

This is notwithstanding the enhancement in price of every thing in the country, which has occurred during the period referred to.

REVIEW

OF THE

OPERATIONS AND RESULTS

OF THE

UNITED STATES COAST SURVEY.

FROM THE AMERICAN JOURNAL OF SCIENCE AND ARTS, VOL. XXV, P. 75. 1858.

THOUGH the annual reports of the United States Coast Survey have been frequently noticed in this Journal, no general or connected view of the progress of our greatest national scientific work has yet been given. The voluminous reports themselves, appearing as they do each year, filled with elaborate details and copiously illustrated by diagrams and charts, convey no adequate idea of the real magnitude and importance of the Survey. We are apt in the attentive and well repaying study of the details to lose sight of the unity of the whole. So many sciences are here pressed into service, and so many special results of absorbing interest are obtained, that the materials almost make us forget the size and the beauty of the edifice.

An organized being, said Kant, is that of which all the parts are mutually ends and means. We are forcibly reminded of the definition in studying the operations and results of the Coast Survey. All the results, in geography, in physics, in geology, in short in every branch of science, are at once means and ends: means, as they form necessary and integral parts of a great and symmetrical whole; ends, as they all possess a fixed and definite value in the sciences to which they belong. This remark, if true as applied to the Survey considered simply from a scientific point of view, is far more forcibly illustrated by the practical bearings

of the work, every one of whose details has an immediate practical value, while the enduring, far-reaching utility of the whole is second to that of no other human undertaking.

It is our purpose in the following pages to offer a concise view of the operations and results of the Coast Survey, regretting only that the necessary limits of a scientific review will scarcely permit us to give more than an outline sketch.

The survey of a coast so extensive as that of the United States is even in its general features a work of immense extent. That coast stretches from New Brunswick to Mexico, and from the Straits of Fuca to Old California; upon the Atlantic and Gulf from the 24th to the 44th parallel; upon the Pacific from the 42d to the 50th. Within that range of more than 5000 miles it embraces every geographical peculiarity. Innumerable islands, bays, capes and headlands, line the long reach of shore. Sandbanks hundreds of miles in length, enclosing shallow half-inland sounds, and bays stretching far into the interior like Norwegian fiords, are among its most striking features. The Coast Survey must accurately locate every prominent point, map out the bottom of every bay and harbor, fix the bearings of every reef and shoal, trace the course of every current, deduce from long continued observations the laws of the tides, and in short, observe and measure every peculiarity in the physical geography of the coast which the most refined science, the most delicate methods of observation and the most perfect instrumental means can measure or detect.

After a preliminary reconnoissance, the Survey begins with the measurement of a base, that is to say, with the accurate determination of the length of a line upon the earth's surface, the two extremities of which shall serve as starting points. Setting out from these two initial points, the survey proceeds by great steps of thirty or forty miles till the whole coast is covered with a network of large triangles, constituting what is termed the primary triangulation. The angles only of these triangles are measured, the sides being successively calculated by the aid of the angles and base. The accurate measurement of this line involves the most delicate instrumental methods. The expansions, inclinations, and flexures of the measuring bars, and the contacts of their extremities must be observed with exquisite nicety. Here at the very first step in the work, the science of physics is called upon for its indispensable aid, and the reflecting pyrometer measures the expansions of the bars with an accuracy which is almost without limit. Delicate levels give the corrections for the inclinations and flexures, while the contact level determines the contacts of the successive bars. To such a degree of perfection have the measurements been brought that the probable error in determining the length of a base five miles in

length does not under favorable circumstances exceed a few tenths of an inch. The base line being measured, the triangulation begins. Signals at distances of ten to twenty miles from either end of the base are observed in succession, and their angular distances determined with all the precision which modern mechanism has given the theodolite. The sides of the great triangles thus obtained being calculated, the signals form themselves fixed points for new angular measurements, and so the triangulation stretches from hill to hill till the prominent points of the entire coast are determined. The signals themselves are of no small interest. Bright tin cones mounted upon poles are often used, and reflect to a distance a brilliant line of solar light. But of all signals, the heliotrope—a movable mirror placed so as to be directed by a telescope—is the most perfect. With this instrument, the sun's rays have been reflected so as to be distinctly seen with a telescope at the distance of more than one hundred thousand yards. It is easy to see that, as the triangulation extends, the small errors inseparable from every physical measurement may accumulate so that the positions of the stations most remote from the base line may be incorrectly determined. Two methods are adopted to guard against errors of this kind. A subsidiary base line may be measured near the terminal signals of the primary triangulation, and from the extremities of this we may work backwards, so as to check the results of the first series of observations and calculations of distances. The geographical positions of the principal stations may themselves be determined by accurate astronomical observations, assigning their exact latitudes and longitudes, to check the calculated positions. Both these methods have been brought almost to perfection, but the latter has been especially fertile in new and beautiful results.

It is easy to see that while the bases and triangles give distances, the observations of latitude and the azimuths give differences of longitude by the aid of spheroidal formulas, a central longitude having been once determined. The differences of longitude are in their turn checked by the telegraph operations to which we shall presently allude.

The base which serves as the commencement of the primary triangulation for the eastern and middle states lies within the state of Massachusetts, a little to the north of Rhode Island. Its length is over ten miles and its direction nearly northeast and southwest: it was measured in 1845. Surveys for a verification base have been made in the northeastern part of the state of Maine, on Epping Plains. Since the commencement of the survey not less than nine primary and thirty-five secondary bases have been measured, making a total length of about 135 miles.

As the different stations of the primary triangulation are at different heights, it is necessary to measure vertical as well as horizontal angles, and finally, in consequence of the spheroidal figure of the earth, to reduce the plane triangles, which are the direct results of the measurements, to spheroidal triangles, at the level of the sea. In this manner after immense labor, both of observation and of calculation, the positions of the primary stations are at length fixed, and these now serve as starting points for the secondary triangulation which determines the general outline of the coast in detail, and the positions of rocks, reefs, and islands. The triangles observed are now smaller but very much more numerous, and the labor of observation and reduction even greater than before. Then comes the topography of the coast, the work at every successive step running more and more into detail. The coast line is now traced and laid down in charts of elaborate minuteness and finish. Harbors are surveyed and mapped out by innumerable soundings; the exact character and value of each being determined. The nature of the bottom with reference to anchorage, the depth and direction of channels, currents, tides and prevalent winds, the proper position of lighthouses, buoys and fog-bells, all form subjects of special and minute attention. In this manner the entire coast from Mt. Desert island to Cape Fear has been almost completely surveyed, and that portion of the sea-coast may be regarded as nearly finished. But beside the bays, harbors, and sounds of the coast, the rivers receive their share of attention, small triangulations being carried up to the head of tide waters, based upon one of the sides of the larger work. In this manner the river shores are accurately mapped, while careful soundings determine the bars and channels. The mouths of the larger rivers offer special subjects of examination of the highest interest and importance. We refer to the changes in the depth and position of the channels produced by the effects of currents. The characteristics of the delta of the Mississippi, and the enormous quantities of matter annually brought down by the current are too familiar to require notice in this place, but the changes in the entrance to the harbor of New York have not until very recently attracted attention to the same degree.

The extension of docks and piers into the North and East rivers, and the amount of new made land, excited such serious alarm in the mercantile community that a Board of Harbor Commissioners was appointed in the year 1855 to consider the whole subject and devise means for averting the impending danger. To the action of that Board the assistance of the Coast Survey was cheerfully and gratuitously rendered, and the results of the survey and of a careful and accurate examination of the effects of wharves and piers upon harbor currents, have

been of the greatest importance to the commercial prosperity of the city. Another very important observation has been made of the existence of a slowly moving northwardly current on both sides of Sandy Hook, tending by deposits of sand to narrow the main ship channel. For the action of this current the Survey provides a remedy which can be applied as soon as it shall become necessary.

We have already stated that the assistance of astronomical observations is needed in the operations of the primary triangulation. The special objects of the Survey and the peculiar character of the work done by it, have in their turn exercised a remarkable influence upon astronomy itself, considered at least as a science of observation. New methods for the determination of latitudes and longitude have had their origin in the necessities of the Coast Survey alone, while the methods already known and practised have been developed and perfected. Special series of observations have been undertaken at the two observatories of Cambridge, Mass., and at numerous minor stations, to obtain the astronomical data requisite for the determination of differences of longitude, while the genius of the most eminent mathematician whom our country has produced, has been devoted to the perfecting of the methods of reduction and calculation.

The determination of differences of longitude by means of the electric telegraph—a method which doubtless suggested itself to thousands, when the telegraph passed from an idea to a reality—was first carried out properly by the Coast Survey. This method has not merely yielded results of great value to the survey itself, but the particular mode of applying it has been generalized into the American method of recording astronomical observations, and of measuring minute intervals of time. This method has been adopted in several European observatories:—in all but one with an honorable acknowledgment of its origin.

The experiments of Mr. Wheatstone made in 1834 with apparatus devised and executed by Mr. Saxton, gave the first determination of the velocity of electricity in a metallic conductor. This velocity was estimated at about 288,000 miles per second, and until within a recent period, in spite of all analogy and even of experience, Wheatstone's determination was supposed to hold good, at least approximately, for galvanic currents as well as for electricity of high tension, and for bad as well as good conductors. The telegraph operations of the Coast Survey demonstrated at the very outset the inaccuracy of received ideas upon this subject: they shewed that the galvanic current moves very much less rapidly than electricity of tension, varying according to Dr. Gould's discussion of the observations, from 12,000 to 18,000 miles per second, and though not yet fully re-

duced, they have rendered it, to say the least, probable that the velocity also diminishes as the resistance to conduction increases. Special investigations directed to all these points have been undertaken, and a volume of records and results is now preparing.

To determine the difference of longitude between Cambridge, Mass., and Liverpool, four distinct chronometric expeditions have been sent out, namely: in 1849, 1850, 1851, and 1855. In the last expedition the number of voyages made was six, and the number of chronometers sent out fifty-two. The first three chronometric expeditions gave results which could not be considered as satisfactory, in consequence of the remarkable influence exerted upon the chronometers by differences of temperature, though the instruments were compensated in the usual manner. In the expedition of 1855 an uncompensated chronometer was employed with the others. Great care was taken to observe the temperatures of the chronometers themselves during the voyage by means of thermometers, and the results of the compensated instruments were carefully compared with those of the single one without compensation. The chronometers employed were moreover carefully investigated before the expedition, by exposing them to different degrees of heat and noting the effect upon the rate. The observations of this last expedition, after careful discussion, have given a difference of longitude between Cambridge and Greenwich of $4^h\ 44^m\ 31^s{\cdot}89$, with a probable error of about 0·2 of a second. The successful laying of the telegraph wire between Europe and America is anxiously looked forward to as presenting an opportunity for determinations of longitude by the most perfect method which human ingenuity has yet devised. The importance of this single determination can scarcely be over-estimated, since it fixes the geographical relations of the old and new worlds.

In connection with its astronomical and geodetical observations, the Coast Survey has been enabled at a trifling expense to carry out an extensive series of determinations of the three magnetic elements at very numerous stations. These elements it will be remembered are the declination, inclination, and horizontal intensity. So great has been the amount of material accumulated, that the report for 1856, now in process of publication, contains for the first time, magnetic charts of the North American continent sufficiently complete to enable us to compare upon the large scale for our own country, the results of observation and of theory. In these charts the lines of equal variation, dip and intensity are traced, and a comparison of the two former with those deduced from the general theory of Gauss exhibits a satisfactory agreement in form. Further observations, especially in the interior, are wanting to enable us to make this comparison

quantitatively, as well as qualitatively. The determinations of the declination and variation at points actually upon the coast, are of great service in navigation. The report of 1856 contains also very valuable and elaborate discussions of the secular variations of magnetic declination and inclination, both upon the eastern and western coasts, reference being had to the earliest recorded observations. Empirical formulas are also given for a number of stations, which enable us to determine with a satisfactory approximation, the two angular magnetic elements at any required epoch.

In the progress of the hydrography of the Coast Survey, very numerous observations of the tides have been made for the purpose of correcting soundings, and of determining the establishments of the different ports. The necessity of both these classes of observations is sufficiently obvious, but the superintendent has connected with them observations of a more permanent character, in order to ascertain the laws of the tides in particular localities, and to trace the progress of the tide wave along the coast severally, as well as in bays and rivers. For these observations two species of gauge have been used; the self-registering and the common staff gauge. The former possesses the advantage of requiring little or no attention, and of furnishing a permanent and reliable record in the form of a curve of which the abcissas represent the times and the ordinates the corresponding heights of water. The number of principal stations for tidal observations was 73, of which number 45 were on the Atlantic Coast, 18 on the Gulf, and 10 on the Pacific.

Since the commencement of the survey there have been in all 613 tidal stations, of which however a comparatively small number have been furnished with self-registering gauges. The results obtained have been of great practical importance, giving as they do for the first time accurate information with respect to the tides of the Gulf and of the Pacific coasts, and leading to the construction of accurate and reliable tide tables.

It is not saying too much to assert that no single series of tidal observations yet made possesses so high a scientific value as those of the Coast Survey. Not only is the range of coast studied greater, but the character of the tides themselves is in a great measure sufficiently free from the effects of local causes to enable us to obtain from them results of definite value for the general theory. On the other hand the Gulf of Mexico and particular portions of the Atlantic Coast exhibit peculiarities of much interest, as yet imperfectly investigated, but seeming to show the importance of a careful study. While the tidal observations hitherto discussed have been for the most part isolated, made at different points upon the earth's surface by individuals, during a period of about 200 years, those of the Coast Survey

have been made systematically, at numerous carefully selected stations, upon the coasts of a continent lying between two great oceans, and under the direction of a single person.

An elaborate discussion of these observations has led to the construction of maps of the cotidal lines of the Atlantic, Gulf and Pacific coasts, which are of especial interest not merely from their connection with our own shores, but from the fact that they are the only series of cotidal lines yet deduced from an extensive and connected series of observations. The term "cotidal line" it will be remembered was first introduced by Mr. Whewell to denote a line passing through all those points which have high water at the same hour of the day. It is convenient to assume twenty-four such lines, and they may obviously be regarded as forming the crests of successive advancing tide waves. Their shape, velocity, and direction of motion, will depend upon the configuration of the coast, the depth of the ocean and the various local causes which disturb the uniformity of their progress and cause divisions and interferences of divided waves. Were no disturbing causes present, the cotidal lines would correspond with the meridians, each line at a certain distance behind the meridian of the moon at its culmination. It is easy to see too that the cotidal lines must differ upon the eastern and western shores of a continent like that of North America, since the tide wave moves from east to west and is therefore upon the eastern coast an incident and upon the western a receding wave, the character of which is determined by the flow of water and its pressure from north, south and west. The cotidal lines of the Atlantic coast follow the general outline of the coast itself in a remarkable manner, the velocities measured in a direction perpendicular to the front of the waves varying from 24 to 40 miles per half hour. The tides on the Atlantic coast are of the regular semi-diurnal class; the diurnal inequality is not large and generally difficult to trace, though easily recognized at particular periods. On the Gulf coast, on the contrary, the tides are small, the semi-diurnal being masked by the diurnal waves. The tides of the Pacific coast are remarkably regular, both in the diurnal and semi-diurnal waves, and moreover rise to such heights as to render observation easy. Throughout the extent of coast examined, the cotidal lines for the Pacific are either sensibly parallel to or make but a small angle with the coast.

Tide tables for the principal sea ports of the United States have been published by the Superintendent of the Coast Survey by authority of the treasury department; they are based exclusively upon the observations of the survey, and will be extended and corrected as the survey advances. Meantime their value to navigators places them among the important results of the Coast Survey.

The tidal observations of the Pacific coast have casually led to a determination of great scientific interest, that of the average depth of the Pacific Ocean between the coasts of Japan and California. On the 23d of December 1854, an earthquake occurred in Japan by which the town of Simoda in the island of Niphon was destroyed. From the imperfect accounts which have reached us it appears that at 9 A. M. on that day the severe shock of an earthquake was felt on board the Russian frigate Diana, then lying in the harbor of Simoda. Half an hour later the sea came into the bay in an immense wave thirty feet in height, overwhelming the town and then receding. This advance and recession occurred five times, and by 2·30 P. M. all was again quiet. The depth of the sea during these changes varied from less than eight to more than forty feet. Upon the same day an extraordinary rise and fall of water was observed at Peel's Island, one of the Bonin Islands, and the tide continued to rise and fall during the day at intervals of 15 minutes, gradually lessening until evening.

The self-registering gauges at San Diego and San Francisco, exhibited on the 23d and 25th of December, remarkable irregularities of the tidal curves. Each gauge exhibits three sets of waves at short intervals, and there can be no doubt that these waves were produced by the same cause which determined the rise and fall of the ocean at Japan and the Bonin Islands. No record of the occurrence of an earthquake in Japan on the 25th of December has yet reached us, but the waters rose on the evening of that day at Peel's Island to the height of 12 feet. The distance of Simoda from San Francisco is 4,527 nautical miles, and from the same port to San Diego 4,917 miles. From these data and the times at which the disturbances occurred upon the two coasts, the waves from Simoda to California would move at about the rate of 360 miles per hour or 6 miles per minute, and would have a length of about 200 miles. This would give for the average depth of the Pacific about 2,200 fathoms or rather more than two miles. The publication of the official report of Admiral Pontiatine who commanded the Diana will probably permit more accurate determinations and explain the origin of the disturbance upon the 25th of December.

The publication of maps and charts constitutes, as may be supposed, one of the main objects of the survey. Upon the preparation of these an immense amount of labor is bestowed, the value of the work consisting chiefly in the accuracy of the details. In fact the whole subject may be fairly considered as constituting a special branch of science, with a system of signs and a mode of expression peculiar to itself. The most advantageous methods of presenting to the eye an easily intelligible view of the topography and hydrography of the coast have of

course occupied a very large share of attention. The general treatment of the subject, the arbitrary signs and other details being once settled, and the triangulation and plane-table work being finished, the maps are drawn and the work of the engraver begins. In order to render the results of the survey useful and accessible as soon as possible, and at the same time to exhibit the progress of the work, three classes of charts are engraved. These are termed sketches, preliminary charts, and finished charts. The sketches are of two kinds; progress sketches showing from year to year the advance of the work, and sketches of parts of the coast whether connected or detached. These are generally engraved by apprentices in the office of the survey and serve as subjects for practice. They are added to, year by year, and lithographic transfers published in the annual reports. In this manner it rarely happens that a year elapses between a survey and its publication in some useful shape. The preliminary charts serve nearly the same purpose as the sketches, but are larger and more finished.

The finished charts are divided into three classes. The first are called inshore or coast charts, and are drawn to a scale of $\frac{1}{20,000}$. They embrace the shore line, the interior as far as the nearest main road, and the hydrography for about fourteen miles from the shore. The second class embraces what are termed offshore or general coast charts, drawn to a scale of $\frac{1}{400,000}$, giving the shore line and the general topography of the coast, so that it may be recognized by the navigator, but omitting minute details and giving the soundings to the depth of at least 120 fathoms. The third class is composed of minutely detailed charts of harbors, anchorage, &c., exhibiting the sounding, tides and currents, the outline of the shore, the topography of the adjacent country, in short, presenting the complete results of the survey. These charts are drawn on scales varying from $\frac{1}{50,000}$ to $\frac{1}{20,000}$.

The finished charts require the work of first class engravers. These are so difficult to procure that in spite of the urgent necessity of the case and the unceasing efforts of the superintendent, there were but four first class engravers in the office at the beginning of the year 1856. Even these were only obtained by a special agent sent to Europe for the express purpose. With a wise liberality the charts are sold at the lowest possible rates, while the gratuitous distribution of the annual reports of the Coast Survey gives a still wider circulation to its graphical results.

As the greater number of maps and charts are engraved upon copper, and as the softness of this metal renders it impossible to obtain more than a limited number of impressions from a single plate, a method of reproducing the plates themselves becomes indispensable. Such a method is found in the electrotype pro-

269

cess, which is now applied in the office of the survey upon a very large scale, and which has there received a development and a perfection which leaves little to be desired. We believe that we hazard little in asserting that as regards the thickness and quality of the metal precipitated, the size of the plates, the prevention of adhesion between the original plate and that deposited, and the absolute command of the whole process, the electrotype operations of the Coast Survey are unequalled in any country.

It has very recently been found possible to print from thin electrotypes merely folded over the edges of a stout plate of metal which serves as a support or back. In this manner plates of the first quality can be furnished for about one-third of the cost of those deposited of the usual thickness. Processes are also employed by which small plates can be pieced out in any direction and to any desirable size, no line of junction being visible between the original and the addition.

The particular apparatus and arrangements employed in the electrotype department have nearly all originated in the department itself, and have been fully described in the annual reports of the survey and in this Journal. It cannot be doubted that they have exerted a positive influence upon the progress of this branch of art.

It was just that an elaborate and complete survey of the phenomena of the Gulf Stream should be executed by a descendant of Franklin, and it may well be conceived that the peculiarities of that magnificent current, alike interesting from the practical and the scientific point of view, have engaged a special share of attention. In accordance with the direction of Congress that a map exhibiting the state of our knowledge of the Gulf Stream should accompany the report of 1853, the work of investigation was pushed forward during that year and results of great interest obtained, and illustrated in two charts appended to the report. These results show that the Gulf Stream is not, as generally supposed, a single broad current of warm water flowing in a northeasterly direction, but that it is in reality an aggregate of separate currents alternately cold and warm, and exhibiting a certain degree of parallelism. The method of examination employed was the very obvious and natural one of running numerous sections across the Stream and observing the depth of the water and the temperature at different depths. The number of positions observed in each section was made to depend upon the more or less rapid changes of temperature, and the temperatures were observed at the surface and at depths of five, ten, twenty, thirty, fifty, seventy, one hundred, one hundred and fifty, two hundred, three, four, five and six hundred fathoms, so as to reach into the cold polar currents lying beneath.

In this manner ten sections were surveyed, the temperatures being determined for moderate depths with Six's self-registering thermometers, and for greater depths with Saxton's metallic thermometers. If we employ the term Gulf Stream in its broadest sense and understand by it the aggregate of *all* the warm currents flowing from the Gulf of Mexico into the north Atlantic, a glance at the Coast Survey map shows us at once the existence of at least four distinct warm currents separated from each other by cold bands, a fourth cold band separating the first or inner warm band from the shore. Each warm band is narrowest and warmest in its most southerly section—that of Cape Canaveral—and becomes broader and cooler in its progress northward and eastward, while its boundaries become less and less clearly defined. The most cursory observation shows that these bands are parallel to the outline of the coast, and that as we recede from the shore upon any section they become broader, cooler, and less sharply separated from the intervening cold masses. The Gulf Stream proper forms the second warm current in order from the shore. As might naturally be expected from its greater density the colder water tends to occupy the lowest position, but instead of forming a level plateau it follows the irregularities of the bottom. This again determines the vertical distribution of the warm currents, and we find accordingly that in each section, as far as examined, the curves which represent the depths corresponding to equal temperatures are sensibly parallel to the contour of the bottom. This fact is well illustrated on the Charleston section, where the bottom of the ocean exhibits remarkable irregularities. Thus the depth on this section gradually increases to a distance of fifty-three miles, when it suddenly descends to upward of six hundred fathoms. Ninety-six miles from the coast we find a range of hills, having a height of eighteen hundred feet and a base of about eleven miles on the seaward side. One hundred and thirty-six miles from the coast occurs another range of hills fifteen hundred feet high and twenty-eight miles base toward the shore, and six hundred feet high with a base of about seventeen miles on the outer side. Beyond this there is a more gradual rise. Now the forms of the curves of equal temperature resulting from multiplied observations at different depths along the section correspond exactly to the outline of the bottom.

Perhaps the most remarkable peculiarity of the Gulf Stream is what has been appropriately termed the "cold wall," a mass of cold water lying between the warm water and the shore, and sharply defining the inner boundary of the great current. The change from the warm water of the stream to the cold body of water inside of it toward the shore, is particularly sudden and well marked in the northern sections, but may also be easily distinguished south of Cape Hatteras. In the cold water in-

shore from the Gulf Stream a current setting southward has been observed, as also in the cold band outside the axes. It is not yet certain however that these are permanent currents.

Another remarkable fact is observed in comparing the temperatures of the northern and southern portions of the Gulf Stream. Taking the maximum temperatures at twelve or fifteen fathoms beneath the surface, there is, as a general rule, an increase of temperature in passing southward. But in successive years we find the highest temperature at twelve fathoms, on the Cape Henry section, higher than at Hatteras, while the temperature in the axis of the stream at Sandy Hook in July, 1846, was higher by five and one half degrees than at Charleston in June, 1853. The underlying polar currents are as distinctly marked in the southern as in the northern latitudes. Thus in latitude 37° 20′ the temperature at a depth of four hundred fathoms below the warmest water of the Gulf Stream in August, 1846, was 49° Fahr., while in the same position in latitude 28° 20′ it was 48½° Fahr. The fact that the side limits of the polar current recede from the shore as the depth increases is clearly marked on all the sections.

It is hardly necessary to observe that much remains to be done to complete the survey of the Gulf Stream. But it may be justly asserted that the results obtained by the Coast Survey have placed the whole subject in an entirely new point of view and have contributed greatly to the solution of one of the grandest problems in physical geography. It may be remarked in this place that the most recent observations fully confirm the theory of Franklin that the Gulf Stream makes a complete circuit in the Atlantic, returning again to its source. A branch of the main current is however thrown out toward the coasts of Ireland and Norway, and is thence reflected toward the Arctic ocean. This branch appears to offer the most feasible passage to the open polar sea, to the discovery of which so much attention has been recently directed, and which appears to be in fact only a forgotten reality.

We have adverted to the observations of latitude, azimuth and longitude as requisite to determine the position on the earth's surface of the stations, the relative situation of which as to distance and direction is ascertained by triangulation. They serve thus incidentally to determine the *figure* of that portion of the earth over which the work extends. While in other countries extensive operations have been executed for the special purpose of measuring arcs of meridians and parallels, the Coast Survey furnishes those important additions to one of the highest departments of physical knowledge, without any expenditure not absolutely necessary for the perfect attainment of its most direct and practical objects. An individual arc of 3½ degrees from

Nantucket to Mt. Blue in Maine—another of 2½ degrees from the head to the capes of Chesapeake Bay, which may be extended 1½ degrees farther to Cape Hatteras, and an arc of the parallel extending 4° from Nantucket to New York are among the results already obtained. They exhibit a general conformity to the elements of the earth's figure deduced from all previous measurements, while they show marked local variations which have become the subject of special study.

These variations in the direction of the plumb-line are found to be not only such as would result from want of uniformity in the geological structure in the immediate vicinity of stations, but to extend like undulations over considerable regions.

In order to obtain these "station errors" as free from residual instrumental errors as possible, the capabilities of various instruments and methods for determining latitude have been successively tried, large vertical circles, repeating circles, the prime vertical transit, the zenith telescope (or equal altitude instrument), and Airy's zenith sector. The latter instrument is the most perfect of its kind, possessing many improvements on the zenith sector of the British Ordnance Survey, the only other of the kind in existence. The accuracy of its results, however, is rivalled by those of the zenith telescope, the application of which to observations of latitude by equal meridian altitudes of stars to the north and south of the zenith is of American origin and has been greatly perfected in the Coast Survey. Combining portability and facility of use, with great accuracy, it has become the favorite instrument, and no observer, who has ever used it, is willing to return to others.

In order to bring out the various elements of error, observations have been made at the same stations with different kinds of instruments, with the same instrument by different observers, and by the same observer with two different instruments of the same class. By a consistent application of the method of least squares, the observations have been severely scrutinized, and their relative values determined without the admission of anything like arbitrary preference.

Looking at the observations of azimuth we again find the Coast Survey testing the relative value of known methods and perfecting them or devising new ones, not only *proving* but *improving* all. Abandoning the methods by observations of the sun at low latitudes and by transits of stars over the verticals of stations, as involving too largely the difficult element of *time*, the observations of azimuth have been made principally on close circumpolar stars, especially the pole-star. The reduction of observations made near the time of the star's greatest eastern or western elongation, has been greatly facilitated by the use of a simple formula. An elegant method has been introduced, of

observing the star at corresponding equal times before and after either culmination, by which arrangement the labor of computation is almost entirely saved, the mean of each pair of corresponding observations giving at once the meridian. The observations of azimuth have shown irregularities to exist in the direction of the plumb-line similar in kind and amount to those indicated by the latitude observations.

One of the most important and striking features of the methods of the Coast Survey is the total absence of eclecticism, which in former times was an acknowledged principle with observers, and to which there is even now a strong leaning in some quarters. The observer may indeed choose circumstances favorable to his purpose and may affix to the observations a statement of facts affecting their quality, but here the influence of his judgment or bias ceases. The observations are made to tell their own story, and by the searching test of the method of least squares their relative weight is ascertained, and rejections, if necessary, are made according to Peirce's criterion. The step is taken or combination made; but the reasons for it are such as to be necessarily arrived at by every one, according to the principles laid down. All observations are liable to more or less uncertainty, and there are probably classes of errors which no number of observations or variety of methods can entirely eliminate; it will always be necessary to discriminate, and to apply small corrections to the results in order to make them fulfil the theoretical relations existing between them. When this is done according to fixed mathematical rules all uncertainty vanishes, and truth must be the gainer, while on the other hand when it is allowed to be done according to personal judgment or bias, results must vary with different computers, and the door is opened to falsification and fraud.

The Coast Survey is at present under the general control of the Treasury Department, which appoints its officers and regulates their compensation. The Department furthermore authorizes all expenditures, approves the plans and estimates of the superintendent, and makes general regulations for the work under the law. The immediate agent of the Treasury Department is the superintendent, who arranges the plan of conducting the work, attends to its business details, issues instructions for its execution, and is responsible for the scientific accuracy of the whole. All persons and parties employed report directly to the Superintendent, who in turn presents an annual report to the Department, offering a complete and detailed account of the work done during each year. The annual reports are amply illustrated by maps and charts, and are extensively and gratuitously distributed. The distribution is made by the assistant in charge of the office who has all the reports in his possession and who distributes them according to a prepared list.

In addition to the laborious duties of the general direction of the survey, and inspection of the parties, the Superintendent himself personally assists in the execution of the work, taking the field and making observations as required. The different parts of the work are entrusted to assistants who act as directed by the Superintendent and are responsible to him, the office of the survey being considered as a party with an assistant in charge. Each field party consists of a chief, who may have one or more assistants, and of several hands. In the office, computers, draughtsmen, engravers, printers, mechanics, clerks, &c., are employed as occasion may require.

In the organization of the survey three classes of persons are recognized by law. These are civilians, officers of the army, and officers of the navy. The civilians form the permanent nucleus of the survey. Their salaries are under the control of the Department, and they are promoted or lowered according to their merit as measured by the results of their work. As they are not, save only in exceptional cases, subject to frequent changes, they form a constantly efficient and trained body and preserve uniformity in the business and methods of the survey. Such a nucleus is obviously indispensable as the whole work might otherwise be disorganized by calls for the professional services of officers of the army and navy. Thus on the breaking out of the Mexican war all the officers of the line of the army and part of those of the staff, serving on the Coast Survey, were detached for active military service.

The officers of the army and navy are detailed by the heads of their respective departments on the application of the superintendent through the Treasury Department. They receive no extra emolument from the Coast Survey and are of course liable to be frequently changed. Their employment is, however, very advantageous both to the Survey and to themselves, since they furnish to the former active, intelligent, and zealous assistants, while they of course profit by the peculiar scientific training offered in the service to which they are detailed.

In fact it is easy to see that there is no part of the hydrography or of the topographical surveys which does not furnish advantageous practice to an officer in either branch of the service. The topographical engineer finds employment in his own department. The survey of harbors and the study of tides, currents, shoals, entrance channels, and all those peculiarities which distinguish the different seaports, are of the utmost importance in determining the proper sites for fortifications and permanent defenses. They furnish weapons of offense as well as defense. In the recent European war the success of several important operations depended wholly upon the skill and promptness with which surveys were executed by naval officers. But

275

even in time of peace the advantages of having on board of every ship thoroughly trained hydrographers can hardly be overestimated, for commerce, and therefore civilization, profits by every new harbor surveyed, every channel sounded, every current whose course and velocity are traced. The law requires that as many officers of the army and navy be employed as may be compatible with the successful prosecution of the work.

The work of the Coast Survey is naturally divided into field and office work. The field work consists in the actual surveys and observations of various kinds and is either original or of verification. The methods of conducting the work are laid down in general instructions by the superintendent who also directs what scientific processes and instruments are to be employed. The assistants make monthly reports in prepared forms and keep daily journals which are placed on file in the office. A general report is also made to the superintendent on taking and leaving the field, and in the month of October of each year for the annual report.

The office work consists of computing, drawing, engraving, printing, &c., and is for the most part under the care of the assistant having charge of the office. The publication and distribution of maps and the care of the accounts and property are placed in the charge of the general disbursing agent who gives bond to the Treasury Department.

The minute attention required to secure accuracy in the computations of the Coast Survey is well exhibited in the system of checks employed. The field parties in the first place compute their own work and a second computation is then made independently by persons having no connection with the field work. The assistant in charge of the office then examines and compares the two computations and reports any discrepancies to the superintendent for examination. The records of observations and calculations are put in form for publication by the assistant in charge of the office under the direction of the superintendent, but the records and results now publishing as a separate work are under the charge of a special officer. Drawings are first executed by the field parties and reductions of these to the scale of publication are then made by regular draughtsmen in the office, and these drawings are finally revised and verified. It is almost needless to mention that all the topographical signs, forms and sizes of letters, &c. are prescribed by rule so as to be uniform. This subject, as already mentioned, is one which required special study. Thus the scale of shade is made to express the degree of slope by the strength of the hachure lines and the distance between them. The engraving of the maps and charts is under the charge of an assistant who verifies all engraved maps; from

him they pass to the assistant in charge of the office who finally reports them to the superintendent.

The prices of the maps and charts are fixed by the Treasury Department upon the general principle that the sale should pay for the cost of paper and printing. The small maps are sold for fifteen and the larger for twenty to fifty cents. Besides the distribution by sale many copies are forwarded to literary, scientific, and commercial institutions, as designated by the Treasury Department.

In all cases the original records of observations and field work are transmitted to the office after duplicates have been made by the field parties. These are deposited in a fire-proof building in charge of the general disbursing agent. The instruments belonging to the Survey, properly marked and numbered, are also deposited in a fire-proof building, the repairs being almost always executed in the office.

The general estimates for the Survey are made by the superintendent who controls the expenditures for field and office work. On receiving his instructions for work, which usually state the limit of expenditure, the assistant makes an estimate for the number of hands required and for the general expenses of his party. This estimate, after the approval of the superintendent, is the authority of the disbursing agent in settling the accounts. The rules of the work require that a voucher in the form of a receipt be presented for all sums exceeding one dollar.

The chief of each party keeps an account of the party disbursements and transmits it to the general disbursing agent who supplies funds, audits accounts, and is responsible to the Treasury Department.

Beside the very numerous duties of supervision and of personal exertion which are discharged by the superintendent, there are many special subjects which are under his immediate direction and in charge of a special assistant. Such are the researches upon the tides and the Gulf Stream; the preparation of the records and results for publication; the longitude work both astronomical and telegraphic; experimental researches on various practical subjects bearing directly upon the survey; the expansion of paper and the various modes of making and preparing it; the covering of copper plates with surfaces of iridium; improvements in different kinds of engraving, and other matters too numerous too mention.

The amount of labor, skill, and care required to maintain the harmonious action of the different parts of an organization like that of the Coast Survey may easily be imagined, and we may not unreasonably ask how many scientific men in our own, or in any other country, possess the extent and variety of knowledge combined with the tact and the executive capacity which such a work demands, and which it has called forth.

The Coast Survey is a national work of which we may well be proud. No other geodetic operations have ever been conducted upon so gigantic a scale, or have yielded such fruits of usefulness and honor. The work is worthy of the national spirit which originated it and which it illustrates. It is one of the great ideas which we have carried out. Like every great work it has a permanent value, and if national in conception and in execution, is universal in its example and its utility. It is estimated that if the annual appropriations are continued upon the present scale, the survey can be completed in about twelve years. May we not hope that it will continue to command the sympathy and support of every patriot, and that it will be permitted gloriously to complete that which has been so worthily begun.

278

REPORT

ON THE

HISTORY AND PROGRESS

OF THE

AMERICAN COAST SURVEY

UP TO THE YEAR 1858.

BY THE

COMMITTEE OF TWENTY

APPOINTED BY THE

AMERICAN ASSOCIATION FOR THE ADVANCEMENT OF SCIENCE,

AT THE MONTREAL MEETING, AUGUST, 1857.

20

279

CONTENTS.

Introduction Explanatory, - - - - - - - - 3

Character and Primary Objects of a Geodesic and Hydrographic Survey, - - - - - - - - 5

Methods of Practice Employed in the Conduct of a Geodesic and Hydrographic Survey, - - - 11

Action of other Governments in Regard to such Surveys, - - - - - - - - - - - 16

First Organization of the Coast Survey of the United States, - - - - - - - - - 18

Expansion and Modification of the Coast Survey under the present Superintendent, - - - 21

Details of Coast Survey Operations up to 1858, - 22

Results of the Coast Survey. Their Bearing upon the National Welfare, and upon the Advancement of Science, - - - - - - - - - 45

Direct Results: Benefits to Navigation and Commerce, 45

Statistical Table of Progress, - - - - - - 49

List of Published Charts, - - - - - - - - 51–55

Testimonials from the Mercantile Community, - - 61

Collateral Results: Additions to the amount of Scientific or Useful Knowledge, - - - - - 65

Opinions of Scientific Authorities on the Coast Survey, - - - - - - - - - - - 82

Conclusion, - - - - - - - - - - - - 85

280

REPORT

ON THE

HISTORY AND PROGRESS

OF THE

AMERICAN COAST SURVEY

UP TO THE YEAR 1858.

BY THE

COMMITTEE OF TWENTY

APPOINTED BY THE

AMERICAN ASSOCIATION FOR THE ADVANCEMENT OF SCIENCE,

AT THE MONTREAL MEETING, AUGUST, 1857.

Blank page retained for pagination

INTRODUCTION EXPLANATORY.

At the meeting of the "American Association for the Advancement of Science," held in Montreal, in August, 1857, a resolution was adopted, upon the recommendation of the Section on Physics, constituting the gentlemen immediately hereinafter named a committee to inquire and report on the Coast Survey of the United States:

1. JUDGE J. K. KANE, President Amer. Phil. Society, Penna.
2. GEN'L JOSEPH G. TOTTEN, Chief Engineer U. S. A.
3. PROF. BENJAMIN PEIRCE, Harvard College, Mass.
4. PROF. JOHN TORREY, U. S. Assay Office, N. Y.
5. PROF. JOSEPH HENRY, Sec'y Smithsonian Institute, D. C.
6. PROF. J. F. FRAZER, University of Pennsylvania, Penna.
7. PROF. WM. CHAUVENET, U. S. Naval Academy, Md.
8. PRES'T F. A P. BARNARD, University of Mississippi, Miss.
9. PROF. JOHN LECONTE, College of South Carolina, S. C.
10. PROF. WM. M. GILLESPIE, Union College, N. Y.
11. PROF. F. H. SMITH, University of Virginia, Va.
12. PROF. W. H. C. BARTLETT, U. S. Military Academy, N. Y.
13. PROF. WOLCOTT GIBBS, Free Academy, N. Y.
14. PROF. STEPHEN ALEXANDER, College of New Jersey, N. J.
15. PROF. LEWIS R. GIBBES, Charleston College, S. C.
16. PROF. JOSEPH WINLOCK, Sup't. Am. Naut. Alm., Ky.
17. PROF. JAMES PHILLIPS, University of North Carolina, N. C.
18. PROF. WM. FERREL, Nashville, Tenn.
19. PROF. EDWARD HITCHCOCK, Amherst College, Mass.
20. PROF. JAMES D. DANA, Yale College, Conn.

Upon receiving notice of this action by the Association, the chairman addressed a circular to his associates of the committee, in the following form:

SIR,

I beg leave to transmit to you the copy of a *Resolution adopted* by the American Association at its last Meeting, and to invite your advice and guidance in the preparation of an appropriate Report to that body.

I have supposed that the several topics, which such a Report should embrace, may fitly arrange themselves under the following heads:

1. The character and primary objects of a Geodetic and Hydrographical Survey.

2. The action of other Governments in regard to such Surveys of their Territory and Coast.

3. The former organization of the Coast Survey of the United States—its progress and results up to the year 1844.

4. The Modifications our Coast Survey has undergone since—its expansion—the novel and improved methods and appliances of which the present Superintendent has availed himself, and the collateral researches which these have favored.

5. Its results up to the present time, general and particular—Their bearing: *First*, On navigation—facilitating the determination by the navigator of his position, by reference to

soundings, tides, currents and landmarks—indicating perils and positions of refuge—discovering and defining channels, and noting the changes they have undergone—and fixing the proper sites for light-houses and beacons: *Second*, On the protection of the coast—suggesting the localities for forts, docks, magazines, etc.: *Third*, On the geodetic surveys which may be proposed by the several States—facilitating them by furnishing a chain of base lines, and determining the absolute position of points: *Fourth*, On great works of communication—in the discussion of traces and gradients.

6. The judgments which have been expressed by scientific men in other countries, and our own, as to the value of the work and the efficiency of those who have it in charge.

While soliciting from you, however, such contributions as your leisure may permit, under any of these heads, I would not be understood as desiring to circumscribe the range of your communications, nor indeed as defining the subjects which should enter into the Report. It will be my object, unless otherwise instructed by the Committee, to submit to the Association, and through it to the community, a popular view of the objects and course of the Survey, and of the influence it is exerting, and may continue to exert, on different interests of the country; but in regard to this, as to all other points, I shall be happy to avail myself of your suggestions. It will be for you to determine how far they shall be incorporated in the general report, or whether they shall be recognized as proceeding from yourself.

I may be excused for adding, in conclusion, that I shall esteem it a great personal favor, if you will allow me to be assured of your coöperation at an early day.

I am, Sir, with very great respect,
Your obedient servant,
J. K. KANE.

To this circular the members of the committee replied very generally, some of them at large; and the chairman had already made some progress in the analysis of their contributions, and in arranging these, and the other materials gathered for his report, into an available shape, when his labors were arrested by his lamented death— an event at once calamitous to his country and to science, which, to the great grief of his associates, took place on the twenty-first of February, 1858.

At the meeting of the Association, held in Baltimore, in April, 1858, the papers of Judge Kane, relating to this subject, were exhibited to the members of the committee then present. As chairman in his place, President F. A. P. Barnard, of the University of Mississippi, was appointed, and it was agreed that the publication of the report ought to be made as soon as possible after its completion.

The new chairman not being in attendance at Baltimore, there occurred an unavoidable interval of some duration between the adjournment of the Association and the transfer of the papers to him. Since obtaining possession of them, however, he has been as expeditious in turning them to use as circumstances would allow, following in general the arrangement of topics laid down in the letter of Judge Kane, cited above; and now, in concluding his labor, he feels constrained to express his unfeigned regret that it had not been permitted to the abler hands to which the task was originally assigned, to execute the work which they had so judiciously planned.

To those of his associates on the committee, whose contributions relating to subjects embraced in the report communicated to the former chairman have passed into his possession, he begs leave here to tender his thanks for the valuable aid which they have afforded him.

University of Mississippi, Oxford, Nov. 2, 1858.

REPORT

ON THE

COAST SURVEY.

PART I: OBJECTS, HISTORY, METHODS.

CHARACTER AND PRIMARY OBJECTS OF A GEODETIC AND HYDROGRAPHIC SURVEY.

TO AN industrious and enterprising people, zealously engaged in cultivating the arts of civilized life, and occupying a territory bordered to any considerable extent by the ocean, a correct acquaintance with the physical features which mark their marine boundary is a matter of such moment, that we may properly regard it as a kind of economical necessity. To such a people, the ocean is the great outlet of production, and the highway over which are perpetually flowing back upon them the products of other lands. Without an exchange of commodities constantly in this manner going forward between different and distant nations, it is impossible that the industry of any people should be stimulated to an efficiency in any degree commensurate with its capacities: it is impossible that its inventive genius should be awakened, or its artistic skill developed, or its dormant natural resources evoked from their slumber, or, in a word, its powers of production generally brought into exercise in so effectual a manner as to promote most successfully and satisfactorily its advancement in the road to national wealth, or its elevation in the scale of national greatness. An isolated nation, with no natural channel for the efflux of its surplus production, will have little incitement to produce after the demand of its own consumption shall have been satisfied. The arts, moreover, among such a people, unfostered by the encouragement of a vigorous demand, will make but sluggish progress in the march of improvement, and will contribute but feebly to the multiplication of the comforts or the elegancies of life, to the growth of æsthetic culture, or to the increase of the general wealth.

It is true that in a territory wide of extent, and possessed of diversified resources, industry may find a stimulus in the upspringing of a domestic commerce. But it is not true that any activity in the exchange of productions at home can diminish the importance of commerce with foreign nations, or render it a matter of trivial moment to any people whether or not it shall avail itself of the natural advantages it may possess to foster such a commerce. It is accordingly matter of history, that every maritime people that has ever, since the days of the Tyrians, made itself conspicuous among the nations for its intelligence or enterprise, or has succeeded in securing to itself a controlling position in the affairs of the human race, political or social, has ever likewise found in foreign commerce one of the most prolific sources of its prosperity, and has been accustomed to keep a vast amount of its wealth constantly afloat upon the waters, and exposed to all the hazards which brood in the bosom of the deep.

These hazards can never be totally annihilated. They will always be the occasion of a greater or less amount of annual loss. And maritime commerce, considered as one of the springs of national wealth, will always be by so much the less productive as the dangers to which it is exposed, and the losses to which it is consequently subject, are greater. Any expedients, therefore, by which these dangers and these losses may be diminished, any improvements, for example, in the construction of vessels, or in the art of navigation; or any additions to human knowledge in regard to the laws which govern the winds or the waves in their seeming caprices, or in regard to the secret dangers which lurk invisibly in the ocean's depths, will inevitably in due time be felt, in the increased returns with which they will reward commercial enterprise, and in the stimulus which they will bring to the growth of Commerce itself. For it is to be observed, that, in the diminution or annihilation of the hazards which attend any speculative adventure of capital, a nation is profited not merely through the immunity from loss of each individual adventurer, but, beyond that, through the encouragement held out to other capital, unemployed or employed unprofitably, to embark in a productive channel.

The dangers which attend the mariner are various. Some of them accompany him everywhere, and are capable of being reduced or eliminated only by perfecting the science of navigation itself, by improving the methods of naval architecture, and by insuring to practical seamen the highest nautical skill, by providing for their thorough training to their duties. Others, however, are local, and arise not out of the want of skill or science in the navigator, or out of the fragility or ill-construction of his vessel, but simply out of his unacquaintance with the natural features of the sea-bottom beneath him; with the currents of the surface on which he floats; with the degree of proximity or distance of reefs, or shoals, or dangerous shore-lines, or with the courses which he should follow in order to escape so perilous a neighborhood. Such local dangers are for the most part found in the

vicinity of the land. Upon the high seas, indeed, the practised navigator dismisses apprehension; and though, as he leaves his port, he may lay his course with a severely scrupulous accuracy, and trace his way by buoy or beacon, or feel it out with an almost timid caution with the lead, yet no sooner does he see the blue water rolling beneath him, than he experiences a sense of security as complete as that which the landsman feels in the shelter of his quiet home. As he approaches the port of his destination, his anxieties return, and his vigilance is once more aroused. At this critical period, ignorance or error may bring the most prosperous voyage to a sudden and fatal termination. The shores which mark the approaches to the most frequented seaports of our continent, have been a hundred times strown with wrecks of vessels dashed in pieces just as the ill-fated voyagers whom they bore were congratulating themselves that all their dangers were over. The wealth which has been engulfed, almost within sight of a single American port, can only be told by millions; and the lives which have been swallowed up along with it present a melancholy total of many thousands.

Against the recurrence of disasters so calamitous, no absolute security can ever be provided. But it is obvious that their liability to occur may be very greatly reduced, by removing, so far as human effort can remove, the principal cause of their occurrence, which is simply want of correct knowledge of the natural features of the coast, as they appear exposed to view, and as they lie concealed beneath the waters. Accordingly the governments of all maritime nations have earnestly endeavored, especially in modern times, almost without regard to the question of expense, to secure a faithful and minute delineation and description of their entire ocean boundary, both as to its visible outline and as to the character of the soundings which lead from it into deep water. For the purpose of obtaining this information in the form most severely exact, systematic surveys, geodesic and hydrographic, have been instituted and sustained for many years, by the principal commercial powers of Europe; the results of their operations having been condensed, or being still in process of condensation, into the form of elaborate hydrographic maps, or charts, for the guidance of the navigator, and also for the assistance of the government itself, in selecting proper sites for the lighthouses, buoys and beacons, which are to mark the available channels, or to warn against hidden dangers. Such a survey of our own coast, carried on under the authority of the Federal Government, has been also for a number of years in progress; and it is in regard to the past history and present condition of this great public work that the present committee has been appointed to inquire and report.

It is apparent, from what has been said, that the leading object directly proposed in the conduct of the American survey, as in that of every other, is to secure the safety of the wealth hazarded in commercial enterprises, by reducing to a minimum the dangers of navigation. But it may by no means hence be justly inferred that the benefits of such a survey are lim-

ited to particular localities, or confined to particular classes or portions of the people; that they accrue, for example, exclusively to the great marts of commerce, or to the individuals directly and personally concerned in foreign trade. To any one who attentively considers the causes which give to property its value, it will be manifest that these benefits extend to every citizen, no matter in what part of the country he may reside, provided that he has anything whatever at stake in the prosperity of the commonwealth, even though it be no more than the labor of his own hands. The cotton-grower of Tennessee, and the tobacco-planter of Kentucky, whose agricultural products seek a market in the old world, are no less positively interested in whatever may diminish the dangers of the seas than the merchant who, without producing himself, makes it his business to convert their productions for them into the equivalent values they require. This remark is one of great importance. Nothing in these days is more common than to hear the three great departments of human industry—agriculture, manufactures and commerce—spoken of as if they were interests entirely independent of each other, or even absolutely antagonistic. Yet, without the productions of agricultural and manufacturing industry, commerce would have no material; and without the constant, and convenient, and rapid exchanges which commerce effects, agriculture and manufactures could have no life. Whatever makes commerce easy, or diminishes the cost or the hazard of its operations, encourages productive industry in every form, and renders its rewards more certain and more abundant. For the sake of illustration, let for one moment, the effect, so often illustrated under the eyes of the present generation, be considered, of opening up to public use a new line of communication, by means of a railroad or canal. There are thousands of farmers in this country, who, immediately on the occurrence of such an event, have seen the products of their labor practically doubled or tripled in value, through the consequent reduction in cost, trouble and loss of time, experienced in communicating with markets. There are exhaustless deposits of mineral wealth in every quarter of the country, which from being absolutely valueless, because unavailable, have become sources of rich income to their owners, simply in consequence of the creation of such artificial channels of transportation. Now, as the aliment of commerce is the surplus production of the country, it is self-evident that, if the ocean were to become suddenly impassable, this surplus production would be to the nation precisely what the unsalable produce of the isolated inland farm, and the slumbering wealth of the inaccessible mineral deposits, are to their individual owners. Since it could find no efflux, it could bring back no return. And though, were such a state of things suddenly to supervene upon the arrangements of business as they actually exist, the first ruin would fall, of course, upon the commercial holders of this surplus production; yet it requires no argument to prove that the permanent suffering must fall ultimately upon those who created this surplus—must fall, in short, upon the whole body of producers.

in the country; and this, too, without any regard to the question whether or not each has contributed his distinct share to the visible surplus, or whether only his industry has been employed and rewarded by those who have actually done so. And any conclusion at which we may legitimately arrive, in regard to the effect upon the national welfare, of an entire extinction of foreign commerce, arbitrarily supposed to occur, is measurably true also on the supposition that the same commerce is obstructed by impediments which embarrass its operations, but fall short of its total extinction.

Such impediments do actually exist in the natural dangers of the ocean border. The sea-coast lies outstretched, a continuous, unbroken barrier, obstructing every avenue through which it is possible for the surplus production of the country to find its efflux or receive its returns; laying the whole industry of the nation, in every department, and throughout the entire extent of its territory—in the pioneer settlements of the West no less than in the busiest of the commercial *entrepôts* of the Atlantic seaboard—under a perpetual and inexorable tax. To effect a reduction of this tax is the present business, as it was the original design, of the Coast Survey; and the interests of the States which lie most deeply situated in the heart of the continent are not less positively involved in the careful execution, and in the prosecution to completion of this great work, than those of any other.

To such as have never attentively reflected upon this important subject, it may not readily occur in how great a variety of modes the knowledge gathered in a properly executed survey of the coast is instrumental in preserving the seaman from the disasters to which he is liable. There is no difficulty, indeed, in understanding how, if the practicable channels are traced out and marked by buoys, and if the natural landmarks visible at a distance are accurately mapped down, with their bearings as observed from point to point, and if artificial beacons are erected on the headlands, or on the reefs or shoals, a navigator with the chart before him may be able, in clear weather and by day, to pick his way in safety by the eye alone. There is no difficulty in understanding how he may, even on clear nights, be sufficiently secure in depending upon the guidance of the beacon-lights of which the survey has fixed the most advantageous localities. But it is not in the broad light of day, nor yet when the heavens are serene by night, and the landmarks and beacons are easily discernible, that ocean disasters occur most frequently, or take the navigator most usually by surprise. The moments by far the most perilous are those in which the solitary voyager is, as it were, walled out from the world by an impenetrable barrier of mist, limiting the range of his vision, in every direction, to a distance often not greater than his own vessel's length.

In such a situation of perplexity, helpless as it may appear, the charts of a perfect coast survey furnish a guaranty of safety, which, though it exacts of the mariner a more untiring vigilance, is yet no less to be relied on than the guidance of visible beacons. The cast of the lead informs him of the

water beneath him, and of the nature of the materials which form the bottom encountered by the plummet. A few successive casts indicate to him the degree of inclination and the direction of the slope. With these elements to guide his judgment, he finds his place upon the chart without difficulty, and traces the line of his progress step by step. And it is the description of information here indicated which is most valuable of all to sailors, since this is the only species which is available when they are in their greatest peril. Yet it is obvious, without argument, that it is a kind of information which can only be perfectly gathered by patient, persevering and long-continued labor; and which, in consequence of the changes continually going forward in the bed of the sea, can only be preserved in its accuracy and its value, by frequent and careful revision.

Another mode in which a scrutinizing examination of the coast contributes to the safety of navigation is, by the discovery of sheltered bays or inlets to which vessels may resort in stress of weather, and where they may lie in safety till the winds and waves recover their tranquility. Such *harbors of refuge*, as they have been not unaptly called, have been found to exist in many parts of our extended coast, having been quite unknown even to the sailors who frequent most the neighboring seas, until the searching operations of the Coast Survey had brought them to light. Commerce having failed, for whatever causes, to appropriate these harbors to its uses, whether on account of their inconvenient situation in reference to the interior of the country, or on account of the wildness or sterility of the surrounding territory, or simply for the reason that their capabilities had been overlooked; all the benefits which have flowed from their discovery, all the lives which they have rescued from destruction, and all the wealth which they have snatched from the jaws of the deep, are undeniably to be passed, wholly and entirely, to the credit of this great public enterprise. And were it possible to strike a balance between the amount of outlay, on the one hand, by which results of such value and importance have been accomplished, and the amount of material wealth, on the other, which they have redeemed from the waves, it would unquestionably appear that the sum-total of all the appropriations which have been made from the public treasury for the prosecution of the work from the beginning, have been amply more than overpaid by the benefits which have crowned some of these, its subordinate and least conspicuous achievements.

But though the leading object contemplated in a survey of the coast is to provide for the security of navigation, and thus to subserve the interests of commerce and of humanity, still there are other important ends incidentally but at the same time necessarily promoted in the conduct of its operations, which are too important to be disregarded, and which must be taken into the account, if we would comprehend the full measure of the benefits which such a work is capable of conferring upon mankind. These will be more particularly exhibited in the detailed account which will presently be given, of the

results which have been already brought out, in the prosecution of our own Coast Survey. It is sufficient here to state in brief, that they embrace the accurate determination of favorable bases for the institution of trigonometrical inland surveys, which may lead to the construction of scientifically exact maps of the territory of the several States; of observations on the phenomena of terrestrial magnetism, and the laws which govern their variations; of investigations of the difficult problems connected with the irregularities of the tides and of the winds; of the exploration of the Gulf Stream and other ocean currents; of the study of the distribution of submarine deposits by these currents, and the formation of such deposits near the points of discharge of the numerous rivers which intersect the coast; of the examination and settlement of questions relating to suspected or probable changes of the relative level of land and sea, and other points of the highest interest to geological science; of the determination of the sites most advantageous for the construction of national works of defence, and many other matters of economical or scientific interest, less general in their character.

METHODS OF PRACTICE EMPLOYED IN THE CONDUCT OF A GEODETIC AND HYDROGRAPHIC SURVEY.

Such being the diversified and valuable ends, for the attainment of which so numerous and elaborate and extensive hydrographic surveys have been set on foot in modern times, along the coast lines of our own and of foreign countries, it is consistent with the design of this report to sketch in outline the methods of practice which have been employed in the actual execution of works so magnificent, so truly national in character, so incalculably useful, and so honorable to the governments which have undertaken them, and of whose wisdom they are among the most splendid and enduring monuments. The information here embodied would be unnecessary and out of place, were it to be addressed to geometers or physicists only: but if the committee rightly interpret the purpose of the Association in their appointment, it is a part of their duty to prepare such an account of the great public work referred to them for review, as may be proper to lay before the reading public at large.

Geodesy. — With the simple processes involved in ordinary field surveys, every one may be presumed to be sufficiently familiar to enable him on a slight consideration to perceive their insufficiency to determine correctly any considerable portion of the earth's surface, or of any long line of inland or sea-coast boundary. And whoever has reached this point will find no great difficulty in understanding the general principles on which the peculiar methods adapted to such extensive works are founded. In an ordinary survey, the surface of the earth is regarded as a plane, and every field is considered to be a part of this plane, bounded by horizontal lines.

Now as the earth is not plane upon its surface, but spherical, it is obvious that there is error even in the smallest survey executed according to the ordinary rules. And it is no less obvious that if two fields, side by side, be independently surveyed, the two planes supposed to represent them will not be mutually extensions of each other; but will be slightly inclined to each other, the angle of their inclination being equal to the amount of the earth's curvature between their middle points. In the case we have just supposed, indeed, this angle would be so very slight as to be altogether imperceptible: but should we compare two fields separated from each other by the distance of a hundred miles, we should find their inclination to be so great, that the plane of one of them extended in the direction of the other, instead of coïnciding with it, as it would do if the earth's general surface were itself a plane, would pass above it at a height of a mile and a quarter.

Again, in defining the boundaries of fields, it is necessary to refer them to certain fixed lines of direction, certain cardinal points of the horizon, or, as they are commonly called, points of the compass. Now if the earth were a plane, all the lines which we call north and south would be parallel to each other; and so far as the limited space comprehended within a field or a farm is concerned, such lines are actually sufficiently near to parallelism for every practical purpose. But since the earth is spherical, all such lines, wherever drawn, must intersect each other at last if extended to the poles; and they must consequently be more or less convergent in every other latitude. The extensive surveys of the public lands, therefore, executed by the government surveyors according to the ordinary methods, exhibit but a a loose approximation to correctness; and they have only been preserved from intolerable inaccuracy, by dividing the territory to be surveyed into zones limited by parallels of latitude at moderate distances from each other; and resting each successive zone upon a new base. To illustrate, by specification, the magnitude of the error involved in this mode of surveying, when pursued over long lines or extended surfaces, it may be observed that such a survey carried from the shore of the Gulf of Mexico to the northern boundary of the state of Mississippi, would be erroneous to the extent of four miles in every hundred.

But in a survey designed to represent the features of a coast with such exactness as to assure safety to the navigator who depends on the information it affords him, there must be no question of miles or even of fractions of miles of error; the rigorous demand is, that there shall be no sensible error at all. And therefore it is that the methods adopted must recognize, in the first instance, the fact that the earth is a sphere. And all the lines and surfaces involved in the various geometrical and trigonometrical operations, must be reduced to conform to this fundamental requisition.

But even this does not represent the entire complication of the task. The results which would be obtained by the strict application of the processes of spherical geometry and trigonometry to the globe of the earth

292

considered as perfect in figure, though immensely nearer to the truth than any that could be reached by plane trigonometry alone, would still fail to exhibit the points of the earth's surface as nature has presented them. For the earth after all is not a perfect sphere; but is larger in equatorial than in polar diameter by about twenty-six miles. It is this deviation from the truly globular shape which makes of the earth what is called an oblate spheroid; and this must still be allowed for, before a survey like that which we are considering can possess the accuracy that either science requires, or the safety of navigation demands.

To a survey of this kind is applied the term, *geodetic*. Having indicated the nature of the geometrical principles upon which its determinations rest, it may be proper to give a brief account of the instrumental methods which are employed in the field, in gathering the data for these determinations. The first step, which is to serve as the basis of all subsequent operations is, to measure with extreme accuracy, in a convenient and level spot, a base line of several miles in length. And when we speak of accuracy, it is to be observed that the word as here used is to be received in a much more severely rigorous sense than is the case in its ordinary applications. By the methods in practice in the American Coast Survey, a line ten miles long may be measured with no greater error than a fraction of an inch.

After this first very delicate but mainly mechanical process has been completed, the next thing to be done is to fix upon some prominently conspicuous and conveniently distant point, visible from both extremities of the base, and forming with them, by imaginary aërial lines, a triangle of large dimensions. All the angles of this triangle are then very carefully measured with instruments of the nicest accuracy; and from the values thus obtained and the known length of the measured base, the length of the unknown aërial sides is determined by trigonometrical computation.

Each of these unknown sides having become now known, may in its turn be made the base of a new aërial triangle; its extremities furnishing two of the angular points, and some new station still more distant, and falling conveniently in with the plan of the survey, supplying the third. Thus, by the continued repetition of the process here described, a chain of triangles is constructed step by step, which follows generally the windings of the coast, but extends also as far inland as may be necessary to obtain for the triangles the dimensions most favorable to accuracy. For it need hardly be remarked that, if there be minute errors committed in the instrumental parts of the work, as is doubtless unavoidable even when instruments possess the extremest delicacy which art in its highest refinements has been able to secure, these, though singly imperceptible, may grow by repetition and accumulation, until error actually sensible begins to vitiate the results. On this account, therefore, it is desirable that the instrumental measurements should be as few as possible: and accordingly,

293

in this principal chain of distances, the triangulation points are chosen as far from each other as the nature of the country will admit. It is a consequent necessity that the network of triangulation, in order that it may fulfil every important condition, should occupy a band of considerable breadth along the coast. Indeed some of the lines which form the sides of these aërial triangles, are not less than seventy miles in length: yet it is entirely demonstrable that the accumulated total of all the error with which they are vitiated, does not exceed a single foot.

As a check upon errors of this description, and as a means of testing the precision with which the instrumental and numerical processes have been conducted along an extended line of triangulation, new bases, called *bases of verification*, are occasionally measured, often some hundreds of miles distant from the original base; and the length as trigonometrically computed through the whole chain, is compared with that which is found by actual measurement. So close has, in many instances, been the agreement between results obtained by methods so widely different, as almost to exceed belief. A base of verification measured in France, in connection with the triangulation carried on through that kingdom for the determination of the length of a degree of the meridian, differed less than a foot from the value found for the same base, by computation through a chain of triangles, four hundred miles long. A similar base upwards of seven miles in length, measured on Salisbury Plain, in England, showed less than a single inch of disagreement with the result deduced by calculation from an original base at the distance of one hundred miles. The American Survey furnishes an example no less remarkable. A base five and a half miles long on an island in Chesapeake bay, as actually measured, and as determined through a triangulation of more than three hundred miles, presents results discordant to the extent of only four inches.

Next to the triangulation, in the logical order of proceeding, but practically simultaneously with it as far as convenience will allow, it becomes necessary to determine, with mathematical precision, the latitude and longitude of the principal points of the survey; and the angles which the lines composing the system form with the meridian. This is an essential prerequisite to the subsequent projection of the whole in its proper place on the general map of the globular terrestrial surface, of which the several partial maps form a series of detached though successive portions.

Topography.—The great primary triangulation having been established, the members of the system are afterwards subdivided into smaller triangles, called *secondary;* and these into others smaller still, called *tertiary*. By means of these, all the prominent points along the coast, and the principal features of its bays and harbors, are very accurately fixed. These form again points of departure, and checks to secure the accuracy of the final survey in detail, of the minute configuration of the coast-line, and of the characteristics of the land, embraced within the limits

of the work; including its superficial irregularities, its lithological character, the vegetable growth which covers it, and all natural objects or artificial constructions which are in any manner noteworthy, or which affect its visible appearance. These operations are accomplished by a species of mathematical drawing conducted in the field, with the aid of an instrument called the Plane Table; and constitute the *topographical* portion of the survey.

HYDROGRAPHY.—All the laborious processes thus far described are confined to the land. Without them, the examination of the subaqueous irregularities, or the *hydrographical survey*, important as is this part of the work to mariners, could not be carried out so as to be of any substantial value. For it is the business of this branch of the survey to furnish an accurate delineation of the surface which the water conceals; and the positions of the remarkable points of this surface cannot be correctly placed on the chart, nor can the chart enable the navigator to recognize them, when he finds himself in their neighborhood, unless they are correctly determined in distance and direction from the objects visible on shore or above the water. The points, therefore, trigonometrically determined on the land, are used to fix the positions of sounding vessels, which are employed to ascertain the depth of the water and the nature of the bottom—the positions selected being so much the less distant from each other as the irregularities detected are greater, the shoals more dangerous, the submarine deposits more varied, and the seas under examination more frequented.

Observations upon the tides and currents, on the variation of the compass, and on the effects of winds upon the level of the water, furnish the remainder of the data necessary to complete the information which is to be presented on the chart—necessary, in other words, to form a graphic representation, which shall exhibit with minute accuracy the latitude and longitude of every remarkable point of the shore-line, and of every promontory, hill, mountain, or other object which, when the land is in view, can aid the mariner in identifying his position: which shall show, also, the situations and windings of channels; indicate the localities of hidden rocks and shoals; give the depth of the water, and the character of the bottom, everywhere within the limits which can be reached in ordinary soundings; and, finally, furnish all the information in relation to tides and currents, light-houses, beacons, fog-bells, buoys and sailing lines, which is necessary to render navigation secure.

Such being the objects aimed at, and such the processes employed in conducting the difficult work of a Coast Survey, it seems proper, before proceeding to inquire how far these objects have been successfully pursued, or these processes skilfully and faithfully applied in the prosecution of the survey of our own coast, to review, in brief, the history of similar undertakings in other countries. To this topic, therefore, the committee propose to direct their next attention.

295

ACTION OF OTHER GOVERNMENTS IN REGARD TO SUCH SURVEYS.

The national importance of works such as we are considering has for a long time been fully recognized by the governments of Europe. The French, who were the first to apply the principle of triangulation to the admeasurement of an arc of the meridian, with a view to determine the curvature and figure of the earth, were the first also to frame a territorial map upon the basis of geodetic surveys. The want of accuracy, however, in some of the elemental proceedings upon which this well-known map was founded, and the comparative meagreness of its details, gave rise to a scientific organization, inaugurated some fifty years ago under the auspices of La Place, for the purpose of its review and reconstruction. From that time to the present, the new geodetic survey of the kingdom, republic and empire has been steadily advancing; and, at the date of this report, about four-fifths of the work, embracing maps of some one hundred and seventy thousand square miles, may be regarded as nearly completed. The hydrography of the coast is finished. The cost of these magnificent contributions to the political importance and domestic interests of France cannot be estimated definitely; for the departments to which they have been confided have had other duties in charge; but the annual expenditure has been estimated at a little less than three hundred thousand dollars. The charts for general use are on a scale of rather more than three-quarters of an inch to the mile; some of them, intended to direct in the construction of public works, are on a scale four times larger.

The trigonometrical survey of England proper was begun in 1791, and will be finished in a few years more. A million of pounds sterling has been expended in its prosecution. The surveys have been made on a scale of two inches to the mile, with the exception of the six northern counties, where the scale was increased to six inches to the mile. The published charts are on a scale of one inch to the mile, and 108 sheets will cover the whole area of England and Wales.

The surveys of Scotland and Ireland are independent of that of England. They were begun later, and have advanced more rapidly; but they have been pursued into greater minuteness of detail, and have involved a greater rate of expenditure. In one of the documents laid before Parliament a few years ago (1851), the surveys of the three kingdoms were estimated to require, for completion, the sum of four millions one hundred and thirty-three thousand pounds sterling—a sum equal to more than twenty millions of dollars.

The Austrian Government has been, for some eighteen years, engaged in a survey of its dominions, at an annual cost of half a million of dollars. The Russian, the Prussian, the Swedish and Norwegian, the Sardinian, the Belgian and the Spanish Governments—indeed, all the governments of

Europe, without a noticeable exception—have actively occupied themselves with the topography of their respective territories. A summary view of their labors, so far as definitely ascertainable at the latest dates, is exhibited in the following tabular arrangement:

Territory surveyed.	Scale of Maps.	Sheets finished.	Sheets incomplete.
England,	1: 63,360	100	8
France,	1: 80,000	172	77
Belgium,	1: 20,000	completed.	
Netherlands,	1: 50,000	12	50
Hanover,	1:100,000	62	0
West Prussia,	1: 60,000	59	0
East Prussia,	1:100,000	190	56
Upper Prussia,	1:150,000	23	0
Hesse,	1: 50,000	36	0
Wurtemberg,	1: 50,000	56	0
Baden,	1: 50,000	56	0
Switzerland,	1:100,000	10	6
Bavaria,	1: 50,000	90	6
Tyrol,	1:144,000	23	0
Sardinia,	1: 86,000	41	0
Parma and Roman States,	1: 86,000	8	0
Illyria and Styria,	1:144,000	37	0
Austria,	1:144,000	37	0
Bohemia,	1:144,000	23	14
Saxony,	1: 57,000	14	3
Silesia,	1:144,000	23	35
Gallicia,	1:150,000	23	0*

Besides these, which, as the table shows, have produced more than eleven hundred sheets of finished map-work, there are the completed survey of Greece, and the surveys of Sweden, Denmark, Norway, Spain, and other countries, yet in progress.

In the course of these works, under the guidance of the ablest astronomers of their time, — La Place, Arago, Struve, Bessel, Schumacher, Gauss, Carlini, and their compeers,—the entire surface of Europe has been traversed, and a series of great arcs has been measured, extending together over nearly forty degrees. The chains of triangulation, which were constructed in the geodesy of each country, have been connected into one harmonious system; and it is not too much to say, that, in a very few years, every town and hamlet, and isolated villa—every mountain and hill, and lake and battle-field—will have its place assigned it, with mathematical precision, upon the general map of the European continent.

The hydrography of the coasts has been the object of equal care. Admiral Beechy, in his address before the Royal Geographical Society, in 1856, speaking of the hydrographic surveys of the north of Europe, which had been conducted by Russia, Prussia, Sweden and Denmark, says: "No fleet ever left England so well supplied with charts as the Baltic fleet of the last war."

The survey of the East India Company's possessions, under Colonel

Lambton and Lieutenant-Colonel Everest, is distinguished among the geodetic achievements of the time, no less by its magnitude than by the skill and energy with which it has been prosecuted. It has measured, by great triangulations, a meridian arc of twenty degrees and twenty-one minutes, or of about fifteen hundred miles in length. Up to the present time, it has delineated four hundred and forty-seven thousand square miles of territory, being about one-third the whole area of India.

The hydrographic operations of the Company have embraced a part of the eastern coast of Africa, the Red sea, the Persian gulf, the Arabian sea, the Bay of Bengal, and the China sea. The charts, one hundred and forty-five in number, include the trace of a series of *reconnaissances* of all the shores, from the most eastern cape of Africa to China.

It would be out of place, in this very general review, to pursue into greater detail the history of these numerous and extensive and interesting foreign works; or to enumerate specifically the various and important benefits which they have been the means of bestowing upon mankind. If the committee have succeeded in showing that the governments of the civilized world have generally favored public works of the kind under consideration, their object will have been attained. But they believe that they have done more than this. They believe that enough has been said to make it manifest that all enlightened governments have vied with each other in the liberality, the zeal, and the perseverance with which they have prosecuted their several surveys; and have displayed, in the spirit which has sustained them, a most laudable ambition to secure for their results the severest scientific accuracy.

FIRST ORGANIZATION OF THE COAST SURVEY OF THE UNITED STATES.

It is believed that the honor of first suggesting a geodetic survey of the American coast, is due to the elder Professor Patterson, of Philadelphia; who, as early as the year 1806, availed himself of his intimacy with the President, Mr. Jefferson, and the gentlemen who formed his cabinet, to impress them with the feasibility and policy of the measure. The act of Congress of 1807 was passed upon the executive recommendation. It authorized the President to cause a survey to be made of the coasts of the United States; in which were to be designated the islands, shoals and places of anchorage within twenty leagues of the shore, with the courses and distances of capes and headlands, and such other matter as might be deemed proper for completing an accurate chart of every part of the coast. It also authorized the survey of St. George's bank, and any other banks or shoals, and the soundings and currents beyond the limits aforesaid to the Gulf-stream.

A circular was accordingly issued by Mr. Gallatin, the able statesman then at the head of the Treasury Department, setting forth a project of a

298

survey, and inviting to it the attention of scientific men. In this project, the proposed operations were distributed under three heads:

1. The ascertainment, by a series of astronomical operations, of the true positions of a few remarkable points on the coast.

2. A trigonometrical survey of the coast between these points.

3. A nautical survey of the shoals and soundings of the coast, of which the trigonometrical survey was to supply the basis.

Among the gentlemen who replied to the Secretary's circular, was the late Mr. F. R. HASSLER. This gentleman had, previously to this time, been engaged in the triangulation of the Swiss canton of Berne; and he proposed to place at the service of our government the ability and experience which he had acquired in the school of practice, for the execution of the American survey.

Mr. Hassler was accordingly appointed; and in the year 1811 he visited Europe for the purpose of obtaining the instruments necessary for his operations, all of which had to be specially constructed; but owing to the disturbed state of the continent, and the subsequent war between England and the United States, his efforts to obtain them were for a long time baffled. He did not return to the United States until the year 1816; and it was not until some time in the year following that a commencement of the work was at length made in the bay and harbor of New York. But the work had been hardly begun, before it was suspended in consequence of the failure of Congress to provide funds for its continuance; and in 1818 the law under which the Superintendent had been appointed, was repealed.

From 1819 till 1832 attempts were from time to time made to survey portions of the coast under the direction of the Navy Department. Detached surveys of rivers and harbors were made; and hydrographic reconnaissances of the coast of some of the States; but no general or connected survey of the coast was attempted, nor did the detached surveys yield fruit which, taken as a whole, could be considered creditable to the navy or to the country. The Hon. S. L. Southard, Secretary of the Navy in 1828, in a reply to resolutions of inquiry from the Committee on Naval Affairs, in the House of Representatives, characterized the charts produced by those surveys as expensive and unsafe, pointed out the inefficiency of such a desultory plan of operations, and recommended a recurrence to the law of 1807.

On the repeated representations of Mr. Southard and others, the project of a geodetic survey of the coast conciliated again the favor of Congrsss in 1832. A small appropriation was then made for carrying out the law of 1807, and the President was authorized to employ in the conduct of the work, such astronomers and other persons as he should judge proper, in addition to officers in the land and naval service. From this time the operations of the Coast Survey passed anew under the charge of Mr.

Hassler; and he continued to direct them till his death, which occurred in the year 1843.

In reviewing the history of this early period, it is proper to remember that "the first years were necessarily years of organization and instruction. The Superintendent had to systematize methods, to train up assistants, to cause the work to grow from a small beginning, until it comprehended the various operations of a geodetic survey upon the land, and included the hydrography of the adjacent waters. When the results accumulated, it was necessary to provide for their computation and reduction; and also for the preparation of maps and charts upon a plan suited to our extended coast, and for the engraving of the maps themselves. All these things were new in this country. The amount of knowledge, skill and labor required to overcome these and other difficulties was hardly appreciated. The results show how large an amount of work had been done, and how the work was extending beneficially at the time of Mr. Hassler's death."

The condition of the work as Mr. Hassler left it, will be made intelligible by the following brief statement. A base line had been measured on the south side of Long Island, in the vicinity of New York, the commercial importance of which obviously indicated it as the proper point of beginning. The triangulation had extended eastward to Rhode Island, and southward to the head of Chesapeake bay; the primary triangulation crossing the neck of New Jersey and Delaware, while a secondary triangulation skirted the coast of New Jersey, meeting and inosculating with another series which extended down Delaware bay. The topography had kept pace with the triangulation; and the hydrography of New York bay and harbor, of Long Island sound, of Delaware bay and river, and the off-shore work, from Montauk Point to the capes of the Delaware, were nearly completed.

A reference to the table of statistics in the second part of this report will show that the triangulation covered an area of 9,000 square miles, furnishing determinations of nearly 1,200 stations, for the delineation of 1,600 miles of shore-line; that 168 topographical maps had been surveyed, and 142 hydrographical charts. The work of publication had been organized, and five large charts were engraved, very nearly ready for publication.

The progress thus sketched, although really very considerable, and highly creditable to the late Superintendent, was still felt to be inadequate to the pressing demands of commerce, and clamors arose in Congress against the administration of the Survey, ascribing the slow progress to an unnecessary refinement in the processes employed, and claiming the results to be inadequate to the expenditure. An investigation was accordingly instituted in 1842, by a congressional committee, which, after a severe and unfriendly scrutiny, practically resulted in a complete endorsement of the principles on which the Survey had been conducted by Mr. Hassler. A proviso was attached to the Appropriation Bill in 1843, directing that the

Survey be thereafter executed according to a plan of reorganization to be prepared by a board of officers, consisting of the (late) Superintendent, his two principal assistants, the two naval officers in charge of the hydrographical parties, and four officers of the corps of topographical engineers.

The plan adopted by this board in 1843, and invested with the force of law by the preceding legislation, reaffirms the scientific methods proposed by Mr. Hassler as the basis of the work, and provides for the organization of its operations.

EXPANSION AND MODIFICATIONS OF THE COAST SURVEY UNDER THE PRESENT SUPERINTENDENT.

In consequence of the death of Mr. Hassler, which occurred soon afterwards, the responsibility of amplifying and carrying into effect the provisions of the adopted plan devolved mainly upon his successor, the present Superintendent, ALEXANDER DALLAS BACHE. The appointment of this gentleman was a concession to the universally expressed scientific judgment of the country. It is within the personal knowledge of some members of this committee, that our colleges, learned societies, and men of science, united in one strenuous call upon the executive, to withdraw Professor Bache from the field of more limited usefulness in which he was already distinguished, and to secure to the entire nation the benefit of his great talents and his services. And it is matter of just pride to them, that their elevated estimate of his merits has been so abundantly vindicated by the brilliancy of his official career.

Up to this time, it will be observed, the Survey had been confined entirely to the Atlantic coast, and to the limited portion of that coast embraced between Narraganset bay and Cape Henlopen. No sooner had the new Superintendent been able to form some just estimate of the magnitude of the work in hand, and of the great length of time which it must require for its completion, at its actual rate of progress, and with the existing provision for its prosecution, than he urgently recommended the adoption of a more comprehensive system, according to which the work should be commenced, and carried on independently, in many places at once; each section employing its own base, and making its own geographical determinations; but all designed to form, when completed, a single continuous and unbroken chain of triangulation extending from one end of the coast to the other. At that time Texas had not been annexed, and the western coast was not in the possession of the United States. The proposition of Professor Bache, reduced to a specific form, was to divide the entire coast of the Atlantic and the Gulf of Mexico, into eight distinct sections,* embracing as nearly as could be estimated, the same length of shore-line in

* Since the acquisition of Texas and the extension of the work to the Pacific coast, the number of sections has been increased to eleven.

each; and to commence the work in as many of these simultaneously, as Congress could be induced to provide for.

This recommendation was made at the close of the year 1844, and was immediately approved. Accordingly, in the course of the following year, the Superintendent, besides extending the line of Mr. Hassler at both ends, commenced active operations on the coast of Virginia and North Carolina upon the Atlantic, and upon the coast of Alabama and Mississippi in the Gulf of Mexico. Two years later the work had been extended to the States of South Carolina, Georgia, Louisiana and Texas; and two years later still the important survey of the reefs and keys of Florida was commenced.

On the annexation of California, the Pacific coast was immediately included in the plan of operations; and such was the vigor with which the work was pushed forward in every quarter, that Mr. CORWIN, then Secretary of the Treasury, in a report communicated to the Senate in 1851, was enabled to show, that a twofold increase of appropriations to the work had produced an increase in the amount of performance, and in the aggregate of the results obtained, more than threefold. And he traced this economy to the division of labor which an increased scale permits, and to the vigorous prosecution of the work at the south and at the north at the same time, whereby the same persons can avail themselves of the best season for operating in the field in each region. The Secretary, at the same time, advised strongly against the reduction of the appropriations, in the diminution of the force employed on the Survey; maintaining that such retrenchments could be made only at a large economical sacrifice.

With this brief statement of the general administrative principles, according to which the present Superintendent has aimed to conduct the operations of the important work confided to him, the committee proceed to consider, in more specific detail, some of the particular methods pursued in its execution, with special notice of those in which an advance has been made upon methods heretofore used in this or similar works, passing afterwards to a review of the results obtained up to the present time.

DETAILS OF COAST SURVEY OPERATIONS UP TO 1858.

Under this head, the committee desire to acknowledge their obligations to the obliging assistants in the office of the Coast Survey at Washington, for information courteously rendered in regard to such matters of history and methods of practice as are not fully embraced in the published reports, and to which the personal knowledge of the members of the committee could not be presumed to extend.

MEASUREMENTS OF BASES.—There have been measured in all, up to the date of the present report, nine principal base-lines, two of which are now connected by a primary triangulation. These two are the Fire Island base, on

the south side of Long Island, and the Kent Island base, in Chesapeake bay. Both of these, and also a third one in Massachusetts, were measured with the apparatus designed by Mr. Hassler, and fully described by him in the Transactions of the American Philosophical Society, vol. IV.; the measurements being made with iron bars, and by optical contact. Four bars, each two metres in length, were clamped together endwise, forming a combined length of eight metres, and placed in a wooden box suitably stiffened, the ends of the bars projecting a little beyond the box. A powerful microscope, mounted on a suitable stand, was adjusted so as to bring its cross-wires to point at the forward end of the bars, which was defined by the dividing line formed by an abutting piece clamped against it. The box was then carried forward and adjusted in position so as to bring the rear end under the same microscope; another was adjusted over the forward end, and the measurement continued in this way. The temperature of the bars was ascertained, as nearly as may be done by such means, by thermometers placed in contact with the bars. It will be observed that the correction for temperature is a very sensible quantity in a long line; supposing the temperature at which the standard has its determinate length to be 32° Fahr., as is the case with the metre, and the measurement to have been made at an average temperature of 72°, the nominal length of a line of 10 miles would be 4.5 metres, or nearly 15 feet less than the true length expressed in the standard measure. It is highly important, therefore, that the temperature of the bars during the measurement should be accurately ascertained, or else, that the expansion should be *compensated*, as in the case of a compensation-pendulum. A mercurial thermometer of ordinary form will follow changes of temperature far more quickly than an iron bar of some thickness, owing to the great *specific heat* of the latter; while the temperature is rising the thermometer will show a higher, and while it is falling a lower temperature than the iron bar will have acquired at the same time, and the measurement is liable to errors arising from this source, unless the errors in both directions are accidentally balanced in the aggregate.

To obviate this source of error, Professor Bache designed an apparatus, which was constructed in the office of the Coast Survey, under his direction, and with which the subsequent bases have been measured. In this apparatus the measuring bars are arranged upon the plan of compensation for the effects of temperature, which was first used by Colonel Colby in Great Britain, and afterwards in this country by Mr. Borden, in the Trigonometrical Survey of the State of Massachusetts; but the mode of obtaining the compensation is entirely different. A principle is also introduced, which, though of sufficiently obvious importance when once suggested, had not been previously recognized; or had not, at least, been previously applied in practice. It is matter of observation that if a bar of brass and a bar of iron of equal dimensions be exposed to the same source of heat, they will not always undergo equal changes of temperature in equal times; but

that, after a short interval, a difference will be found to exist, the amount of which will depend on the different conducting properties of the two metals, their different specific heats, and the different powers of absorption possessed by their surfaces. Accordingly, two such bars, if of equal cross-sections, will not form a system compensating during progressive changes of temperature, however perfectly the compensation may be ultimately effected, when the temperature shall have become stationary, and uniform throughout the system. In order therefore that a combination of such bars may answer the purpose aimed at, their sections must be so proportioned to their conducting power and specific heat, that their fluctuations of temperature under different exposures may go on at precisely the same rates. As to the absorbing power of their surfaces, that is easily made identical, by giving to both bars the same external coating.

The lever of contact and level, first used in the adjustment of standard measures by BESSEL, has been adapted to this apparatus, the contact between two sets of bars being made by a blunt knife-edge against a plane, both of agate. Those who desire to study this beautiful and delicate arrangement are referred to the Coast Survey Report for 1854, where it is described and figured. The mechanical arrangements by means of which the bars are adjusted in line, height and inclination, are also worthy of admiration; and such is the rapidity with which the apparatus can be used, that on favorable ground a mile has repeatedly been measured in a single working day of ten hours. It is so arranged that the measurement may be made at inclinations up to 3° with the same facility and accuracy as on level ground.

The accuracy of its results has been practically tested by repeated measurements of the same distance, from which it appears that the probable error in measuring a mile is about two hundreths of an inch. This base apparatus was designed in 1845, and first used in 1847 on Dauphine Island, on the coast of Alabama. Since then base-lines have been measured with it in North and South Carolina, in Florida, and in Maine. All these measurements have been conducted by the Superintendent in person, aided by some of his assistants. The average length of the primary base-lines measured thus far is about six miles.

Many laborious and delicate experiments were requisite to perfect the adjustments of the apparatus. Before and after the measurement of each base-line, the length of both sets of bars, which is six metres or nearly twenty feet, is carefully compared with a standard bar of iron. The rate of expansion of this standard has been ascertained by experiment, and its length at 32° Fahr. has been verified by means of six single metres abutting endwise, each of which has been compared with an authentic standard metre—one of those originally made by the French committee on weights and measures. The possession of this valuable standard, which was brought to this country by Mr. Hassler, and by him presented to the American

Philosophical Society, was one of the chief reasons for using the *metre* as the unit of length in the Coast Survey, especially in the absence of any legally established standard of the country. The length of the English yard, which is our customary unit of length, has but recently been definitively settled in Great Britain; and the fact that the dimensions of the earth have hitherto been best known in metres,* makes the latter measure one of great convenience in geodetic operations. The distances in the Survey are, of course, also given in yards, and miles, for common use.

The comparisons of length are made by means of Saxton's *pyrometer*, an instrument of great simplicity, and affording the highest degree of accuracy. A small mirror, movable about a vertical axis, reflects into the field of a telescope, placed at a distance of 20 feet, the divisions of a long curved scale fixed directly under the telescope; by means of a small abutting piece attached to the mirror, any difference in length to be measured causes a corresponding rotation of the mirror, by which different scale-divisions appear on the wires in the telescope, and a greatly magnified indication is thus obtained by an index equal in length to twice the distance of the mirror from the scale. The quantity to be measured is thus readily magnified 2,000 times, without any loss from inertia and flexure, which would be unavoidable in obtaining a similar result by means of mechanical levers.

The necessity for the greatest attainable accuracy in such operations is apparent when we remember, that an error in the base-line will affect the whole distance depending upon it by triangulation in the same ratio: thus, if the base-line were in error by but its ten-thousandth part, a distance of 100 miles depending on it would be in error, from that source alone, by one hundreth of a mile or 53 feet.

The Fire Island base, on the south side of Long Island, and the Kent Island base in Chesapeake bay, are connected by a primary triangulation. These are the bases alluded to in a former part of this report, where it is mentioned that the Kent Island base has served to verify the others. This Kent Island base is five miles and four-tenths long, and the original Fire Island base is eight miles and seven-tenths. The shortest distance between them is two hundred and eight miles; but the distance through the triangulation is three hundred and twenty. The number of intervening triangles is thirty-two; yet the computed and measured lengths of the Kent Island base exhibit a discrepancy no greater than four inches.

On some portions of the coast, where the pressing wants of commerce made it desirable to commence the work in advance of the regular primary triangulation, local surveys have been executed based on preliminary base-lines, which were measured with wooden or iron bars, and some simple auxiliary apparatus, generally devised by the assistants having immediate

* Or rather in terms of the *toise*, of which the metre is a certain aliquot part.

charge of the work. Some of these contrivances have been described in the annual reports of the Superintendent, and will be found very useful to persons wishing to execute local surveys with some degree of accuracy. See particularly C. S. Report, 1857. All such preliminary measurements will in time be superseded by measurements with the compensating apparatus above described.

MEASUREMENT OF ANGLES.—In measuring the angles of the primary triangulation, theodolites of various sizes and construction are employed. The largest instrument of this class belonging to the Coast Survey has a circle of 30 inches in diameter, graduated to five minutes, and reading to single seconds of arc on three micrometer-microscopes; it is provided with a telescope of great power, which is partly supported by springs within the upright columns, so as to relieve the bearings in a great degree from friction. The weight of the whole upper or movable portion is in great part supported by friction rollers and taken off from the vertical axis, in order to secure the latter against wear and to obtain a very free motion about the axis. This instrument was designed by Mr. Hassler, and constructed by Troughton & Simms, of London. It is used by the Superintendent in the execution of the primary triangulation of the north-eastern part of the coast, where the country presents considerable natural elevations and admits of long lines of sight, ranging from twenty to eighty miles in length. The accuracy of pointing and reading attained with this instrument is such, that, notwithstanding the varying condition of the atmosphere, the probable error of a single measure of an angle is about one second and a quarter, which in the mean of thirty such measures, the usual number taken, is reduced to about one-fourth of a second. The observations are made under all conditions of visibility of signals, varying from a well-defined and steady image, to a nearly obliterated, trembling blur. For each observation, the appearance of the signal observed has been carefully noted; and the means have been thus obtained for a discussion of the results with reference to the conditions of vision. The results arrived at justify the conclusion that the mean of observations taken in various states of the atmosphere, is probably preferable to the mean of such as have been obtained under circumstances apparently the most favorable; there being in the former case less of correction required to fulfil the geometrical conditions of the work; while a given limit of probable error can generally be reached by that method, in much less time than by the other. This result may be readily accounted for, by supposing that, under the conditions which appear most favorable to accuracy of observation along a line of considerable extent, there may regularly occur a slight lateral deflection, which, in the mean of observations taken under different conditions of the atmosphere, is sensibly eliminated.

A theodolite nearly similar in construction with the one described, but having only twenty-four inches diameter, is likewise used in the primary triangulation. Besides these, *repeating theodolites* with circles varying

from twelve to six inches are employed in the different classes of triangulation. On the Atlantic coast south of New York, and on the shores of the Gulf of Mexico, where the country presents no considerable eminences, and is in general densely wooded, the instruments frequently require to be elevated on wooden structures, in order to overcome the curvature of the earth, and to get above the most heated statum of air. These structures, which range from twenty-five to fifty feet in height, have been constructed on various plans by the assistants of Professor Bache, and have proved amply steady for measurements with the repeating instruments.

The signals generally employed to mark station-points are straight poles, supported by a tripod, and surmounted by a cone or bell-shaped cap of bright tin, on which the reflection of the sun shows a luminous spot to the observer. On the long lines of the primary triangulation, however, *heliotropes* are used in addition to the signal-poles. The heliotrope, invented by Gauss, is an instrument in which a mirror of a few square inches surface is so mounted in connexion with a telescope, that the reflection of the sun may be thrown to any desired direction. It is very effective, and it is not unusual to observe on heliotropes on the summit of mountains 80 or 90 miles distant, when the outlines of the mountains are invisible through the hazy atmosphere.

The number of observations taken for the different classes of triangulation is so apportioned to the quality of the instruments used, and to the agreement of the individual observations among themselves, that the error of the sum of the angles in a primary triangle will not exceed three seconds, or nine seconds in a triangle of the second order. These limits of error, however, are seldom reached in fact. The average correction required for an observed angle in the eastern section, where the stations are natural elevations and the sides average over forty miles in length, is about four-tenths of a second. In the southern sections it is rather larger.

Observations of Latitude.—In order to fix the situation of the whole network of triangles on the surface of the earth, it would suffice to determine the latitude and longitude of some one point, and the direction with reference to the true meridian of one of its lines—its azimuth—if the figure of the earth were precisely known. But owing to the irregularities of the latter, it is found necessary to repeat those determinations very frequently, by which means the work is checked, and any accumulation of error avoided, while at the same time the figure of that portion of the earth covered by the survey is accurately ascertained. Observations of latitude are made at numerous stations of the primary triangulation. Different methods and different instruments have been employed, and the results have been carefully discussed in order to determine which are best and most available. A two foot vertical circle, and several twelve-inch repeating reflecting circles, by Troughton & Simms; and also six-inch and ten-inch repeating theodolites by Gambey, were tried successively, but the results

were found to be liable to considerable instrumental errors, and the degree of their accuracy proved to be insufficient to repay the labor which had been bestowed upon them. Finding a larger class of instruments to be indispensable, Mr. Bache had recourse to the prime vertical transit, the zenith telescope or equal altitude instrument, and the zenith sector; each provided with a telescope of forty-five inches focal length.

The method of determining latitude by observations of transits of stars over the prime vertical, first used by Bessel, is admirable in theory, but in practice a great loss of time and labor is often occasioned by clouds, which interfere with obtaining corresponding sets of eastern and western transits; and for operations in the field this method is found to present less advantages than others.

The *zenith telescope*, or equal altitude instrument, was first applied to the determination of latitude by Capt. A. Talcott, late an officer in the United States army, and has been remodeled and specially adapted to the purpose in the Coast Survey, where it has become the favorite instrument on account of the great number and accuracy of the results that can be obtained in a given time, and the facility with which it is used. It is employed in determining latitudes by measuring, with an attached micrometer, the differences of zenith distance of stars culminating within a short time of each other, at nearly the same altitude, on opposite sides of the zenith. From the star catalogue of the British Association may be selected any desirable number of pairs of stars having the required relative positions. If, after pointing the micrometer wire in the telescope to a star at its meridian passage south of the zenith, and revolving the instrument about its vertical axis, the telescope remaining at a fixed inclination, we find that a star culminating north of the zenith passes precisely on the same wire, we infer that the zenith is exactly midway between the two stars, and consequently that its distance from the celestial equator, or the latitude of the place, is equal to the *mean* or half sum of the declinations of the two stars observed. If, furthermore, the second star does not pass precisely on the wire, but still in the field of the telescope, we are able to measure the difference of zenith distance by means of the micrometer, and correct by half that amount the half sum of the declinations. By means of a delicate level attached to the instrument we keep account of its deviation from the true vertical. The whole observation thus consists of pointing and reading the micrometer, and noting the level, in each position of the instrument.

This method possesses also the great advantage that the result is nearly free from the effects of refraction, which enters only so far as the difference of zenith distance is affected by it; the correction for refraction never exceeds a quarter of a second.

The observations with the zenith telescope being considerably more accurate than the positions of the stars in the British Association's catalogue, it has been preferred rather to increase the number of pairs employed, than to

multiply observations on the same pairs. In practice, from twenty-five to forty pairs of stars are observed, at a station; with from four to six observations on each pair, on different nights. The probable error of a single observation with the zenith telescopes used in the Coast Survey is from three to five-tenths of a second; while the probable error of the catalogue places considerably exceeds one second. The Greenwich observations, and other recent catalogues, frequently supply better places than the larger catalogue just referred to; and thus contribute to improve the result.

Prof. Bache has at various times communicated to the American Association notes on the use of the instrument in question, and at the Baltimore meeting read a paper showing the remarkable result that when at a station the same stars are observed by the same observers with different zenith telescopes, and by different observers with the same instrument, results almost identical were obtained; setting at rest the question of any residual personal or instrumental errors. It may safely be predicted that this simple and effective instrument is destined to supersede all others for the determination of latitudes in the field, and it is proper here to state that the recent assertion of Mr. Porro, a French engineer, that the method used in America is merely Gauss' method of equal altitudes, is founded on an entire misconception of the method and instrument as used in this country.

The *zenith sector* of the Coast Survey is constructed on the plan designed by Mr. Airy, the Astronomer Royal of England, and is similar to the one recently used in the British Ordnance Survey, but possessing some improvements in the details suggested by the use of the latter. It is an admirable instrument, perfect in design, and in point of accuracy compares well with a zenith telescope of equal power: but its ponderousness and the greater labor attendant on its use make it less eligible for observation in the field. Its capabilities, however, are much greater than those of the zenith telescope, inasmuch as it measures absolute zenith distances. It has been used with great success at six of the principal stations of the survey, and will be found described and figured in one of the forthcoming volumes of the Coast Survey Records and Results.

Irregularities of the Earth's Figure.—When the latitudes observed at different stations are referred to one another, by means of geodetic differences of latitude, there are discovered certain discrepancies, much larger than could result from the probable residual errors of observation—discrepancies, therefore, which can only be ascribed to local irregularities in the figure and density of the earth, and which have been called *station errors*. They are similar to those which are caused by the proximity of mountains; but they occur where the external configuration of the earth's crust would not indicate the probability of their existence. Prof. Bache recognized this source of error as early as the year 1844; and as a consequence, he determined to carry a continuous series of astronomical stations through the pri-

mary triangulation, in order to arrive as nearly as possible at the true figure of the portion of the earth's surface on which he was engaged.

The elements of the figure of the earth used in these comparisons are those obtained by Bessel in his last discussion of the results of ten measures of arcs. It is an interesting fact, which it is here in place to mention, that the observed difference of latitude of the extremities of the arc at present comprehended under the connected triangulation of the American Coast Survey, agrees very closely with the geodetic difference as computed from Bessel's elements. This arc extends from Maine to Maryland, over about five degrees of latitude and six and a half of longitude; in intermediate portions of its length, the deviation from the mean ellipsoid reaches three seconds of arc and over. The laws which govern these irregularities are still the subject of investigation. In the eastern portion of the survey, where the earth's crust has been more disturbed, the average amount of station error is between one and two seconds of arc; but it amounts to only about half a second in the sections south of the Delaware, where the diluvium rests apparently undisturbed.

Observations of Azimuth.—Observations of azimuth are made at all the latitude stations. The instruments used are the same as those employed in the measurement of the angles in the primary triangulation. The meridian is determined by observations made on the pole star or other close circumpolar stars, principally when the object is near its greatest elongations. The motion of the star is in azimuth, at these points of its revolution, being almost imperceptible, the result will be practically independent of the time. Moreover, if observations be taken within forty-five minutes on either side of the elongation, they can be reduced to that position by a most simple formula. The pole-star, however, even at its culminations, moves so slowly in azimuth, that the liability to error in pointing is found to be no greater at those periods than at the elongations; and Mr. Bache has finally pursued sometimes the plan of observing the star at equal intervals on both sides of the meridian before and after the culmination. When this method is employed, the reduction is simplified into a mere taking of means: and it may here be noticed, that in these as in all analogous processes, it has been the aim of the Superintendent so to arrange the methods of observing, as to diminish as far as practicable the labor and liability to error of the computations. The azimuths are liable to irregularities similar to those which have been described as affecting the latitudes: and a comparison of azimuths observed at different stations, extreme and intermediate, has manifested the existence of station errors among them, which can only, like the former, be referred to local variations of level. (i.e. the plumb line, as indicated by the levels)

Observations of Time and Longitude.—Observations of local time are made in connection with those of latitude and azimuth: the instruments employed being generally portable transit instruments of from twenty-six to

forty-eight inches focal length, constructed by Simms of London and Wurdemann of Washington. For time-keepers, chronometers by the best makers are used, except for telegraphic determinations of longitude, when astronomical clocks are employed.

In the plan of reörganization of the survey, in 1843, it was "urged, and deemed essentially necessary, that the difference of longitude between some main points of the survey, and the meridian of any or all of the European observatories, be ascertained immediately." In order to carry into effect this important injunction, Prof. Bache has availed himself of every means science could afford. All the observations obtainable of eclipses, occultations and moon culminations made in this country previously to 1844, together with the simultaneous observations made abroad, so far as they could be found, have been collected and reduced: and similar observations have since been continued at Cambridge, Philadelphia, Washington, Charleston and Cincinnati. All these stations being connected by the electric telegraph, their differences of longitude have been determined with great accuracy; and all the results are referred to Cambridge as a common station of reference.

The difference of longitude between Cambridge and Liverpool has also been determined by means of large numbers of chronometers carried repeatedly between the two stations on the Cunard steamships. These chronometric expeditions, in the words of Mr. W. C. Bond, director of the Harvard University Observatory, "for the magnitude and completeness of their equipments, have not been equalled by any of the similar undertakings of European governments. Even the 'Expedition chronometrique' of Struve was on a scale much less extensive." The voyages were continued through a number of successive years. The first great special expedition took place in 1849, and the most recent in 1855. In the latter the effect of temperature on the rate of the chronometers formed a subject of special investigation. For each instrument the effect of temperature on its rate was ascertained by experiment, and the average temperature during each trip was kept account of by means of a thermometric chronometer, constructed like the others, but with undivided balance, so that its daily rate was affected by six seconds for a change in temperature of 1° Fahr. Fifty-two chronometers were employed in this expedition, and were transported six times between Cambridge and Liverpool; giving nearly 300 individual longitude determinations, with a probable error of the mean result of two-tenths of a second of time. Yet this result differs by more than a second of time from that of the expedition of preceding years, giving $4^h\ 44^m\ 31^s.8$ for the longitude between Greenwich and Cambridge, while the former expeditions had given $30^s.6$. The results by the astronomical methods also differ, eclipses and occultations giving $29^s.5$, and moon-culminations $28^s.5$. The results by the latter method are doubtless liable to large constant errors. Indeed, each method appears to be affected by sources of constant error which no accumulation of results

will eliminate, and a greater approach to the truth must be sought by multiplying methods as far as practicable.

It is to be hoped that a submarine telegraph will ere long afford another, and perhaps very accurate method of verifying those results, and determining the longitude within the narrowest limits of error.

The differences of longitude between Cambridge and the principal stations of the survey in other sections are determined by the aid of the electric telegraph, wherever this has been established. In this method, which is by far the most accurate for determining difference of longitude, the Coast Survey has taken the lead, and has brought it to a great state of perfection, which subsequent operations of a similar nature executed in Europe have not yet reached. The idea of comparing the local time of different places by means of the electric telegraph is sufficiently obvious, and dates from the conception of the telegraph itself; but the refined methods by which the intervention of human senses and operations, and the consequent liabilities to error, are, in the greatest possible degree, avoided, and by which the time of transmission is measured and eliminated from the longitude, have been the result of careful study and long experience. The method of recording observations of time on a chronographic register, by means of a galvanic circuit, known in Europe as the *American method*, originated in the Coast Survey with the first attempts to determine longitude by means of the electro-magnetic telegraph. The *chronographic record* is made on a cylinder, revolving with nearly uniform velocity, covered with a sheet of paper, upon which a pen traces a line, interrupted or deflected for an instant, through the agency of an electro-magnet, every time the pendulum of the clock passes the vertical, and, in doing so, interrupts a galvanic circuit. Either cylinder or pen are at the same time slowly moving lengthwise; so that the line formed is a long spiral, which is thus graduated into spaces corresponding to seconds of time, and described with uniform velocity. When any instant of time is to be recorded, the observer strikes a finger key, which also breaks the galvanic circuit, and causes a similar mark to be made on the record; the position of which, in reference to the adjacent seconds marks, can be read off with great precision. In the chronographs employed in the Coast Survey, a second is generally represented by from one-half to three-quarters of an inch, the cylinder being regulated so as to make one revolution in half a minute. By an ingenious arrangement in the clock, the break for every sixty seconds or minute is omitted, and every five minutes two breaks are omitted. By this means, a whole sheet may be read off without any other note than the time of beginning and ending.

The method of determining longitudes by means of the electric telegraph is substantially, and in brief, as follows:—A transit instrument, astronomical clock, and chronograph, is mounted at each station. After suitable observations for instrumental corrections at each station, which are recorded only at

the place of observation, the clock at the eastern station is first put in connection with the circuit, so as to write on the chronographs at both stations. A number of stars, culminating near the zenith of the two stations, are selected by the observers. As they appear first upon the eastern meridian, their transit is recorded by the observer striking the finger key upon the chronographic registers at both stations. After an interval of time equivalent to the difference of longitude between the two places, which is measured by the clock, the same stars appear on the western meridian, and the observer at that station records this transit precisely as the other had done; and the difference of the two records of time is the measure of the difference of longitude.

It will be observed that these records have been obtained at both stations; and a little reflection will show that if there be any sensible interval of time consumed in the transmission of the signals, the difference of longitude obtained from the record at the eastern station will be too great by that interval, and that at the western station will be too small by the same amount. The mean result will give the longitude free from this error, and the difference measure the time of transmission of the signals through the whole circuit.

Ten stars are generally exchanged with the eastern clock in the circuit, and, after the first five, the transit instrument is reversed, so as to eliminate any residual error in the correction for collimation. The western clock is next put on, and the same operation repeated with ten other zenith stars. Not only is the result improved by the accumulation of individual results, but the advantage is gained, that the interval is measured by another clock, and the time of transmission eliminated in the inverse order of effects. The transits of the stars are generally recorded over fifteen wires. After the exchange of signals by the second clock is completed, local observations for instrumental corrections are again made, which conclude the night's work. These operations are repeated on at least three different nights; after which the observers and instruments exchange places, so as to eliminate the possible errors arising from causes connected with their individual peculiarities.

By the perfect and admirable method just sketched, we are able to measure arcs of longitude with the same degree of accuracy with which arcs of latitude have heretofore been ascertained; and a new element has thus been introduced into Geodesy. Since the general introduction of the electric telegraph and the development of the American method of longitudes, it has been applied to many of the older European geodetic surveys; and in general a very full acknowledgment has been made of their indebtedness to American science by the eminent geometers having charge of such works, with the single exception of Mr. Le Verrier, who has made use of the earlier methods of the Coast Survey, since abandoned for others more perfect, without any mention of their origin, in his report to the Academy of Sciences. It was one of the earliest discoveries

resulting from the telegraphic determinations of longitude, that the time of transmission of signals between stations several hundred miles apart is quite sensible, and that it appears in a great degree to depend on the distance. On the telegraph lines used in this country, where large iron wire is employed, and the circuit is completed through the earth, the rate of transmission has been found to be from 11,000 to 20,000 miles per second. Whether this actually was the velocity of the galvanic current, or whether it rather measures the time during which the current must be established in order to produce the effects that we observe, is, for the present, an unsolved question.

The *telegraphic* determinations of longitude have been extended from Washington northward to Philadelphia, New York, Cambridge, Bangor, and Halifax, and southward to Petersburg, Wilmington, Charleston, Savannah, Mobile, and New Orleans.

Great credit is due to the public spirit of the telegraph companies, who have extended every facility to the operations of the Coast Survey, and have given the use of the line, after the working hours, free of charge.

In sections of the coast to which the telegraph has not yet penetrated, such as Florida, Texas, and the Pacific Coast, the longitudes of cardinal points are determined by observations of moon culminations, and by chronometers. Corresponding observations of moon culminations are made at several American observatories, at the expense of the Coast Survey; and most valuable aid is derived from the series of meridian observations of the moon made at Greenwich, which are always most promptly obtained through the kindness of the Astronomer Royal. The manner in which the reductions are made to keep pace with the observations at the latter observatory is admirable, and worthy of general imitation.

The chronometric determination of longitude between Savannah, and Fernandina, in Florida, the details of which have been communicated to the American Association at the Montreal meeting, may serve in plan of execution and mode of discussion as a model for operations of a similar character.

Observations on the Magnetic Elements.—Observations of magnetic declination, dip, and intensity are made at all points where it is desirable for purposes of navigation that the declination should be known; and also at many stations of the primary triangulation, generally those where astronomical observations are likewise made.

The instruments employed are similar to those used in the British magnetic surveys; being declinometers and horizontal force magnetometers on the plans of Gauss and Weber, Lloyd and Lamont, by Jones, of London; and dip circles by Barrow and Gambey, provided with Lloyd needles for total intensity. In this manner are obtained not only the variations of the compass required for the charts, but important contributions also to our knowledge of the earth's magnetism, which have already borne fruit in the construction of a magnetic chart for the United States. This subject, one

of great scientific importance, will be found referred to more at length in the second part of this report.

DETERMINATIONS OF LEVEL.—The heights of the trigonometrical stations above the level of the sea are determined, generally, by observations of reciprocal zenith distances, which observations are frequently checked by direct levellings from the ocean. Interesting comparisons are in progress between the results obtained, and those which are furnished by barometric and thermometric measurements.

PLANE-TABLE TOPOGRAPHY.—The topographical survey is executed with the plane-table. The outlines of the shore, the irregularities of the surface, the forms and dimensions of hills, forests, streams, rocks, meadows, towns, and villages, are all represented by certain conventional modes of drawing. The topographical maps are generally surveyed on a scale of $\frac{1}{10000}$ of the natural dimensions. In localities where a great amount of detail is to be represented, such as large cities and their vicinity, a scale of $\frac{1}{5000}$ is employed, while on flat and thinly settled ranges of the coast a scale of $\frac{1}{20000}$ is used. The extent of ground represented upon a single topographical sheet depends upon the scale; on a scale of $\frac{1}{10000}$, or about 6 inches to the mile, a square foot of the drawing represents about 4 square miles of the surface of the earth. The size of the sheets is generally 30 inches by 48.

On the sheets drawn in the field, the irregularities of the surface,—the hills and depressions,—are indicated by curves, or *contour-lines*, representing the intersections, with the natural surface, of a system of horizontal planes, one above another, at equal distances apart, measured vertically. In the reduced drawings for the engraved charts, the spaces between these horizontal lines are filled up with *hachures*, the darkness of the shade being made proportional to the steepness of the slope, according to a system somewhat modified from that of Lehmann. Scales of shades have been printed, showing the distance between the hachures and the strength of stroke adapted to different scales of the maps. The absence, in general, of very abrupt slopes, and the frequency of gentle ones, rendered necessary the modification of the Lehmann system. The topographical survey is carried as far inland as is required for purposes of navigation, and for the defence of the coast.

THE HYDROGRAPHIC SURVEY.—Next in order, and based upon the positions furnished by the triangulation and topographical survey, comes the hydrography. This department of the survey supplies the results which are of most universal interest to the public, and of which the practical utility is most easy to be understood. By a thorough system of hydrographic survey, the configuration of the bottom of the ocean is mapped out, new channels are discovered, hidden dangers are detected, the situations of rocks and shoals which were but imperfectly known are determined with accuracy, the peculiarities of the tides and of the direction and velocity of tidal

currents are made apparent, and the most suitable positions are determined for the planting of buoys and the erection of beacons and lighthouses.

Soundings are taken with such frequency as to exhibit accurately the variations of depth of water; the number of casts of the lead depending on the degree of irregularity of the bottom, or its greater or less declivity. The casts are determined in position relatively to the trigonometrical stations, generally by means of angles measured with the sextant at the place of sounding, and sometimes by the use of two theodolites on shore. In soundings off the coast, and in cases where extreme accuracy of position is necessary, as in the determination of sunken rocks, the latter is the method preferred. The position of the sounding vessel is not, in practice, determined at every sounding, but at every sixth or tenth, according to frequency; and the intermediate soundings, being taken at equal intervals of time, are laid down at equal intervals between the positions determined by angles.

The soundings extend from the shore, and from the head of tide-water generally, as far seaward as the exigencies of navigation require. One of their principal uses being to assist the mariner in determining his position, it is desirable that the record should exhibit not merely the depth, but the character also of the bottom. The sounding leads are, accordingly, provided with an apparatus designed to bring up along with it a portion of the sedimentary material which it encounters; and specimens of the varieties of this material from different localities are preserved among the collections of the Coast Survey, and the respective characteristics of the bottom are indicated on the charts.

Microscopic examinations of many of these specimens have shown them to be crowded with organisms, of which the number and the *genera* vary with the depth; and hence it is not impossible that science may discover, in the laws governing the distribution of microscopic forms in the bottom of the ocean, an additional means of assisting the mariner to determine his position at sea.

Various improvements in the apparatus for bringing up these specimens of the bottom have been introduced in the course of the Survey, invented by naval officers while prosecuting these researches: among them may be mentioned Stellwagen's attachment to the lead,—a metallic cup, with a circular leather valve, closed by the pressure of the water in being drawn up,—a contrivance in common use, and answering very well the purpose intended, in moderate depths. For greater depths, Craven's specimen-box, with a metallic hinged valve or lid, and Sand's specimen-box, with a sliding valve closed by the action of a spiral spring, are used with success. For soundings exceeding 100 fathoms in depth, Massey's self-registering sounding machine is used in connection with the lead and line, with several improvements suggested by its use.

The hydrographic sheets are drawn on scales varying from $\frac{1}{5000}$ to $\frac{1}{40000}$, the more usual scales being those of $\frac{1}{10000}$ and $\frac{1}{20000}$.

Observations on the Tides.—In order to reduce all the soundings to the depth at mean low-water, the level of which is assumed for the ~~plane~~ plane of reference, observations of the tides of sufficiently long duration for this purpose are made by the hydrographic parties as part of the programme of their work. These are in connection with the system of more long-continued observations made at selected points of the coast, where tidal registers have been kept up with great attention and perseverance, for the purpose of ascertaining, upon the basis of extensive observation, the complicated laws governing the tides in the different seas which wash our shores. The observations have been made half-hourly, at a number of stations, for various periods of from one to three years. At intermediate stations, half-hourly observations during two lunations are found to be sufficient to determine the constants.

A self-registering tide-gauge is much used, by which a continuous curve representing the successive changes in the height of water is traced on paper moved by clock-work, by a pencil actuated by the rising and falling of a float in a vertical box, to which the tide has free access. The superintendent engages personally in the discussion of this most interesting subject; and he has made several communications to the Association to whom this committee owe their appointment, on the nature of these researches, and the results attained, which are to be found among the published transactions.

This subject is the more important from the fact that the tides of the Atlantic, the Pacific, and the Mexican Gulf coasts of the United States present three distinct types. The diurnal tide, which is moderately large on the Atlantic coast, and produces a diurnal inequality in height and time which is perceptible without being excessive, is very great on the Pacific; and in the Gulf of Mexico its predominance is so decided that the semi-diurnal tide is almost obliterated.

In addition to these investigations, which relate to the general phenomena of the tides, careful observations are made upon the direction and velocity of the *currents* which the tides produce. The information thus obtained is of no less importance to the mariner, than a knowledge of the amount of rise and fall of the water. It is accordingly embodied in the charts, along with those other matters of varied information which have been enumerated as essential to the safety of navigation; and thus constitutes the final contribution to that fund of positive knowledge of the sea and its bed, of its changes and the laws that govern them, on which the commerce of the country so largely depends for its safety.

Exploration of the Gulf Stream.—A hydrographic survey of our coast would be incomplete, if it did not embrace the investigation of the remarkable ocean current which divides the waters adjacent to our Atlantic

coast from the wide ocean beyond. The importance of its explanation is recognized in the original law of 1807, by extending the scope of the survey so as to embrace it. On assuming charge of the work, Prof. Bache at once organized a system of observations for the purpose of determining its limits and principal characteristics.

Previous to that time, casual observations had been made by private and public vessels of England and America, the results of which were collected by Major James Rennell, F. R. S., and published in his work on the currents of the Atlantic ocean. These observations were confined to the surface, and gave only vague results.

The method of exploration adopted by Professor Bache was, to determine the limits of the stream by the temperature of its waters at all depths, by means of deep sea thermometers, along lines perpendicular to its several directions. This work was commenced in 1845, and has been continued up to the present time. Sixteen sections have been run across the stream at different points of the coast, along which the temperature of the water at various depths has been determined, and also sections of the bottom, wherever it has been found possible to obtain soundings.

For these explorations thermometers are required specially adapted to the purpose. Ordinary thermometers would indeed suffice for observing the temperature of the surface, but in order to obtain that prevailing at some depth it is necessary that they should be self-registering, and able to withstand the crushing pressure of the water. They must be of simple construction, not liable to derangement by ordinary shocks, nor affected in their indications by the enormous pressure to which they are exposed; they must readily acquire the temperature of the water, which should have free access to all parts, and they must therefore be made of materials not liable to corrosion by salt water. After many experiments on a variety of instruments, as Rutherford's, Sixe's, Breguet's, and Jurgensen's, the metallic self-registering thermometers invented by Saxton, the assistant of Prof. Bache in the office of weights and measures, was found best to fulfil the above conditions, and it has superseded all others in use. The statistical table shows that over 3400 casts have been made and registered for depth and temperature of the Gulf-stream. The results arrived at from the discussion of these observations will find mention in the second part of this report.

The work is still in active progress; and it is much to be desired that the exploration eastward from the American side of the northern part of the stream, should be met by a corresponding exploration from the shores of Great Britain westward, which would complete our knowledge of the Gulf-stream, throughout its whole extent from the shores of Florida to those of Ireland.

Office-Work and Publication of Charts. — The results of the field-work are prepared for publication at the office of the Coast Survey, in Washington City. The reductions of geodetic and astronomical observa-

tions are, in the first instance, made by the observers themselves; but a second computation is independently made in the *computing division* of the office by persons having no connection with the field-work. Strict scrutiny of the observations, and perfect security against errors of computation, are thus insured; the two computations being examined and compared by an experienced person, who refers whatever discrepancies may appear to exist to the Superintendent.

Of the formulas and methods employed in the computation, not even a sketch can be given in a general review like the present. It will be sufficient to state that in this, the purely mathematical part of the operations, as marked improvements have been made as in any other branch of the work. The processes are highly systematized, and partake of the highest refinements of modern science, as is evidenced by the systematic application of the method of least squares in the discussion and adjustment of results.

The construction of the maps and charts for publication commences in the *drawing division* of the Coast Survey office.

The projections of the meridians and parallels are made according to the system of *polyconic development* of the earth's surface, of which special accounts, with accompanying tables, may be found in the C. S. reports for 1853 and '56. On these projections, the positions of the triangulation points are laid down according to their latitudes and longitudes, obtained by the geodetic operations. On the sheets covered by the topographical and hydrographic surveys, the triangulation points are likewise laid down, with reference to similar projection lines, and the reductions to the scales of publication are thus made with extreme accuracy by indefinitely projecting the controlling points of the survey, and drawing in the details by means of small squares, or by the pantograph. The *camera lucida* has sometimes been employed, but is found too trying to the eyes of draughtsmen. It may be mentioned here that experiments are in progress having in view the application of photography to the reduction of the maps, and that there is good reason to hope for successful results.

The maps and charts emanating from the Coast Survey are divided into two general classes—viz.: *preliminary* or provisional charts and sketches, issued with as much expedition, after the individual surveys, as is consistent with accuracy of general portraiture, and designed to supply the more immediate and pressing demands of commerce; and the *finished charts* proper, which must embody all the information furnished by the survey, even of the minutest detail, and which ought at the same time to be executed in the style of the highest existing artistic excellence.

The charts are various in character, according to the immediate objects which they are designed to subserve. Thus, one description of chart has for its use to convey to the navigator a just notion of an extended coast line, and of the relative positions of objects most conspicuous at a distance, so as to enable him to identify his position as he approaches from the open sea. Another

gives him the minuter information which he needs when the purposes of his voyage bring him for any reason closer in-shore. They are, therefore, classified under the three heads of *general coast charts*, *coast charts*, and *charts of harbors, anchorages, &c.*

The *general coast* (or off-shore) *charts*, on the scale of $\frac{1}{400000}$, represent the shore-line of the coast and its general topographical features, so as to be readily recognized by the navigator approaching it. Omitting minute details, they show at a glance the contour of the shore, the location of the islands, shoals, and rocks which the navigator may encounter in approaching the main land; the soundings off-shore, selected in-shore soundings, and finally the principal natural and artificial landmarks.

The *coast* (or in-shore) *charts*, on the scale of $\frac{1}{80000}$, and the *harbor charts*, on various scales, from $\frac{1}{5000}$ to $\frac{1}{80000}$, present with minute accuracy every natural feature or other object above or beneath the water which can be introduced without producing confusion or indistinctness. In these charts, the hydrography is so elaborately displayed as to indicate, by the shades of depth, the fathom lines and the soundings, the safe route for a vessel of any given draught, and, as a necessary consequence, to exhibit, at sight, the principal channels by which every important place may be approached. The lines of range of natural landmarks, or of lights and beacons, the appearances of different light-houses and the characters of their lights, with all other indications by which channels are signalized to the mariner, are also everywhere given in the fullest manner. They further contain sailing directions designed to furnish information in entering harbors, graphic views of important landmarks, and sketches of the position and characteristics of light-houses, beacons, and buoys—such as may serve to assure the navigator of his true position, whenever any of these objects are in sight. The topography of the shore and of the land for some distance from the shore is furthermore minutely given, for various reasons, some of which have been hinted at, and of which others will be alluded to hereafter.

Of the *general coast charts* ($\frac{1}{400000}$), it is estimated that the Atlantic and Gulf coasts will be covered by sixteen sheets.

The scheme of *coast charts* ($\frac{1}{80000}$), planned for these portions of the coast, embraces one hundred and thirteen sheets.

The Pacific coast is as yet too little known in its minute features to afford a basis for a definite estimate.

Besides these *finished charts*, which, from their nature, require a lengthened period for the collection of the data from which they are compiled, and are also slow of execution,—their elaborate details requiring the highest skill in drawing and engraving,—there is issued a series of *preliminary charts* and *hydrographic sketches*. These, embodying information which it is desirable to make accessible at the earliest available opportunity, are prepared and published as soon as possible after the completion of the work in the field. For the principal charts of this latter class, the scale of $\frac{1}{200000}$ has been adopted; they are less elaborately finished than those before described,

and are designed to meet the wants of the public, until the more perfect maps can be made ready for issue. They also enable the office department of the survey to keep up with the operations in the field and afloat, each season's work as it is turned into the office being drawn and engraved on the plate, and, when required, a new plate is made by the electrotype process, large enough to retain the old and receive the new work. Of the *preliminary sea-coast charts*, it is estimated that the Atlantic and Gulf coasts will require thirty-three sheets.

When the charts are drawn and verified, they pass into the *engraving division* of the office, where they are executed on copper by a corps of engravers, among whom there are some artists of distinguished merit. Here, as in every other department of the work, the division of labor is productive of economy in time, combined with superior excellence of results. The engraving of outlines, of hill-topography, of the dotted shading of the sea-bottom, of the figures denoting the soundings, and, finally, of the lettering, are so many different branches of the art, executed by different persons, who have, by talent or practice, acquired superior skill. When the plates are completed, copies are taken of them by the *electrotype* process, which are used for printing the charts, while the original plates are preserved among the archives.

The electrotyping establishment of the Coast Survey is very extensive, and one of the most successful in the world. It was in practical operation several years before the process came into general use, and considerable advances were made in the art at this establishment. The method of *iodizing* the matrix, which effectually prevents adhesion without interfering in the least degree with the perfect sharpness of the cast, was then discovered, and, by an admirable system of experiments, the best size and arrangement of batteries, the proper temperature of the solutions, and all other conditions necessary to produce the best, most uniform, and cheapest results, were developed. The practical use of the process is not confined to the production of copies for printing. The division of labor in engraving the charts is often very much facilitated, and great despatch in their production is attained, by dividing, and executing them in two, or even four separate pieces, which are afterwards joined on a common electrotype plate.

The charts are finally printed at the Coast Survey office, and distributed to sale agents in the principal seaports. The prices are fixed at very low rates, varying from fifteen to seventy-five cents per sheet, so as to place a complete set of sheets within the reach of every navigator. Copies are also freely distributed to seminaries of learning, public libraries, and other institutions of a similar character.

PUBLICATION OF OBSERVATIONS AND METHODS.—The importance of an early publication of the observations made in the progress of the Coast Survey, and of the methods practised in the execution and computation of the work, was repeatedly urged upon Congress by the Superintendent, and means were appropriated towards that object in 1854–55, and in the two

subsequent years. It has been the reproach of works of this kind, that the results only are furnished, while the data from which they are derived are not presented for scrutiny at all, or if at all, so late that for practical use they have lost much of their value. The publication of the archives, while it secures the work against loss by accident, and submits it to the criticism of the world, has the further very great advantage, that it insures the full information from, and responsibility of, those by whom the work is executed.

Considerable progress has been made in this work, as appears from the account given in the annual report of the Superintendent for 1856 and 1857, where also the plan of publication is developed, of which a brief sketch must suffice here. The order of arrangement for the geodetic work is at first necessarily chronological, the volumes for each year comprising the records and results of all the various classes of work; while after the completion of the survey the volumes would most naturally arrange themselves according to the different operations. With this end in view, the plan has been carefully laid out so that the matter contained in the annual volumes may ultimately be divided, and rearranged so as to form volumes relating to separate subjects. The *record* of the observations is given in full, and being unchangeable, is kept separate from their reduction, of which the principal steps are given, and which may be liable to change from accumulation of data or from improvement of methods. As far as practicable the record and reduction of the observations are arranged on opposite pages. The volumes thus in course of preparation embrace, beside other subjects, the operations of Geodesy, Chronometric Longitudes, Telegraphic Longitudes, Explorations of the Gulf-stream, and Sailing Directions. It will be remembered, that, in addition to the great variety of interesting communications on subjects connected with the Coast Survey made by Prof. Bache, it was the exhibition of a volume of proof-sheets of the geodetic volume to the members of the Association at the Montreal meeting which led to the appointment of the present Committee, who can only express their deep regret on learning that the publication of the work has been unavoidably suspended for want of the necessary appropriation to carry it forward, and their earnest hope that, when the temporary embarrassment of the public treasury is relieved, the means will be supplied for its speedy consummation. The publication of the observations and methods will be hailed with great satisfaction by the men of science at home and abroad, while the volumes relating to the harbors and coast will have nearly the same interest for commercial men and navigators.

ORGANIZATION AND ECONOMICAL MANAGEMENT OF THE COAST SURVEY.—The whole work is under the administrative direction of the U. S. Treasury Department. The Superintendent arranges the plan of conducting the work, and issues instructions for its execution to his assistants; he directs and is responsible for the accuracy of all the scientific parts of the work, and controls the expenditures, making an administrative examination of the ac-

counts, which is a great source of economy. Besides performing these duties of superintendence, he engages personally in observations in the field, and in those able discussions of the results of which the pages of our scientific journals contain ample evidence.

The corps of assistants is composed of three classes,—civilians, officers of the army, and officers of the navy. The civilians, many of whom have been trained in the Survey, entering as cadets, or *aids*, as they are designated, and rising by merit to higher grades, form a nucleus of a more permanent kind. They preserve uniformity in the methods of the survey, and can be called upon freely for duty of every kind. The officers of the Army and Navy are detailed by the heads of their respective Departments, on application of the superintendent; they are liable to be changed frequently, as the exigencies of the military or naval service require. Receiving no extra emolument for their services on the Coast Survey, their positions are only valuable to them under peculiar circumstances, which change frequently, and there is a limit, therefore, to the calls upon them for service. Without the nucleus of civilians the whole work might be disorganized by calls for the services of the Army and Navy officers in their immediate professional line. On the breaking out of the war with Mexico, all the officers of the line of the Army, and part of those of the staff, serving on the Coast Survey, were detached from it. The harmonious coöperation of these three classes of persons which has been maintained during the past fourteen years is highly advantageous to the country, and could not, it is obvious, be secured except under the direction of a distinguished civilian; since questions of rank and authority between officers of the different branches of the service would inevitably interfere disastrously to the best interests of the work, if its direction were confided to either the War or Navy Department; and if the operations on land and at sea were carried on under distinct organizations, then would result a want of coöperation as to time, methods and objects, by which the hydrographic survey would fail in a great measure to derive from the land-work those elements of accuracy which are essential to its perfection.

The progress of the Coast Survey, from year to year, is communicated to Congress in the annual reports of the Superintendent. Besides an account of the extension of the work in the different sections, accompanied by sketch-maps illustrating the same, these reports contain, as an appendix, the preliminary maps, charts and sketches produced during the year, and valuable contributions to knowledge in the form of scientific discussions of various subjects connected with the survey, such as tides and terrestrial magnetism, and of new methods of observation or computation developed by the persons engaged in the work. The high character for interest and usefulness which these reports sustain is too well known and universally acknowledged, to require commendation. With wise liberality Congress has printed large editions of these for general diffusion, and the distribution list shows

that they are in great demand not only on the seaboard, but also in the interior states, evincing the gratifying fact that large numbers of citizens other than those immediately engaged in commerce and navigation feel an appreciative interest in a work designed for the benefit of the whole nation.

It may not be inappropriate in the general sketch which we are taking of the actual operations of the Coast Survey, to observe that the *economy* which has marked the conduct of this national work has been no less remarkable than the comprehensiveness of its scope, the rapidity of its execution, the scientific exactness of its processes, or the substantial value of its results. It may very safely be said that no other government has hitherto succeeded in securing, in this branch of its service, results so large and so valuable in so little time, and at so little expense. This fact is no doubt in a great measure due to the wisdom with which the work has been laid out, to the administrative ability which has secured activity and efficiency in all its departments, to the division of labor, and to the personal ability or skill, as well of the subordinate members of the corps, as of the chief. But it is also, and in no less measure, due to the system of disbursement and financial control, and to the method of keeping the accounts, introduced by the present Superintendent, which are judiciously devised so as to protect, in the most effectual manner, the public interests.

A careful study of the question of relative progress and expenditure, and comparison of the cost of our national survey with that of the surveys of other nations, for which the data are given in a special report prepared by the Superintendent in 1857, in compliance with a call from the Treasury Department, have led the Committee to the conclusion expressed at the close of this report in regard to the economy of the present system. The details are of a character which would extend this report to an undue length, but the Committee may express their desire that the document referred to be made accessible to the public through its publication by government.

PART II:—RESULTS.

THEIR BEARINGS UPON THE NATIONAL WELFARE, AND UPON THE ADVANCEMENT OF SCIENCE.

IN passing to consider the results actually wrought out in the progress of the survey of our coast, and the various important bearings of these, both useful and scientific, the Committee are aware that it is difficult to avoid the appearance of occasional repetition: since any sketch, however cursory, of the history of the work, or any description, however imperfect, of the processes employed in its execution, must, from the nature of the case, be in itself, to some extent, an anticipation of results; though these be mentioned only by way of allusion, or introduced purely for the sake of explanation, or of illustration. In so far, nevertheless, as may be practicable, care will be taken not to retread ground already beaten.

The valuable results which the Coast Survey has been, and still continues to be, the means of securing, are distinguishable into two classes, according as we restrict our view to the objects for the sake of which the Survey was expressly instituted, or extend it to those more varied interests which are incidentally, but no less positively, promoted by its operations.

For the sake of convenience, we will refer to these two classes of results under the heads, *direct* and *collateral.*

DIRECT RESULTS:—BENEFITS TO NAVIGATION AND COMMERCE.

The direct results are the numerous and invaluable aids and benefits to navigation and commerce, which, being the ends most immediately and distinctly contemplated in the origination of the work, it is in the importance which attaches to them that the main argument in favor of its prosecution to completion must always be found.

We may indeed dwell with just and honorable pride upon the services rendered to science, in its various branches, through the instrumentality of a work which can only be prosecuted by the aid of recondite scientific principles, applied in practice by accomplished and zealous scientific men. As physicists, the members of this Association may even, perhaps, regard with higher satisfaction the contributions furnished to our knowledge of nature, the improvements originated for us in methods of observation,

and the ingenious mechanical contrivances invented for promoting instrumental accuracy, which we owe to the men engaged in this great public work, and, through them, to the work itself, than our tastes may incline us to feel in view of the more material and immediately tangible results which flow from it; but we must not forget that the majority of mankind look upon all undertakings which involve expenditure to the public from a utilitarian point of view; and while, therefore, we may justly challenge the admiration of all men, whether they be professedly scientific or not, for results which we ourselves so greatly prize, yet we must not expect that all men will so far enter into our enthusiasm as to undertake such works for the sake of such results only. In the present case, fortunately, the directly useful results accomplished are so palpably great, that it will be sufficient to name them, in order to satisfy the most exacting economist in regard to the wisdom of the outlay by which they have been secured.

We therefore present now a summary view of the progress already made towards the completion of the work, followed by a condensed table, compiled from data obtained from the Coast Survey office, showing, in two parallel columns the work executed previous to 1844, under the superintendence of Mr. Hassler, and that from 1844 to 1857, inclusive, under the superintendence of Professor Bache.

PROGRESS, OR PROPORTION OF THE WHOLE COAST SURVEYED.—The survey has been extended into every seaboard State and Territory of the United States, on the Atlantic, Gulf of Mexico and Pacific coasts, and is now in progress, either in field or office-work, in all of them.

For the purpose of estimating its progress towards completion, we may consider either the extent of general coast-line (omitting minute indentations), or the length of the shore, or water-line, including that of bays, sounds, islands and rivers, to be covered by the triangulation.

The general coast-line of the Atlantic (including Delaware and Chesapeake, as well as all open bays,) is estimated, from recent measurements, made on the Pro~~fessor's~~ gress sketches, in the office of the Survey, at 3,036 miles; that of the Gulf of Mexico, at 2,162 miles; and that of the Pacific (including the Straits of Fuca), at 1,866 miles: making, in all, 7,064 miles.

Of the foregoing, there have been already covered by triangulation, on the Atlantic coast, 2,372 miles; on the Gulf coast, 780 miles; and on the Pacific coast, 325 miles: making, in all, as appears in the ~~preceding~~ following table of statistics, 3,477 miles.

A measurement of the shore-line (including bays, sounds, islands and rivers,) covered by the triangulation, made in a similar manner, gives for that of the Atlantic coast, 14,723 miles; of the Gulf of Mexico, 10,406 miles; and of the Pacific coast, 4,252 miles: in all, 29,381 miles. Of this shore-line, the triangulation has already extended over, on the Atlantic coast, 10,787 miles; on the Gulf coast, 4,075 miles; and on the Pacific coast, 1,288 miles: in all, as appears in the table of statistics, 16,150 miles.

Each of these two modes of estimating the work already executed, and that remaining to be done, affords us this conclusion: that the Atlantic sections are nearly three-fourths done, and the Gulf sections one-third done.

Our knowledge of the minuter features of the Pacific coast being as yet in a much less advanced state than that of the other two portions of the coast, renders a precise estimate for it comparatively less practicable; as far, however, as we can venture to determine in this matter, the Pacific section is not quite one-fourth executed.

With the limitation just specified, taking the whole coast of the United States into consideration, the survey is carried forward about one-half to completion. This estimate is based on the triangulation executed; a similar consideration of the topography will lead us very nearly to the same conclusion.

The length of the general coast being taken, as above stated, it appears that the topography is executed over 1,889 miles in the Atlantic section, 764 miles in the Gulf section, and 259 miles in the Pacific section: in all, 2,912 miles, out of 7064 miles, showing two-fifths of the whole. It is to be borne in mind, in making this estimate, that the topography is, in general, a whole season behind the triangulation, and that the hydrography thereafter follows in its turn.

Looking at these data of the field-work, and adding to our view the office-work consequent thereon, we are justified in considering that, at the rate of appropriation for the three years from 1855 to '58, and with the like efficient management, the survey of the Atlantic and Gulf coasts may certainly be essentially completed in from twelve to fifteen years. This agrees substantially with the latest estimates of the superintendent of the work.

Estimates of time for completion were, in the early stages of the survey, necessarily but conjectural, on account of the inaccuracy and looseness of the geographical maps of the coast, then extant, the length of shore-line shown on them being greatly in defect; but, as data for a more and more close approximation to the true amount have become available by the operations of the survey itself, our information on this subject is now so much more detailed and reliable, that we may look with a tolerable degree of confidence on the conclusion to which we have arrived.

Extent of connected triangulation, and localities where the survey is yet incomplete.—The triangulation is continuous from Mount Desert, in Maine, to Shallotte inlet, south of Cape Fear, in North Carolina, stretching over more than ten degrees of latitude, and as many of longitude, including the coast of ten States, and the greater part of the coast of two others. Then, with an interval of about seventy miles, it extends along the coast of South Carolina and Georgia, with two gaps, to the Ossabaw entrance. It covers, on the coast of Georgia, Sapalo entrance, St. Simon's sound and Brunswick harbor, St.

Mary's, Georgia, and Fernandina harbor and St. John's river, Florida. It is continuous from Cape Florida to the Marquesas, west of Key West, completing the connection of the outer keys and reefs of South Florida. On the western coast of Florida, after a gap from Cape Sable to Crystal river, it extends to beyond Cedar Keys; over Ocilla river entrance; St. Mark's harbor; from East Pass through St. George's and St. Vincent's sounds, including Apalachicola harbor; St. Andrew's bay and Pensacola harbor and approaches. On the coast of Alabama and Mississippi, it spans Mobile bay and its approaches; extends along Mississippi sound and part of Lake Ponchartrain, connecting Mobile and New Orleans. On the coast of Louisiana, it covers Chandeleur sound to Isle au Breton sound; part of the Delta of the Mississippi; Isle Dernière and Caillou bay; Atchafalaya and part of Côte Blanche bays. On the coast of Texas, it extends over Galveston entrance, the shores of East and West bays, and the coast as far as Matagorda bay, inclusive, and is commenced at the Rio Grande, and is being prosecuted northward.

On the coast of California the main triangulation is complete from north of Sonora mountain to south of Monterey bay, and the secondary triangulation, connected with this along the coast-line, is nearly completed. Secondary triangulation has been executed at San Diego, near San Pedro, along the Santa Barbara coast, and on the Santa Barbara Islands; in San Francisco, San Pablo, Suisun, Ballenas, Drake's and Tomalas bays. The river entrances of the coast of Oregon have been surveyed, and Columbia river triangulated up as far as Astoria. On the coast of Washington Territory, the triangulation has extended over Shoalwater bay, Washington sound, Admiralty inlet and parts of Puget's sound, and Hood's Canal.

On all portions of the coast where the scheme of the main triangulation did not afford the requisite facilities for immediate progress, preliminary triangulations have been executed in advance, to serve as a basis for the detailed work, and to be verified in turn.

Directly on the foregoing triangulation, the topography has followed with, generally, but one season's interval, and, taking hold of the determinations made by both these series of operations, the hydrography has proceeded to take its part in the combined work.

It may be here remarked that the proportion of the amount of topography to that of the other parts of the work has been, since 1844, diminished purposely, it not being carried so far inland, partly in consequence of the objections urged, in the discussions in Congress, to the extent of topographical detail carried out in the earlier stages of the work, and partly owing to the different character of the southern coast, where the larger proportion of the recent work has been carried on.

STATISTICS OF FIELD AND OFFICE-WORK OF THE UNITED STATES COAST SURVEY.[1]

	Previous to 1844.	From 1844 to 1857, inclusive.	Total from commencement to 1857, inclusive.
Reconnaissance.			
Area, in square miles,	9,642	43,171	52,813
Base Lines measured.			
Primary, number of,	1	9	10
Secondary, number of,	2	41	43
Length of, in miles,	19½	133¾	153¼
Triangulation.			
Area, in square miles,	9,076	31,949	41,025
Extent of general coast in miles,	570	2,907	3,477
Extent of shore-line, in miles, including bays, sounds, islands and rivers,	1,588	14,562	16,150
Geographical positions determined,	1,183	5,789	6,972
Astronomical operations.			
Stations occupied for azimuth,	9	59	68
do. do. latitude,	9	100	109
do. do. longitude,	1	73	74
Magnetic stations.			
Magnetic stations occupied,	0	183	183
Topography.			
Area surveyed, in square miles,	6,039	8,507	14,546
Length of general coast,	414	2,498	2,912
Length of shore-line, in miles, including rivers, creeks and ponds,	7,667	25,203	32,870
Length of roads, in miles,	12,239	11,394	23,633
Hydrography.			
Soundings, number of,	808,147	4,080,738	4,888,885
Specimens of bottom preserved,	1,029	5,972	7,001
Soundings in Gulf-stream for temperature,	0	3,429	3,429
Tidal stations, permanent,	20	275	295
do. temporary,	107	492	599
Current stations occupied,	0	783	783
Records.			
Total number of volumes of observations and computations,	566	8,485	9,051
Maps and Charts.			
Topographical maps, originals,	168	507	675
Hydrographic charts, originals,	142	457	599
Total number of manuscript maps and charts,	325	1,325	1,650
Number of sketches made in field and office,	311	1,189	1,500
Engraving and Printing.			
Engraved plates of finished charts, number of,	5	61	66
Preliminary charts, sketches and diagrams, for Coast Survey annual reports,	0	319	319
Electrotype plates made, number of,	0	400	400
Finished charts published, number of,	0	64	64
Preliminary charts and hydrographic sketches published,	0	258	258
Printed sheets of maps and charts distributed from office,	0	66,576	66,576
Printed sheets placed in hands of sale agents,	0	42,948	42,948

CHARTS PUBLISHED.—The charts which have been described, in their general character, in the first part of this report, exhibit such an exact and clearly intelligible delineation of the coast-line in its contour and topography, and of the adjacent waters off-shore, and in bays and inlets, and, to a certain extent, even in rivers, as to enable the mariner to choose his course with confidence, avoiding hidden dangers, and following the secure channels as easily as if the sea-bottom itself were exposed to his view. Or, rather, they are a safer guide than the sight of the bottom could be; since they enable him at a glance to take in a wide area on the chart, while a direct inspection could extend, even under the most favorable circumstances, only to a limited space in the immediate vicinity of his vessel. The number of such delineations, or charts, which the American Coast Survey has produced, is already very great: various in character, according to the immediate objects which they are designed to subserve. Of the finished charts, there have been published forty-seven sheets of charts of harbors, anchorages, and the like, to various scales, from $\frac{1}{5000}$ to $\frac{1}{80000}$; eight sheets of "in-shore" or coast-charts, to scale of $\frac{1}{80000}$; and one sheet of "off-shore" or general coast-chart, to scale of $\frac{1}{400000}$. Of the preliminary sea-coast and harbor charts, there have been published upwards of eighty sheets, to various scales from $\frac{1}{10000}$ to $\frac{1}{400000}$: and of hydrographic sketches, upwards of one hundred and twenty.

As regards the finished maps, it may be said that, in point of execution, they do honor to the government under whose authority they have been put forth. That they are characterized by the greatest precision, may of course be said, since this is the first and essential condition which gives to any map its value: but considered, also, as specimens of art, they are unsurpassed in any particular, whether in the drawing, engraving, or printing, by any works of their class ever produced by public or private enterprise, at home or abroad. There results from this the double advantage, that while their elaborate execution carries with it a certificate of their refinement and accuracy, and gives to the navigator who consults them assurance of their truth, it at the same time reflects credit upon the country, and presents a model for imitation which cannot fail to improve the standard of artistic execution in every work, whether of a scientific or of a purely æsthetic character, produced among our people.

Below is given a list of the finished charts already published, arranged in geographical order, from Maine to Washington Territory; also, a list, arranged in like manner, of preliminary charts and hydrographic sketches published, omitting such of these latter as represent reconnaissances and preliminary surveys afterwards superseded by more detailed surveys.

LIST OF PUBLISHED COAST SURVEY FINISHED MAPS AND CHARTS.

Name of Map or Chart.	State.	Scale.	Year of publication.
Richmond's island harbor,	Maine.	1: 20,000	1851
York river and Cape Neddick harbors,	"	1: 20,000	1854
Newburyport harbor,	Mass.	1: 20,000	1855
Gloucester harbor,	"	1: 20,000	1855
Salem harbor,	"	1: 25,000	1855
Boston harbor,	"	1: 40,000	1857
Wellfleet harbor,	"	1: 50,000	1853
Nantucket harbor,	"	1: 20,000	1848
Hyannis harbor,	"	1: 30,000	1850
Harbor of Edgartown,	"	1: 20,000	1848
Harbors of Holmes' Hole and Tarpaulin Cove,	"	1: 20,000	1847
Harbor of New Bedford (edit. in 1846),	"	1: 40,000	1850
General coast from Gay Head to Cape Henlopen,		1:400,000	1852
Fisher's island sound,	Conn.	1: 40,000	1847
Harbor of New London,	"	1: 20,000	1848
Mouth of Connecticut river,	"	1: 20,000	1853
Harbor of New Haven (edit. in 1846),	"	1: 30,000	1852
Harbors of Black Rock and Bridgeport (edit. in 1848),	"	1: 20,000	1852
Harbors of Sheffield and Cawkins island (edit. in 1848),	"	1: 20,000	1852
Huntington bay,	New York.	1: 30,000	1849
Oyster bay, or Syosset harbor,	"	1: 30,000	1847
Harbors of Captain's islands, east and west,	"	1: 20,000	1849
Hart and City islands,	"	1: 20,000	1851
Sachem's Head harbor,	"	1: 10,000	
Hell Gate,	"	1: 5,000	1851
Long Island sound, eastern part, (edit. 1848),	Conn., R. I. and N. Y.	1: 80,000	1855
" " " middle " "	Conn. and N. Y.	1: 80,000	1855
" " " western "	Conn. and N. Y.	1: 80,000	1855
New York bay and harbor and the environs (4 sheets),	New York.	1: 30,000	1844
New York bay and harbor and the environs (2 sheets),	"	1: 30,000	1845
New York bay and harbor and the environs,	"	1: 80,000	1845
South coast of Long Island, eastern part,	"	1: 80,000	1857
" " middle "	"	1: 80,000	1857
" " western "	"	1: 80,000	1851
Little Egg harbor,	N. J.	1: 30,000	1846
Delaware bay and river, sheet No. 1,	N. J. and Del.	1: 80,000	1848
" " " No. 2,	N. J. and Del.	1: 80,000	1848
" " " No. 3,	N. J., Del. and Penn.	1: 80,000	1848
Harbor of Annapolis and Severn river,	Md.	1: 60,000	1846
Mouth of Chester river,	"	1: 40,000	1849
Pasquotauk river,	N. C.	1: 60,000	1850
Beaufort harbor (on steel),	"	1: 20,000	1857
Charleston harbor (edit. in 1855),	S. C.	1: 30,000	1856
Key West harbor and its approaches,	Fla.	1: 50,000	1855
Mobile bay entrance,	Ala.	1: 40,000	1851
Mobile bay,	"	1: 80,000	1856
Cat and Ship island harbors,	Miss.	1: 40,000	1850
Galveston bay entrance (edit. 1853),	Texas.	1: 40,000	1856
San Diego bay,	Cal.	1: 40,000	1857
Monterey harbor,	"	1: 40,000	1852
Humboldt bay,	"	1: 30,000	1852
Trinidad bay,	"	1: 20,000	1851
Columbia river entrance (Alden's survey),	Oregon.	1: 40,000	1854

LIST OF PUBLISHED COAST SURVEY PRELIMINARY CHARTS AND HYDROGRAPHIC SKETCHES.

Name of Chart or Sketch.	State.	Scale.	Year of publication.
Kennebec river entrance, prelim. chart, - -	Maine.	1: 30,000	1857
Portland harbor, prelim. chart, - - -	"	1: 20,000	1854
" " (for harbor commissioners), -	"	1: 10,000	1855
Portsmouth harbor, prelim. chart, - -	New Hamp.	1: 20,000	1854
Ipswich and Annisquam harbors, prelim. chart,	Mass.	1: 20,000	1855, '57
Gloucester harbor, prelim. chart, - - -	"	1: 20,000	1854
Stellwagen's bank, prelim. chart, - -	"	1: 400,000	1854, '55
Sea-coast of Maine, N. Hampshire, and part of Massachusetts, prelim. chart, - - -	"	1: 200,000	1857
Current-chart of Boston harbor, - - -	"	1: 100,000	1851
Minot's ledge, - - - - - - - -	"	1: 10,000	1853
Plymouth harbor, prelim. chart, - - -	"	1: 20,000	1857
Provincetown harbor, prelim. chart, - -	"	1: 50,000	1857
Davis' South shoal, - - - - - -	"	1: 200,000	1846–'53
Nantucket shoals, prelim. chart, - - -	"	1: 200,000	1854
Tidal currents of Nantucket shoals, - -	"	1: 300,000	1854
Monomoy shoals, prelim. chart, - - -	"	1: 40,000	1854, '56
Muskeget channel, prelim. chart, - - -	"	1: 60,000	1854, '55
Bass river harbor, prelim. chart, - -	"	1: 40,000	1854, '57
Harbor of Wood's Hole, prelim. chart, - -	"	1: 20,000	1857
Sow and Pigs reef, - - - - - -	"	1: 240	1853
Sea-coast of Massachusetts, southern part, prelim. chart, - - - - - - - -	"	1: 200,000	1856, '57
Tidal currents of Long Island sound and approaches, - - - - - - - -		1: 800,000	1854
Buttermilk channel, New York harbor, -	New York.	1: 5,000	1849
Romer and Flynn's shoals, - - - - -	"	1: 40,000	1853
Changes in Sandy Hook since 1779, - -	"	1: 10,000	1851, '53, '55
New York bay and harbor, prelim. chart, -	"	1: 80,000	1857
Hudson river, lower sheet, prelim. chart, -	"	1: 60,000	1855
" " *comparative chart, showing the* change since 1852, - - - - - -	"	1: 20,000	1856
Sea-coast of Del., Md. and part of Va., prelim. chart, - - - - - - - - -		1: 200,000	1852
Delaware and Chesapeake bays and sea-coast, prelim. chart, - - - - - - - -		1: 400,000	1855
Chincoteague inlet and shoals in vicinity, -	Va.	1: 40,000	1852, '53
Wachapreague, Machipongo and Metomkin inlets, - - - - - - - - - -	"	1: 40,000	1853
Ship and Sand Shoal inlets, prelim. chart, -	"	1: 40,000	1854
Chesapeake bay, upper part, 3 sheets, prelim. chart, - - - - - - - - -		1: 80,000	1857
Patapsco river and harbor of Baltimore, prelim. chart, - - - - - - - - -	Md.	1: 60,000	1856
Rappahannock river, 4 sheets, prelim. chart,	Va.	1: 20,000	1856
" " 2 sheets, from entrance to Occupacia creek, prelim. charts, - -	"	1: 60,000	1857
York river entrance, Va., prelim. chart, - -	"	1: 60,000	1857
James river (upper sheet) from Richmond to City point, prelim. chart, - - - -	"	1: 40,000	1855
Hampton roads and Elizabeth river, prelim. chart,	"	1: 40,000	1857
Norfolk harbor, prelim. chart, - - - -	"	1: 10,000	1857
Sea-coast of Va., 2 sheets, prelim. chart, -	"	1: 200,000	1853, '54
Part of sea-coast of Va. and entrance to Chesapeake bay, prelim. chart, - - - -	"	1: 200,000	1855
Gulf-stream explorations, sketch of limits, -		1:5000,000	1853–'55
Albemarle sound, prelim. chart, - - - -	N. C.	1: 200,000	1855
Wimble shoals, - - - - - - - -	"	1: 80,000	1854

LIST OF PUBLISHED COAST SURVEY PRELIMINARY CHARTS AND HYDROGRAPHIC SKETCHES.

Name of Chart or Sketch.	State.	Scale.	Year of publication.
Hatteras shoals,	N. C.	1: 120,000	1850, '51
Hatteras inlet (harbor of refuge),	"	1: 20,000	1849–'52, '57
Ocracoke inlet,	"	1: 40,000	1852, '57
Sea-coast of N. C., from Hatteras to Ocracoke, prelim. chart,	"	1: 200,000	1856, '57
Sea-coast of N. C., from Cape Lookout to Bogue inlet, prelim. chart,	"	1: 200,000	1857
Beaufort harbor, N. C., prelim. chart,	"	1: 20,000	1854
" " " comparative chart,	"	1: 10,000	1857
New river and bar,	"	1: 15,000	1852
Cape Fear river and New inlet entrances, prelim. chart,	"	1: 40,000	1853
Cape Fear river (lower part) from Federal point to Wilmington, N. C., prelim. chart,	"	1: 30,000	1856
Entrances to Cape Fear river, (lower part), prelim. chart,	"	1: 30,000	1855, '57
Entrances to Cape Fear river, comparative chart, (1851–'56),	"	1: 20,000	1857
Winyah bay and Cape Roman shoals, prelim. chart,	S. C.	1: 100,000	1854
Winyah bay and Georgetown harbor, prelim. chart,	"	1: 40,000	1855
Roman inlet, (harbor of refuge),	"	1: 40,000	1857
Bulls' bay, (harbor of refuge),	"	1: 40,000	1849, '51, '57
Charleston harbor, Maffitt's channel, comparative chart,	"	1: 5,000	1854–'56
Changes in Charleston bay from 1850 to 1855,	"	1: 10,000	1855
North Edisto river, prelim. chart,	"	1: 50,000	1851, '53, '56
St. Helena sound, prelim. chart,	"	1: 40,000	1857
Port Royal entrance and Beaufort harbor,	"	1: 60,000	1855
Sea-coast of S. C., from Cape Roman to Savannah river, prelim. chart,	"	1: 200,000	1856, '57
Savannah river entrance,	Ga.	1: 30,000	1851
Savannah city approaches,	"	1: 20,000	1851
Savannah river, prelim. chart,	"	1: 40,000	1855
Romerly marshes,		1: 10,000	1855
Doboy bar and inlet,		1: 40,000	1855
St. Simon's sound and Brunswick harbor, prelim. chart,		1: 40,000	1856, '57
St. Andrew's shoals,		1: 60,000	1850
St. Mary's bar and Fernandina harbor, prelim. chart,	Fla.	1: 20,000	1856, '57
St. Mary's bar and Fernandina harbor, comparative chart, (1843 and 1856),	"	1: 20,000	1856
St. John's river entrance, prelim. chart,	"	1: 25,000	1853
" " " comparative chart,	"	1: 10,000	1857
St. John's river, 2 sheets, prelim. chart,	"	1: 25,000	1856
Mosquito inlet,	"	1: 40,000	1851
Cape Cañaveral shoals,	"	1: 60,000	1850
Florida reefs, from Key Biscayne southward, prelim. chart,	"	1: 200,000	1855, '57
Positions and plan of beacons on Florida reefs,	"	1: 400,000	1855
Legaré anchorage, prelim. chart,	"	1: 20,000	1855, '57
Turtle harbor, Florida reef,	"	1: 40,000	1854
Coffin's Patches, Florida reef,	"	1: 20,000	1854
Key West harbor and approaches, prelim. chart,	"	1: 100,000	1851, '52
Tampa bay,	"	1: 120,000	1855
Waccasassa bay, prelim. chart,	"	1: 50,000	1856

LIST OF PUBLISHED COAST SURVEY PRELIMINARY CHARTS AND HYDROGRAPHIC SKETCHES.

Name of Chart or Sketch.	State.	Scale.	Year of publication.
Channel No. 4, Cedar keys,	Fla.	1: 30,000	1852
Cedar keys and approaches, prelim. chart,	"	1: 50,000	1854, '55
Ocilla river,	"	1: 20,000	1855
St. Mark's bar and channel,	"	1: 40,000	1852
" river, prelim. chart,	"	1: 30,000	1856
St. George's sound entrances,	"	1: 80,000	1853
Apalachicola entrance, prelim. chart,	"	1: 20,000	1857
St. Andrew's bay, prelim. chart,	"	1: 40,000	1855
Pensacola entrance and approaches, prelim. chart,	"	1: 30,000	1857
Sea-coast of part of Ala. and Miss., prelim. chart,		1: 200,000	1856, '57
Pascagoula river entrance,	Miss.	1: 20,000	1853
Horn island channel,	"	1: 100,000	1846
" " pass,	"	1: 40,000	1852, '53
Biloxi bay, prelim. chart,	"	1: 40,000	1855
Mississippi city harbor, prelim. chart,	"	1: 40,000	1857
Pass Christian harbor,	"	1: 40,000	1851
St. Louis bay and Shieldsboro' harbor, prelim. chart,	"	1: 30,000	1857
Grand island pass and Pearl river entrance, prelim. chart,	"	1: 40,000	1857
Delta of Mississippi, showing changes since 1839,	Louis.	1: 60,000	1851, '52
Lines of deep sea soundings in Gulf of Mexico, with profiles of bottom,		1:2400,000	1855, '56
Barataria bay entrance,		1: 30,000	1853
Pass Fourchon,	"	1: 10,000	1854
Timballier bay entrance, (Grand pass),	"	1: 20,000	1853
Ship island shoal, near Isle Demière, prelim. chart,	"	1: 80,000	1853
Vermillion bay and Calcasieu river entrances,	"	1: 40,000	1855
Sabine pass,		1: 40,000	1853
Galveston bay, prelim. chart,	Texas.	1: 200,000	1851, '52, '55
Sea-coast of Texas, from Galveston southward, prelim. chart,	"	1: 200,000	1856, '57
San Louis pass, prelim. chart,	"	1: 20,000	1853
Matagorda bay entrance, prelim. chart,	"	1: 40,000	1857
Aransas pass,	"	1: 20,000	1853
Rio Grande entrance,	"	1: 20,000	1854
Reconnaissance of Western coast, from Monterey to mouth of Columbia river, 1 sheet,	Cal. and Or.	1:7000,000	1850
Reconnaissance of Western coast, from Monterey to mouth of Columbia river, 3 sheets,	"	1:1000,000	1850, '51
Reconnaissance of Western coast, lower sheet, San Diego to San Francisco,	Cal.	1:1200,000	1852, '53
Reconnaissance of Western coast, middle sheet, San Francisco to Umpquah river,	Cal. and Or.	1:1200,000	1854
Reconnaissance of Western coast, upper sheet, Umpquah river to boundary,	Or. and Wash. T.	1:1200,000	1855
Cortez bank, off coast of California,		1: 10,000	1853
" " " " prelim. chart,		1: 80,000	1856
San Clemente island, harbor of refuge at south-east end,	Cal.	1: 20,000	1856
Catalina harbor,	"	1: 15,000	1852
San Pedro anchorage and vicinity of Santa Barbara,	"	1: 20,000	1855
Anacapa island,	"	1: 20,000	1854

LIST OF PUBLISHED COAST SURVEY PRELIMINARY CHARTS AND HYDROGRAPHIC SKETCHES.

Name of Chart or Sketch.	State.	Scale.	Year of publication.
Anacapa and east end of Santa Cruz island, -	Cal.	1: 30,000	1857
Prisoner's, Cuyler's and San Clemente harbor,	"	1: 20,000	1852
Santa Barbara mission and vicinity, - -	"	1: 20,000	1853
" " channel, eastern entrance, prelim. chart, - - - - - - - -	"	1: 80,000	1857
Santa Cruz, San Simeon, Coxo, and San Louis Obispo harbors, - - - - - - -	"	1: 20,000	1852
Point Conception, - - - - - -	"	1: 40,000	1851
Point Pinos, Monterey bay, - - - - -	"	1: 20,000	1851
Monterey bay, prelim. chart, - - - -	"	1: 60,000	1857
Santa Cruz and Año Nuevo harbors, - -	"	1: 40,000	1854
San Pedro harbor, - - - - - -	"	1: 30,000	1852
San Francisco bay, - - - - - -	"	1: 400,000	1851
Entrance to San Francisco bay, prelim. chart,	"	1: 50,000	1856
San Francisco city and vicinity, - - - -	"	1: 10,000	1853
South Farallon island, - - - - -	"	1: 5,000	1855
San Pablo bay, prelim. chart, - - - - -	"	1: 50,000	1856
Mare island straits, prelim. chart, - -	"	1: 30,000	1851, '57
San Antonio creek, prelim. chart, - - - -	"	1: 20,000	1857
Point Keyes and Drake's bay, - - - -	"	1: 40,000	1855
Shelter cove, Mendocino city, and Crescent city harbor, and Port Orford or Ewing harbor, -	Cal. and Or.	1: 20,000	1854
Humboldt bay, - - - - - - - -		1: 30,000	1851
Trinidad bay, - - - - - - - -		1: 20,000	1851
Umpquah river entrance, - - - - -	Or.	1: 20,000	1854
Mouth of Columbia river, - - - - -	"	1: 200,000	1850
" " " - - - - -	"	1: 40,000	1851
Cape Hancock, (or Disappointment), - -	Wash. Ter.	1: 20,000	1851
Shoalwater bay, - - - - - - -	"	1: 80,000	1853, '56
Reconnaissance from Gray's harbor to Admiralty inlet, - - - - - - - -	"	1: 600,000	1853
Grenville harbor, - - - - - - -	"	1: 20,000	1854
Cape Flattery and Neé-ah harbor, - - - -	"	1: 40,000	1853
False Dungeness harbor, - - - - -	"	1: 30,000	1853
New Dungeness harbor, - - - - -	"	1: 40,000	1856
Canal de Haro, Rosario strait, and approaches,	"	1: 200,000	1854
Port Townshend, - - - - - - - -	"	1: 40,000	1854
Duwamish bay and Seattle harbor, - -	"	1: 400,000	1854
Smith's or Blunt's island, - - - - -		1: 20,000	1854
Port Ludlow, - - - - - - - -	"	1: 20,000	1856
Port Gamble, - - - - - - - -	"	1: 20,000	1856
Olympia harbor, - - - - - - -	"	1: 20,000	1856
Steilacoom harbor, - - - - - - -	"	1: 30,000	1856
Bellingham Bay, - - - - - - -	"	1: 40,000	1856
Blakely harbor, - - - - - - - -	"	1: 10,000	1856

Discoveries and Developments of the Coast Survey.—Were this Committee to attempt to enumerate or to enter into a detailed specification of all the important contributions to nautical knowledge which the Survey has collected, or to point out all the seriously dangerous errors which it has succeeded in correcting, this branch of their subject would overshadow all the rest, and their report would degenerate into a mere catalogue of hydrographic discovery. Yet, in order that the reader may have the opportunity of informing himself, in some measure, in regard to matters which cannot conveniently be fully presented in this place, we shall add a list of the more important discoveries and developments, and if, in connection with this, we compare the ancient charts with those which have been, in later years, wrought out by the American Coast Survey, we may form some faint idea of its inestimable benefits to navigation. Let, for instance, the charts of the port of New York be examined. By far the most serviceable avenue to this most important of our harbors, the channel (Gedney's) made use of now by vessels of the largest class, was entirely unknown until it was developed in the systematic hydrography of the bay. Had the true depth of this channel been known in 1778, (then probably existing, as seen by comparing old and new charts,) the French fleet under Count d'Estaing might have passed into the bay, and taken the assembled British vessels. The gradual increase of Sandy Hook to the northward, narrowing the main ship-channel entrance, has been well established by the successive observations of the survey; its cause has been investigated, and the result gives encouragement in reference to the power to control this growth of the Hook, should it become necessary. Take, again, the approach to Philadelphia: until the Coast Survey corrected the error, the two light-houses which define the entrance to the Delaware were variously represented on the charts as from four and a half to seven miles more distant from each other than they are in fact. The great regulating landmark of our pilots, at Bombay Hook, was five miles out of place. The deepest and most sheltered channel in the widest part of the bay, was supposed to be almost a shoal. Take, again, the island of Nantucket, fringed round with a labyrinth of shoals, which seemed to defy all attempts at comprehension:—see it now all pictured out upon these beautiful charts in every minutest detail, like a great citadel with its outworks systematically disposed all around it. Look at the numerous isolated rocks, ledges, reefs, and shoals, on all parts of our far-extending coast-line, located with the utmost degree of precision.

Some of these individual facts—many or most of them, probably—have already been the means of saving many ships from wreck and total loss. There is no extravagance in the presumption, at least if we strike an average, that a single such service may fairly be ascribable, within the past year, to every one of these additions, to the amount of knowledge previously existing in regard to the hidden dangers or the treacherous currents of the ocean. Let this estimate, for a moment, be adopted; and let the value of ships and

their cargoes, small and great, richly and poorly laden, be put at so low an average as twenty thousand dollars; it will appear that we may fairly credit to the services of the Coast Survey an annual saving to the country of nearly three millions of dollars. If in this conclusion there is error, there can be little doubt that it is because the amount is put too low.

The recorded disasters to our marine commerce in 1855, reached still a total, in spite of all the increased security which the charts as far as completed have given to navigation, of almost twelve millions of dollars.

In view, therefore, of all these considerations, the Committee cannot but conclude, that, in so far as the direct objects are concerned for which the survey was instituted, the wisdom of the policy in which it originated is abundantly vindicated, and the largest expectations of benefit from its execution which its projectors professed to entertain, have been more than realized in the results already achieved.

List of the more remarkable discoveries and developments by the United States Coast Survey to the year 1858, *arranged in geographical order.*

Casco bay, Maine: determination of the position of a sunken rock, on which the steamer Daniel Webster struck, on October 13, 1856.

Gloucester harbor, Massachusetts: a rock (not on any chart) in the inner harbor, discovered in 1853.

Boston harbor: Broad sound channel thoroughly surveyed, 1848; several rocks in the fair channel way, 1854.

Massachusetts bay: Stellwagen's bank, an important mark for approaching the entrance, 1854; a dangerous sunken ledge (Davis' ledge) to the eastward of Minot's ledge, 1854; development of a reef between Minot's and Scituate light, 1856; a sunken rock, with only six feet at low water, off Marshfield, 1856; a dangerous rock, near Saquish Head, entrance to Plymouth harbor, 1856; three rocks, partly bare at low water, off Manomet point, determined in position, 1856; a very dangerous rock off Indian Hill, and four miles south of Manomet point, with only six feet water, 1856.

Nantucket shoals: Davis' New South shoals discovered, six miles south of the old Nantucket South shoals, and in the track of all vessels between New York and Europe, or from the eastern to the southern states, or to South America, 1846; two new shoals, 1847; six new shoals, the outermost fourteen and a half miles from land, and with only ten feet water, 1848; McBlair's shoals, 1849; Davis' bank, 1848; Fishing Rip, a large shoal, with four and a half fathoms, surveyed in 1852; a ridge connecting Davis' New South shoal and Davis' bank, 1853; a small bank or knoll, beyond the limits of the series of shoals, with only five fathoms on it, five miles east of Great Rip; two shoal spots, near the northern extremity of Davis' bank, with fourteen and eighteen feet water, 1856.

Nantucket sound: contraction of the inlet at the north end of Monomoy island, and opening of new entrance to Chatham harbor, 1853; Ed-

wards' shoal, south of Nantucket light-boat, 1855; two shoal spots, with twelve and thirteen feet water, 1856; survey of Muskeget channel, 1848 and 1850.

Numerous rocks in Martha's Vineyard sound, Long Island sound, and the various bays and harbors connected therewith.

The tides and tidal currents of Long Island sound, of Hudson river, and of the great bay between Massachusetts, Rhode Island, Connecticut, New York, and New Jersey, 1854 to 1857.

New York bay and harbor: Gedney's channel into New York bay, having two feet water more than the old channels; changes in New York harbor, between 1845 and 1858; increase of depth in Buttermilk channel, 1848; shoal in main ship channel, 1855.

Sandy Hook: its remarkable increase traced from the surveys of the topographical engineers and others, and by several successive special surveys made between 1844 and 1857.

Delaware bay: Blake's channel at the entrance, discovered in 1844, open when the eastern channel is closed by ice; Blunt's channel; changes near the Pea Patch.

Coast of Virginia: true extent and position of the dangerous shoals near Chincoteague inlet, 1852; Metonkin inlet, shoaling from eleven to eight feet in the channel, 1852; two channels into Wachapreague inlet, both with seven feet water at low tide, 1852; Great Machipungo inlet, a fine wide channel with eleven feet water on the bar at low ebb, and fourteen at high tide, with good anchorage inside in from two to eight fathoms, forming the best harbor between the Delaware and the Chesapeake, 1852.

Entrance to the Chesapeake: two shoals, one 4¾ nautical miles S. E. by E. from Smith's island light-house, with seventeen feet water upon it; the other E. by S. nearly 7¾ miles from the same light, with nineteen and a half feet, 1853; finding of only three feet water upon the "Inner Middle," the shoal part of the Middle Ground, west of the "North Channel," at the Chesapeake entrance, 1852.

Chesapeake bay: determination of shoals and bars at mouths of Great and Little Choptank, Rappahannock and Patapsco rivers, 1844 to 1855; New Point shoal, with only sixteen feet water, south-east from New Point Comfort light-house, 1854; advantages of York river as a harbor, 1857.

Gulf-stream: discovery of the cold wall, alternate warm and cold bands, and various other features; discovery of cold water at the bottom of the ocean below the Gulf-stream, along the coast of North and South Carolina, Georgia, and Florida, 1853; submarine range of hills, beyond the Gulf-stream, tracked from Cape Florida to Cape Lookout, 1855.

Various facts relative to the distribution of minute shells on the ocean bottom, of probable use to navigators for recognizing their positions.

Coast of North Carolina: dangerous nine feet shoal off Cape Hat-

teras, 1850; a new channel, with fourteen feet water, into Hatteras inlet, formed during 1852, which is better and straighter than the old channel; changes at Hatteras and Ocracoke inlets, 1857; general permanence in depth on the bar of Beaufort harbor, with the change of position of the channel, 1854; the well ascertained influence of prevailing winds in the movement of the bars at Cape Fear and New Inlet entrances; the shoaling of Cape Fear river bar thoroughly examined for purposes of improvement, 1852, and the changes in the bars and channels determined, 1855 and 1857; Frying Pan shoals, off Cape Fear, extending twenty nautical miles from Bald Head light-house, surveyed in 1851.

Coast of South Carolina: Maffit's new channel, Charleston harbor, with the same depth of water as the ship channel, 1850; changes in the channels of Charleston harbor, and in the entrances to North Edisto river and Port Royal harbor, 1852 to 1857.

Florida reefs: a harbor of refuge (Turtle harbor) to the northward and westward of Carysfort light-house, with a depth of water of twenty-six feet at the entrance, 1854; a new passage, with three fathoms water, across the reef, to Legaré harbor, under Triumph reef, (lat 25° 30′ N., long. 80° 03′ W.) which, if properly buoyed, will be valuable as a harbor of refuge; a safe rule for crossing the Florida reef near Indian Key, 1854; a new channel into Key West harbor, 1850; Isaac shoal, near Rebecca shoal, not laid down on any chart, 1852.

Mobile bay: in 1832, only seventeen feet at low water could be carried over the entrance bar; in 1841, it had nineteen feet, and in 1847, twenty feet and three quarters, as shown by successive surveys; diminution, almost closing, of the passage between Dauphine and Pelican islands, 1853.

Harbors on the coast of the Gulf of Mexico: determination of bars, shoals, and passes, and of the effect of wind in disturbing the tides.

Pacific coast of the United States: various surveys and charts of small harbors, and a continuous reconnaissance of the entire western coast and islands adjacent, a great part of which was imperfectly known, 1849 to 1857.

Coast of California: development of a bar at the entrance of San Diego bay, 1856; a shoal in San Diego bay, with only twelve and a half feet water, not on any chart, 1852; determination of the position and soundings on Cortez shoal, and of a point of rock thereon, 1853 and 1856; position of a rock off Point San Pedro, on which the steamer "Uncle Sam" struck, 1855; discovery of red sand in soundings, marking the entrance to the Golden Gate, 1855.

Columbia river: south channel surveyed and made available to commerce, 1851; changes of channels, their southward tendency, and a new three fathom channel from Cape Disappointment, due west, to open water, 1852; further changes, 1853:

Coast of Washington Territory: shoals and dangerous rocks de-

termined in position, in the Strait of Juan de Fuca, Canal de Haro and Rosario straits, 1853 to 1857.

Additional List for 1858, *of some of the more remarkable discoveries and developments.*

Coast of Maine: dangerous rocks off Boon island, Cape Neddick, and the mouth of York river, determined in position; development of Fishing ledge, Boon island ledge, and Duck island ledge; a detected rock two-thirds of a mile northward and eastward of York ledge.

Coast of New Hampshire: a very dangerous rock, with only six and a half feet water, off the entrance to Portsmouth harbor, about four nautical miles eastward from the Whale's Back light; a rock, with twelve feet at mean low water, about four miles and a third eastward of the Whale's Back.

Coast of Massachusetts: an extension of the sand spit to the southward of Sunken ledge, Boston harbor, since the survey of 1847.

Coast of Connecticut: Luddington rocks, determined in position, about ten yards apart, one mile and a half (nautical) S. W., by compass, from New Haven light-house.

Coast of New York: Tidal currents in East river, and surface and sub-currents investigated in New York harbor, the lower bay, and on the bar.

Charleston harbor: increase of depth developed in Maffit's channel.

Coast of Florida: a new and deeper channel discovered, leading into St. George's sound (Apalachicola), at the eastern end of Dog island, and anchorage connected with it; shoals near the East and West passes of St. George's sound, and a new channel found between St. George's and St. Vincent's islands.

Coast of California: Whiting's rock, determined in position, near "The Brothers," at the entrance of S. Pablo bay; a reef developed off the Contra Costa flats, San Francisco bay.

Washington Territory: a bank of three and a half fathoms, about a mile off the S. W. point of Lucia island, northern entrance of Washington sound.

Aid afforded to the Light-House System.—The survey of the coast furnishes also, as part of its direct results, this further and most valuable benefit to the navigator, in the indication of the most appropriate points upon which to establish lights, beacons, buoys, fog-bells, and whatever other constructions may be useful in giving assurance of safety, or indicating the possibility of danger.

For the judicious selection of sites for light-houses, it is necessary to be in possession not only of the hydrography along the coast, but also of the topography of the shore, and of the points which become landmarks in connection with the light-house. This information we have seen that the Coast Survey furnishes, and hence the determination of light-house sites seems to

be a part of its appropriate functions. Such has been the view of the subject taken by the government; and accordingly, in 1852, the construction and general disposition of the light-houses of the coast having been confided to a Board composed of officers of elevated rank in the army and navy, with two civilians selected for their high scientific attainments, the examination of suitable sites for these structures was assigned to the Superintendent of the Coast Survey. In the six years that have since elapsed, preliminary surveys or examinations have been made in more than one hundred localities on the Atlantic, Gulf and Pacific coasts of the United States, and at least half of the cases reported are based upon recommendations for aids to navigation suggested by the Assistants while surveying in the respective localities.

Aid afforded to the Planning of the Defence of the Coast.—The bearings of the Coast Survey on subjects connected with the defences of the coast, must be passed over by the Committee more briefly than their importance deserves. The eminent soldier at the head of the Engineer Corps of the Army, on whom the office of discussing them would have appropriately devolved, was on the eve of departure from the country when the preparation of this report was originally taken in hand. A few paragraphs from his letter to the late chairman, written a short time before his departure, must be accepted as the too succinct expression of his views:

"I cannot," he says, "refrain from urging you to insist emphatically upon the very important aid that has been rendered by the Coast Survey to the system of National Sea-coast Defences, and to the improvement and preservation of harbors. For many years the Engineer Department has had no other resource than the Coast Survey for the general information necessary for the determination of the sites of new fortifications. It has often been without other resources as to local topography and hydrography. It has been enabled, by this aid, greatly to expedite the construction of defensive works of the highest necessity: and I must not omit to add, that the operations of the Coast Survey have, on some occasions, by the kind consideration of the Superintendent, been specially arranged in the order of time, and in the manner, calculated soonest to supply our necessities. In relation to the improvement and preservation of harbors, it may be said, generally, that great as the function of exhibiting the coast in its present state may be, a not less important one is the detection of its disturbances: for only on the exact knowledge of these (already found by the labors of the Survey to be great and various, and often threatening), can any judicious precautions and remedies be founded. Under the feeling of these obligations to the Coast Survey, I can hardly keep from warming up into specification and amplification—for which, however, I have no time under the arrangements which are pressing on me."

Testimonials from the Mercantile Community to the Value of the Coast Survey.—Should we aim at conceiving a *definite* estimate of the

value of the contributions afforded by the Coast Survey to the development of the commerce, and thereby to the general prosperity of our country, we shall find the importance of these laboriously-gathered results so to grow upon our minds, as we consider them, as to baffle all attempts at computation.

The amount of wealth (and not less of human life) which they have saved from being ingulphed in the waves can never be known. The degree to which marine commerce, relieved by them of many of its perils, has been stimulated into higher activity through their influence, must be equally matter of conjecture: so that, in fact, the difficulty of forming any clear or adequate idea of these great benefits, grows mainly, at last, out of their very magnitude.

When men, like ourselves, whose life is spent upon the land, and whose occupations little familiarize them with the every-day operations of commerce, have their attention more particularly drawn to this subject, they may begin to feel by degrees its practical importance, and in some measure to realize the far-reaching consequences of the labors we are reviewing. But it is far otherwise with the merchants and the sea-faring men of the country. Truths which we recognize but occasionally, and by a special effort of the attention, are their daily and familiar thoughts; and thus, whenever an uttered opinion in regard to the operations of the Coast Survey has been heard from such a source, it has invariably been an emphatic testimony to their value.

Thus, the Insurance Companies of *Boston* aver, that "being constantly concerned in the security of the navigation of our own shores, and having watched with interest the condition and progress of the Coast Survey," they "are satisfied that every year it is rendering very valuable service to the commerce of the country by its accurate charts and by its important discoveries;" and they express their conviction that "the present organization of the Survey is better suited than any other to insure the prosperity of this great national work, and to provide the best judgment in directing its plans of operation, and the greatest skill and fidelity in their execution."

The Chamber of Commerce of *New York* exult in the "energy peculiar to our country" with which the work has been prosecuted, "surpassing that of any other country at any time;" and protest that its "continued prosecution is due not only to the interests of our merchants, but as an act of simple though tardy justice to the seafaring classes of the United States."

The Board of Trade of *Philadelphia* refer to the rapidity and economy with which the Survey has been conducted, and to the value of its publications to the merchant, mariner and underwriter, and declare that they should view its "abandonment, or any limitation upon its present extent and plan, as a public injury."

The underwriters, merchants and masters of vessels of *Baltimore* speak

of the "various discoveries of new channels, new shoals, and other important data on which correct sailing directions are founded," as "of great value in the navigation of our coast and harbors."

The Chamber of Commerce of *Charleston* "considers this work as of more importance to Charleston than any work that the General Government has ever undertaken for it."

The *Savannah* Chamber of Commerce, considering it "matter of great interest to the people of Georgia that the work which has been for some time past going on in the survey of our coast should be prosecuted with vigor," resolved that their senators and representatives be "respectfully requested to aid the grant of the necessary appropriation."

A meeting of citizens of *Mobile* "cordially recommend to the favorable notice and action of Congress the continuation of an energetic and active prosecution of the Coast Survey, as a work of the greatest utility to the various interests of the Union, and calculated to reflect honor upon the intelligence and patriotism of this country," and that their thanks be "tendered to Professor Bache and the officers under his direction, for the zeal and success with which their duties have been performed in the bay and harbor of Mobile."

Still more recently than the before quoted testimonial from New York, appears a memorial signed by the most influential merchants, ship-owners and underwriters of that port, who, "believing that the means of safety are increased by the vigorous prosecution of the United States Coast Survey, from its continually developing new dangers, and locating them so that they may be avoided, do respectfully ask that the Secretary of the Treasury may urge upon Congress the necessity of increased appropriations for the purpose of bringing the work to a more speedy completion." Also appears a memorial addressed to the present Honorable Secretary of the Treasury, and signed by underwriters, merchants, traders, manufacturers, mechanics and business men of Philadelphia, who state that they "have for many years witnessed the satisfactory progress of the survey of the coast of the United States," and that "this great work has already proved of eminent advantage to the commerce and navigation of the whole country, by adding to the safety of life and property," and that, "believing that the benefits to be derived from the active and extended prosecution of the Coast Survey are of a character to reflect honor upon the administration which cherishes and supports it, and that we should fail as a people in our duty to the world by neglecting to acquire the most accurate knowledge of the dangers that lie upon our extended line of sea-coast and harbors," they "most respectfully ask the support of the Coast Survey in" the Secretary's "annual report, and the recommendation of ample appropriations for its use."

Sea-coast Changes.—A careful examination of the list of discoveries above given will bring to view a fact which, to a person unfamiliar with this subject, may occasion considerable surprise. More than one in ten of the dis-

coveries of the Coast Survey are discoveries of changes in the ocean's bed; not only among shoals at sea, but also within some of our most frequented harbors, and in the channels by which they are approached. Similar changes occasionally occur, also, even in the configuration of the visible coast line itself. This consideration is sufficient to show that the hydrographic part of this great work cannot, like the geodesic, be, once for all, completed; but that, in order to maintain permanently in the charts the same degree of accuracy which is originally given to them, the soundings must, from time to time, be revised, and all the changes of depth discovered, carefully noted.

Tides and Currents.—Another fact, which the attentive study of the same catalogue discloses, is, that an acquaintance with the ocean currents, and with the irregularities of the tides, is of almost as much importance to the mariner as a knowledge of the depth of the water, or of the form and character of the bottom. These things, and, in addition to them, the magnetic elements, are, in some cases, for the sake of greater clearness, given in separate charts. The present Superintendent of the Coast Survey has devoted earnest attention to all the subjects of this class; and he is especially developing the complicated laws which govern the tides on our coast, in a comprehensive and masterly manner. The preliminary chart of cotidal lines on the Atlantic coast, and the tide-tables constructed from the observations of the survey, have been already incorporated into Blunt's "Coast Pilot;" for, although the whole investigation is still in progress, and is necessarily, by its nature, far from its completion, important practical results have been developed which have been immediately put within the reach of the navigator. Preliminary charts of *tidal currents* have also been prepared for various localities at the office of the survey.

Practically valuable, however, as is the investigation of this difficult subject, which, in the present able hands, is proceeding so successfully, it is of the highest interest also in a purely scientific point of view. The problem is one of the few that belong to the globe as a whole; and to us, as possessing a territory which borders on the two great oceans, the solution of the problem appears to be more especially committed than to any other civilized nation.

The subjects here touched upon, sea-coast changes, tides and currents, while, in their practical bearings, as they affect the interests of commerce, they present no aspect which cannot be equally comprehended by every mind, have yet a higher significancy and stand in a broader relation to the physical history of the globe than is likely to occur to any but those who have made the operations of nature, as they are constantly proceeding on the largest scale over the whole surface of our planet, the subject of long-continued and careful study. The opinions of such men, in regard to the value of observations like those which have just been occupying us, are of much more than ordinary interest; and, on this account, the following, from a member of this Committee, whose life has been devoted to labors which

make him a high authority upon all matters of this description, is given in his own words:

"The observations on the action of tidal and river agencies, in changing the form, depths, and entrances of harbors, are of well-known importance. These changes are so perpetually in progress, and in time become so disastrous to navigation, that a corps charged with the duty of surveying the coast, and mapping out the annual variations of sand-banks, headlands, and channels, is part of the necessary organization of a well-ordered government. But beyond this, the Coast Survey, as at present conducted by Prof. A. D. Bache, is furnishing—in addition to the most exact determination of all the features of harbors, and the special causes of change operating in each, with the progressive variations in the action of these causes themselves—that comprehensive survey of the whole continental coast, and the movements of the bordering ocean, which is essential, in order to arrive at the general principles governing tidal operations and coast changes. It is mapping out the whole grand subject of the Atlantic tides so completely, that the special details of each bay and inlet are taking their true places in the system; and subordinate to these, also, the movements and counter-movements in harbors, which occasion their changes in depth and outline. The questions that must often come up respecting the improvements of harbors, or their protection from encroaching silt or sand, are thus receiving thorough solution by reference to the widest and most fundamental principles."

The Committee here perceive that they are approaching the limit at which the practical becomes blended with the scientific; and while those results of the survey which remain to be examined are by no means deficient in value, nor often even in a value eminently practical, yet, since they cannot properly be classed among the explicit objects in view of which the work was originally instituted, their consideration appears most fittingly to fall under the head of *Collateral Results.*

COLLATERAL RESULTS:—ADDITIONS TO THE AMOUNT OF SCIENTIFIC OR USEFUL KNOWLEDGE.

Contributions to Geological Knowledge.—All observation conspires to instruct us that the surface of our earth, under the action of the elements, is undergoing continual changes; and that the relation existing between land and sea is in a state of incessant oscillation. What the Coast Survey has disclosed to us, by its severely exact methods of scrutiny, of the mutual and steadily progressive encroachments of the water and the land, along the entire extent of our own ocean border; that, also, successive generations of men, observing without method, have, in the lapse of centuries, been compelled to recognize, as a law of universal prevalence, wherever, throughout the globe, these contending elements come into contact; and that, too, many facts of recorded history attest, in instances in which the tooth of

time has so completely obliterated all natural traces of the former state of things, that, but for the existence of the record, not a suspicion of change could ever have been entertained. That, also, many imposing monuments of ancient art, colossal mementoes of forgotten centuries, once towering sublimely above the pigmy dwellings of their builders, but now half-buried in encroaching sand, avouch in solemn silence to the curious wanderer of the desert: while other ruins, no less interesting, tottering on the margin of the sea, reveal the same truth in the deep-worn evidences, which they bear far up among their crumbling sculptures, of former watery violence; and in the still more wasting ravages of the lithodomous mollusks which burrowed in their substance when the waters, which vainly lash their foundations to-day, enveloped them, in some unknown period of the past, half-way up to their elaborately wrought capitals. That, also, islands upheaved above the ocean's surface within the period of authentic history, or cities, within the same period, submerged beneath its waves—extended lines of coast which the paroxysmal throes of volcanic energy have suddenly elevated many feet above their former level, or as suddenly depressed below,—or which the steady and long continued progress of secular change has lifted or submerged more slowly; that, also, the growth or wasting of the shores under our own eyes, in numberless localities where no change of the general level is perceptible; that, also, the rounded and water-worn forms of the pebbles which lie imbedded, in countless multitude, in the superficial strata of every continent,—and the vast deposits of marine organisms which crown the very mountain-tops with evidences of once swarming primeval life; that, in short, an almost endless series of unequivocal and most convincing indications proclaim, in modes as various as the mute witnesses themselves, but with a harmony of testimony as irresistible as it is impressive.

Considerations like these invest the researches of the Coast Survey with that species of fascinating interest which attaches to mystery, and impart to them a portion of the dignity which belongs to those grand operations of nature, whose laws they assist us to unveil. This noble work is gathering for us the statistics of secular progress; and it is no idle imagining to suppose that, out of its systematized results, and those of other equally searching investigations already in progress, or hereafter to be instituted in other lands, science may yet be able to unfold to us all the wonderful history of those stupendous revolutions which have marked the past, and all the inevitable transformations which still impend over the unknown future of our globe. Upon the point here presented, the Committee take the liberty to quote once more the language of the eminent authority already introduced.

"*Geology is gathering much from the results of the Coast Survey.* The rocks of the globe have been formed, to a great extent, through tidal and current action, many of them having been accumulated, just as sand and mud deposits are now accumulating along and off the shore from New

Jersey south, or as deltas are forming about the mouths of rivers. The operations of the present day thus explain those of the earth's past history. Science is hence deriving from the researches of the Coast Survey, facts elucidating the whole series of geological formations. The surveys of the delta and mouths of the Mississippi, of the harbors of Mobile and Charleston, of Delaware river and bay, of New York and other bays and harbors, are all subjects for profound study with those who would understand this great branch of geological dynamics; and they look for other important data from the future surveys, that shall exhibit the changes that are now in progress, and the rate at which they are going forward.

"Besides investigating the origin of sea-shore deposits, and the causes of their varying features, soundings off the coast and in the deeper waters are making the sea-bottom a part of *terra cognita*, disclosing the positions of its valleys and plains and the character of its slopes, and marking out the true limit between the continental areas and the great oceanic depressions. The coast Survey is thus enabling the geologist to extend the area of research, compare the causes and characters of submarine ridges with those of the sub-aërial, and trace the directions of river channels over the sea-bottom off their mouths.

"By its registers of depth, it is also preparing to detect evidences of variation of level along the border of the continent; or evidences of stability, as the case may be: and this is becoming a subject of practical importance. Suspicions have been thrown out respecting a slowly-progressive subsidence along the coast of New Jersey, which, if sustained by a thorough examination of the facts, suggest a new topic for serious consideration to all interested in New York commerce. Whether true or not, the point requires examination for every part of the coast of the United States; and this examination it has begun to have, in the accurate system of soundings and measurements of the Coast Survey.

"Along the coast of southern Florida, the subject of coral reefs comes under the attention of the Survey; and in investigating the forms and formation of coral-reef harbors, like that of Key West, their rate of filling up, or the influence of currents in keeping them open, geology is receiving other important contributions from the facts which its operations are disclosing.

"It may finally be observed, that the study of the material brought up by the lead, in the prosecution of the deep-sea soundings, is making some remarkable revelations with regard to the distribution of animal life; and that thus zoölogy and the geography of life are deriving much from the investigations in progress.

"All these scientific contributions are collateral results, incidental to the great purpose of the survey—results attained, not through independent researches needlessly introduced, but because they are of necessity involved in the prosecution of the great purpose itself, and thus constitute a part of

the evidence demonstrating the strict fidelity and profound ability with which it is carried out. They flow from the work as its entirely legitimate fruits, and take their place, of unquestionable right, alongside of those other fruits whose legitimacy is universally recognized, and in which humanity, as well as commerce, is so deeply concerned."

As somewhat more specifically illustrative of the nature of the interesting inquiries connected with this subject, which the Coast Survey is solving, or will yet be able to solve, the committee venture to quote, in addition to the foregoing, the subjoined passage from a communication obligingly furnished by another geologist, standing deservedly high among the scientific men of the country:

"The Mississippi river," observes this gentleman, "presents, perhaps, the most magnificent example in the world of a large river discharging abundant sediment into an almost tideless sea. In the Gulf of Mexico, therefore, we have the best opportunities of studying the phenomena of river deposit. The distribution of the various kinds of sediment brought down by the great river, the slope of the submarine bank, destined to be gradually transformed into delta and added to our territory—these would be problems worthy, in themselves alone, of the attention of an enlightened government. And these important problems have not escaped the attention of the accomplished superintendent; as may be seen in the report for 1856, map No. 40, where the distribution of sand, mud and coral-mud is carefully laid down. But there are several points of interest which deserve further attention: It will be seen, by reference to the map just mentioned, that the lines of equal depth approach each other near the mouth of the Mississippi, showing that the submarine bank formed by the deposit of this river has a very rapid slope toward the south. Near the mouth of the river runs the line of six fathoms; about ten miles south, the line of fifty fathoms; and from this point the bottom slopes so rapidly that, at the distance of three or four miles more, a line of two hundred and thirty-six fathoms found no bottom, making a difference of nearly eleven hundred feet in this short distance. Thus we have *a considerable inclination of strata* over large areas, produced by the *natural agency of water alone.* It is possible, however, that the steepness of the slope may be, in part, due to the existence of currents (*e. g.* Gulf-stream,) sweeping across the mouth of this river at some distance, and carrying away sediment which would otherwise be deposited further out. It is important to ascertain how far this southward slope is modified by the existence of any such current.

"The same map shows that, on the Gulf side of the peninsula of Florida, the coral bottom (probably coral mud) extends as far north as Tampa bay. It would be extremely interesting to determine whether there is any return current carrying coral mud from the southern point and keys of Florida, northward, or whether, as is much more probable, we have here additional evidence of the fact that the coral formation of the

peninsula extends northward as far as Tampa. It will be recollected that, according to Tuomey, the *eocene* may be traced as far south as this point. It would be important to trace, in a similar manner, the coral deposit on the east side of the peninsula as far as possible."

Were it thought indispensable in this report to pursue a method severely logical, it would be proper here to complete whatever remains to be said in regard to the aid which the survey of the coast is rendering to geological science. Inasmuch, however, as the formation of submarine strata depends, as we have seen, in great measure upon the distribution of sedimentary matter through the agency of currents, and inasmuch as the greatest of all the currents in our waters, or indeed in the waters of any known sea, has been a subject of special study and elaborate exploration, under the direction of the superintendent of the Coast Survey, it has seemed convenient to defer the consideration of the relations of that great stream to geology until some account shall have been given of the character of the observations made upon the stream itself, and of the results which those observations have gathered.

Exploration of the Gulf-stream.—The observations made in the progress of the survey of the coast, with regard to the currents of the ocean, and particularly with regard to the Gulf-stream and Labrador current, are in point of importance not inferior to those made on the tides. The oceanic currents embrace completely the whole globe, and follow as regularly an established system in their movements as the blood circulating in a living being. This, therefore, in its most general aspects, is one of those world-wide subjects which nations should undertake to investigate; but, in the actual discharge of the duty thus resting on them, it is fitting that each nation should explore, with special attention, the seas that wash its own shores. To ourselves, whatever relates to the Gulf-stream possesses a paramount interest, since every vessel which approaches our Atlantic coast from abroad is compelled to cross this great river in the sea. In the exploration of the stream which the Coast Survey has undertaken, the velocity and direction of the current at all points are, of course, primarily noted; but especially is the temperature of the water made a subject of very careful study in all parts of the stream. The distribution of temperature in the axis of the stream, at different depths, and in sections at right angles to the axis, has been diligently investigated, and is exhibited, so far as it has been hitherto ascertained, in preliminary charts. The investigation embraces, also, the *position* of the axis of the stream at different seasons of the year, with the variations in its breadth, the changes in the distribution of temperatures at different seasons, and the connection of the figure of the bottom with this distribution; also, the characteristics of the inner cold current making in a direction opposite to that of the Gulf-stream; all of which points are materially interesting, not only to general science, but to practical navigation. With the aid of the perfected map of this stream,

and of its attendant counter-current, such as the survey will eventually bring forth from its accumulating materials, the navigator approaching our coast will obtain most important indications of his position. The color of the water itself will be one of these; but a more interesting one will be found by merely consulting the temperature of the sea, extending the observations to different depths below the surface, as well noting the superficial temperature. Thus the remarkable and sudden change of temperature which occurs along the inner edge of the current, the warm water of the Gulf-stream being confined as it were by a "cold wall" of water (a term happily applied to it by Lieut. G. M. Bache) is a valuable practical guide; yet, in order that it may be a safe one, the laws which govern the position of the "cold wall" at different seasons, must yet be carefully determined. This, and various matters of interest still unsettled or obscure, can be properly developed only by a series of observations, extending over a number of years. The Coast Survey is, in fact, now supplying what Humboldt, so long ago as the year 1804, clearly set forth as important desiderata in relation to the Gulf-stream—a subject to which he had devoted much careful attention. [Personal Narrative, &c., chap. i.]

We may, at this point, with propriety resume the subject, deferred in the discussion of the topic last considered, of the relations of the Gulf-stream to the submarine deposits heretofore formed, or still in process of formation, upon our shores and beneath the waters of the neighboring seas. The formation of shore deposits, whether in tideless or in tidal seas, has been investigated to some extent elsewhere, particularly under the direction of the English government, in the British seas and the German ocean; but of the deposits of Oceanic currents in deep seas, we know nothing but what has been revealed by the Coast Survey.

One of the most important contributions by which American geology has ever been enriched, is the discovery made by Agassiz, under the direction of the Survey, that the peninsula of Florida is of recent origin; that it has been formed, in fact, by the growth of successive coral reefs, one outside of the other, from north to south; and that this progressive growth is still slowly proceeding. It is, however, the plausible suggestion of Prof. Joseph Le Conte, that, in order to furnish a foundation on which the corals might build, it is necessary that some previously acting cause should be taken into the account; inasmuch as probabilities favor the supposition that the water in which the present reefs are found has been, at a former period, too deep for the operations of these polyps. Such a cause he finds in the great stream we are considering. The waters of this stream, emerging from the Gulf of Mexico highly charged with sediment, and sweeping in a curve around the point of Florida, must, in his view, according to the laws of current action, have deposited a portion of their suspended matter within the curve. And thus, as he supposes, a submarine bank has been progressively formed, extending slowly southward, upon which the distinct reefs pointed out by

Agassiz have been successively built. Whether or not this theoretic view is correct, is a point in regard to which geologists will look with interest to the investigations of the Coast Survey to determine.

Another interesting class of facts, associating itself naturally with the explorations of the Survey, is that which relates to the agency of the Gulf-stream in determining deposits in the open ocean. The velocity of this powerful current, as it rushes through the straits of Florida, is not less than five miles an hour; and with this great velocity it emerges to the northward into a wider sea. It is a property of currents, in such cases, to form an eddy on either side: and if the stream bear sediment, a bank is the necessary consequence. A notable instance of this is seen in the tidal current which rushes through the British channel into the German ocean, forming eddies which have resulted in the production of submarine banks. The Bahama banks lie east of Florida, separated from that peninsula by the Gulf-stream, and just in the position in which the existence of the stream would naturally lead us to look for such deposits. Upon these banks, also, coral reefs and keys have been formed. It is highly desirable that they should be further examined with reference to this point, and it is to be hoped that the operations of the survey may be so extended as to cover them.

The very remarkable configuration of the sea-bottom in and about the Gulf-stream, which has been so beautifully brought out by means of sections in the Coast Survey report of 1853 (maps No. 15 and 16) is a fact of great importance in a geological point of view. Commencing from the coast, the sea-bottom deepens very gradually, so that, at the distance of fifty miles, only the depth of twenty fathoms is attained. From this point, the bottom slopes rapidly down to very great depths. Thus the Gulf-stream runs like a river which has overflowed its banks. Now this submarine river-bank exists all along the coast side of the Gulf-stream. It is upon the margin of this bank that the coral reefs of Florida have probably grown. The bank may have been produced everywhere, by deposit from the Gulf-stream; or it may be true that its formation has been the result of sediment from all the Atlantic rivers, deposited for a certain distance off shore, and then, as it were, cut off and carried away by the current of the stream. Both causes have, not improbably, been concerned in producing the observed effect; but the question is one which cannot be regarded as settled, and one on which the Coast Survey will yet probably shed much additional light.

The sections already spoken of, in addition to the lateral bank just mentioned, reveal the existence of enormous ridges and correspondingly profound hollows, running in the direction of the stream, and therefore nearly parallel to the coast. The stream is, moreover, divided longitudinally into several alternating bands of warm and cold water; the bands of warm water corresponding to the hollows, and those of cold water to the

ridges. These bands and corresponding hollows and ridges commence at Cape Canaveral, and extend to a great distance; becoming, however, more indistinct as we go further northward. One of the cold bands runs along the lateral bank, and is that which has been already mentioned under the name of the "cold wall" of the Gulf-stream. In this, a slight return current has been detected; but whether or not the current is permanent, is a question yet to be definitely settled.

Now the origin or occasion of these cold bands is a question of the highest interest. It may be inquired, are they bands of Atlantic water, alternating with the water of the Gulf, or are they the cold water of a return polar current, deep-seated generally, but rising somewhat nearer the surface along these lines? It is very important, in view of these questions, that the *direction* of the current of the cold bands should be determined, and, if the warm and cold waters tend in the same direction, that their *relative* velocity should be ascertained.

It is, again, a question of no less interest than the foregoing, to what cause we are to suppose the alternating ridges and hollows to be due. Possibly they are mountain ranges, with their corresponding longitudinal valleys; constituting, thus, a submarine system parallel to the Appalachian chain. Possibly they are only lines of sedimentary deposit, determined by the existence of the cold bands of comparatively still water, or perhaps even of return currents. If the latter supposition be correct, then the ridges should decrease in height as we go north; for the sedimentary matter must sink, as it is borne further, to a lower and lower level. And even if the former be the true supposition—that is to say, if these elevated ridges are mountain chains of igneous origin—it is still possible that they may have undergone great modifications of form, from the subsidence upon them of the matters held in suspension by the waters of the Gulf-stream.

The currents of the ocean suggest, by natural association, the movements of the more subtle medium above it—movements no less important to the navigator than those of the ocean itself, since the question of his safety is often dependent upon the degree to which they may be favorable or adverse. On this subject the Coast Survey has already accumulated much valuable information; and in its further progress it will unquestionably gather much more. It is, therefore, one which may appropriately claim the next place in this review.

Contributions to Meteorological Knowledge.—It is obvious that a correct knowledge of the force and prevailing direction of the winds in different seasons of the year, especially in the vicinity of harbors, must be of the highest importance, not only to the safety of vessels and their cargoes, but to the security of human life. The physical causes which give rise to the great general atmospheric currents may be considered as satisfactorily established; but the influence of local causes in modifying these currents is yet very imperfectly understood. It is well known that the direction of

mountain chains and river valleys frequently determines the course of the prevailing winds. This is strikingly exhibited in various places on this continent, and especially in the valley of the Hudson and Mohawk. And the analogous conditions which every line of coast presents, lead to the necessary conclusion that such modifications of atmospheric currents must be produced by them *near the land*, which must either be very serviceable or very dangerous to the navigator, according to the state of his information.

Observations bearing on this question have been incidentally made, in connection with the tidal observations of the Coast Survey, under the judicious guidance of the superintendent; and these are sufficient to throw some light on the laws which regulate the winds at certain points along our coast. At Fort Morgan, at Mobile point, and at Cat island light-house, near the entrance to Lake Borgne, the observations have given evidence of local peculiarities, at once interesting to science and important to navigation, distinguishing the winds which prevail in this part of the Gulf of Mexico. The remarkable frequency of north winds at this point, and the absence of west winds, so strikingly brought out in the graphic delineations of the superintendent, are probably in a measure due to the influence of land.

The effect of the winds, according to their varying force and direction, upon the level of the water in harbors and inlets, is another interesting result incidentally developed by the Survey, in connection with the investigation of the tides. The discussion of the observations made during the hydrographical survey of Albemarle sound, clearly indicates the influence of the wind on the height of the water, and has furnished the means of tracing several anomalous effects up to their true causes. A similar discussion of the influence of the wind on the tides in Cat island harbor, on the Gulf coast, leads to the same general conclusions, with differences in the numerical details, which are of high scientific interest. The observations conducted for some years past at Key West, Fort Morgan, and Galveston, and a careful investigation of the winds of the Gulf coast, made for purposes of navigation, and as determining the working season of the Coast Survey, have already led the superintendent to many valuable deductions; and it is highly desirable that similar observations should be made at every point commercially prominent along our ocean border. Such researches have an obvious bearing on the safety of navigation; and those which relate to the effects of winds on the waters of harbors and inlets are absolutely indispensable, in order to secure the necessary accuracy in the hydrography of the coast.

Other questions connected with atmospheric influences which the Survey may yet clear up, can be but hinted at. Such are, for instance, the effects of rain or drought upon the height of the water in these harbors, inlets and bays which receive the waters of extensive hydrographic basins, and the inquiry, how far the mean level of the ocean is affected at any given place by the pressure of the atmosphere upon its surface.

CONTRIBUTIONS TO OUR KNOWLEDGE OF TERRESTRIAL MAGNETISM.—Ever since the directive property of the magnetic needle became known, that little instrument has been regarded as an indispensable part of the outfit of every vessel navigating the seas. Its utility to the voyager is of so universal notoriety, that no argument is necessary to prove the value of any species of research whose result is either to add to the sensitiveness of the instrument itself, or to perfect that knowledge of the earth's magnetic influences which is essential in order that its indications may be practically truthful or trustworthy. The use of the compass is to denote to the mariner the position of his meridian; but the needle itself very rarely coïncides in direction with the meridian. What, therefore, the mariner must know, if he would not be misled by the very guide in whose infallibility he often for days together implicitly trusts, is the exact amount, in angular measurement, by which the visible indication of his instrument is fallacious.

Now, the magnetic meridian is, of course, laid down upon the charts. But this meridian is not fixed. Its position on the chart is true only for the time when the chart is constructed; or rather, for the time when the observations upon which it rests are made. It is therefore an important problem to determine, if possible, by what *law of change* the position of this meridian is affected, at every point of the coast. But it is entirely evident that this can be done only by comparing observations regularly made during a long period. It can be done, in short, in no other way but by that species of patient, and laborious, and protracted observation, carried on simultaneously at a large number of scattered stations, which, in the earlier part of this report, has been described as the method which the superintendent of the Coast Survey, with all that ability and knowledge of terrestrial magnetism for which he is distinguished, is actually pursuing. These observations are not, of necessity, confined to the immediate coast. It is, on the contrary, desirable, and even requisite, that they should be extended into the interior of the country, in order to develope the curves of equal declination (*isogonic lines*), or those, in other words, upon which the variation of the compass is the same. The determination of these curves by observation at sea, with the precision requisite for the development of the laws of change, is almost if not quite impossible; but from the curves on land, extended beyond the coast, all that can be desired will be finally attained. What has been thus far done is exhibited in valuable preliminary charts. It is hardly necessary to observe that the collateral investigation of the magnetic inclination, or dip, and of the intensity of the magnetic force, constituting, indeed, an essential rather than a collateral part of any investigation relating to terrestrial magnetism, have been prosecuted *pari passu* with that of the declination.

The results thus gathered possess a double value; for while, to the mariner, they associate themselves with questions which involve his personal safety every day and every hour, to the philosopher who devotes

himself to the study of nature in her mysteriously varied manifestations of force, they possess a curious interest which grows with the aliment it gathers, and sustains his zeal in quest of clearer light, under all the oppressive labor of observations multiplied without limit, and of reductions indescribably tedious.

But there is another species of importance attaching to the results elicited by the investigations we are considering, which recommends them to the attention and favor of citizens of every class. It has already been intimated that the direction of the magnetic needle is not only in general not due north, but that it is widely diverse in different localities, and never constant in the same locality. Near our extreme north-eastern boundary, for example, the deviation is at this time fifteen degrees to the west of north, while on the borders of the Pacific ocean it is no less than twenty-one degrees to the east of north. Between these limits it has every intermediate value. Now, were this state of things permanent, we might accommodate ourselves to the diversity, wide as it is; and when once the actual variation had been ascertained for every locality, no further inconvenience need be experienced. In the early history of this science, and before the fact had been detected to what an extent the declination of the needle is subject to change, it was regarded by the British Government as a matter of so high importance to ascertain the true amount of the declination in every part of the world, that the celebrated Halley was sent out in command of a government vessel, to circumnavigate the globe at the public expense, in order that he might gather materials for the construction of a magnetic map of the world. His mission was faithfully accomplished, and the required work was executed in a manner worthy of all praise; but hardly had his map been given to the world before the steadily progressive natural changes of the earth's magnetic forces had vitiated all its indications, and rendered it, for the purposes intended, practically useless.

Now the manner in which these changes affect landsmen will require no explanation, when it is recalled to memory that all the boundaries of landed property are run out by the help of the magnetic needle. But the line which bore due north, by compass, or bore in any other specific direction, twenty years ago, or ten years, or even one, varies from that direction at present very considerably. When, therefore, a not very well informed surveyor (and there are a good many such in the country,) attempts to use these former bearings to fix the line-fences of a farm, he runs out a *new* piece of land, of precisely the same size and shape as the original tract, but with no single one of its boundaries coinciding with the original lines; so that the new piece of ground thus laid out overlaps the neighboring farm on the one side, and leaves a gore between it and the neighbor on the other side. Then comes litigation in its most perplexing form. But these embarrassments will be removed, for all future time, from all places included within the range to which the magnetic observations of the Coast Survey may

extend. The Survey not only gives the actual variation at definite dates, but, by a beautiful application of mathematical principles, involving most abstruse considerations, it has deduced the *law* which governs the changes, and made it possible accurately to predict their future, and to reveal their past.

The Coast Survey reports for 1855 and 1856 contain tables of magnetic observations and charts of the magnetic declination, dip and intensity, in which the information thus far collected is presented in very perspicuous form. Discussions of the law of secular variation, with diagrams illustrative of the same, are also given there.

The *true bearings* between the Coast Survey stations being known, and published in the lists of Geographical positions (C. S. reports for 1851–53–55–57), it is a very simple matter for a surveyor, living in the vicinity of such stations, to ascertain the variation of his compass at any time, by observing the *compass bearing* of a line between such stations. In many instances the assistants in the Coast Survey have also planted *meridian marks*, at the request of local authorities, to facilitate the ascertainment of the variation of the needle.

Bearing on Geodetic Surveys of the States.—It has been seen that the ordinary methods of surveying are unsuited to the work of delineating the boundaries and territories of a state. In fact, that which is called a state map in our country is rarely more than a forced combination of county maps, these made up in turn from the surveys of townships, or else determined by arbitrary guess-work. It is obvious that the townships, however accurately surveyed by compass and chain, can never be represented truly on the composite map of a county; and that the maps of counties so made up cannot be brought together so as to exhibit a correct view of the state. If the surveyor has assumed a southern angle as his point of departure, each northern line will be too long; and if his survey has begun at the northern extremity, all his southern lines will be too short. Errors similar in their result will attend the running of eastern and western boundaries; and at last, with all these errors, both of latitude and longitude, the lines of the survey must be cut down or extended, to bring them into some semblance of relation with the equally erroneous lines of the divisions which are to surround it on the map.

It is within the knowledge of almost every land-surveyor in the older states, that the surveys under which titles were made from the first proprietors almost invariably overlap each other, or leave vacant gores and quadrangles between them. Nor has this wholly resulted from the changing variation of the compass, though we have seen that that cause may easily produce the effect; but from fundamental error in the principle on which common field surveying rests—error which rapidly opens out, as the area surveyed is enlarged. So notorious and general are, or have been, these conflicts of title, that courts have long since held that wherever natural,

or even artificial landmarks can be found, the angles and lines of the record are to give place to them. Let any one compare the modern trace of a railroad with a map of the state which it traverses, and he will find that neither the bearings nor the distances agree. Let him undertake to measure the farms which are contained within any one of the measured triangles of the Coast Survey, or, if he prefer it, within the local map of his own township, and he must not be surprised to find—for he assuredly will—that the whole is either greater or less than the sum of the parts.

In older countries more than in our own, yet quite enough even among us, this has been recognized as a serious evil, embarrassing titles, inviting litigation, and, in so far as such causes are operative, discouraging and impeding agricultural progress. The result abroad has been, that the government has assumed the burthen of ascertaining for every man the true boundaries of his landed possessions. The geodetic map of France marks down the lines of every farm as definitely as it does the site of a light-house, or the course of a stream. The ordnance maps of England are some of them on a minor scale; but their tracings are almost equally minute: while the more recent surveys of Scotland and Ireland are expanded to the proportion of an inch to the acre, and note even the minor subdivisions of fields and messuages—a scale not too large, where the revenues of government are derived in part from a tax on lands.

Should it be determined hereafter, by any of the states of our Union, to frame an accurate map of its territory, the Coast Survey will have furnished many of the indispensable elements. It has determined for us the absolute position ~~of~~ on the earth's surface of at least some of the most noted points of our domain; and of these several are in the interior of the country. Such determinations, far from the ocean, may appear at first sight to have no natural connection with a coast survey. The necessity of longitude determinations on the coast itself, is obvious enough to any one; not only because they are an essential element of the geodesy, but because they afford the mariner convenient opportunities of verifying the sea-rates of his chronometers, by comparing the well-determined longitudes of these points with those which the chronometers give when he visits them. Neither of these objects seems to be subserved by longitude determinations in the heart of the country; but when we recall the extent to which the telegraph has been of late years called into use, in determining differences of longitude between distant points in our country, it will be seen that it is a question of secondary importance precisely *where* those pla~~ces~~ces are situated whose longitudes from Greenwich are first accurately settled, in order that they may be used as standards of comparison for the points on the coast with which they may be in electric communication: and accordingly the points first and most naturally selected will be those, no matter where, at which facilities already exist for making accurate astronomical observation. Such points, for example, are Hudson and Cincinnati, Ohio, both of which places are provided with

permanent observatories. Another relation, also, these interior longitude determinations have to the Coast Survey. With the march of the telegraph they will be pushed forward to the west, and at no distant day they will form a grand chain extending across the continent, serving in a most satisfactory manner to verify the independently determined longitudes of the Pacific coast.

For the present, however, our interest in these determinations is found in the assistance they will render to any triangulation which may be set on foot, for the construction of an accurate state map. The number of them which the Coast Survey has made is considerable, and will be greater as the necessity or convenience of the survey may require; but as every such determination is attended with some expense, they are not of course multiplied, except on such considerations. The existence of the work, however, affords our legislatures a very favorable opportunity, if they will avail themselves of it, by the exercise of a moderate liberality, to secure the exact latitudes and longitudes of all their capitals, and all their principal cities.

Another facility toward the institution of geodetic surveys of the states may be found in the numerous perfectly ascertained base lines which the survey has measured, and which may be used as the foundation of a local triangulation extending into the interior of each state from the ocean; till at length the Atlantic and Pacific surveys may verify each other in the axis of the continent.

But more than this, in the work as prosecuted along the coast, a *system* has been introduced and perfected; and in any future surveys, which may be undertaken, no part of the processes will be tentative or doubtful. The work of state surveys could therefore be done with the highest expedition and the least expense compatible with the nature of the undertaking.

And finally, under the auspices and the instruction of the present energetic superintendent, there have been training up a body of highly educated, active, efficient and disciplined men, zealous in their profession, and familiar with every detail of field-work, computation and record, that can enter into the geodesy of a state.

All this the survey has already done in the way of facilitating the execution, by the action of the individual states themselves, of a work so greatly on many accounts to be desired, as a geodetic survey of the whole country. But there is one work more which it seems almost indispensable that it should yet do, by way of securing the highest perfection of accuracy to its own results; and which would greatly increase the facilities we have been considering, while it would at the same time extend them into a number of the interior states beyond the limits of its present operations. The work here intended is a triangulation, in a direct line from Maine to Alabama, striding along the Appalachian chain, the back-bone of the country, executed for the purpose of checking and verifying the seaboard triangulation. The facilities for large triangles afforded by the elevated summits of this moun-

tain system, would make it practicable to span the whole distance by a very few steps, involving a far less liability to accumulated error than the triangulation along our circuitous coast; of which a large portion, low and densely wooded, excludes the possibility of long lines of sight. This air line triangulation, measuring the chord of the great arch formed by our Atlantic and Gulf coast, is, in the opinion of this Committee, so eminently desirable, that they cannot but express the hope that it may receive the sanction of Congress at a very early day. It would furnish, directly, base-lines for the geodetic surveys of a great number of states, some of which do not yet possess anything deserving the name of a map of their territory. This is the case with all of the original states, Massachusetts excepted; these not having been, like the younger members of the confederacy, mapped by the system of public land surveys. The maps constructed upon the data furnished by the latter, are, indeed, in a great degree illusory; and they must eventually be superseded by proper surveys: but the errors and contradictions found in attempting to construct a map of one of the older States from existing local surveys, are enormous, and admit of no accommodation.

It is indeed gravely to be regretted that the surveys of our public lands are not conducted by the methods of geodesy. The system now in use found its apology at first in the want of scientific familiarity with the subject in this country. Its essential errors are only beginning to unfold themselves in the experience of the settlers: but they are errors which, from their very nature, must go on enlarging themselves in accumulating ratio. A system of triangulation would have made the nominal limits and areas correspond with the actual; and would, at the same time, have constructed a series of maps of the new states without cost, and absolutely accurate.

The belief is held by some among us that it is not the office of the Federal Government to institute a survey of the entire domain of the nation. Such convictions the Committee can respect, though they can by no means unanimously partake them. But whatever variety of opinion may be entertained on this point, surely no one will regret that, in the exercise of a power which is unquestioned in any quarter, the government of the Union has stimulated the governments of the several states to undertake such a work in the exercise of their own sovereignty. It is surely well that operations which, like those of the Coast Survey, are made imperative by the exigencies of commerce and of a general system of defence against foreign invasion, should also proffer benefits to those states which do not share directly in the hazards of navigation, nor need fortresses to protect them against the approach of an enemy.

Bearing on works of Internal Improvement.—In the earlier part of this report a brief description is given of the field operations by which the topographical features of the land bordering the ocean are ascertained

and delineated. It was there stated that the lines of equal level are drawn on the map at definite distances from each other, measured not from line to line on the map itself, but vertically from one horizontal plane to another; the lowest of these planes, or the *plane of reference*, being the level of the sea. To make the principle of this delineation, if necessary, still more clear, the shore-line itself, or the line where the land and the water meet, may be taken to represent, or may be regarded as being, the lowest, or *zero contour line*. Let then the water be supposed to rise to a level twenty feet higher, as it might actually do in some places, in the daily flow of the tide; and a new shore-line will thus be formed, running into the valleys and jutting out at the points of the hills. This would be the second contour line of the topographical map. Let another and another rise of equal amount take place successively, and a series of contour lines will be formed, which, when delineated on the map, will be near together where the natural slopes are steep, and far apart where they are gentle. Such are the lines which the survey determines. Drawn on the map, they show to an instructed eye the form of the ground more precisely than the most perfect model could do; and by far more satisfactorily than an inspection of the ground itself, which no eye or mind could grasp in one perfect whole; or, if it could, could estimate in regard to the relative level of points remote from each other horizontally, with any sort of precision. For that the ground itself, if it could possibly be seen all at once by the engineer, might be to him all that the map is, in making up his judgments, it would need to have traced on it those very contour lines which are actually traced on the map.

The great practical use of such maps is, that a line of road can be at once, by their help, planned out in such a manner as to have the easiest grades and the gentlest curves, all obtained at the least cost that the work admits. Often, too, they surprise and delight the engineer, by indicating a line of gentle slopes and easy execution between important points already connected by a road running over high hills and descending into deep valleys. These revelations are made by the survey incidentally no doubt, but necessarily, just as the mapping of its systematic soundings (a process precisely analogous) has already revealed important channels, before unknown, though leading into some of our most frequented harbors.

The advantages of such maps, however, can be but imperfectly realized by the Coast Survey, as its topography is restricted to a narrow belt along the coast; but the advantage which might accrue to the commonwealth, from complete topographical surveys of the interior, on the model of the Coast Survey, cannot be over-estimated. Of similar maps of Great Britain, a distinguished engineer, Mr. Vignoles, recently testified in the following emphatic words: "I can lay out on the map the general line of a railroad to within twenty or thirty yards, and say to my assistants 'That is the general line: fill in the details';—whereas, if I had not the advantage of that map, I must go to much trouble and expense in doing that which I here find

already arranged to my hand." The same engineer speaks of the value of similar maps in the Grand Duchy of Baden; and adds, "In Switzerland I found some portions of the contours so accurate, that the line actually levelled, after I had sketched it out, differed scarcely at all from the section produced by plotting from the contours." These maps will even supply an approximate estimate of the cost of a proposed road; and by their portraiture of the country which it is to lay open, will enable us to approach very nearly to its probable revenue and profits.

Bearing on the Advancement of Science in General.—The influence of the Coast Survey in promoting scientific tastes, and in stimulating scientific activity in our country, has been unquestionably great. This influence has manifested itself not only in the zeal and interest which it has awakened in the study of abstract theory, but in the amount and refinement of skill which it has introduced in the application of theory to practice; not only in the spirit which it has diffused with regard to the observation of nature, but in the happy ingenuity which it has developed and set at work for the perfection of methods of observation. It has been itself, in the first place, a school of scientific practice, in which many of the younger officers of our navy have been thoroughly trained in all the details of hydrographic surveying, and in which officers of the military arm have been familiarized with the delicate operations of geodesy. Many civilians, also, have received similar scientific training in the same school, whose proficiency and enthusiasm in their profession have first directly profited the Government in connection with this great public work, and have afterwards, in their retirement from the service, carried into other spheres of action a species of attainment of the rarest, and in our country at the present day, of the most practically valuable kind.

The investigations undertaken by the Coast Survey, in special branches of physical inquiry, have likewise added greatly to the interest of the meetings of the Association, to which this Committee owes its appointment; having been constantly prolific of communications possessing the combined merits of novelty, variety, and value. They have thus aided materially in keeping alive, and in stimulating to higher efforts, the spirit of scientific research among the members of our own body, and, through them, operating upon the tone of public sentiment in all those widely separated parts of the country from which they annually gather. Moreover, these investigations have not merely thus served as a stimulus to intellectual activity, but they have presented models, worthy of all admiration, for the imitation of investigators; and have thus not only kindled among us the zeal to be serviceable to science, but have done very much to show us how we may be most so.

The scientific journals of our country are furthermore greatly indebted to the contributions not only of the chief of the survey, whose labors in this way have been abundant, but also of those associated with him in his work, and who, in their special departments, have brought to light new facts, or

originated new inventions, or developed new theoretic views, which have added to the variety of our periodical scientific literature, and have assisted in advancing our scientific reputation abroad.

If any one particular branch of American science is more indebted to the operations of the Coast Survey for the life which has been instilled into it through their instrumentality than any other, it is probably astronomy. The astronomers of the country have been directly called on by the survey for their active coöperation in settling, in an authoritative manner, questions of latitude and longitude. They have responded to the call not only with cheerfulness, but with zeal; and they have found themselves, in consequence, unconsciously incited or allured into the performance of other labors which had not been demanded, and into the pursuit of new investigations, which had not before suggested themselves. It is certainly true that within the last fifteen or twenty years American astronomy has made great advances; but if this fact is recognized or admitted, it is impossible not to recognize at the same time the important agency of the Coast Survey in promoting its advancement.

It may finally be remarked, that the survey has recently even lent valuable aid to history by causing the preparation of a historical account of the progress of discovery on the western coast, as connected with its hydrography, and by collecting the maps, old and new, which illustrate this history. A work which, in so many ways, and with so abundant success, has contributed to promote intellectual progress at home, and to secure for our country an honorable reputation abroad, cannot certainly fail to command the approving appreciation of every enlightened and patriotic citizen.

OPINIONS OF SCIENTIFIC AUTHORITIES ON THE COAST SURVEY.

When, some years ago, a proposition was introduced into the Senate of the United States to transfer the Coast Survey to the Navy Department, the principal scientific bodies throughout the country presented remonstrances against such a course. The American Academy of Arts and Sciences, the American Philosophical Society, and the Franklin Institute, of Pennsylvania, made elaborate reports, highly approving of the methods and commending the progress of the Survey. The Faculty of St. John's College, of Maryland, and the Professors of the University of Virginia, addressed memorials to Congress in favor of the work as organized.

The American Academy of Arts and Sciences says:

"In conclusion, it is the deliberate opinion of the Committee that the present Superintendent of the United States Coast Survey has, by his able and judicious, his energetic and economical, administration of this great national work, raised it to the highest order of successful activity and deserved popularity; and that he has thereby fulfilled the high expectations which were raised at his appointment."

The American Philosophical Society states:

"That the survey of the coast is a work which, from its importance to our citizens, recommends itself in the strongest manner to the protection of the Government. That the benefits of a scientific and practical character which have already been derived and are constantly resulting from it, are such as to repay abundantly the labor and expense which has been and may be hereafter devoted to it. That it has heretofore been conducted accurately, efficiently, and economically, and that there is every reason to believe that it will best thrive by being left with its present organization. And that, as well from the magnitude of the undertaking as from the skill and energy with which it has been conducted, it will prove honorable to those who first conceived it, and to those who have been engaged in its prosecution."

This Society urges the publication of the observations upon which the maps and charts produced by the Survey have been founded; and extends this recommendation to the methods used for the computation and discussion of the observations:—a subject to which the attention of the Government had been repeatedly drawn by the Superintendent; and which it is, in the interests of science, sincerely to be hoped, will, at no distant day, be favorably acted on.

The Franklin Institute conclude their report with the following:

"First. That the work is national in its character, and ought to be continued by the Federal Government upon a scale commensurate with its practical importance, and with the extent and variety of the objects which are benefited by its results.

"Second. That the manner in which it is at present organized is economical, efficient, and scientific—giving its results with sufficient rapidity, at moderate cost, and upon scientific and practical principles.

"Third. That its labors ought to be (as they now are) divided among the civil, military, and naval talent of the country, in order to secure to each of these departments that knowledge of its processes and determinations which are equally required by them all.

"Fourth. That the benefits which the nation has already obtained from it have fully justified its cost, and that those benefits ought now to be continued to the whole of the States of the Union, upon as broad and liberal a scale as the Government has hitherto applied."

The American Association for the Advancement of Science, at their meeting held in Cambridge in 1849, appointed a committee to consider the subject of the Coast Survey, whose report, entirely favorable to the administration of the work, was unanimously adopted by the scientific men then and there present from the different parts of the United States. Their opinions are expressed in the following resolution:

"*Resolved*, As a sense of the American Association for the advancement of Science, that the manner in which the Coast Survey of the United States has been conducted by Professor A. D. Bache, and those associated with him, is highly creditable to American science, that it promises great benefit to the commerce and navigation of the country, and it is eminently entitled to the continued favor of Congress."

This Association have since testified their undiminished confidence in the Superintendent of this work by electing him their President, the highest position which can be occupied by a scientific man in our country.

When the rumor reached Europe that the present organization of the Coast Survey was assailed, the venerable Humboldt, and his compeer of the French Academy of Sciences, Arago, wrote to their friend and corres-

pondent, Professor Schumacher, of Altona, expressing flattering opinions of the manner in which the Survey was conducted, of the attainments of the Superintendent, and of the honor which our country obtained abroad from the successful prosecution of this great work.

No name stands before that of ARAGO in the science of the world, and he speaks of the probable loss of Professor Bache's services as a misfortune which he desires to unite with all that Europe has most distinguished in science, to prevent."

Baron HUMBOLDT, addressing Professor Schumacher, says:

"You know, better than I do, in how high an estimation the director of the work for the survey of the coast stands, not only among us, but among all the most illustrious men who in France and England are interested in the study of geography and nautical astronomy. To the most solid knowledge of astronomy and mathematics, Mr. Bache unites in a very eminent degree that activity of mind and extent of views which render a work of practical utility profitable to the science of the physics of the globe. In a region of the globe where the direction of oceanic currents, the differences of temperature produced by these currents and by the upheaval of the bottom and the direction of the magnetic curves, offer so important phenomena to the navigators, such a great work could not be placed in better hands than those of Dr. Bache. The Government of the United States has acquired a new right to our gratitude by protecting nobly that which has arrested the attention of the hydrographers and astronomers of Europe. I should be glad to think that in a country where I am honored with so much good feeling, my feeble testimony might contribute to enliven the interest which is due to the excellent labors of Mr. Bache."

Professor SCHUMACHER, the learned astronomer of Altona, transmitting these letters, says:

"You will see, by the enclosed letters of our common friends, M. Arago and the Baron von Humboldt, how anxious they are to know if the great work you have undertaken will remain in the hands to which the whole scientific world would have entrusted it. Let me hope that the fears they entertain are only founded upon vague rumors. Your country must be proud to call you its own, and will repay you in gratitude what you do for her scientific glory."

The Baron von Humboldt very recently expressed to a member of this Committee, in a personal interview, the highest appreciation of the Coast Survey of our country; and the warmest admiration of the manner in which it had been conducted, and of the peculiar qualifications of its chief.

Capt. (now Admiral) W. H. SMYTH, R. N., President of the Geographical Society of London in 1850, in speaking, in his address of that year, of the United States Coast Survey, says:

"The Coast Survey of the United States is a truly national undertaking, and has been most creditably conducted through all its various departments of science. I have studied the question closely, and do not hesitate to pronounce the conviction, that though the Americans were last in the field, they have, *per saltum*, leaped into the very front of the rank.

"Were I asked to give instances, I would say, look to their beautiful maps and charts; see their practise of establishing longitudes by electricity, and the probable extension of its wonderful chronographic applications; mark their novel method of taking and recording transits by a galvanic circuit; and consider the excellence and refinement of their astronomical observations for geodetic purposes, as proved by their

being able to detect the alteration of gravity, caused by a difference in the density of the earth's crust."

The President of the same Society, in his address in 1852, while noticing with admiration the very efficient manner in which the Survey has been conducted, and the rapidity with which the work has been carried on along the western shores of the continent, classes it as "one of the most *perfect exemplifications of applied science, of modern times.*"

And, finally, we may call attention to the emphatic tribute to the value of the Coast Survey, from Sir RODERICK MURCHISON, President of the Royal Geographical Society of London, on presenting the Victoria Gold Medal, adjudicated for the year 1858 to Professor Bache, in consideration of "his successful labors in carrying out the great Coast Survey of the United States of America."

"It would be impossible," he says, "to do justice to an extensive work of this sort on an occasion like the present; but as the previous reports of this celebrated Coast Survey, from 1844 to 1855 inclusive, are in our library, those of our associates, and of the public generally, who wish to form an estimate of their value, can do so at their leisure, and they will see how vastly our medallist has pushed on this great work. They will assuredly then rise from the examination with the thorough conviction that, whether we regard the science, skill, and zeal of the operators, the perfection of their instruments, the able mannner in which the Superintendent has enlisted all modern improvements into his service, the care taken to have the observations accurately registered, his modest and unpretending demeanor, or the noble liberality of the Government, tempered with prudent economy, all unprejudiced persons must agree that the Trigonometrical Survey of the United States of America stands without a superior."

CONCLUSION.

With these voluntary and emphatic testimonies to the character of a work as magnificent in its scientific aspects as it is valuable in those which are purely utilitarian—testimonies, moreover, emanating from sources which rank, in point of authority, among the highest known to the scientific world—the committee might be justified in closing a report already protracted beyond their expectation. After the extended review, however, which they have taken of the purposes in which this great undertaking originated, of the history of its growth, and expansion of the processes involved in its execution, and of the brilliant results which have already crowned its diversified labors, it will probably be expected of them that they should condense the final expression of their opinions into a form sufficiently concise to be comprehended at a single view. As the succinct recapitulation, therefore, of the conclusions at which they have arrived, the committee, with entire unanimity, concur in stating the following propositions:

1. The American Coast Survey, in its inception, was a work imperatively demanded by a due regard to the industrial interests of the country,

dependent, as they are, greatly upon the prosperity of commerce for their free development.

2. The indecision which marked the early policy of the government in regard to this Survey, and the consequent delay of its efficient operations, and postponement of its beneficial results, were of manifest disadvantage to the material welfare of our people, and cannot but be still subjects of serious regret.

3. The economical value of such surveys is attested by the universal voice of all commercial men, and by the concurrent practice of all commercial nations, no less than by the melancholy records of marine disaster annually occurring upon every unexplored coast.

4. Their scientific value is witnessed, in the instance of the American survey, by the spontaneous tributes of approval frequently and freely bestowed upon it—no less in regard to the ability, energy and skill displayed in its management, than to the magnitude, variety, and oftentimes curious interest of the results it has wrought out—by individuals and organized bodies of men, whose high position as scientific authorities renders their opinions upon subjects of this nature entirely conclusive.

5. This work has conferred many valuable benefits upon science, indirectly and incidentally, in the invention or perfection of instruments, in the improvement of methods of observation or of computation, in the development which it has given to special subjects of interesting inquiry, and in the stimulus which it has furnished to the scientific talent of the country, especially in the field of astronomical observation and investigation.

6. A careful study of the progress made from year to year, especially since the enlargement of the scale of operations under the present superintendent, affords ample evidence that the work has been expeditiously prosecuted, and that the amount accomplished up to the present date is materially greater than has ever been accomplished in any other country in the same length of time, and with the same means.

7. Compared with similar surveys executed or in progress of execution by foreign governments, the American survey has been conducted with remarkable economy.

8. Compared with such foreign surveys, the quality of the work done in this will bear the test of any standard that has ever been anywhere set up, and is such as to reflect honor on the scientific character of our country in the eyes of the world.

9. Every consideration of economy, of humanity, and of regard for the reputation of the country, demands that the work should be prosecuted with undiminished activity, until every portion of our coast shall have been as thoroughly explored and mapped as those have been already in which its operations commenced.

10. Conclusive reasons, involving other weighty public interests no less than this, but connected also with the project of verifying in the hap-

piest manner the geodesy of our extended and circuitous coast, conspire to render the triangulation of the great Appalachian chain of mountains a most desirable undertaking, and encourage the hope that our government will very early direct that most important work to be executed.

11. The publication in full of all the observations upon which the published results of the Coast Survey are founded, together with the methods employed in the reduction and discussion of the observations, would be a contribution to science, and especially to the science of geodesy, of inappreciable value, besides being necessary to secure the records against loss; and the committee earnestly hope that the government may not fail to provide the means for the adequate and rapid prosecution of this work.

12. The existing organization of the Survey, judged in the light of the experience acquired by our own and by foreign governments in the management of such works, is, in the deliberate opinion of the committee, preferable to any other that has ever been suggested.

These propositions have not been hastily sketched, and they are not lightly thrown out; but they are announced as the result of mature reflection and careful consideration. With their announcement, the duty of the committee, under the resolution appointing them, is discharged. The committee cannot, however, forget that they have another duty, unprescribed by any resolution, to fulfil; which is, to render to that clear-sighted and comprehensive perspicacity which early perceived and pointed out all the benefits which were to flow from this great national work, the tribute of their admiring appreciation; and to express, on behalf of the Association which has charged them with their present duty, and of the world of science, which they may claim for the moment to represent, their deep sense of the obligation which they feel to be due to the enlightened statesmen who, whether in the executive branch of the government, or in the legislative halls of Congress, have sustained the work to the present hour by their liberal recommendations or their able advocacy, and have labored to conciliate to it the popular favor by their intelligent and manly expositions of its objects and its value.

That largeness of view which can embrace at once the wide area of the entire country, with a clearness of discernment which neither sectional prejudice can distort, nor local barriers obstruct; that broadness of philanthropy which would not have even governments wholly soulless, but would insist that the reasonable claims of imperilled humanity, no less than the importunate demands of sordid interest, should be listened to and regarded in the halls of legislation; that lofty patriotism, which can exult in its country's growth, not only in material wealth and power, but in that intellectual greatness and grandeur which constitute, after all, the crowning glory of a nation; and that philosophic view of the principles of national economy, which, distinguishing between the expenditure that gathers and the expenditure that wastes, comprehends without difficulty how both individuals

and peoples may save to their loss and bestow to their great gain—these eminent and statesmanlike qualities, so often brilliantly manifested at the seat of our Federal Government, in connection with the question of providing for the survey of the coast, are worthy of the admiration of all enlightened men, and cannot fail to win for their possessors, from the voluntary suffrage of an appreciating world and an impartial posterity, a fame by far more enviable than could attend or follow any political honors that could be heaped upon them.

Such high qualities still exist among the distinguished men who hold in their hands the destinies of the country; and though, in the future, as in the past, the prosecution of this great and beneficial public measure may encounter opposition—as nothing entirely good in this world ever met, or is ever likely to meet with unqualified favor or undivided support among men—yet, in the fact of their existence, we may find a guaranty of its continued security; and to their active exercise we may look, without disquietude, for its triumphant defence. In the guardianship of men so enlightened in their views of policy, and so liberal in their tone of sentiment, the future of this great work cannot be doubtful. To them, therefore, in whatever branch of the government they may be found, the committee, in conclusion, most cordially commend it; and as the authorized organs of the body which they represent, and in the name of the associated science of the country, they solicit for it the continuance of the Executive favor and Legislative support which it has hitherto enjoyed.

F. A. P. BARNARD, Chairman.

JOSEPH G. TOTTEN,	W. H. C. BARTLETT,
BENJAMIN PEIRCE,	WOLCOTT GIBBS,
JOHN TORREY,	STEPHEN ALEXANDER,
JOSEPH HENRY,	LEWIS R. GIBBES,
JOHN F. FRAZER,	JOSEPH WINLOCK,
WILLIAM CHAUVENET,	JAMES PHILLIPS,
JOHN LECONTE,	WILLIAM FERREL,
WILLIAM M. GILLESPIE,	EDWARD HITCHCOCK,
F. H. SMITH,	JAMES D. DANA.

370

A POPULAR ACCOUNT

OF THE

UNITED STATES COAST SURVEY.

[From Appleton's New American Cyclopedia, Vol. V.]

1858.

371

A POPULAR ACCOUNT

OF THE

UNITED STATES COAST SURVEY.

[From Appleton's New American Cyclopædia, Vol. V.]

1858.

Blank page retained for pagination

A POPULAR ACCOUNT

OF THE

UNITED STATES COAST SURVEY.

[From Appleton's New American Cyclopedia, Vol. V.]

The coast survey of the United States is a national undertaking of the highest character and importance. Having an extended and dangerous seacoast, with a foreign commerce of $600,000,000, in the pursuit of which nearly 20,000 vessels annually enter and leave our ports, these vessels manned by over 200,000 seamen, while half as many more vessels and men are engaged in our coasting trade, and vast numbers of passengers and emigrant strangers arrive at and leave our shores, it is plainly our duty as a nation to provide every means which science and practical skill can afford for pointing out the dangers to which this commerce is exposed, and to furnish every facility for its successful prosecution. To accomplish these objects the coast survey was founded.

It is designed to furnish accurate maps of the whole coast; to point out the positions for lighthouses, beacons, and other signals; to determine the character and course of the currents of the ocean along our shores; to develope and determine the laws of the tides; to ascertain the prevailing courses of the winds, and the general laws of atmospheric influence, the changes which take place at the entrances of our harbors, the character of the bottom of the sea within the limits of soundings, and all other questions which contribute to a thorough knowledge of our coast and its adjacent waters.

It has also the further object of distributing this knowledge throughout the world, so that all nations may partake of its advantages.

373

For the accomplishment of these objects a wide range of application of the practical sciences is required. Astronomy and geodesy furnish the means of projecting maps. The highest forms of mathematical science are required in the investigation of the laws of the tides, and the figure of the earth. Geology explains the changes which are constantly taking place in all our harbors and rivers, and the general form of the coast. Natural history accounts for the formation of those coral reefs in the southern waters, so long the terror of navigators, predicts their growth and extension, and investigates the forms of animal life at the bottom of the sea, thus affording new and unexpected aids to navigation. Physical science furnishes the electric telegraph, by which longitudes are determined, and the electrotype and photograph, by means of which engraved plates and charts are indefinitely multiplied. The mechanic arts supply the most delicate instruments, and the industrial arts of drawing, engraving, and printing, are all required in their greatest perfection.

For the expanded conception of this great institution, as it now exists; for the administrative skill which has perfected its organization; for the solution of the most interesting questions of science which it has involved, especially those of the tides, the gulf stream, and the magnetic force; for the genius which has brought to the highest perfection the scientific methods employed; for the untiring labor which has, within the short period of fourteen years, produced greater results than any other institution of the kind, the world is greatly indebted to Prof. A. D. Bache, the present superintendent of the United States coast survey.

The first attempt to organize a national coast survey was made in the year 1807. In that year President Jefferson, in his message to congress, recommended the establishment of a national coast survey, "for the purpose," according to the message, "of making complete charts of our coast, with the adjacent shoals and soundings." At that time the only charts of our extended and dangerous sea-coast were those of the "Atlantic Neptune" of Col. Des Barres, Romaine, Gaulde, and compilations from those works by English and American publishers. Congress accordingly passed an act authorizing such a survey, and appropriated $50,000 for the purpose of carrying out the provisions of the law; and the secretary of the treasury, Mr. Gallatin, addressed circulars to the principal

scientific men of our country, requesting their opinions with regard to the best methods of conducting the proposed work. The plan proposed by Mr. F. R. Hassler was adopted: this plan was essentially to establish the positions of certain prominent points of the coast by astronomical observations, and to connect these points by trigonometrical lines, so as to form a basis upon which the nautical survey could be made. Mr. Hassler, a native of Switzerland, had been engaged in the trigonometrical survey of that country, and was eminently fitted by his scientific attainments for the execution of the task to which he was now called.

On account of the threatening nature of our relations with Great Britain, nothing was done, however, until 1811, when Mr. Hassler was sent to Europe, for the purpose of procuring the necessary instruments and standards of measure for commencing the work, and the war which followed unfortunately caused him to be detained abroad as an alien enemy until 1815. On his return, he was formally appointed superintendent of the coast survey, and commenced his first labors in the field in 1817, in the vicinity of New York. His first work was the measurement of a base line, in the rear of the palisades of the Hudson, as a foundation for the triangulation of New York harbor and the adjacent coast. Before he could publish the results of his first year's labor, however, the coast survey was effectively discontinued, and another long interval of ten years elapsed, during which the additions made to a knowledge of our Atlantic coast were through detached surveys of a few of the more important harbors, made by the navy and the topographical engineers of the army, and those of the Messrs. Blunt.

In 1828, the Hon. Samuel L. Southard, then secretary of the navy, urged upon congress the importance of reëstablishing the coast survey on its original plan; and in 1832, four years afterward, Mr. Hassler was restored to his position, and enabled to resume the work which he had before commenced.

A quarter of a century had now elapsed since Mr. Hassler first urged his scheme of a thorough trigonometrical survey; he continued to superintend its operations until his death, which occurred in 1843, when the survey had been extended from New York eastward to Point Judith, and southward to Cape Henlopen. He was succeeded in his important office by Professor A. D. Bache, the present superintendent.

On assuming charge of the coast survey, Prof. Bache saw the necessity of extending the plan, so as to embrace all the objects of which we have spoken. He urged upon congress the importance of carrying on all the principal operations at different points of the coast at the same time, the different sections to be conducted on the same general principles, and to be ultimately connected, so as to form a complete and continuous work. He saw that the great characteristic feature of the Atlantic, the gulf stream, must be investigated; the laws of the tides developed, so that navigators might be furnished with correct information regarding their ebb and flow in the harbors and rivers; the infinite maze of currents which are produced by the tides, the gulf stream and the winds combined, threaded out and mapped; the magnetic force of the earth studied, and its laws along our coast determined; the changes of the weather at different seasons of the year, and the laws of storms, investigated. All these conceptions were far beyond any that had been entertained, and Prof. Bache at once organized those systematic observations which have extended through the fourteen years of his administration, and which are now developing the most important results to navigation and to science.

These general facts with regard to the history and progress of the United States coast survey being stated, we come to the scientific and practical operations involved in its execution. An explanation of these operations will embrace a variety of topics, and a brief notice of each only can be given.

The first object of a work of this kind is an accurate determination of the shore line; this is done entirely by operations upon land. The object of a map or chart is of course to give a miniature representation of a portion of the earth's surface upon paper, in such a manner that the different parts of the drawing shall have the same relative positions and dimensions as are found in nature. To determine these dimensions by lineal measurement for the purpose of reducing them to the scale of the drawing would be practically impossible, and hence the use of geodetic or trigonometrical surveying.

Geodesy.—To illustrate this mode of measuring distances, and establishing the relative positions of points on the earth's surface, let us suppose ourselves to be situated on a level plain, surrounded in the distance by high mountains, and that we wish to determine

the distances from our position to the tops of those mountains, and the distances of the different mountain peaks from each other. A line is measured on the plain of such a length that if two lines be drawn from its extremities to one of the mountain tops, they will intersect at a considerable angle, and form with the measured line a triangle of proper dimensions: then, knowing the length of one side of this triangle, we may compute the length of the other two sides by a simple theorem of trigonometry, without any further labor than measuring the angles of the triangle. Taking now either of the computed sides as a new base, we may establish a second triangle upon this, and thus fix the position of another point; a third point may be established in the same manner, gradually expanding the system until the whole region we wish to embrace in the map is covered with a network of triangles, the lengths of the lines having been computed by measuring the first only, and then measuring the angles of the triangles. For the purpose of a map or chart there are still two important elements wanting. We have yet no means of knowing the direction of any one of these lines with reference to the meridian, nor the place which the points occupy on the surface of the earth; the survey thus far will give no means of knowing whether any two points are situated in a north and south, or an east and west line, nor whether it be located near the equator or near the poles, or to the east or west of the first meridian. These wants are supplied by astronomical observations, by which the latitude and longitude of some point, and the directions of the lines with reference to the meridian, are determined. The system of triangles which we have described may be extended over large areas, or along a coast for several hundred miles, depending upon one measured base line; and by determining the positions of the extremities of the base line, and its direction, by astronomical observations, the positions of all the other points of the system, and the direction of the lines, may be computed after the angles are accurately measured; but accuracy requires that the computed positions should be frequently verified by actual observation, and the computed lengths of the lines occasionally verified also by the introduction of a measured base of verification. The geodetic work thus involves the measurement of the base line, the measurement of the angles of the triangles, and the astronomical determination of the latitude and

longitude of the different points, and of the directions of the lines with reference to the meridian.

Reconnoissance is the first operation in order. An experienced officer first travels over the country to be surveyed, and makes a preliminary examination for the purpose of selecting the trigonometrical points which will best fulfil the required conditions. Elevated positions are generally chosen, from which extended views can be taken. A site for a base line is selected on some level plain for convenience of measurement, and from which the triangulation can easily be expanded. In the selection of geodetic points great judgment is required, as upon this depends, in a great measure, the economy, accuracy, and success of the work.

Base line.—For the measurement of the base line a standard of measure must be adopted. The English use the yard, which is also the legal standard of length in the United States, but in the coast survey measurements the French *mètre* is used, which is more convenient on account of bearing a certain relation to the magnitude of the earth, being equal to the ten millionth part of the earth's quadrant. The metre bar used as a standard in the coast survey is one of those originally made by the French committee of weights and measures. For the actual measurement of base lines, rods of wood, metal, or glass have been used; but the changes of length caused by changes of temperature in a simple bar of any material have rendered it desirable to construct an apparatus for the special purpose, upon a compensating principle, which will retain the same length under all temperatures. The base apparatus of the coast survey, devised by the present superintendent, is considered the best known. It has the same length not only at all stationary temperatures, but preserves it also while the temperature is changing. Bars of different metals, having the same dimensions, and exposed to the same source of heat, will not heat equally in equal times. The thickness and surface of the bars are therefore so proportioned to their relative power of conducting and absorbing heat that they will equally follow changes of temperature. The principle of the level of contact has been applied to this apparatus, and the exactness of its operations is so great that lines of 7 or 8 miles in length may be measured with a probable error of only a fraction of an inch. Two sets of compensated bars are used, each 6 metres, nearly twenty feet, in length.

Mounted on trestles provided with every mechanical movement for adjusting the bars in height and direction, it is handled with such facility that on favorable ground a mile may be measured in an ordinary working day.

Triangulation.—For the measurement of the angles, theodolites of the most accurate construction are used. In the primary work on the eastern coast a large theodolite, with a circle 30 inches in diameter, is employed. This is carried to the summit of the hill or mountain where the angles are to be measured, and established carefully over the station point, where it is left standing until the measurements at that point are completed. The party having this work in charge live in tents near at hand, so as to take advantage of the occurrence of favorable weather for the observation of distant signals. The instrument is furnished with a powerful telescope, which will give a distinct view of such signals. The signals are generally straight poles, supported by a tripod, erected at the various points, but on the long lines an instrument for giving signals is used called a heliotrope. This is simply a round mirror, about the size of a dollar, so mounted that an assistant at the distant station is able to reflect the rays of the sun in the direction of the observer. It is not unusual to see the heliotropes on the summits of mountains 80 or 90 miles distant, when the outlines of the mountains are not visible. The measurement of the angles at a primary station occupies three or four weeks; it is found to be impossible to work during the middle of the day, on account of the agitation of the atmosphere caused by the heat of the sun, and hence only about two hours in the morning and evening can be devoted generally to this work. Each angle is determined by about 30 measurements; and as at each station there are always from 10 to 20 angles to be measured, only two or three primary stations can be occupied in one season.

Depending upon the primary triangulation, and controlled by it, a net work of secondary and tertiary triangles is formed along the sea coast, and extending up the bays and rivers. The angles are measured with theodolites, more portable than the one mentioned, of inferior size, varying from 6 to 12 inches diameter, according to the distances to be observed. These triangulations determine the relative positions of prominent points at distances averaging from 2 to 5 miles, and thus form a skeleton map, in which the de-

tails of configuration of shore line and surface remain to be supplied by the topographical survey. In order to fix the situation of the whole network of triangles on the surface of the earth, it would suffice to determine the latitude and longitude of some one point, and the direction with reference to the true meridian of one of its lines—its azimuth—if the figure of the earth were precisely known. But owing to the irregularities of the latter, it is found necessary to repeat those determinations very frequently, by which means the work is checked, and any accumulation of error avoided.

Latitude.—All the various known methods of determining latitude have been used in the coast survey for the purpose of ascertaining their relative merits. Large vertical circles, or repeating theodolites, were first used for observing double altitudes or zenith distances, but made way for more perfect and larger instruments, the zenith sector, the prime vertical transit, and the zenith telescope or equal altitude instrument. The former, constructed according to the plan of Prof. Airy, the astronomer royal of England, gives very satisfactory results, but is rather heavy for transportation, and the observations are laborious. The method of determining latitude by observations of transits of stars over the prime vertical, first used by Bessel, is admirable in theory, but in practice a great loss of time and labor is often caused by clouds. The *zenith telescope*, or equal altitude instrument, was first applied to the determination of latitude by Capt. A. Talcott, late an officer in the United States army, and has been remodeled and specially adapted to the purpose in the coast survey, where it has become the favorite instrument on account of the great number and accuracy of the results that can be obtained in a given time, and the facility with which it is used. A large number of observations, from 150 to 200, are made at each station, and the mean is taken as the result, the uncertainty of which is thus reduced to a small fraction of a second.

Longitude. For the purpose of determining the longitude of all points in the coast survey with reference to Greenwich and other European observatories, it is only necessary to ascertain that of some one point, the difference from which of all others is known by the triangulation and by differences of longitude obtained by means of the electric telegraph. The observatory at Cambridge,

Mass., has been used as such a point of reference; its longitude from Greenwich has been determined by astronomical observations of eclipses and occultations of stars by the moon, and of moon culminations, made not only there but at other observatories in the United States, the longitude of which from Cambridge has been determined by electric telegraph. Beside the astronomical methods, the chronometric method has also been used. A large number of chronometers have been transported repeatedly, and in different years, between Cambridge and Liverpool, for the purpose of comparing the time of the observatories at these places. The results of these expeditions, in which special regard was had to the effect of temperature on the rate of the chronometers, show a pretty close agreement in different years, but differ nevertheless from those by astronomical observations by about two seconds of time. It is to be hoped that a submarine telegraph will ere long afford another, and perhaps very accurate method of verifying those results, and determining the longitude within the narrowest limits of error.

The *telegraphic* determinations of longitude have been extended from Washington northward to Philadelphia, New York, Cambridge, Bangor, and Halifax, and southward to Petersburg, Wilmington, Charleston, Savannah, Mobile, and New Orleans. In this method, which is by far the most accurate for determining difference of longitude, the coast survey has taken the lead, and has brought it to a great state of perfection, which subsequent operations of a similar nature executed in Europe have not yet reached. The idea of comparing the local time of different places by means of the electric telegraph is sufficiently obvious, and dates from the conception of the telegraph itself; but the refined methods by which the intervention of human senses and operations, and the consequent liabilities to error, are in the greatest possible degree avoided, and by which the time of transmission is measured and eliminated from the longitude, have been the result of careful study and long experience. The first experiments on the velocity of galvanic signals were made in 1848; they have since been frequently repeated, and the velocity is found to vary from 10,000 to 20,000 miles per second, according to the size and kind of wire employed. The manner in which this experiment is made is essentially as follows: An astronomical

clock is so connected with the telegraph wires as to graduate by its beats, slips of paper, delivered with uniform velocity, into spaces representing seconds of time, each about an inch in length, both at the place where the clock is and at some distant station. If now at the latter station arbitrary signals are made between those given by the clock and transmitted to the clock station, the corresponding marks on the register at that place will appear later, or more distant from the preceding clock marks, than on the register where they are made, the difference measuring the whole time of transmission from the former to the latter station and back again. On the Pacific coast, and at stations in the gulf of Mexico to which telegraph lines do not yet extend, longitudes have been determined by the astronomical methods.

Azimuth. The direction of the meridian is determined by observations on the pole star, or other close circumpolar stars, at the time of their passing the meridian, or of their greatest eastern or western elongation. The angle between the vertical plane passing through the star and that passing through one of the triangle sides is measured with a theodolite. The angle which the former plane makes with the meridian can be computed from the time of observation and the star's place, and thus the azimuth or true bearing of the triangle side becomes known, as well as the bearing of all other sides connected with it by triangulation.

Geographical positions. The geographical positions of coast survey stations, as determined by the means above detailed, and bearings and distances (expressed in metres, yards, and miles), are published from time to time. In the coast survey reports for 1851, '3, '5, and '7, the positions of 5,500 trigonometrical stations are given.

Topography. This is a representation on paper of the natural features of the country. The outlines of the shore, the irregularities of the surface, the forms and dimensions of hills, forests, streams, rocks, meadows, towns, and villages, are all represented by certain conventional modes of drawing, well understood by those who make use of the maps. The drawing presents to us the surface of the earth as it would appear to an observer from above it. The surveyor uses a table or board, on which is fitted a sheet of drawing paper; on the latter several points of the triangulation are already plotted. In order to map intermediate points, he

places his table on the ground and determines its place on the sheet by drawing lines on the paper in the directions of at least 3 of the trigonometrical points; the intersection of these lines on the paper will give the position which his table ought to occupy on the map. Having fixed this point, he directs his rule to any prominent points in sight, and draws lines in their direction. Then, going to a second point and fixing his position in the same way, he sights to the same objects as before from his new position; the lines so drawn will fix by their intersection the places of all these points on the map. It is, in fact, a practical continuation of the triangulation on a minute scale. Accidental details of ground and slight irregularities of shore line may be drawn by the eye. The topographical maps are generally surveyed on a scale of $\frac{1}{10000}$ of the natural dimensions. In localities where a great amount of detail is to be represented, such as large cities and their vicinity, a scale of $\frac{1}{5000}$ is employed, while on flat and thinly settled ranges of the coast a scale of $\frac{1}{20000}$ is used. The extent of ground represented upon a single topographical sheet depends upon the scale; on a scale of $\frac{1}{10000}$, or about 6 inches to the mile, a square foot of the drawing represents about 4 square miles of the surface of the earth.

Hydrography. The survey of the land being completed by the methods detailed, the hydrographer is prepared to refer his examinations and soundings to their true positions. Under the head of hydrography are placed all those operations which are performed at sea for the determination of the positions of rocks, shoals, the depth of the water, and the investigations of tides, currents, &c. The principal labor is that of sounding. With the outlines of the shores furnished by the topographer, the hydrographer has only to measure certain angles upon the shore signals every time he throws his lead, and the position of every sounding is thus determined with such accuracy that the navigator may even run his course by the soundings given on his charts. The angles are measured by a sextant, and the position of the boat or vessel is by means of them laid down on the chart. In practice the position of the boat is not determined at every sounding, but at every 6th or 10th, according to frequency; and the intermediate soundings, being taken at equal intervals of time, are laid down at equal intervals between the positions determined by angles. The num

ber of soundings is generally so great that the features of the bottom of the sea within a wide belt adjacent to the coast are almost as well determined as those of the land; and with the further assistance of the specimens of the bottom, which are always brought up with the sounding lead, the mariner may, during foggy weather, determine his position with considerable accuracy by sounding alone.

Office work. The observations and charts made in the field are at the close of each season's work sent to the coast survey office in Washington, where they are combined to form the charts. The triangulation and astronomical observations are subjected to a double computation, first by the observers and next by the computers in the office, in order to insure perfect accuracy and faithfulness. The topographical and hydrographical sheets are combined, and reduced drawings are made on scales suitable for publication. A connected series of charts of the whole coast is projected on a scale of $\frac{1}{80000}$. Beside these, local charts of harbors and bays are published on larger scales, adapted to the importance of the locality and amount of detail to be shown. General coast charts are also published on a scale of $\frac{1}{400000}$. When the reduced charts are drawn and verified, they pass into the hands of the engraving division of the office, where they are executed on copper in the highest style of art. When the plates are completed, electrotype copies are taken of them, which serve for printing the charts, the original plates being preserved in the archives of the coast survey. The electrotyping establishment of the coast survey is very extensive, and one of the most successful in the world. It was in practical operation several years before the process came into general use, and considerable advances were made in the art at this establishment. The charts are finally printed at the coast survey office, and distributed to sale agents in the principal seaports. The prices are fixed at very low rates, so as to place a complete set of charts within the reach of every navigator. Provision has been made by congress for the publication of the observations made in the progress of the coast survey, so as to place the data on which the correctness of the charts depends beyond the possibility of loss, and to submit them to the criticism of the world.

Organization. The operations of field work, which have been

described, are carried on simultaneously at a great many points on the coast. The Atlantic and Gulf coast are divided into 9, and the Pacific coast into 2 sections, each having its triangulation, astronomical, topographical, and hydrographical parties, all working independently, but upon the same system, so that in the end the whole will form a connected survey from Maine to Texas, and from San Diego to the 49th parallel on the Pacific. For conducting these operations, there are employed in the coast survey, exclusive of hands and seamen, about 36 civilians of different grades, 12 or 15 army officers, and 50 officers of the navy; a great number of the latter being required for the vessels engaged in the hydrography, which are under naval discipline. This force does not include computers, draughtsmen, engravers, and clerks employed in the office. The whole work is under the control of the U. S. treasury department, while the superintendent directs all the details of the work, governs the movements of the parties, and controls the expenditures. The expense is defrayed from annual appropriations by congress, made upon estimates submitted by the superintendent, which from 1853 to 1858 have averaged about $200,000 yearly, for the Atlantic and Gulf coast, and about $150,000 for the western coast. The progress of the work from year to year is given to the public in the annual reports of the superintendent. In these reports the results of the year's operations are not only given, but also the ways and means by which these results are obtained. The liberality of congress in publishing and largely distributing these reports has greatly tended to increase the public interest in the work.

Figure of the earth. The geodetic system of surveying originated in the efforts of philosophers to determine the precise figure and size of the earth. It is well known that the earth is not exactly spherical, but is flattened slightly at the poles of the axis about which it revolves, this axis being about 26 miles shorter than the equatorial axis. The determination of the relative lengths of the earth's axes has been one of the most important physical problems of all ages, the dimensions of the earth being essential elements in the mathematical investigations connected with astronomy, and in the computations of trigonometrical surveys. The measurements of extended arcs of meridian and parallel furnish the best means of determining these lengths, and the

problem has been considered of so much importance, that expensive expeditions have been fitted out, and surveys made in different parts of the world, for this object alone; and although approximate determinations have been made, yet it cannot be said that the dimensions of the earth are definitely settled. The primary triangulation, while intended solely for the survey of the coast, will furnish, incidentally, valuable contributions to science in this respect. One arc of $3\frac{1}{2}$ degrees or about 210 miles will be measured from the island of Nantucket to Mount Blue in Maine, another from the head of Chesapeake bay to Portsmouth, Va., and an arc of parallel along the gulf of Mexico. These measurements will involve no additional labor or expense. An arc of meridian 1,500 miles in length has been measured in India, one of 1,800 miles through Russia, extending from the Black sea to the Arctic ocean, and another of 900 miles in France, from Dunkirk to the island of Formentera in the Mediterranean. Several arcs have also been measured in Germany, and in fact there is hardly a civilized nation that has not contributed its share to our knowledge of this subject. It was in the first attempt to measure the French arc that the science of geodesy originated.

Mariner's compass. It is well known that every navigator determines his course and direction by means of an instrument called the mariner's compass; an instrument which depends solely upon the direction which a small needle or bar of steel assumes, when magnetized and left free to move in any direction. This direction is nearly north and south, and it was formerly supposed that the north end of the needle pointed directly to the north pole of the earth, to which it was attracted by some powerful agent in the polar regions. Continued observation and study of the subject, however, disclosed the fact that this was not true; the real direction of the needle at any point between the equator and the poles is inclined to the horizon, and also to the true meridian; or in other words, the needle has a *dip* and a *variation* or *declination*. At Key West, for instance, the dip of the needle is 55°, at Cape, Hatteras 68°, at New York 73°, at Halifax 76°; while the declination is 5° E. at Key West, and 6° W. at New York; and between these places there is a line where there is no variation from the true meridian; this line passes near Wilmington, N. C., Charlottesville, Va., and Pittsburg, Pa. Going westward from this line, the

declination of the north end of the needle to the east of the true meridian increases rapidly until the Pacific coast is reached, where it is from 15° to 20° E. It is found also that the direction at any one place is not constant, but that it changes not only during each day but from year to year. In surveyors' and mariners' compasses the dip of the needle is overcome by suspending it from a point above its centre of gravity, but the declination still exists and gives rise to what is popularly called the "variation of the needle." Surveyors on land generally have the means of ascertaining the variation by astronomical observation, by which very great errors in their maps may be avoided, put the common mariner has no such resource. In sailing from the gulf of Mexico to Portland, Me., his compass would pass through all points, from 5° E. to 12° W. How is he to know this, unless it be put down on his chart? And how will a chart for one year answer for another, when the declination is constantly changing? It is plain that the laws which govern these changes must be found out, by which the changes may be predicted. The determination of these laws, as also the actual direction of the needle at various points of the coast at particular times, have occupied the attention of the superintendent of the coast survey. It is impossible to explain here the delicate and laborious nature of the observations necessary for determining the direction and intensity of the magnetic force. The results published by the coast survey have been obtained by comparing the observations of many years with the deductions of theory, and may be said to exceed in importance and usefulness all that had previously beendone in this country. This subject having been made a special study by Prof. Bache before he assumed charge of the coast survey, he was prepared to bring to the work the observations and experience of many years' labor. The report of the coast survey for 1856 contains the results of observations made by the survey at 177 stations along the Atlantic and Pacific coasts, between the years 1844 and 1856; to these are added observations obtained from various sources in the interior of the continent, and from all these a map is constructed giving the lines across the continent along which the dip is the same, and along which the declination is the same, and corresponding lines for the intensity. From such results the laws are obtained for predicting future changes. From these facts the importance of a full investigation of a subject of

such vital interest to navigation may be appreciated. As it forms a part of the duties of the coast survey to furnish the mariner with all the information possible on this subject, it ought not to be neglected, even in a brief account of the work.

Tides. One of the most difficult questions which has ever been presented to men of science is the solution of the problem of the tides. The importance to the mariner of knowing the exact rise and fall, and the times of high and low water, may be appreciated when we consider that the entrances to many of our rivers and harbors on the Atlantic coasts are obstructed by sand bars, which can only be crossed by vessels of more than ordinary draught at the highest stage of the water. It becomes therefore an object of great importance to commerce and navigation to determine the laws which govern this rising and falling of the sea, and to furnish to the mariner such rules as will enable him to predict with certainty all the phenomena connected with this important subject. There is indeed no subject which is so constantly in a sailor's thoughts on approaching the entrance to harbors and rivers, as the tides; in many cases the safety of his ship and his life depends on his precise knowledge of the time of high water, or the ebb and flow of the current.

A question of such high importance has not escaped the most rigorous investigations of philosophers. Its solution theoretically was one of the first results of Newton's theory of gravitation. The most casual observer may notice the close dependence of the tidal phenomena upon the moon's motion; the wave of high water following the moon in her motion around the earth by a determinate interval of time, and the height of the tide depending also upon the positions of the sun and moon. As the elevation of the water is produced by the joint attraction of the sun and moon, the height will be greatest of course when those bodies are in conjunction, that is at new and full moon, thus giving rise to what mariners call *spring tides.* When the moon is 90° distant from the sun, or in quadratures, their joint effect will be least, and the *neap tides* will be produced. The discussion of this problem has engaged the attention of the most profound mathematicians since the days of Newton, particularly Laplace; and yet the mathematical theories, although correct, have failed until recently in giving results which have been confirmed by observations. The cause of the discrepancies has

existed, not in the mathematical deductions, but in a want of knowledge of the physical geography of the globe, and of the depth and form of the bottom of the sea; and although very important advances in our knowledge of this subject have been recently made by the investigations of Sir John W. Lubbock, Professors Whewell and Airy, and still more recently by the superintendent of our coast survey, Prof. Bache, yet it may be said that even with the vast accumulation of observations which have been made, to aid in the investigation of this subject, it is still one of the most perplexing questions in physical science. The investigations of Prof. Bache have given more satisfactory results, in some instances, than any previous efforts.

On assuming charge of the coast survey, Prof. Bache organized a system of tidal observations embracing the entire coast; it is the most extended system of observations that has yet been attempted, and has already produced highly useful results. Observers are required to note hourly the height of the water at each tidal station, by means of a staff placed in the water, by which the precise times and height of high and low water can be determined. A self-registering machine is also much used, which, through the medium of clockwork, traces a curve on paper representing the successive changes in the height of the water. Over 800 tidal stations have been established on the Atlantic coast, and on the western coast observations have been made at frequent intervals for about 1,300 miles. The observations at the principal stations are continued through several years. The investigation of so many observations of course involves very laborious computations, the great object being to combine the results of the observations with theory, in such a manner as to furnish rules for the prediction of future results. The results of this branch of investigation in the survey have been published in the annual reports of the superintendent as the work has progressed, showing the success which has attended his labors. The report for 1856 contains tables of comparison of predicted tides of Boston harbor with the results of actual observation, in which the predicted times of high water coïncide with the times observed within 4 minutes. Such accurate results had never before been attained, and this contribution to knowledge may be regarded as one of the most important of the present day, and one which will prove of inestimable advantage to

the commerce and navigation of our coast. In the same manner tables have been constructed for over 60 points on the Atlantic coast, and 14 points on the Pacific coast, by which navigators may ascertain the time and height of high and low water at each place for any day in advance, with a certainty heretofore unknown.

Gulf stream.—One great characteristic feature of our Atlantic coast and navigation is the Gulf stream, which sweeps along the shores of our continent from the tropics towards the Arctic regions.

The trade winds of the equatorial regions blowing constantly in one direction, force the surface waters of the Atlantic through the many openings into the Caribbean Sea and Gulf of Mexico, where they are heaped up sufficiently to give rise to a current, with a velocity of from two to four miles an hour, through the Straits of Florida.

The current, thus established, follows the deep sea channels along our coast, nearly parallel to the shore, to Cape Hatteras, where an eastwardly direction is given to the stream, which passes within two hundred miles of Sandy Hook, and, continuing its course beyond Nantucket, finally reaches the Azores and the western coast of Europe.

On assuming charge of the coast survey, Professor Bache perceived at once the importance of investigating such an important feature in the navigation of our coast, and immediately organized, with the authority of the Executive and of Congress, a system of observations, for the purpose of determining its limits and principal characteristics.

Previous to that time, casual observations had been made by private and public vessels of England and America, the results of which were collected by Major James Rennell, F. R. S., and published in his work on the currents of the Atlantic ocean. These observations were confined to the surface, and gave only vague results.

The method of exploration adopted by Professor Bache was, to determine the limits of the stream by the temperature of its waters at all depths, by means of deep sea thermometers, along lines perpendicular to its several directions. This work was commenced in 1845, and has been continued up to the present time. Sixteen sections have been run across the stream at different points of the coast, along which the temperature of the water at various depths

has been determined, and also sections of the bottom, wherever it has been found possible to obtain soundings.

These explorations have developed many important and interesting facts not before known. It has been found that the stream divides, after issuing from the Straits of Florida, into several branches, which run on in slightly diverging directions without reuniting.

These branches are separated by comparatively cold water, so that the whole stream is composed of alternate warm and cold bands. The inner warm band, which may be regarded as the axis of the stream, and where the swiftest current and highest temperature are found, is limited on the inshore side by an abrupt wall of cold water; on the outer limits of the stream the warm waters thin out and finally mingle with those of the ocean.

The general feature, with regard to temperature, in going from the shore outwards, may be described as follows: on leaving the shore, and, generally, on soundings, the water is cool, and so continues to the "cold wall." Here the temperature rises rapidly, and a few miles farther out reaches summer heat, rising in some instances 20° Fahrenheit in a few miles. The temperature then falls, indicating a band of cool water. Farther on it rises again, and again falls, and so on, showing three principal warm and three cold bands.

These phenomena exist at all depths as low as several hundred fathoms, where the cold water of the bottom is reached: they are invariable, as repeated explorations along the same lines prove.

In several of the southern sections, this division of the waters of the stream is found to correspond to the ridges and channels of the bottom of the sea, affording reason to conjecture that the same may be true throughout its whole extent.

Off Charleston, the axis or first warm band is about seventy-five miles from shore, and here the stream, with all its branches, is about one hundred and thirty miles wide, its mean velocity being between two and three miles an hour; at Cape Hatteras, the axis is found less than fifty miles from shore, and close against the Hatteras shoals. Here the total width is two hundred and fifty miles, and the mean velocity two miles an hour. Abreast of Cape May, the stream turns and runs directly eastward: the first band is met one hundred and fifty miles from shore, and the total width is about

three hundred miles. Continuing to the eastward, the axis is found about two hundred miles from New York and Nantucket, and the mean velocity is reduced to about one mile per hour. Its width off Nantucket is uncertain.

These are the general deductions as far as the observations now extend: the work is still in progress, and investigations are also being made on the currents close along the coast, and which are the effect of the tides, winds and Gulf stream combined.

The investigations of the tides, the gulf stream, the magnetic force of the earth, and the meteorological conditions of the atmosphere, have an equal bearing upon the interests of navigation and commerce, and the sciences connected with the physical condition of the globe, but there are other practical results of the coast survey which have a more direct influence in protecting our commerce from the dangers by which it was formerly attended; a consideration of these results will exhibit the advantage of an intelligent application of true scientific principles in all works of this character. Previous to the year 1844, 300 vessels were wrecked annually on our coast, attended with a great loss of human life; of these vessels $\frac{1}{6}$ were destroyed on the Florida reefs. To illustrate the causes which led to this great loss of life and property, it will only be necessary to mention a few of the discoveries made by the survey of the coast. The entrance to Delaware bay between Cape May and Cape Henlopen was found to be 8 miles in error. Six dangerous shoals were discovered in one year in the vicinity of Nantucket, lying directly in the track of our European commerce, and of the heavy coast trade between the eastern and southern coasts. A new channel, with 2 feet more water than any other, was discovered at the entrance to New York harbor. Dangerous shoals have been discovered at the entrance to Chesapeake bay, and along the coast of Virginia and North Carolina. Numerous others might be mentioned of no less importance, but these are sufficient to show the inaccuracies of all our charts previous to the investigations of the coast survey. The means that have been applied to correct these great evils have not been incommensurate with the end.

It may be said that advantage in economy is not the least of the practical results of the scientific methods of the coast survey.

Compared with foreign surveys, it is not only more accurate and detailed, but its results have been produced with a rapidity and economy altogether unprecedented. The English survey was commenced in 1791, and is still unfinished, the land work being unconnected, generally, with the hydrography; and the cost of the English survey is more than 4 times the cost of ours. During the 10 years previous to 1844, Great Britain expended for hydrography alone $7,500,000. The total cost of the United States coast survey up to that time was only $800,000, including land work and hydrography. The duties alone on the goods of half a dozen ships yearly, amounted to the whole annual appropriation for the coast survey, and at the present time the annual cost of the survey is but little greater than the cost of a first class steamship. With this small amount of expenditure the survey has been extended so as to embrace the whole of our Atlantic and Pacific coasts; the Atlantic coast being divided into 9 sections, and the Pacific into 2. During the year 1857, 20 triangulation parties, 3 astronomical parties, 12 hydrographic parties, 23 topographic parties, and 2 magnetic parties were in the field, beside the computers, draughtsmen, engravers, &c., employed in the office. The triangulation at the close of 1857 covered an area of 41,000 sq. m.; 27,000 m. of shore line have been surveyed by the plane table; 4,888,885 soundings have been made, 841 tidal and 783 current stations occupied, 7,000 specimens of the bottom preserved; 675 original topographic, and 559 hydrographic sheets have been surveyed, 376 reduced drawings of the same executed, and 66,576 printed sheets of maps distributed, beside 43,000 now in the hands of sale agents. It is estimated by the superintendent that on the scale of progress of the last 3 or 4 years, the survey of the whole Atlantic and gulf coast will be completed in 12 or 15 years.

ance, when it is considered that on the successful administration of the affairs of this Institution depends the bestowment of other legacies of a similar character, intended for the good of men. If this Institution should prove a failure, the loss would not be confined to the money bequeathed by Smithson, but would involve the loss of confidence in the management by public bodies of like trusts committed to their care.

(Original.)

THE UNITED STATES NAVAL OBSERVATORY AND HYDROGRAPHICAL OFFICE.

M. F. MAURY, LL. D., U. S. N.,
Superintendent of the United States Naval Observatory, &c.

BY PROF. J. S. HUBBARD.

This Institution was founded by act of Congress, in 1842; the instruments and building were completed in 1844, when the charge of the new establishment was confided to the present Director, Lieut. M. F. Maury.

The Observatory is situated in the intersection of the lines of D and Twenty-fourth streets, on the public reservation formerly known as Camp Hill. The main building is surmounted by a revolving dome, and has wings on the sides and in the rear, for the reception of meridian and prime-vertical instruments. The residence of the Director adjoins the east wing. There are eight rooms in the main building, occupied by the computers and others engaged in hydrographical duty; the larger astronomical instruments being located in the wings and dome.

Beginning with the west wing, we find therein a large and excellent transit instrument, whose telescope is seven feet long, resting upon the large granite piers that rise through the floor to a height of seven feet, and rest upon a massive foundation of masonry, deeply imbedded in the ground. Around these piers, as well as all others in the building, the floor is so constructed as to be nowhere in contact with them, thus preserving the complete independence of the instrument from casual disturbances, settling of walls, and the like. This instrument is used for determining the time; that is to say, for ascertaining the error of a clock assumed as the standard, and from which, when corrected, the true time may at any moment be obtained, as is done, for instance, every noon, when a signal ball is dropped from the flagstaff above the dome. The facility and accuracy of this determination of time are much enhanced by an ingeniously-contrived telegraphic registering apparatus, located in the same room, and worked partly by the observer and partly by the clock, and giving results liable to no greater error than a few hundredths of a second.

In the east wing is, first, a mural circle, consisting, as its name denotes, of a large circle, and telescope, mounted upon the face of an immense pier or wall of sandstone. This circle is five feet in diameter, and is graduated into degrees and five-minute spaces by marks beautifully cut in a narrow band of gold, set in the edge of the circle, the observer being enabled to subdivide these spaces to seconds by six microscopes attached to the pier at intervals of 60° around the circle, and always directed toward the graduated arc. This instrument is used for determining the latitude of the Observatory, as well as the distances of the various celestial objects from the north pole of the heavens.

In the same room is also a meridian circle—a compound instrument, formed by attaching a graduated circle to the axis of a transit instrument like that in the west wing, and thus enabling the observer to do the work of both transit and mural at the same time. The specimen before us, however, is of lesser power than the other two instruments, and cannot therefore fairly cope with them.

In an adjoining room, a large number of chronometers are kept and rated for the use of the Navy.

In the south wing is a peculiar instrument, called the "prime-vertical transit," admirably adapted for delicate researches in a limited portion of the heavens; and further on is a splendid meridian circle, temporarily mounted in the east and west directions, but intended for ultimate location in the meridian. For want of sufficient observing force, both these instruments are at present unemployed.

In the dome is situated the equatorial instrument, whose telescope is fourteen feet in length, and object-glass nine and a half inches in diameter. This is employed for miscellaneous observations, chiefly of new planets and comets, and by its help two new asteroids have been added to the large number discovered of late years.

But this establishment is not only an Observatory, it is also a hydrographical office, and it is from this latter department that have emanated those wind and current charts and sailing directions that have already proved of such great advantage to the commercial world. These charts are founded upon a rigorous induction from facts collected from every available source. Log-books innumerable have been and are still being overhauled; the track of each ship carefully traced upon a chart, and the direction and force of the daily wind distinctly noted. Whenever a sufficient number of these tracks has been obtained in any given part of the ocean, the figures are carefully studied, in order to learn for each season the prevailing winds and their average force. It is easy to see that upon precisely such a foundation, and upon no other, must rest the true theory of atmospheric circulation. Moreover, the tracks of the ships are grouped together in such a manner as to form time tables for all the well-beaten paths of the sea. By the ingenuity here displayed, mile-stones and finger-boards have been set up on the sea; for, really, by means of these tables, every ship can tell how much she may happen, during any day of her voyage, to be behind time or ahead of time. They show the difficult parts of every route, and the way to go. The great highways of the sea, like those of the land, have their up-hills and their downs, their good parts and their difficult; and this grouping shows it all.

In consequence of the knowledge already gained concerning the winds and currents of the sea, the navigator on a long voyage is taught how to go around difficult regions, to avoid calms and adverse winds, and to find others that are fresh and fair. By them, canvas and the winds have driven steam and the propellers well nigh out of the Australian route.

Early in the history of these investigations, it was felt that an extended co-operation on the part of all maritime nations was necessary to secure a realization of the grand plan then in view—a plan aiming first at the establishment of a uniform system of meteorological and other observations over the whole ocean; and, secondly, at a uniform course of collation, reduction, and final discussion, of these observations. From this felt necessity originated the call whose answer was the celebrated maritime conference held at Brussels in 1853, and which was attended by delegates from Belgium, Denmark, France, Great Britain, Netherlands, Norway, Portugal, Russia, Sweden, and the United States. Their deliberations resulted in the adoption and recommendation to general use of a form of abstract log, admirably adapted to convey in a concise and convenient form the information derived from every navigator. This form has been generally adopted by all the commercial nations, and by their assistance materials are now being collected and digested for new and more complete wind and current charts. For, besides the direct result of the conference, by it all the nations represented were stimulated to greater activity in the pursuit of the physical laws of the sea and atmosphere, and a new era in science was inaugurated.

Evidence of the estimation in which the labors of the Observatory, leading to such a result, are held in Europe, is found in the fact that the rulers of the States most interested in commerce have made, or expressed their desire to make, an acknowledgment to the Director, of the value placed by them upon these labors. Titles of nobility have been offered or gold medals bestowed by nearly every nation of Europe.

A still more practical acknowledgment has been given by the three nations most interested in the seas—Holland, England, and France—each of which has established a bureau upon the plan of this office, especially to co-operate and assist in those observations and researches, of which the example has been set by the Observatory.

Such are the encouragements and favorable auspices under which the hydrographical labors of the Observatory are now being prosecuted, and we cannot doubt of the continued success of those studies which will render the path of the navigator even more sure and more rapid as his knowledge of the physics of the sea is multiplied.

Give thy heart's best treasures!
From fair Nature learn.
Give thy love—and ask not,
Wait not, a return.
And the more thou spendest
From thy little store,
With a double bounty
God will give thee more.—*Selected.*

CHRIST OUR SAFETY.—Luther used to say that there were three things on which he could not bear to dwell without Christ—his sins, death, and the day of judgment.

(Written for *The National Recorder.*)

THE UNITED STATES COAST SURVEY.

A. D. BACHE, LL. D., SUPERINTENDENT.

All civilized nations possessing a sea coast and an ocean commerce have recognised the importance and necessity of facilitating navigation and promoting the safety of commerce by all proper means, among which the most effective are accurate charts, light-houses, and sailing directions. When we consider the magnitude and extent of our foreign and coasting trade, the value of which is told by hundreds of millions, the thousands of mariners engaged in its pursuit, and the vast number of passengers annually arriving at and leaving our shores, we must perceive that it is not only an economical necessity, but our duty as a nation, to provide every means which science and practical skill can afford for pointing out the dangers to which this commerce is exposed, and for furnishing every facility for its successful prosecution. To accomplish these objects, the Coast Survey was instituted. It is designed to furnish accurate charts of the whole of the coast, showing the configuration and character of the land as well as of the sea-bottom within soundings, depth of channels, rocks, shoals and other dangers; to point out the positions for light-houses and beacons; to ascertain the character and course of the ocean currents along our shores; to develop the laws of the tides, of that force which directs the mariner's needle, and of the changes which take place at the entrances of our harbors, and to investigate all other questions the solution of which contributes to a thorough knowledge of our coast and its adjacent waters.

An attempt to organize a general survey of the coast for the purposes stated was made as early as 1807, when, on the recommendation of President Jefferson, Congress passed a law to that effect, which still remains the fundamental law of the Coast Survey, although on account of our hostile relations with Great Britain, and the subsequent financial difficulties of the Government, it did not go into effective operation until long afterwards. Mr. F. R. Hassler, who had furnished a comprehensive plan for the work, and who by his scientific attainments and his previous experience in the trigonometrical survey of Switzerland was eminently fitted for the task, was appointed Superintendent, and in 1811 went to Europe to procure the necessary instruments and standards of measure. After having been detained abroad on account of the subsequent war, he at length was enabled to commence the work in 1817, in the vicinity of New York. His labors were, however, suspended after the first year, owing to the want of appropriations, and for a period of sixteen years no progress was made, until the law of 1807 was again put in force in 1832, since when the work has been in progress without interruption. Mr. Hassler was again appointed Superintendent, and vigorously prosecuted the work until his death, in 1843. In the preceeding year, owing to the alleged slow progress of the work, an investigation was had by a Congressional committee, which resulted in a renewed approval of the principles and methods according to which the survey was carried on, and in the establishment of regulations amplifying the original law, by a board of officers ordered for that purpose.

At the time of Mr. Hassler's death, the Coast Survey had extended from New York Bay eastward to Point Judith, and southward to Cape Henlopen. He was succeeded by Prof. A. D. Bache, the present Superintendent, to whose high scientific attainments and administrative skill the country is indebted for the highly important results to navigation and science brought out, and the unparalleled progress of the work during the fourteen years of his administration.

On assuming charge of the survey, Prof. Bache saw the necessity of enlarging the scale of its operations, so that the work might be in progress simultaneously at different points of the coast. Justice to the different States of the Union, and the necessities of commercial intercourse, required it; and it was shown that much would be gained in ultimate economy, as the results have since abundantly proved. His views were adopted, and appropriations were gradually increased, until the most advantageous working scale was reached. When, after the acquisition of California, an extended commerce suddenly sprang into existence along an almost unknown sea coast, where the era of discovery had scarcely passed, the survey was extended to those shores with characteristic energy, and charts of the most important harbors and routes were given to the world in an incredibly short time.

The present scale of annual appropriations for the Coast Survey is as follows:

For the Atlantic and Gulf Coast	$250,000
For the Western Coast - -	130,000
For the Florida Reefs and Keys	40,000

Besides some smaller items for repairs of vessels and other specific purposes.

The survey has been extended into every seaboard State and Territory of the United States. Taking all the operations into consideration, it is estimated that the Atlantic coast is more than half done, the Gulf coast is nearly one-third done, and that at the present rate of expenditure both can be completed in from ten to twelve years, by close economy and thorough efficiency of management. The comparison of progress and expenditure shows that the work, on the large scale of the present system is more economical than on the smaller scale of former progress.

It is obvious, that when a large portion of the earth's surface is to be delineated, the ordinary methods of surveying must fail entirely in giving even an approximate accuracy, for in them the surface is considered plane, and two north-and-south lines are considered as parallel, and everywhere equidistant from each other, while they actually converge, so that two meridian lines 100 miles apart in Florida would, if continued to Maine, be only 78 miles distant from each other. It is by the *geodetic* method of surveying alone, which takes into account the figure and dimensions of the earth, that accurate surveys of extended regions can be made. Such is the practice of the Coast Survey, of which but a brief outline can be given here.

After a careful reconnoissance of the country to be surveyed, for the purpose of determining the best plan of operations, a straight line of from five to ten miles is measured with all possible accuracy, by means of rods which are so combined of iron and brass bars as to be *compensating*, or retain the same length precisely at all temperatures. This measured line is the *base line* of a triangle formed by its two extremities with a third point opposite, visible from both; the angles in this triangle are next measured by means of a theodolite with great precision, and we are able to calculate by trigonometry the distances from the ends of the base line to the points opposite. Each of these distances becomes in its turn the base line of other triangles, which are so disposed as to extend along the coast, and cover it with a complete net-work, in which the relative positions of the points are accurately ascertained. The lineal measurement of all these distances would not only be very difficult and less accurate than the angular measurement, but in many cases it would be absolutely impossible, as in distances across the water. When the triangulation has been carried on thus for a few hundred miles, one of the triangle sides, in a convenient locality, is again measured with the rods, by which the whole series is thoroughly verified. Thus a base line was measured on the south side of Long Island, and a triangulation executed on it southward to Chesapeake Bay, when on Kent Island a base of verification was measured, which differed only four inches in five and a half miles from the length computed from the former base, through a chain of triangles 320 miles in length.

In order to fix the position of this network of triangulation on the surface of the earth, it is further necessary to determine the *latitudes* and *longitudes* of some of the principal points, and to ascertain the true bearing or *azimuth* of the lines joining them, (the angle which they make with the true meridian.) It will suffice here to say, that the best astronomical methods known are employed, and that in many respects new and superior means have been developed, among which we will only cite the chronographic or electrical method of recording time observations, and the method of determining longitudes by the electric telegraph. Depending upon the principal or primary triangulation, and checked by it, a network of secondary and tertiary triangles is formed along the sea coast, and extending up the bays and rivers. In this way are determined the geographical positions of a great number of prominent points, at distances varying from two to five miles, which thus form a sort of skeleton map of the coast, an accurate framework, into which the detailed surveys are fitted, and which secures us against that accumulation of error which would be unavoidable in the employment of the ordinary modes of surveying.

Next in order comes the topography. This is a representation on paper of the natural features of the country, the outlines of the shore, the irregularities of the surface; the forms and dimensions of hills,

forests, streams, rocks, meadows, towns, and villages, are all represented by certain conventional modes of drawing, well understood by those who make use of the maps. The drawing presents to us the surface of the earth, as it would appear to an observer from above it. The topographical maps are generally surveyed on a scale of one ten-thousandth of the natural dimensions. In localities where a great amount of detail is to be represented, such as large cities and their vicinity, a scale of 1:5000 is employed, while on flat and sparsely-settled ranges of coast a scale of 1:20000 is used. The extent of ground represented upon a single topographical sheet depends upon the scale. On a scale of 1-10,000, or about six inches to the mile, a square foot of the drawing represents about four square miles of the surface of the earth.

The topographical survey is carried inland as far as is required for purposes of navigation and for the defence of the coast.

The foregoing operations complete the landworks, with the addition of observations on the direction and force of the *magnetic needle*; from which the laws that govern it and its changes can be deduced, and the *variation of the compass* assigned in places where no observations can be had.

The hydrography embraces all the observations that have reference to the sea. The depth of water and form of the bottom are ascertained by numerous soundings, and specimens of the bottom are frequently brought up; which are minutely mapped. They exhibit channels, shoals, and rocks, with such accuracy that the navigator, in approaching the shore, may ascertain his position by the soundings laid down on the chart, when he is unable to discern the land. The true positions of the soundings are determined by angles measured with the sextant from the boat, or sounding vessel, upon signals erected at the shore stations, fixed by the triangulation, upon which the correctness of the work again depends. The tides are observed at the same time, in order to reduce all the soundings to the common level of mean low water. The rise and fall of the tides is carefully observed in many localities, for the purpose of investigating the laws that govern them, in order to make predictions, or *tide-tables*, for the use of mariners. In these observations, a self-registering tide-gauge is used with great success and economy. The direction and force of tidal *currents* are observed and laid down, so that allowance may be made for them in entering a harbor.

An important branch of the hydrography is the exploration of the *Gulf Stream*, that remarkable feature of our ocean boundary, which, by its warm and dark-colored waters, declares at once to the mariner his approach to our shores, and the rapid current of which he must not fail to take into account in his navigation. The explorations have reference to the temperature of the stream at different depths from the surface to the bottom, in different positions, and to the velocity and direction of the current. The instruments and means employed for the purpose are of a very interesting nature, but cannot be described here.

OFFICE WORK.

The observations and charts made in the field are at the close of each season's work sent to the Coast Survey Office, in Washington, where they are combined, to form the charts. The triangulation and astronomical observations are subjected to a double computation, first by the observers, and next by the computers in the office, in order to secure perfect accuracy and faithfulness. The topographical and hydrographical sheets are combined, and reduced drawings are made on scales suitable for publication. A connected series of finished charts of the whole coast is projected, on a scale of 1-80,000; and preliminary charts, giving at once the most important information, are published as the work progresses, on a scale of 1-200,000. Besides these, local charts of harbors and bays are published on larger scales, adapted to the importance of the locality and the amount of detail to be shown. General coast charts are also published, on a scale of 1-400,000. When the reduced charts are drawn and verified, they pass into the hands of the engraving division of the office, where they are executed on copper, in the highest style of art. When the plates are completed, electrotype copies are taken of them, which serve for printing the charts, the original plates being preserved in the archives of the Coast Survey. The electrotyping establishment of the Coast Survey is quite extensive, and one of the most successful in the world. It was in successful operation several years before the process came into general use, and considerable advances were made in the art at this establishment. The charts are finally printed at the Coast Survey Office, and distributed to sale agents in the principal seaports. The prices are fixed at very low rates, so as to place a complete set of charts within the reach of every navigator. Provision has been made by Congress for the publication of the observations made in the progress of the Coast Survey, so as to place the data on which the correctness of the charts depends beyond the possibility of loss, and to submit them to the criticism of the world.

The operations of the field-work, which have been described, are carried on simultaneously at many different points on the coast, each division having its triangulation, astronomical, topographical, and hydrographical parties, all working independently, but upon the same system, so that in the end the whole will form a connected survey of our entire coast.

For conducting these operations, there are employed, exclusive of hands and seamen, thirty-seven civilians, of different grades, twelve or fifteen Army officers, and fifty officers of the Navy, a greater number of the latter being required for the vessels engaged in the hydrography. The first class forms a permanent nucleus of persons of scientific and practical ability, trained to the work, while the officers of the Army and Navy are detailed for the work, or withdrawn, as the exigencies of their respective services may require. All act under the immediate orders of the Superintendent, who directs all the details of the work, governs the movements of the parties, and controls their expenditure. Notwithstanding his laborious administrative duties, the Superintendent engages personally in active field-work.

The progress of the work from year to year is detailed in the annual reports of the Superintendent to the Treasury Department, to which the survey is attached, as connected with the commercial interests of the country. The liberality of Congress in publishing and largely distributing these reports has greatly tended to increase the public interest in the work.

From a table given in the latest of these reports, we glean the following statistics: An area of 41,000 square miles has been triangulated, and 7,000 geographical positions of points have been determined; 675 original topographical sheets have been surveyed, covering an area of 15,500 square miles, and delineating 33,000 miles of water line; 600 hydrographical sheets have been surveyed, 4,900,000 soundings made, and 7,000 specimens of bottom preserved; 64 finished charts, and 277 preliminary charts and sketches, have been published, and 67,000 copies of the same have been distributed.

A list of discoveries and developments enumerates no less than 142 instances in which channels, hidden dangers, harbors of refuge, changes in bars, or other important information previously unknown, has been brought out by the Coast Survey, showing in a striking form its utility to commerce and navigation.

A very general acknowledgment of the effective and thorough manner in which this great work is conducted has not been wanting. Authorities connected with commerce and navigation, as boards of trade, marine societies, and insurance companies in all our principal seaports, have repeatedly testified to its great practical usefulness; and scientific bodies and leading men of science, at home and abroad, have acknowledged that in point of scientific execution the Coast Survey is in the foremost rank among similar work, and has largely contributed to the advancement of various branches of applied science.

EDUCATIONAL.

EDUCATION IN THE DISTRICT OF COLUMBIA AND IN WASHINGTON CITY.

BY Z. RICHARDS, A. M.,
Principal of the Union Academy, Washington, D. C.

Many commendable efforts have been made, with some degree of success, in the city of Washington, to establish a thorough system of public education. Great difficulties generally arise in every place, when great and good enterprises are undertaken; but very few, if any cities, have been obliged to encounter so many and such discouraging difficulties, in providing suitable means for the proper education of its youth, as Washington. In this, our National Metropolis, the friends of education have felt that what they do in this enterprise should be so done as not only to provide the means for educating all its youth, but to establish such a system of education as would be an honor to the capital of our country, and a model for other cities. We will not here attempt to enumerate the difficulties in the way, for they are many; and some of them are evident to every care-

ful observer. Many of them, however, have been overcome by the indefatigable labors and perseverance of a few high-minded friends of the cause.

The first "free school" in this city was established in 1805, when the population was not over 5,300, and when all the burdens and difficulties incident to new cities were pressing upon the people, in addition to an unusual expense of fitting up a city of magnificent distances, to become the most magnificent capital of the world. It may be well for our readers to remember that the General Government, which possesses undisputed control over the District, and has always shaped and directed its affairs so as to best accommodate itself, without any or with very little regard for the wishes of the inhabitants, has never seemed to recognise any obligation to provide for the intellectual or moral wants of its rapidly-increasing population; of a population increasing almost entirely through the demands of the Government, and not from any commercial or other usual facilities in other rapidly-growing cities.

From the enactment of the first school law, in 1805, till the year 1844, only two schools had been opened as free schools; and these, it was generally understood, were designed for the poorer children, who were unable to attend pay schools. Some children of this class, of good capacity and uncommon aptitude for learning, were educated in private schools and colleges at the public expense. During this period, and since, several excellent private schools and academies have been sustained, and have furnished the very best opportunities for thorough instruction.

In 1844, the old law was supplanted by a new one, substantially the same as it is now, which provides for a system, somewhat like that of Massachusetts and other New England States. Though this new law resulted in the establishing of several new schools, which have increased school privileges, yet the schools have never been sufficient to meet the wants of our city; for the largest portion of the children, who are educated at all, are educated in private schools.

Public schols have not been generally popular; the more wealthy classes and families, claiming to belong to the higher ranks of life, have not patronized them; in fact, there has been no room for more scholars in the public schools since their great improvement under the new law; and the means have not been sufficient to increase materially their capacity and their efficiency. Within the last few years, however, the public schools have increased more rapidly in their popularity than in their accommodations.

Among the instrumentalities which have been at work to increase the efficiency and popularity of the public schools, we think may be placed the "*Columbian Association of Teachers*," which was organized about ten years ago, at the instance of a few private and public teachers, who have been the efficient agents in sustaining its meetings regularly ever since.

The lectures and discussions before the Association have furnished an excellent, and, in fact, almost the only opportunity for the teachers of the city to make themselves acquainted with the most approved methods of teaching and of managing schools. The most successful and efficient teachers of our public as well as private schools have been the most constant attendants upon its meetings; and, in fact, it may be said that the general influence of the Association, both upon the teachers and the community, has materially benefited all the schools, by elevating the standard of instruction, and by awakening a deeper interest in the cause of education among the people. Through the agency of this Association, about one year ago, a census of all the children of school age was taken; the report of which shows that there were then in the city 10,697 children between the ages of 5 and 18; 3,228 of whom were in private schools, 2,400 in the public schools, and 5,069 in no school; and that all the public schools were full; and that a large portion of children, not in school, were not able to pay for their instruction in private schools, and were consequently shut out from any proper means of education. The character of the public school teachers is much better than the public generally suppose; and these teachers are deserving of higher appreciation and of better school accommodations than they now have. Again, there are no better teachers in our country than some who have charge of some of our private schools; but a high character cannot be claimed for all of the more than eighty private schools in our city, for very many of the teachers of these schools have assumed their positions, not because they are qualified for them, nor because such schools are demanded, but because they wish to use them as a means of living. It has been generally supposed that the city government has done all it could, with the means at its disposal, to increase the number of schools and improve the public-school buildings. We may in justice say that the number and character of the public schools, considering the amount expended upon them, are quite equal to any reasonable expectations. Still there is property and influence enough in the city to make them what their most ardent friends desire, "good enough for the best, and cheap enough for the poorest." The public schools ought to be so improved as to become the pride of our city and the model for our country.

We will close this hasty and imperfect sketch by reiterating an oft-expressed opinion, that the General Government, which *owns more than half* of all the property of the city, all of which is free from taxation, now owes it to the city as a duty to make a liberal appropriation for an immediate and thorough re-establishment of the public free schools.

THE FUTURE.—It has been beautifully and appropriately said, that "the veil which covers the face of Futurity is woven by the hand of Mercy.

LOVE AND PRAYER.—He who loves little, prays little; he who loves much, prays much.—*Austin.*

WAY OF LIFE.—If the way to Heaven be narrow, it is not long; and if the gate be strait, it opens into endless life.—*Beveridge.*

THE COLUMBIAN COLLEGE, WASHINGTON, DISTRICT OF COLUMBIA.

REV. G. W. SAMSON, D. D.

The Columbian College is located on the range of commanding heights north of the city of Washington, its lands, embracing about 50 acres, lying between Fourteenth and Fifteenth streets and extending from the Boundary street for about half a mile along the Fourteenth street road, the principal drive of the city.

The College was founded in 1819, and in 1821 it went into operation with a full Faculty and a large number of students. The importance of a University at the seat of Government had been deeply felt from the first, by leading public men. Washington, in his message to the First Congress, convened Jan. 7—8, 1790, presented the subject for their earliest consideration; and when, seven years after, owing to the pressure of other matters, nothing had been done, in one of his last messages he thus urged it again:

"Its desirableness has so constantly increased with every new view that I have taken of the subject, that I cannot omit the opportunity of, once for all, recalling your attention to it." The advantages of such an institution he states thus: "The assimilation of the principles, opinions, and manners of our countrymen, by the common education of a portion of our youth from every quarter." "The more homogeneous our citizens can be made in these particulars, the greater will be the prospect of permanent union." In his last will and testament he made the following bequest: "I give the fifty shares which I hold in the Potomac Company, towards the endowment of a University, to be established within the limits of the District of Columbia, under the auspices of the General Government, if that Government should incline to extend a fostering hand towards it." Even Mr. Jefferson, in his message of December 2d, 1806, urges upon Congress "the present consideration" of this subject. Mr. Madison yet more strongly and repeatedly urged the establishment of such an institution. In his message of December 5th, 1810, he asked the attention of Congress "To the advantages of superadding to the means of education provided by the several States, a seminary of learning, instituted by the National Legislature, within the limits of their exclusive jurisdiction, the expense of which might be defrayed, or reimbursed, out of the vacant grounds which have accrued to the nation within those limits." In urging his views of the advantages to be derived from such an institution, Mr. Madison presents the same reasons which influenced the mind of Washington: "Such an institution, though local in its legal character, would be universal in its beneficial effects. By enlightening the opinions, by expanding the patriotism, and by assimilating the principles, the sentiments, and the manners, of those who might resort to this temple of science, to be redistributed in due time through every part of the community, sources of jealousy and prejudice would be diminished, the features of national character would be multi-

306

"Mercury" Thurs. Jany. 5 - 1860
(Oxford) Miss.

SPECIMENS OF SOILS FOR ANALYSIS.

BY E. W. HILGARD, STATE GEOLOGIST.

To the Editor of The Mercury:

The importance, to the practical agriculturist, of a correct knowledge of the properties of his soil is now so well recognized that, in the older States, it has already become a common practice with land-owners to have their soils chemically analyzed. The expense thus incurred by individuals is so great and so disproportionate to that which is involved in a general agricultural survey of a whole State, that the examination of soils for the benefit of the agricultural public generally, has justly come to be ranked among that class of internal improvements which must claim State aid. Mere desultory analyses of soils collected here and there, without reference to any uniform system, may be multiplied into thousands and tens of thousands, and yet fail to furnish that knowledge of the distribution, extent and character of the several kinds of soil which agriculturists ought to possess, in order to enable them to judge of the intrinsic value of the lands they cultivate, or intend to purchase; while that object may be readily attained by means of a few hundred analyses, when made in connection with a systematic field survey, the object of which is the collection, not only of specimens of soils, but also of all the experience heretofore had in reference to them by agriculturists tilling them. The points in regard to which the several soils require to be investigated; their faults, as well as their good qualities, so far as experience may have developed them, are thus indicated to the investigator, whose personal examination on the spot and subsequent analysis, will then enable him to suggest the remedies. It is obvious, however, that an analysis alone can be of little service, and may even grosely mislead, unless the specimen represents correctly the average soil of the field or district where it is taken. It is often by no means easy to fulfill this essential condition; and fatal errors in this respect are so frequent when specimens are taken by inexperienced observers, that numerous disappointments and doubts as to the practical utility of analysis of soils have arisen therefrom.

I frequently receive specimens of soils from individuals desiring analysis; more frequently still offers are made to send specimens of soil, and instructions are asked how to take them. Although, as a *general* thing, it is desirable that they should be collected by the investigator himself, yet, where the effective force of so great a work consists only of one person, such aid is too valuable to be declined; and it is my desire, in this communication, to give such directions to those who may desire on examination of their soils as will enable them to take specimens in conformity with the general plan, in order that such investigations may form a useful part of a systematic whole.

For the present, as a rule, it is intended to analyze only *virgin* soils and sub-soils (*i. e.* such as have not been cultivated, but are in their original condition) The State of Mississippi is so young that the history of almost every field can be gathered from its owner; hence, if we but know the *original* composition of the soil, we shall readily be enabled to judge of the changes it may have undergone in each particular case since it was taken into cultivation. Exceptions to this rule will of course be made in particular cases, where important *general* truths may be gleaned from the examination of a cultivated soil; as, for instance, when the cultivation has brought about the rusting or blighting, or some other striking peculiarity in cotton or other crops. Specimens of such soils, together with the proper data, will be especially welcome.

It might seem superfluous, in speaking to agriculturists, to give a definition of the terms *soil* and *sub-soil*; yet, these words are sometimes used in a manner somewhat indefinite. I have frequently been told of the occurrence of "soils" twenty or more feet underground; on the other hand, it is sometimes said that there is "no soil" in some thickly wooded, or grassy region, simply because the surface layer may not be suitable for agriculture. Properly speaking, in its most general acceptation, the term soil implies the *surface stratum of earthly material, as far as the roots of plants reach*, no matter whether it be sand or potter's clay, or, as in most cases, a mixture of the two.

Now, since the roots of different kinds of plants penetrate to very various depths, and since, moreover, in most cases a rapid change in the character of the material (as to color, heaviness or lightness) takes place as we proceed from the surface downwards, it is evident that, according to the above definition, the term *soil* may imply a great many different *average* materials, even *on one and the same spot; according to the plant to whose soil we refer.* When we speak of the soil with reference to Bermuda grass, we do not necessarily include anything more than a surface layer two and a half to three inches in depth; whereas, in alluding to forest trees, we necessarily take into consideration a layer of several feet, from the surface downwards. Nay, in the latter case, it may happen that the "soil" thus alluded to is quite independent in its character of that which in cultivation would form the arable soil of our field, which may be entirely *above* the stratum in which the roots of trees is fixed.

This distinction is of the highest practical importance. Agriculturists are accustomed to judge of the quality of lands by the natural vegetation they find upon it; and they rarely direct their attention to anything more than the forest trees. Yet, these are for the most part indicative rather of the character of what, in the *agricultural* sense, is termed the *sub-soil*, than of that of the surface stratum usually turned by the plow in the shallow tillage prevailing at present; which may be of a totally different character. As a general thing, the forest growth, when considered not only with regard to the *kind* (species) but also to the *form* and *size* of the trees, is a very safe guide in judging of the quality of land; but it may not unfrequently *lead to grave mistakes, unless a proper examination* of the character of the soil and sub-soil be made at the same time.

Thus, in the pine hills of South Mississippi land is frequently selected on the faith of some large black-jacks scattered among the pine, in preference to adjoining tracts, where the tree is wanting; yet, on cultivation, oftentimes there is not the slightest difference perceptible in the yield of the two kinds of land; and where this is the case it will generally be found that the soil which caused the black-jack to grow—a fine yellow loam—lies *deeper* than the three to five inch tillage which the land receives—say at eight or ten inches—while the soil above it, which the plow has turned, does not in any manner differ from that of the adjoining pine land, as is proved by the identity of the smaller plants or herbs growing on both.

Cases analogous to this are very common on the sea-coast of Mississippi and in the southern river counties. In the last named region the abundant growth of the poplar on the hillsides, and often on the tops also, has produced the impression that the soil is rich in *lime*, and will not, therefore, be benefitted by the application of that substance; whereas analysis shows that the usual *soil proper* of that region has by no means an over-dose of that substance, but may be essentially benefitted by the application of the calcareous marl which forms the *body* of the hill and is found on the hillsides and high ridges but not generally on the surface of the level tracts.

These examples may suffice to show that before judging of the character of a soil by its forest growth, we must make sure that it is really the average *arable soil* in which their roots are buried; and we should also pay special attention to the character of the smaller plants which may grow on it, whose depth of root approaches more nearly to that of our cultivated plants.

If the term soil, as to its practical import, is dependent upon the kind of vegetable under consideration, the same is true no less with reference to the subsoil, which is necessarily dependent on the first.

In the common parlance of the agriculturist, however, who considers them chiefly with reference to the plants he cultivates and his means of tillage, these terms assume a definite meaning in that he designates as *soil*, whatsoever he usually turns with the plow, and, as *sub-soil*, what lies beneath. It is evident that inasmuch as, in this country, the depth of tillage on the same kind of land varies from three to twelve inches, to use the term in that case would be to use with an idea absolutely shapeless and intangible, unless referred to the practice of some particular individual.

In the large majority of cases we find, in examining soils in their natural place, that a sensible change of character takes place at a moderate depth—say from three to twelve inches; about the usual range of the plow. If, therefore, as a rule, in speaking of arable soils, we designate as *soil* the surface layer down to the point where a perceptible change takes place, and, as *sub-soil*, what lies beneath, we shall in most cases find these subdivisions to coincide very nearly with what, in a proper system of tillage, becomes the *sub-soil in the sense of the agriculturist.*

In the soils of the prairies, flat-woods, sea-coast marshes, as well as in those of some of our larger bottoms, frequently no perceptible change occurs at a less depth than eighteen to thirty inches, and sometimes more. In cases like these the sub-soil *proper* is oftentimes of little importance to the agriculturist; it will be sufficient for him to be made acquainted with the properties of his *soil proper*, and with the fact that it is the same as far as his plow reaches; or, in other words, that *his sub-soil* (in the agricultural sense) *is the same as his soil*. In such cases, as a rule, I take a specimen to the depth of *twelve inches*, and mostly also a specimen of the *sub-soil proper* at whatever depth it may occur. The latter specimen is not necessarily intended to be analyzed; an examination of its physical properties may be important with reference to drainage, resistance of land to drowth, etc.

On the other hand, when the surface layer is of no greater thickness than a few inches, it would be useless to examine *that* layer by itself, inasmuch as few would be likely to restrict themselves to such shallow culture. The tillage would necessarily mingle with it a few inches, at least, of subsoil. Presuming that culture to a less depth than *six inches* can hardly lay claim to being considered rational, I have adopted as a rule to take no soil shallower than the above, save, perhaps, in some particular cases, in which great and important differences between the two layers renders a knowledge of their peculiarities specially desirable.

In all these cases, as well as in those where the change occurs *below* six inches, specimens of *sub-soil* have also been taken, viz: from six inches, or more, below the surface, down to 15 to 18 inches, according to circumstances. These data—the depths at which the soil and sub-soil, respectively, were taken—will always be recorded with the analysis; each one may therefore judge for himself as to which of the layers analyzed corresponds to the soils and sub-soils his particular practice may have produced.

In taking specimens a spot ought to be selected which insures a normal average of the tract, or kind of soil; having the usual growth of timber; not trodden down by cattle, washed by the rains, or covered with stagnant water, etc. Dead leaves, or grass sward, ought to be *lightly scraped off* with a spade or hoe; but no part of what fairly belongs to the soil. A square pit may then be dug with the spade, to the depth of eighteen inches, or thereabouts; the earth thus dug out is not used. One of the vertical sides of the pit is then scraped off clean with the edge of the spade, or a knife, so that the line of division where the soil passes into sub-soil may be clearly seen; the depth is measured and noted. One or two cakes are then cut off with the spade to the proper depth, as above defined; these are then broken up and thoroughly mixed on a sheet of paper, as many of the roots, etc., being picked out as may be convenient. From two to three pints is the quantity usually taken, in order to allow of duplicating the specimens. The sub-soil is similarly collected. The two earths are then put in paper packages or bags, and properly labelled, giving the following data: Locality, section, township and range; county; upland, bottom or hammock; on what creek or stream; timber growing on or near the spot; other plants, if known; change of soil to sub-soil; *at what depth*; at what depths *taken*; what lies beneath the sub-soil if known; general character of the *neighborhood*, hilly, level, prairie, etc.; is there much land of the character of the specimens; what has been your experience in its cultivation? All other peculiarities, not mentioned here, which you may think of.

It may not be found necessary, in many cases, to subject specimens fo soil thus sent to a complete analysis. Soils of the same character may be already on hand, undergoing examination, or the specimen may be the same, or vary only very slightly from others already examined. Otherwise the soil will in due course of progress be itself subjected to analysis. The result, with such suggestions as may be prompted by the examination, will be communicated by letter, free of charge.

Inasmuch as each analysis of soil, to be of any practical value, requires for its pratical value, requires for its performance *at least three days' time*, on an average; it is obvious that judgment must be exercised in the choice of analysis to be made, more especially as at present, a single person is charged with the field examination as well as with the analy-

sis of the soils of the whole State. The analysis of such specimens as represent the average soils of *large districts* will, of necessity, be attended to by preference; and those alone will amount to several hundreds. But it is not in all cases that a *complete* analysis, as above referred to, is necessary in order to suggest the means of improvement; and I therefore invite those interested in the progress of rational agriculture to transmit to me, at the office of the Agricultural Survey, at Oxford, the characteristic soils and sub-soils of their respective regions, collected in accordance with the above rules.

400

UNITED STATES COAST SURVEY.

[From the North American Review for April, 1860.]

G. S. Gideon, Printer, 511 Ninth street, Washington.

401

THE UNITED STATES

COAST SURVEY.

REVIEW

OF A

REPORT OF THE SECRETARY OF THE TREASURY,

COMMUNICATING, IN ANSWER TO A RESOLUTION OF THE SENATE, A REPORT SHOWING THE AMOUNT EXPENDED AND THE PROGRESS MADE IN THE COAST SURVEY.

SENATE, 35TH CONGRESS, 2D SESSION. EXECUTIVE DOCUMENT No. 6.

[From the North American Review for April, 1860.]

[Published by Crosby, Nichols, Lee & Co., Boston.]

1860.

Blank page retained for pagination

THE

UNITED STATES COAST SURVEY.

[From the North American Review for April, 1860.]

ART. VII:—*Report of the Secretary of the Treasury, communicating, in answer to a Resolution of the Senate, a Report showing the Amount expended and the Progress made in the Coast Survey.* Senate, 35th Congress, 2d Session. Executive Document No. 6.

We have, on two previous occasions, introduced the subject of the Coast Survey of the United States to our readers: first, with a view to make it generally known, and afterward to aid in securing it from a change of plan, or of administration, which, if accomplished, would have lessened, if not destroyed, its usefulness.

On the first of the occasions referred to, we gave the early history of the undertaking, and described the difficulties, dangers, and delays with which it was attended; we explained its merit and utility; and, without enlarging upon the purely scientific and technical parts of geodesy, we aimed to show that the geodetic is the only method by which the survey of an extended region of country can be safely conducted, and thus that it was entitled to the cordial support of the government and the country. The second notice of the Coast Survey to which we here refer, was written for the purpose of protecting it against attacks which threatened its character, rather than its existence; and then, also, it was necessary to say something concerning trigonometrical surveying, in order to prove that there are no

cheap and rapid expedients by which to produce those results that are the rewards only of profound learning and patient labor.

Eighteen years have elapsed since the last of these papers was written, and now we resume the subject, not to support the Coast Survey, but to record its achievements; not to defend science, but to show how fully science can vindicate itself, when it is allowed full scope for its development.

Previously to 1844, owing to circumstances long since buried in the past, the Coast Survey, though it was in active operation from the year 1832, had not been free from embarrassment, having had to struggle not only with the difficulties naturally attending the setting on foot so great an enterprise, of which the advantages were not immediately apparent, but also with difficulties pertaining to its internal organization, which affected its atmosphere somewhat like a "continual dropping in a very rainy day." But sixteen years of unremitting successful labor have wholly altered the aspect of its affairs. The grateful task is before us of placing under the observation of our readers some of the results which justify Sir Roderick Impey Murchison in saying, in his address before the Royal Geographical Society, that "the very efficient manner in which the Coast Survey of the United States is conducted by Professor Bache could not fail to make it one of the most *perfect exemplifications of applied science of modern times*," and in speaking of the Annual Reports of the Superintendent as "encyclopædias of great value." This task we shall perform briefly.

The actual progress of this enterprise is, in a great measure, told only by statistics; the number of sheets in its geographical register, both of topographical and hydrographical drawings; the extent of its triangulations, in square miles; the number of its various astronomical, magnetic, tidal, and other observations; its calculations and reductions; its written records in all its manifold departments; its engraved plates, and printed and published maps; all these, brought into comparison with the amount of money expended, and the number of persons employed, furnish the means of testing its working capacity, and of forming an estimate of the fidelity and industry of its agents. But views based upon statistics merely, and presented in arithmetical and tabular forms, though

precise and determinate, are not very attractive to the general reader. We propose, therefore, to take a more popular method of exhibiting the gradual expansion of the Coast Survey to meet the rapidly increasing demands upon its labors; and subsequently to point out some of the most striking instances of the unforced co-operation, resulting from the execution of its strict duties, that has grown up between this institution and other branches of science, as also of art,—which last Mr. Worcester, in his great dictionary, has justly defined to be "applied science," and not something "opposed to science," as it is defined by other lexicographers.

The death of the former Superintendent of the Coast Survey, Mr. Hassler, occurred in 1843; and during the same year, by direction of Congress, a plan for the conduct of the Survey, and for its organization, was prepared by a board of officers appointed for the purpose, in which plan the scientific methods employed by Mr. Hassler were fully recognised as the proper basis of the work, while the details of its execution were carefully systematized and improved by the experience of the preceding ten years. The death of the gentleman who alone had controlled the operations of the Survey up to this time, the reorganization, the accession of a new Superintendent, and the rapid extension of our territorial limits, ensuing almost immediately after Professor Bache's appointment, all combined, gave rise to an entirely new state of things, and created an epoch from which are dated the changes that have given to the Coast Survey its present reputation of being one of the most remarkable examples of modern applied science. It was most fortunate for the country that a man of Mr. Hassler's learning, ability, and suitable preparatory education, was present to give a right direction to the views of the government when the Coast Survey was founded; and no notice of the work to which he remained faithful through thirty-five years of varied fortunes ought to omit a passing tribute of respect to his memory and services. It was equally an advantage to the Survey that it found in his successor one not only fully qualified for the post by previous pursuits and by natural endowments, but one who was imbued with that spirit of active, vigorous enterprise which was requisite to meet the demands of Congress and the country.

The earliest step towards a more comprehensive scheme of operations was to divide the whole of the Eastern sea-board, including the Gulf of Mexico, into nine sections, comprising a nearly equal extent of shore-line, with the intention of prosecuting the work separately and simultaneously in as many of these sections as the appropriations would permit.

Previously, the work, proceeding eastward and southward from a single base, measured on the south side of Long Island, had been confined to a few of the Central and Eastern States, and had embraced no other inland waters than Long Island Sound and its harbors, the waters connected with the city of New York, and Delaware Bay and River. It would seem to have been the original purpose to continue the same lines, measuring occasional verification-bases, and thus to proceed by regular and unbroken connections along the whole extent of the coast. We say this without censure; it was the method adopted in the great European trigonometrical surveys. The ordnance survey of England was begun sixty-nine years ago; the trigonometrical survey of Scotland has already occupied more than fifty years; and it required twenty-two years to complete the survey, even within the narrow limits of Ireland. On the Continent, the application of this *lente ac paulatim* principle is quite as conspicuous. The surveys of France have been in progress nearly a century; those of Russia more than thirty years; those of Prussia, Austria, and other States, from thirty to seventy years; and they are all still incomplete, and in some cases suspended. These facts must be borne in mind, in order to make a right estimate of the effect of a change of plan, by which the operations of the Survey could be carried on just as many times as fast as the increased number of sections; that is, *nine* times as fast before the acquisition of Texas and California, and *eleven* times as fast subsequently to their accession. Nor does this statement comprise the whole of the new views contained in the first report of the present Superintendent. By the division into sections, not only were the fields of work multiplied, but the different processes of the Survey, so far as not incompatible with one another, were to be carried on simultaneously; and further, the preference was to be given to those processes which circumstances might render the most desirable.

Each section being made the scene of operations which for a time were to be independent, the preliminary step was to measure new bases. As the triangulations extended, these bases became bases of verification for the adjoining sections. Thus the greatest latitude was allowed for the selection of sites for bases, and for the most favorable disposition of the triangles; and at this present time the combination of many sections has united most parts of the Eastern coast of the United States into one comprehensive scheme of triangulation.

The adaptation of this mode of enlarging the work to the Southern coast formed one of its chief recommendations. The inaptitude of that level region for triangles with large sides was apparent without the trouble of a reconnoissance, and it was a question, started early in the history of the Survey, how this obstacle was to be overcome. The most obvious expedient was that employed in the northern section of the great meridional arc of India, where it crosses the flat territory of the Doab. Costly edifices of masonry, with walls five feet thick at the base, and two at the summit, are erected at each of the principal stations, and their height, about fifty feet, is sufficient to command a view above the vegetation. Such expedients were in accordance with the former progress of the Survey, which, advancing in two directions from a central base, was necessarily slow. The value of permanent and conspicuous structures of masonry to designate points of primary triangulation is not underrated; but as a substitute for these, the Coast Survey avails itself of light-houses, churches, and other prominent and durable constructions. Fortifications have been very serviceable, not only for this purpose, but for planes of reference. These objects are not necessarily occupied as stations, but are observed upon, from surrounding positions, so as to be embraced in the network of triangulation, and compose a part of it. In general, temporary means of elevation have been employed, such as the high tripods, with independent stands for the instruments, first used in Delaware Bay by that distinguished surveyor and hydrographer, Mr. Edmund Blunt, the senior assistant of the Survey for the last fifteen years.

The plan of carrying on the operations simultaneously in nu-

merous distinct sections (making so many separate concurrent surveys) involved the necessity for the greatest attainable accuracy, without which the ultimate junction of the sections would have led the assistants to whom were assigned the subordinate triangulations, on coming to the end of their work, to exclaim, "What profit hath he that hath labored for the wind?"

The measurement of the *base line*, which is the starting line or first side of the network of great triangles composing the fundamental basis of the Survey, is a labor requiring as much as any other a philosophical regard to minute details, and long previous peparation. Upon its correctness depends the value of all that follows. This measurement is obtained from the frequent repetition of small measures: the problem, therefore, is, as far as possible, to remove all errors from the small standards, and to ascertain and allow for those errors which are unavoidable.

The principal source of error is change of temperature. The lines measured by the same bar in winter and in summer might differ very materially in nominal length. The difference in the original base of the Coast Survey, thus measured, might be about twenty feet, and, by a rough estimate, an error of twenty feet in this place would amount in one of the largest triangles to about one-tenth of a mile. Next to accuracy, expedition was to be regarded, simply because the number of measurements was so much increased.

Leaving out of the account the two preliminary bases measured by Mr. Hassler in 1817, there have been nine principal base lines measured since 1832, one of them by Mr. Hassler himself, and three by Mr. Hassler's apparatus, consisting of an assemblage of four iron bars, each two metres in length. The successive contacts of these bars in the process of measurement were optical, and made under a powerful microscope; while thermometers laid along the bar, and touching it, furnished the arguments for corrections for temperature according to experiments previously conducted and tabulated. Excellent results were obtained by this means; but the process was inexpressibly tedious, and the corrections for the expansion and contraction of the iron bars would now be regarded as approximations only. To secure despatch, and to re-

duce the multitudinous errors arising from variations in the state of the atmosphere in respect to heat, the present Superintendent applied the principle of compensation to an apparatus constructed in the office of the Coast Survey, under his direction.

Measuring-bars upon the compensating system were first used by Colonel Colby in Great Britain, and afterward by Mr. Borden in the Trigonometrical Survey of this State. On the present occasion, however, a principle not before applied was introduced in reference to the dimensions of the bars. It may be thus stated: Bars of brass and iron of the same dimensions will not, owing to their different degrees of conducting power and specific heat, heat equally in equal times; and, therefore, while changes of temperature are in actual progress, the system ceases to be compensating, although it finally becomes so when the changes cease, and the temperature is uniform throughout the system. This Mr. Bache corrected by giving to the bars a coating that made them absorb equally, and by proportioning the sections to each other, so that both would have the same temperature during variable temperatures of the atmosphere. To do this satisfactorily, it was necessary to make direct experiments upon the materials of the bars themselves, after having first arranged them approximately by means of the numbers from the books.

The bars (tied in *sets*) are covered with a double conical case of tin to keep the fluctuations of the temperature within moderate limits, and the supports on which they rest are covered with several thicknesses of imperfectly conducting material, for the same purpose.

The length of each apparatus (or *set*) is compared before and after final measurement, with a standard iron bar that had been tested in the Coast Survey office by means of Mr. Saxton's reflecting pyrometer. By this instrument, a change of the hundred-thousandth part of an inch in the length of the standard bar is perceptible. Finally, the contact between two sets of bars is made by a blunt knife-edge and a plane of agate, and a lever of contact at the ends of the bars is corrected by a level so delicate that several of its divisions compose a quantity wholly insignificant.

To the preceding description it should be added, that the bars

(regulated in size by the relative specific heat of the two metals) were heated above the highest temperature to which they could be exposed in actual use, in order to give them a *set;* a precaution at first overlooked in the compensation base-apparatus of the British Ordnance survey, but afterward resorted to from necessity. It will be readily perceived that this application of the lever of contact and level (first used by Bessel in the adjustment of standards of measure) has not only increased the delicacy and simplicity of the base apparatus, and diminished the work of manipulation, but also removed several sources of error. By the dependence upon *optical* contact, and the employment of a microscopic apparatus, to determine the distance between the compensation points, two different terms, each having its peculiar standard, are introduced into the measures. Such was the case in the British and Indian surveys, and Colonel Everest complained of the consequent liability to error, and the burdensome accumulation of petty corrections.

To sum up the foregoing details, we will now inquire, first, into the accuracy of the new base-measuring apparatus; and secondly, into its convenience for handling, and its general adaptability.

The remeasurement of a base of seven and a half miles in India differed 2.4 inches from the first measurement. In a base of seven miles, Dr. Bache found that this difference might be about half an inch, if all the errors were supposed to fall on the same side, which is highly improbable. The probable error in the actual remeasurement of one hundred and twelve yards was less than five thousandths of an inch, and the positive error in remeasuring one-third of a mile was nothing.

Secondly. The mechanical arrangements by which the apparatus is placed in position, raised and lowered, moved to the right and left, and produced in line to bring it into effectual contact with its follower and predecessor, are so complete, and such is the convenience of handling for transportation, that a mile has often been measured in a single day without fatigue; and, as an evidence of its adaptability, it is sufficient to say that it passes over ground varying three degrees in slope both ways, without the necessity for any addition to its ordinary means of adjustment.

Seeing the Coast Survey thus provided with a plan of operations

by which its work can be increased tenfold, or, in other words, by which the time required for its completion can be diminished in the same ratio; and also with a base-measuring apparatus, by means of which this plan can be carried into immediate and safe execution,—we will trace, in the most rapid manner, the progress of the Survey, from a period a little subsequent to the date of our last paper—that is, during the incumbency of the present Superintendent. In doing this, however, it is to be remembered that there is one element of work extraneous to the work itself; we mean, of course, money. The appropriations of Congress have been very liberal, though more might have been usefully expended than has been supplied. The purely financial statement will be included in the consideration of the economical management of its affairs.

The operations of the Coast Survey may be classified under the general divisions of field-work and office-work; and these two divisions are subdivided again into geodetics, topography, and hydrography, under the head of field-work; and into computation, drawing, engraving, map-printing, compilation of records and results, clerical labor, and scientific investigations, under the head of office-work. It is unnecessary to say, that each of these subdivisions receives a further partition in the assignment of duties to assistants of different grades, and to the scientific gentlemen, artists, and artisans attached to the Survey.

We have named the out-of-door work in the regular and prescribed order of its execution: first, the primary triangulation, which, in a hilly country, leaps over the intervening plains with great strides; beneath, perceiving with its delicate levels and plumb-lines the very nature of the geological strata over which it is standing; and above, holding commerce with the skies in the determination of its geographical positions, and of the varying directions of its azimuth; and followed or accompanied by the reticulations of the secondary and primary triangulations, which descend to the lower surfaces, and fill up the large intervals which the master workman leaves behind in his visual journeys through the higher regions. Next comes the topography, which furnishes a descriptive map of all places, and by means of its hachures (*hatchings*), and its accurately defined symbols, contains every

minute detail concerning the nature of the soil, the elevations and depressions, with their contours, the flora and productions, whether uncultivated or cultivated, and the plots of towns and cities, with their public institutions and open spaces. Resting upon the preceding follows the hydrography, which, sometimes leaving the land at a distance (as in the case of the Nantucket Shoals), depends solely upon conspicuous points of the primary triangulation, and is often compelled to continue that triangulation out of sight of land by using floating objects, such as small vessels and light-boats; and again, in harbors and rivers derives indispensable aid from the smallest objects, and the faintest features of topographical outline.

But this prescribed order has not been strictly followed. To have adhered to it closely would have trammelled the work, and retarded its usefulness. In July, 1848, instructions were issued for commencing in the tenth section (the coast of Oregon); and in 1850 the eleventh section (the coast of California) was embraced in the Superintendent's scheme of active work. Now, to have proceeded by regular stages in these almost unknown regions would have been utterly to neglect the urgent demands of commerce, and to expose human life to unnecessary risk. Accordingly, the land parties sent to Oregon and California were complete within themselves for all the operations of the Survey; and the water parties were directed to visit in rapid succession those parts of this hitherto little frequented coast which most needed attention, and to furnish with despatch coast-line sketches, independent geographical determinations, soundings, sailing directions, and, where requisite, harbor and river surveys. To meet these and similar wants, on both sides of the continent, as many as forty-three preliminary bases have been measured; and all the information collected in the course of the ordinary, or occasional and extraordinary pursuits of the Survey, is communicated as soon as received, through the newspapers, by preliminary sketches, and by pamphlets, supplied to the chart-sellers, to the Boards of Trade and Chambers of Commerce, for gratuitous distribution throughout the country. The mention of this flexible accommodation of the Survey to such necessities should never be forgotten, not only because it is a means of increased usefulness precisely suited to our political condition,

but because the apparent disproportion in the different parts of the work on the Western, as compared with the Eastern coast, might otherwise require explanation.

In 1844, there were two centres of work, one including the cost of Long Island and Buzzard's Bay, the other the entrance of Delaware Bay and the upper part of the Chesapeake. In 1845 this work was extended eastward and southward; a new centre in Albemarle Sound having been added, eight general and harbor charts were published, and the survey of the Gulf Stream was begun.

To avoid a tedious multiplicity of details, we pass next to the state of the work in 1849 and 1850. In 1849 the operations in the first section had reached the State of Maine; in the second section, from Point Judith to Cape Henlopen, the field-work was nearly completed, and the work of verification and publication was in progress; in the third section, the Chesapeake was completed, and the outside, or coast-line work, was begun; in the fourth section, a base was measured on Bodie's Island, and the Albemarle centre joined to it, and the outer coast on this parallel was begun; the Charleston harbor centre was established in the fifth section, and the Key West harbor centre in the sixth section; the work in Mississippi Sound was continued in the eighth section, and that in Galveston Bay in the ninth section. In 1850, there was added to the preceding the preparation of parties and materials for the work in the seventh section, the coast of Florida, and keys and reefs in part; and the work in the tenth and eleventh sections, on the Western coast, was satisfactorily inaugurated by a general hydrographic reconnoissance from Columbia River to Monterey harbor.

During the years 1855 and 1856 every section was the scene of active labor. In 1856 the work had reached Mount Desert in Maine, and Matagorda, at the mouth of the Colorado, in Texas; and had covered considerable portions of the coast of California, and of Oregon and Washington Territories, from San Diego to Puget's Sound and Hood's Canal.

A summary of the different steps of progress up to the year 1857, and including that year, shows that the work is certainly more than half done on the Atlantic and Gulf coasts, and the appropriations of every succeeding year secure a much more considerable

rate of advance than the average of the past. A comparison of the relative progress in the earlier stages of the enterprise has proved that it is more economical to conduct it on a large than on a small scale, principally on account of the division of labor, and the facilities for working on different parts of the coast during different seasons of the year. It is obvious that the sooner the entire results ot the Survey can be presented to the growing commerce and navigation of the county, the better. The extent of the coast being determined, economy and utility demand that all the means should be furnished, which, in the hands of its well trained, active, and intelligent officers, can hasten the time of its completion. A few years more will bring it to a close on the Atlantic and Gulf coasts, if a steady progress at the present rate is secured by the appropriations. We say this, however, without anxiety. Congress has manifested a uniform disposition to sustain the Survey, and to extend its advantages to the remote and border States. What the Survey has actually accomplished, and its reputation at home and abroad, have gained for it unlimited confidence and respect.

Throughout the period we have had under consideration, the publication of the charts has kept pace with the field-work; preliminary charts being published for each year's work, in advance of the elaborate and finished maps. As we have already said, local surveys of dangerous regions have been made, and sketches published in anticipation of the connected work; as, for example, of the Nantucket and Monomoy Shoals, Hatteras Shoals, the Frying-Pan and Cape Fear Shoals, Cape Roman Shoals, Canaveral Shoals, and others. The same course has been pursued in places affording special conveniences for commerce and navigation, and nearly half the harbors and most important inlets of the Atlantic coast have been surveyed, and made known in published charts. Every season, as the hydrographic work comes in, a preliminary chart is drawn and engraved, and the engraved plate receives new additions every year by the electrotype process, of which more hereafter. Charts of two hundred and thirty-five harbors, inlets, shoals, sounds, bays, and portions of the coast and of rivers, have been drawn, engraved, and published. The number of maps, charts, and sketches drawn within the year 1857 (our final date), or now in

progress, is ninety-five, and the number engraved, or yet in hand, is eighty-four. Of these, twenty-nine are first-class maps, twenty-six are preliminary charts, and twenty-nine are sketches and diagrams. The list of publications of the Coast Survey shows that one hundred and forty-eight sheets of this description may be obtained from the general disbursing agent, and the local agents in the principal marts of commerce. The number of copies distributed in one year, under the act of Congress and regulation of the Treasury Department, has been nineteen thousand seven hundred and ninety-five.

A few facts touching the cost of the Coast Survey, comparing it with itself at different periods, and with other similar works, may be not uninteresting. We have before observed, that, setting aside the desirableness of extending the Survey at once to all parts of the coast, a great saving both in time and money has been effected by the gradual increase of expenditure; and it may be added, that greater accuracy has been at the same time attained. To show the saving in money, we may compare the first twelve years of active operations, from 1832 to 1844, with the twelve years immediately succeeding. During the first of these periods, the amount appropriated and expended was seven hundred and sixty-six thousand one hundred and thirty-four dollars; and during the second, three million nine hundred and fifty-eight thousand three hundred and thirty-one dollars; that is, the expenditure for the last twelve years amounted to about four times that for the preceding twelve. Now, if we leave out of the calculation the improved observations on the tides, the Gulf Stream explorations, the magnetic and the meteorological observations, (to which there is nothing to correspond in the first of the periods under consideration,) and the additional office-work, arising from the reduction and investigation of all these observations, we shall find that the field-work during the last period was more than seven times as great, and the office-work more than ten times as great, as in the preceding period. Or it may be put thus: from 1832 to 1844, expenditures, 1; field-work, 1; office-work, 1;—from 1844 to 1856–57, expenditures, 4; field-work, 7.3; office-work, 10. Supposing the increase for an interval of twelve years to be gradual, both in expenditures and results, the annual increase in the former

would be thirty-three per cent., and the annual increase in the latter sixty per cent., showing again an economy of twenty-seven per cent. Thus it appears that the generous desire of Congress to confer the benefits of the Survey upon all parts of the Atlantic and Pacific borders, as soon as possible, has effected a vast gain in time and money. And it is also perfectly apparent, from the above comparison, that the limit of annual expenditures, beyond which it would be neither safe nor economical to go, has by no means been exceeded, and has not even been reached.

For a comparison with former surveys, we may turn to the costly enterprises of Great Britain, France, Austria, and Russia, and may thus not only qualify ourselves to form a just estimate of the method and economy with which our appropriations have been used, but may also see what a largess the liberality of kings and emperors bestows upon geodesy.

The whole amount expended upon the Coast Survey of the United States, up to 1857, was three million seven hundred thousand dollars, including land work and hydrography. At this date the land work and hydrography of Great Britain had cost twenty millions of dollars, and both were incomplete; the land and hydrographic survey of France had cost nearly ten millions of dollars; while during the preceding seventeen years the trigonometric survey of Austria had cost eight millions and a half. The measurement of the great arc from the mouth of the Danube to the northern boundary of Sweden, accomplished under the direction of the illustrious Struve, the completion of which was announced to the Academy of Sciences of St. Petersburg in 1852, occupied thirty-six years; but we have no means of ascertaining its real cost.

The Secretary of the Treasury, in an official letter, dated February 7th, 1849, states the comparative cost of our own and other geodetic work in the following language:

"I have taken some pains to inform myself in regard to the relative cost of this and foreign works of a similar kind. Of these, two of the most important works are those of France and Great Britain.

"The tertiary triangulation and topography of France cost on an average one hundred dollars per square mile, or fifteen cents and six mills per acre. This is exclusive of the cost of the great geodetic work by Delambre, Mechain, Biot, Arago, and others.

"The estimates in 1847 for the secondary triangulation and topography of the trigonometrical survey of Great Britain, commenced in 1791 by the Ordnance Corps, are at

the rate of one hundred and three dollars and eighty-one cents per square mile, or sixteen cents and two mills per acre. This is exclusive of the army pay of the ordnance officers, but inclusive of the pay of three companies of sappers, numbering three hundred and fifteen, employed upon the work. The near approximation of these sums to each other indicates that they are standards of comparison. They average fifteen cents and nine mills per acre, which is between twice and three times the cost of an acre of secondary triangulation and of topography taken together in the Coast Survey, as shown by the expenditures of 1847 and 1848.

"The surveys of Wurtemberg and Hesse-Darmstadt cost respectively twenty-five and twenty cents per acre.

"Similar data for the cost of the hydrography in foreign countries are not before me; but I may mention that the appropriations for hydrography alone, made annually by Great Britain as a contribution to the navigation and commerce of the world, have amounted in ten years (from 1837 to 1847) to more than four times the appropriation for the survey of the coast of the United States, land work and hydrography both inclusive; and this is besides the appropriation for the trigonometrical survey."

We have spoken of our Coast Survey with the praise it merits not without the glow of satisfaction which the contemplation of this noble work is suited to inspire, and, we may add, not without a sentiment of peculiar pleasure in seeing the philosophical spirit of Franklin reproduced in his great grandson. We have already cited the approving judgment of Sir R. I. Murchison, to which we might add the authority of the equally distinguished President of the Royal Geographical Society, Admiral William Henry Smyth, who said in his annual address of 1850: "The Coast Survey of the United States is a truly national undertaking, and has been most creditably conducted through all its various departments of science. I have studied the question closely, and do not hesitate to pronounce the conviction, that though the Americans were last in the field, they have (*per saltum*) leaped into the very front rank." We might, if necessary, furnish similar attestations from Arago, Schumacher, and Humboldt, who have given their unqualified approval to the conduct of the work. At home, also, the learned societies, as the American Academy of Arts and Sciences, the American Philosophical Society, the Franklin Institute of Pennsylvania, the Faculties of St. John's College, Maryland, and of the University of Virginia, as well as the Boards of Trade and of underwriters, the Chambers of Commerce, and other bodies interested, have been forward in proffering the most flattering testimonials.

But were we to stop here, we should leave our readers very im-

perfectly acquainted with the nature and whole extent of the valuable services performed by the Coast Survey, some of which are the direct, others the indirect, results of its regular operations. Among the direct results, the most prominent, perhaps, are the hydrographic discoveries and corrections which have signalized the progress of the work; and it is a noticeable fact, to which we call special attention, that these discoveries have been made, not in places remote and little known, as might have been expected, but in the very central seats and thronged highways of our commerce. A new channel, (Gedney's,) straighter and deeper than the channels before known over the outer bars of New York harbor, is the boon conferred upon our commercial emporium. In the beaten path of navigation to Europe from the Middle States, and upon the border of our own coast, a hidden, unsuspected danger has been discovered and marked out, "a very dangerous flat, and fatal, where the carcasses of many a tall ship lie buried"—Davis's New South Shoal. Massachusetts Bay, Buzzard's Bay, Long Island Sound, Delaware Bay, Chesapeake Bay, and, not to continue a dry list of names, almost all the harbors, rivers, and inlets upon the Atlantic coast, have been improved in their navigation, and that chiefly by the actual discovery of useful channels or of previously unknown perils. The list of the discoveries of this kind amounts to between one hundred and forty and one hundred and fifty. These benefits, however, constitute the proper and expected fruits of the work, but it is not a little remarkable that they should most abound in the places supposed to be best known, such as Ammen's Rock on Cashe's Ledge, Stellwagen's Bank in Massachusetts Bay, Blake's Channel in Delaware Bay, and Maffit's Channel in the harbor of Charleston, South Carolina.

The exploration of the Gulf Stream comes under this head. It affords the earliest indication of approach to our coast, along which it runs at such a convenient distance as to mark the line of transition from the waters of the ocean to those of the coast, and to warn the seaman to have his sounding apparatus in readiness, and prepare his anchors. And to so good an account has this invaluable warning been turned, taken in connection with the peculiarities in the form of the bottom on different parts of the coast,

that we are justified in saying that, of the frightful wrecks which have frequently occurred on the coasts of Long Island and New Jersey, few would have happened if the sailing directions of the Coast Survey for the port of New York and its approaches had been earlier in hand and strictly followed. These directions have been printed in a separate pamphlet for gratuitous distribution by the Life Saving Benevolent Association of New York.

The objects in view in the exploration of the Gulf Stream are not solely nautical, and for immediate utility; they are also scientific, and of general interest. The observations of Lieutenant George M. Bache—"whose life fell a sacrifice to his zeal in the discharge of his duty, and whose loss science was called upon to mourn, just as he was commencing, with his accustomed ardor, the investigation of one of the most interesting phenomena of our globe"—have been published elsewhere, and are regarded as of the highest value.

The Coast Survey has met all other claims upon its service, such as questions as to harbor improvement, and lights, buoys, and beacons throughout the Atlantic, Gulf and Pacific coasts; local surveys; data for every project for the advancement of commerce and navigation, and questions of naval and military defence. Upon this last subject, the eminent soldier at the head of the Engineer Corps employs the following language:

"For many years the Engineer Department has had no other resource than the Coast Survey, for the general information necessary for the determination of the sites of new fortifications. It has often been without other resources as to local topography and hydrography. It has been enabled, by this aid, greatly to expedite the construction of defensive works of the highest necessity; and I must not omit to add, that the operations of the Coast Survey have, on some occasions, by the kind consideration of the Superintendent, been specially arranged in the order of time, and in the manner calculated soonest to supply our necessities. * * *

"In relation to the improvement and preservation of harbors, it may be said, generally, that, great as the function of exhibiting the coast in its present state may be, a not the less important one is the detection of its disturbances; for only on the exact knowledge of these, (already found by the labors of the Survey to be great, various, and often threatening,) can any judicious precautions and remedies be founded."

A commission, of which Professor Bache is a member, has recently been appointed by the general government for the scientific examination of Boston harbor, and it will be indebted almost exclusively to the Coast Survey for the information on which its con-

clusions and recommendations will rest. Commissions, or councils, connected in a similar manner with this work, have been appointed for most of the important harbors and rivers, from Portland, Maine, to the St. John's and Apalachicola, inclusive.

We speak of the foregoing as the expected results, as the returns due to the public; and we may observe, that the usefulness of the exact measurements of the Coast Survey in relation to the frequent changes of our alluvial sea borders was pointedly referred to, and anticipated by us, in the last of the papers mentioned in the beginning of this article.*

Perhaps we ought also to place in the same class of expected results the contributions of the Coast Survey to those branches of applied science which are intimately connected with, or included in, the science of geodesy. We have already noticed the new base apparatus, with which the first step is taken. In the second step—the measurement of the angles of the primary triangulation—a change in the mode of observing has been introduced and steadily practised, which consists in keeping up the observations in all states of the atmosphere, when the signals are visible, instead of confining them, as before, to days when the signals present a well-defined and steady image. The aim is, to ascertain by trial (involving a discussion of the observations in connection with the changes in the appearance of the signals) the number of observations of this last kind, so as to reduce the probable error to what may be deemed the unavoidable errors of instrument and observer. By applying this mathematical test of the least probable error to observations made under such conditions as are not unfavorable and of frequent occurrence, the rapidity of the work has been increased, and its value enhanced rather than diminished.

Owing to the irregularly elliptical form of the earth, it is necessary to multiply independent determinations of the latitude of the points of main triangulation. For this purpose, the method of measuring astronomically differences of latitude by the zenith telescope, invented by Captain Talcott, late of the Engineers, has been employed for the first time for geodetical purposes. A description of this method, with examples from the Coast Survey, has been

*No. CXV, pp. 452, 453.

published in a handsome form (by order of the Topographical Bureau of the War Department) by Captain T. J. Lee, whose valuable labors while attached to the Survey were chiefly devoted to astronomical and magnetic observations. It appears from this publication, that the latitude is given by a single night of observation to a fraction of a second; and that in four or five nights it can be determined with the minutest accuracy of which astronomical measurement is susceptible. At the twelfth meeting of the Association for the Advancement of Science, Professor Bache made the remarkable statement, that, in the observation of the same stars, the same observers with different instruments, and different observers with the same instruments, brought out the same results. A comparison of latitudes deduced geodetically from a central point with the nice determinations of the zenith telescope, has led to the discovery of certain changes in the level, which could be attributed only to variations in the form and density of the materials composing the earth's crust. These variations are *similar* to those caused by the proximity of mountains, but had hitherto escaped notice. A similar discovery was afterwards made by Major General Colby, and appears to have been anticipated by La Place in the opinion given by him in the Chamber of Peers, in 1817, upon the topographical map of France: "If the latitudes of the extreme points (of certain lines) are observed, and the length of the seconds pendulum corresponding to these points measured, a great deal of light will be thrown upon the figure of the earth, and upon the irregularity of its degrees, and of gravity." To what extent this astronomical *divining-rod* may be used by geologists in deducing from differences of density or the want of homogeneousness of structure the nature of the underlying strata, is an inquiry which at present admits of only a speculative answer.

As in the latitude, so in the longitude, the Coast Survey has enriched what it touched; with this difference, however, that in the former it improved methods already known; while in the latter it has invented a new method, which now takes precedence of all others where it can be employed. To have ascertained the availableness of the electro-magnetic telegraph for the exact determination of differences of meridian, to have prescribed from experience the details of the process now known in Europe as the *Ameri-*

can Method, and to have invented the register for recording the observations, constitute a merit and a distinction which history will assign to the Coast Survey. The observations and the mathematical investigations belonging to this important undertaking were made under the direction of the Superintendent, by the late distinguished astronomer, Mr. Sears C. Walker. It has been shown that under favorable circumstances, and with due care in the use of the transit instrument, the astronomical difference of longitude between any two stations of a trigonometrical survey may be determined by telegraphic signals with a degree of precision of the same order as that with which the difference of latitude is determined, the inaccuracy depending upon the same causes that govern the deviation of the plumb-line. The French are engaged in the redetermination of the longitudes of their great trigonometrical survey by this American method of the electric telegraph.

We purposely avoid detailed descriptions of instruments and methods, in both cases, because we are dealing only with general results; but since the accurate determination of latitude and longitude lies at the foundation of all geography, and since most of the States through which the Coast Survey passes will undoubtedly avail themselves of the bases it is able to supply, to form correct maps of their own territories, under circumstance very favorable to economy and accuracy, it seems hardly possible to overestimate the value of these additions to the common stock of astronomical knowledge.

Leaving now the route we have thus far followed, we will turn aside from the regular work of the Survey, to consider for a moment its indirect and collateral relations with general science, and with applied science, or art. We shall find here some new and surprising proofs of the mutual connection of the physical sciences. We will present a curious instance of this connection, which recently occurred in the Coast Survey, and, after being communicated to the American Association for the Advancement of Science, was published by the Superintendent in the *American Journal of Science and Arts.* In February, 1855, Professor W. P. Trowbridge (known by his contributions to the meteorology of the Western coast) observed that singular curves had been traced by the self-registering tide-gauge at San Diego, on the 23d and 25th of December; and hav-

ing satisfied himself by an inspection of the meteorological records, and from the length of the curves, that the irregularities could not be produced by disturbances from storms, he decided that "there was every reason to presume that the effect was caused by a submarine earthquake." When the record sheet of the self-registering tide-gauge at San Francisco was examined, similar irregularities in the curves for the same days were found upon it. About the 20th of June, accounts were received from Japan of a violent earthquake that occurred on the 23d of December, in which the Russian frigate Diana was much injured. There were several shocks; the sea rose five or six times in a wave thirty feet above its ordinary height, overflowing the town of Simoda in the island of Niphon, and carrying houses and temples before it in its retreat. Yeddo was injured; the fine city of Osaka was entirely destroyed; and the whole coast of Japan suffered more or less damage. Having taken every precaution to obtain the most exact dates and incidents within reach, Professor Bache determined, first, from a comparison of the times, the rate of motion of the earthquake wave to be from 6 to 6.2 miles per minute, or between three hundred and sixty-three and three hundred and seventy miles per hour; secondly, by combining this rate of motion with the periods of oscillation, he determined the length of the wave on the San Francisco path to be between two hundred and ten and two hundred and seventeen miles; and thirdly, by applying a rule laid down by Airy in his *Tides and Waves*, he determined the mean average depth of the sea on the San Francisco path to be two thousand three hundred and sixty-five fathoms, or 2.68 miles, and the corresponding depth on the San Diego path two thousand one hundred fathoms, or 2.38 miles. Mr. Mallett, in the appendix to the fourth and last of his learned and able reports *On the Facts and Theory of Earthquake Phenomena*, to the British Association, copies largely from Dr. Bache's paper, and says: "It is, up to the present time, almost the only record of scientific pretensions of the phenomena of earthquake great sea-waves, and is a model for those engaged in tidal observations upon British or European coasts, of what is needed to make their results connect usefully with the requirements of those occupied in seismical inquiry." These investigations have con-

verted the self-registering tide-gauge into a new and valuable seismometer. The connection between the Coast Survey of the United States and the researches of Mr. Mallett of Deville, and M. Perrey of Dijon, into the theory and facts of earthquake phenomena, is so little apparent at the first glance, that it might seem incredible. The approximate determination of the average depth of a portion of the great North Pacific Ocean, seconding and co-operating with the long-continued efforts of the most eminent hydrographers to solve the same and similar problems, is another instance of the intimate and helpful relations established between the labors of persons employed in distinct fields of physical science.

The connection of which we speak is presented in a still more interesting and important light, when we view the depths of the great oceans in their cosmical relation to the astronomical problem of the tides. In the tides, the oscillation of the second kind, as it is called, upon which depends the difference of two consecutive tides in one day, is much less than it should be, according to the theory of Newton; and La Place has shown that, if the depth of the sea were the same throughout, the difference between two consecutive tides would be reduced to that caused by local circumstances. From the want of harmony between theory and observation it is inferred that the variations from a mean depth in the sea are not great. "The mean depth of the Pacific Ocean is supposed to be about four or five miles; that of the Atlantic only three or four, which, however, is mere conjecture." "The density of the sea being but one fiftieth, nearly, of the mean density of the earth, that fluid must have little influence upon the variations of the degrees and of gravity, and upon the two lunar inequalities of which I have just spoken. Its influence is still further diminished by the *smallness of its mean depth.*" After proving that the surface of the terrestrial spheroid would be nearly in equilibrium if it became fluid, La Place adds:

"From this, and from the fact that the sea leaves bare vast continents, we conclude that it cannot be very deep, and that its mean depth is of the same order as the mean height of the continents and islands above its level, a height which does not exceed a thousand metres (0.62 mile.) This depth, then, is but a small fraction of the excess of the radius of the equator over that of the pole, an excess which exceeds twenty thousand metres. But in the same manner as lofty mountains cover some parts of the continents, so there may be great cavities in the basin of the sea. Yet it is natural to suppose that

their depth is less than the elevation of high mountains; because the deposits of rivers, and the exuviæ of marine animals, carried along by the currents, must in time fill these cavities."

La Place proceeds to speak of the importance of this result to natural history and geology, and remarks:

"The sinking of one part of the basin of the sea exposes another part of it, of an extent so much the greater as the sea is the less deep. Thus vast continents may have emerged from the ocean, without great changes in the *figure of the terrestrial spheroid.*"

This question of the probable mean depth of the sea, which we have seen to be so important in its bearings, is partially and to that extent satisfactorily answered; and the Coast Survey, in the performance of one of its most simple practical duties, has lent confirmation to the results of the great Frenchman's inquiry into "the invariability of the axis of rotation of the earth at the surface of the terrestrial spheroid, and the uniformity of this rotation, upon which all astronomy reposes."

The floor of the great seas supplies us with another occasion for exhibiting the mutual dependence of physical studies, and their applications to the wants of daily life. By the inspection of a nautical chart, it will be perceived that the two principal objects of the soundings marked upon it are to give the depth of water, and the distinctive character of the bottom, whether hard or soft, sand or mud or shells, or a mixture of two, together with the color of the materials. For a long time, no further use was made of these materials brought up by the lead from the long shelving banks of quartzose sand that front upon our Atlantic border. But having been placed under the microscope, they disclosed matters of interest to the geologist and naturalist.

The microscopic examination of the specimens of soundings was begun by the late Professor J. W. Bailey, of West Point, the result of whose labors was published in the Smithsonian Contributions to Knowledge, in the Coast Survey Reports, and in Silliman's Journal. Several new species of *Foraminiferæ*—a family which constitutes the greater part of the submarine fauna in the profounder depths—and of *Diatomaceæ*, were described by him, and their relative abundance at different depths pointed out. One of the most interesting results of his researches was the discovery of the fossilization of the *Foraminiferæ* in certain localities, and of the fact that

the substance called green-sand by geologists, which has given its name to an important formation in the cretaceous series, is composed of these fossilized mollusks, and that the process is going on now at the bottom of the ocean, in some places near our coast.

A large number of specimens were also examined by Mr. Pourtales. He first pointed out the fact that the number of specimens of *Foraminiferæ* found in the soundings increased very much with the depth, so that on our Atlantic and Gulf coast, at least, after reaching a depth beyond one hundred fathoms, the sounding-lead brings up *Foraminiferæ* almost entirely without admixture of other materials. The soundings taken on the line of the Atlantic telegraph have since confirmed this fact, and extended the range in depth of these minute organisms to nearly two thousand five hundred fathoms. By designating with colors on a map the positions in which the various species of *Foraminiferæ* were found more or less abundantly, their distribution according to depth is rendered very evident. Thus the hundred-fathoms line appears to form nearly the limit towards the shore for the *Globigerinæ*, which form the greater bulk of those abundant deposits mentioned above. Other characteristic species are seen to inhabit the shallower parts, some being confined to the region between ten and fifty fathoms, while some, beginning at twenty-five fathoms, extend to sixty or seventy. The region in which the formation of green-sand is going on appears to be a band, nearly on the hundred-fathoms line, off the coast of Georgia, Florida, and South Carolina. The *Foraminiferæ* are rather rare near the shore on our Atlantic coast, but are extremely abundant in the calcareous sands of the Florida Keys. In a zoölogical point of view, these investigations have been of much interest. About one hundred and sixty different species of *Foraminiferæ* have been found on our coasts, a great many of which are probably new to science.

We have already spoken of the exploration of the Gulf Stream; and we might enlarge upon the importance of an investigation which has led to the knowledge of the "distribution of temperature at different depths," of the "distribution of temperature at the same depth on different sections," of the "connection of the figure of the bottom of the sea with the distribution of temperature," and "of the lateral limits of the Stream."

The researches of the Coast Survey into the tides and co-tidal lines of both our Eastern and Western coasts demand separate treatment, on account of their value to navigation, and their theoretical deductions.

The geological examination of Florida Reef, by Agassiz, made under the auspices of the Survey, has resulted, we have the highest authority for saying, in one "of the most important contributions by which American geology has ever been enriched,"—that is, the discovery that the peninsula of Florida is of recent origin; that it has been formed by the growth of successive coral reefs, from north to south; and that this growth is still slowly proceeding.

Our knowledge of terrestrial magnetism—its periodical changes depending upon the hour of the day, the season of the year, and the regular interval of years—and of magnetic storms, with their diurnal, annual, and decennial periods, as established by Major General Sabine, has not failed to receive its share of elucidation from the labors of the Coast Survey.

But we dismiss these topics, that we may adduce one or two examples of the practical application by the Coast Survey of the most valuable results of experimental science. Here we would first speak of the electrotype, which has been developed into a high state of efficiency, and has conduced to the economy of time, labor and money. It is used principally to perpetuate the publication of the charts and maps of the Coast Survey. All electro-metallurgical methods are founded upon the observed fact, that if a body is immersed in the solution of a metal, and kept negatively excited, it receives a gradual accretion of the metal in solution. This principle admits of two forms of application, or leads to two distinct methods or processes of electrotyping—one called the *single-cell process*, in which the object that receives the deposit is made part of the electrical generator; the other, called the *battery process*, in which the electrical generator is distinct from the objects receiving the deposit and the vessels containing them. The latter is the method used in the Coast Survey.

We omit all description of the electrical generator, or battery, its preparation for use, and the mode of attaching the galvanometer, because they embrace details uninteresting, probably, to the

general reader. Assuming the battery to be in order, when an engraved plate is to be electrotyped, the two chief desiderata are to put the silver plates in the most complete negative condition, and to keep all the plates in perfect metallic connection with the main conductors. For the first of these purposes, it was the European practice to film over the silver plate with a spongy deposit of platinum; but the efficacy of this method is of short duration. It has been discovered in the Coast Survey office, that by occasionally immersing the silver plates in the perchloride of iron—which has the property of dissolving all the metal positive with regard to silver, and leaving the silver untouched—they are maintained in their primitive energy of action. Another peculiarity of the Coast Survey method is the manner of suspending the zinc and silver plates. The latter are suspended by lead to avoid the disturbance of the electrical relation of the plates consequent upon the use of a metal soluble in sulphuric acid, or of a metal subject, as iron is, to rapid dissolution from the electrical effect of the silver. But the zinc plates are suspended by iron, because, unlike the lead, (which is liable to disintegration by mercury,) iron refuses to unite with the mercury covering the zinc, is rendered negative by the zinc, and is thus protected from destruction. A third peculiarity of the Coast Survey method consists in the manner in which the deposited copper is prevented from cohering with the engraved plate, and forming an inseparable mass. After the plate has been cleansed by alkalies, acids, and mechanical appliances, till it is *chemically clean*, it is washed in a solution of cyanide of silver, from which it takes a pearly hue, then in water, and then in alcohol. While it is still wet with alcohol, a solution of iodine in diluted alcohol is poured over it, and about a minute afterward the iodine solution is washed off with alcohol. Enough of iodine is still left, however, to give the plate, when dry, a slightly iridescent appearance. This method of iodizing the matrix to prevent cohesion has removed all risk of injury to the engraving, though before its discovery some disastrous consequences resulted from the early trials. The application of heat to vaporize the iodine, the regulation of the current of electricity, so as to prevent the granular deposit of the copper, and the length of time for which the

engraved plate is allowed to remain in the vat, have been all decided by actual experiment.

The first electrotype copy produced is an *alto*, which, being subjected to the same processes as the engraved plate, furnishes a perfect fac-simile of the latter; and the copy only is used for printing the charts, the original engraved copper-plate being kept in the fire-proof building belonging to the Coast Survey.

The cost of the electrotype copy is about three times that of the blank copper on which the original engraving is made. It will afford a just idea of the value of these improvements and discoveries in the electro-metallurgic processes, to mention that it took *forty days at the beginning to finish a plate which can now* be made in two days. In several instances the electrotypes have been in the hands of the printer in less than twenty-four hours after the requisition for them was signed.

The same views of economy and expedition have led to some special experiments in photography, the aim of which is to employ this art in furnishing the reduced drawings that are placed in the hands of the engraver. The suggestion was a natural one. It was met at the outset with this difficulty, that the faithful natural copyist, without the power of selection, portrayed the distortions which the field sheets of the Survey rarely fail to suffer from exposure to the atmosphere; it was requisite, therefore, to discover some method of making selections, and correcting errors.

The recent improvements in photography have been chiefly in the optical arrangements. To have a clear conception of these, it must be understood that there are two kinds of cameras employed in photography. One of them is constructed solely with reference to rapidity in producing the picture; and this is the sort used in taking likenesses and pictures of moving objects, which are obtained in a fraction of a second. The other form is favorable to correct delineation, but proves to be very slow in its operation. Early in the introduction of the photographic art, the celebrated mathematician, Professor Petzval, of Austria, applied himself to the calculation of such forms for the optical part of the portrait camera as would produce the most rapid action and clearness of delineation combined. The making of these "portrait combinations" was intrusted to the optician, M. Voigtlander, and

the cameras have received his name. The Voigtlander lenses are admirable instruments for photographic portraiture; but the image they make is not a strictly true copy, only the central parts being minutely delineated. The want of sharpness in the image, except in the centre of the field, arises from the objects having a spherical form, while the picture is necessarily flat; and it is only when the plane is normal to the surface of the sphere that the best effect is produced. This defect has been remedied by Professor Petzval's orthoscopic (*line-viewing*) lens, between which and the portrait lens the difference is, that in the latter the aim is to concentrate the greatest amount of light upon the image, while in the former the end in view is the refraction of the incident rays at the same relative angles at which they fall upon the lens. By this means, in the orthoscopic pictures, several objects preserve their relative sizes and lateral distances. Hence the fitness of this method for producing reduced copies of drawings. The orthoscopic lens in use in the Coast Survey will make a picture fifteen inches in diameter, free from sensible error.

It is employed to furnish a reduced chart in the following manner: The primary charts, being supposed to be distorted by shrinking, must first be corrected. For this purpose, a sheet of transparent cloth, called *tracing vellum*, has the latitude and longitude lines of the chart correctly laid down on it, which divide the vellum and the chart into corresponding squares. The vellum is then laid on the chart, and such parts of the latter as are required in the reduced copy are traced over, square by square, the vellum being shifted so as to distribute the errors of each square, and thus to make the whole error inappreciable. In tracing the work the exact contour cannot be followed: many details must be omitted, especially those which lose their significance in the reduced size. The tracing on the vellum is presented to the camera reversed, in order that the collodion positive may not be reversed, as it appears in ordinary daguerreotypes and ambrotypes.

The ambrotype thus obtained from the tracing furnishes the elementary lines for the engraved chart. The ambrotype or collodion positive having been obtained, the tracing is presented obversely, or with its face outward, and another ambrotype is obtained as before; but this picture is reversed. It is carried through the chem-

ical process, which leaves the parts that were white in the tracing, black, and the parts corresponding to the black lines, transparent glass.

From this negative a print on paper is made, by preparing the paper with nitrate of silver, covering it with the negative, and exposing it to the sun. The light, passing through the transparent lines of the negative, blackens the nitrate of silver beneath. The portion of nitrate of silver not blackened being removed by chemical process, the print exhibits a fine reduced drawing of the tracing. The photographer puts in the filling between the portions of the contours given on the positive, and it is then ready for the engraver.

In the economy both of time and money, the photograph promises to confer advantages similar to those derived from the electrotype. A numerical comparison with the time and cost of reducing by hand cannot yet be fully made, because it would require that several charts should be reduced by both methods. In one instance, however, where the comparison was made, the time was as days to weeks; and the expense was in like proportion.

The President of the British Association, Richard Owen, in the last published *address*, gives an account of the "advances achieved in this most subtle application and combination of discoveries in photicity, electricity, chemistry, and magnetism;" yet he makes no mention of its being used in the way just described. As far as we know, this application of heliography is original with the Coast Survey.

A special appropriation has been made by Congress for the publication of the records and results of the Coast Survey; and the work of the year 1849 has been selected to form the contents of the first volume of Geodesy, as embracing details of every class, and therefore suited to give a full view of all the operations.

It will contain detailed accounts of the measurement of a principal base line, and of some preliminary bases; of observations of angles for primary, secondary, and tertiary triangulations; of observations of latitude with the zenith sector and with the zenith telescope; and of observations of azimuth and of time. The description of instruments, and of methods of observation and reduction, will form a necessary and valuable portion of the first vol-

ume. Another volume has been prepared, giving an account of the Coast Survey *Chronometric Expeditions for ascertaining the Longitude between Cambridge and Liverpool*, by Mr. George P. Bond, Director of the Cambridge Observatory. A volume containing the *Explorations of the Gulf Stream* has been prepared by the Superintendent, with the assistance of Professor A. G. Pendleton of the Navy. A volume containing the results for telegraphic longitude since 1852 is under the charge of Dr. B. A. Gould. There is also ready for publication a volume of *Sailing Directions* for the Coast of the United States, embodying all the hydrographic information brought out in the progress of the Coast Survey, in reference to harbors, dangers, ports of refuge, and sailing marks and lines; in which last are included light-houses and beacons, currents and tides, and the variation of the compass.

We early took a deep interest in the prosperity of the Coast Survey, and having prophesied its usefulness, and vindicated its character when assailed, we have allowed ourselves to enjoy its success. If we shall appear to have reviewed it with too much partiality, it will be remembered that we have furnished a warrant for our favor by citing the opinions of those "whose judgments, in such matters, cry in the top of ours."

We have reserved for the last and most decisive proof of the justice of our criticism, the emphatic tribute paid to the Survey by the Royal Geographical Society of London, in adjudging to Dr. Bache the Victoria Gold Medal for the year 1858, in consideration of "his successful labors in carrying out the great Coast Survey of the United States of America."

"It would be impossible," said the President in his address on the presentation, "to do justice to an extensive work of this sort, on an occasion like the present; but as the previous Reports of the celebrated Coast Survey, from 1844 to 1855 inclusive, are in our library, those of our associates, and of the public generally, who wish to form an estimate of their value, can do so at their leisure, and they will see how vastly our medallist has pushed on this great work. They will assuredly then rise from the examination with the thorough conviction that, whether we regard the science, skill, and zeal of the operators, the perfection of their instruments, the able manner in which the Superintendent has enlisted all modern improvements into his service, the care taken to have the observations properly registered, his modest and unpretending demeanor, or the noble liberality of the government, tempered with prudent economy, all unprejudiced persons must agree that the Trigonometrical Survey of the United States of America stands without a superior."

433

WHAT THE COAST SURVEY HAS DONE FOR THE WAR.

REPRINTED FROM THE

JUNE AND JULY NUMBERS

OF THE

UNITED STATES SERVICE MAGAZINE,

1865.

NEW YORK:
CHARLES B. RICHARDSON,
540 BROADWAY.
1865.

WHAT
THE COAST SURVEY
HAS DONE FOR THE WAR.

I.

When men are aware of the existence of a certain thing, if they do not perceive its results, they not infrequently assume that there are none.

There is probably nothing to which this observation is more applicable, than to the Coast Survey of the United States. Although it has been in operation for a number of years, and has been prosecuted with zeal, fidelity, and success, unsurpassed in the history of national enterprise, the knowledge of its merit has been confined to a limited number of persons beyond those employed in its labors. Yet, during that time, the country at large has been benefited, to an incalculable degree, by operations which embrace a range including the most scientific methods known to geodesy, as well as the infinite and infinitesimal details that bring the practical results of the survey within the comprehension of the least skilful navigator. Stated simply, without reference to scientific investigation, the Coast Survey has been the agency which has saved to the country millions of dollars and thousands of lives. But it was not appreciated, because its results are intangible. Men seldom realize the worth of that which benefits them indirectly.

The Rebellion came, and the Coast Survey, and, indeed, all other public interests, dwindled into insignificance before the vital one attached to the restoration of the integrity of the Republic. There were comparatively few who were aware that the Coast Survey could aid the Government in its efforts to suppress the Rebellion. Yet it has never rendered to the country more important service than that performed since the commencement of the war. Independently of the vast amount of information which it put into the possession of the Army and Navy, when the country was forced to the arbitrament of arms, it has never ceased to take an active part in connection with actual hostilities.

It is not within the scope of these papers to give a history of all the various means by which the Coast Survey has aided the military authorities. This would require far more space than the narrow limits within which they are necessarily confined. Were it possible to do otherwise, the account would prove a mass

of dry details, as uninteresting, in comparison with active movements, as the daily drill and camp routine of an army are to the hostile shock upon the day of battle. For these reasons, it is intended to descant only upon those services which are indissolubly linked with some grand operation of the war.

All of the military surveys executed, have been valuable to the commanders of our land and naval forces; but an account of all, forms no legitimate part of a narrative intended for the general reader. Had a battle or a bombardment happened along every league of the coast which the Rebels attempted to wrest from the United States, the labors of the Survey, in each place, would not have failed to become manifest.

We cannot overestimate the value of the operations undertaken with special reference to military and naval movements—reconnoissance, sounding, buoying, piloting—that have aided our armies and fleets. Some of these labors must, of course, forever remain in comparative obscurity, for their full value could have been brought to light only in the progress of military enterprise. But, whenever movements have taken place upon land or sea, the material aid derived from these labors has awakened the admiration of both Army and Navy, and they have rivalled each other in avowing their indebtedness, and in awarding unqualified praise.

The public, also, will appreciate these services, which, however humble they may appear, when contrasted with the vast operations to which they contributed, have proved largely conducive to the brilliant achievements of our arms. The most acceptable form which this account can take for them, will be a recital of the general services rendered by the Coast Survey in the field, but more particularly of those in which it enacted a conspicuous part in the battles of the war.

At the beginning of the year 1861, all the usual arrangements had been made for the continuation of the survey on the Southern sea-board of the Atlantic, and on the shores of the Gulf of Mexico. The angry cloud which was so soon to darken the land, had already commenced to gather, and to assume an alarming significance; but the wisest were not without hope that the danger portended, would pass harmlessly away. At all events, it was not proper that the premature action of any Department of the Government should lend countenance to the Rebellion, even by so much as tacitly acknowledging it to be a possibility. Accordingly, the parties of the Coast Survey resumed work in the various fields suitable for their operations.

Although it was ascertained that they were well received, events soon took such a course as to induce Professor A. D. Bache, the Superintendent of the Coast Survey, to dispatch a vessel for the purpose of conveying secret instructions to each

party, in order to insure the safety of the Government property, in the event of hostile demonstrations on the part of the South. To this precaution the Survey is indebted for the exemption of most of its property from capture by the enemy. The officers were upon the alert, and except the seizure of three small vessels, and a small amount of property stored in remote places, nothing was lost. Two of the vessels were seized as they lay in ordinary at Charleston, and the other was seized while engaged in stationing tidal observers along the shores of the Gulf. The loss entailed by their capture was inconsiderable; for two were schooners, of which one had been long in service, and the third was a steam-tender, so small that she was not considered fit to make the voyage from Charleston to New York. This vessel, when in possession of the Rebels at Savannah, was burned by accident. One of the schooners, the *Petrel*, was the first vessel which the Rebels sent out as a privateer. In the mist and gloaming, she mistook the frigate *St. Lawrence* for a merchantman, and fired a shot across her bows. In an instant, the ports of the frigate flew open, and a well-aimed broadside sent the schooner to the bottom.

The spring of 1861 saw almost all of the officers of the Coast Survey engaged on duty in the Northern States, either in continuing the regular surveys, or in aiding the Government wherever their services were available within the sphere of military operations. The new exigencies of the Government found them conversant with duties which they were needed to perform. The Engineers, and the Topographical Engineers,* two corps of the regular Army, had been created with reference to the scale upon which the old Army was based. They were now numerically insufficient for the performance of all the duties of reconnoissance, surveying, &c., devolving upon the immense forces in the field. Besides, they were needed more especially for the duties of military engineering, and some were withdrawn from these, by the attainment of high command. Thus, they were soon absorbed by the demands of a service, to which all that the Nation had previously experienced of war, was like playing soldiers. It was under these circumstances that the Coast Survey soon proved its usefulness.

In relation to the state of affairs on that work, in the spring of 1861, the Superintendent, in his Report for the year, said :—

"The call for the services of the officers of the Army and Navy being imperious, the operations, generally, have been executed by civilians. The advantages of the organization of the work, which have often been stated, were never so fully displayed as in this exigency. The regular work was carried on systematically, though upon a reduced scale. The Navy found on its roll officers who had knowledge of the harbors and coasts, from service on the Survey. To the Army list

* These two corps have since been merged into one, called the Corps of Engineers.

were returned officers skilled in reconnoissance, and in the other various operations of the Survey, and familiar with the coast and its shore-lines. The vessels of the Survey, both steam and sail vessels, were ready in the emergency for the revenue and naval services, and were freely yielded to their use.

"The material in the Coast Survey Office was rapidly put in the shape of hydrographic notes, and, by lithographic and photographic processes, the unpublished maps and charts, and memoirs of the coast, were placed at the disposal of the Departments of the Government, and of the officers engaged in consultations in regard to, or the execution of, operations along the coast."

In 1860, there had been twelve officers of the Army, and eleven officers of the Navy, serving on the Coast Survey. Of these, in 1861, eleven were detached from the work, and eight resigned. Two officers of the Army, and two of the Navy, remained temporarily. Of the civilians of the Survey, only seven were recreant to duty. All the rest proved their devotion to the Union.

One officer of the Survey accepted a colonelcy on the staff of Major-General Halleck, which position he still occupies, having accompanied General Halleck to the various military Departments in which he has been engaged since the beginning of the war. Another officer of the Survey, accepted the lieutenant-colonelcy of the 24th Ohio Regiment, and afterwards became colonel of the 44th Ohio Regiment. It was he, who, when commanding at Lexington, Ky., notified the disloyal convention there assembled, that it might consider itself dissolved. Another officer became Assistant Quartermaster in the Army. He was placed in charge of ocean transportation for the Army.

When the Rebellion broke out, one of the Assistants on the Coast Survey happened to be in Virginia with his family. Cut off from communication with the Office, he was not only without his usual means of support, but, at the same time, exposed out his usual means of support, but, at the same time, exposed to solicitations to join the insurgents. Although in such a strait, he repelled the offers which were made to him, and managed to sustain himself and his family by keeping store in Brentsville, Virginia, where he was found when our lines were extended to that town. He immediately submitted proof of his loyalty to the Government, and delivered the maps which he had secreted during the time that he was liable to be plundered of them. Since that time, he has been constantly engaged, with the rank of captain, in making surveys for the Corps of Engineers.

The only person on the Coast Survey who, upon the breaking out of hostilities, was so unfortunate as to fall into the hands of the insurgents, was a tidal observer, stationed at Calcasieu Entrance, Louisiana. About the beginning of April, 1861, he was questioned in regard to the nature of his occupation, and having satisfied his interrogators as to its harmlessness, he was allowed to continue his duties until the 11th of July, at which

time he was arrested, in consequence of an order dispatched from New Orleans. At first, it was intended to try him as a spy, at Lake Charles City; and he was confined there until the 15th of August, when a detachment of soldiers, sent from New Orleans, carried him to that city as a prisoner of war. He was finally brought before the military commander, General Twiggs, who silenced his explanations by personal abuse, remanded him to prison, and ordered his trial as a spy. He was first sent to the common "lock-up," and then, after an examination by a recorder, he was placed in the parish prison, subject to the order of the military commander. In that place of confinement he spent three months, and at last obtained his release through the interposition of the British Consul. He immediately left New Orleans, and reported in person at Washington, where he gave an account, from which these statements are taken.

In May, 1861, a hydrographic reconnoissance of the Potomac, between Blakistone Island and Georgetown, D. C., was executed by the Coast Survey. The results of the reconnoissance were immediately plotted, and furnished to the military and naval authorities.

In the first week of June, a topographical and hydrographical reconnoissance was made at White House Point, Mathias Point, and Lower Cedar Point. The results of the reconnoissance were immediately furnished to the Government.

By request of Lieutenant-General Scott, arrangements were at the same time perfected, to make a detailed survey of the ground occupied by Brigadier-General (now Major-General) McDowell's army, and of the country to the north and west of his pickets, in the direction of Fairfax Court-House, including the Upper Potomac, as far as the point known as the Chain Bridge.* As the survey progressed, tracings of it were furnished to Generals McDowell and Tyler, and to Colonel (now General) Heintzelman. The two Corps of Engineers were also supplied with copies. Subsequently, the survey was photographed, and placed at the disposal of the officers for whose purposes it had been ordered.

In the middle of August, at the request of Major-General McClellan, the northwestern approaches of the City of Washington were surveyed. In October, the surveys were extended towards the northward and westward, from Fall's Church and the Chain Bridge.

Early in November, the topography of the Potomac was executed from below Alexandria to Mount Vernon, and from the southern shore of the Potomac, to within three miles of Fairfax Court-House.

---

* That bridge has long since been superseded by another kind of structure.

These surveys, in the aggregate, embraced two hundred and twenty-three square miles.

After the month of August, the parties engaged in these operations were under the general direction of Lieutenant-Colonel Macomb, Topographical Engineer-in-Chief of the Army of the Potomac.

In the Report of Major-General McClellan, where he refers to the Peninsular Campaign, after enumerating certain officers of the Topographical Engineers, he says:—

"This number, being the greatest available, was so small, that much of the duty of the department devolved upon parties furnished by Professor Bache, Superintendent of the Coast Survey, and other gentlemen from civil life."

Towards the last of August, two ships, the *Express* and *Orizimba*, were seized in Maine, by a Coast Survey party on board of the *Arago*. This vessel was engaged in hydrography on the coast of Maine, and the seizure alluded to was executed under the authority of the Collector of Customs at Eastport, Maine. In September, the *Arago*, which, by request of the same collector, was cruising in the Bay of Fundy, captured the ship *Alice Ball*, of New Orleans.

While reconnoissances and surveys were in progress within the theatre of active military operations, other reconnoissances and surveys, for military purposes, were executed in places more remote. The Delaware, opposite Philadelphia, was surveyed, and also near Fort Mifflin and Fort Delaware. Military surveys were executed in Accomac and Northampton Counties, Virginia. In fact, wherever a prospective need of defence called for information which the Coast Survey could provide, or wherever a military movement demanded the aid which it alone had the power to give, there the Coast Survey was found.

To facilitate the operations of blockading squadrons, hydrographic notes were prepared for the use of the War and Navy Departments, and furnished to them, and to the commanders of expeditions. The first copies were referred to an advisory Commission composed of Brigadier-General (now Major-General) Barnard, Captain (now Rear-Admiral) Du Pont, Commander (now Rear-Admiral) Davis, and the Superintendent of the Coast Survey. In the Report of the Secretary of the Navy for 1861, he referred to the importance of this Commission. The estimation in which the material, submitted by the Coast Survey, was held by the naval officers who composed the Commission, is shown by the following letter:—

WASHINGTON, *October* 2, 1861.

"SIR:—On closing, for the present, the labors of the mixed conference, in which I have presided, I cannot but express the high opinion I have been led to entertain of the usefulness of the Coast Survey, to our knowledge of the sea-coasts,

sounds, and bays of the Atlantic and Gulf borders of the United States, without which the deliberations of the conference could not have been successfully conducted.

"Very truly, your friend and obedient servant,

S. F. DU PONT,
Flag-Officer, President.
"C. H. DAVIS,
Commander, Secretary."

A. D. BACHE, LL. D.,
"*Superintendent United Coast Survey,*
"*Washington, D. C.*

The name of Admiral Du Pont naturally brings us to the consideration of the most important service which the Coast Survey rendered to the Government in the course of the year 1861.

The reader will recollect that, for a long period after the battle of Bull Run, the war seemed to languish. The forces opposing each other near the Potomac presented the strange spectacle of two hostile armies, both of which were upon the defensive, and neither of which seemed inclined to take the initiative.

Although Western Virginia continued to witness the uninterrupted triumph of our arms, and the expedition to Hatteras Inlet, North Carolina, and the lodgment on Ship Island, Mississippi Sound, had been successful, yet the general result of operations, since the commencement of the war, had been manifestly in favor of the South. Since the battle of Bull Run, no decisive conflict had taken place, but the Rebel armies, from east to west, had closed around the line which had become a frontier; while the Government of the United States, trammelled by the necessity of consulting political expediency as well as military exigency, seemed almost paralyzed in confronting a force precipitated with the volcanic energy characteristic of rebellion.

The country was despondent. The cause of this feeling originated less in the belief that the South had accomplished much, than in the experience that the United States had given little evidence of that great military power, which, despite the most stubborn resistance, was eventually to overwhelm the Rebellion. True, this dark hour was not like that when the Army of the Potomac, baffled in its purpose, returned from Richmond, joined the shattered ranks of General Pope, and barely saved the Capital. But it was dark enough, for then the Nation was doubtful of its untried strength; whereas, when it welcomed back its army from the Peninsula, its sadness was redeemed by the thought that it possessed a force of veterans so tried, that, even in retreat, they had often snatched victory from the enemy.

At this period, however, the people sorely needed some military success to cheer their drooping spirits, and inspire them with confidence in the administration of affairs. The victory at Port Royal had that effect.

A mysterious fleet, a mixed military and naval expedition, assembled in Hampton Roads. On the 29th of October, it sailed towards the South. The naval part of the expedition was commanded by Commodore Du Pont; the land-forces were commanded by Brigadier-General T. W. Sherman. Scarcely had the fleet put to sea, when it encountered a violent gale, which scattered the vessels in every direction. The public mind was much excited lest the storm should prove fatal to the success of the expedition, for it was known that the fleet comprised many craft that were entirely unfit to meet heavy weather.

The crew of the transport *Peerless* were removed when she was in a sinking condition. The marines on board of the steamer *Governor* were with difficulty rescued. But the fleet, although shattered, was not wrecked. As soon as the vessels assembled, operations commenced.

In his Report to the Superintendent of the Coast Survey, Assistant Boutelle, speaking of the preliminaries of the attack, says:—

"The *R. B. Forbes* came to me to say that the *Augusta* and *Dale*, steam sloop and gunboat, were outside. I reported the fact to the commodore, and he expressed so earnest a wish to get them in before the attack, that I determined to bring them in at once, though night had already come on. * * * * * The *Augusta* took the *Dale* in tow, and we passed in without trouble, having no cast less than nineteen feet, and I had the satisfaction of reporting to the flag-officer their arrival at half-past eleven P. M. Running outside again, I anchored the *Vixen* at the entrance, in readiness to bring in the *Ericsson* and the *Baltic*, drawing twenty and twenty-two feet. * * *

"At sunrise we anchored a large spar-buoy at the entrance of the south channel. Mr. Platt and Mr. Jones, first and second officers of this vessel, were then sent on board of the *Baltic* and *Ericsson*, respectively, and I led in with the *Vixen* at half flood." * * *

"After anchoring the *Baltic* and *Ericsson*, I went on board of the *Atlantic*, with General Sherman, and witnessed the fight." * * *

The attack was made on the morning of the 6th of November. The vessels steamed slowly around, describing in their course the figure of an ellipse, and delivering their broadsides as they passed within short range of Forts Beauregard and Walker, which are on opposite sides of the harbor. The fire of the vessels was so rapid and well-directed, that, as they approached to make their third revolution, the flag of Fort Beauregard was hauled down, and the enemy hastily abandoned both works.

In the Report of Commodore Du Pont to the Navy Department, he remarks:—

"The Department is aware that all the aids to navigation have been removed, and the bar lies ten miles seaward, with no features on the shore-line sufficient to make any bearings reliable. But, by the skill of Commodore Davis, the Fleet-Captain, and Mr. Boutelle, the able Assistant of the Coast Survey, in charge of the sounds, and bays of the Atlantic and Gulf borders of the United States, without

steamer *Vixen*, the channel was immediately sounded out and buoyed. On the evening of Monday, Captain Davis and Mr. Boutelle reported water enough for the *Wabash* to venture in." * * *

In the Report of General Sherman to the War Department, he says:—

"It is my duty to report the valuable services of Mr. Boutelle, Assistant in the Coast Survey, in assisting me with his accurate and extensive knowledge of this country." * * *

On the Pacific coast, upon the breaking out of hostilities, the Coast Survey steamer *Active* took measures in concert with the military and naval authorities. The vessel was once anchored off Mare Island Navy Yard, for the purpose of protecting the Government property there, which, there was reason to believe, was endangered. This vessel performed other service, in transporting troops and supplies. The Pacific coast was only temporarily involved in the general disorder which pervaded the country, and there will be no further occasion to notice events in that section.

In the course of the year 1862, of forty-nine officers of various grades on the Coast Survey, thirty-two, in addition to their usual duties, rendered service in military operations. One narrowly escaped being killed before Yorktown. The instrument with which he was working was shivered into atoms by a shell thrown by the enemy, and a soldier on picket near by was killed outright. The same shell mortally wounded Lieutenant Wagner, of the Topographical Engineers, and a soldier named Luther, of the 2d Rhode Island Regiment, who was attached to the surveying party. Two Assistants on the Coast Survey, while surveying on James Island, South Carolina, were surprised by a party of the enemy, but instead of being captured, took the Rebels prisoners. Another Assistant was dangerously wounded, while on a reconnoisance up Pearl River, the stream which, for some distance, forms the boundary between Mississippi and Louisiana.

During the year, Major Palmer, who for a long time had been Assistant in charge of the Coast Survey Office, died in consequence of disease contracted from exposure during the Peninsular campaign. He was succeeded in the office by J. E. Hilgard, Esq., Assistant on the Coast Survey.

The reconnoissances and surveys for military purposes, executed during the year 1862, were so numerous, that it will not be possible to give more than a synopsis of them. This will be best afforded by the following transcript of portions of Appendix No. 1 of the Superintendent's Report for 1862: —

"Reconnoissance for defensive purposes, and mapping of the environs and southern approaches of the City of Portland, Maine."

"Special hydrographic examination made in the vicinity of Pea-Patch Island, Delaware River, and development of changes by comparison with previous surveys."

"Triangulation and plane-table survey of the banks of the Potomac, completed, from Blakistone Island to Washington."

"Detailed survey of the environs of Williamsport, Maryland, for military purposes. Topography, for military use, of the ground north and west of Bladensburg, Maryland, along the line of the District of Columbia."

"Plane-table survey commenced of the site and approaches of Fort Lincoln, and other defensive works, near Washington City."

"Extension of the Topographical survey, in Fairfax County, Virginia, from Fall's Church towards Fort Marcy and Lewinsville."

"Topography of Manassas Junction, Virginia, and its vicinity, including, with other surface details, the intrenchments erected in 1861."

"Plane-table survey on the north side of the Rappahannock River, opposite Fredericksburg, including Falmouth and its environs, and the roads leading to Belle Plain and the upper part of Potomac Creek."

"Special topographical service in the Army of the Potomac, on the peninsula between York and James Rivers, including local surveys and general reconnoissance."

"Topographical survey of Drummondtown and its vicinity, for military purposes."

"Special plane-table surveys of redoubts, forts, and intrenched camps, on the banks of Elizabeth River, Virginia, and in the neighborhood of Norfolk."

"Hydrography of the Potomac River, extending upwards from Blakistone Island to the vicinity of Indian Head."

"Hydrographic survey of the Potomac from Alexandria to Georgetown, including the Eastern Branch to the vicinity of the Navy Yard."

"Special service with North Atlantic Blockading Squadron before Yorktown, Virginia; in York River and its branches; extended reconnoissance up the Mattapony River, and guard duty at West Point."

"Hydrographic survey of Metomkin Inlet, Virginia, including also Metomkin Bay, and development of changes in the shore-line of the entrance, for military purposes. Buoys set to mark the channel into the inlet."

"Complete hydrographic resurvey of Hatteras Inlet, including its approaches from seaward and the channels leading into Pamlico Sound. Observations on the tides and currents of Hatteras Inlet, North Carolina, with reference to their effect in changing the shore-lines outside and inside of Pamlico Sound."*

"Special service at Hatteras Inlet, with North Atlantic Blockading Squadron. Hydrography of Oregon Inlet, and hydrographic reconnoissance in Neuse River, N. C. Stakes set to mark the channels, and buoys placed on the Middle Ground."

"Shore-line survey to determine changes, and hydrographic resurvey of the entrance, approaches, and harbor of Beaufort, N. C."

"Special and general service on the coast of South Carolina and Georgia, with the South Atlantic Blockading Squadron."

"Shore-line survey, for military purposes, of Stono, Folly, and Kiawah Rivers, and of John's, James, Cole's, Kiawah, and Folly Islands, including the intrenchments found on their banks."

"Shore-line survey, for military purposes, of Beaufort River, S. C., and of the upper part of Broad River, &c."

"Hydrography of Stono, Folly, and Kiawah Rivers, and supplementary soundings in Broad and Beaufort Rivers, S. C., &c."

"Plane-table surveys, for military purposes, of the ground commanded by the defensive works erected at St. Louis, Mo., in 1861."

The preceding list gives the merest outline of the amount of service which the Coast Survey rendered to the military

---

* This survey was made on account of the encroachment of the sea upon Fort Hatteras.

authorities during the year 1862. The occasion, during that year, upon which it most signalized itself by its connection with military operations, was at the forcing of the passage of the Mississippi, an exploit which resulted in the rendition of the City of New Orleans.

In April, 1862, Captain (now Vice-Admiral) Farragut attacked Forts St. Philip and Jackson, situated near the mouth of the Mississippi. Captain (now Rear-Admiral) D. D. Porter commanded the bomb-flotilla, and to that was attached the *Sachem*, in charge of Assistant Gerdes, of the Coast Survey.

During the season immediately preceding the Rebellion, the regular triangulation of the Survey had established the positions of certain points near the mouth of the Mississippi. It was, therefore, easy to determine other points, from those whose positions had been calculated. The use to which this process could be applied was soon exemplified in the bombardment.

By the morning of the 18th of April, when the mortar-vessels, twenty-one in number, took position, the exact distance from each one of them to Fort Jackson had been correctly determined. Some of the vessels lay along the shore of the river, where it is covered with a sparse growth of timber. These were concealed as much as possible from the observation of the enemy, by dressing the masts with foliage, so as to render them undistinguishable from the trees which they overtopped.

The bombardment of Fort Jackson opened immediately after each vessel had been placed in its allotted position; and during the following three days, whenever a vessel was obliged to change its place, the distance from its new position to the fort was re-determined by Coast Survey officers who remained with the flotilla.

Some of the party were in the mean time engaged in making maps of the Mississippi, in the vicinity of the defences. An examination was made of the channels which commence near Fort Jackson, and connect the Mississippi with the Gulf of Mexico. The *Sachem* was also employed in transporting the wounded of Commodore Farragut's fleet to the hospital at Pilot Town.

On the 24th of April, Assistant Gerdes accompanied Major-General Butler, and piloted his boats, in an attempt to turn the forts from the direction of the waters to the northward of Fort St. Philip.

In relation to these operations, Commodore Porter, writing to the Superintendent of the Coast Survey, under date of April 29th, says:—

"Amid the exciting scenes here, and the many duties that are imposed on me, I must steal a few moments to tell you something of the share the Coast Survey has

had in our doings, and to thank you for the valuable assistance rendered me by the party you sent here. * * * The results of our mortar-practice here have exceeded any thing I ever dreamed of; and for my success, I am mainly indebted to the accuracy of positions marked down, under Mr. Gerdes' directions, by Mr. Harris and Mr. Oltmanns. They made a minute and complete survey from the 'jump' to the forts, most of the time exposed to fire from shot and shell, and from sharpshooters from the bushes. * * * The position that every vessel was to occupy was marked by a white flag, and we knew to a yard the exact distance of the hole in the mortar from the forts, and you will hear in the end how straight the shells went to their mark. Mr. Oltmanns and Mr. Harris remained constantly on board to put the vessels in position again when they had to haul off for repairs, or on account of the severity of the enemy's fire. * * * I cannot speak too highly of these gentlemen. I assure you that I shall never undertake a bombardment, unless I have them at my side. Mr. Gerdes has been indefatigable in superintending the work, laboring late at night in making charts and providing the officers in command of ships with them, marking the positions of obstructions in the channel, and making all familiar with the main way."

On May 16th, Commodore Porter again wrote to the Superintendent of the Coast Survey, as follows:—

"I forward to you, by the *Baltic*, a plan of Fort Jackson (or the remains of it), faithfully drawn, under the direction of Mr. Gerdes, by Messrs. Harris and Oltmanns, Assistants of the Coast Survey. It is a striking specimen of the effects of mortar-practice, showing what can be done when distances are accurately determined, as they were in this case by the gentlemen belonging to the Coast Survey."

During the years which preceded the war, the demand for charts did not average ten thousand annually. In the year 1861, however, the Coast Survey issued twenty-one thousand copies of charts, and in the following year forty-four thousand.

Of course, the general issue of all maps by which the enemy could profit, if they fell into their possession, was suspended from the commencement of hostilities. Issues of such maps were made only to those who were clothed with the proper authority.

Totally distinct from the charts, is another class of maps, universally called war maps. These have been in great request. The Superintendent, in his Report for 1862, says: "Color printing has been introduced for maps of the seat of war, and has proved very acceptable, the sale of the maps more than reimbursing the cost of their production."

Let us for a moment revert to the postulate with which this paper commences. To establish its truth, at least with reference to special application to the subject under consideration, it is only necessary for the reader to be informed, in addition to what has already been learned, that as late as February, 1863, after all the important services which have been detailed, some newspapers in the United States urged that the Coast Survey should be discontinued during the war. This view was rendered still more singular, by the fact that one of the principal reasons assigned for its discontinuance was the prospective release of a comparatively small number

of persons who could thenceforward take an active part in the prosecution of the war. They might, perhaps, have formed a company of soldiers. Fortunately, most of the influential newspapers, as well as most of the influential men of the country, took a very different view of the manner in which the Coast Survey could be instrumental in aiding the Government, but none knew what these few pages have imperfectly set forth.

II.

THE preceding paper consisted of a general history of the operations by which the Coast Survey had contributed to the prosecution of the war, from its commencement until the end of the year 1862. The present one will resume the history with the beginning of the year 1863, and conclude it with the cessation of that agency, which continued to be actively and beneficially exerted, until the occasion for its exercise closed with the Rebellion.

In accordance with the view previously expressed and still entertained, regarding the character of an account intended for the general reader,—that it should not enter into details uninteresting and often unintelligible to the popular mind,—it may be well here to reiterate, that the present endeavor to provide information, professes to do no more than afford a cursory view of operations whose number alone would preclude detailed description within the limits assigned for their treatment, and to dilate on them only when connected with well-known events.

The last grand operation described, was the capture of New Orleans. Throughout the remainder of 1862, endured a long season of hope deferred, through misfortune, which, if not always defeat, was often questionable success. This was the period that witnessed the return of the Army of the Potomac from the Peninsula, the enemy's advance on Washington, and the battle of Fredericksburg.*

The only great success which served to counterbalance many grievous disasters, was the victory of Murfreesboro'. The battle commenced on the 31st of December, 1862, and ended by night, without decisive results. It was reserved for the 3d of January to witness the flight of the Rebel army. Yet during

* The victories of South Mountain and Antietam occurred within that period, but as they were fought to repel invasion, they were not calculated to inspire the people with hope of the eventual defeat of the South.

this very conflict, which ended in a brilliant triumph, General Sherman was obliged to raise the siege of Vicksburg.

The aspect of affairs, during the latter part of 1862, was far from encouraging. Chancellorsville and Chickamauga were shrouded in the future. But the Nation at last emerged into the light of a better day—a glorious day, when Victory alighted on the standard of the Union, and rested there. Ignorance, indifference, and jealousy had enjoyed their reign. The hour and the men drew nigh.

The point of time at which it is proposed to introduce matters appertaining to the Coast Survey is now accurately designated. It will be necessary to revert to the close of 1862, chiefly to give the dates at which some officers of the Survey commenced operations which continued in 1863, and correspondingly there will be a slight recurrence to the events of that year.

At the commencement of 1863, all of the army officers connected with the Coast Survey had been detached; and of the navy officers only one remained.

On the coasts of the Atlantic and Gulf of Mexico, of nine assistants, fourteen sub-assistants, and twenty-two aids, twelve assistants, seven sub-assistants, and ten aids served with the military and naval forces during the campaigns of the third year of the Rebellion.

In December, 1862, three officers of the Coast Survey reported to Major-General Banks, who, at the time, was preparing for the expedition to the upper country of Louisiana.

They made a survey on the right bank of the Mississippi, opposite to New Orleans. In February, 1863, they made several reconnoissances, and, in conjunction with Lieutenant Loring, of Brigadier-General Emory's staff, they examined the bayous which connect the Atchafalaya, Red River, and Mississippi. Maps and tracings had been sent to the military authorities before the night of the 25th, when the gunboat *Kinsman*, which had been employed in the surveys, snagged and sank in deep water.

During March, two of these officers reported at Baton Rouge, where they engaged in reconnoissances, surveying, and construction of fortifications.

At the close of March, one of the officers was assigned to duty with the staff of Brigadier-General (now Major-General) Weitzel, and served as engineer and topographer. When the greater part of the army had passed Berwick's Bay, he accompanied Lieutenant Harwood, on the gunboat *Clifton*, in order to attend the troops under the command of Brigadier-General Grover, who deemed his intimate knowledge of the country lying back of Bayou Têche to be of especial value to the expe-

dition. After the engagement at Irish Bend, resulting in the capture of the enemy's works, it was decided to make a naval attack upon Fort Butte à la Rose, and thus open the Atchafalaya. Being well acquainted with the location of the fort, the same officer was attached to the squadron. The *Clifton* having been disabled in the attack, he went on board of the *Estrella*, at the request of her commander, Captain A. P. Cooke. A few days afterwards, the *Estrella* passed through the Atchafalaya, and opened communication with Admiral Farragut.

While engaged in reconnoissance at the siege of Port Hudson, where he remained until the surrender, he joined the expedition to Sabine Pass, and upon his return, reported to Major-General Franklin, and served through the campaign in Western Louisiana.

The knowledge possessed by Admiral Porter in regard to the usefulness of officers of the Coast Survey, when acting in concert with naval movements,—an experience which he had acquired at the bombardment of Forts Jackson and St. Philip,—no doubt disposed him to accept with pleasure the services of two, who were sent to the fleet operating in the Mississippi.

On the 27th of November, 1862, they reported at Cairo, Illinois. One was sent on board of the flag-ship *Black Hawk*, and compiled maps of the Yazoo region.

On the 9th of December, the other officer was dispatched from Cairo, on board of the gunboat *Tyler*, to sketch the shores of the Yazoo. On the 23d, the gunboat steamed up that river. Five miles from the mouth, she encountered a heavy fire of musketry from both shores; but she held on her course during the day, and at night anchored in the stream. The next day, the survey of the banks of the river was resumed, and mainly completed for the purpose contemplated by General Sherman and Admiral Porter. The map was immediately duplicated, and afforded the preliminary information necessary for the debarkation effected by the army of General Sherman, on the 26th of December.

As already incidentally mentioned, the siege had to be abandoned.

More than thirty copies of the sketches delineating the approaches to Vicksburg were furnished in answer to the requisition of the military and naval commanders. After the 20th of January, 1863, the topography of the approaches was steadily pushed forward, and even included a point within six hundred yards of the enemy's batteries, and three miles beyond the pickets of our forces.

Early in January, 1863, the Superintendent of the Coast Survey received from Admiral Porter a communication containing the following expressions:—

"Mr. Strausz and Mr. Fendall have rendered themselves extremely useful to me in compiling maps for the use of the Army and Navy, and making surveys of the field of operations before Vicksburg. I sent Mr. Strausz down in a vessel, near the front of the city, to make plans and take sketches of the batteries, which he did to my satisfaction, giving us information that we have not possessed before, and showing the impracticability of attacking Vicksburg by water alone. We might otherwise have run our heads against a stone wall. During the ascent of the Yazoo River, and while engaged in taking up torpedoes, our passage was contested at every step by two or three thousand riflemen, in pits and behind levées: so protected that our guns could not hurt them. The vessels were much cut up, the rifle-balls going through and through the light upper works. Mr. Strausz accompanied the expedition, and while under the fire, produced a good chart of the river and back country, with which we have made our advances. I could not have got along very well without these maps."

The important capture of Arkansas Post, otherwise known as Fort Hindman, took place on January 11th, 1863, in the interval between the two sieges of Vicksburg. Previously, both of the officers mentioned by Admiral Porter had been engaged on a map of Arkansas River, for the express purpose of facilitating the attack on Arkansas Post. After the capture of the position, they executed a detailed survey of the fort and vicinity.

After the raising of the siege of Vicksburg, and the relinquishment of the attempt to turn the fortifications on Haines's Bluff, by passing gunboats through Steele's Bayou and Deer Creek, during which attempt, the officers of the Coast Survey executed a map of the route pursued by the expedition, the plan of running the batteries at Vicksburg was adopted by Major-General (now Lieutenant-General) Grant, and successfully executed, as the whole world knows.

This exploit was accomplished on the night of April 16th, 1863. Then came the memorable series of victories, when General Grant, delivering battle after battle, drove one army of the enemy across Black River, and the other into the lines of Vicksburg, which, with communications severed and works invested, was at last forced to surrender its garrison as prisoners of war.

Let us now glance at operations which, progressing during the same interval of time, were so distant in space, that to examine them, we shall be obliged to mentally skip nearly half way across the continent.

On the 30th of January, 1863, the Coast Survey steamer *Bibb* anchored off Charleston Bar. On two successive nights the boats of the steamer were lowered, and parties proceeded with secrecy and dispatch to make a careful examination of the channels. It will be recollected that early in the war, a number of hulks, commonly known as the Stone Fleet, were sunk across the main ship-channel. Renewed soundings were therefore necessary before an attack, for the purpose of ascertaining what modifications had occurred in the depth as given on the Coast Survey chart of Charleston Harbor.

The information acquired by the examination was used in the passage of the iron-clads to the attack on Fort Sumter, on the 7th of April, 1863. On the 5th of April soundings were again taken. The result confirmed the previous selection of "Pumpkin Hill Channel" as best for the passage of the Bar.

In Admiral Du Pont's official order, giving dispositions for the attack, he says:—

"The Bar will be buoyed by the *Keokuk*, Commander Rhind, assisted by C. O. Boutelle, Assistant United States Coast Survey, commanding the *Bibb*; by Acting-Ensign Platt, and the pilots of the squadron."

Admiral Du Pont wrote to the commander of the *Bibb*, in relation to the first examination of the Bar:—

"Your examination of the channels and water on the Charleston Bar seems to have been conducted with great skill and boldness, and I beg you to receive my thanks and commendation for the same, and for the important information obtained."

In the Report of the Superintendent of the Coast Survey, 1863, he says:—

"Mr. Robert Platt, the executive officer of the *Bibb*, was permitted to pilot the *Weehawken*, * * * * and was temporarily disabled by the breaking of a bolt under the concussion of a heavy shot from one of the Rebel batteries."

The attack on the 7th of April failed. Success would have been astonishing. No mere naval attack could have reduced Fort Sumter. The work was intact; and a few guns afloat were pitted against the converging fire of hundreds ashore.

At the commencement of 1863, several officers of the Coast Survey were ordered to report to Major-General Foster, commanding the Department of North Carolina. They assisted in the operations with which the public is familiarized in connection with the names Newbern and Little Washington.

On June the 1st, General Foster wrote to the Superintendent of the Coast Survey:—

"Mr. Fairfield has just given me a copy of his triangulation on the Neuse River, which puts me in mind to thank you for the assistance which you have rendered in sending him, Mr. West, and Mr. Rockwell, here. Their labors have aided very much in obtaining a correct knowledge of the country for military purposes."

Towards the last of May, rumors of an intended invasion of the North prevailed. Many days had not elapsed, when anticipation was realized, for the movement began. General Lee suddenly quitted his winter-quarters, and marched, no one, at first, knew whither. The Army of the Potomac marched to interpose between the enemy and any threatened quarter, but the movement of the enemy was well masked, and, for a while, there was fearful suspense in the North.

This was augmented, when, on the 28th of June, the Army of the Potomac, then on a forced march to intercept the enemy, was subjected to a change of commanders. On that day, Major-

General Meade assumed chief command. On the 1st of July, at Gettysburg, the enemy's advance was encountered by Major-General Reynolds, and on the next day, General Lee found himself in the presence of the Army of the Potomac.

On the 16th of June, the Superintendent of the Coast Survey, in anticipation of danger to Philadelphia from the movement then in progress, offered his services to the Mayor of Philadelphia. As soon as Major-General Dana assumed command in the city, he telegraphed to the Superintendent: "We have no engineer, and your aid would be invaluable, if you are still able to renew your kind offer, and could come at once, with such of your corps as you can bring."

On the 27th of June, the Superintendent arrived. From every direction officers of the Coast Survey trooped to the city. Officers of various City Departments, graduates of scientific institutions, employés of companies, and many others, eagerly proffered their services, and were at once distributed through the district surrounding the city.

The general result of the operations which ensued under the direction of the Superintendent of the Coast Survey, as Chief Engineer, is comprised in a reconnoissance covering an area of eighty square miles, the construction of a number of small field-works, and the selection of sites for others, to be constructed in case of emergency.*

It was never contemplated that these defences should resist a combined attack from General Lee's army, as supposed by two or three anonymous writers, who asserted that the sites were badly selected, and the works wrongly constructed.

The works were constructed in apprehension of a *coup de main* executed by cavalry. They, for the most part, stood in lieu of *têtes de pont*, and commanded not only the bridges, but the points from which an enemy could have shelled the city. As for the faultiness of sites and works, probability is strongly adverse to the supposition, for the Chief Engineer is a graduate of West Point, and his labors were subjected to daily inspection by General Dana.

On the 19th of September, 1863, the battle of Chickamauga commenced. The issue was not then decisive; but on the next day, the rout of the right wing of the Union forces would have been fatal to the whole army, had not the tenacity of the left wing, commanded by Major-General Thomas, deterred the ene-

* In the Coast Survey Report for 1863, are included full details in relation to the reconnoissance and construction of defences at Philadelphia, with due mention of the services of all engaged. The Report is on the eve of publication, some of the advance sheets having been sent to me by J. E. Hilgard, Esq., Assistant in charge of the Coast Survey Office, to whom I am indebted for much data available in the preparation of these papers at the request of the Editor of the UNITED STATES SERVICE MAGAZINE.

my from pursuit of the disorganized masses of troops that retreated in disorder towards Chattanooga. Under cover of night, General Thomas fell back to Rossville, and, on the evening of the 21st, withdrew his troops into the defences of Chattanooga.

The enemy immediately occupied Lookout Mountain and Missionary Ridge, and stretched his line across Chattanooga Valley. General Rosecrans's communication by the left bank of the Tennessee with Bridgeport being thus cut, and his other lines of supply jeopardized by a cavalry raid, his army was completely isolated, and, for a time, in a precarious situation. Matters had arrived at a desperate pass, when General Grant, arriving at Louisville, telegraphed to General Thomas, who superseded General Rosecrans, to hold out to the last extremity.

The preliminary operation undertaken was the opening of the railroad communication on the left bank of the Tennessee to Bridgeport. This was secured by a concerted movement, consisting of a strong lodgment effected on the left bank of the Tennessee, at Brown's Ferry, and by marching from Bridgeport the re-enforcements from the Army of the Potomac, composed of the 11th and 12th Corps, under command of Major-General Hooker.

Brigadier-General (now Major-General) W. F. Smith, Chief Engineer of the Army of the Cumberland, originated and executed the former movement. On his staff was an officer of the Coast Survey, who rendered important service in the reconnoissance. In another reconnoissance, he examined the ground between the North Chickamauga and Brown's Ferry, with the view of ascertaining routes that would mask movements of troops, and preparations for laying pontoons.

Previously to the enemy's occupation of Lookout Mountain and Missionary Ridge, two officers of the Coast Survey had almost completed a map of the ground. From the survey of Lookout Mountain knowledge was acquired of the practicability of the attack that carried it.

As the result of the battles which took place on the 24th and 25th of November, the Rebel army was partially routed, and forced to retreat to Ringgold, and eventually to Dalton.*

In December, an officer of the Coast Survey was sent to Chattanooga, by request of Brigadier-General W. L. Elliott, Chief of Cavalry of the Army of the Cumberland. He made a survey comprising fifty square miles of the country south of Chattanooga, inclusive of the battle-field of Chickamauga. He also drew a map, showing the line of defences around Chattanooga,

* The combat of the 23d, although it resulted in securing the position, Indian Hill (Orchard Knoll), was really a reconnoissance in force.

and indicated range-marks for the purposes of the Chief of Artillery.

At the request of Major-General Foster, two officers of the Coast Survey joined his command in East Tennessee. Under the direction of Captain O. M. Poe, Corps of Engineers, and Chief Engineer of the Department of the Ohio, they made a survey of all the approaches to Knoxville.

When the Head-Quarters of the Military Division of the Army of the Mississippi were removed to Nashville, two officers of the Coast Survey executed a map of the vicinity. One of them also examined the numerous branches which empty into Cumberland River, from the south, between Nashville and the South Fork. This was for the purpose of finding a shorter route for the supply of the army at Knoxville.

The following extracts from a letter from General Thomas to the Superintendent of the Coast Survey refer to a portion of the service just mentioned, as having been rendered by officers of the Coast Survey:—

"Permit me to thank you most cordially for your kindness in placing under the direction of Brigadier-General W. F. Smith, Chief Engineer, Department of the Cumberland, Messrs. P. C. F. West, Clarence Fendall, F. W. Dorr, and J. W. Donn, officers of the Coast Survey Service. In the short time they have been on duty at these Head-Quarters, they have rendered most valuable service in reconnoitring, surveying, and mapping the country." * * * * *

"I shall desire to retain these officers, with General Smith, as long as you can spare their services."

Service with the Mississippi Squadron was not intermitted. A large party of the Coast Survey was, for the third consecutive season, placed at the disposal of Admiral Porter. During the third season, which lasted from the beginning to the middle of 1864, the party executed a reconnoissance map between Rodney and Palmyra, comprising about fifty miles of the course of the Mississippi, delineating its main channels and bars, with the cultivated ground and swamps on its banks, the towns, landing-places, and roads leading towards the interior of the country. They made a topographic and hydrographic survey of Grand Gulf, Miss. The survey of Vicksburg was also completed. On the Ohio, between Cairo and Mound City, they made another topographic and hydrographic survey. One of the party accompanied the Red River Expedition. The light-draught steamer used to penetrate the shallow streams was often waylaid and riddled with rifle-balls. Another vessel, with surveyors on board, was once obliged to engage a battery in position near Gaines's Landing, on the Arkansas shore of the Mississippi. She was struck nine times with solid shot or shell.

We have now fairly entered the year 1864, the last work described having continued until June.

In the East, before that time, came the last famous advance on Richmond, when General Grant intended to fight it out on that line, if it took all summer. Sooth to say, he did not fight it out on that line, and it took not only summer, but autumn and winter. But with opening spring, and, as if by enchantment, the promise of the year before blossomed, bloomed, and bore glorious fruit.

During the direct advance against Richmond, Major-General W. F. Smith moved his command to the head of York River. From thence, with twenty men as an escort, the Coast Survey officer who had served on his staff at Chattanooga, was dispatched to open communication with the army of General Grant. This commission was successfully executed, and the command participated in the battles at Cold Harbor.

During the summer campaign of 1864, in the East, an officer of the Coast Survey accompanied the army of Major-General Butler, in the movement on Bermuda Hundred. He made several surveys, adding much to the military map of South-eastern Virginia.

In June, an officer of the Coast Survey was detailed to join the squadron of Admiral S. P. Lee, in James River. He took advantage of a temporary abandonment of the Howlett House Battery, and sounded the upper part of the river, usually swept by the enemy's guns. The use of obstructions in the river having been decided upon, the duty of determining the line which they should occupy devolved on him. In the spring of 1864, just before the advance of General Sherman,—the grand march which will be famous in history,—his Chief Engineer, Captain O. M. Poe, Corps of Engineers, wrote as follows to J. E. Hilgard, Esq., Assistant in charge of the Coast Survey Office:—

"I have just received yours of the 26th of April, enclosing proof-sheet of map of Northern Alabama and Georgia." * * *

"I am directed by General Sherman, commanding the Military Division, to perform the very pleasant duty of thanking the Coast Survey for the promptness with which the map was gotten up, and its fine appearance. It will be the standard during the campaign upon which we have just entered." * * *

In Shenandoah Valley, during the campaign in the fall of 1864, an officer of the Coast Survey was attached to the staff of General Emory, and executed reconnoissance, and often superintended the construction of breast-works.

At the request of Quartermaster-General Meigs, a minute topographical survey was made on the estate at Arlington, Va., with a view to the adoption of the ground as a National Cemetery.

During the winter of 1864–'65, an officer of the Coast Survey was actively engaged as Engineer to the Naval Dépôt Com-

mission, at Louisville, Mound City, Cairo, St. Louis, Carondelet, and Memphis. The Report made to Congress by the Commissioners, Rear-Admiral Davis, Colonel Bowman, Corps of Engineers, and G. W. Blunt, Esq., is accompanied by the maps executed by the Engineer to the Commission.

Under directions from Admiral S. P. Lee, the same officer, with a party, has made a reconnoissance map of Tennessee River, from Paducah to Clifton, one hundred and fifty-three miles. It will be continued to Florence. This map is of the greatest value, for the police of the river; as, in addition to the topography and hydrography, it comprises copious notes in regard to the stages of water, and other information useful for vessels patrolling the stream.

The Coast Survey steamer *Bibb*, with a schooner as tender, continued to serve with the South Atlantic Blockading Squadron. As soon as Savannah was captured by General Sherman, the approaches to it by Ogeechee, Wilmington, and Savannah Rivers, were examined, buoyed, and lighted. Torpedoes were removed, and the Rebel fortifications were mapped. Subsequently, while sounding off Battery Bee, Charleston Harbor, the *Bibb* narrowly escaped destruction from a torpedo.

On the occasion of the first attack upon Fort Fisher, Admiral Porter, in his Report, thus speaks of an officer of the Coast Survey, in connection with the attempt to damage the fort by exploding the celebrated torpedo-boat:—

"On the 23d, I directed Commander Rhind to proceed and explode the vessel right under the walls of Fort Fisher; Mr. Bradford, of the Coast Survey, having gone in at night, and ascertained that we could place a vessel of seven feet draught right on the edge of the beach." * * *

"I enclose herewith the report of Commander Rhind, with the names of the gallant fellows who volunteered for this desperate service. Allow me to mention the name of Mr. Bradford, of the Coast Survey, who went in and sounded the place where the *Louisiana* was to go in, and has always patiently performed every duty he has been called on to carry out."

Two officers of the Coast Survey, with their Aids, accompanied the march of General Sherman. The enemy made so little opposition, that one of the officers, in reporting his arrival at Goldsboro', wrote to the Coast Survey Office in Washington: "Our march has been so rapid, that our services have only been required at rare intervals." In a subsequent letter, he announces that he and his brother officer had finished a map of the vicinity of Goldsboro'.

Surveying has continued in Maryland and Virginia. For military and naval purposes, numerous inlets on the Southern coast have been repeatedly sounded, to keep pace with changes in the depth of water. The Corps of Engineers has been often indebted to the Coast Survey for topography specially executed to facilitate the construction of fortifications. Coast Survey

vessels have combined with the Light-House Service, in insuring safety to our numerous vessels engaged on the coast. Buoys have been set, or re-set, and signal-lanterns often placed for navigation or attack by night. The compasses of iron vessels and iron-clads have been adjusted. The Tax Commissioners in Florida have received topographical aid. In addition to these and other special duties, the regular work of the Coast Survey has been carried on, wherever feasible.

The Coast Survey Office, in all its divisions, has been indefatigable in its contributions to the necessities of the times. To the Army and Navy, and to every accredited quarter, information has been promptly furnished. In Coast Survey charts alone, sixty-five thousand, nine hundred and seventy-one copies were distributed during 1863 and 1864.

With this account, which, lengthy as it may appear, is but a meagre notice of the various Coast Survey operations which have benefited the country during the war, further details must be omitted, lest the space allotted to this paper be too much curtailed to admit of a few concluding matters of a general character.

Brigadier-General Totten, Chief of the Corps of Engineers, in his Report on the defences of the Western coast, says:—

"I would here mention, as one of the many services rendered by the United States Coast Survey operations to the defensive system of the country, that it is to explorations of Coast Survey parties we are indebted for the hint of a probable line of defence across these deep inlets and sounds."

Even in diplomacy, a realm, one would suppose, far beyond cognizance of surveying, the aid of the Coast Survey has been sought. The following letter to the Superintendent of the Coast Survey, from F. W. Seward, Esq., Assistant Secretary of State, indicates the manner in which such aid could subserve the interests of the country:

"In the early part of the Rebellion, the Department found it convenient and useful to transmit to the Diplomatic and Consular officers of the United States at the principal places in foreign countries, a map showing the progress of the Union armies in crushing the Rebellion. During the present month, a review of the operations of the war, on sea and land, has been prepared and sent to many of our agents abroad. A few only of the maps prepared, as it is believed, at your office, which were intended to accompany it, were received in time to be transmitted with this review.

"The public interest would be promoted if the Department could receive from your office three hundred additional copies of the map above mentioned."

Wisely did Professor Agassiz speak when, in one of his scientific papers, he thus referred to the agitation of the question as to the discontinuance of the Coast Survey: "Even without reference to their practical usefulness, it is a sad sign when a nation sacrifices first her intellectual institutions." The previous action of Congress showed that its views coincided with

this expression of opinion. In ten or fifteen years the survey of the coast will be completed. Then we shall have a work as peerless as the domain whose confines it represents. So far from relinquishing geodetic surveys, geological surveys should be added to them. Late events point to the strange fact that, in parts of the country, many a man dwelt in penury, while beneath his little patch of land lay fabulous treasure.

In the summer of 1864, the Superintendent of the Coast Survey experienced a sudden attack of illness. His duties, usually arduous, became doubly so after the commencement of the Rebellion. There is a limit to all endurance; but he did not seem to know that he had attained his possibility. In addition to the superintendence of the Coast Survey, he accepted positions on boards convened for purposes connected with the war. He was Vice-President of the Sanitary Commission. He was any thing that he was asked to be, if he thought that it would serve the cause. His burdens had always been so heavy, that one thing more seemed but a trifle. He needed rest and relaxation. Change of air and scene have already restored him to better health.

It was with unaffected concern that all connected with the Coast Survey, or intimate with him, heard of his indisposition. At the last meeting of the Scientific Association, his absence occasioned general regret. Some excellent lines, in which there is a verse alluding to it, appeared in the *Atlantic Monthly*. The verse may be here appropriately transcribed:—

"Declare now, Clio! 'mid this gifted band,
Who held the reins?—what scientific hand?
Did He preside? Did Franklin's honored heir
With wonted influence possess the chair?
No: bowed with cares, a servant of the State,
In loftier fields he held his watch sedate:"
"Bache could not come,—for us a mighty void!
Yet well for him,—for he was best employed
High on his tented mountain's breezy slope,
Might but those maidens meet him—Health and Hope!"

Shall we now compute the amount to which the Coast Survey has been instrumental in aiding the Government in the suppression of the Rebellion? Impossible! The character of the aid renders it insusceptible of computation. It is interwoven with every operation that has engaged our arms. That which is unquestionable is, that without the information furnished by the archives of the Coast Survey, and without its co-operative labors bestowed in the field and afloat, the operations of both Army and Navy would often have been attended with vastly increased expenditure, toil, and loss of life. Whether the Coast Survey has, or has not, done something for the war, is a question which may now be safely left to the verdict of the public.

"The truth is, no intelligent American can afford not to read it."—*Boston Transcript.*

The United States Service Magazine

THE OFFICIAL EXPONENT OF MILITARY AFFAIRS.

The decided success of the "SERVICE MAGAZINE" proves the necessity that existed for a publication of its kind, and the completeness with which it has supplied that need. It has been received with the utmost cordiality by the reading public throughout the country, and has taken a front rank in our periodical literature.

Although bearing a distinctively military title, it is not merely a technical work, but is filled each month with just such information as every intelligent reader now needs. Explaining and criticising as it does all Military and Naval movements, and noting all improvements in the implements of war, and in the organization of Armies and Navies, it also records narratives of personal experience, and stories of Military and Naval life that are more thrilling and interesting than works of fiction. While the accounts of Battles and Campaigns, written by officers personally engaged in them, furnish truthful information not otherwise attainable, and of absorbing interest to all. Its pages contain

Military History, Army and Navy Organization, Sketches of Battles, Sieges and Campaigns, Biographical Sketches of the Great Leaders, with Portraits, Military Criticisms, Scientific Articles, Suggested Changes and Improvements, Literary Articles, Poetry, Reviews of New Books.

IN THE EDITOR'S SPECIAL DEPARTMENT is found, each month, a condensed and graphic History of the War, with valuable correspondence from officers in the Field. And in the "OFFICIAL INTELLIGENCE," a monthly record (furnished by the War and Navy Departments) of all Promotions, Changes, Dismissals, Discharges, &c., in the Service—a record of the greatest interest to all having friends or relatives in the Army or Navy.

It has the most cordial endorsement and support of the entire Military and Naval establishment, numbering among its subscribers almost every prominent Officer in both Services.

No more acceptable present to a friend in the Army or Navy

can be made, than a year's subscription to THE UNITED STATES SERVICE MAGAZINE.

TERMS—$5 00 a year. A specimen Number sent post-paid, for 50 cents. The January Number began a new volume. All back numbers can be supplied.

Address,

C. B. RICHARDSON, Publisher,
540 BROADWAY, NEW YORK.

FROM LIEUTENANT-GENERAL GRANT.

The UNITED STATES SERVICE MAGAZINE is published in the service of the armies, and is intended to keep a truthful record of events as they pass. It will be one of the most valuable works published, from which to make up the history of the Great Rebellion in after years. I know the editor—Professor Coppée—well, and believe a better selection for the post could not have been made.

Every person interested in the success of our arms, who is able, should take this Magazine and preserve it for future reference.

U. S. GRANT, Lieut.-General.

CITY POINT, VA., Jan. 2, 1865.

UNITED STATES COAST SURVEY.

WASHINGTON, *October* 10, 1865.

SIR: The estimates for the deficiency in appropriations for the survey of the coast for the fiscal year 1865–'66, together with those for the fiscal year 1866–'67, are herewith respectfully submitted, and I have the honor to request that if approved, they may be included in your estimates for appropriations.

In regard to the deficiency it is only necessary to state that the late Congress failed to pass the general appropriation bill, in which the items for the coast survey were included. No appropriation, therefore, was made for the fiscal year 1865–'66. The work has been continued with the unexpended balance of previous appropriations, and some aid afforded by the Treasury Department. During the progress of the bill in the late Congress, the estimates for the work of the survey had been approved by both houses, and the amounts now estimated for are intended to meet the expenditures for the remainder of the present fiscal year, upon the same scale of appropriation.

The following is a brief sketch of the progress made during the past year. While the war continued, a number of parties were connected with government commands, and rendered efficient aid in naval and military operations, as during the preceding years.

Four parties were attached to the South Atlantic blockading squadron, so as to be available also for service in the military department of the south. The labors of these comprise a complete resurvey of the bar and channels leading into Charleston harbor; a survey of the inside water passages between St. Helena and Port Royal sounds, and a survey of Broad river and the Whale branch to Port Royal ferry; of the Wilmington and Thunderbolt rivers, and other communications between the Savannah river and Ossabaw sound, including among them the dependencies of Wassaw sound; a survey of the rebel defences of Charleston and Savannah, the latter embraced within an extended reconnoissance of all the approaches to that city. In this same district, and under instructions of the Light-house Board, the parties have replaced lights, beacons, and buoys, as their places were re-occupied by the national forces. The entrance to Darien was examined and buoyed, for the transportation of released Union prisoners.

Four topographers of the coast survey accompanied General Sherman's army in the march from Savannah to Goldsboro', and rendered effective aid in making reconnoissances.

Two parties were connected with the North Atlantic blockading squadron One of these, after assisting in the operations against the rebel defences of Wilmington, North Carolina, made a complete resurvey of both entrances to the Cape Fear river. The other relighted and buoyed the channels of that river, as also those leading into Beaufort, North Carolina, which was then important as the rendezvous of the squadron for supplies. After the close of hostilities the same party completed the hydrographic survey of the Cape Lookout shoals, and continued off-shore soundings along the coast of North Carolina.

A topographical survey of the banks of the Potomac river, from the vicinity of Washington to Harper's Ferry, has been made by a party attached to the middle military department; and two other parties have extended the detailed surveys of the approaches to Washington and Baltimore. One topographer was continued on service with the army operating in the valley of Virginia, and furnished the results of reconnoissances at Flint Hill and Cedar creek, after serving in battle at both places. Another remained on duty with the army of the Tennessee, and has mapped the defensive ground and approaches to

Lookout mountain, and extended the survey of the battle-field of Chickamauga.

In connexion with the Mississippi squadron, a party of coast survey officers have made a valuable reconnoissance map of over two hundred miles of the Tennessee river, or from its mouth to the Muscle shoals; a map of the lower Ohio from Paducah to Cairo; and a map of about ninety miles of the course of the Mississippi river from Cairo up to St. Mary's. This work necessarily ceased when, owing to the reduction of the squadron in the western waters, a vessel was no longer available for the uses of the party. It may be hoped, however, that the great and obvious usefulness, in a national point of view, of a reliable map of the Mississippi river may lead Congress to make a special appropriation for the further prosecution of that work. A stretch of forty-five miles of the river was mapped last year above and below Vicksburg, and thus an important part of the Mississippi has already been surveyed without involving any public expenditure that would not otherwise have been incurred.

In the regular progress of the survey of the Atlantic coast, parties have been at work on the coast of Maine during the summer and autumn, in Passamaquoddy, Gouldsborough, Frenchman's and Penobscot bays, in Muscongus sound, and in the Medomak, Damariscotta, and New Meadow rivers; on the shores of Narragansett bay and its dependencies, in Rhode Island; and on the coast of New Jersey. The connexion of the primary triangulation in Sections I and II has been completed by the Superintendent's party.

On the western coast, the triangulation between San Francisco and Monterey bays has been completed; that of Suisun bay has been continued; the topography between Point Año Nuevo and Point San Pedro, and the off-shore hydrography south of San Francisco entrance have been continued, and the topography and hydrography of Koos bay have been completed.

An early resumption of the work on the coast of the southern States is contemplated, and is provided for on a moderate scale in the estimates herewith presented.

The table appended gives the amounts estimated to supply the deficiency for the fiscal year 1865–'66, in parallel columns, with the estimates which were originally submitted for the whole fiscal year, and which, though approved by both houses of Congress at the last session, failed to become a law before the expiration of that session.

Object.	Estimate for fiscal year 1865–'66, but not appropriated.	Estimate for deficiency.
For survey of the Atlantic and Gulf coasts of the United States, including compensation of civilians engaged in the work, per act of March 3, 1843	$181,000	$120,000
For continuing the survey of the western coast of the United States, including compensation of civilians engaged in the work, per act of September 30, 1850	100,000	75,000
For continuing the survey of the reefs, shoals, keys, and coast of south Florida, including compensation of civilians engaged in the work, per act of March 3, 1849	11,000	11,000
For publishing the observations made in the progress of the survey of the coast of the United States, including compensation of civilians engaged in the work, per act of March 3, 1843	4,000	4,000
For repairs of steamers and sailing schooners used in the survey, per act of March 2, 1853	20,000	20,000
For pay and rations of engineers for three steamers used in the hydrography of the coast survey, no longer supplied by the Navy Department	6,000	6,000
Total	322,000	236,000

During the rebellion the usual field operations of the coast survey were necessarily somewhat restricted. In the southern sections they were carried on only as far as requisite and practicable in connexion with the operations of the naval forces. In most cases when the assistants and aids have served with military or naval commands, the working parties have been furnished from the command, and only the pay and subsistence of the officers of the survey have been chargeable to the coast survey appropriations. So also the vessels of the survey, when serving with squadrons, have been supplied with coal and kept in repair by the Navy Department.

Under these circumstances a corresponding reduction in the estimates for the work of the coast survey was made, which, from considerations of economy, was extended to the work on the western coast. The appropriations, amounting to over four hundred and fifty thousand dollars in 1860, were reduced, in accordance with the estimates submitted, to about three hundred thousand dollars during the several years of the war.

The estimates herewith presented for the fiscal year 1866–'67 approach more nearly to the scale of expenditure before the war. They contemplate the continuance of work in the southern sections, which, besides being called for to aid in the development of the resources of that part of our country, will be conducive to economy, since it will, as formerly, enable the same parties to push the work on the southern coast during winter, after closing work for the season at the north. Without any material increase in the salaries and office expenses, the amount of field-work accomplished will be far more than proportionably augmented.

Owing to the great increase in the price of labor and supplies of every kind, the appropriations asked for, although the same in amount of the two principal items as those for 1860–'61, will not be equivalent to the latter, yet they are as low as is consistent with an economical prosecution of the work in the several localities where it has been commenced.

The item providing for the continuation of the survey of the Florida reefs and keys has been diminished from forty to twenty-five thousand dollars, because that important work is proportionally far advanced towards completion. The item providing for repairs of vessels, on the contrary, is unavoidably increased by reason of the great increase in the cost of such repairs, and because a larger amount of refitting is at present necessary, on account of the greater wear and tear during the war.

The estimates for progress on the Atlantic, Gulf coast, Florida reefs, and western coast of the United States are given, as usual, in separate items, and are preceded by a detailed statement of the progress contemplated in the several sections of the work.

Estimates in detail.

For general expenses of all the sections, namely: rent, fuel, materials for drawing, engraving and printing, and for transportation of instruments, maps and charts; for miscellaneous office expenses, and for the purchase of new instruments, books, maps and charts $21,000

SECTION I. *Coast of Maine, New Hampshire, Massachusetts and Rhode Island. Field-work.*—To continue the triangulation of *Passamaquoddy bay*, and extend it so as to include the northeastern boundary along the *St. Croix river;* to complete the secondary triangulation of the coast of Maine, west of *Mount Desert island;* to continue the topography of *Passamaquoddy bay* and its dependencies; to continue that of *Gouldsborough bay*, that of the islands at the entrance of *Penobscot bay*, and the western shore

of the bay above *Camden;* that of the adjacent shores of *Muscongus sound* and *Medomak river;* to complete the topography of the *Damariscotta river*, and the survey of the eastern shores of *Casco bay;* to continue that of the coast of *New Hampshire*, between *Great Boar's Head* and *Portsmouth*, and to complete that of the shores of *Massachusetts bay* between *Sandwich* and *Plymouth;* to continue the detailed survey of the shores and islands of *Narragansett bay;* to continue off-shore soundings along the coast of Maine, and the hydrography of *Passamaquoddy bay, Frenchman's bay, Gouldsborough bay, Prospect and Winter harbors*, and the approaches to *Penobscot bay;* to continue tidal and magnetic observations at Portland, and tidal observations in the progress of the hydrography. *Office-work.*—To make the computations required for, and reductions from, the field observations; to continue the drawing of coast chart No. 1, *Passamaquoddy bay;* to continue the drawing and engraving of coast chart No. 6, approaches of *Penobscot bay;* of No. 7, *Pemaquid Point* to *Cape Elizabeth;* of No. 8, approaches to *Casco bay;* of No. 10, coast of Massachusetts from *Cape Ann* to *Plymouth;* of No. 11, *Cape Cod bay*, and of No. 14, *Narragansett bay and approaches;* to continue the drawing and engraving of general coast chart No. 1, *Quoddy Head, Me., to Cape Cod, Mass.;* to complete the drawing and engraving of charts of *Rockland, Camden* and *Rockport harbors;* to continue the drawing and engraving of *Eastport harbor, Winter harbor, Tennant's harbor* and *Herring gut*, of *St. George's river*, and *Muscle Ridge channel*, and of the *Damariscotta river;* and to complete the drawing and engraving of charts of the *Sheepscot river, Me.*, of *Newport harbor*, and of *Providence river, R. I.*, and to engrave the resurvey of *Boston harbor*, will require.. $43,000

SECTION II. *Coast of Connecticut, New York, New Jersey, Pennsylvania, and part of Delaware. Field-work.*—To make supplementary astronomical observations to continue the triangulation of *Connecticut river*, between Higganam and Hartford, and that of the *Thames river* above *New London;* to continue verification work on the *coast of New Jersey*, south of Absecom inlet; to continue the topography of the shores of the *Connecticut;* to execute such supplementary hydrography as may be required in *New York bay and Delaware bay;* to continue the tidal observations. *Office-work.*—To make the computations and reductions; to complete the engraving of coast chart No. 21, *New York harbor* and its approaches, (new edition,) and to commence the drawing and engraving of coast chart No. 22, from *Sandy Hook to Barnegat;* and to complete the engraving of coast chart No. 28, from *Cape May, N. J.*, to *Isle of Wight, Del.*, will require.... 15,000

SECTION III. *Coast of part of Delaware and that of Maryland and part of Virginia. Field-work.*—To continue astronomical and magnetic observations in the section, and secure the stations of the triangulation; to make extensions of the triangulation for including the detached plane-table surveys in the vicinity of *Washington city;* to complete the topography near *Washington*, required for defensive purposes, and continue that of the eastern shore of Virginia; to make such detailed surveys as may be necessary at points on the *Potomac, Rappahannock, and James rivers;* and to continue the off-shore hydrography and tidal observations in the section. *Office-work.*—To make the computations

from field-work; to continue the engraving of *coast chart* No. 29, (from *Isle of Wight, Del., to Chincoteague, Va.,*) and of No. 30 (from *Chincoteague to Great Machipongo inlet, Va.;*) to continue the engraving of coast chart No. 30 *bis.*, (*Chesapeake entrance,*) and *general coast chart* No. IV, (approaches to Delaware and Chesapeake bays;) and to commence the drawing and engraving of a chart of *James river* from *Newport News* to *City Point*, will require $20,000

SECTION IV. *Coast of part of Virginia and part of North Carolina. Field-work.*—To complete, if practicable, the primary triangulation of *Pamlico sound*, and make the requisite astronomical and magnetic observations; to continue the triangulation of *Pamlico river;* to continue the triangulation and topography of the shores of *Neuse river;* to complete the topography of the outer coast of *North Carolina*, between *Hatteras inlet* and *Core sound;* to continue the in-shore and off-shore hydrography in the vicinity of *Cape Lookout;* and to execute that of *Pamlico river*, and such other soundings as may be required in the waters of *Pamlico* and *Albemarle sounds;* to make observations of the tides and currents. *Office-work.*—To make the computations and reductions; to continue the drawing and commence the engraving of general coast chart No. V, from Cape Henry to Cape Lookout; to continue the engraving of *coast chart* No. 38, (from Currituck, Va., to New inlet, N. C.,) and of *coast charts* Nos. 46 and 47, (from Cape Lookout to Barren inlet,) and the drawing and engraving of charts of *Pamlico sound*, and of the *Neuse and Pamlico rivers;* and to complete the engraving of *coast chart* No. 48, Cape Fear and approaches, will require 30,000

SECTION V. *Coast of part of North Carolina and that of South Carolina and Georgia. Field-work.*—To continue the secondary triangulation of the coast of *Georgia;* to continue the topography of *Port Royal sound*, and of the islands and interior passages between it and *St. Helena sound;* to continue that of the shores of *Wassaw sound* and *Ossabaw sound* and of the rivers connecting them, and to join with the work on the passages from *Savannah river;* to complete the resurvey of *Charleston bar* and of the entrance to *Savannah river;* to complete the hydrography of *Wassaw sound* and its dependencies, connecting with *Tybee entrance* and *Savannah river*, and if practicable, to begin that of *St. Andrew's sound;* to connect the hydrography of *Doboy entrance* with the in-shore work between *Capelo and St. Simon's;* to continue the tidal observations at *Hilton Head* and *St. Mary's river entrance. Office-work.*—To continue the engraving of coast chart No. 53, (from Rattlesnake shoal to St. Helena sound, S. C.;) to continue the drawing and engraving of No. 54, (from Fripp's inlet, S. C., to Ossabaw sound, Ga.;) to continue the drawing of No. 57, (from Sapelo sound to St. Andrew's sound, Ga.,) and that of *general coast chart* No. VII, (from Winyah bay, S. C., to St. John's river, Fla.,) and continue the engraving of the last-named chart; the resurvey of *Charleston harbor entrance*, and the drawing and engraving of the inland passages between St. Helena and Port Royal sounds, S. C., and of Wassaw sound, and the inland tide-water communications on the coast of Georgia, will require 32,600

SECTION VI. *Coast, keys, and reefs of Florida.*—(See estimates of appropriation for these special objects.)

SECTION VII. *Part of the western coast of the Florida peninsula and part of the northern coast of Florida. Field-work.*—To continue the triangulation from the *Auclote keys* towards *Tampa bay*, and from *Cape St. Blas* towards *St. Andrew's bay;* to complete the triangulation across the neck of the peninsula from *Fernandina* to *Cedar keys;* to make such astronomical and magnetic observations as may be practicable in the section; to continue the coast topography from *Bayport* southward, and that of the shore of *St. Vincent's sound* westward towards *Cape San Blas;* to re-examine the hydrography of the entrance to *Appalachicola* and *St. Mark's;* to complete the hydrography of St. George's sound, and continue that south of *Cedar keys;* to make the requisite tidal observations. *Office-work.*—To deduce results by computations; to continue the drawing and engraving of coast chart No. 81, coast of Florida, from *Chassahowitzka river* to *Cedar keys;* to complete the drawing of No. 85, *St. George's sound*, (eastern part;) to continue the drawing and commence the engraving of off-shore chart No. XIII, coast of Florida, from *Waccasassa river* to *Choctawhatchee river*, and that of coast chart No. 84, Florida coast, from *Ocilla river* to *Crooked river*, (St. George's sound,) will require..... $30, 000

SECTION VIII. *Coast of Alabama, Mississippi, and part of Louisiana. Field-work.*—To continue the astronomical (including longitude) and magnetic observations required in the section; to complete the triangulation and topography of the *Mississippi delta*, and extend the survey up the river towards *New Orleans;* to commence the triangulation at *Point au Fer*, and extend it towards *Ship shoal* and *Isle Dernière*, and to keep up the topography; to continue the hydrography of *Chandeleur* and *Isle au Breton sounds;* to complete that of the *Mississippi Passes* and of *Lake Pontchartrain*, and to make the tidal and current observations required. *Office-work.*—To continue computations; to continue the drawing and engraving of off-shore chart No. XIV, Gulf coast, from *Choctawhatchee river to the Mississippi delta;* to continue the drawing and engraving of the chart of *Lakes Borgne* and *Pontchartrain*, (coast chart No. 93,) and to commence that of the *Mississippi delta*, (coast chart No. 96,) will require..... 32, 000

SECTION IX. *Part of the coast of Louisiana and coast of Texas. Field-work.*—To make the requisite astronomical and magnetic observations, and to measure, if practicable, a primary base line and one of verification; to continue the triangulation of *Madre lagoon* and *Padre island* southward towards the boundary; to continue the topography of *Nueces* and *Corpus Christi bays*, and that of the coast southward; to complete the hydrography of *Matagorda bay* and its dependencies; to make the tidal observations required. *Office-work.*—To make computations; to complete the drawing and continue the engraving of coast map and chart No. 108, *Matagorda* and *Lavaca bays;* to complete the topographical drawing of No. 109, Gulf coast, from *Matagorda* to *Aransas Pass*, and the engraving of Nos. 106, 107, and 108, between *Galveston and Matagorda entrances*, and to continue the drawing of off-shore chart No. XVI, Gulf coast, from *Galveston to the Rio Grande*, will require..... 27, 000

Total for Atlantic coast and Gulf of Mexico..... 250, 000

The estimates for the Florida coast, keys, and reefs, and for the western coast of the United States, are intended to provide for the following progress:

SECTION VI. *Coast, keys, and reefs of Florida. Field-work.*—To continue the triangulation of *Indian river* and adjacent coast northward; to make such astronomical and magnetic observations as may be requisite and practicable in the section; to complete the triangulation of *Sarasota sound*, and to commence that of *Tampa bay;* to follow the triangulation of *Indian river* and the coast adjacent with the topography; to complete the topography of the southern keys; to follow the triangulation of *Savasota sound* by the topography; to continue the hydrography between the *Dry Tortugas* and *Key West*, and to run off-shore lines from the reefs and coast of this section; to continue the hydrography of *Charlotte harbor* and its approaches; and to keep up the magnetic observations at *Key West. Office-work.*—To compute results from field records; to continue the drawing and commence engraving of off-shore chart No. XI, western part of Florida reefs, including the *Tortugas;* complete the engraving of chart No. 70, *Florida reefs*, between *Long key* and *Newfound Harbor key;* to complete the engraving of the chart of *Charlotte harbor entrance*, and commence that of *San Carlos bay;* to commence the drawing of coast map and chart No. 64, *Florida coast*, between *Jupiter inlet* and *Indian River inlet*, will require..... $25,000

SECTION X. *Coast of California. Field-work.*—To continue the coast triangulation southward of the *San Pedro base*, or northward of *Santa Barbara*, and the work for connecting the *Santa Barbara* islands by triangulation with the coast of California; to continue the triangulation northward from *Bodega*, and to execute that of *Suisun bay;* to continue the topography of the islands in *Santa Barbara channel*, that of the shore of *Bahia Ona*, that of the coast north of *Bodega Head*, and to complete that of *Suisun bay;* to complete the hydrography of *Suisun bay;* to run off-shore lines of soundings from the principal headlands of the section; to extend the in-shore hydrography northward of *Bodega*, and re-examine bars subject to change in *San Pablo bay;* to continue tidal observations at *San Diego* and *San Francisco. Office-work.*—To make the computations from field-work; to complete the drawing and engraving of a chart of *Halfmoon bay;* the engraving of the resurvey of *Mare Island straits*, and of the upper sheet of *San Francisco bay*, and of a chart of *Suisun bay;* to continue the drawing and engraving of a *general coast chart of the Pacific*, (from San Diego to Point Conception,) of a chart of *San Francisco bay*, to be issued in one sheet, and of a chart of the coast from *Point Pinos* to *Bodega Head.*

Also, for the operations in—

SECTION XI. *Coast of Oregon and that of Washington Territory. Field-work.*—To make the astronomical and magnetic observations required in this section or in Section X; to continue the triangulation of *Washington sound* in connexion with former work, and to make such plane-table surveys in continuation of previous work as may be practicable; to continue the hydrography in *Admiralty inlet;* to execute soundings in special localities of Oregon or Washington Territory, as may be called for by public

interests; to continue tidal observations at *Astoria*, and make such as may be required by hydrography. *Office-work.*—To continue the computations of field-work; to continue the drawing and engraving of surveys, as far as now made, for charts of *Koos bay, Gray's harbor, Washington sound, Admiralty inlet,* and *Puget's sound*, will require $130,000

For publishing the observations made in the progress of the survey of the coast of the United States, per act of March 3, 1843 5,000

For repairs of steamers and sailing schooners used in the survey, per act of March 2, 1853 20,000

For pay and rations of engineers for the steamers used in the hydrography of the coast survey, and no longer supplied by the Navy Department 10,000

The subjoined table exhibits in parallel columns the appropriations made before the war, those during the war, and the estimates now submitted for the fiscal year 1866–'67:

Object.	Appropriated 1860–'61.	Appropriated 1864–'65.	Estimates for 1866–'67.
For survey of the Atlantic and Gulf coasts of the United States, including compensation of civilians engaged in the work, per act of March 3, 1843	$250,000	$178,000	$250,000
For continuing the survey of the western coast of the United States, including compensation of civilians engaged in the work, per act of September 30, 1850	130,000	100,000	130,000
For continuing the survey of the reefs, shoals, keys, and coast of south Florida, including compensation of civilians engaged in the work, per act of March 3, 1849	40,000	11,000	25,000
For completing the line to connect the triangulation on the Atlantic coast with that on the Gulf of Mexico, across the Florida peninsula, including compensation of civilians engaged in the work, per act of March 3, 1843	5,000	.....	.....
For publishing the observations made in the progress of the survey of the coast of the United States, including compensation of civilians engaged in the work, per act of March 3, 1843	5,000	4,000	5,000
For repairs of steamers and sailing schooners used in the survey, per act of March 2, 1853	10,000	4,000	20,000
For fuel and quarters, and for mileage or transportation, for officers and enlisted soldiers of the army serving in the coast survey, in cases no longer provided for by the quartermaster's department, per act of August 31, 1852	5,000	.....	.....
For pay and rations of engineers for steamers used in the hydrography of the coast survey, no longer supplied by the Navy Department	12,800	9,000	10,000
Total	457,800	306,000	440,000

Respectfully submitted,

A. D. BACHE,
Superintendent United States Coast Survey.
Per J. E. HILGARD,
Assistant, in charge of office.

Hon. HUGH McCULLOCH,
Secretary of the Treasury.

NEW YORK HERALD, MONDAY, AUGUST 1, 1881.

THE COAST SURVEY.

Growth and Importance of a Great but Little Understood Work.

THE FOUR SUPERINTENDENTS.

What Hassler Began and Bache, Peirce and Patterson Pushed On.

TWO OCEAN FRONTS CHARTED.

Next in importance after the settlement of a new country come the delineation of its boundaries and the determination of its extent. In the rude days of the pioneers, when "first come was first served" (that is, helped himself), boundary lines were, necessarily, wonderfully elastic, and a matter of twenty or fifty miles one way or another was of small moment. The grants to the first settlers of our own land show a delightful disregard of the surveyor's rules and lines, inexpressibly gratifying in these days of chains and measurements, when every foot of ground is eagerly sought after, fiercely fought for and yielded only at the last extremity. Think only of the grant of Virginia, which extended "westward to the Pacific Ocean!" But those old monarchs were liberal to a fault—with other people's goods—and must have thought, too, that the two oceans were about one or two hundred miles apart. The patentees (for that which cost them nothing save a little solicitation) took little thought except to obtain colonists as speedily as possible to found a new Empire for themselves or to bring gold to their coffers. But the sturdy mariners who had to sail those coasts in their wretched little craft were soon made aware of the necessity of something better than their earlier haphazard methods to enable them to carry the "gentlemen adventurers" safely to and fro. So, at a very early day, rude charts began to be drawn; from those pricked upon a bullock's horn (like Salvation Yeo's) to the more elaborate and highly ornamental productions of Champlain and John Smith. Self-preservation is a wonderful incentive; and so, year by year, the charts became more valuable, the curves of the coast more accurately drawn, and some crude attempts were made at marking boundary lines on shore. The presence on the border of an audacious and unscrupulous enemy also stirred up the people to find out what were their own actual boundaries; and these once settled in their minds and (more or less correctly) on paper, [illegible] upon proper respect for them. Rude charts showing the depths of water on the coast and in the harbors, were made from time to time by the war ships of the three great nations who then claimed dominion on these shores; rocks and reefs were laid down with reasonable fidelity to truth; the great Nantucket shoals and the now famous George's Bank were made familiar to mariners; but there was not a lighthouse nor a buoy from Maine to Texas. When we think of these things we must wonder "how they 'scaped killing" who sailed up and down this dreaded coast.

THE FIRST STEP.

After the colonies had gained their independence progress in the direction of surveying was slow. The country must first recuperate; must begin "to feel its legs" again, and see its people secure of bread and beef to eat and cotton and wool to cover their nakedness ere she could trouble her mind about matters of minor importance. In a new country agriculture must always precede commerce; so it took twenty-four years after peace had been declared to arouse the young government to a sense of its necessities. Washington, the surveyor, had been dead eight years. Doubtless, had he lived, he would have urged upon his countrymen the speedy application of the principles of his favorite science to the delineation of their dangerous coast; but it was under Jefferson, his successor, that the first timid attempts were made. In 1807 an appropriation was made by Congress, and thus arose the great national public work now known as the United States Coast and Geodetic Survey.

A LITTLE UNDERSTOOD DEPARTMENT.

It may seem strange that so important a work as the survey of our own coasts should be as a sealed book to the large majority of the people; yet so it is. Probably there is no department of the government about which so little is known. To many its very existence is unknown; many are ignorant of its character and scope, while to few indeed are its usefulness and the greatness of its results more than a vague notion, such as one might gain from reading of the habits of the natives of the Sahara. To the shame of the American people be it said, their own coast survey is much better known and appreciated in Europe than in the country it benefits and honors. A common error among otherwise well informed people is to confound it with the revenue marine service; others think it a branch of the navy and frequently inquire of its officers "why they do not wear their uniform on duty;" while still another class take it to be a branch of the military engineers. It is a fact that members of Congress, who (whatever our opinion of their general information) are supposed to know something of the departments to which they yearly vote the people's money—it is a fact that they have been known to write to the superintendent of the survey asking for charts of the great lakes and inquiring when particular lake surveys would be completed! Outside of the press and the National Academy of Sciences it is a matter of grave doubt whether one man in two thousand otherwise intelligent men has anything approaching to a correct idea of the nature, uses and methods of the great survey which has helped more than aught else to extend the commerce of the country and increase its wealth. Representatives from the interior have said that they had no interest in the survey because their States had no coast; and one from a seaboard State declared loudly that "his people had no use for their charts and calculations and triangles and such stuff." Yet he came from a State with a large sea coast, which has been most admirably and thoroughly surveyed and developed by the department, for which "his people had no use!" One would not care to attempt to enlighten such a man as that, but as the ignorance of a large portion of our countrymen as to the value and results of this great public work is due to the want of information set before them in such form as they are most likely to receive and use, it is proposed to attempt now to give a narrative, as concise as is consistent with clearness, of its origin, history, methods and achievements.

HISTORY OF THE SURVEY.

And first, its history:—The Coast Survey, since its

institution in 1807, has had four superintendents—Hassler, up to 1843; Bache, from 1843 to 1867; Peirce, from 1867 to 1874, and Patterson, its present head, who assumed the reins the day following Peirce's resignation. Mr. F. R. Hassler was a very prominent Swiss geometrician, and was selected as the organizer and head of the infant work in 1807. In a paper of this character it would be impossible to give in detail the number and nature of the difficulties he encountered. None but engineers, and surveyors themselves can possibly appreciate the requirements for such a position as he undertook, complicated as affairs were by the political situation at that time. Suffice it to say that having gone to Europe to procure instruments he was there detained a prisoner until 1816 on account of the war between the United States and Great Britain. Then, on his return, having but just commenced work in the vicinity of New York, Congress, ignorant then of the nature and value of the survey, refused an appropriation for its support, and finally, in 1818 (at the instance of some member from the rural districts perhaps), abolished the position of superintendent! So we remained until 1832, fourteen years, without a chart or map of our coasts or boundaries save those furnished to us by foreign nations whose navigators from time to time surveyed our shores!

HASSLER'S UP HILL WORK.

Still the brave and undaunted Hassler waited and hoped against hope; and finally, through the exertions of Mr. Southard, then Secretary of the Navy, and other equally sensible and enlightened citizens, he was once more placed in charge. He resumed work in 1833 and abandoned it only when he abandoned life. His administration of ten years resulted in giving the country a corps of skilled surveyors and topographical engineers; in the triangulation of the coast between Narragansett and Chesapeake bays; the topography of New York Bay and Harbor, and of the Jersey coast and Delaware Bay; and the hydrography or sounding of these bays and harbors, as well as the off shore soundings from Montauk Point to the capes of Delaware. Hampered as he was in his schemes for the benefit of the work he loved by the parsimony and niggardliness of Congress he still bravely persisted in his efforts to place the survey upon a proper footing. At times, however, almost heart-broken at the stolid opposition he met with on all sides, the somewhat irascible Swiss would break out into a very forcible expression. On one of these occasions, when reminded by the Solon who at the time presided over the strong box of the United States that the salary of the Superintendent was nearly as much as his (the Secretary's) own, the irate scientist is said to have given vent, with characteristic egotism, to the remark:—"Any fool, sir, can make a Secretary of the Treasury, but only God Almighty can make a Hassler!"

PROGRESS UNDER BACHE.

However, he gave way at last, and Alexander Dallas Bache, a grandson of Benjamin Franklin, succeeded him. At the time of his appointment by the President Professor Bache was the principal of the Central High School of Philadelphia, which, under the impulse of his genius for organization, had taken rank with the colleges of the land. During the twenty-four years of his administration the Coast Survey became one of the great scientific establishments of the world and was known, admired and praised by the greatest geodesists of Europe. Bache's bold mind at once led him to extend and systematize the work. No longer confined to a small belt of coast, it spread by means of separate and independent bases into every seaboard State from Maine to Louisiana, for as yet Texas was not. Triangulation, topography and hydrography were all carried on with a hitherto unknown vigor in Southern as well as Northern States, and this with increased accuracy, for the different systems of triangulation (upon which, of course, all the rest of the work depended), being finally united in one as the work progressed, proved each at last a check upon the other, and would in the end form an unbroken chain of triangles along the whole of the Atlantic and Gulf coasts. Untiring, energetic, enthusiastic, above all things imbued with an all-absorbing love for the great work in which he was engaged, Bache surmounted all obstacles, conquered all difficulties, disarmed all prejudices, until the opening of the year [illegible] found the survey a recognized power in the [illegible] Every seaboard State had now its [illegible] so vastly superior [illegible] to any of any other country as to excite amazement and call forth flattering encomiums from the greatest men in Europe. A select corps of skilled officers specially educated for the work were united with those of the army and navy in preparing these charts in the field, while Europe had been ransacked for accomplished engravers and draughtsmen of high order to prepare the surveys for publication.

THE COAST SURVEY MEN IN THE WAR.

Thus the eventful spring of 1861 found matters and an effectual stop was put to much of Bache's triumphant progress. At once the exigencies of war removed the officers of the army and navy; and the secession of nine seaboard States prevented all useful labors between Cape Henry and the Rio Grande. Congress, too, roused to a frenzy of alarm and excitement by the country's peril, looked with [illegible] thing but a favorable eye on any purely civil undertaking that needed expenditure of money. Money was for the military forces only at that time. The usual appropriation for the Coast Survey was, indeed, actually stricken from the list! But Bache was equal to the occasion. He was one of those who "out of the nettle danger pluck the flower 'safety;'" and his bold and decisive action in this emergency not only saved the survey, but contributed greatly to the triumphant success of our arms. At the expiration of "the bloody four years" the service was established upon a basis very much more stable than its best friends had ever dared to hope. From his corps of civilian assistants (who alone remained to him) he furnished the army with exceptionally gifted topographical engineers, whose services in the field in mapping the hostile country and laying out the various battle grounds, were so successful that our generals in the midst of the enemy's land moved as confidently as though in their own. To the navy were assigned officers to whom every inch of Southern coast was familiar as the streets of their native towns—skilled hydrographers, who could in a few hours determine the lines of best water in harbors from which all the buoys had been removed, and lead our fleets safely through intricate channels to the strongholds of the enemy. At the same time, although of necessity on a small scale, he continued the survey of our Northern coast, never pausing, never omitting a single detail, but moving calmly and persistently forward, as though no impediment to the regular prosecution of the work had ever occurred.

POWERFUL HELP.

Assailed in 1862 with an attempt to again reject the appropriation, he was able triumphantly to crush all factious opposition by the record of 1861, and by earnest appeals from the leaders of our forces against any legislation inimical to so valuable a branch of the public service. McClellan, from the Army of the Potomac; Dupont, from the victorious squadron at Port Royal; Farragut and Porter, from the Mississippi, vied with each other in acknowledgments and protests, and to these was later added General Butler, who, in his great troop ship, the Mississippi, proceeding to New Orleans, ran on Fryingpan Shoals, receiving serious injury. Obliged to make a refuge at Port Royal, he was there taken in charge by the Coast Survey party, the leak repaired, the vessel's bottom patched, a competent sailing master furnished and the expedition guided safely to her destined port. Surrounded with "this great cloud of witnesses" Bache went to Congress, and the result proved his wisdom and foresight. Only life-long and unreasoning enemies opposed, and from this time until the close of the war there were no further difficulties. The survey bore manfully its share of the hardships and perils of battle. No important conflict was decided, from Bull Run to Appomattox; no naval expedition undertaken, from Hatteras to Fort Fisher, without the presence of an officer of that service, aiding with his professional knowledge and sharing the danger. McClellan, Grant, Sherman, Thomas, Dupont, Dahlgren, Lee, Porter and Farragut acknowledged the value of these services, so that when the last gun was fired and war was over the survey could afford to challenge the voices of ignorance and detraction to raise a murmur. But its great chief was smitten, and though living knew not the greatness of his success. Lingering in mortal sickness for some years (during which the work was in the competent hands of his friend and assistant, Mr. J. E. Hilgard), he closed a perfect life on the 17th of February, 1867, mourned not only by his bereaved country, but by the enlightened world.

PEIRCE CARRIES ON THE WORK.

His long time associate and warmest friend, Benjamin Peirce, of Harvard University, succeeded him. This succession could scarcely be called a change as alike were their habits of thought and modes of action. Indeed, so thoroughly organized, equipped [illegible] that nothing but annihilation could have prevented its smooth and even progress even had no such wise and skilful hand as Peirce's guided the helm. Men like Hilgard, Patterson, Cutts and Whiting would scarcely allow the service to which they had dedicated their best years and to whose extension and success they were pledged, to sink below the level to which Bache had raised it; and accordingly we find them under Peirce formed into a scientific and professional "cabinet," in which all methods were dis-

school, plans of administration prepared and the general good thereby greatly benefited.

EXTENDING THE TRIANGULATION INLAND.

To Peirce belongs the credit of first extending the triangulation from the coast into the interior States. Realizing (as did Bache) the inadequacy of a mere strip of coast determinations to the wants of so great a land as the newly united States he proposed an extension of operations from the Atlantic to the Pacific Ocean and from the St. Lawrence and the lake region to the Gulf of Mexico. Points of triangulation were thus to be determined in every State, which points should serve in the near future as absolutely correct bases upon which the several governments should found careful surveys of their own domains—topographical maps which should equal, if not surpass the famous surveys of England, France and Spain. The magnitude of this enterprise is apparent when we consider the extent of our country. The States, exclusive of Alaska, cover an area containing 2,900,000 square miles, and to this Alaska adds nearly *six hundred thousand. Comparing this* with Great Britain, with her 89,000; with France, containing 211,000; with Spain, having only 188,000; even with the whole of Europe, which has but 3,800,000 square miles, and we at once perceive that this gigantic plan was well worthy of its great projector. Peirce also succumbed to the great destroyer—him who "with equal feet" treads the threshold of the great and the lowly. Not, however, did he close his tired eyes until he had seen the fruits of his labor, his great project well advanced, and systems of triangulation extending in every direction throughout our vast interior domain. Finding the cares of office (as he desired to administer them) growing too heavy for his advancing years, and sighing, naturally, for the scholarly retirement to which he had been so long accustomed (and which he left only in obedience to his dying friend), Professor Peirce, on the 17th day of February, 1874, exactly seven years after the death of Bache, *resigned the superintendency into the* hands which now administer its functions, and thankfully retired to "the classic shades" where his earlier days had been serenely passed.

TRIBUTES TO PEIRCE.

His death, a blow alike to his native country and to the world, is of so recent occurrence that it need but be mentioned to recall the universal outburst of sorrow and eulogy with which enlightened America through her press, her scholars, her poets and her statesmen mourned the loss of her gifted son. He was in all respects a remarkable man. As a mathematician he had no superior—indeed, it is doubtful if he had an equal. Of the great principles on which geodesy depends, and the many obscure, though eminently important mathematical operations which come to its assistance in delineating the earth's surface and determining its shape and density, he was a master among masters. To this add an exceptional administrative ability and an *aggressiveness in carrying* his conceptions to completion which few possess, and there stands confessed a truly worthy wearer of the mantle which had fallen to him. His remarkable personal magnetism, his venerable and intellectual appearance, his soft, melodious voice (low and clear like a lady's), all combined to give him an influence over men rarely possessed by man. One felt that here was a man who was master of his subject; whose words meant something; who talked because he wished to instruct, and so incite to intelligent action; who, in his administration of his great public trust, asked not charity, but demanded that the country should show itself worthy of its high place among nations by surpassing them in the grandeur and extent of its public works.

THE PRESENT SUPERINTENDENT.

He died on the 6th of October, 1880, in his seventy-second year. The day that saw Peirce's retirement witnessed the accession to the superintendency of Mr. Carlisle P. Patterson, previously Hydrographic Inspector. Inasmuch as this gentleman is still pursuing with characteristic energy his labor of love in extending and advancing the interests of the survey, the task, though grateful, of narrating the history of the work since his accession would doubtless be out of place. Suffice it to say that, although cramped *in his movements by want of money and* other difficulties nearly as great, he has pushed forward the survey on both coasts and in the interior with such vigor and skill that it stands to-day without a rival in extent, in accuracy and in economy.

THE WORK IN ITS PRESENT CONDITION.

A mere enumeration of the "new work" is all that can be given here. The triangulation is in full progress in twenty-five States. The Mississippi River has been surveyed as far up as Memphis, nearly nine hundred miles above its mouth. Important surveys and explorations have been made in far-off Alaska; soundings across Behring Strait have developed a remarkable ridge extending between Asia and America—a circumstance hitherto unknown. The new surveys of the James and the Delaware are nearly *completed* and the *entire Gulf of Mexico* sounded and mapped from the Mississippi to Yucatan and from the Bahamas to the coast of Mexico. To the present Superintendent belongs also the "Coast Pilot," a directory of the Atlantic and Gulf coasts, long urgently needed by seamen. Although Bache had some idea of a publication of this kind it never took shape in his mind, and he left behind him only a few vague and disconnected notes of little practical value. Patterson conceived and put into execution the unique and elaborate plan which is now being carried out, and which will when completed form the most complete series of coast directories ever published by any nation. This plan proposes the publication of (1) a very complete description of coasts, bays and rivers as far as the head of navigation—a carefully prepared itinerary, in fact—giving in plain language detailed information on every possible question of interest to mariners—this to be issued in a series of five large volumes illustrated with valuable views and charts; (2) a more condensed series in three volumes, embracing the same extent of coast but with less detail; (3) a single "handy volume," containing sailing directions for the whole coast from Maine to Texas. A work of a similar character is likewise to be prepared for the Pacific coast. Meanwhile the topographical and hydrographic work is being rapidly executed—the latter being now almost entirely performed by officers of the navy, who, since the close of the war, have become once more available for maritime surveying. In short, but few years can elapse ere the whole of the Atlantic coast and that of the Gulf of Mexico will show an unbroken border of surveyed topography and hydrography extending from Passamaquoddy Bay to the Rio Grande.

SLIM APPROPRIATIONS.

The difficulty in the way is principally want of money and the consequent vexatious restrictions upon the proper prosecution of the work, and this has of late years become a matter of very serious consideration. Those who understand the magnitude of our survey and its value to commerce and yet have not looked into details concerning it will be surprised to learn that the amount allowed *annually for its prosecution is but little over* $500,000! Out of this small sum the salaries of the officers must be paid, a fleet of nine steamers and twelve schooners supported, camp equipages and outfits purchased, transported and repaired, costly astronomical, trigonometrical and topographical instruments purchased, results completed and published (including the engraving of the surveys upon copper plates), and the central office at Washington maintained, that hive whence these skilful bees go forth to procure and bring back honey. For all these purposes a little over $500,000, while the lighthouse establishment expends nearly $2,500,000, the revenue marine service nearly $1,000,000, the signal service $450,000, and even the lately established geological survey $200,000! It is not that these useful public works receive too much, but that the coast and geodetic survey receives too little. All of the above mentioned services are largely dependent upon it, especially the lighthouse establishment, which *could not proceed* successfully without its surveys; and it seems to the writer, as to many other citizens, high time that the mercantile and scientific interests of the community should unite to strengthen the hands of the Superintendent by urging upon Congress the exercise toward the survey of a greater liberality than has been of late years displayed. The beneficent results of a such course would very shortly become apparent to the most careless observer.

NEW YORK HERALD, WEDNESDAY, AUGUST 3

THE COAST SURVEY.—Few of our citizens know anything of the working of that extraordinarily useful branch of our public service, the Coast Survey. A paper published some days back in the HERALD gave an outline of its history and the spread of its work. To-day we publish an account of the methods by which that work is carried on and the results achieved. Those who have seen by chance a survey map in the rough, with its multitude of lines and myriads of markings, have doubtless given little thought to the arduous field work necessary before that stage was reached, and have simply wondered how the perfect map has emerged from that mathematical spider's web. All this, however, may be traced step by step with interest and profit in the article on another page. (Editorial.)

THE COAST SURVEY.

Charting Our Coasts and Sounding Our Waters.

HOW THE WORK IS DONE

The Delicate Process of Triangulation Described Step by Step.

TOPOGRAPHY AND HYDROGRAPHY

From the First Reconnoissance to the Chart in the Mariner's Hand.

CONDITION OF THE GREAT TASK.

Having sketched the history of the United States Coast Survey in a previous paper it will now be interesting to explain its methods and results. Into the prosecution of so extensive a geodetic work as our coast survey many branches of theoretical and applied science necessarily enter. Taken in order, the operations which result in placing an accurate chart or map in the hands of the sailor or the civil engineer are as follows:—Reconnoissance, measurement of base lines, determination of selected trigonometrical points, determination of latitude, longitude and azimuth, mapping the coast or country topographically, hydrographic surveys, reduction of field work and field maps for engraving, engraving the plates, electrotyping, and, finally, printing the plates.

RECONNOISSANCE.

Reconnoissance, the first operation, requires special aptitude and great experience, and phrenology here comes in play, for the officer intrusted with this important work must have, to be successful, the bump of locality well developed to enable him to recognize selected eminences from different points of view. The operation of reconnoissance consists in travelling over the country to be surveyed and selecting the proper points to be trigonometrically determined. The object that must be specially borne in mind is to obtain as long lines of view as possible, so as to avoid the errors arising from the construction of a great number of small triangles; but many other elements of importance enter into this work, such as the character of the country to be surveyed, the necessity for intermediate or secondary points and the scale on which the succeeding topography is to be mapped. A discussion of these elements would be out of place in this paper. A site for a base line is also selected in some convenient position for extending the triangulation, and must be on ground as nearly level as possible.

BASE MEASUREMENT.

Next comes the base measurement. Here the most delicate instruments are required; and the study of the expansion and contraction of metals under changes of temperature has led to the adoption of the present "compensated" apparatus, which consists of two double bars, each six metres long, supported on adjustable trestles, and capable on favorable ground of being moved over one measured mile in a day. Each bar is composed of two, one above the other—the upper bar being of iron and the lower of brass—firmly connected at one end and free at the other. The free ends are connected by a lever so related to the different expansions of the two metals as to preserve one point at an invariable distance from the fixed end. The relative thickness of the two bars is such that their acquired temperatures will be equal during changes. At the fixed ends the level contact is so adapted as to admit of the use of the bars on inclined grades. The manner of measuring a base for the more important or primary triangulation is as follows:—The site having been chosen, the ground levelled and graded, tripods are built at each end of the base, as signals to observe from and upon. A centre mark is placed under each signal which must mark not only the exact terminus of the base, but must correspond with the exact centre line of the pole on top of the tripod, the pole being used to observe upon from other signals. The bars are then placed in position on the centre mark at one end of the base (generally a fine dot on the head of a copper nail in a stick driven into the ground until its head just protrudes). The coincidence of the end of the bar with a perpendicular line from the centre mark is determined and verified by an observer with a transit placed at right angles to the line and at a moderate distance from it. The two bars having been placed are aligned with the opposite end of the base, are levelled, brought into contact, and thus a measurement of twelve metres is made. Then the hindmost bar is lifted, swung out and carried forward to the front, where it is again aligned and brought in contact with the other bar, thus measuring eighteen metres. So the work goes on. The work of each day is remeasured on the succeeding day in order to eliminate possible errors, the point of termination of daily measurements

being marked by a fine dot on a copper nail, as above. Every operation, from the levelling of the ground to the final conclusion of the measurement, is performed with the utmost nicety and deliberation, and with such exactness that a base line of eight miles may be measured with a probable error of only a fraction of an inch. The usual length of base for primary triangulation is from four to eight miles; and when tested by a careful triangulation, beginning hundreds of miles off and traversing a great extent of country, the measured distance rarely differs from that computed through the triangles more than two or three inches.

TRIANGULATION—THE "HELIOTROPE."

The base being measured the triangulation begins. Signals are erected on the prominent points selected during the reconnoissance, and observations of the horizontal angles commenced with the theodolite. These observations consist of the measurement of the angles of the triangle formed by the lines joining the two ends of the base with a third point, and those formed by these points with other points in the triangulation visible from each other. Some of these lines are of great length, those in the celebrated "Davidson Quadrilateral" in California reaching a length of over one hundred and forty miles. Each observation is many times repeated on different parts of the graduated circle of the theodolite, so as to eliminate errors of graduation. The theodolite, in practice, is accurately levelled over the centre of each station, and when once in position remains until all the required angles have been measured. It is then transported to the next in order and the same process repeated. In long lines a "heliotrope" is used to enable the observer at the theodolite to direct the instrument accurately to the distant signals. The heliotrope is a telescope with ordinary cross hairs (to define the position of the optical axis), having two metal "sights" mounted along its length—one near the object glass and the other near the eyepiece—each having a round hole cut through near its top. Just behind the rear sight and closer to the eyepiece a small circular mirror is mounted, which turns every way and serves to reflect the figure of the sun through the holes in the sights. The telescope is furnished with levelling screws, so that it may be adjusted in the plane of the horizon, and, when so adjusted, it is directed toward the signal where the observer with the theodolite is stationed. The observing tent or house being brought into the intersection of the cross hairs, the mirror is turned until a ring of sunlight of equal width in all its parts is formed around the hole in the front sight, when the instrument is said to be "showing." The theodolite observer from his position sees a bright point which represents the exact centre of the station on which he is observing, and, as he turns his instrument to the different triangulation points within his limits of visibility, he sees similar points of light (as there is a heliotrope at each station) and is thus enabled to measure the horizontal angles subtended at his station. As each station occupied is completed, heliotropes are shifted, and so the work goes on. In minor systems of triangulation (called "secondary" and "tertiary") where the signal poles of observed stations are distinctly visible through the telescope of the theodolite, heliotropes are not used. When all of the angles of each triangle have been measured the lengths of the sides of each are computed by a simple rule of trigonometry familiar to every school boy. But, besides this plain computation, more intricate operations are in many cases required to fulfil the conditions of accuracy insisted upon by the Coast and Geodetic Survey. The spherical figure of the earth introduces, in large triangles, a new element known as "spherical excess." In other words, the large triangles instead of being "plane" are "spherical" and require for their correct determination the aid of the rules of spherical trigonometry.

DETERMINING THE LATITUDE.

Triangulation, thus performed, can be laid down upon paper with absolute relative accuracy; but in order to know its exact position on the earth's surface—that is, its latitude and longitude—we must know the geographical positions of its base line and other selected points in the system, and, besides this, its "azimuth"—that is, the direction of several of its lines with reference to the true meridian. For these determinations we have to call astronomy to our aid, and by its means determine the actual positions on the earth's surface of the selected stations. And,

First—The latitude. The latitude of a point on the earth's surface is its position, in degrees, minutes and seconds of arc, north or south of the Equator. Astronomy furnishes us with an easy method of determining this position by observing the zenithal distances of stars in pairs which culminate near the zenith, and as nearly as possible at equal distances north and south from it. By "a pair" is meant two stars which not only cross the meridian at nearly equal zenith distances, but within a very short time of each other—that is, not less than one minute nor more than twenty minutes of time apart. For these observations, which, when combined with the declination of the stars give the latitude, an instrument called "the zenith telescope" is used, invented and applied by Captain Andrew Talcott, formerly of the Coast Survey. As "time" is an important element in this work it is obtained by observations of the transit of certain fixed stars across the meridian of the station, by which means the error of the sidereal clock or chronometer used by the observer is determined and the true times of transit of the zenithal stars become known. This latter operation is performed by means of "the transit instrument." Professor George Davidson has, however, devised a combined transit instrument and zenith telescope which has had great success and is now very generally used. The ordinary zenith telescope is about 45 inches long, with an aperture of about 3½ inches, and is supported by a brass column 2 feet high. The horizontal axis on which the telescope revolves has a striding level and is hollow, so that light from a conveniently placed lamp may illuminate the field of the telescope. A horizontal circle one foot in diameter and graduated to half minutes of arc serves to place and keep the instrument in the plane of the meridian. A levelling apparatus supports the whole. The "transit" is a telescope from twenty-six to fifty-six inches long, having vertical and horizontal spider lines stretched across the diaphragm (in the focus of the eyepiece), and is supported by two pieces of brass or iron. It is intended to move only in the plane of the meridian, and, when set up, is accurately placed north and south by observations of the transit of some well known and slow moving star. When thus in position the true time at the station is found by observing the chronometer time of the transit of numerous stars across the threads of the telescope, and then applying the corrections for instrumental errors and for the error of the clock. Instrumental errors are three:—The instrument is not exactly in the meridian—"the azimuth error;" its optical axis does not correspond with the central spider line of the diaphragm—"the collimation error," and its horizontal axis is not exactly level—the bias, or level error. The first is determined by observations of stars differing considerably in declination but little in right ascension, or from observations of two stars near the Pole, one crossing the meridian above and one below the Aole, and about twelve hours apart. The second error is found by readings of the striding level for each star. The third error, or collimation error, is determined by observing the transits of a star near the Pole over one-half of the threads, and then reversing the instrument and observing the transits over the same threads. The correct time being known and the differences of zenith distances the latitude becomes known by adding to the half sum of the declinations of a pair of stars to the half difference of their zenith distances at the time of culmination. The results are corrected for instrumental errors, for level and for refraction, and thus the true latitude is obtained. Many pairs of stars are observed, and the mean of the resulting latitudes gives the correct latitude of the place.

LONGITUDE.

Second—The longitude. The clock or chronometer having been set to the time of the central meridian from which longitudes are counted or reckoned (generally that of Greenwich) and its error accurately determined by the difference between the observed and computed times of transits of a number of stars, the longitude becomes known by the simple process of multiplying the difference between the time at the station and the chronometer time by fifteen, by which means the longitude in time is reduced to longitude in degrees, minutes and seconds.

THE AZIMUTH.

Third—The azimuth. The angle between the plane of the meridian and the vertical plane passing through any given signal or station of the system is obtained by careful measurements with an astronomical theodolite of the angle between the pole star or some close circumpolar and a mark set up consisting of a small, perforated box, through the front face of which the light of a lamp or lantern is shown, made to appear about as bright as the star observed upon. The horizontal angle between this mark and any given station is observed in the daytime. Knowing the azimuth of the mark the azimuth of any signal becomes known; and thus having latitude, longitude and azimuth the triangulation may be said to be completed.

MAKING THE MAP—THE PLANE TABLE.

The map is now to be made. On a sheet of carefully selected drawing paper of convenient size are laid down first the lines of latitude and the meridians covering the area to be surveyed, and then the positions of all the geodetic points within that area, which have been determined by the triangulation. In mountainous or undulating country this sheet is generally made on a scale of about six inches to a mile, while in level, flat lands the scale is usually about three inches. When prepared and ready for use it is fastened upon the "plane table," which is the topographer's instrument as the theodolite is the triangulator's. This instrument consists of a very carefully made drawing board of well seasoned wood, which is screwed upon a tripod, with levelling apparatus attached, and is movable horizontally around its central axis in any direction. Having been transported to the station at which the topography is to begin, and the sheet of paper prepared as above having been fastened to it by means of clamps, the table is first accurately levelled by means of the spirit level on the "alhidade" and the levelling screws. The alhidade is a telescope supported on a brass column, which in turn rests upon a metal ruler, one edge of which is identical with the optical axis of the instrument. The ruler carries a spirit level so that the table, when the alhidade is placed upon it, may be made level by means of the levelling screws. For determination of heights and differences of surface level the telescope has a slight vertical motion over a graduated sector furnished with a vernier. Transported to some convenient station marked upon the sheet, the table, after careful adjustment over the centre of the point, is levelled and the ruling edge of the alhidade adjusted to the line (on the sheet) of the station occupied and one of the points in sight. Table, alhidade and all are now moved around the axis, until, in looking through the telescope the signal to which the instrument points on the sheet is seen in the centre of the cross hairs. The table is then clamped, so that it has no horizontal movement, and the telescope is directed (on the sheet) to another signal. If the instrument has been accurately levelled and is in good adjustment the new signal will be seen on looking through the telescope as soon as the edge of the ruler has been adjusted (on the sheet) to the line of its direction. A third and a fourth signal are likewise observed, and when all lines, as seen through the telescope, pass through the central dot in the arbitrary mark on the sheet representing the station occupied the table is "in position" and ready for work. A small pole with a flag is now sent forward to some convenient point near at hand, and, the telescope being directed to this, a line is drawn upon the paper which shall represent the direction of the point. The table is now removed to the site of the pole or flag, levelled, adjusted and (the ruling edge of the ruler having been placed on the exact line drawn between the station and the new position) turned until the signal station just left is seen through the telescope exactly in the intersection of the hair lines. The table is clamped, the eye being kept at the telescope, the ruler is slid across the direction of the drawn line until another signal is seen. A line to this being then drawn along the ruler the intersection of the two should be the position of the point now occupied. In practice, however, this is not the case, for on trying a third point it will be found that this third direction line will form, with the intersection of the others, a small triangle. A point within this small triangle is then assumed as the true intersection, and the former process repeated until all the lines observed converge in one point, which will be the true position of the station. The outline of the shore or coast between this and the initial point are sketched in by the eye, aided by such direction lines with the ruler as the surveyor shall deem necessary. "Cuts" are taken to other points at convenient distances, and the details of the topography are mapped as they are met with. At each new station the process of adjustment and mapping is repeated until a complete map of the area embraced within the limits of the sheet is obtained.

THE TELEMETER.

Distances were formerly measured by the surveyor's chain, but of late years the "telemeter" has nearly superseded the old method. This instrument is a simple wooden rod graduated into a scale of equal parts, so that the number of divisions upon it "as seen between the upper and lower horizontal wires of the telescope of the alhidade is equal to the number of units in the distance between the observer's eye and the rod held at right angles to the line of sight." Each telemeter is graduated by experiment for each particular instrument and for the eye of the observer who uses it; and, when so graduated, is reliable for distances not exceeding 650 yards. This machine has thus far answered admirably in the surveys of our coasts and interior. Heights are determined by the use of the vertical sector on the alhidade, and the undulations of the surface are mapped with great care at equal vertical intervals—generally of twenty feet.

THE WATER SURVEY.

Here is now a map of the shore, but as yet we have seen nothing like a chart which shall give the mariner the surroundings, rock, shoals and quicksands of the water, as the topographical map has given the landsman the houses, roads, farms, forests and streams of the land. And now we come to the *science of hydrography* or a survey of the water. To prepare a hydrographic sheet for work a projection of the lines of latitude and longitude has to be made identical with those made for the topographer. Points of triangulation are plotted, as for him; but, besides these, the shore line from his topographical map of the region is accurately transferred to the hydrographic sheet, so that the hydrographer may be able to lay out his work and plot his lines when run. In hydrography the first process is the selection of a site for "a tide gauge" and the erection of the gauge. The simplest form (which is commonly used in harbor surveying) is a graduated staff divided into feet and tenths; but there are now elaborate forms depending for the necessity of their use upon local circumstances or the accuracy of results required. Observations of the high and low waters of every day are begun at once (as soon as the staff is up), so as to obtain as many as possible during the time occupied by the survey, and hence an accurate mean. Next in order comes "signal building," for the measurement of horizontal angles in hydrography is done generally with the unaided eye, and signals must be large, of a striking or easily recognized form and whitewashed, so as to catch the eye quickly. Sometimes flags of different colors are used, according to the background against which they show, but these details are to be determined by the judgment and experience of the hydrographer. With the tide observations well under way and the necessary signals prepared, the boats and the vessel are made ready. Leadlines are carefully marked and examined (generally they are marked in feet and fathoms), sextants or theodolites adjusted and the hydrographer starts his boats fully equipped for sounding.

A HYDROGRAPHIC CREW AT WORK.

A full crew is composed of six oarsmen, two leadsmen, one coxswain (to steer), two officers as observers and one as recorder. In practice, when all are experienced, a much smaller force of officers has been successfully employed. Starting from some point, whose position is determined by the horizontal angles between three fixed points, the boat is turned upon her course, and a line of soundings is taken across the bay or harbor to the opposite side. Soundings are taken as rapidly as possible, the boat or vessel keeping a uniform rate of speed; the recorder notes each one, and also the time, at regular intervals of one minute, unless the bottom is very uneven or the depths great, when time is noted at every sounding. At intervals during the progress of the line angles are measured between three known points on shore and duly recorded, and thus the boat's position is known throughout the whole length of each line. Or

reaching the opposite shore (or the end of the line, if it be run off shore) angles are again carefully taken, and the boat put upon a new line. Lines are usually run parallel to each other, at right angles to the shore; and are crossed by others at right angles to the first set; but all ledges and shoals are separately developed—*the lines being run* in every direction and as closely as they can be plotted until the whole shoal area has been fully covered. While the boats are thus engaged the rise and fall of the tides are noted at the gauges every five minutes, but when there is no boat sounding only high and low waters are taken. The lines run are plotted on the working sheet by the same means through which the angles were taken in the boat—that is, the two sextant angles at each position are laid off right and left from a fixed central arm of a three-armed protracting circle, and the protractor is then moved about on the paper until the three arms are brought on with the positions of the proper signals marked on the sheet. The centre point of the instrument is then the position *of the* boat when *the angles were taken.* All positions having been plotted lines in pencil are drawn between them on each sounding line: and in the course of time the sheet is crossed and recrossed by a network of lines, on which the soundings are to be plotted.

LOW WATER SOUNDINGS.

A mean of low waters having been obtained by observations of every low water during one lunar month at least, the soundings as recorded are reduced to this mean, and the draughtsman is then ready to put on the sheet the reduced soundings, or so many of them as he shall select, with a view of presenting a perfect figure of the bottom and the shape and extent of the shoals. Over a level bottom soundings are selected between *the angles at equal intervals of* space, without regard to time. Where the bottom is broken time alone is taken into account. It is obvious that a leadsman will take fewer soundings in deep water than in shallows, and that the boat, preserving a uniform rate of speed, will pass over more ground in the time between two deep soundings than between two of less depth. In soundings of ten fathoms and over (especially in a strong current) angles should, if possible, be taken at every sounding. When the soundings have been plotted the curves of six, twelve and eighteen feet are drawn upon the sheet in colors, so as to represent the slopes and irregularities of the bottom as the contour lines of the topographer show the undulations of the land. The chart is *now ready for the central office* at Washington, where field work is carefully verified and the survey reduced to the scale of publication. In practice, few officers plot the soundings on the original sheets, leaving that work to the skilled draughtsmen in the central office—but it is a good plan to put upon the lines in pencil as much of the work as possible, so as to check it, to discover errors, and get an intelligent comprehension of the figure of the bottom as he goes along.

REDUCING THE MAPS FOR PRINTING.

The survey is now complete—triangulation, astronomy, topography and hydrography—and it now remains to prepare these for publication, so as to form a complete and harmonious whole, which, when published, *forms the finished chart so invaluable to* mariners. The original sheets are sent to the central office and there pass through different processes. If a preliminary edition of a certain coast or harbor is desired the original surveys are combined in one careful and elaborate drawing (generally on tracing vellum), which forms a complete chart, and is transferred to stone in a reduced form by the photo-lithographic process. An edition, according to the needs of the public, is printed from the stone, and so rapid is the process that a complete and accurate chart for mariners can be put upon the market a few weeks after the reception of the original survey at the central office. The objection to this method of publication is that it is not lasting. As soon as the required *edition has been* published the stone is cleaned, and, should a new lot be wanted, the photo-lithographic work must be done over again. Besides these imprints, though quite accurate, have not the finish upon which a great nation would wish to rest its reputation for superior cartography.

THE PERMANENT CHARTS.

The permanent charts are, therefore, prepared in a different fashion. Although formerly the original topographical sheets were reduced to the publication scale by laborious hand reduction, photography now steps in and produces in a few moments reduced copies of the original surveys on any scale desired. The photographic reductions, being combined or joined together on a sheet of the required size for the chart to be engraved, are sent, after some manipulation in the draughting rooms, to the engraver. Upon a plate of rolled copper, which has been previously coated with a thin film of wax, *the engraver transfers the lines of the drawing* by a delicate tracing on fish glue. He then marks the lines in on the plate with "a point," finally cutting them with "a graver," comparing with the original as he proceeds, and subjecting it from time to time to the test of a "proof" through the printing press. The topographical engraving having been completed the hydrographic work must be engraved. For this the engraver receives a separate drawing, which, with the exception of the shore line, is reduced by hand. The necessity of hand reduction of hydrography becomes obvious when we consider that whereas topographical features are easily reduced by photography, and will present when so reduced clear and distinct outlines, on the other hand so many soundings are plotted on the hydrographic sheets that if reduced by photography to a small scale they would present a confused and indistinguishable mass, besides requiring the engraving of more figures than would be necessary. Therefore a skilled draughtsman marks upon a sheet of drawing paper (upon which the shore line has been previously traced, such soundings selected from the original sheet as will give a correct figure of the bottom. He also marks all shoals and ledges, names of points, streams—in short, what is called the "general lettering" of the chart. This goes to the engraver, who cuts from a correct tracing these soundings and lettering on the same plate which already has the topographical features. Then follow the finishing touches—the title, compasses, notes of information, border, &c.; and the plate having been carefully verified as to every sounding, line and letter is finally declared completed.

ELECTROTYPES.

But if we suppose that the thousands of copies of charts that are annually published are printed from these engraved plates we are greatly mistaken. It takes months upon months and costs thousands of dollars to engrave the plate of an ordinary coast chart; and the wear of the press would soon obliterate the delicate lines of engraving. We therefore call to our aid the art of "electrotyping." The original engraved plate sent to the electrotyper is immersed in its electric bath; a deposit of copper is made upon its engraved surface until its thickness reaches a thickness equal to that of the plate. It (the double plate) is then taken out of the battery bath; the two are separated, and behold! we have an exact copy in relief of everything, down to the minutest lines, on the engraved plate. This relief copy is called the "alto." The original, having been cleaned, is covered with paraffine and tracing paper to protect it from the air and filed away carefully in a fireproof room, while the alto returns to the battery, where it, in turn, receives a deposit of copper forming another plate of the desired thickness; only that this last, when separated from the "alto," is, in all respects, a twin of the original plate—having everything ready for printing. This plate is therefore called the "basso," and by some the "printing plate," and it is from it that all of the published charts are printed. When the first basso shows signs of wearing the alto, which meanwhile has been snugly reposing in its safe, is again brought into requisition and a new basso is made. Then an infinite number of copies of the original engraving can be made without the slightest danger of wearing away the engraved lines. Of late years a device has been introduced whereby the delay in printing small plates caused by the time occupied in electrotyping has been almost done away with. This device consists in simply coating the surface of the original copper plate with a thin film of steel. The process occupies scarcely any time, costs little and protects the original engraving absolutely from wear. The copper plate on which was engraved the form for the bonds of the Centennial Exposition at Philadelphia had 15,000 *impressions taken from it after being thus* steel faced without showing the slightest signs of wear. When the steel-faced plates are not required for printing the coating is [illegible] they are, like the other copper plates, covered with paraffine and paper and stowed away. This because the steel surface, when exposed, has been found to rust from the slightest dampness. This process is not, however, proper to be applied to the large chart plates, as it implies the existence of but one plate of each, and the risk, in case of fire or other accident, would be too great to incur.

PAPER AND PRINTING.

The basso having been carefully examined and a proof taken from it to see that its surface is free from blemish, is sent to the copperplate printers, of whom there are several employed. Here we call in the aid of the paper maker. For it is as necessary to have paper that will wear and not tear, as it is to have accurate surveying and drawing and beautiful engraving on the plates. It would scarcely be believed the amount of study that has been given to this subject and the number of experiments that have been made by the experts in the central office; but the results have justified the expenditure of time and labor. We doubt if any such charts as those of our own Coast Survey are published by any other nation. For accuracy, clearness, elegance of finish, beauty of engraving and durability of texture in the published proofs they stand unrivalled and have challenged and commanded the admiration of geodesists and mariners throughout the world.

SALE OF THE CHARTS.

The printed charts are distributed for sale to authorized agents, and are sold at a nearly nominal price. *It is not the object of the government to* make a profit on the charts, and the price fixed is, therefore, barely sufficient to pay the cost of printing. The volumes of the "Coast Pilot" are also sold at a low figure, and it is thought that even these low prices will be reduced when the condensed volume embracing the whole coasts shall have been published.

Thus the reader has been taken through all of the operations of this great survey from the primary reconnoissance to the deposition on the shelves of the dealer of the printed charts. Any attempt at explanation of the many purely scientific operations of the survey has been avoided, which, however valuable to the world of investigation, have no immediate bearing upon the principal objects for which the work was designed and organized—viz., the delineation of our shores, the survey of our coasts and harbors and the elaborate mapping of our great domain. Such abstruse investigations as those of the figure of the earth and the acceleration of gravity, by Charles Peirce; of the occult forces affecting the tides, by Benjamin Peirce and William Fenel; of magnetic forces and systems, by Hilgard and Schott; while of the greatest importance to science and most creditable to our country, as placing her in the foremost rank of enlightened research, would be manifestly out of place in a popular discussion.

THE FORCE EMPLOYED—CONDITION OF THE WORK.

At the present writing the Coast Survey employs 172 persons, of whom forty-six are assistants, nine sub-assistants and twelve aids, the balance being made up of clerks, engravers, draughtsmen and artisans. As nearly as can be ascertained the condition of the work at the commencement of the present year was as follows:—The coast triangulation is complete on the Atlantic and nearly so on the Gulf coast. On the Pacific it covers two-thirds of the coast. Both systems have been connected with the interior triangulation (already in operation in twenty-five States), and the latter will soon extend over the whole country. The topography is complete on the Atlantic coast, except a portion of the seacoast of Maine and a small part of Florida. On the Gulf coast part of Florida and some of Louisiana and Texas remains to be done; and of the Pacific coast about one-third is unfinished. The hydrography keeps pace with the topography; and there are, therefore, but few harbors of which handsome and accurate charts cannot be furnished on demand. In a word, the time is close at hand when the Coast Survey will be able proudly to point to a continuous series of admirable charts of both land and sea from Maine to Mexico and from Lower California to Vancouver's Island. By cable, our longitudes are connected with the central meridian at Greenwich; by telegraph, chains of accurate determinations of longitudes bind the Atlantic to the Pacific and extend up and down the coasts of both great oceans; and with such results as these, and with the glorious prospect of uniting in the near future both oceans and all of the States in a network of triangles which shall form a firm foundation for local topographical delineations, the Coast and Geodetic Survey may well be proud of its labors and may justly claim from the country whose resources it is developing and whose name it has ennobled over the civilized globe, just recognition and liberal support.

U. S. COAST AND GEODETIC SURVEY.

by F. M. Thorn Supt.

HISTORICAL COMPILATION.

A systematic survey of the coast was first inaugurated by the act of Congress February 10, 1807, which read as follows:

AN ACT to provide for surveying the coast of the United States.

Be it enacted, &c., That the President of the United States shall be, and he is hereby authorized and requested to cause a survey to be taken of the coasts of the United States, in which shall be designated the islands and shoals, with the roads or places of anchorage, within twenty leagues of any part of the shores of the United States; and also the respective courses and distances between the principal capes, or headlands, together with such other matters as he may deem proper for completing an accurate chart of every part of the coasts within the extent aforesaid.

The work was assigned to the direction of the Treasury Department where it continued until 1817, when the act of April 14, 1818, repealed so much of the foregoing statute as authorized the employment of others than persons belonging to the Army and Navy. The work, which, owing to interruptions consequent upon European complications, our war with England, &c., had only just fairly begun, by the commencement of field operations in 1815, was discontinued as a separate organization, and was fitfully and disconnectedly prosecuted under the Navy Department until 1832.

In 1828, in reply to the Committee on Naval Affairs of the House of Representatives, the Hon. Samuel L. Southard, Secretary of the Navy, in whom the control of the Coast Survey was then lodged, declared that the maps and charts produced under the operation of the act of 1818:

"Do not furnish a satisfactory survey of the coast for the following reasons: 1. They exhibit detached parts unconnected with each other. 2. Are generally confined to the shores, and do not extend sufficiently far into the ocean. 3. Were many of them made by incompetent men, with incompetent means. 4. They were governed by no fixed and certain principles or guides in ascertaining the latitude and longitude of the principal points and positions. 5. They do not embrace the whole coast. For these *and other reasons they are unsafe*, and in many instances *useless* and *pernicious*."

Secretary Southard further recommended a revival of the Act of 1807, and a return to the comprehensive and adequate scientific methods and plan approved at the outset by President Jefferson and Secretary Gallatin. In his annual report for 1828, Secretary Southard again declared that the surveys executed under the Navy Department—

"Do not afford materials for an accurate chart of the harbors and the approaches to them, and assist but little toward a perfect knowledge of our coast, which can only be acquired by that scientific survey of the whole, the importance of which I have ventured to urge and would again respectfully suggest." And he added that "these surveys with others, which from time to time have been made under the direction of the department have, to a certain extent, been useful, but they have also been very expensive in proportion to their usefulness."

After a full consideration of the unsatisfactory results of the Naval supervision, as repeatedly suggested by the Secretary of the Navy and others, Congress revived the law of 1807, with somewhat extended scope, by the Act of July 10, 1832, as follows:

AN ACT *to carry into effect the act to provide for a survey of the* coast of the United States.

SECTION 1. *Be it enacted, &c.*, That for carrying into effect the act entitled "An act to provide for surveying the coasts of the United States," approved on the 10th day of February, 1807, there shall be, and hereby is, appropriated a sum not exceeding twenty thousand dollars. to be paid out of any money in the Treasury not otherwise appropriated; and the said act is hereby revived, and shall be deemed to provide for the survey of the coasts of Florida, in the same manner as if the same had been named therein.

SEC. 2. That the President of the United States be, and he is hereby, authorized, in and about the execution of the said act, to use all maps, charts, books, instruments and apparatus which now, or hereafter may, belong to the United States, and employ all persons in the land or naval service of the United States, and such astronomers and other persons as he shall deem proper.

The work was again placed under the Treasury Department, and Hassler, its original Superintendent and the friend of Jefferson and Gallatin, was again placed in charge.

Operations under the Treasury Department had hardly been fairly resumed before President Jackson, in pursuance of the recommendation of Mr. Taney, Secretary of the Treasury, directed the Survey to be again transferred to the control of the Navy Department. The transfer was ordered March 11th, 1834, Mr. Woodbury being Secretary of the Navy. Again the work proceeded so unsatisfactorily that within two years —in March, 1836—it was re-transferred by President Jackson to the Treasury Department, of which Mr. Woodbury had in

the meantime become the Secretary. The re-transfer of the Survey to the Treasury Department by President Jackson, who had but recently directed its transfer to the Navy Department, and its re-transfer to Secretary of the Treasury Woodbury so soon after its transfer to Secretary of the Navy Woodbury, was specially significant as being the result of an actual, experimental test, by the same eminent officials of the comparative merit of the two systems of operating the Survey.

By the act of March 10, 1843, prompted by suggestions of the expediency of a re-transfer of the Survey to the Navy Department, Congress provided for an intelligent and efficient inquiry for the development of a permanent plan of organization of the Survey, as follows:

AN ACT making appropriations for year ending June 30, 1844.

For survey of the coast of the United States, including compensation of Superintendent and assistants, one hundred thousand dollars: *Provided*, That this and all other appropriations hereafter to be made for this work, shall, until otherwise provided by law, be expended in accordance with a plan of reorganizing the mode of executing the survey, to be submitted to the President of the United States by a board of officers, which shall be organized by him, to consist of the present Superintendent, his two principal assistants, and the two naval officers now in charge of the hydrographical parties, and four from among the principal officers of the corps of topographical engineers; none of whom shall receive any additional compensation whatever for this service, and who shall sit as soon as organized. And the President of the United States shall adopt and carry into effect the plan of said board, as agreed upon by a majority of its members. And the plan of said board shall cause to be employed as many officers of the army and navy of the United States as will be compatible with the successful prosecution of the work; the officers of the navy to be employed on the hydrographical parts, and the officers of the army on the topographical parts of the work; and no officer of the army or navy shall hereafter receive any extra pay out of this or any future appropriations for surveys.

The board selected by the President consisted of *three* civilians, *two* naval officers experienced in hydrography, and *four* topographical engineers of the army. Those officers, practically experienced in the work of the Survey, united in a plan not only fulfilling the requirements of the law as to the composition of the organization, but providing with sufficient detail for—

"The mode of executing the Survey" * * * "in accordance with the most approved means which modern science affords," "using always the most approved instruments and principles" * * * "the topography to be carried as far inland as may be necessary for a proper delineation of the shore and for purposes either of commerce or of defense," and with soundings "as far inland as the ports and harbors for commerce."

Although the board consisted of *six commissioned officers* of the Army and Navy and only *three civilians*, there was no dissent from the elaborate plan of a work of the highest scientific and accurate—and therefore practical and trustworthy—character, as outlined in "The Plan for the reorganization of the Coast Survey," adopted by them on the 30th of March, 1843; nor did the military and naval members of the board hesitate to unite in a resolution, submitted to the President, expressive of an opinion derived from their experience in and and acquaintance with the work, to the following effect:

Resolved, That inasmuch as the object and purpose of the survey of the coast refer principally to the commercial interests of the country, and as all the laws of Congress in relation to the same contemplate the employment of civilians and officers of the Army and Navy upon said work, it is the opinion of this board, and they do hereby respectfully recommend, that it should be under the control, and considered a part of, the Treasury Department.

In compliance with that recommendation the President, in his formal approval, April 29th, 1843, of the plan submitted by the board, declared that "the charge of the survey of the coast is continued in the Treasury Department, and is to be under its control."

An attempt, in 1848, to secure the transfer of the Survey to the Navy Department, was defeated in the House of Representatives by a vote of 90 to 36. In 1849 a similar effort in the Senate led to a debate, in which the scope and plan of the Survey and its methods were so ably presented by Senators Pearce, of Maryland, and Davis, of Miss., that the project received but two votes. (See Cong. Globe and Appendix, Vol. 20, 2d Session 30th Congress, pp. 553 Globe and 196 Appendix.)

The attempt in 1849 to re-transfer the Coast Survey to the Navy, evoked not only from scientific bodies like the American Academy of Arts and Sciences, the American Philosophical Society of Philadelphia, the Franklin Institute of Pennsylvania, and from Colleges and Universities, but also from the officers of nearly every Marine Insurance Company, Chamber of Commerce and Board of Trade, the most earnest protests against a remission of the Survey to the control of the Army or Navy or the abandonment of the existing wise, effective and practical plan of organization, whose results in the production of charts, accurate in latitude and longitude and replete with every form of safeguard to navigators, had so rapidly reduced the risks of navigation, disarmed of its terrors the mysterious sea and given safety to commerce along many a fatal reach and reef where pilots had been useless. (Appendix to speech of Senator Davis, Miss., Feb'y 19, 1849.)

On Dec. 31, 1850, a resolution of the Senate called upon the Secretary of the Navy to report what advantages would be derived by a transfer of the Coast Survey to the Navy Department, and upon the Secretary of the Treasury to state why, in his opinion, such transfer should not be made. Their replies are printed as Senate Ex. Doc. Nos. 35 and 36, 31st Congress, 2d Session. (15 Feb., 1851.)

The reply of the Hon. Thomas Corwin, Secretary of the Treasury (Ex. Doc., Senate No. 36, 31st Congress, 2d Session), is a very full, fair and convincing statement of reasons—historical, experimental and statistical—for adhering to the original Jefferson-Gallatin plan of 1807, elaborated by the plan of 1843, providing for civilian instead of either military or naval control: and his views were sustained by the abandonment, in Congress, of the scheme of transfer.

The then recent withdrawal of all but three of the fourteen army officers, and the threatened withdrawal of all the naval officers, from employment on the Survey, as the result of our brief conflict with Mexico, appears to have admonished Congress of the importance of maintaining the civilian organization ready and equipped for the continuance of its indispensably important work whenever the call to arms should summon its army or navy contingent to the field and monopolize all the attention and energies of the War and Navy Departments. The same admonition was soon afterward still more impressively conveyed by the abrupt withdrawal from the Survey of every representative of both the army and navy at or soon after the commencement of hostilities in the late civil war. But for its civilian organization under a civil department, whose functions are liable to be neither interrupted nor monopolized by the operations incident to war, the Coast Survey would have been incontinently dismantled and its functions paralyzed at the outbreak of the rebellion. But with its permanent civilian corps, familiar with every feature of work in field or in office, the Survey was enabled not only to measurably continue some of the more important of its ordinary work, but to continuously render to the military operations of the Union, service of inestimable value. Besides numberless reconnaisances and rapid topographical surveys for immediate military purposes about Washington, in the vicinity of Baltimore and Philadelphia, in the Virginia peninsula, at Vicksburg, Chattanooga, with Sherman's march to the sea, and in connection with nearly every important operation of the army or navy, and a multitude of hydrographic sheets and war maps rapidly supplied to blockading squadrons and commanders of expeditions, which service elicited at various times the highest commendation from Generals Sherman, McClellan, Banks, Butler, Totten, Barnard, Wright, W. F. Smith, &c., and Admirals Porter,

Dupont, Davis and others—on two occasions the Survey was able, through its continuing power of organizing effective surveying parties, to do work amply worth to the Government more than all the cost of the Survey since its organization.

With a bar so far to seaward as to deprive an approaching fleet of the benefit of any land-marks for reliable bearings, and with every buoy, spar, beacon or other aid to navigation removed by the Confederates, Port Royal lay in fancied security against successful attack from the expedition under Dupont and Sherman in November 1861. But within twenty-four hours after the arrival of the fleet off the bar the channel was buoyed under direction of a Coast Survey civilian, Forts Beauregard and Walker were speedily taken, and possession of the best seaport of the South was secured to the Union as a base of supplies and operations until the close of the war.

In April, 1862, a Coast Survey party, under fire of shot and shell and sharp-shooters and in advance of Farragut's fleet, determined the positions of each of Porter's mortar-boats and by triangulation their exact distances from Forts Jackson and St. Philip—renewing the triangulation with each change of a boat's position—so that the shot and shells from the Union fleet, invisible from the Confederate batteries, were dropped with unerring accuracy and irresistible effect within the doomed forts, compelling their speedy surrender. The Coast Survey's share in that operation which opened the lower Mississippi and gave to the Union New Orleans and a substantial foothold in the Southwest is glowingly described in the following:

EXTRACTS FROM COMMODORE D. D. PORTER'S LETTER TO PROFESSOR A. D. BACHE, DATED "HARRIET LANE, FORTS JACKSON AND ST. PHILIP, APRIL 29, 1862."

DEAR SIR: Amid the exciting scenes here, and the many duties that are imposed on me, I must steal a few moments to tell you something of the share the Coast Survey has had in our doings, and to thank you for the valuable assistance rendered me by the party you sent out here. * * * The results of our mortar practice here have exceeded anything I ever dreamed of; and for my success I am mainly indebted to the accuracy of positions marked down, under Mr. Gerdes's direction, by Mr. Harris and Mr. Oltmanns. They made a minute and complete survey from the "jump" to the forts, most of the time exposed to fire from shot and shell, and from sharpshooters from the bushes. * * * The position that every vessel was to occupy was marked by a white flag, and we knew to a yard the exact distance of the hole in the mortar from the forts, and you will hear in the end how straight the shells went to their mark. Mr. Oltmanns and Mr. Harris remained constantly on board to put the vessels in position again when they had to haul off for repairs, or on account of the severity of the enemy's fire. * * * I cannot speak too highly of these gentlemen. I assure you that I shall never undertake a bombardment unless I have them at my side. Mr. Gerdes has been inde-

fatigable in superintending the work, laboring late at night in making charts and providing the officers in command of ships with them, marking the positions of obstructions in the channel, and making all familiar with the main way. No accident happened to any ship going through, notwithstanding the gentlemen in the forts thought the obstructions impassible. * * * You must excuse my hurried letter, but I could not omit writing to thank your good fellows for what they have done for me, and to thank you for sending them.

* * * * * *

Yours very truly,
DAVID D. PORTER.

Professor A. D. BACHE,
Superintendent U. S. Coast Survey.

On May 16, Porter again wrote to the Superintendent:

"I forward to you by the Baltic a plan of Fort Jackson (or the remains of it) faithfully drawn under the direction of Mr. Gerdes, by Mess. Harris and Oltmanns, assistants of the Coast Survey. It is a striking specimen of the effects of mortar-practice, showing what can be done when distances are accurately determined, as they were in this case, by the gentlemen belonging to the Coast Survey."

The plan referred to, precisely depicting the mark of every shot and shell, and also the original field-sheet of Gerdes's triangulation and marking of positions for the Union mortar-boats remain among the archives of the Survey.

A mere *resumé* of the great service which, by reason of its independent organization, the Survey was able to render in that crisis of the nation's history, would require more than a score of these pages. It is enough to say, as the records show, that those services elicited warm expressions of the highest appreciation from the Union commanders under whose eyes the varied and skillful work was performed on land and sea and rivers.

In 1858, in response to a resolution of the American Association for the advancement of Science, a committee of twenty of the most distinguished scholars and scientists of America, to whom the matter had been referred, joined in a report on the History and Progress of the American Coast Survey, which is still extant in an octavo pamphlet of 125 pages, presenting an exhaustive and intelligent review of its objects, history, methods and results, its relations to various other departments and bureaux, commending the nature of its work on scientific and practical grounds, asserting its equality with the best work ever done, and its superiority, in rapidity and economy, to any similar work abroad, urging adherence to the existing general plan of organization, and quoting, in support of its own high estimate of the Survey, not only the unanimous opinion of the scientific, educational, and commercial individuals and organizations of America, but the almost enthusiastic encomiums of

such judges as Humboldt, Arago, Schumacher, and Murchison, extorted from those austere intelligences at a time when European compliments for American science or literature were rare indeed.

In 1871 (Act of March 3d), the field operations of the Coast Survey were extended so as to include the execution of a primary triangulation across the continent to form a geodetic connection between the Atlantic and Pacific coasts, and the organization has since been known as the U. S. Coast and Geodetic Survey.

In pursuance of the original plan of 1807 and of the completer plan of 1843, and to avoid disgraceful inferiority and imperfection in its results, the operations of the Survey were always — except when withdrawn from civilian control — conducted in conformity with the requirements of geodesy— it was in fact a Geodetic Survey. The transcontinental operations were not only strictly related to the survey of the coasts, (as essential to the harmony of the measurements along the Eastern and Western shores, and as affording a most valuable contribution to that knowledge of the form of the earth and its local variations which is essential to the accuracy of the surveys of the coast), but incidentally they supply to the traversed states accurately located points — otherwise practically unattainable by them—upon which to base their own topographical or geological surveys, for the construction of accurate County or State maps. It will also provide part of that framework without which no accurate map of the United States is possible. Upon that arc has already been achieved some of the best work ever done in accuracy of base-measurement, accuracy and range of observations and area of geometrical figures, and at much less than the cost of similar, but less notable, work abroad. That the enterprise is either premature or extravagant will hardly be urged in face of the fact that Europe presents not a single transcontinental arc of triangulation, but a complete net-work covering every country except Turkey and a portion of Russia, and that even in remote and mainly uncivilized India, a superb work of triangulation ten times as extensive as our transcontinental arc has already been been completed.

In 1878, a clause of the Sundry Civil Bill (June 30,) read as follows:

"And the National Academy of Sciences is hereby required, at their next meeting, to take into consideration the methods and expenses of conducting all surveys of a scientific character under the War or Interior Department, and the surveys of the Land Office, and to report to Congress, as soon thereafter as may be practicable, a plan for surveying and mapping the Territories of the United States on such

general system as will, in their judgment, secure the best results at the least possible cost; and also to recommend to Congress a suitable plan for the publication and distribution of reports, maps, documents, and other results of the said surveys."

The report (H. R. Mis. Doc. No. 5, 45th Congress, 3d Session, Dec. 3, 1878) recommends the consolidation of all surveys of *mensuration* under one head; has carefully considered the various questions, and believes that the Coast and Geodetic Survey is practically best prepared to execute the entire mensuration system required; and suggests such consolidation under the Coast and Geodetic Survey, its name to be changed to the Coast and Interior Survey.

At the same time it recommended the establishment of an independent organization, to be known as the U. S. Geological Survey, to be charged with the duty of examining into the geological structure, natural resources and production of the public domain, but that no surveys of mensuration be made by it other than local topographical surveys for development of special mineral deposits.

The recommendations of the Academy were so far adopted as to leave the Coast and Geodetic Survey in charge of the survey of the coast, and of the State surveys and interior geodetic work, to discontinue the various "geological and geographical" surveys, and to organize the U. S. Geological Survey, charging it with the duties specified by the Academy. Its functions were to be confined to geology, and not to embrace geodesy. (Sundry Civil Bill, March 3, 1879.)

Among the members of the Academy, as well as in the opinions submitted for its consideration, there seemed to be a general recognition of the propriety of remitting the surveys of mensuration to the care and accurate methods of the Coast and Geodetic Survey; and the director of the present Geological Survey, referring to the Coast Survey transcontinental triangulation and to its corps of trained experts, urged that its system of triangulation, then in progress, "should be made the basis of all future geographical work in the United States."

In his annual message to Congress, presented in December, 1882, the Secretary of the Navy recommended the transfer to his department of the Coast and Geodetic Survey, the Revenue Marine, the Life Saving Service, the Light House Board, and other Bureaus of the Treasury Department. The heads of the various bureaus named were invited by the Secretary of the Treasury to make such statements in regard, to the proposal as should seem advisable. Their replies published as Treasury Doc. No. 395 (January, 1883,) and the arguments presented in opposition to the transfer of any of the bureaus, were such that no action was taken.

The Sundry Civil Act of July 7, 1884 contained a clause providing for the appointment of a joint Commission of three Senators and three Members of the House to "consider the present organization of the "Signal Service, Geological Survey, Coast and Geodetic Survey and the Hydrographic Office of the Navy Department, with the view to secure greater efficiency and economy of administration of the public service in said Bureaus," &c.

The inquiry by the Joint Commission occupied nearly two years, including frequent sessions during several months. A large number of witnesses were examined and the organization and methods of each of the bureaus thoroughly investigated. The reports were accompanied by nearly eleven hundred pages of testimony. That portion relating to the Coast and Geodetic Survey, at least, was thorough and exhaustive, including written or oral statements from the National Academy of Sciences, eminent scientific experts, distinguished and experienced Naval Officers and hydrographers uniformly commendatory of its plan of organization and general methods and results.

The majority of the Joint Commission, in whose views both Houses concurred, declared that they—

"Do not feel justified in proposing a change in the organization and method of the Survey unless the most urgent reasons therefor can be given, especially in view of the fact that those best qualified to judge who have testified before the Commission, including some eminent officers of the Navy uniformly agree that, at least until the Survey of the Coast shall be completed, the work should be continued under the present organization."

They concluded, after thorough discussion, that—

"There is nothing in the testimony to indicate that the work now performed by the Survey can be more efficiently performed if transfer is made, nor is it shown that the Navy can more economically execute the work, so there is no reason either on the score of efficiency or economy for making the change." (Senate Report No. 1285, 49th Congress 1st Session.)

Such a conclusion must inevitably follow from a consideration of the facts:

1. On both occasions 1818,-1832 and 1834,-1836, when the Survey was under Naval control its performance was unsatisfactory. This involves no reflection on the Navy, but simply implies better co-ordination of various scientific and technical operations when under civilian control.

2. The Survey has been under civilian control for an unbroken period of 52 years with results which, whether in ex-

cellence of quality or economy of cost, challenge comparison with similar work anywhere.

3. Not one of the Naval Officers who has under the Superintendent had official supervision of the hydrography of the Survey, since the functions of a Hydrographic Inspector were suggested in 1861, has favored the transfer of the Survey to the Navy. With possibly one exception every one of them has been opposed to such transfer—an attitude to which responsible connection and intimacy with the Survey will almost inevitably lead any one.

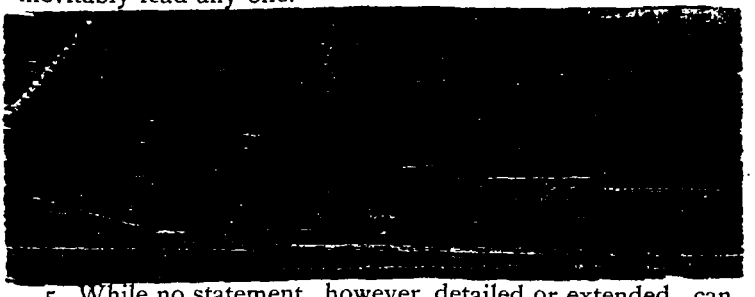

5. While no statement, however detailed or extended, can even remotely supply the place of actual experimental acquaintance with the blending and inter-relation of the varied work, the following terse synopsis, which was submitted to the joint commission, may give some slight idea of how little of the indispensable work falls within the scope of nautical functions, and how incapable even that little is of being separated from its various auxilliary operations:

The field work of the Geodetic Survey is in eight different lines, all but one (the fifth) of which are necessary to the production of a perfect map. These divisions are:

First. *Triangulation*, including base measurements, by means of which distances between prominent points are made known.

Second. *Astronomical observations*, by means of which directions of all measured lines are made known, and also the locations of points on the earth are made known by astronomically measuring their distance from the equator (latitude), and their distance from a prime meridian (longitude).

Third. *Leveling*, by means of which the heights of objects above mean level of the sea are made known.

Fourth. *Tidal observations*, for determining the mean level of the sea, from which heights are reckoned; also for predicting the rise and fall of tides for the use of navigators and others, and also for the reduction of soundings taken at any time to what they would have been if made at low water.

Fifth. *Gravity observations*, for determining the density of the earth.

Sixth. *Topography*, or the picturing by conventional signs of all the surface features of the land, its elevations and depressions, its streams, roads, canals, its forests, plains, and mountains, its towns, fields, &c.

Seventh. *Hydrography*, by means of which the configuration of the bottom of the sea, lakes, and rivers becomes known; also physical hydrography which makes known the character of rivers, tidal, and and ocean currents, their effects in producing progressive or periodic changes in the configuration of the bottom.

Eighth. *Magnetic observations*, from which we learn the direction in which the compass needle points, the changes in this direction, the intensity of the magnetic force which directs the needle and the variations of this force. and thus get material to foretell the changes of direction to which the compass needle is subject, and variations of the force directing it.

The order in which these operations are carried on is not an arbitrary but a logical one, and in this logical order the hydrography comes last.

2. The first need of the hydrographer in making his survey is a projection or skeleton outline map, showing the parallels of latitude and meridians of longitude, together with the shore line and all the land features visible from the water, prominent objects, church spires, houses, artificial signals, capes, headlands, and outlying rocks and islands visible from the shore. If, "off-shore" or deep-sea hydrography is to be executed, the variation of the compass and the latitude and longitude of all prominent objects must be first made known and shown on the projection, to furnish points of departure and to correct the tracks after returning.

3. Before the hydrography is begun, therefore, we, in general, require the astronomical work, the magnetic work, the topography; and furthermore, tidal observations must accompany the hydrography. Of all the data required by the hydrographer the scale of the proposed work and the projection come first in importance. On this projection must be shown in proper relative position all conspicuous points and marks useful for determining the position of the sounding boat. In short, all topographical features and complete shore-line are necessary, and before these can be had the triangulation upon which this topography rests must be executed.

Thus the hydrography requires for its execution, first, if in-shore, the triangulation and topography together with tidal observations; second, if off-shore, it requires the same data, together with the astronomical and magnetic observations.

4. After the execution of the hydrographic field work the rough original sheets are to be carefully verified by re-plotting the soundings, drawing the contours, making the finished drawing, engraving, and printing. This work is done by trained experts, who, by natural ability, education, and long experience, attained the best possible results.

5. The hydrographic surveys are made in part by naval and in part by civil parties. Civil parties are usually engaged upon hydrography in regions where it is expedient for economy's sake to execute the secondary triangulation, topography, and hydrography simultaneously. This is usually in interior waters, sloughs, lagoons, bayous, &c., where parties are organized to work advantageously on land or water, as need arises.

6. It is, therefore, obvious that to separate the hydrography from

the topography and triangulation would be idle, since it would require two distinct organizations to do the shore-work. Besides, since very considerable portions of our sea and river shores are alluvial, much of the future work will be the repetition of surveys in districts where the sea by undermining the land has acquired material for shoal building, or where the caving of river banks has caused channels to be obstructed. In such instances the topographical and hydrographical parties must be intimately associated, because their operations must furnish reciprocal results.

7. To put all those indispensable operations into the hands of naval officers is to entrust them, without preparation or previous technical education for it, with scientific works of the utmost accuracy and refinement, the proper accomplishment of which has required, from the corps of civilian experts now employed, many years of diligent study and hard work. The character of all but the hydrographic work is foreign to the requirements of the naval profession. Due proficiency in such extrinsic accomplishments cannot be acquired during such brief detail to such special service as is permitted by naval routine. That such proficiency does "not come by nature," nor as a part of the naval education and experience, is confessed by the repetition of the effort to secure legislation which shall relieve the Hydrographer of the Navy from active naval duty and give him permanent shore duty.

On the other hand, detachment from naval duties long enough to acquire such proficiency, must be seriously detrimental if not destructive to proficiency in naval affairs, to which, indeed, it is as foreign as would be proficiency in the work of the geologist, the biologist or the Fish Commissioner.

8. If the naval officers are not to perform those extrinsic operations, they must continue to be performed, as they are now, by trained civilian experts and specialists, which, of course, precludes the employment of any larger number of naval officers on Coast Survey work than are now employed.

9. As a matter of fact, for two years past, all the officers who could be spared by the Navy Department for Coast Survey work have been employed by the Coast and Geodetic Survey. Sometimes, indeed, the supply has been temporarily short.

10. The naval vessels are not adapted to Coast Survey purposes, except in a few localities, and in those localities their employment would involve greatly increased expense because of the superfluous size, &c., of the naval vessels.

11. It would be impracticable to substitute naval officers for the civilian office force which is, and in any event must be, employed in computing, drawing, engraving, electrotyping,

photographing, printing, compiling, and publishing the records and results and performing the clerical work.

12. There being no duplication of work done by the Coast and Geodetic Survey its transfer would in nowise simplify the work of the Government

13. If only the hydrography were transferred to the navy, all the auxilliary operations indispensable to, and frequently performed side by side with hydrography, must needs be performed by a separate bureau. Thus two bureaus would be required to accomplish what is now done by one and that too without the possibility of efficient and economical co-operation and co-ordination.

14. Naval officers on duty in the Coast Survey are at all times subject to the control and call of the Navy Department, and they enjoy every advantage of practice in navigation, study of the coasts and approaches, &c., &c., which they would have if the survey were a part of the Navy Department.

15. Twice already, since the work was begun, it would have been interrupted by war, but for its independent organization which enabled it, on two occasions at least, to render most vital service to the Union arms.

16. The surveys made on foreign coasts by the Navy are of the description usually known as reconnoisances not approximating to the standard of those made by the Coast and Geodetic Survey along all of our own coasts, except in Alaska and along the more desolate portions of Oregon and Washington, for temporary purposes; —a standard which has commanded the highest admiration from the most eminent authorities at home and abroad, and which must be maintained, unless we desire to sacrifice many elements of utility (to works of civil, municipal, constructive and military engineering), and to invite invidious and humiliating comparisons with the similar work being done by even the weaker of the nations of Europe.

CONCLUSION.

Since, therefore, the experiment of naval control repeatedly tried, has repeatedly produced unsatisfactory results, and the covetous demand of the navy for such control has, at every examination of the subject during a period of more than fifty years been refused; since no institution of learning or of science has ever recommended such control, but all—from the unofficial associations and universities to the legally accredited

organ of the Government, the National Academy of Sciences —have repeatedly urged its inexpediency; since no commercial or marine insurance organization, after intelligent consideration, has ever recommended such control, but, on the contrary, all have invariably, after such consideration, opposed it; since such distinguished naval authorities as Captain Smyth, R. N., formerly President of the Geographical Society, London, and Admiral Beaufort, R. N., long ago conceded that under the existing organization of the Coast Survey, though the "Americans were the last in the field, they have, *per saltum*, leaped into the very front of the rank," and that "the progress and character of the hydrography of Great Britain have severely suffered from want of co-operation with the Ordnance or land survey," which co-operation has been ensured by their co-ordination in theU. S. Coast Survey; since the expressed opinion of the most eminent scientists of the world, like Humboldt and Arago, accords with the assertion of Sir Roderick Murchison in effect that the existing organization of the Coast Survey "could not fail to make this one of the most perfect exemplifications of applied science of modern times," of the work of which he subsequently declared "all unprejudiced persons must agree that the Trigonometrical survey of the United States stands without a superior"; since the present form of organization of the Coast Survey, co-ordinating its work under civilian control and as a part of the Treasury Department was unanimously reported by a board, experienced in Coast Survey work, six of whose nine members were officers of the Army and Navy and it was reported *after* two experiences with Naval control; since no one of the Naval officers charged with the immediate official supervision of the hydrography of the Coast Survey has ever favored the transfer of the Survey to the Navy, but with one exception every one has earnestly opposed it; since the Survey now utilizes every Naval officer who can be spared by the Navy Department for Coast Survey work—the demand occasionally even exceeding the available supply of such officers—so that in the event of transfer no employment would be afforded for additional naval officers nor additional naval vessels, without diverting officers from professional duties and employment and devoting vessels to a work which their size, cost, &c., must render extravagantly expensive; since it would be impracticable to utilize naval officers in the multifarious technical office-work of the Survey, even if it were the duty of the Government to supplement its generosity, in educating a redundance of such officers, by crowding them into positions and vocations foreign to their profession and which should be the just reward and encouragement of the private citizen who

has educated himself; since a transfer would extend to naval officers no facilities, which they do not already enjoy, of practice in navigation, study of coasts, harbors, approaches, &c., and that too without the slightest interference with the discipline or authority of the Navy Department; since the reason assigned by the board for placing the Survey under the control of the Treasury Department in 1843—that "the object and purpose of the survey of the coast refer principally to the commercial interests of the country"—is confirmed by the fact that of the 34,016 of the charts issued by it last year only about 4,000—less than one-eighth—went to the Navy Department, and since the wisdom of maintaining a civil organization of the survey under a civil bureau where it may be exempt from the interruption of any of its functions and operations by the emergencies of war, has been twice signally vindicated, every consideration of experience, expediency, economy and prudence seems to unite in deprecation of a dismemberment of the Coast and Geodetic Survey or the transfer of any portion of it to the Navy Department.

489

THE SURVEY OF THE COAST.

By Herbert G. Ogden.

Lecture delivered before the "National Geographic Society" at Washington, April 13th, 1888. Published in the "National Geographic Magazine" Vol. 1. No. 1.

THE SURVEY OF THE COAST.

By Herbert G. Ogden.

At the inception of the Coast and Geodetic Survey in the early years of the century, so little was known of the dangers attending navigation along our extensive seaboard, that those who engaged in commercial enterprises were constrained to rely upon local knowledge and the reports of the hardy navigators who might carry their ventures to success. The charts available were by no means a sure reliance, and it has since been shown, contained many serious errors. The great headlands and outlying shoals that present the greatest obstacles to the safety of coastwise navigation, had not been carefully surveyed, and their relative positions to one another were only approximately determined.

The capacities of the harbors had not been ascertained, many were unknown; and even at the great port of New York, the Gedney or Main channel, was not developed until after the permanent establishment of the Survey in 1832, and the thorough exploration of the entrance was undertaken. A list of the sunken dangers and new channels that have been discovered during the progress of the work would fill pages. It is true such developments were to be expected in making a precise survey of the comparatively uncharted coast; but they, nevertheless, clearly point to the necessity of the work. We may also assume that the men who were controlling the destinies of the republic, realized that a knowledge of the coast was essential if they would succeed in building up a commerce, without which it was believed the prosperity of the people could not be assured. The deep draught vessels of the present day could not have traded along our shores on any margin of safety with the little that was known, and it is largely due to the perfect charting of the coast, that commercial enterprise has found it practicable to build the larger vessels of modern type to meet the increasing demands of trade.

The survey proposed was also required in providing for the public defence; as it is a self-evident proposition, that if we would protect a harbor from a hostile fleet, we must know not

only the channels by which the fleet might enter, but their relations to each other and the points of vantage that should be utilized in obstructing them; and in modern warfare to know these things only approximately will not suffice, for precision is practiced now in the art of war, as well as in the arts of peace.

The lack of charts of our extensive Coast line, or indeed, of any practical information that could be utilized in a systematic defence against foreign aggression, was only one of the many perplexities that surrounded our forefathers in building the nation. By their valor they had wrested a jewel from the British Crown, and had inaugurated a system of government by the people, which on their sacred honors they had sworn to defend. But not a generation had passed away when they saw new dangers, and were forced to contemplate again taking up arms in defence of their rights. The land was theirs, even far towards the setting sun, pioneers had explored it, and they knew whence might come a hostile foe. But of the waters from far away to the eastward, that flowed on until they washed every shore and filled the great Bays, even to the heart of the Republic, they knew little, save that over that almost immeasurable expanse might come the fleet of destroyers to penetrate they knew not where, and inflict incalculable damage months ere the dreary tales might be told. It must be remembered there were no telegraphs, no railroads, no steamboats, in those days, and time taken by the forelock was time gained. The speed of man could not be overtaken as we see it to-day in the wondrous inventions of the last generations. Each community was dependent upon itself, alone, in time of danger, to ward off the blow or yield to a more powerful foe; assistance could hardly be obtained in months and perhaps not then. It was not possible for any man to study or to learn the points of danger, and prepare a system of defence.

President Jefferson in his far-seeing statesmanship, threatened with war, realized the danger. A survey of the coast he believed essential to the national defence, and to the prosperity of the nation in time of peace. Had his wise counsels prevailed and the survey been prosecuted with vigor, instead of being almost immediately suspended for a quarter of a century, there can be no question but that it would have saved the people millions of dollars in expenditures and put other untold millions into their coffers, through the impetus it would have given to commerce years before commerce actually had a name in many that are now thriving seaport towns.

But it is not to be supposed the commercial importance of a knowledge of the coast and harbors was underrated because the Survey was not prosecuted. The people were poor, the task would be expensive and laborious. The appliances for the work were not in the possession of the Government, and above all, war came came sooner than was anticipated and the energies of the people were taxed to the utmost in combat with their powerful foe ; and when peace came again, there was the inevitable commercial depression that follows a resort to arms. The men of the day fully realized how illy they were prepared to invite commerce to our shores, or incite our own people to more extensive trade. There was nothing to adequately represent those magnificent harbors that have since become famous the world over ; nor of that long line of coast with its treacherous shoals, whereby those seeking new ventures might judge of the dangers to be encountered. The absolute ignorance that existed was aptly described in the Albany Argus in 1832, when the propriety of reviving the act of 1807 was under discussion, as follows :

"It had been discovered by an American statesman that parent countries always keep the commercial knowledge of their colonies as a leading-string in their own hands, and that as practical navigators, American seamen knew less of their own shores than the country and its allies from whose subjection we had recently delivered ourselves by force of arms. In large vessels, three nations, the Dutch, the French, and the English, approached our harbors with less risk than those bearing our own flag ; at the same time that in small and more manageable vessels, we had long been known as a match for the strongest. The president, Jefferson, saw the defect and the manner in which it must be remedied. We were at that time on the brink of war, about whose justice some of our politicians differed in opinion and it was, of course, more necessary to pray for a fortunate result than to preach the causes which had occasioned the quarrel. To have procured for the nation (even had it been practicable so to do) the old charts from the Dutch, French, and English governments, would have only been to put our knowledge on a par with theirs, while to execute more recent and accurate surveys, was advancing the new country above the old. With the clear and bold perception, which always distinguishes men of genius when they are entrusted in times of danger with the destinies of a nation, the president recommended a survey of the whole coast with all the aid of the more recent discoveries of science."

The proposed survey was strongly advocated by President Jefferson, and the Secretary of the Treasury, Mr. Gallatin, and in February, 1807, Congress passed the first act providing for the work. Thirteen separate plans, or schemes, were submitted for consideration; among the number was one by Professor F. R. Hassler, which was finally adopted, and Professor Hassler was appointed the first superintendent. It is not necessary to dwell, in detail, upon the varying fortunes of the survey during the three-quarters of a century that have passed since the original act authorizing it. The first thirty years of experiment, before it was finally established as a bureau of the Treasury Department, show only too clearly the ignorance and prejudice against which the supporters—we may say founders—of the survey had to contend. But they had only the experience of all men who attempt the inauguration of new things of which it cannot be shown that they will return a cash profit at the end of six months. To the opponents of the measure cash could not be seen at all, and the profit, whatever it should be, was only an intangible kind of benefit to be realized in the future by additional security to their property and commerce; but, in reality, as has since been appreciated, the direct saving of many millions of dollars annually.

The war of 1812 interrupted Professor Hassler's labors and it was not until 1817 that he actually commenced work; but he was stopped the next year by a limitation of the law requiring the work to be performed by the Military Departments. In 1832 Congress passed a special act reviving the law of 1807 and Professor Hassler was again appointed Superintendent. A further interruption occurred in 1834 by the transfer of the bureau to the Navy Department, but this was of short duration, as it was re-transferred to the Treasury Department in 1836, where it has since remained. Professor Hassler continued as Superintendent until his death in November, 1843. He was succeeded by Professor A. D. Bache, who was fortunate in assuming the charge under much more favorable auspices than had prevailed under his predecessor.

By the appropriation bill passed in March, 1843, the President was directed to appoint a Commission to reorganize the Bureau and prescribe methods for its future conduct. The plan recommended by the Commission was substantially that which had been followed by Professor Hassler. It was approved by the President a few months before Professor Bache assumed the

superintendency and has since been the law for the execution of the work. To have a law specifying in detail the methods that should be employed in prosecuting the surveys, that had been drawn by a special commission of experts and approved by the administration, relieved the Superintendent of much of the responsibility that had been borne by Professor Hassler, although it did not put an end to the carpings of the critics, or their advocacy of the less expensive "nautical surveys."

The reorganization provided for the employment of civilians and officers of the Army and Navy to serve directly under instructions from the Superintendent; thus securing for the service the opportunity to procure the best talent from either civil or military life. The civil element, it was assumed, would form a body of experts for the prosecution of those branches of the work not properly falling in the direct line of the military, and experience has demonstrated that while the results anticipated have been fully realized, the organization has not only proved effective but conducive to the advancement of the survey in many ways. The Civil War was a serious interruption, but alone, proved the wisdom of the civil organization of the Bureau. On the outbreak of hostilities the military element was necessarily withdrawn for duty with the Army and Navy; and it was not until ten years after the close of the war that officers of the Navy were again available, while officers of the Army, through the exigencies of the Military service, have not returned at all.

The organization was preserved through these fifteen years by the permanent civil nucleus, and the work suffered no deterioration, but steadily advanced, notwithstanding that the larger number of the civilians were constantly employed during the four years of the war with the Armies and Navy, in different capacities on the staffs of commanding officers; and that the urgent necessities of the government devolved additional labor, and temporarily, a new class of work upon the office force in compiling, draughting and publishing maps of the interior for the use of the Armies in the field. And when finally, our Armies were disbanded and our fleets reduced to a peace basis, and officers of the Navy resumed the execution of the Hydrographic work, it was but to step into the duties of their predecessors; they had, too, the additional advantage of the fifteen years' experience of the purely civil administration of the Survey, during which time the trained surveyors of the land had become equally expert as

surveyors of the water, and had added not a little to the improvement of Hydrographic methods. The History of the Survey shows a steady advance in methods of work from its foundation to the present day. But so equally has the march of improvement been due to the zeal and untiring efforts of the civilians and officers of the Army and Navy alike, that any distinction would be invidious.

The plan of reorganization of 1843 provided for a detailed survey of precision. It was to be based on an exact triangulation that would insure positive results, that the location of a danger or the development of a new channel, should be beyond doubt; and that the survey, when completed, should fit together as one continuous line, in which the distance and direction of any object on the map from any other object should be true, whether the objects were in hailing distance of one another, or at the extremes of our boundaries. So well was the scheme conceived, so perfect has it proved in operation, that it is substantially the guide for the closing labors of the great work, notwithstanding the many improvements that experience has wrought in the details.

Those engaged upon the Survey have been quick to profit by experience, and the master mind of Professor Bache, the second Superintendent, was not slow to adopt that which promised increased economy, rapidity or improvement. He drew from all sources, Science contributed her quota and the great inventive genius of the American people played an equal share in producing the final results.

The researches that were necessary to obtain the information required by law "for completing an accurate chart of every part of the coasts," have produced results of great economic and scientific value to the whole people, aside from their bearing on the interests of commerce and navigation; and which will contribute to the welfare of mankind long years after those who labored for them have passed away. A brief reference to a few of the many instances that might be cited to illustrate this perpetual influence to benefit our fellow men, may not be without interest to some of you present.

The application of the method of determining latitude by the measurement of small zenith distances, introduced by Captain Andrew Talcott of the Engineer Corps, U. S. A., while serving as an Assistant on the Survey, developed such radical errors in

the star places given in the catalogues, that it led to an almost immediate call for better places, and arrangements were made with the observatories of the country to obtain the necessary observations, the Survey to pay for the labor involved. Stimulated by the knowledge that better work was required to meet the new demand, observatories deficient in instruments procured new ones, and soon furnished more accurate star places. Continued observation has added still further improvement until to-day we have catalogues that furnish the highest degree of precision. Professor Chauvenet defines "Talcott's method" as "one of the most valuable improvements in practical astronomy of recent years, surpassing all previous known methods (not excepting that of Bessel by prime vertical transits) both in simplicity and accuracy." But the advantages of the method have been found to be of a practical nature also; as it is productive of large economy in time and labor and has reduced the cost of the Survey many thousands of dollars.

The introduction of the Electric Telegraph was utilized by the Survey immediately on the practical accomplishment of the first line built, as a ready and improved means for determining longitude. Indeed, before Professor Morse had demonstrated to the world the truthfulness of his theories and experiments, the bare possibility of their success, and availability in the instant transmission of time, had been discussed on the Coast Survey, and the method to be first employed fully considered. But as in the application of all things under new conditions, experience is the teacher, and improvements were frequently made, until finally the invention and perfection of the "chronograph" has brought the method to a degree of precision that little more can be looked for. This method of determining longitude, introduced, fostered and perfected on the Coast Survey, has been more far reaching than geographical boundaries. All civilized nations have adopted it as the "American Method," and by the greater accuracy and reliability of the results the whole world has profited. The saving that has accrued by the more perfect determination of longitudes and the consequent increased safety to commerce, may be counted by millions every year; until one stands aghast in contemplation of the immensity of the sum, and fears to reckon it, even approximately, much less to prophecy what it may reach in the future. The system is but a natural sequence of the development of the telegraph, but emphasizes in a marked

degree the spirit of progress that has ever been the active principle and guide in the conduct of the work, and advanced its methods to a state of perfection that has called forth the admiration of the scientific world.

The determination of the magnetic elements has been a subject of investigation from the early days of the survey; the knowledge sought was essential to the navigator, and in recent years, especially, has proved to be of the greatest practical value on shore. Limited by small appropriations the research was at first slow. But a trust fund left by Professor Bache, who always evinced the warmest interest in this particular investigation, added largely to the rapidity with which observations could be obtained, until now we have magnetic maps of the United States of such reasonable precision that they are authoritative, and are in almost daily demand. The results are more far reaching than their mere tabulation for the current year, as laws have been determined by which the declination in a locality can be ascertained for any year in the past.

There are but few places where the needle remains stationary, or points in the same direction, for any great length of time; it even changes daily and during the hours of a day; but the aggregate for a year will rarely exceed three or four minutes of arc. If we reflect then, upon the great use made of the compass in the settlement of the continent, and the proverbial neglect of the country surveyor of those days to record the local variation, or declination, with his work, we may see a little of the utility and practical purposes to which the results are constantly being applied. Property so little thought of a hundred years ago that a few acres more or less, lost or acquired, in its transfer defined by compass surveys, may suddenly assume a value in these days of progress that every square foot is worth dollars. When a dispute arises, deeds are examined, lost or obliterated marks are diligently sought for, perhaps one is found, surveyors are employed to run out the lines but only make the confusion worse. Instead of a few rods that were in doubt according to the best information, the surveyor's line makes it acres, and litigation looms up to eat the profits of the sudden rise; and there seems even then no satisfactory solution of the vexing problem. How valuable then must be the fact, that it is possible to compute the variation for years back, to the time the original survey was made, and furnish the deflection that will re-run the lines so

clearly as to render the descriptions in the deed intelligible. This is but a single instance of the practical application of the knowledge gained; and if its general usefulness may be judged by the numerous inquiries made of the Bureau, it is not unreasonable to assume that time will bear increasing testimony of its great economic value from those who traverse the land, as well as those who sail on the waters.

The study of the recurrence of the tides along our extensive Coast lines, and determination of laws that would satisfy the great variance in the different periods, was a problem of no little magnitude but the greatest possible importance to our commerce. Much of the traffic along the coasts literally moves with the tides, and the cost of transportation is enhanced or diminished as the tide retards or advances it. Hundreds of dollars of expense may be incurred on a single cargo that must enter on the high water, but through imperfect knowledge of the master of the ship, is forced after sighting his port, to wait for the next tide, perhaps over night, and is driven to sea by a sudden storm and the voyage made several days longer. Such mishaps are not infrequent, and even at the great port of New York certain classes of vessels must "wait for the tide." The investigation of this complex subject has resulted in the acquirement of a knowledge that enables the prediction of the time of high and low water, and the height of the tidal wave, years in advance; and the mariner may now carry with him the tables published on the subject wherever he goes, and be independant of the doubtful communications he may otherwise receive from the shore. How many lives, how many dollars, have been saved by the knowledge gained?

But the investigation of the Tidal phenomena is of great scientific importance also; and a practical assistance in the great problems involved in the preservation and improvement of our harbors, but in this connection it probably falls more properly under the head of that greater study of the currents and their effects in the erosion, and building of the shores; the movement of the sands and formation of shoals and channels; termed "Physical Hydrography." Our commerce depends largely on this study for its perpetuation, for without harbors commerce must cease; and without harbors that will admit vessels of the largest class it must deteriorate. If commerce finds increased profits in large vessels it demands increased facilities, and the bars to the har-

bors with but six or eight feet of water on them a few years ago, must have ten, perhaps fifteen feet now, or the people must suffer their trade to pass to some more fortunate or energetic neighbor. This may be a hardship; but the demands of trade are inexorable, the profits must be reasonably assured, and those who would have the trade must comply with the requirements. Thus we see the striving for harbor improvements; the weakest making the greatest outcry that they shall not be left in the race. And the improvements must come in the end, or at least be attempted, for it is as much a law of commerce not to be hampered by small freights, as it is the law of nature that water flows down hill.

The outcry for "improvements" never grows weaker; it is the expression of a sincere conviction that the life of the community and the welfare of the "back country" depend upon its success for prosperity; it will not admit a rebuff and knows no such word as failure. Alleged authorities are consulted, a scheme of improvement is proposed and Congress is asked to vote the money, and finally the improvements are attempted. To be successful, the plan must conform to known general laws and the peculiarities of local conditions, many of which are only ascertainable by comparison of surveys at different periods. Theories advanced on data collected by one survey, may be strengthened or disproved by the facts ascertained in a subsequent survey; and it is only when the plan proposed meets the general laws and the local conditions at the same time, that it holds out promise of success. The study of the questions involved has been greatly aided by the work of the Coast Survey in improvements already attempted, and will be of greater assistance in the future. A positive knowledge of what the local conditions were when a harbor was at its greatest capacity, is of the greatest help in indicating the improvements necessary to restore it, after deterioration, or to maintain it in the full measure of its usefulness. Reliable charts do this, but they tell only half the story. A cause must be found for the effects that have been produced, and the remedy suggested must overcome that cause or control it, that it may work good instead of evil. In Physical Hydrography we learn the forces that nature has given us in the tides, the currents and the winds, and divert them from powers of destruction, as man in his ignorance may have led them, or in their warfare with one another they may have led themselves;

and bring their mighty influence to protect, improve or maintain that which we originally had. Many harbors have suffered incalculable injury through the recklessness of these who live upon them, and whose daily bread is dependent upon their preservation; until the evil has become so great that commercial cities have now "Harbor Commissions," whose special function is the preservation and improvement of the harbors. The original surveys made by Coast Survey are the foundations on which they very generally must build, while re-surveys point out to them the obstacles that must be overcome. And thus it will ever be; and future generations endeavoring to meet the demands of commerce for increased facilities, will have still greater cause for thankfulness, that the wise men who inaugurated the work of the Coast Survey, determined that it should be executed with every improvement that science could devise; and that the able men who conducted it, did not yield to the clamor for quick returns and cheap results, of only momentary value. They will realize by the benefits they will derive from it, as do those now living who have watched its progress and development, that the best is the cheapest as it will be useful through all time.

In 1871 Congress authorized the execution of a Geodetic triangulation across the continent to connect the great primary triangulations along the Atlantic and Pacific coasts, and provided that the triangulation should determine positions in those States that made requisite provision for topographical and geological surveys of their own territories. Each year since then, a small sum has been expended on these works with gratifying results to the States that have availed themselves of the assistance. But it was not until 1878 that Congress designated the Bureau as the "Coast and Geodetic Survey," the official title it bears at this time. Many comments have been passed upon the action of Congress in extending the field of the survey to the interior in the establishment of a "Geodetic Survey," which has been looked upon as a purely scientific research for which the people had no immediate use, and could well afford to wait. But if the tree can be judged by its fruit, there will be no lack of testimony to the economic value of the Geodetic Survey in the near future; aside from its scientific and practical usefulness in perfecting the Survey of the Coasts. It will eventually be the basis for a precise survey of the whole country, determining boundaries, settling disputes, and furnishing incontrovertible

data by which later generations can reproduce the marks placed by the local surveyors who make use of it, should they become obliterated or lost; thereby causing a direct increase in the security of property boundaries, and diminution in litigation that now costs millions of dollars annually. Some of the practical advantages to be derived from such a work, are now being demonstrated in Massachusetts in the "Town boundary Survey," as it is called, in which the corners, or turning points of the boundaries are being determined trigonometrically in a subsidiary work based upon the Geodetic triangulation of the Coast Survey. Each boundary corner in this scheme becomes a fixed point, and the direction and distance of many other corners are at once accurately ascertained in their true relations to it. The town boundaries will in due time be made the bases of referenee for all local surveys and subdivisions of property; so that, eventually, there will be developed a cadastral map of unrivaled excellence, to supplement the Topographical map that has just been completed.

The imperfections of our "land surveys," brilliant as the scheme was conceived to be at the time of its inauguration, demonstrate only too clearly the extravagance of primitive methods in matters intended to be enduring. As time passes and property taken up under the "land survey" becomes more valuable, the difficulty of accurately identifying boundaries becomes more serious, until finally, it is only after long litigation that rights are determined. The inherent defect in the land survey to accomplish the purpose for which it was designed, lies in the fact, that while it parcels out the land, or a section of land, in a given number of lots, it fails to provide the means for identifying the boundaries of the lots at any future time; the marks placed for this purpose become obliterated or perhaps are moved by designing men, until a large area may be involved in great uncertainty. A triangulation covering the same ground and controlled by Geodetic work, determining the true positions of the old marks that may be left, would be the most economical and precise method of relieving these uncertainties and fixing for all time the location and boundaries of the lots originally parcelled out, by observations and marks that cannot be lost or obliterated.

The system of weights and measures in use throughout the country is largely due to the patient labor of the Coast Survey. Required by law to have standards of length, the only bureau in

the public service that required such a measure of precision, it was in the natural order of events that the Superintendent of the Survey should also be charged with the maintenance of standards of Weight and Capacity. The duplication of standards for the use of the people was begun under Mr. Hassler, so long ago that the system has really grown with the population. Wise legislation has fostered the sentiment of uniformity until we are indeed blessed, that wherever we may be in all our broad domain, a pound is a pound, a yard is a yard, and a bushel is a bushel. Manufacturers receive their standards from the Bureau, and in special cases have their products tested and certified. And individuals engaged upon work of great refinement, seek the stamp of the Bureau, also, upon the measures on which they must rely. But so careful is the Bureau to preserve the integrity of its certificate, that the stamp is refused except on weights or measures of approved metal and workmanship. Business men realize in every day life the benefits that have been derived from the simple legislation that inaugurated a supervision over the weights and measures of the country early in her history, though they may have no conception of the endless annoyances they would have been subjected to had the preservation and duplication of standards not been provided for.

The limited time assigned to me will not permit a detailed statement of the researches made by the Bureau in all the different branches of science related to the practical conduct of the work, much less a reference, even, to the many improvements instituted in the practice of surveying. As in the case of the observatories called upon to replace their defective instruments with those more refined, to enable them to furnish star places of sufficient precision to meet the improved method of determining latitude, so has the demand ever been upon the experts employed upon the work in all its branches. The Triangulation, Topography, Hydrography, Astronomy and Magnetics have all passed through several stages of development and improvement in methods and instruments, to meet the requirements put forth by those charged with the conduct of the work, that the full measure of harmony desired should be secured and that they might supply the demands made upon them for information. Imperfect results indicate defects to be remedied, and it is to the credit of those who performed the labor, that they overcame one difficulty after another as they were developed, until now the methods and

instruments in the hands of experts, will produce far superior results at a much less cost than was possible at the time the Survey was inaugurated.

The charting of the great ocean currents, has long been an interesting investigation to hydrographers the world over. A sketch of the efforts, projects, and devices that have been resorted to by the Coast Survey in the attempt to unravel the mysteries of the Gulf Stream, would exemplify the continuous demand for improvement and new exertions under which those employed upon the work have always labored, although the full measure of knowledge sought has not yet been obtained. But it is not necessary to enter into these details at this time ; let it suffice that many experiments and failures pointed out the path to be followed by subsequent observers, and stimulated to new efforts, until at last appliances have been perfected that have already produced wonders, and it is safe to predict, will ere many years show the ocean currents on the charts of the world with the same relative precision that the currents in a river or harbor can now be indicated. Lieutenant Maury gave us current charts that were a marvel in their day, but his information, or data, was defective, and his conclusions, therefore, only approximate; and how to improve on the data he had, has ever since been the subject of research. The depth of the ocean is necessarily an important factor in the study of its features, as erroneous depths lead to false hypotheses. The introduction by the English of a method of sounding with a wire, has therefore proved an important advance. American officers have perfected the apparatus and severely tested the methods, demonstrating the reliability of the results and the total unreliability of the old deep sea soundings taken with a line. These accurate wire soundings have revealed new facts, disproved old theories and formed new ones to guide future researches. So successful is the improved apparatus that specimens of the bottom of the ocean have been brought up from a depth of five miles. The great value of this system, however, is not confined to the mere ascertainment of depths for the hydrographer and cartographer, as may be readily demonstrated by referring to the reports of the Fish Commissioner. A further step towards improving on Maury's results ; the crowning glory that is to shed light on much that has been dark, and trace out those ocean currents we have heretofore vainly endeavored to follow, is found in the invention and devices of a naval officer

attached to the Survey, whereby he can anchor the ship in mid-ocean and observe the direction and velocity of the current as from a stationary body, and with a "current meter," also his own invention, determine the same factors hundreds of feet below the surface; thus ascertaining not only the movement at the surface, but the depth of the body of water that moves, and the velocity at various depths, so that finally we have the volume—a quantity—to be followed until it meets other currents or is absorbed in the vast expanse. Already current observations have been recorded with the ship anchored at the great depth of eighteen hundred fathoms; and arrangements have been perfected that it is believed will prove successful at the greater depth of three thousand fathoms. It is impossible with our superficial knowledge of the great ocean currents to estimate the benefits that will be derived from their systematic exploration. It is not probable that the absolute determination of their limits would produce such a revolution in navigation, as was caused by Maury's wind charts, but it is reasonably certain they would prove a valuable assistance to the navigator, and in the great channels and bays of the world increase his facilities for the successful navigation of his ship. Not a little of their value, perhaps the larger part, will be of an indirect nature, resulting from their study by investigators in the natural sciences interested in utilizing the bounties of nature for benefit of man.

The Survey was instituted for the determination of facts, and the presentation of them in an intelligible form. It does not promulgate theories, and has no use for them beyond the assistance they may be in indicating the line of research necessary to ascertain the facts; but rather leaves to the student the formulation of the theories that may be deduced from the facts presented. The publications of the Survey are, therefore, calculated to contain only useful, practical information, on the subjects of which they treat. An examination of them will show this to be the case, and further, that error has more likely been committed by over-caution, than a too free use of the material at command. Doubtless much has been suppressed through lack of means, as it has always been the aim of the Superintendents to expend the appropriations in producing the most useful results, whether in surveys to be made or facts to be published. It necessarily requires many years to complete a precise survey over a large area; and in the work of the Coast Survey, with the people in

all sections of our extended coast line petitioning for surveys at the same time, the problem was beset with additional difficulties. Fortunately Congress prescribed the method on which the work should be conducted, and that the method permitted making surveys widely separated with the certainty that they could eventually be joined and form a consistent whole. Soon after the plan of reorganization of 1843 had been adopted, surveying parties were on the Atlantic and Gulf coasts at many points; the principal harbors and headlands with outlying shoals were first surveyed and it was but a few years before charts of them were published. The less important shores between these points were left for future work, but Hydrographic examinations or Nautical surveys, were made of them, and preliminary charts of long stretches of coast were issued, to be followed when the surveys had been completed by the finished chart of reliable data. So elastic was the system adopted for the conduct of the work, that its availability was limited only by the annual appropriations. Soon after the annexation of Texas surveying parties were on that coast, and on the acquisition of California a few years subsequently parties were soon at work there also ; and after the close of the war and purchase of Alaska, the immense field thus opened was attacked with equal promptness, and a reconnaissance made that resulted in a map of considerable accuracy. As the precise surveys were extended the charts and plans published from the preliminary surveys were withdrawn, the new charts necessarily having later dates.

The original surveys of the Atlantic and Gulf coasts are now practically completed, but very little more remaining to be done in a few comparatively unimportant localities. On the Pacific coast precise surveys supplemented by careful reconnaissance of less important sections, define nearly the whole outline, excepting Alaska, but a great deal of work is still required to obtain the full measure of information necessary to accurately chart it. And in Alaska, Nautical surveys have developed long stretches of the "Inland passage" and the most important anchorages, supplementing the general reconnaissance of the whole coast line. A very large proportion of our shores, however, are subject to such radical changes from natural causes, that the survey of the coast can never be brought to final completion. Examinations and re-surveys are as essential as was the original work, if the material already acquired is to be maintained in the full measure

of its usefulness, and commerce is to continue to reap the legitimate benefit of the expenditures already incurred. Fortunately the survey has been conducted on such sound principles it meets the increasing requirements for accuracy demanded by the navigation of to-day, as fully as it did the more simple needs of the navigator of forty years ago, and it is fairly believed, whatever may be the necessities of the future, that it will still supply the information desired.

The Surveys are published in four hundred and fifty charts designed to meet the various needs of the Navigator and Civil Engineer, for either general or local purposes ; over thirty thousand copies of these are issued annually and there is a steadily increasing demand.

The assistance rendered to the armies and fleets of the Union, in the late Civil War, is a chapter in the history of the Survey that should not be forgotten. The office in Washington was beset with demands for information from all over the country, for descriptions not of the coast alone, but all sections of the interior representing the seat of war. Fortunately the experts were there who, under the direction of able chiefs, could collect and compile such material as was available. The labor of the office in this cause resulted in the publication of a series of "War Maps" of the interior, for which there is frequent demand even at the present day. This was all additional work to a force already overburdened in the preparation of manuscript maps and special information, compiled from the reports of the Field parties ; especially of those localities that had only recently been surveyed. And in all the din and excitement of the call to arms, with hosts of stalwart, honest men assembled around him, that might give in their learning the wisdom of the world, the controlling mind of the Survey, that had labored diligently and sought knowledge patiently, was a chosen counsellor of the Chief of the Nation. Declining military honors, the profession in which he had been educated, he devoted himself with renewed energy to assisting the nation's efforts in those special duties he knew so well how to perform. A patriot himself of the purest type, he inspired those around him by his ennobling spirit and zeal in the cause.

An average of twenty parties were maintained with the Army and Navy during all the years of the war, rendering services of acknowledged value to the military forces. An officer of the Coast

Survey piloted the fleet into Port Royal; another led the Iron Clads in the attack on Sumter; a third stationed the fleet in the bombardment of Jackson and St. Philip; and a fourth rendered signal services in the assault on Fort Fisher. They were on the Peninsula, guides in the wilderness on the retreat to Malvern Hill; at Chickamauga, Knoxville, Missionary Ridge; the march to the Sea and pursuit through the Carolinas; on the Red river; before Petersburgh; in the Sounds of North Carolina; the Sea Islands of Georgia and Florida and the swamps of Louisiana; and, wherever they went, few in numbers though they were, they gained honor for their cause and credit for their Chief.

The Survey of the Coast has excited the admiration of the whole civilized world for its thoroughness and accuracy, and has not been excelled by the most advanced nations. It has justly been claimed to be a scientific work, as well as a practical one, for science has guided those who have conducted it and led them through the fields of their labors on the only sure basis to produce knowledge. And the great knowledge that has been acquired by its scientific prosecution, is beyond comparison with the little that would have resulted had it been conducted on the less thorough methods of Nautical Surveying that have been so earnestly advocated. We cannot compute the value of what has been learned in dollars and cents; that it has saved to the Nation many times over, all that it has cost, does not admit of a doubt. Its educational influence has been widespread, extending beyond the seas, and coming back to us with cheering words of encouragement and praise. Practical men utilizing the results of the great work in the business affairs of life, use no stinted phrases in the encomiums they bestow upon it; Military men compelled to rely upon it in the perils of warfare, have not found it wanting, and have given only praise for the great help it was to them; Scientific men, ever watchful of that which is true, have approved it the world over, and cite it as an example of the great profit that may come to a people, free to utilize Science in the conduct of practical work. Our institutions of learning have adopted its publications in text-books. Our merchants venture millions of dollars daily on the veracity of its statements, and our mariners risk their lives on the truthfulness of the Surveys. It has added to the prosperity of the nation in peace—to her glory in war; and when history shall record its awards to our people, there will be no page of the galaxy with more honor than that which bears

508

tribute to the genius of American Science, in the work of the Coast Survey. From ignorance most profound we have been raised to knowledge almost perfect; and well may the commercial communities by their associations and exchanges bear the testimony to its value that they do, and have done in times past; as might the whole people for the wise legislation that established the work, that has defended it, and we may hope will perpetuate it for its inestimable benefits to them all.

509

THE COAST SURVEY.

BY

One who has Examined Public Documents.

From the New York Times
November 1858.

"Nothing extenuate, nor set down aught in malice."

Blank page retained for pagination

510

[From the New York Times.]

Nov. 1858.

THE COAST SURVEY.

It requires but a glance at the anonymous letters published in the New York *Times* of the 17th and 18th inst., and since circulated in a pamphlet form, under the signature of B. B., to show every intelligent and honest man that the writer, under the pretext of economy in the administration of the Government, endeavors to conceal a malicious attack upon one whose late years have been devoted with untiring energy, unsullied honor, and ceaseless industry, to the accomplishment of one of the most important works ever undertaken by any civilized government. A work national in its character, and of world wide importance and usefulness; a work of humanity, the object of which is the safety and welfare of the lives and property exposed, continually, to the multitude of dangers and accidents incident to the navigation of our dangerous coasts.

In order to prepare his poisonous insinuations for the public ear, the writer makes a *show*, at least, of virtue, and commences by delivering a lecture on political economy, in which he modestly charges our national legislators with obtaining their elections by deceit and fraud, and when assembled in Congress they become a horde of thieves, plundering the people, and trampling on their rights. The President and his Cabinet are only accomplices in a grand scheme of swindling. The Presidents of the Republic, from John Quincy Adams down to the present time have all made "fair promises of economy at their inaugurations, which they have regularly violated immediately afterwards." The present honored Executive is not excepted in this wicked denunciation, and his eminent Cabinet now "under the control of a jobbing

interest," are threatened with *starvation* if they will not listen to the slanderous imputations of an anonymous individual upon a public officer, against whom even the writer's malice finds no charge, and whose highest crime is said to be, that he has accomplished his public duties to the satisfaction of his country. But the approbation of a nation, whose glory has been enhanced by the execution of one of the most brilliant scientific works of the age, falls upon the jealous ear of this individual as praise lavished upon an enemy, and he pours out the bitterness of his soul upon honored statesmen, worthy men of science, reverend ministers of the Gospel, the army, the navy, even honest mechanics and artisans—all who can be supposed to feel a just pride in the great national work, at the head of which his enemy is placed.

Determined to accomplish his design at any sacrifice, patriotism seems to have forsaken him, and he condemns the Light House system, attacks the Smithsonian Institution, and the American Nautical Almanac, denounces the American Association for the Advancement of Science, declares that our Senators and Representatives in Congress not only habitually violate their sacred obligations of trust and duty, but with the professors in our colleges, our scientific men of reputation, the army, the navy, literary men and clergymen, they are leagued for the accomplishment of outrageous designs upon the public Treasury. He professes to be very solicitous about the public expenditures, when even the mechanics and artisans of whom he speaks so contemptuously, as well as the statesmen whose opinions and judgment he affects to despise, can see but one motive in his publications, which is to slander the Superintendent of the Coast Survey. Men of high and low degree, of whatever art or profession, come equally under his sweeping condemnation, unless they are willing to listen to the insinuations which he deals forth upon the public labors of a man who, according to his own statements, must stand infinitely above him in the estimation of the world. The Superintendent of the Coast Survey, says the writer, is so highly esteemed as a scientific man, and has performed his public duties so well, that no one will listen to my abuse of him, and defenders are sure to rise up whenever he is attacked. This is a pitiful position for the writer to be placed in, and it may be due to the fact that his motive is too apparent; that while he professes to discuss the public Institu-

tions of our country, he displays a deplorable ignorance of them, and that after announcing his object to be the exhibition of the faults in the present mode of prosecuting the Coast Survey, in his eagerness to originate high sounding accusations against the Superintendent and his assistants, he forgets to allude to the mode of prosecuting the work, its progress, or the amount accomplished. His denunciation of the President and his Cabinet, the Light House Board, the Board of Regents of the Smithsonian Institution, the members of the American Associaton for the Advancement of Science, members of Congress, the clergy, mechanics and artisans, do not appear like the calm and dispassionate appeals of a man who has in view his country's good; but rather like those of one who endeavors to clothe with the garb of public virtue, an act which he fears his readers will discover to be dictated by personal animosity alone. He has evidently bestowed much thought upon his mode of attack, and has come to the conclusion to raise a hue and cry, to alarm the people, to threaten the administration, to excite the fears and pride of our statesmen by taunting insinuations—in short, to stampede the country by the variety and enormity of his accusations. In what complimentary terms he alludes to the Secretary of the Treasury, who is "not the equal of one of his subordinates," to the Board of Regents of the Smithsonian Institution of which the President of the United States is President, the Chief Justice of the Supreme Court is Chancellor and Regent, and the Vice President of the United States, the Mayor of the City of Washington, Stephen A. Douglas, James M. Mason, James A. Pearce, of the Senate; three distinguished members of the House of Representatives, Richard Rush of Philadelphia, Gideon Hawley of New York, Professor C. C. Felton of Massachusetts, and General Joseph G. Totten Chief Engineer of the U. S. Army, are Regents. What a compliment to these distinguished men, to be told that they have disregarded the trust imposed upon them under a sacred bequest, and have made the Smithsonian Institution "an *appendage of the Coast Survey*," and how alarming to their pride to hear that they allow themselves to be controlled by the Superintendent of that work.

The Light House Board will become panic stricken, of course. This Board is composed of the following distinguished members: Hon. Howell Cobb, Secretary of the Treasury, President; Com-

modore Shubrick, U. S. Navy, Chairman; General Totten, Chief Engineer U. S. Army; Captains Humphreys and Franklin, of the Topographical Engineers; Captain Barron and Commander Jenkins, U. S. Navy, and Professors Henry and Bache, citizens. These gentlemen have no minds of their own; according to this writer, they are mere sticks, and like the eminent members of the Board of Regents, they assemble and consult together only to submit all their responsible duties to one of their number. There has even been a shameful influence brought to bear in Congress in the creation of this distinguished Board of Officers to Superintend the location and erection of Light Houses along our coast; the loss of human life, the wrecks of vessels, the destruction of property, have had no place in the thoughts of our Senators and Representatives in Congress; there is no patriotism, no philanthropy, no wisdom among our Legislators, all are under the controlling influence of one simple man of science, and to extend his power and patronage, Congress established the present efficient Light House system, and created a Board of Officers to control it; erected the Smithsonian Institution, the noble bequest of an English philanthropist; created, and now sustain, the American Nautical Almanac, and other kindred institutions. In fact our national legislation has been degraded to personal "uses" and public "abuses," all for the purpose of glorifying Professor Bache at the expense of the public interest. But an act of redemption is pointed out, which will at once restore our Executive and our statesmen to the favor and regard of this nameless individual, and save our beloved country from ruin and further disgrace.

Having endeavored to impress upon his "unlearned" readers a conviction of his own purity of motive by such high-sounding views of political economy, and such choice expressions with regard to the patriotism and public virtues of our Executive, Statesmen, and men of Science, the writer concludes that he has succeeded in concealing his true design, and proceeds to particularize his accusations against the Superintendent of the Coast Survey in a series of propositions which he feels sure will be received as truths, coming from one who has thus established his reputation for patriotic and disinterested criticism.

He is not sure that it will suit the temper and disposition of our people to recommend the entire abolishment of this grand

survey of the coast, in the full tide of its success, and when within a few years of its completion—merely for the gratification of one man's revenge—and therefore commences thus:

"Exception is taken only to the mode in which the Coast Survey is prosecuted. To present the matter fully, access to public documents, and to the departments, is needed, neither of which sources is available for the present occasion."

This political economist, this reformer of the morals of our public men, is about to show that the *mode* in which the Coast Survey is prosecuted, at present, is faulty, and yet with a want of tact which can only be attributed to his overflowing malice, he confesses that he has no documents to which he can refer, that he has not examined the subject at all, and that even the accounts of expenditures he has only "gleaned from a few statistics which serve to excite rather than gratify his curiosity." Beginning with the announcement that he only objects to the "*mode of prosecution*" of a scientific work, men of intelligence would expect that mode to be discussed, but there is not in all his subsequent tirade about Professor Bache and his assistants, the most remote allusion to the manner in which the survey is prosecuted, the progress from year to year, the amount done, the amount remaining to be completed, or a comparison of the work with its cost. He justly concludes that for *his purpose* "public documents are not available."

The Coast Survey Reports from 1844 to the present time, are to be found in every library in the country, giving full and detailed accounts of the progress of the work from year to year, the amount of work performed by each assistant, and by each draughtsman, engraver, tidal observer, and aid, with the cost of such work, and the place it occupies in bringing the whole survey to completion.

These public documents have ever found their way to Europe, and the sources of information which this writer avoids, are thus spoken of by one of the members of that "brotherhood of science abroad," to whom the Superintendent and his assistants are so "insolent and supercilious, that the courtesies of the country are declined and its territory avoided because their science has such representatives here." Captain W. H. SMYTH, President of the London Geographical Society, in his late address before that Society, thus speaks of the Coast Survey and its "insolent and supercilious" Superintendent and assistants.

"The very able and detailed report of this grand survey by Professor Bache, was forwarded to you by the Honorable Edward Everett, and in every respect, is a model of works of that kind. The Coast Survey of the United States is a truly national undertaking, and has been most creditably conducted through all its various departments of science. *I have studied the question closely*, and do not hesitate to pronounce the conviction, that though the Americans were last in the field, they have (*per saltum*) leaped into the very front rank. The precision with which every observation is recorded, the light which is thrown collaterally on meteorology, magnetism, tides and currents, as well as hydrography and pure geography, render such reports encyclopedias of great value."

It evidently did not occur to our anonymous correspondent that some of his readers may have examined these "encyclopedias," these documents which he has not found "available," and which have elicited such sounds of praise from the Old World; and that patriotic pride in our national honor and glory, united with the higher motives of philanthropy and humanity, may have actuated our statesmen, our men of science, our clergy, our professional men, our army and navy, and even our mechanics and laborers, in sustaining a national undertaking, which is thus generously acknowledged to surpass in excellence the corresponding works of Europe.

After announcing that he had no available documents to which he might refer, the writer proceeds, nevertheless, to give an account of the appropriations for the Coast Survey from the year 1807 to the present time. His figures have been published to the world again and again; they are printed in the Coast Survey reports, in the Reports of the Secretary of the Treasury, and in the proceed ings of Congress. When compared with the work accomplished, they show the most remarkable economy ever attained in a national undertaking of this character, as a comparison with foreign surveys will show. The United States Coast Survey was not actually begun until 1832. It was under the Superintendence of Mr. Hassler until 1844, and Professor Bache has had charge of the work from 1844 to the present time, fourteen years. According to the statement of the correspondent of the *Times*, the total cost of the United States Coast Survey up to the present time, is about $4,500,000, and is now estimated by the Superintendent, from the

experience of the past that the Atlantic and Gulf coasts will be completed in twelve years more.

The trigonometrical survey of the British Islands, was commenced in 1791, and had cost, up to 1856, $12,000,000, and it is estimated that $8,000,000 more will be required for its completion. This expenditure is exclusive of $17,000,000 commencing in 1837, for parish maps. The whole number of persons employed on the trigonometrical survey in 1840 was three thousand five hundred. The hydrographic surveys of England have cost in the last twenty years $10,000,000, the average number of persons employed, yearly, in these surveys, being fifteen hundred. This is exclusive of the English Arctic and Antarctic Expeditions. The hydrographic survey of the British Islands is still incomplete on account of a want of coöperation with the land work. The first sounding lead was thrown in St. George's Bay in 1836.

The surveys of France have been in progress nearly one hundred years. The new map was commenced in 1818, and is now only two-thirds finished.

The cost of both the French and English land work is about five times the cost of ours, and there have been employed on the new map of France, since its commencement, twenty-five hundred persons, men of education, besides the laborers. The length of the coast of France is about 600 miles, only, and its survey required twenty-eight years for its completion. The cost of the hydrography of France, alone, since 1834, has been $4,300,000. Austria has expended $500,000, annually, for the last seventeen years in her trigonometrical survey, and contemplates an increase of yearly expenditure. All the governments of Europe possessing sea coasts, have either finished or are now making complete surveys of their coasts, besides trigonometrical surveys of their whole territories.

The United States have an extent of coast greater than that of any two nations of Europe, a coast abounding in dangers, and upon which, notwithstanding the light-houses, charts, and all the aids which a liberal government can furnish to the navigator, hundreds of wrecks are scattered annually, involving, according to the *New York Herald*, a yearly loss to the American underwriters of fifteen to twenty millions of dollars.

Our statesmen, following the example set by those of the old

world, have established a Light House system, and a Coast Survey, combining all the advantages of those of Europe, without their defects. The *Coast Survey* is thus spoken of by SIR RODERICK MURCHISON, the eminent English geologist, another member of that "brotherhood of science, who declines the courtesies of our country on account of the insolence and superciliousness of Professor Bache and his assistants."

"The very efficient manner in which the Coast Survey of the United States is conducted under the superintendence of Professor Bache, has been alluded to by my predecessor. I have now the pleasure of mentioning, that the last annual report of that distinguished physicist relating to the progress of the work, is, if possible, more worthy of notice than any that have preceded it; for in that document you have all the ways and means by which such results are obtained along all the Eastern coast, through nineteen degrees of latitude, and can mark with admiration the rapidity with which the surveys of the Western shores of that continent have been carried on. The systematic coöperation of able surveyors of the naval and military service, combined with, and subordinate to, a central system of direction in the Treasury Department, and superintended by astronomers, whose chief is Professor Bache, could not fail to make this *one of the most perfect exemplifications of applied science of modern times.*"

Which will probably be the voice of posterity, and which will find a sympathetic response in the hearts of the American people; the above quotation from an eminent foreign statesman and man of science, or the rancorous effusions of an anonymous letter-writer?

With the comparatively small amount expended on our coast during the last twenty years, the following statistics will show, nevertheless, that the Superintendent and his assistants have not been idle.

During the superintendence of Professor Bache, the reconnoissance has been extended over 40,000 square miles; eight primary and forty-one secondary base lines have been measured; 30,000 square miles of primary triangulation have been executed; 15,000 miles of shore line surveyed by the plane table; the positions of 5,000 points determined; three millions and five hundred thousand soundings made; 1400 manuscript maps executed. The records of

triangulation observations fill 600 volumes, and of astronomical observations 460 volumes; the records of computations 800 volumes, and of tidal observations 1200 volumes; 345 electrotype plates have been executed; 280 preliminary charts and sketches, and 52 finished maps published, and 90,000 copies of the same distributed.

These are but a part of the statistics showing the amount of work done during the last fourteen years. An account of the discoveries of dangerous shoals, rocks and reefs, new channels, and the development of the laws of the tides and currents along our coast, would occupy much more space than could here be devoted to it. These discoveries and developments have been the cause of the saving of property to many times the amount which the survey has cost from the beginning, and when it is considered that two hundred thousand seamen and several millions of passengers are continually exposed to shipwreck and death amid the dangers which it is the object of the Coast Survey to discover and point out, the safety of life is not the least of the benefits arising from this work. All this information might have been found in the Coast Survey Reports if they had been "available."

We have said that this writer does not allude to the progress of the Coast Survey; he does, however, in one place, present a masterly comparison of the progress under Professor Bache during the last fourteen years, with the work executed by the first distinguished and honored Superintendent, Mr. Hassler. He says: "In 1842 the select committee of Congress asked that distinguished man, '*Do you think that under the most favorable circumstances, and with a continuance of a yearly appropriation of* $100,000 *the survey of the coast can be completed in twenty years?*' He replied, '*Perhaps.*'" The good old man—peace to his memory—did not wish to say no; but he expressed his doubts in the strongest language at his command, and added, "The progress is slower at first, but the means increase as the work proceeds." "Mark," says this letter writer, fourteen years afterwards, "how the theory of Hassler and the practice of the present Superintendent repel each other: as the means increase, progress is slower, is the mode of Professor Bache." He evidently calls attention to something following, with regard to the progress of the survey, or its mode of prosecution, but having no "documents available," suddenly

leaves the subject without further comment. He then defines the qualifications which ought to be found in a superintendent of the work: "He should be a man of science abstracted from secular affairs, *surrounding himself with instruments and apparatus upon which the unlearned look with wonder always, sometimes with awe.*" This seems to be the writer's opinion of Mr. Hassler; for he says, "See who now sits in the chair of Hassler!" The present Superintendent is not only an astronomer, but he has a staff, says the writer, and he proceeds to enumerate from his "gleanings," as a great secret, the number of assistants and aids of the Coast Survey, giving their salaries. The number is thirty-seven; and the average salary of these officers, taking the writer's own figures, which are quite correct, is *fourteen hundred dollars* per annum; certainly a moderate sum for their services, and for the support of their families.

These officers, except three or four, who are necessarily engaged in the duties of the Coast Survey Office, are now among the swamps and marshes of the coast, or upon the tops of mountains, establishing points of reference; and it is in such places that their time is passed from year to year, dispensing the "patronage" of the Survey. The older assistants have been thus engaged for years, and have risen to their present positions from the humble grade of "aid," with $15 per month and their board. Their salaries are less than any other employees of the government, taken as a class; but they have a pride in their work, and the country has the benefit of their long experience and service. This writer, however, believes that the Superintendent can survey the coast unaided, and without expense; and the "mode" pointed out, is by astronomy. He would convince his readers that, Professor Bache by shutting himself in an observatory, would see the rocks, shoals and reefs beneath the ocean; the bars of rivers; capes and headlands; tides and currents; all pass in review before the object-glass of these "wonderful instruments" and arrange themselves methodically upon his charts.

We will add, for the information of those who may chance to read these papers, that the writer omitted, probably through ignorance, to add to the thirty-seven officers enumerated, two hundred laborers who are usually employed with the field parties. The English employ constantly between two and three thousand persons on their land work alone, while on the United States Coast

Survey, in both the land work and hydrography, taking the officers of the army and navy, and *seamen* of the navy all into account, the number will not reach one-third of the force employed on the English land work; and yet, we have now thirty different parties at work in the field, besides the parties engaged in the laborious duties of computing and arranging and preparing the charts in the Coast Survey office.

At the time Mr. Hassler was asked whether he could finish the coast with his small allowance of $100,000 per annum, in twenty years, the only charts then in use on our coast, were those made by British vessels, and by the enterprizing firm of the Messrs. Blunt, of New York. One of the first recommendations of the present Superintendent, was to enlarge the scale of operations of the survey, so that the work might be in progress simultaneously at different points of the coast; justice to the different sections of the Union required this; the necessities of commercial intercourse required it; and ultimate economy, demanded it. Mr. Hassler contended for a quarter of a century against overwhelming difficulties, and only operated from one centre. It is not surprising that Congress should have become anxious to advance more rapidly. But since Professor Bache was placed in charge of the work, our sea coast has been more than doubled in extent, by the admission of Texas and the acquisition of California; and those parts of the coast now require the heaviest expenditures. Yet, with all this accumulation of labor, what is the comparative cost? The average yearly expenditure has been, during late years, only about $300,000, and the work is in active progress from the eastern boundary of Maine to the northern boundary of our Pacific possessions; and it is estimated from the progress of these late years, that the Atlantic and Gulf coasts will be essentially completed in twelve years more.

The writer, glad to escape from a discussion of the scientific and commercial character of the Coast Survey, flies to the less difficult field of wanton accusation, and suggests the idea that he has already been discomfitted in some fair engagement, and seeks now only revenge on his antagonist. His theme now becomes the "patronage" of the Coast Survey, the public plunder, which he does not hesitate to pronounce the ruling appetite of our statesmen. His readers will be able to judge how much of his state-

ment to believe when they learn that the alleged control of Professor Bache over the Light House Board, and the expenditures under the Light House system, is a *fabrication from beginning to end.* He does not hesitate to make the assertion—for which no public documents will give the slightest grounds—that Professor Bache controls expenditures under the Light House system, to the amount of two millions of dollars yearly; and not only that, but all the appointments. The writer of these remarks has official authority for the statement that this assertion is entirely untrue—that Professor Bache does not control a *dollar of expenditure*, or a *single appointment* under the whole Light House System. The Secretary of the Treasury, who is the President of that Board, is not in the habit of thus delegating his responsible duties and neglecting his sacred obligations. An efficient Light House system must, of course, be based on an accurate survey of the coast, and were it not for the Coast Survey, extended surveys must have been made, for the sole purpose of locating Light Houses. The Superintendent of the Coast Survey is required to furnish charts and surveys, without any *additional allowance of means for that purpose*, whenever called upon by the Board. In other respects his duties are the same as those of any other member. The most laborious duties fall upon the two Secretaries, who are officers of the army and navy.

This writer states that Professor Bache and his *kinsman*, the Hon. James A. Pearce of Maryland, control the expenditures of the Smithsonian. Professor Bache is not a kinsman of the Senator from Maryland. The reckless manner in which unworthy motives and evil designs are attributed to all who have taken a patriotic interest in these great institutions of our country, is apparent in this allusion to one of the first statesmen of the country.

With the American Nautical Almanac Professor Bache is in no way connected. That enterprise was sustained in Congress principally through the exertions of the late John Quincy Adams, and is no doubt doing good service to the country.

As Superintendent of Weights and Measures, the duties of Professor Bache consist in distributing the weights and measures, ordered by Congress, to the different States and Territories of our Union. If the writer means to intimate that the Governors of the different States feel patronized by the Superintendent of the Coast Survey to this extent, he speaks foolishly.

For all these extra duties, and they are very laborious, Professor Bache gets nothing. He is not the first graduate of West Point who has felt it a pleasure and an honor to serve his country in every way in his power, from higher motives than those which this anonymous writer attributes to him. The writer intimates, however, that these extra duties prevent The Superintendent from working in the field, in which respect he has fallen behind his predecessor. The assertion will be cheerfully sustained by all the assistants of the work, that in the laborious duties of the field, Professor Bache bears his full part, and even sets an example of industry and activity to those under him. His extensive administration duties and scientific researches are carried on at his field stations, and yet he has found time to execute, personally, the primary triangulation from Rhode Island to the eastern boundary of Maine, which covers an area of 13,000 square miles; to measure six primary base lines, collectively thirty-three miles in length; to occupy ten or twelve primary astronomical stations in Section I., and several astronomical and triangulation stations between the Chesapeake Bay and Washington; to determine the latitude and longitude of a point near Petersburg, Virginia, another near Wilmington, North Carolina, and the chronometric longitude of Fernandina, Florida, and has occupied over a dozen magnetic stations in Section I., and half that number in Section III., and regularly inspects all the operations of the Atlantic Coast. His patronage in the disbursement of the small annual appropriation for the Survey amounts to this: The programme of work for each year is made out at the beginning of the year, and submitted to the Honorable the Secretary of the Treasury for his approval. In this programme, the work of each assistant is laid out in such a way as to cause the whole work to progress most advantageously. After receiving the approval of the Secretary, with such modifications as he may wish to make, this programme is printed and distributed to the assistants, as "Directions" for the ensuing year.

These directions are strictly followed, and the assistants proceed to execute the work assigned them, having authority to draw from the Disbursing Agent of the Survey, in small installments, as their work progresses, the amounts allowed them. For the sums placed in their hands, they must account, not only by proper vouchers for the expenditures, but in work accomplished. The

vouchers are submitted to the Honorable Secretary of the Treasury for his approval or disapproval, and the work transmitted to the office for examination. The Superintendent is thus responsible for the proper expenditure of the funds, and the amount and accuracy of the work, but his "patronage" amounts to nothing. Even in appointments he has no power, as all appointments are made by the Honorable Secretary of the Treasury, and most of the older assistants now on the work were engaged under Mr. Hassler. The younger officers commence with the small allowance of $15 per month and their board, and work their way up to the grade of assistant by long and meritorious service. The whole number of all grades is now only thirty-seven. The "patronage" of the Superintendent is thus nothing, because he is obliged to follow strictly the laws of Congress and the regulations of the Treasury Department.

Having failed in his efforts to make out charges of enormous patronage against the Superintendent, our disinterested correspondent again tunes his "harp of a thousand strings," and now invokes several distinguished Senators to aid him in his design of dragging down Professor Bache. Copious quotations from the speeches of the late Thomas H. Benton, in the United States Senate, are introduced. In this case he shrewdly makes his selection, and then wisely shuts his book, as he comes to the announcement, that after all the efforts of Mr. Benton to change the organization of the Coast Survey, that Senator gained *but one vote*, besides his own, in a *full Senate*, and when he was returned to the House, virtually abandoned his position.

Senator Mallory is also mentioned by this writer as an opponent of the Coast Survey. During the last session of Congress that distinguished Senator in the course of a debate on the Coast Survey, in open session, made the following remarks:

"The honorable Senator from —— has not, I presume, given that attention to the Coast Survey that he has to the general business of the senate; perhaps the senator never thought of the fact that to constitute a corps of men for the Coast Survey you have to select one in a hundred thousand. In the first place it takes an education peculiar for the service, and great practical experience. If there were no other work during the last year to demonstrate the efficiency and value of this corps, I could point to the Harbor of Charleston alone."

"We owe it to civilized communities to furnish them with charts. Our self respect will not allow us to remain idle and let the dangers of our coast be unknown to navigators who approach them."

This ingenious writer is very unfortunate in not having his "documents available." He seems in fact to have left them behind. His egregious blunder in referring to the senator from Florida betrays his ignorance of the subjects which he attempts to discuss; and we may add another quotation from Senator Mallory's speech, which will answer the writer's statement that the Western States have no interest in the Coast Survey, and, "do not feel its benefits." Senator Mallory says: "The State of Illinois is immediately interested in the Coast Survey. Every bag of wheat she produces is enhanced or lessened in value by all the expenses which grow immediately, or are decreased, by the Coast Survey. They are enhanced by all the expenditures of shipment, by pilotage, by insurance, and by many other expenditures which the Coast Survey is intended immediately to decrease."

Not having exhausted his store of accusations, the writer sneers at Prof. Bache for not hazarding the success of this great national work by mingling with party politics. He directs his attacks upon every possible point, and to compass his end, even a political convulsion which would destroy the Coast Survey, would be a happy consummation of his hopes. The widow's tears might flow and the orphan call upon the sea to give up its dead, but there would be one who would shout in exultation; not because he has objected to the Coast Survey, but because his country's loss would be a gratification of his revenge.

He finally resolves upon one more effort and aims a shot at the army; because, probably, Prof. Bache is a graduate of West Point. "Our noble spirited volunteers should not again be sent into the field under the command of officers who dig ditches on the wrong side of embankments, and the Mexican war, as well as the recent embroilment with Utah demonstrates that we need no standing army." What this idea has to do with the mode of prosecution of the Coast Survey, which the writer set out to discuss, is not exactly understood.

In nothing does he seem to be so successful as in originating accusations and abusive epithets. "The assistants of the Coast

Survey," says he, "have become the scourge of men of science in this country and the scorn of the same class everywhere. Tyrannical, contemptuous, and unjust at home, they are insolent and supercilious to the brotherhood of science abroad: The courtesies of the country are declined and its territory avoided by the most distinguished astronomers of the Old World, because their science has such representatives here. Known and derided under the apposite name of the mutual admiration society, such is the power of the Coast Survey that the capabilities of mischief of so mean a society as the American Association for the Advancement of Science are kept unimpaired and under universal contempt and disgust."

The writer of this review of the anonymous letters in which the above chaste and beautiful language is found, sincerely regrets that it has been necessary to characterize those letters as malicious, wicked, and rancorous: but there has been no wish or attempt to recriminate: public taste and delicacy have been sufficiently outraged by this low mode of warfare, and by these accumulated attacks upon Professor Bache, which, though anonymous, are yet known to originate from a single source, and though dictated by personal animosity, are made conspicuous and of public importance, only by being combined with attacks upon our Coast Survey and other public institutions. It is thus that this Iago seeks to accomplish his unworthy ends; his victims are his country and his country's honor; his enemy—a friend of both; and although the acknowledgment is a compliment to his ingenuity, yet it cannot be said that his attacks are not injurious. Who is beyond the reach of a slanderous tongue! and what public officer living can say that there will be no sympathetic response to any false accusation which human ingenuity can bring against himself. But the poison of an insect may harm though it cannot kill, and these attacks though venomous will neither destroy the Coast Survey nor ruin its Superintendent. There is a voice mightier than that of one anonymous writer, which must be heard; and we shall see who will be sustained by the judgment of the world, Professor Bache or his traducer.

One who has examined

PUBLIC DOCUMENTS.

preservation o book from dust, and the convenience of turning the leaves—that is at the t It is well here to enter a protest against the indiscriminate use of the antique of binding, with dark-brown calf, bevelled boards, and red edges. This is well in its place; but it should be confined to prose works of authors who w not later than one hundred and fifty years ago. What propriety is there putting Scott, or Irving, or Dickens, or Longfellow, in such a dress?

A better stration of the remarks could not be produced than is to be found in the se of books exhibited by Mr. William Matthews, New-York. In this case specimens of almost every style of binding, in its highest perfection, a most correct adaptation. A set of Pickering's edition of Milton, bound in li olive morocco, of a rich and sober, yet delicate tint, is remarkable for the squarer and firmness of its boards, the compactness of its leaves, the freedom with whic opens, the sharpness and perfect accuracy of the tooling, and its distinct an even lettering; in the last respect it is unequalled, and in most of the others uns assed by the finest specimens we have seen of the best binders of London a Paris. Various sets of books, and single volumes in calf and morocco in this ca claim the unqualified admiration of the experienced eye both for their forwardi and finishing.

But principal specimen from the establishment of Mr. Matthews, is a copy of wen Jones's Alhambra, of which we have given an engraving. This book is large folio, filled with plates of the gorgeous Moorish decorations of the famous ilding, the name of which it bears. Its contents made it appropriate for th inder to give full scope to his fancy in the design for its exterior; and the result a work of art of superb richness and irreproachable taste. The external design foliated arabesque; graceful, though grotesque, and not overloaded, thou rich in ornament and gilding. The peculiar effect has evidently been pro- in this way. The book was first completely covered with pale Russia r, and over this was laid blue morocco, out of which the design was cut, so that a figure appears light upon a dark ground; in fact, it is an *intaglio* in leather. the Russia and morocco, though rich, needed life and fire to suit perfectly the racter of the plates which give the volume its character, the principal outlines the design are followed with a narrow strip of crimson morocco, and upon this aid the gilt tooling, which is composed of very small circles, semicircles, dots, d lines, each one requiring one or two impressions of the tool. The effect is lendid, and the workmanship is exquisitely nice and accurate.

The inside of the cover is elaborately ornamented in a similar style, but with different design. The forms here are not foliated, but are the results of the intersection of complicated semicircular lines. The colors and the tooling are the ame as those upon the outside of the cover. In the middle is a panel in vellum, upon which is laid down a lozenge pattern in straw-colored morocco, richly gilt. The fly leaf is backed with straw-colored watered silk. The hinge is, of course, of Russia leather.

This superb volume is exhibited as a specimen of finishing; and it is deserving of particular attention that its beauty is entirely the fruit of the binder's taste and skill. Leather and gold leaf are the only materials used in the production of its splendid dress, which owes nothing to the painter and the jeweller. This is as it should be. *Suum cuique.* Let not arts be mingled. The binder who seeks the painter's aid confesses the poverty of his invention, or the inadequacy of his art. Money enough can be expended upon binding to make the outside worthy of the inside of the most precious volume, and to satisfy the profuse disposition of the lavish. The binding of this volume cost its tasteful and enterprising exhibitor $500.

Among the other books exhibited, the account books from Messrs. Root & Tappan's seem most worthy of notice. Their strength, elegance, and pliability make them models in this style of binding. There are several other cases containing bound account books, the forwarding of which is perhaps equal to that upon those of which we have spoken; but they are deformed by the splendor of inlaid vellum, and morocco gilded; thus violating the law of fitness, which we must consider as one of the first to be regarded in bookbinding, as in all other arts. Gilding and prismatic colors are out of place in the counting-room.

THE UNITED STATES COAST SURVEY.

THERE is nothing in the American department of the Exhibition, which is a more just and honorable exponent of the progress of the United States in some of the higher and more difficult departments of human knowledge, than the display of the means and results of the Coast Survey. It consists of various instruments of research, theodolites and astronomical instruments, compensating bars for the measurement of base lines, instruments for verification, a tide register, a thermometer for taking the temperature of the deepest soundings, the standards of weight and measure, and of the results of field researches, comprised in numerous engraved copperplates and electrotype copies of them, and the printed charts. These mute witnesses speak, in language clear and distinct to the instructed mind, the progress and power of science. They have all borne their part in carrying this great work forward to its present honorable position—a position which has done much to make the name of America honored over the whole world.

The present Superintendent of the survey is ALEXANDER DALLAS BACHE. His position is at once the most honorable which a scientific man can reach in the United States, and also the most laborious and responsible. The constantly increasing confidence and esteem which Mr. Bache has won from successive administrations at Washington, as well as from the people at large, and especially from the distinguished United States' officers, and the civilians employed in this service, bear the most gratifying testimony to his remarkable scientific and administrative abilities. We propose to describe some of the most interesting of the instruments and processes of the survey. A condensed statement of the history and objects of the survey will be an appropriate introduction to these notices, and for this we are chiefly indebted, by permission of its distinguished author, to a memoir by Capt. Charles H. Davis, U. S. N.

It was to be expected that a people devoted to the pursuits of commerce, and depending, in some degree, on the sea as a means of communication between distant parts of the national terrritory, should demand, at an early period of their history, a competent survey of their coasts and inland waters.

But a short time previous to the separation of the Colonies, charts had been constructed of the shores and harbors of North America, under the direction of F. W. Des Barres, his Majesty's Surveyor-General for the Colonies. The progress of his labors was interrupted by the Revolution. The surveys made under the personal superintendence of Des Barres still bear testimony to his skill and fidelity, and present a generally correct view of those parts of New England and the British possessions, whose rocky shores are but little liable to change. They continue to form the principal basis of the charts of the northeastern coast of this continent. In the Southern and Middle States, however, they have been rendered worse than useless, by the inconstant character of the bottoms, and the unequal merit of the originals. The surveys of Des Barres, covering a vast extent of coast, were originally deficient in minuteness of detail, and in hydrographical information; and these defects have been increased by the rapid and extensive changes in the direction, means, and wants of navigation caused by the growth of the country.

The project of a complete survey, conducted upon a uniform system, and extending over the whole coast, was first proposed by the late Professor Patterson, in 1806. It combined three objects, the astronomical determination of prominent points, a triangulation to connect those points, and a hydrographic survey based upon this triangulation. Mr. Gallatin, then Secretary of the Treasury, encouraged the project, and obtained in writing the opinions of learned men as to the best mode of executing it. He selected the plan of operations recommended by Mr. Hassler, the first Superintendent of the Coast Survey. This gentleman, a native of Switzerland, had been employed in the triangulation of the Canton of Berne, and had studied the science of geodesy under the most distinguished masters. It was exceedingly fortunate that his presence and advice here secured the early adoption of the only method of conducting a comprehensive trigonometrical survey that science approves,—the only one of which the results have a certain and permanent value.

It is only, however, since the year 1832 that the survey of the coast has been in steady and active operation. During this long interval of neglect on the part of the government, the coasting trade and foreign commerce of the country have been chiefly indebted to the indefatigable labors of those distinguished hydrographers, the Messrs. Blunt of New-York, for the means of safe navigation.

The history of the fortunes, or rather misfortunes of the survey, during the preceding twenty-five years, may be recited in a few words. A law authorizing a survey of the coast was passed in 1807, but nothing was done under the law until 1811, when Mr. Hassler was sent to Europe to procure the instruments specified in his plan. They had all to be constructed. The war of 1812, and the failure of remittances, prevented Mr. Hassler's return before 1816, and in August of that year he was appointed to the office of Superintendent. In 1818, Mr. Hassler's connection with the work was broken off, by the repeal of that part of the law of 1807 which authorized the employment of citizens. During the ten years that followed, the coast survey seems to have been forgotten by the public and by Congress. In 1827, Mr. Southard, the Secretary of the Navy, a name never to be mentioned without an expression of the high respect which ability, patriotism, and long, faithful and valuable services must always command in the republic, took occasion in his annual report to say, that perfect surveys and charts of our harbors could not be made without the aid of the means contemplated by the act of 1807, and in February, 1828, the House directed the Committee on Naval Affairs to inquire into the expediency of carrying into effect the provisions of that act. Finally, in 1832, the act of 1807 was revised, and an appropriation made for carrying it into execution, and since that period regular annual appropriations have been made, varying in amount, but generally such as have been called for by the estimates of the Superintendent.

In 1848, there was added to the appropriation a proviso, stipulating that a board, consisting of scientific persons in the service of the Government, should be empowered to reorganize the work; and the plan presented by them, when ap-

proved by the President, was to be, and is now, the law regulating the operations of the survey. The scientific methods pursued by Mr. Hassler were continued, and it was directed that the topography should be carried so far inland as might be necessary for a proper delineation of the shore, and for purposes either of commerce or defence.

It is now understood that the aim of the coast survey is to furnish, with the utmost attainable accuracy, and in a connected and uniform manner, all the geographical, topographical, and hydrographical data that can be made in any way useful to the navigation and defence of the coast. And it is also supposed, that, in collecting these data, information will be accumulated that may become serviceable in suggesting and directing local and general improvements, such as the placing and constructing of light-houses, beacons, buoys, &c., the means of improving channels, the effect of contemplated obstructions upon harbors and tidal deposits, the suitableness of a submerged soil for building, &c. And, lastly, it is presumed that those States through which the survey passes will, sooner or later, avail themselves of the base it is able to supply, to form a correct geographical map of their own territory, under circumstances very favorable to economy and accuracy. These are the practical benefits, either direct or incidental, conferred by the coast survey.

In abstract science it has also its mission, equally useful and distinguished. It is to contribute a part of the means by which the irregularly elliptical form of the earth may be satisfactorily determined, the variations in local gravitation, their causes, and thence the internal structure of the earth, be made known, and the phenomena of terrestrial magnetism be explained. It will illustrate the astronomical problem of the tides. Its numerous meteorological records will also contribute to a better knowledge of the climates of the United States, and of the nature and action of meteoric storms, and thus be of service to the farmer as well as to the navigator.

The science of geodetics prescribes the principles upon which a survey of an extended region should be conducted. In the ordinary operatons of land-surveying, the surveyor is permitted to regard his field of work as a plane surface: but the engineer who is to construct a map of a whole country, or of a long line of continuous sea-coast, must take into consideration the spheroida figure of the earth, and present an exact delineation of that part of the spherod upon which he is employed. This necessity controls the processes used in computation, and the plan of projection upon which the detailed results are given, whether it be called a map or chart. Both the projection and the formulæ for computation involve the higher mathematics, and require an acquaintance with the most advanced state of the mathematico-physical sciences.

The system of projection introduced by Mr. Hassler originated with Flamsteed. It is the development of a part of the earth's surface upon a cone, either a tangent to a certain latitude, or cutting two given parallels and two meridians equidistant from the middle meridian, and extended on both sides of the meridian and in latitude only so far as to admit of no deviation from the real magnitudes, such as would be sensible in the detail surveys. In this method of reducing the curved surface of the earth to a plane, the radii of curvature of the parallels and meridians, depending upon the value given to the expression for the ellipticity, and the assumed form of the globe, are important terms. For practical use, tables have been computed in the office of the coast survey, showing the length in metres of every minute and second of the arcs of the meridians and parallels comprehended in the maps. It has been found necessary to recalculate these tables since 1844, on account of the new value of the ellipticity announced by Bessel, and adopted by the present Superintendent.

The practical operations of the coast survey are classed under the general heads of triangulation, astronomical and magnetic observations, topography, and hydrography. The fundamental basis of the survey is a net-work of great triangles, the sides of which, varying from ten to sixty miles, are the longest that the limits of vision or the nature of the country will allow, and hence a mountainous region is much the most favorable for a first or *primary triangulation*. The starting line, or first side of the first triangle, called the *base line*, is measured by mechanical means, and this is a labor demanding, as much as any other in the survey, accuracy, a philosophical regard to minute details, and long previous preparation. Observing, in passing, that several kinds of measuring-rods have been heretofore used, as wood and glass, and that the apparatus of Mr. Hassler consisted of an assemblage of four iron bars, each of them two metres in length, with which he obtained excellent results, it will, perhaps, best serve to convey an idea of the difficulty of measuring a base-line, if some account be given of Professor Bache's base-apparatus.

The measuring-bars are upon the compensating system, first used by Colonel Colby in Great Britain, and by Mr. Borden in the trigonometrical survey in the State of Massachusetts; but a principle not before applied was introduced in reference to the dimensions of the bars, which is thus stated. Bars of brass and iron (the materials employed), of the same dimensions, will not, owing to their different conducting powers and specific heats, heat equally in equal times, and therefore, during changes of temperature, the system ceases to be compensating. This Mr. Bache corrected by giving a coating to the bars that made them absorb equally, and by proportioning the sections to each other, so th[illegible] th one being the same temperature during variable temperatures of the at[illegible] ere these two to do this satisfactorily, it was necessary to make direct e[illegible] ent the spiral materials of the bars themselves, after having first arranged [illegible] apron, at the by means of the numbers taken from the books. The contact [illegible] een r in Bre- bars is made by a blunt knife-edge and a plane of agate, and a [illegible] r ot vel case, the ends of the bars is corrected by a level so delicate, that seve[illegible] of it for mag- make up a quantity entirely insignificant in the measurement. [illegible] bar ven by a ered with a double conical case of tin, to keep the fluctuations o[illegible] te it gives within moderate limits, and the bases on which they are suppo[illegible] d ar tube, to with several thicknesses of imperfectly conducting material, for th[illegible] me is tube The length of the apparatus is compared, before and after final mea[illegible] emd, and a standard iron bar that had been compared by the coast-survey [illegible] e b n to a of Mr. Saxton's reflecting pyrometer. By this instrument, a cha[illegible] of being hundred thousandth part of an inch in the length of the stand[illegible] ba hand, ceptible.

To the preceding description it should be added, that the bars [illegible] and gul num size by the relative specific heats of the two metals) were heated ab[illegible] tl em- sible temperature to which they could be exposed in use, in order to [illegible] e t set. This precaution was at first overlooked in the compensation bas[illegible] in of the British ordnance survey, and it was afterwards found necessary [illegible] ely it. Those who are at all familiar with the subject will perceive that [illegible] y. Bache's application of the lever of contact and level (first used by Bessel, [illegible] ti ards of measure) has not only greatly increased the delicacy of the in[illegible] m and lessened its complexity, but also removed several sources of error. B[illegible] ti contact, and the employment of a microscopic apparatus to determine [illegible] di tance between the compensation points, the measures are repeated in two [illegible] de terms, each having its peculiar standard. Such was the case in the Briti[illegible] a Indian surveys, and Colonel Everest complains of the consequent liability to [illegible] ere and the burdensome accumulation of petty corrections. The remeasurement of [illegible] base of seven and a half miles, in India, differed only 2.4 inches from the first lengt[illegible] In a base of seven miles, Professor Bache found that the same difference might b[illegible] about 0.5 inch, if all the errors were supposed to fall on the same side, which i[illegible] most improbable. The probable error in remeasuring one hundred and twelv[illegible] yards was less than five thousandths of an inch, and the actual resulting error i[illegible] remeasuring one-third of a mile was nothing.

This may appear like refining too much, but it must be known that the lines measured by the same bar in winter and summer might differ materially in nominal length. This difference in the original base of the coast survey might be about twenty feet, and, at a rough estimate, an error of twenty feet in this place would amount in one of the large triangles, of which the sides are between fifty and sixty miles, to about one tenth of a mile.

The source of error and its correction being recognized, there is no other limit to accuracy than the possible.

We return now to the great triangles of the survey, which, as has been said, form its fundamental basis. The points of the pri[illegible] lation are selected with scrupulous regard to all those conditions whic[illegible] in the technical acceptation, good. Scattered at distant inter[illegible] work, they are certain guides by which the more detailed [illegible] controlled. Within them the space is subdivided into sma[illegible] ing the *secondary* and *tertiary triangulations*. They bring dow[illegible] minute details of topography and hydrography, and these subsidiary [illegible] and details, circumscribed as they are by the primary points, are restra[illegible] corrected by them in their deviations. As an additional explanation of the necessity for this first net of great triangles, it may be well to inform the general reader that there is no instrument, however delicate in construction, that is not liable to very small errors, which the most studious attention to every disturbing influence, whether mechanical or meteorological, cannot altogether remove. Now this primary triangulation, which in a mountainous region spans the surface with giant strides, has fewer of these unaccountable errors, simply because it has fewer triangles. It is hardly necessary to add, that better instruments also are used in it. The two and a half feet theodolite, made by Simms (after Troughton's death), under Mr. Hassler's supervision, and used by him and by Professor Bache in the primary triangulation, is still regarded in this country and in Europe as a masterpiece of invention and mechanism. It reads to seconds.

Magnetic and astronomical observations accompany the primary triangulation. The latter are for latitude, longitude, and azimuth, or angular direction from the meridian.

Following the secondary triangulation in order comes the *Topography*, the duty of which is to delineate faithfully the features of the ground. It exhibits the height and contour of elevations, the shape and extent of plains, the courses of streams, all the constructions of man, and the waving and indented outline of the shores. It distinguishes the tilled land from the pasturage, and the grove from the orchard, and designates the character of the woodland. It speaks a universal language, and observes strict fidelity to nature.

Depending upon the secondary triangulation and the topography for its means

of progre follows the *Hydrography.* In this term is included all that concerns local navtion, as the depths and character of the bottom, the direction and strength the currents, the ebb and flow of the tides, and the information, coming ner the head of sailing directions and nautical instruction, which make up the vable knowledge of the local or general pilot. This branch enjoys the honor of nouncing the nautical discoveries of the coast survey, which, though resulting om the combined operations of all, are yet brought out by its means.

In th preceding pages the plan of the survey is presented, and the general distribut of its labors is stated; it remains now to speak of the execution of the varis details, and of the benefits that have been conferred by the coast survey on science, and upon the local and general commerce of the country and of the vrld. In doing this it will be most convenient to keep to its actual state at this ay.

On he death of Mr. Hassler, in 1843, the appointment of his successor was regard with deep interest by the scientific men of the country. The office of Superintendent of the Coast Survey is recognized as one of the central positions of American science, and the incumbent is expected not only to be able to fulfil its prscribed duties, but to be qualified to direct his powers to the advancement of knowledge in every department of the work. How far the present Superintendent, Professor Bache, is suited to answer these expectations, to sustain the national reputation, and to promote the cause of science, may be estimated from the fact, that his appointment was solicited by gentlemen in all parts of the country, engaged in the pursuits of learning. He was educated at West Point, and since his graduation there, followed a course of physical science that has made him well kown in this country and in Europe. It is but justice to Professor Bache to say, that there is no branch of the work into which he has not been able to introduce improvements, either owing to the discoveries of the day, as in the use of the magnetic telegraph for meridian differences, or owing (still oftener) to his own great and eminent scientific attainments. This must appear in the course of these remarks, but it is quite as creditable to his administration to state, as may be done with strict accuracy, that the amount of results now obtained is double that under the former plan, for an increase of fifty per cent. in the cost.

Accompanying the primary triangulation, as an essential part of it, are the *astronomical* and *magnetic observations.* The determinations of the latitude (as well as of the azimuths) are frequent. About fifty latitude stations, and from thirty-five to forty azimuth stations, have been already occupied in the survey. A comparison of the latitudes deduced geodetically from a central point with astronomical determinations, led the Superintendent, in 1844, to the discovery of certain variations in the level, which could only be attributed to changes in form and density of the material composing the earth's crust. These variations are *similar* to those caused by the proximity of mountains; but whilst the latter have been well understood, the former had escaped notice. The numerous determinations of this element will therefore occupy an important place in the future discussions of the general form and internal structure of the earth. A similar discovery has since been made in the ordnance survey of Ireland by Major-General Colby, and appears to have been anticipated by Laplace in the opinion given by him in the Chamber of Peers, in 1817, upon the topographical map of France:—"*If the latitudes of the extreme points (of certain lines) and of several intermediate points are observed, and the length of the seconds pendulum corresponding to these points measured, a great deal of light will be thrown upon the figure of the earth, and upon the irregularities of its degrees and of gravity.*"

Of the *magnetic observations* it will be sufficient to say, as an indication of their character, that they are made with the new instruments invented by Dr. Lloyd and Mr. Weber. The portable declinometer of Mr. Weber (perfected by Lieutenant Riddle, and manipulated according to his instructions) measures inclination, and, by a subsidiary apparatus, the horizontal force, by the method of Gauss. Fox's dip circle, with the use of the deflecting magnet, has given very satisfactory results. By means of these instruments, the *declination, inclination,* and *intensity* (horizontal and total), are determined in a manner that supplies all that is practically necessary, and contributes valuable additions to general magnetic researches.

Longitudes have been determined by occultations, eclipses, moon-culminations, and the frequent transportation of chronometers. Mr. Bond, the director of the observatory at Cambridge, Mass., communicates the meridian differences by chronometers between the British observatories and Boston. Two special chronometer expeditions have been organized between Cambridge and Liverpool.

All determinations of this element are referred to a principal port on the sea-coast, and are connected in the aggregate with differences obtained from Europe by chronometric and astronomical comparisons. The security against error afforded by employing persons to compute, who are disconnected with the duties of the field or the observatory, is well understood. Gentlemen in private life are engaged to repeat the important calculations of the survey, and this system, which enlarges the sphere of labor in a way not less commendable for its economy than for its other advantages, receives universal sanction.

But the discoveries of Professor Henry (Secretary of the Smithsonian Institute), resulting in the invention of the magnetic telegraph, have provided a new and more precise method of arriving at the difference between the times of two places, or their difference of longitude expressed in time. The details of these operations were worked out under the direction of the Superintendent by the late lamented S. C. Walker.

The space circumscribed by the terrestrial angles of the first order, and defined by the celestial observations that accompany them, is subdivided into a minute network of smaller triangles, constituting the *secondary* and *tertiary triangulations,* the points of which embrace and determine headlands, light-houses, beacons, churches, hills, and all conspicuous objects along the coast, that can be made useful in its navigation. They also bring down the work to the details of the topography and hydrography, and supply the bases for these branches of the survey.

It has been already mentioned, that the topography is minutely and exactly descriptive of the ground, both in form and character. The Lehman system of topographical drawing has been adopted, but with such modifications as the nature of this country exacted, in order to preserve the beauty of the maps. The slopes are represented by hachures, the strength and distance apart of which indicate the degree of inclination. In the original maps, the horizontal curves limiting the different slopes are drawn in red ink, as the draughtsman progresses in his sheet.

The scale of the original sheets is $\frac{1}{10000}$, or about $6\frac{2}{3}$ inches English to the mile. Plans are frequently executed in the field, and furnished from the office, when wanted for local improvement, on twice this scale. But the charts designed for navigators are necessarily reduced in dimension. The harbor charts are usually published on the scale of $\frac{1}{20000}$, or about $3\frac{1}{3}$ inches English, and the more general charts on that of $\frac{1}{80000}$, or about three-fourths of an inch to the mile; which last is the scale of the great topographical map of France. In all the maps, the topographical details are faithfully preserved, including height, contour, &c.

To continue the history of the operations of the survey during each year, would require more space than can be allotted to the subject in the RECORD, and we conclude this sketch by a brief relation of its aggregate results up to 1851. Reconnaissance has extended over an area of nearly 37,000 square miles; and the triangulation covers 24,000 square miles. Nearly 1,200 miles of general coast line, and 9,000 miles of actual shore line, including indentations, have been surveyed. About 500 topographic, and 200 hydrographic sheets have been executed, and the soundings made amount to more than two millions and a quarter. Forty-four finished charts, and forty-one preliminary charts and sketches of important localities have been published. Numerous statistical data of this kind may be found in the annual report.

A feature of much interest and importance in the more recent history of the survey, is the addition of two sections on the Pacific coast to its field of active operations. It has not only pushed its parties into all the Atlantic and Gulf sections, but has already made a complete general reconnaissance of our entire Western Coast, and has published, or advanced to a state of forwardness, the maps embodying these results in a form most serviceable to navigation. Its parties have also made detailed surveys of all the principal harbors along this coast, as well as made excellent latitude and longitude determinations. Thus the navigator is already able to thread his way along that newly peopled-shore, with such aids as he still has on portions of our Eastern sea-margins. Special appropriations have been made to urge forward this important work, and it is surely a most sagacious policy to survey accurately and in detail those rapidly developed frontiers of our national domain. A systematic triangulation, and determination of points for a connected topography and hydrography, have already made a good beginning. Its consummation must be the work of from twelve to fifteen years.

The dangerous character of the Florida reef, extending for its entire length along a [illegible] way of commerce, and producing a fearful loss of life and property, has [illegible] successive specific appropriations for its more rapid survey. This work has progressed quite satisfactorily, especially when the difficulty of the locality and the extremely jagged coral sea-bottom are borne in mind. The study of coral characteristics is a highly interesting collateral, and Professor Agassiz, in the annual report of 1851, has given the results of an examination undertaken for the Coast Survey. Lieut. Rodgers' survey of Key West and its vicinity, gives a most interesting picture of a coral bottom, and vividly suggests the importance of submarine blasting to open a better channel into that important harbor. The Florida triangulation is one of peculiar difficulty, owing to the flat and overgrown character of the country, and the distance of the reef.

In conclusion, we state that the rate of progress of the survey points to its completion in about twelve years, though this time might be shortened, if desired, by increasing the appropriations. It is to be hoped that no vacillation of policy in respect to an enterprise so truly national and beneficial, is destined to check its progress or interfere with its present systematic organization,—which, placing it under the Treasury Department, makes it an open field for the employment of both navy and army officers, as well as the civil assistants so indispensable to its organic completeness. It is now well, and the straightforward duty of our Government is to make general appropriations, and practise *laissez faire.*

SAXTON'S METALLIC DEEP-SEA THERMOMETER.

AMONG the many problems of terrestrial physics, which both invite and baffle complete investigation, one of the grandest and most attractive is that presented by Ocean temperatures. To determine the temperatures which characterize the various depths, localities, and seasons throughout the vast expanse of the oceanic realm, is a work of immense labor, but one which cannot fail to give some results of eminent practical and theoretical value. Very little has yet been accomplished towards this almost boundless investigation, but that little has not been without fruit. In conducting the off-shore hydrography of the U. S. Coast Survey, the proximity of the Gulf Stream, and its important bearings on the chief highways of our commerce, have made it specially incumbent on the Coast Survey organization to develop the great physical features of this phenomenon with as much accuracy as possible. The exigency of the work of sounding along the shore has hitherto prevented the application of any great strength to the Gulf Stream problems, but several results of much interest, as to its form, position, movements, and temperatures, have been already reached in more or less detail.

The most casual inspection will show that the Gulf Stream is one of the great oceanic movements, or disturbances of equilibrium, caused by the varying temperatures of its different tracts in the different seasons. Temperature is the prime moving element, which needs to be observed and reasoned upon with all possible care, to give that thorough and true explanation which every one desires, but no one possesses. How to observe the deep-sea temperatures which are thus disturbing the rest of the ocean—how to bring up, from a depth of several miles, a trustworthy reading of the heat which prevails in those unexplored recesses, is a question which demands an answer before the Gulf Stream can be fully comprehended in its fundamental facts.

The proposed investigations are seriously obstructed by the enormous pressures in the regions to be explored, which derange all common contrivances. The ordinary glass thermometers were repeatedly tried in the Coast Survey soundings, but as uniformly broken. Attempts were made to protect them by strong metallic cases, which were also crushed in, as illustrated by an example now exhibited among the contributions of the Coast Survey at the Crystal Palace. Mr. Saxton, the eminently ingenious and successful head of the Instrument Department in the Coast Survey Office, then devised the deep-sea thermometer, which bears his name, and which has been used for several years with entire success. Some accidents, not faults of the instrument, have had the effect to prevent such extensive observations as Mr. Bache had provided for, but it is to be hoped that each year will contribute to the number of our reliable observations with this elegant apparatus. One of these beautiful instruments is on exhibition in the Coast Survey collection at the Crystal Palace; and we proceed to state its principle and the arrangement of its parts.

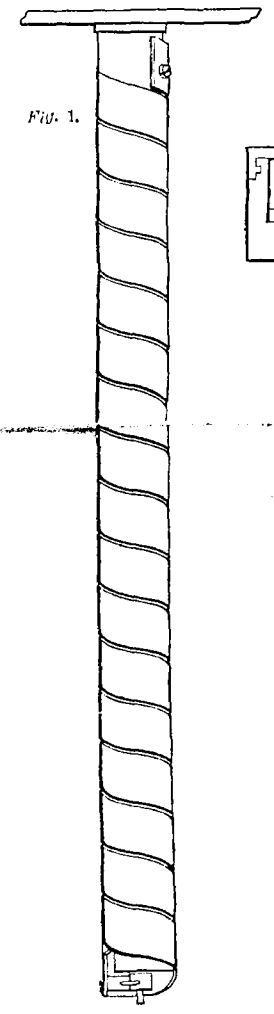

Fig. 1.

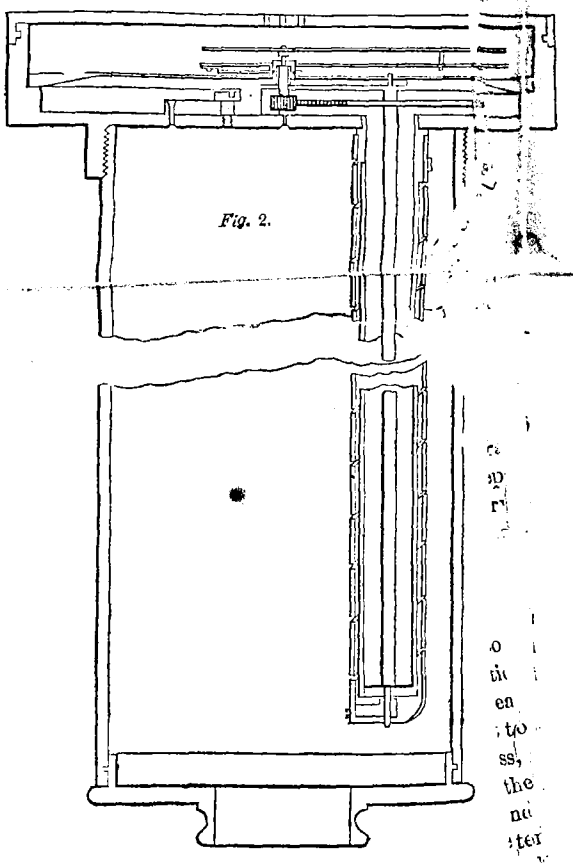

Fig. 2.

The main feature is a compound spiral or helical band or ribbon, consisting of two similar plates firmly united along their surface of contact, the outer being of silver, and the inner one of platinum. As the rates of expansion of these two metals are widely different, the variation of temperature to which the spiral is exposed, will produce a considerable movement of torsion, or rotation, at the bottom of the helix, the top being fixed. This principle is familiar in Breguet's torsion thermometer, and Mr. Saxton has only applied it to a case, with an improved arrangement at the upper extremity of the spiral for magnifying and reading the indication furnished. The motion of rotation, given by a change of temperature, is very well fitted for reading, as by gearing it it gives a quite ample rotation to an index hand. Within the spiral is a hollow tube, to which at the top the spiral is screwed fast, as shown in Fig. 1. Within this tube is a small rod or axle, which is connected with the bottom of the spiral, and turns freely on a supporting pivot, so as to communicate the torsion rotation to a toothed silver wheel on its top, which is shown in Fig. 2: that part only being toothed which will be needed. A small pinion, which bears the index hand, takes up the motion, and is made to traverse the graduated silver rim, and carry with it a stop hand, Fig. 3, which will indicate the maximum or minimum temperatures passed in the descent, according to its arrangement. Surface temperatures are read off at once, and the sounding lines give the depths.

The whole of this arrangement is inclosed in a firm metal case, as shown in Fig. 4, which protects it from injury, and yet permits the water to pass freely around the spiral, causing it instantly to take the temperature of its locality.

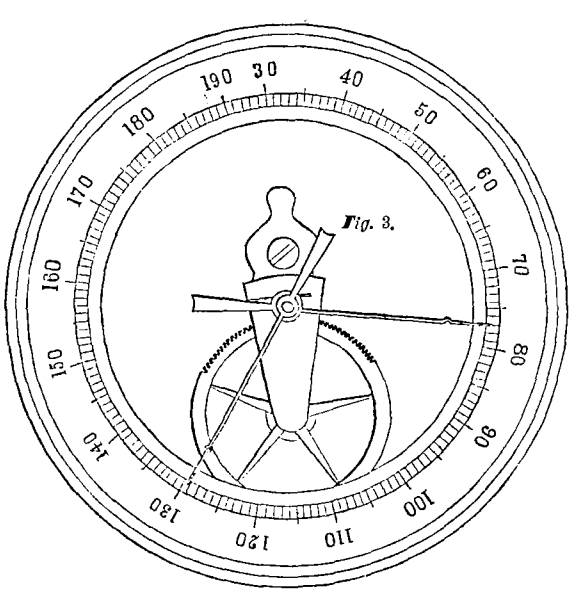

Fig. 3.

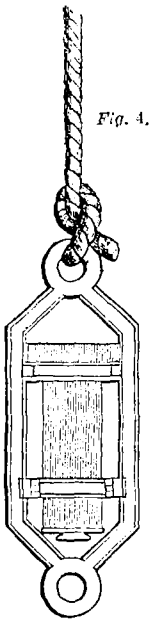

Fig. 4.

The top case is covered with a cap, pierced with small holes to permit the water to pass freely. The whole case is then mounted in a metal frame by means of two rings. The top ring turns on two side pivots, to permit the insertion of the case; but the lower ring is in halves, one of which is fixed, and the other opens out to receive the case, after which it closes, and is tightly clamped. An eye at the top receives the sounding-line, and one at the bottom any requisite sinking weights. All the delicate parts of this thermometer, which could be corroded, are heavily electro-plated with gold, by Mr. Mathiot, in the Coast Survey Electrotype Laboratory, so that they are not liable to injury with fair treatment.

In using this instrument it is thrown from the side of the vessel at successive times, first observing the surface temperature, and then sinking it to a small depth, and again to one a little greater, and so on, till it can be decided that the stop hand indication belongs to the greatest depth attained. The passing of a point of maximum or minimum temperature, however, complicates the problem, and makes it a matter of critical judgment to connect the temperature and depth with accuracy. In the hands of good observers, it yields excellent results, and, though not all that could be desired, is still a most excellent instrument within the range of its capacities. Its cost, made in the limited numbers required in the operations of the Coast Survey, is about sixty dollars, though a demand for considerable numbers would much reduce this amount. We trust that this or some better instrument, if possible, will hereafter be employed with increased zeal in the study, not only of Gulf Stream temperatures, but of the ocean throughout its whole expanse, and even in our lakes and the interior seas of the whole world. Surface temperatures alone are quite insufficient to give correct results, for the solar radiation produces a great effect on the superficial layers, and we must penetrate to one or two hundred feet before we enter on the grand temperature scale. A minimum temperature is usually passed in descending, at that depth where the sun's effects may be assumed to terminate, and we then enter on an increasing scale of temperatures, which, according to one of Prof. Bache's discussions, give, with the co-ordinates of depth, a curve clearly and obviously the logarithmic curve. The connection between this result, and some of the grand results of that

TIDES AND TIDE GAUGES.

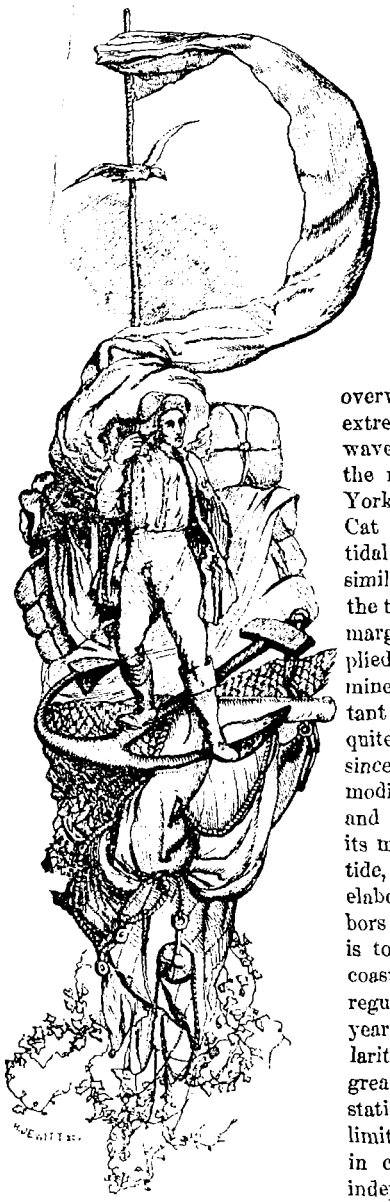

ETERMINATIONS of the phenomena of tides form an important part of the system of operations pursued in conducting the United States Coast Survey. The extensive hydrographic labors requisite to prepare thorougly accurate and reliable charts of our seacoast and harbors, would be exceedingly incomplete, if a careful observation and study of the tides did not make an integral and systematic portion of the plan pursued. Our coast presents a wide diversity of tidal phenomena, from the overwhelming rush of waters at the northern extremity of Maine, to the almost insensible wave at some points of the Gulf Coast; from the regular and obvious periodicity of New-York Bay tides, to the single daily tides of Cat Island, and the imperfectly explained tidal anomalies of our Pacific Coast. So dissimilar are the characteristics and amounts of the tidal wave from point to point along our sea margins, that observations require to be multiplied so as to include not merely a few prominent points along shore, but all the important rivers, roads and harbors. It would be quite unsafe to interpolate tidal characteristics, since each locality produces its own special modifications on the great general tide wave, and requires a particular determination of its mean, greatest and least rise and fall of tide, and of its establishment. But as the most elaborate tidal study cannot be given to all harbors or important localities, the plan pursued is to select some principal points along the coast for permanent tide stations, at which regular observations are made through several years, so as to give in full detail the irregularities, with long intervals, and all the facts, great or small, of the tidal rise and fall. Other stations are occupied with tide gauges for limited periods of one or more lunations, either in connection with the sounding parties or independently, and the tidal characteristics are thence deduced approximately. A set of observations not covering at least one complete lunation, is insufficient for a strictly reliable result, though sounding parties are sometimes, especially in hydrographic reconnaissances, compelled to be content with the observations of a few days, from which the remainder of the tidal cycle is deduced by reduction and discussion, as well as is practicable. Tidal observations must, of course, be regularly made during all sounding operations, and the soundings must [illegible] duced to the standard plane of reference by their aid. The level of [illegible] low[illegible]er as deduced from all the observations made, is the plane of reference which is now generally employed, and to which the soundings made during various periods of the tide are reduced. When it is borne in mind that near two and half millions of soundings have been already made in the Coast Survey, the immense labor of reducing all of these to standard planes, and of deducing these planes themselves, can be partly conceived. A casual inspection of the tide table which will be found on each finished chart, gives but a most inadequate idea of the great amount of observation and discussion, which have yielded their pith in this laconic epitome.

There is a department of tidal discussion of far higher character than the more directly practical operations of deducing a mean low-water plane, and of referring to it the various tide phases, &c., in which the construction of particular tide tables consists. These higher discussions have for their object, the analysis and explanation of the phenomena of tides in different localities, by reference to the general physical theory of tides, and the formulæ derived from it. Not only are the main tidal movements direct consequences of the inequalities of the solar and lunar attractions on the different portions of the oceanic mass, but the local traits of tides are, to a great extent, deducible from the application of the general theory to specific cases. Prof. Bache has applied himself with eminent success to this class of discussions, and from the seemingly anomalous cases of single-day tides at Cat Island and Mobile Point in the Gulf of Mexico, and of irregular recurrences at Key West, he has derived a striking confirmation of the physical foundation on which both the equilibrium and dynamic theories of tides ultimately rest. By assigning to the several disturbing causes their appropriate amounts of effect, there results, shown in his discussions, a compound or aggregate effect, which coincides closely throughout with the complex variations actually observed. These discussions, as presented through proportional or expository curves, are model in their kind, and exhibit the most advanced condition of tidal interpretation. The physical theory of tides, like all undulatory theories, is full of mathematical difficulty, and demands a good proficiency in analysis even for its comprehension, and still more for its expansion; hence its exposition can never be both [illegible]ugh and popular. To this difficulty inherent in the subject, we may ascribe not infrequent lack of faith in its truth and completeness, observable in those to whom thorough mental discipline has been denied. The complication of physical elements entering the general tide problem, and of local elements belonging to each case of a harbor, make it quite impossible for any but a well trained mathematical and physical reasoner to do justice to a subject so profoundly difficult.

The [illegible]ial method of observing tides is by means of a simple tide gauge. This consists of a long vertical box, sunk to the requisite depth in the water, and so firmly attached to some solid support as not to be moved by waves or other disturbing forces. A copper box float made air tight, and of a size just to play freely in the long box, supports a graduated vertical staff, which rises and falls with the float, so as to be read through an accessible door in the side of the box. Some small holes in the bottom of the box admit the water slowly, so as just to neutralize the effect of waves in causing oscillation of the float and staff. Hourly readings during the day and careful observations at the times of slack water are then regularly made and recorded, notes being also taken of the winds and weather. It will be seen that this method is by no means free from objections. It only gives a small number of readings, leaving the remainder to be interpolated. It involves much [illegible] and watching in proportion to the results attained, and readings are not unfrequently lost or out of time, and even in some cases are not faithfully recorded. It involves many chances of error in the readings and records. The observations near high and low water, the most critical and valuable of all, are peculiarly liable to imperfection as the rate of rise and fall is there so small. For most ordinary purposes, this simple gauge is fully adequate, if read with care and skill. In the refined and long-continued observations requisite for all thorough and elaborate discussions, a continuous and automatic record is highly desirable, if not positively necessary. Every tidal observer has not the minute accuracy and great thoroughness of Gustavus Wurdeman, to whom the survey is so much indebted for his observations on the Gulf Coast.

To supply this purpose, and to afford all the advantages of a continuous and self-producing record, the *Self-Registering Tide Gauge*, of which a specimen (U. S. C., No. 14) is exhibited at the Crystal Palace, was devised and executed by Mr. John Saxton, the head of the Instrumental Department in the Coast Survey Office. This gauge has been fully tested and approved by the experience of about eight months, in different localities with several gauges. Six have been distributed at stations along the Atlantic Coast, and six have been sent under the

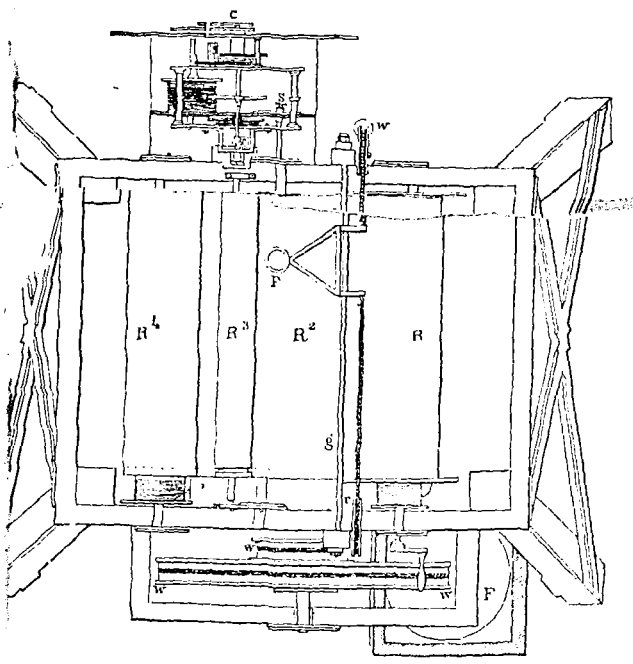

PLAN. SCALE=½.

charge of Lieut. W. P. Trowbridge, United States Corps of Engineers, and Assistant United States Coast Survey, to record the tidal variations at three permanent and removable stations along our Pacific Coast. In general terms, this tide gauge is arranged so as to record by a clock movement, the ordinate of time, by points marked along the length of a running sheet of paper, carried forward by

the clock work, and intended for one month's record. The ordinate of the height is recorded by connecting the recording pencil with a freely moving float, and so gearing down the float motion as to limit the pencil movements to thirty one foot or the width of the sheet. A record curve results from these two movements which presents a perfect picture of the daily tide waves, in a series of maximum

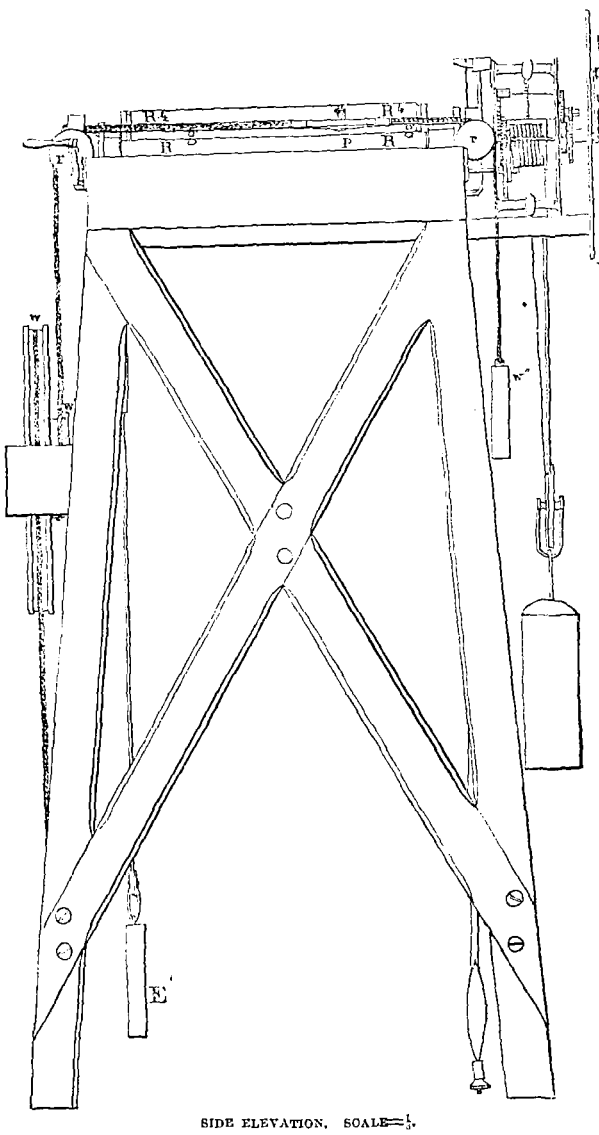

SIDE ELEVATION. SCALE=$\frac{1}{8}$.

and minimum heights. By applying a reading scale, the actual tide height at any moment can be read off with nice accuracy. As we wish to give tourists and exact information, such as might serve for the construction and use of this instrument, we introduce the following description and drawings, with practical directions derived with slight modifications from official sources.

A float (F) rising and falling with the tide, is connected by a chain or wire with a pencil point (p) sliding on a straight guide (g). If a paper be moved beneath the pencil point at a uniform rate, the line will be drawn according to the rate of the tide, and if the paper be marked at regular intervals by the mechanism which impels it, the continuous curved line traced by the pencil will represent the rise and fall of the tide, so that the time and height may be accurately found at any instant. The particulars of the application of this principle are as follows:—The float and wire are protected from the action of the waves and currents by a tube which admits the water freely without allowing oscillation. The float is attached to a fine wire or chain, which connects it with the wheel (w) upon the circumference of which it winds, and another small chain connected from the small pulley (w') on the same shaft, and passing over the friction roller (r) is hooked to the pencil frame. This small pulley reduces the play of the pencil to prevent an inconvenient width of paper, and is regulated by the amount of rise and fall of the tide.

To the other end of the pencil frame is attached a counterpoise (w) passing over a roller in the same manner. This weight causes the pencil to retrograde as the float rises. The recording paper, being then wound compactly and accurately upon the cylinder (R), passes beneath the pencil point and over the impelling cylinder (R²) geared to the hour wheel of a time-keeper. This cylinder has two extremities, and with one foot interval, two circles of twenty-four equidistant conical points to each, arranged on its circumference, and as it revolves once in twelve hours, the points successively pierce and leave the paper at intervals of an hour, at the same time that the paper passes over, and is re-wrapped the cylinder (R⁴). To insure the entrance of the points, a small roller (R³) rests upon the impelling cylinder, and prevents the paper from being lifted. The roller is grooved near the extremities, so that the conical points may not come in contact with the wood. The cylinder (R⁴) is urged forward by the weight E', and the cylinder R is held back by the smaller weight E, so that the paper may constantly be kept well stretched. The excess of the weight E' over E is sufficient to overcome the friction of the system of rollers, so that the clock has merely to regulate time. Upon the axle of the impelling cylinder is a clamp screw (S), by which it may be detached from the clock. To put the machinery in motion, the pencil and one of the conical points being brought accurately in the same vertical line at any exact hour, the cylinder is then fastened to the clock by means of the clamp screw, when, as it moves with the clock, it completes a revolution in twelve hours; the conical points will consequently mark exact hours and half hours, whilst the line traced by the pencil will show the corresponding heights of the tides according to the scale to which the machine is adjusted.

The following points require attention in adjusting this gauge:—I. The counterpoise should be rather more than sufficient to balance the chain or wire, taken as they will be, at lowest tide. The strain upon the pencil is very slight, but when the rise and fall is great, the chain or wire should be as fine as possible, that the counterpoise may not be inconveniently heavy. II. The chain or wire to which the float is attached, should be so adjusted upon the large wheel that the curve of rise and fall will be traced on the paper midway between the lines of dots. One or two days' trial will locate this curve of rise and fall sufficiently well for the chain or wire to be permanently pinned. III. A conical point should be brought accurately in a line with the pencil, and the clock started at an exact hour or half hour. IV. That the gauge may be disturbed as little as possible, at least one full month's supply of paper should be wound upon the receiving cylinder at the beginning of the month.

To guard against accidental disturbances and jars, the structure upon which

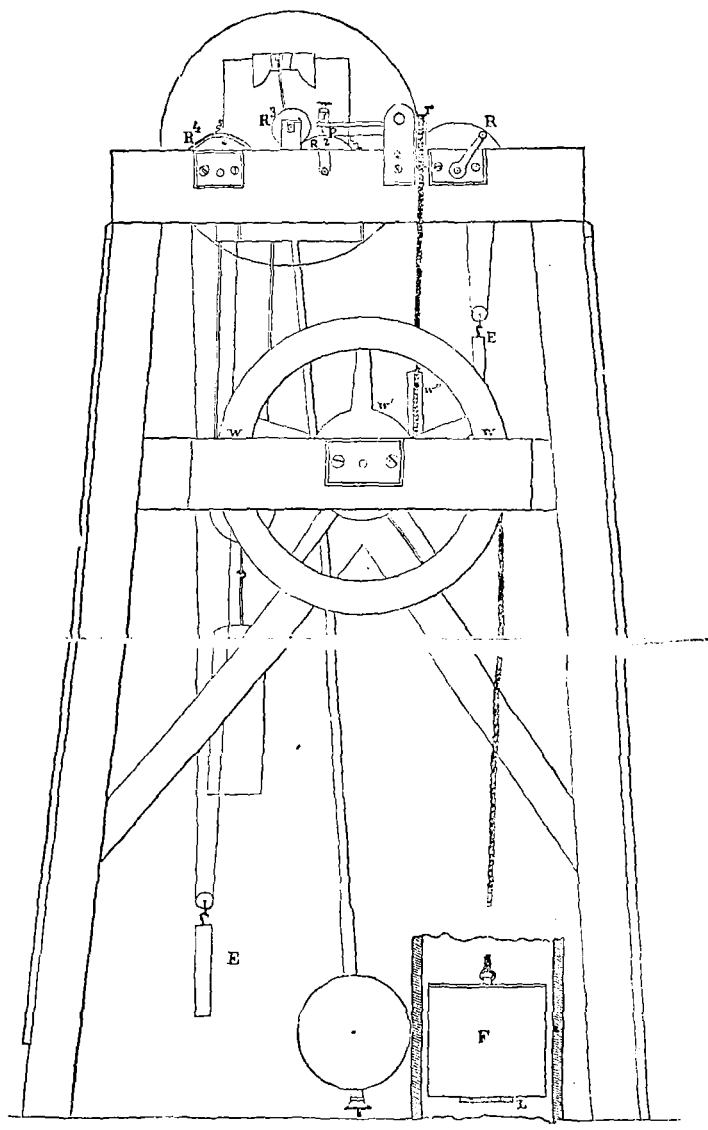

REAR ELEVATION. SCALE=$\frac{1}{8}$.

the gauge is erected should be as firm as possible. The superstructure for protection against the weather and other disturbing causes, need only be large enough to allow free access for attendance on the gauge. The box for containing the float should be water tight, below water, except an adjustable orifice, which may be made by a series of holes about an eighth of an inch in diameter, cov

part by a slide, and it should extend up to the floor on which the gauge rests, that th free action of the float and its connecting wire or chain may not be endangered b obstructions falling into the box. Having so adjusted the wire or chain as to give th midway position on the paper to the record curve, particular care should be taken t prevent its being altered, since any change in its length or points of attachment to th wheel will vary the relation of the record curve to the permanent Zero. All gaug records should be carefully referred to some permanent Zero, or bench mark wel cut into the stone, or reference mass, and this Zero or bench mark should be fully and precisely described in the file of tide records, as also all changes in the mark and in the Zero of the gauge itself, as referred to the mark. A common staff guage should always be erected in connection with a self-registering gauge, and as near by as convenient; it being then simply necessary to obtain by careful levelling, the reading of the bench mark on the staff, when it reads Zero at its own reading level, and then to compare the simultaneous indications of the two gauges, for the starting point of the record curve readings. These gauges should have such positions as to receive the full effect of the tide, and when from freezing or other causes the registering gauge ceases to work, the staff gauge must be used for hourly and high and low water observations in the usual manner. The record sheet should always bear upon it the names of the station and observer, the number and scale of the gauge, the dates of beginning and end of the record, the 12 M. dot of each fifth day clearly dated, and full notes of the time and causes of all breaks in the record, and of all new starts, with the interpolated staff guage readings during the record gaps.

After taking these precautions and getting the instrument well started, each Coast Survey Observer is required to visit his station every day until he is sure all is going right, when it is deemed sufficient for him ordinarily to visit it every other day, observing the following directions. "1. The steel rod to which the recording pencil is attached, should always be kept perfectly clean and free from rust; for this purpose it may be rubbed with oiled cloths every week, care being taken that no oil be left on the rod, or allowed in any way to touch the arms which support the pencil resting upon it. 2. If in consequence of a continuation of storms, the tide should fall so low as to render the counterpoise insufficient to keep the chain well stretched, a small additional weight may be added. When the rise and fall is great, or very much influenced by the winds, this may sometimes be necessary; but as there is little strain upon the pencil, the person locating the gauge should in the first place, make the counterpoise sufficient to embrace all but very extraordinary tides. Proper attention to the two foregoing paragraphs will insure an unobstructed motion of the pencil. 3. The clock should be made to keep mean solar time, being corrected to this effect, whenever it is necessary, by a sun-dial or a meridian mark with the equation of time applied, or by such other means as may be found available. 4. Should the clock become disordered, *it is not desirable for the observer to disturb its mechanism.* Timely notice may always be given to the assistant in charge of the office when any repairs are needed. 5. The clock should never be stopped unless from absolute necessity, or from some unavoidable accident. Whenever it is so stopped, the time and corresponding hour dot upon the paper should be distinctly marked. When it is again set in motion, the first hour dot, together with the corresponding time, should be noted in like manner. 6. The hour dot corresponding to 12 o'clock M., upon the fifth day of every month should be marked. The observer's attention is particularly called to the last two paragraphs. A failure to comply with them will cause much confusion, and must inevitably be detected when the record sheets are sent to the office. 7 The sides of the sheet corresponding to the high and low water should be m[illegible] y, H. W. & L. W., [illegible] 10' [illegible] uth. [illegible] hen it is necessary to change the p[illegible] per at [illegible] ginning of the month, this should be done without stopping the clock, and not near the time of high or low water. The time corresponding to the first hour dot after the paper is changed, should of course be marked. 9. The records sent to the office should bear the observer's name and the number of the gauge. This number, together with the scale, is branded on the instrument. 10. In case the clock stops and cannot at once be started, *observations with the staff gauge* of the time and height of high and low water must be made by the observer, and recorded on the registering sheet, with the date and reason for making the note. 11. When any such difficulty occurs, the observer will in all cases telegraph to the office."

The record sheets are read in the office by the aid of a special table, the sheet eing run between two overlapping guides and under a reading scale fixed transversely. A small transparent scale of radiating lines is used for subdividing the ıalf hours, thus giving the means of very close readings about the high and low vaters.

In reviewing this description, it will be apparent that this instrument requires re and skill on the part of its attendant, but that with these its records must be the most perfect kind. Such is the fact, and numerous record sheets already ve perfect pictures of a month's tides which are very suggestive of the varying ements concurring in their production. Curve records are much easier to interet than numerical readings, for the natural continuity is presented to the eye. e record curves are also much more delicate exhibitors of minute quantities ıple gauge readings. On the whole, the introduction of automatic cannot fail to promote a critical study of tides, besides saving the nere unintelligent watching for the hours.

ering tide gauges have been for some years in successful use at some tide stations, and Mr. Saxton's machine is not original in its general ıowever, exceedingly perfect in its details and nice in its operations, important points of originality, especially in the arrangements for record sheet and for marking the time on it. These reasons well pre-eminence greater than we have given it, a pre-eminence which it will fully vindicate by its prospective share in the work of elucidles of our two ocean borders.

MENT SCHOOLS OF ORNAMENTAL ART IN ENGLAND.

ries whose industrial pursuits have arrived at that point at which they led to supply the necessaries of life, seek in any further development to mental element to that of utility. To do this successfully, art-edu ired, not merely that of the designer or originator of the forms to be but also of the workman, by whose skill it is to be fashioned, and elligence or *ignorance it is to be made or marred*, in regard to the es of art.

y within the last twenty years that attention has been practically the importance of education as applied to art-manufacture in ıin, and institutions founded in which the artisan, as well as the obtain systematic instruction in the principles and practice of art as ıis particular pursuit. Nor has this latter point been sufficiently at ıntil very recently, and perhaps, even now, there is much more to be ıs been imagined. Under the singular misnomer of schools of design,* moters of the institutions whose title has been lately changed to that Ornamental Art, proceeded to take the initiative in a system, which prop[illegible] ried out, was calculated to produce results of the most satisfactory characte[illegible] d even with all the mistakes, blunders, and perversions to which these schools h[illegible] been subjected, has done more than could have been expected.

Con[illegible]d of the importance of such institutions to the future well-being of the manufa[illegible]ng interests of England, as well as the advancement of the people in a higher [illegible] of intelligence, a few earnest men, at the head of whom stood Mr. W. Ewart, [illegible] M. P. for Liverpool, obtained the appointment of a parliamentary committee [illegible] arts and manufactures." This committee sat, and examined witnesses, amongst [illegible]om were men the most eminent in Europe for scientific and artistic attainments [illegible]anufacturing skill, and commercial knowledge. They finally reported in 1836 [illegible] easures for the promotion of artistic education amongst the manufacturing classes [illegible] to be at once taken, and that the government ought to assist by grants of public m[illegible]y and the organization of a central establishment in London. Accordingly the [illegible]vernment School of Design, Somerset House, was founded for the promotion o[illegible] e latter object, and as a model establishment. A council of gentlemen, all of wh[illegible] were eminent either as patrons of art, artists, men of science, or manufacturers, [illegible]s appointed by the Board of Trade, under which the experiment was to be carried out, and a sum of money having been granted, with the free use of the rooms [illegible] the Royal Academy, the new institution commenced its career [illegible] progress was very slow. The title of the institution perplexed [illegible] of-fact people, and it was supposed that none could attend but those who had previously learned drawing; and that its object was to teach those who could draw already, to design. The establishment of a school in Spitalfields, the first branch establishment, did much to make the matter better understood—inasmuch as it took the weaver from his loom, and the youngest boy who assisted him, and proposed to teach them drawing as applied to the silk manufacture, not so much with the expectation of making designers of them, as to make them more intelligent and reliable workmen in the execution of the designs of others. Stimulated by the movement in London, a few leading men at Manchester took up the question, and established a school in that city, not, however, in connection with the government, but as a local experiment. Here the instruction had no reference whatever to industry. It was simply a cheap academy of art in its more general forms of study, and the student was left to apply his knowledge, or blunder in his ignorance as he might, when desiring to apply his art to practical purposes in manufactures. Of course this system failed, and the school at Manchester eventually became one of the government schools subsequently established in the great provincial towns.

[illegible] progress of the school at Somerset House, under Mr. Dyce, appointed

* [illegible]e founders of the English schools took the French title, "*Ecole de Dessin*," and translating it liter[illegible], forgot that in English "design" meant much more than "dessin" in French. By *designing* is rea[illegible] meant *originating*.

director in the place of Mr. Papworth, who was first sele the Board of Trade to sanction a plan for establishing schools in all tl ufacturing towns and districts in England. Scotland had been provi years before by the establishment of the Trustees' School, at Edir institution is supported by an income decreed from the investme property confiscated at the rebellion of 1745, and vested by the En ment in the hands of trustees for "*the promotion and encouragement manufactures in Scotland.*" The school is probably the oldest sch using the latter term in the popular sense, in Europe; but prior to a was made after the movement commenced in England, it had don manufacturing arts, than for the department of fine arts; nor can this since Wilkie, Stanfield, Roberts, Dyce, and many others of the le Britain, received their professional education within its walls. T gentleman, now W. Dyce, Esq., Royal Academician, was for a per professors, and was selected to visit the schools of art in France and report to the government thereon. This report, an admirable docu the basis on which it was proposed to erect the English system. It placed at the head of the schools, and his knowledge of his subject, l and attainments ought to have secured for his plans a fair trial. Su was not the result. Attempts were made, and in many instances su hamper the working of an enlightened system of art-education wi strictions, to suit the narrow views of professional artists on the one l equally mistaken notions of manufacturers on the other. No one that to make the artisan, and especially the designer, really useful to others, it would be a waste of time to keep him down simply to t practice he had to grapple with, and that to do a thing thoroughly we power to do much more than the immediate work is necessary. If p be made beyond a given point, this becomes pre-eminently imperative.

A parliamentary grant of about £5,000 per annum having been ma with a grant of £10,000, to purchase examples of art for the use of those cities and towns the inhabitants of which desired the establishmen applied to the council in London. If the place was of sufficient imp seat of manufactures, and the inhabitants, or the committee or corpo for them, guaranteed to raise, by subscription, a sum per annum the amount of the government grant, which the estimated cost of the sc med to indicate as desirable, the latter grant was made for three years n experiment, and in no instance has it been subsequently withdrawn. On t contrary, the grants have been increased in the case of the larger and mo important towns to three times the original sum, while in too many instanc the local support has not been equal to the sums raised at the commencement. This provision of pecuniary means, however, did not meet the whole questi In the midst of so many artists, there were very few competent to underta the management of the schools, who were also willing to submit to the drudg and toil, and too frequently uncertain results. Art, as applied to manufactur ad to be made popular, not only with the public, but with the artist. Every ma who could paint a picture, or model a statue, considered it "*infra dignitatem*" to dle with the utilities of life, unless "high art," as it was called *par excellence*, d be imported wholesale into decoration and manufacture. Haydon, a cle painter, and a lecturer of singular power, one who did much to promote the pre popular taste for the fine arts in Britain, by his able exposition of principles, to per erted view of this question from the beginning. The early system pursued at Manchester was adopted at his suggestion, and he lived to see it fail most sig though he still adhered to his doctrine, that *if a student could draw and* [illegible] *man figure, he could draw and* [illegible] he [illegible] for example; for with wonderful power in the forme; he fail [illegible] he attempted any thing approaching to ornamentation in its best for s as applied to the utilities of life. Thus it became evident that teachers must b first educated before the public could be taught, and by Mr. Dyce's advice, a normal class was formed in 1841, in the Central School at Somerset House, and six exhibitions of £30 per annum each were offered to the six best students who were willing to devote their future professional attention to the schools as masters. The masters the provincial schools first established were selected from this class. It was soo discovered, however, that an unpaid and irresponsible body, like the council of the Metropolitan School, could not work a great and practical question like this with success. Out of twenty-four numbers, very few attended regularly, and the management fell into the hands of some two or three of the most energetic, whose personal predilections and crotchets rather than sound principles ruled the management. With Mr. Dyce's resignation in 1843, commenced a series of cha ges which ended last year in the consolidation of the whole management into a new department of the Board of Trade, now finally constituted as the Department of Practical Science and Art: Henry Cole, Esq., C. B., and Dr. Lyon P fair, C. B., F. R. S., being the responsible officers.

The radical defect of the system attempted subsequent to Mr. Dyce's ctorship, was an unmeaning centralization of power, and dictatorial tone a the system, or rather modes of applying the system of education, on which s were pretty well agreed, irrespective of the wants and peculiarities of the vario an-

factures and local requirements. Mr. Dyce's successor was Mr. C. H. Wilson now head-master of the Glasgow School), a gentleman possessing many of the requisites for the office, and whose long residence in Italy, and subsequent experience as a teacher in the Trustees' School at Edinburgh, gave him many advantages. Unfortunately, there appeared little fixity of principle in the modes in which the schools were henceforth to be conducted. Changes were made, or attempted to be made in the provincial schools, because they were supposed to be required by the circumstances of the head school, the success of which under repeated alterations was rather problematical. At length this spirit of dictation and unmeaning direction was resisted in one of the most important and successful schools, that of Manchester. The head-master, Mr. George Wallis,* remonstrated against impolitic changes in regard to the school over which he presided, and which had progressed in an unexampled manner during the two years he had managed it. Its success Mr. Wallis felt ought not to be endangered by alterations in the system of instruction, which had no real reference to the wants of the pupils, and which abnegated the necessity for teaching anatomy as the basis of drawing the human figure. The ground now taken was firmly kept, until, by the yielding of the Manchester committee, Mr. Wallis found he could not retain his post with honor to himself or advantage to his students, and he thereupon resigned his position in a somewhat indignant fashion; for he resorted to the very unofficial mode of informing the public of the whole circumstances of the case, defended his own views, stated why he resigned, and worst of all, foretold the results to the institution, and all others which were subjected to the same law of misrule. For three years subsequently, the Manchester School fell in usefulness and popularity, and but for a large increase in the government grant, must have become bankrupt. It was only on a recurrence of the former modes of management and principles of instruction, together with the appointment of the present head-master Mr. Hamersley, whose success at Nottingham pointed him out for promotion, and as the most likely man to redeem the important school of the cotton metropolis, that the classes rallied in numbers, and became once more successful, and this too in the face of a debt accumulated during the emasculating process, which changed a large balance at the bank into a considerable liability on the other side.

Nor was it long before the system, against which such "heavy blows and great discouragements" had been hurled from Manchester, began to shake at head quarters. Mr. Herbert, R. A., a most eminent artist and successful teacher of the figure, resigned his appointment, and indignantly repudiated the management. In the end, after some eighteen months of uncertainty and inquiry, the Council at Somerset House was abolished, and a Commissioner of the Board of Trade was appointed to superintend the general management of the schools, while three eminent artists were appointed to the entire direction of the educational department These were Mr. Herbert, R. A., Mr. Redgrave, R. A., and Mr. J. H. Townsend. Mr. Wilson, the late Director, took the superintendence and inspection of the Provincial Schools; but this arrangement existed only for a short period, and he was subsequently appointed Head Master at Glasgow, a post in which his talents were well fitted to secure him success.

It is now time to say something about the Female department of these schools. This had been first commenced in 1842 under the direction of Mrs. McIan, a lady whose pictures are an honor to her country, and whose devotion to her duties, and the success which has followed that devotion, notwithstanding the many difficulties in which she has been placed from time to time by the apathy, and often opposition of the management, deserve the highest consideration. This Fe [illegible] is intended to give instruction to females [illegible] industrial depart- [illegible] anxious to devote their time to the pursuits [illegible] ments of art, for which their sex might fit them without degradation. Drawing and engraving on wood, lithography, china painting, designing for lace, printed goods, silk, silver work, even to the modelling of the latter, were suitable branches of industry. Mrs. McIan visited Sevres and the Staffordshire Potteries, made herself practically conversant with the various methods of painting china, and this, too, as only one part of her duties. In fact, an intelligent and earnest mind was at work on a suitable subject, and success was the result, even under all the difficulties to which we have alluded. Of the present state of the Female School, we shall have occasion to speak hereafter.

The result of the utter want of systematic management in London re-acted upon the Branch Schools, and the extreme of a stereotyped course of study, without regard to the varied requirements of each manufacturing locality, resulte in another extreme, in which each master did what was right in his own ey , and most profitable or convenient for his own purposes. The abolition of the n l

* It may not be uninteresting to state, that Mr. Wallis, who has recently visited the United State a one of the Royal Commissioners from Great Britain, had advocated the cause of art-education for the ar long before his connection with the schools. His experience as head-master at Spitalfields, and his su there and at Manchester, gave his opinions great weight, though this was not felt at the time. T were made of more and more value by his untiring attention to the practical questions of art-manufact and his efforts as a writer and lecturer, from the period at which he threw up his post at Manchest until his unsolicited reappointment as head-master at Birmingham in 1851, after five years absence fr official duty.